The Enclosed Document Is Provided For Your Convenience.

Please Email ALL Questions:

MailTo:ContractAdministration@TampaGov.net

Please Let Us Know If You Plan To Bid

City of Tampa
Contract Administration Department
306 E. Jackson St. #280A4N
Tampa, FL 33602
(813)274-8456

CITY OF TAMPA

STRUCTURES PLANS

LAUREL STREET BRIDGE REPAIR
BRIDGE NO. 105503

CITY PROJECT NO. PW 4871

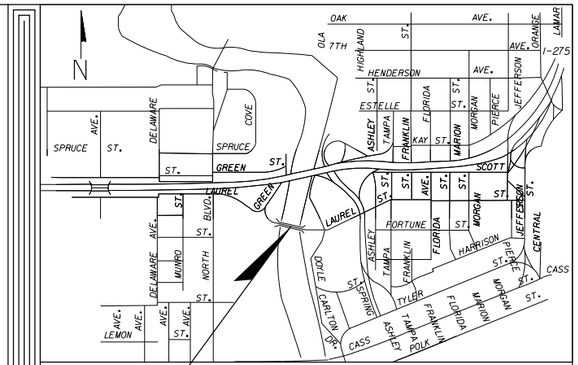

PROJECT LOCATION

VICINITY MAP

0 1000 2000 FT

INDEX OF DRAWINGS

1	KEY SHEET
2	SUMMARY OF PAY ITEMS
3	GENERAL NOTES (1 of 3)
4	GENERAL NOTES (2 OF 3)
5	GENERAL NOTES (3 OF 3)
6	PLAN AND ELEVATION
7	CLEANING AND PAINTING
8	STEEL REPAIRS (1 OF 4)
9	STEEL REPAIRS (2 OF 4)
10	STEEL REPAIRS (3 OF 4)
11	STEEL REPAIRS (4 OF 4)
12	CONCRETE RESTORATION
13	CONCRETE DEFICIENCIES
14	HANDRAIL REPAIR
15	MAINTENANCE OF TRAFFIC
BX-1 TO BX-53	EXISTING PLANS

COMPONENT PLANS UNDER SEPARATE COVER	SHEET NO.
LAUREL STREET BRIDGE BASCULE SPAN REPAIRS	B1-01 - B1-21
LAUREL STREET BRIDGE CONTROL HOUSE REPAIRS	AG-001 - AA601
LAUREL STREET BRIDGE LIGHTING REPLACEMENT	L-1 - S-4

LIST OF REVISED INDEX DRAWINGS

INDEX NO.	SHEET NO.

JANUARY 2015

DEPARTMENT OF TRANSPORTATION AND STORMWATER SERVICES

CITY OF TAMPA, FLORIDA

GOVERNING STANDARDS & SPECIFICATIONS:
FLORIDA DEPARTMENT OF TRANSPORTATION, 2015
DESIGN STANDARDS AND REVISED INDEX DRAWINGS
AS APPENDED HEREIN, AND 2015 STANDARD
SPECIFICATIONS FOR ROAD AND BRIDGE
CONSTRUCTION, AS AMENDED BY CONTRACT DOCUMENTS

FOR DESIGN STANDARDS CLICK ON THE "DESIGN STANDARDS"
LINK AT THE FOLLOWING WEB SITE:
http://www.dot.state.fl.us/rddesign/

FOR THE STANDARD SPECIFICATIONS FOR ROAD AND BRIDGE
CONSTRUCTION CLICK ON THE "SPECIFICATIONS" LINK
AT THE FOLLOWING WEBSITE:
http://www.dot.state.fl.us/specificationsoffice/

ATTENTION IS DIRECTED TO THE FACT THAT THESE PLANS HAVE
BEEN REDUCED IN SIZE BY REPRODUCTION. THIS MUST BE
CONSIDERED WHEN OBTAINING SCALED DATA

Kisinger Campo & Associates Corp.
One Tampa City Center
201 N. Franklin St., Suite 400
Tampa, Florida 33602
Florida Certificate of Authorization No 02317

APPROVED BY:

ALTAF BUKARI, P.E.
PROJECT ENGINEER
DEPARTMENT OF TRANSPORTATION AND STORMWATER SERVICES

CERTIFICATION

Sheet 1 to 14 Inclusive, Certified By:

DAVID B. THOMPSON, P.E.
P.E. No 45403

$$$$$$ PLOT STATION TEXT $$$$$$

REVISION: 0 10/1/14 DRH

LAUREL STREET BRIDGE REPAIR

ITEM NUMBER	ITEM DESCRIPTION	UNIT	QUANTITY
101- 1	MOBILIZATION	LS	1
102- 1	MAINTENANCE OF TRAFFIC	LS	1
104- 11	FLOATING TURBIDITY BARRIER	LF	1477
400-143	CLEANING AND COATING CONCRETE SURFACES, CLASS 5	SF	35000
401-70-4	RESTORE SPALLED AREAS, PORTLAND CEMENT GROUT	CF	140
411- 1	EPOXY MATERIAL FOR CRACK INJECTION	GA	25
411- 2	INJECT AND SEAL CRACKS	LF	150
415- 1- 6	REINFORCING STEEL, MISCELLANEOUS	LB	1296
460- 1- 5	STRUCTURAL STEEL REHAB, BASCULE LEAVES	LB	3885
460- 1- 15	STRUCTURAL STEEL REHAB, MISCELLANEOUS	LB	6009
460- 6- 2	LADDERS AND PLATFORMS, REHAB	LB	300
460- 81	RIVET/HIGH STRENGTH BOLT REPLACEMENT	EA	186
460- 95	STRUCTURAL STEEL REPAIR	LB	2137
515- 2-203	PEDESTRIAN/BICYCLE RAILING, STEEL, NON-STANDARD HEIGHT	LF	250
561- 1	COATING EXISTING STRUCTURAL STEEL	LS	1
999-25	INITIAL CONTINGENCY AMOUNT (DO NOT BID)	LS	1

LAUREL STREET BRIDGE CONTROL HOUSE REPAIRS

ITEM NUMBER	ITEM DESCRIPTION	UNIT	QUANTITY
SP-512	MOVABLE BRIDGE CONTROL HOUSE, RENOVATE	LS	1

LAUREL STREET BRIDGE LIGHTING REPLACEMENT

ITEM NUMBER	ITEM DESCRIPTION	UNIT	QUANTITY
SP-715	BRIDGE LIGHTING REPAIRS	LS	1

NOTES:

1. SEE COMPONENT PLANS FOR PAY ITEMS AND NOTES.
2. THE CITY OF TAMPA RESERVES THE RIGHT TO REMOVE ANY PORTION OF THE WORK.

BRIDGE NO. 105503

REVISIONS					
DATE	BY	DESCRIPTION	DATE	BY	DESCRIPTION

	NAMES	DATES
DRAWN BY	DMK	10/10
CHECKED BY	DBT	10/10
DESIGNED BY	PDM	10/10
CHECKED BY	DBT	10/10
APPROVED BY	D. B. THOMPSON	

ENGINEER OF RECORD:
Kisinger Campo and Associates Corp.
One Tampa City Center
201 N. Franklin St., Suite 400
TAMPA, FLORIDA 33602
FL Certificate of Authorization No. 02317
David B. Thompson, P.E. No. 45403

LOGO:

CITY OF TAMPA

SHEET TITLE: SUMMARY OF PAY ITEMS

PROJECT NAME: LAUREL STREET BRIDGE REPAIR

SHEET NO. 2

GENERAL SPECIFICATIONS:

FLORIDA DEPARTMENT OF TRANSPORTATION STANDARD SPECIFICATIONS FOR ROAD AND BRIDGE CONSTRUCTION (2015, AND APPROVED SUPPLEMENTAL SPECIFICATIONS).

DESIGN SPECIFICATIONS:

1. AMERICAN ASSOCIATION OF STATE HIGHWAY AND TRANSPORTATION OFFICIALS (AASHTO) LRFD BRIDGE DESIGN SPECIFICATIONS. (2012, 6TH EDITION) AND APPROVED INTERIMS AS SPECIFIED IN THE STRUCTURES DESIGN GUIDELINES.
2. AASHTO LRFD MOVABLE HIGHWAY BRIDGE DESIGN SPECIFICATIONS (2007 EDITION) INCLUDING THE CURRENT INTERIM REVISIONS.
3. FLORIDA DEPARTMENT OF TRANSPORTATION (FDOT) STRUCTURES DESIGN GUIDELINES (JANUARY 2015 EDITION).
4. MEMBERS REPLACED IN KIND SHALL CONFORM TO THE SPECIFICATIONS OF THE ORIGINAL DESIGN.

PRIMARY SCOPE OF WORK:

1. CONCRETE RESTORATION.
2. STEEL REPAIR.
3. CLEANING AND PAINTING.
4. HANDRAIL REPAIRS

DRAWINGS AND DIMENSIONS:

1. BRIDGE ELEMENT NUMBERING IS BASED FIRST ON THE DIRECTION OF STATIONING AND THEN ORIENTED FROM LEFT TO RIGHT. MAY NOT CORRESPOND TO NOMENCLATURE IN EXISTING PLANS.
2. DO NOT SCALE DRAWINGS FOR DIMENSIONS NOT GIVEN.
3. VERIFY ALL EXISTING FIELD CONDITIONS AND DIMENSIONS PRIOR TO COMMENCING REPAIRS OR ORDERING ANY MATERIALS. NOTIFY ENGINEER OF ANY DISCREPANCIES FOUND.

MATERIAL PRODUCTS:

1. EXCEPT FOR THOSE MATERIAL PRODUCTS SPECIFICALLY CALLED FOR IN THE PLANS AND SPECIFICATIONS, ALL MATERIAL PRODUCTS SPECIFIED FOR THIS PROJECT SHALL BE ON THE FDOT QUALIFIED PRODUCTS LIST.
2. MATERIALS MEETING THE REQUIREMENTS OF THE PLANS AND SPECIFICATIONS SHALL BE INSTALLED IN ACCORDANCE WITH APPROVED MANUFACTURER'S RECOMMENDATIONS.

CONCRETE REPAIR:

1. FOR REQUIREMENTS ON SURFACE PREPARATION, MIXING, PLACING, FINISHING, MATERIALS AND OTHER RELATED ITEMS, REFER TO THE SPECIFICATIONS FOR CONCRETE RESTORATION.
2. SHOULD CRACK OR SPALL REPAIR AREA BE SUBJECT TO SUBMERSION, CONTRACTOR TO SUBMIT FOR ENGINEER'S APPROVAL, CONSTRUCTION PLAN OR ALTERNATIVE REPAIR MATERIAL SUITABLE FOR UNDERWATER USAGE.

CONCRETE COVER:

CONCRETE COVER SHOWN IN THE PLANS DOES NOT INCLUDE PLACEMENT OR FABRICATION TOLERANCES UNLESS SHOWN AS "MINIMUM COVER." SEE FDOT SPECIFICATIONS FOR ALLOWABLE TOLERANCES.

CONCRETE FINISHES:

FINISH IN ACCORDANCE WITH THE SPECIFICATIONS UNLESS OTHERWISE NOTED.
PROVIDE ¾" CHAMFERS ON ALL EXPOSED EDGES UNLESS OTHERWISE NOTED.

REINFORCEMENT:

ALL REINFORCING STEEL SHALL CONFORM TO ASTM A615/A615M-01b, GRADE 60. ALLOWABLE TENSILE STRESS FOR GRADE 60 REINFORCEMENT IS 24,000 PSI.

UTILITIES:

1. NO UTILITY ADJUSTMENTS OR RELOCATION WORK IS ANTICIPATED. HOWEVER, THE CONTRACTOR SHALL BE RESPONSIBLE FOR LOCATING ALL UTILITIES PRIOR TO COMMENCING WITH CONSTRUCTION.
2. THE CONTRACTOR SHALL CONTACT SUNSHINE AT (800) 432-4770 AND ANY OTHER LOCAL UTILITIES TO VERIFY EXISTING UTILITIES AT SITE OF CONSTRUCTION.
3. UTILITIES SHALL BE PROTECTED DURING ALL PHASES OF CONSTRUCTION. IF ANY EXISTING UTILITIES CONFLICT WITH PROPOSED CONSTRUCTION METHODS, MATERIALS, OR EQUIPMENT, THE CONTRACTOR SHALL NOTIFY THE ENGINEER.
4. SPECIAL ATTENTION SHALL BE GIVEN TO NOT DAMAGE THE SUBMARINE CABLE ACROSS THE CHANNEL.

BRIDGE OPERATION

CONTACT THE CITY OF TAMPA AT (813) 323-8422 TO COORDINATE OPERATING AND MAINTENANCE RELATED ISSUES PRIOR TO CONSTRUCTION. THE CONTRACTOR WILL OPERATE AND MAINTAIN THE BRIDGE THROUGHOUT THE CONSTRUCTION DURATION.

POLLUTION CONTROL:

1. THE CONTRACTOR SHALL SUBMIT A POLLUTION CONTROL PLAN TO THE ENGINEER, IN ACCORDANCE WITH THE SPECIFICATIONS, FOR APPROVAL PRIOR TO COMMENCING ANY CONSTRUCTION ACTIVITIES.
2. THE CONTRACTOR SHALL NOT ALLOW, AT ANY TIME, ANY DISCHARGE OR MATERIALS TO FALL INTO THE WATER.
3. CONTRACTOR SHALL SUBMIT TO THE ENGINEER AN EROSION CONTROL PLAN (ECP) AS REQUIRED IN THE SPECIFICATIONS. THIS ECP SHALL INCLUDE THE AREA REQUIRED FOR STAGING OF EQUIPMENT AND MATERIAL.
4. AS A PRECAUTIONARY MEASURE, A TURBIDITY CONTAINMENT SYSTEM IS REQUIRED TO BE PLACED AROUND ALL WORK ZONES DURING CLEANING, PAINTING, AND CONCRETE RESTORATION. THE CONTRACTOR SHALL SUBMIT SHOP DRAWINGS OF THE TURBIDITY CONTAINMENT SYSTEM FOR APPROVAL BY THE ENGINEER PRIOR TO COMMENCING ANY OPERATIONS.

DATUM:

ALL ELEVATIONS REFER TO NGVD 1929 UNLESS OTHERWISE NOTED.

SITE CONDITIONS:

1. CONTRACTOR SHALL BE AWARE OF THE SITE CONDITIONS WITH REGARD TO WATER DEPTH. NATURAL HABITAT SHALL NOT BE DISTURBED.
2. CONTRACTOR SHALL MAINTAIN THE STABILITY OF THE STRUCTURE AT ALL TIMES DURING REPAIR PROCEDURES.
3. CONTRACTOR SHALL ISOLATE WORK SITES FROM PUBLIC ACCESS WITH BARRICADES, FENCING, OR OTHER MATERIALS AS APPROVED BY THE CITY.
4. CONTRACTOR SHALL PROVIDE SAFE ACCESS TO ALL WORK AREAS FOR INSPECTION PERSONNEL.
5. CONTRACTOR WILL BE ALLOWED TO TEMPORARILY TIE OFF BARGES, SCAFFOLDING AND EQUIPMENT TO THE STRUCTURE IN ACCORDANCE WITH THE SPECIFICATIONS. CONTRACTOR SHALL BE RESPONSIBLE FOR ANY DAMAGE INCURRED AS A RESULT OF THESE PROCEDURES.
6. EXISTING PLANS INCLUDED WITH PLANS SET ARE INCLUDED FOR REFERENCE ONLY (MODIFICATIONS TO THE STRUCTURE MAY HAVE OCCURRED THAT ARE NOT REFLECTED IN PLANS).

TRAFFIC CONTROL:

1. TRAFFIC SHALL BE MAINTAINED IN ACCORDANCE WITH FDOT DESIGN STANDARDS, INDEX 600 SERIES.
2. AN OFF DUTY LAW ENFORCEMENT OFFICER SHALL BE REQUIRED AS PART OF THE TRAFFIC CONTROL SETUP FOR ANY LANE CLOSURE OPERATIONS.
3. REFER TO SHEET 15 FOR ADDITIONAL INFORMATION.
4. CONTRACTOR SHALL NOT CLOSE LAUREL STREET BRIDGE WHEN KENNEDY BRIDGE IS CLOSED TO TRAFFIC DURING REPAIR WORK AND WHEN DETOUR IS SET UP. CONTRACTOR WILL BE RESPONSIBLE TO ADJUST HIS CONSTRUCTION ACTIVITIES WHICH ARE IN CONFLICT WITH CONSTRUCTION ACTIVITIES OR THE KENNEDY BRIDGE.

COAST GUARD:

1. CONTRACTOR SHALL NOTIFY SEVENTH DISTRICT COAST GUARD ADMINISTRATIVE OFFICE IN MIAMI, FLORIDA ((305) 415-6800) 60 DAYS PRIOR TO THE COMMENCEMENT OF CONSTRUCTION ACTIVITIES.
2. THE CONTRACTOR SHALL NOTIFY THE US COAST GUARD MARINE SAFETY OFFICE IN TAMPA ((813) 228-2189) 60 DAYS IN ADVANCE OF ACTIONS DURING BRIDGE CONSTRUCTION OR DEMOLITION THAT COULD POTENTIALLY AFFECT WATERWAY USERS AND PRIOR TO PLACEMENT OF ANY PAINT CONTAINMENT OR FLOATING CONSTRUCTION EQUIPMENT IN THE WATERWAY.

PERMITS:

THE CONTRACTOR SHALL BE RESPONSIBLE FOR OBTAINING ANY ADDITIONAL REQUIRED PERMITS PRIOR TO CONSTRUCTION.

MARINE TRAFFIC:

THE CONTRACTOR SHALL BE RESPONSIBLE FOR MAINTAINING ALL MARINE TRAFFIC THROUGHOUT CONSTRUCTION INCLUDING NAVIGATION LIGHTS AND SIGNS.

MARINE SAFETY:

THE CONTRACTOR SHALL PROVIDE A SAFETY BOAT TO ENSURE WORKER SAFETY OVER WATER.

STEEL REPAIRS:

1. IF ANY STRUCTURAL STEEL MEMBERS ARE FOUND TO BE DEFECTIVE AND IN NEED OF REPLACEMENT OR REPAIRS DURING THE CLEANING OPERATION, BEYOND THOSE NOTED IN THE PLANS, THE CONTRACTOR SHALL PROVIDE DETAILED SHOP DRAWINGS FOR THE REPAIR OF THE STRUCTURAL STEEL FOR THE ENGINEER'S APPROVAL, SIGNED AND SEALED BY A FLORIDA REGISTERED ENGINEER. THE ADDITIONAL REPAIRS WILL BE PAID UNDER PAY ITEM NO. 460-95, STRUCTURAL STEEL REPAIR (PER LB).
2. NO WELDING SHALL BE ALLOWED ON THE STRUCTURAL STEEL OTHER THAN THOSE WELDS SHOWN IN THE PLANS OR APPROVED BY THE ENGINEER.
3. REPAIR PLANS ARE BASED ON INFORMATION PROVIDED IN EXISTING PLANS. SHOULD INFORMATION SHOWN IN PLANS CONFLICT WITH FIELD MEASUREMENTS OR MATERIALS, CONTACT THE ENGINEER PRIOR TO ORDERING MATERIAL OR PROCEEDING WITH REPAIR.

BRIDGE NO. 105503

STRUCTURAL STEEL:

UNLESS MEMBER IS DESIGNATED OTHERWISE IN EXISTING PLANS AND REQUIRES HIGHER GRADE TO REPLACE IN KIND, ALL STRUCTURAL STEEL SHALL BE IN ACCORDANCE WITH ASTM A709, GRADE 36 (AASHTO DESIGNATION M270, GRADE 361). MAXIMUM ULTIMATE DESIGN STRESSES ARE AS FOLLOWS:

GRADE 36
TENSION 36,000 PSI
SHEAR 21,000 PSI

CHARPY V-NOTCH:

ALL ASTM A709 STRUCTURAL STEEL AS DESIGNATED ON THE PLANS SHALL RECEIVE CHARPY V-NOTCH TESTING IN ACCORDANCE WITH ASTM A709. ALL OTHER STRUCTURAL STEEL SHALL MEET THE CHARPY V-NOTCH TEST REQUIREMENTS SPECIFIED IN SPECIFICATIONS SECTION 962.

STEEL FABRICATION:

ALL STRUCTURAL STEEL SHALL BE ASTM A709. FABRICATION SHALL BE PERFORMED IN ACCORDANCE WITH THE CURRENT APPLICABLE EDITION OF THE AASHTO/AWS D1.5 BRIDGE WELDING CODE. FABRICATORS OF STRUCTURAL STEEL SHALL HAVE THE AISC QUALITY CERTIFICATION FOR MAJOR STEEL BRIDGES AND AISC FRACTURE CRITICAL MEMBERS ENDORSEMENT.

WELDING:

1. WELDING DETAILS AND OPERATIONS SHALL BE IN ACCORDANCE WITH THE CURRENT EDITION OF THE AASHTO/AWS D1.5 BRIDGE WELDING CODE. WELDING PROCEDURES SHALL BE SUBMITTED AND APPROVED PRIOR TO WELDING ON THE PROJECT. WELDS REQUIRING NON-DESTRUCTIVE TESTING SHALL BE RADIOGRAPHICALLY INSPECTED, EXCEPT WHERE THE GEOMETRY OF THE REGION OF THE WELD WILL NOT PERMIT SATISFACTORY INFORMATION TO BE SECURED FOR VERIFICATION OF THE WELD QUALITY. WHEN SUCH GEOMETRICAL CONDITIONS EXIST, OTHER INSPECTION PROCEDURES OR COMBINATIONS OF PROCEDURES SUCH AS ULTRASONIC INSPECTION, DYE PENETRANT INSPECTION AND/OR MAGNETIC PARTICLE INSPECTION, SHALL BE USED. NON-DESTRUCTIVE TESTING SHALL BE PERFORMED AS REQUIRED BY THE CURRENT EDITION OF THE AASHTO/AWS D1.5 BRIDGE WELDING CODE.
2. FIELD WELDING TO ANY STRUCTURAL STEEL FOR THE PURPOSE OF ATTACHING ERECTION HARDWARE SHALL NOT BE PERMITTED, UNLESS OTHERWISE SHOWN. SHEAR CONNECTOR INSTALLATION IS GOVERNED BY OSHA STEEL ERECTION RULE.
3. THE FOLLOWING MEMBERS ARE CLASSIFIED AS ANCILLARY MEMBERS IN ACCORDANCE WITH THE CURRENT EDITION OF THE AWS D1.5 BRIDGE WELDING CODE:
   A. EXPANSION JOINT WELDS
   B. DRAINAGE SYSTEM WELDS

FIELD CONNECTIONS:

1. ALL CONNECTIONS SHALL BE MADE WITH 7/8" DIAMETER HIGH STRENGTH SLIP CRITICAL TYPE 1 BOLTS IN ACCORDANCE WITH ASTM A325 UNLESS OTHERWISE SHOWN. BEVELED PLATE WASHERS SHALL BE UTILIZED AT TAPERED FLANGE SURFACES. BOLTS AND THEIR COMPATIBLE NUTS AND WASHERS SHALL BE MECHANICALLY GALVANIZED IN ACCORDANCE WITH ASTM B695, CLASS 50. THE NUTS SHALL BE OVERTAPPED TO THE MINIMUM AMOUNT REQUIRED FOR THE FASTENER ASSEMBLY AND SHALL BE LUBRICATED WITH A LUBRICANT CONTAINING A VISIBLE DYE SO A VISUAL CHECK CAN BE MADE FOR THE LUBRICANT AT THE TIME OF INSTALLATION.
2. NO EXISTING RIVETS, BOLTS, WASHERS, OR NUTS SHALL BE REUSED. NEW A325 BOLTS INSTALLED IN PRIOR PHASE WORK MAY BE TEMPORARILY REMOVED IN A SUBSEQUENT PHASE, THEN REINSTALLED AT THE SAME LOCATION.
3. NEW BOLTS SHALL BE TENSIONED PER SECTION 460 OF THE FDOT STANDARD SPECIFICATIONS.
4. NEW STEEL ELEMENTS SHALL BE FABRICATED WITH BOLT HOLES, TO BE SHOP OR FIELD DRILLED AS DETAILED IN THE CONTRACTOR'S REQUIRED SUBMITTAL OF SHOP DRAWINGS FOR THE REPAIRS. DO NOT FABRICATE NEW STEEL ELEMENTS UNTIL THE REQUIRED SHOP DRAWINGS ARE APPROVED BY THE ENGINEER.

CONSTRUCTION OPERATIONS:

DUE TO THE TIME LAPSE SINCE THE LAST INSPECTION AND THE LIMITED FIELD REVIEW, THERE IS A POSSIBILITY SOME REPAIR LOCATIONS CALLED OUT IN THE PLANS HAVE BEEN PREVIOUSLY REPAIRED. THE CONTRACTOR SHALL NOTIFY THE ENGINEER OF ANY OF THESE LOCATIONS FOR REPAIR VERIFICATION. IF THE REPAIR IS NOT ADEQUATE THE CONTRACTOR SHALL REPAIR THE AREA IN ACCORDANCE WITH THE ENGINEER'S INSTRUCTIONS.

ASBESTOS SURVEY:

THE FOLLOWING INFORMATION IS PROVIDED FROM AN ASBESTOS SURVEY COMPLETED BY APOLLO ENVIRONMENTAL, INC. IN DECEMBER 2006 AS WELL AS AN EMERGENCY REPAIR CONDUCTED IN 2014. A COPY OF THE REPORT WILL BE ONSITE DURING CONSTRUCTION ACTIVITIES. THE AREAS IN THE REPORT DESIGNATED AS CONTAINING ASBESTOS WHICH HAVE NOT BEEN REMOVED BY THE 2014 REPAIR (SUMMARIZED IN THE TABLE BELOW) SHALL NOT BE DISTURBED BY ANY CONSTRUCTION PROCEDURES. IF OTHER SUSPECTED MATERIALS ARE FOUND THAT WERE NOT INCLUDED IN THE REPORT, ANALYSIS OF MATERIALS WILL BE REQUIRED BY THE CITY PRIOR TO ITS DISTURBANCE.

ASBESTOS CONTAINING MATERIALS SUMMARY TABLE		
BETWEEN SHEET METAL LAYERS OF BRIDGE ELECTRIC LOCK MECHANICAL BOX ON NORTH UNDERSIDE OF BRIDGE AND MANUAL LOCK BOX	TAR PAPER GASKETS (ACM)	180 SF

PAINTING NOTES:

SAMPLES OF THE BRIDGE WERE TESTED FOR LEAD CONTENT. THE FOLLOWING RESULTS ARE PROVIDED FOR INFORMATION ONLY:

LEAD PAINT SUMMARY TABLE	
LOCATION	LEAD (Pb) PPM
NORTHSIDE ANGLED SUPPORT I-BEAM	50
NORTHSIDE SIDEWALK GRATE	37,000

SEE FULL LEAD BASED COATINGS REPORT FOR MORE INFORMATION.

PAY ITEM NOTES:

1. PAYMENT FOR INCIDENTAL ITEMS NOT SPECIFICALLY COVERED IN THE INDIVIDUAL BID ITEMS SHALL BE INCLUDED IN THE CONTRACT UNIT PRICE FOR BID ITEMS CONTAINED IN THIS CONTRACT.
2. THE QUANTITY OF THE FLOATING TURBIDITY CONTAINMENT SYSTEM IS BASED UPON ENCIRCLING THE ACTIVE WORK ZONES. PAYMENT FOR THE FLOATING TURBIDITY CONTAINMENT SYSTEM WILL BE PAID UNDER PAY ITEM 104-11, FLOATING TURBIDITY BARRIERS.
3. DAMAGED BARS OR BARS WHICH ARE DETERMINED TO BE UNSATISFACTORY BY THE ENGINEER SHALL BE REPLACED. THE COST OF EPOXY AND INSTALLING DOWELS, WHICH ARE SPECIFIED IN THESE PLANS AND INCLUDED IN THE REINFORCING BAR LIST, SHALL BE INCLUDED IN THE CONTRACT UNIT PRICE FOR REINFORCING STEEL (MISC), PAY ITEM NO. 415-1-6.
4. THE COST OF FURNISHING AND INSTALLING THE MANATEE SIGNS SHALL BE INCLUDED IN PAY ITEM 101-1, MOBILIZATION.
5. THE COST OF GALVANIZING SHALL BE INCIDENTAL TO THE ITEM BEING COATED.
6. PAY ITEM 460-1-5, STRUCTURAL STEEL REHAB (BASCULE LEAVES), AND PAY ITEM 460-1-15, STRUCTURAL STEEL REHAB (MISCELLANEOUS) APPLY TO THE BASCULE SPAN REPAIRS COMPONENT SET. SEE SHEET B1-01.
7. ALL COSTS ASSOCIATED WITH PAY ITEMS 101-1, MOBILIZATION; 102-1, MAINTENANCE OF TRAFFIC; AND 999-25, INITIAL CONTINGENCY AMOUNT TO COMPLETE THE WORK INCLUDED IN THE LIGHTING REPLACEMENT COMPONENT SET SHALL BE INCLUDED IN THE TOTAL LUMP SUM COST OF LIGHTING REPLACEMENT COMPONENT SET.
8. ALL COSTS ASSOCIATED WITH PAY ITEMS 101-1, MOBILIZATION; 102-1, MAINTENANCE OF TRAFFIC; AND 999-25, INITIAL CONTINGENCY AMOUNT TO COMPLETE THE WORK INCLUDED IN THE CONTROL HOUSE REPAIRS COMPONENT SET SHALL BE INCLUDED IN THE TOTAL LUMP SUM COST OF CONTROL HOUSE REPAIRS COMPONENT SET.
9. ALL COSTS ASSOCIATED WITH LEAD ABATEMENT SHALL BE PAID FOR UNDER PAY ITEM 561-1, COATING EXISTING STRUCTURAL STEEL, LS.

BRIDGE NO. 105503

SPECIAL MANATEE PROTECTION CONDITIONS:

MANATEES MAY BE PRESENT IN THE AREA. THE CONTRACTOR SHALL COMPLY WITH THE FLORIDA FISH AND WILDLIFE CONSERVATION COMMISSION'S STANDARD MANATEE PROTECTION CONSTRUCTION CONDITIONS FOR IN-WATER WORK:

A. ALL PERSONNEL ASSOCIATED WITH THE PROJECT SHALL BE INSTRUCTED ABOUT THE PRESENCE OF MANATEES AND MANATEE SPEED ZONES, AND THE NEED TO AVOID COLLISIONS WITH AND INJURY TO MANATEES. THE PERMITTEE SHALL ADVISE ALL CONSTRUCTION PERSONNEL THAT THERE ARE CIVIL AND CRIMINAL PENALTIES FOR HARMING, HARASSING, OR KILLING MANATEES WHICH ARE PROTECTED UNDER THE MARINE MAMMAL PROTECTION ACT, THE ENDANGERED SPECIES ACT, AND THE FLORIDA MANATEE SANCTUARY ACT.

B. ALL VESSELS ASSOCIATED WITH THE CONSTRUCTION PROJECT SHALL OPERATE AT "IDLE SPEED/NO WAKE" AT ALL TIMES WHILE IN THE IMMEDIATE AREA AND WHILE IN WATER WHERE THE DRAFT OF THE VESSEL PROVIDES LESS THAN A FOUR-FOOT CLEARANCE FROM THE BOTTOM. ALL VESSELS WILL FOLLOW ROUTES OF DEEP WATER WHENEVER POSSIBLE.

C. SILTATION OR TURBIDITY BARRIERS SHALL BE MADE OF MATERIAL IN WHICH MANATEES CANNOT BECOME ENTANGLED, SHALL BE PROPERLY SECURED, AND SHALL BE REGULARLY MONITORED TO AVOID MANATEE ENTANGLEMENT OR ENTRAPMENT. BARRIERS MUST NOT IMPEDE MANATEE MOVEMENT.

D. ALL ON-SITE PROJECT PERSONNEL ARE RESPONSIBLE FOR OBSERVING WATER-RELATED ACTIVITES FOR THE PRESENCE OF MANATEE(S). ALL IN-WATER OPERATIONS, INCLUDING VESSELS, MUST BE SHUTDOWN IF A MANATEE(S) COMES WITHIN 50 FEET OF THE OPERATION. ACTIVITIES WILL NOT RESUME UNTIL THE MANATEE(S) HAS MOVED BEYOND THE 50-FOOT RADIUS OF THE PROJECT OPERATION, OR UNTIL 30 MINUTES ELAPSES IF THE MANATEE(S) HAS NOT REAPPEARED WITHIN 50 FEET OF THE OPERATION. ANIMALS MUST NOT BE HERDED AWAY OR HARASSED INTO LEAVING.

E. ANY COLLISION WITH OR INJURY TO A MANATEE SHALL BE REPORTED IMMEDIATELY TO THE FWC HOTLINE AT 1-888-404-FWCC. COLLISION AND/OR INJURY SHOULD ALSO BE REPORTED TO THE U.S. FISH AND WILDLIFE SERVICE IN JACKSONVILLE (1-904-232-2580) FOR NORTH FLORIDA OR VERO BEACH (1-561-562-3909) FOR SOUTH FLORIDA.

F. TEMPORARY SIGNS CONCERNING MANATEES SHALL BE POSTED PRIOR TO AND DURING ALL IN-WATER PROJECT ACTIVITIES. ALL SIGNS ARE TO BE REMOVED BY THE PERMITTEE UPON COMPLETION OF THE PROJECT. AWARENESS SIGNS THAT HAVE ALREADY BEEN APPROVED FOR THIS USE BY THE FLORIDA FISH AND WILDLIFE CONSERVATION COMMISSION (FWC) MUST BE USED. ONE SIGN MEASURING AT LEAST 3 FT. BY 4 FT. WHICH READS CAUTION: MANATEE AREA MUST BE POSTED. A SECOND SIGN MEASURING AT LEAST 8 ½" BY 11" EXPLANING THE REQUIREMENTS FOR "IDLE SPEED/NO WAKE" AND THE SHUT DOWN OF IN-WATER OPERATIONS MUST BE POSTED IN A LOCATION PROMINENTLY VISIBLE TO ALL PERSONNEL ENGAGED IN WATER RELATED ACTIVITIES.

G. FOR ADDITIONAL INFORMATION, SEE www.dot.state.fl.us/specificationsoffice/implemented/URLinSpecs/files/endangeredwildlifeguidelines.pdf ALL SIGNS ARE TO BE REMOVED BY THE CONTRACTOR UPON COMPLETION OF THE PROJECT.

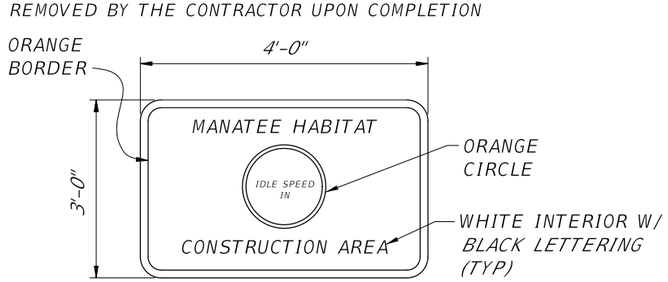

SPECAIL SEA TURTLE AND SMALLTOOTH SAWFISH CONDITIONS:

1. ALL PERSONNEL ASSOCIATED WITH THE PROJECT SHALL BE INSTRUCTED OF THE POTENTIAL PRESENCE OF THESE SPECIES AND THE NEED TO AVOID COLLISIONS WITH SEA TURTLES AND SMALLTOOTH SAWFISH. ALL CONSTRUCTION PERSONNEL ARE RESPONSIBLE FOR OBSERVING WATER-RELATED ACTIVITIES FOR THE PRESENCE OF THESE SPECIES.
2. ADVISE ALL CONSTRUCTION PERSONNEL THAT THERE ARE CIVIL AND CRIMINAL PENALTIES FOR HARMING, HARASSING, OR KILLING SEA TURTLES OR SMALLTOOTH SAWFISH, WHICH ARE PROTECTED UNDER THE ENDANGERED SPECIES ACT OF 1973.
3. SILTATION BARRIERS SHALL BE MADE OF MATERIAL IN WHICH A SEA TURTLE OR SMALLTOOTH SAWFISH CANNOT BECOME ENTANGLED, BE PROPERLY SECURED, AND BE REGULARLY MONITORED TO AVOID PROTECTED SPECIES ENTRAPMENT. BARRIERS MAY NOT BLOCK SEA TURTLE OR SMALLTOOTH SAWFISH ENTRY TO OR EXIT FROM DESIGNATED CRITICAL HABITAT WITHOUT PRIOR AGREEMENT FROM THE NATIONAL MARINE FISHERIES SERVICE'S PROTECTED RESOURCES DIVISION, ST. PETERSBURG, FLORIDA.
4. ALL VESSELS ASSOCIATED WITH THE CONSTRUCTION PROJECT SHALL OPERATE AT "NO WAKE/IDLE" SPEEDS AT ALL TIMES WHILE IN THE CONSTRUCTION AREA AND WHILE WATER DEPTHS WHERE DRAFT OR VESSEL PROVIDES LESS THAN A FOUR FOOT CLEARANCE FROM THE BOTTOM. ALL VESSELS WILL PREFERENTIALLY FOLLOW DEEP-WATER ROUTES (E.G., MARKED CHANNELS) WHENEVER POSSIBLE.
5. IF A SEA TURTLE OR SMALLTOOTH SAWFISH IS SEEN WITHIN 100 YARDS OF THE ACTIVE DAILY CONSTRUCTION/DREDGING OPERATION OR VESSEL MOVEMENT, ALL APPROPRIATE PRECAUTIONS SHALL BE IMPLEMENTED TO ENSURE ITS PROTECTION. THESE PRECAUTIONS INCLUDE CESSATION OF OPERATION OF ANY MOVING EQUIPMENT CLOSER THAN 50 FEET OF A SEA TURTLE OR SMALLTOOTH SAWFISH. OPERATION OF ANY MECHANICAL CONSTRUCTION EQUIPMENT SHALL CEASE IMMEDIATELY IF A SEA TURTLE OR SMALLTOOTH SAWFISH IS SEEN WITHIN A 50 FEET RADIUS OF THE EQUIPMENT. ACTIVITIES MAY NOT RESUME UNTIL THE PROTECTED SPECIES HAS DEPARTED THE PROJECT AREA OF ITS OWN VOLITION.
6. ANY COLLISION WITH AND/OR INJURY TO A SEA TURTLE OR SMALLTOOTH SAWFISH SHALL BE REPORTED IMMEDIATELY TO THE NATIONAL MARINE FISHERIES SERVICE'S PROTECTED RESOURCES DIVISION (727-824-5312) AND THE LOCAL AUTHORIZED SEA TURTLE STRANDING/RESCUE ORGANIZATION.
7. ANY SPECIAL CONSTRUCTION CONDITIONS, REQUIRED OF THE PROJECT, OUTSIDE THESE GENERAL CONDITIONS WILL BE ADDRESSED IN THE PRIMARY CONSULTATION.

SPECAIL EVENTS:

PER FDOT SPECIFICATION 8-6.4, SUSPENSION OF CONTRACTOR'S OPERATIONS - HOLIDAYS AND SPECIAL EVENTS, SPECIAL EVENT DAYS WHEN THE BRIDGE SHALL REMAIN OPEN FOR THIS PROJECT INCLUDE, BUT ARE NOT LIMITED TO:

1. THE GASPARILLA PARADE
2. THE GASPARILLA CHILDREN'S PARADE
3. THE GASPARILLA ART FESTIVAL
4. THE GASPARILLA MUSIC FESTIVAL
5. THE GASPARILLA DISTANCE CLASSIC WEEKEND
6. THE GASPARILLA INTERNATIONAL FILM FESTIVAL

CAUTION: MANATEE HABITAT

all project vessels
IDLE SPEED / NO WAKE

When a manatee is within 50 feet of work
all in-water activities must
SHUT DOWN

report any collision or injury to:
1-888-404-FWCC (1-888-404-3922)

Florida Fish and Wildlife Conservation Commission

BRIDGE NO. 105503

REVISIONS

DATE	BY	DESCRIPTION	DATE	BY	DESCRIPTION

	NAMES	DATES
DRAWN BY	DMK	10/10
CHECKED BY	DBT	10/10
DESIGNED BY	PDM	10/10
CHECKED BY	DBT	10/10
APPROVED BY	D. B. THOMPSON	

ENGINEER OF RECORD:
Kisinger Campo and Associates Corp.
One Tampa City Center
201 N. Franklin St., Suite 400
TAMPA, FLORIDA 33602
FL Certificate of Authorization No. 02317
David B. Thompson, P.E. No. 45403

LOGO:

CITY OF TAMPA

SHEET TITLE: GENERAL NOTES (3 OF 3)

PROJECT NAME: LAUREL STREET BRIDGE REPAIR

SHEET NO. 5

REVISION: 0 10/1/14 DRH

$$$$$$ PLOT STATION TEXT $$$$$$

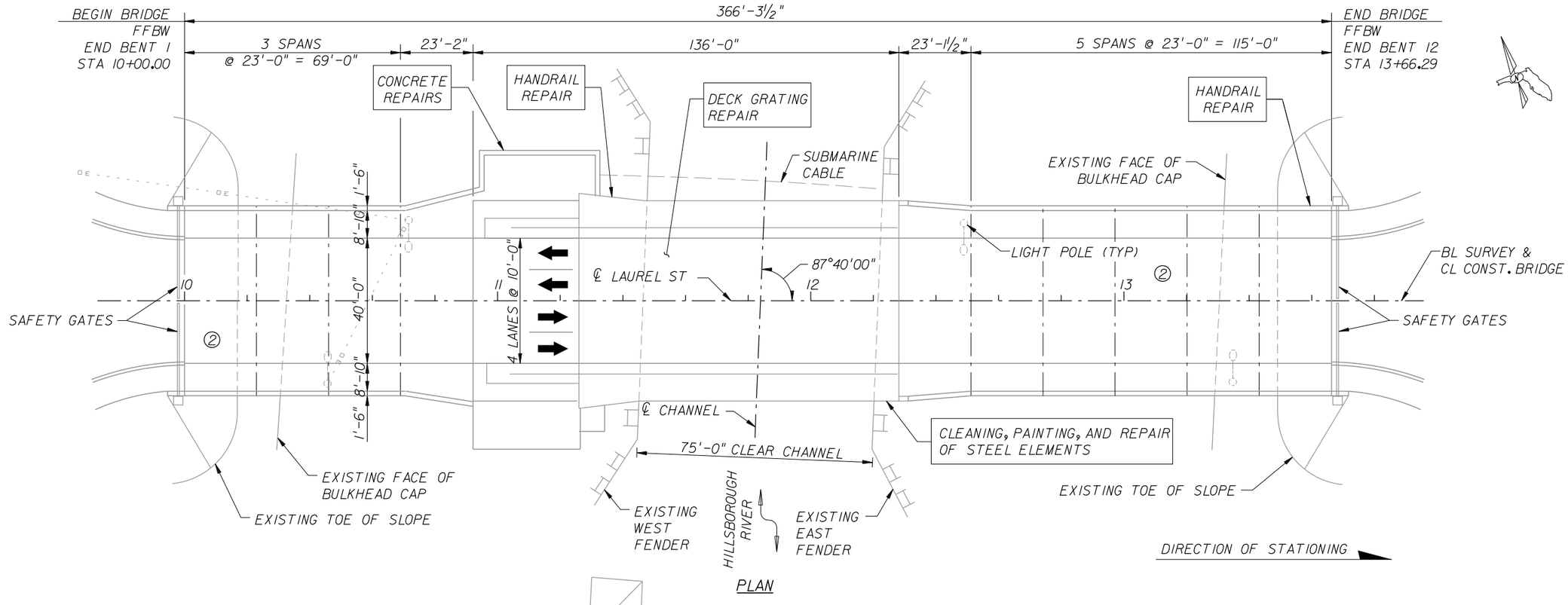

PLAN

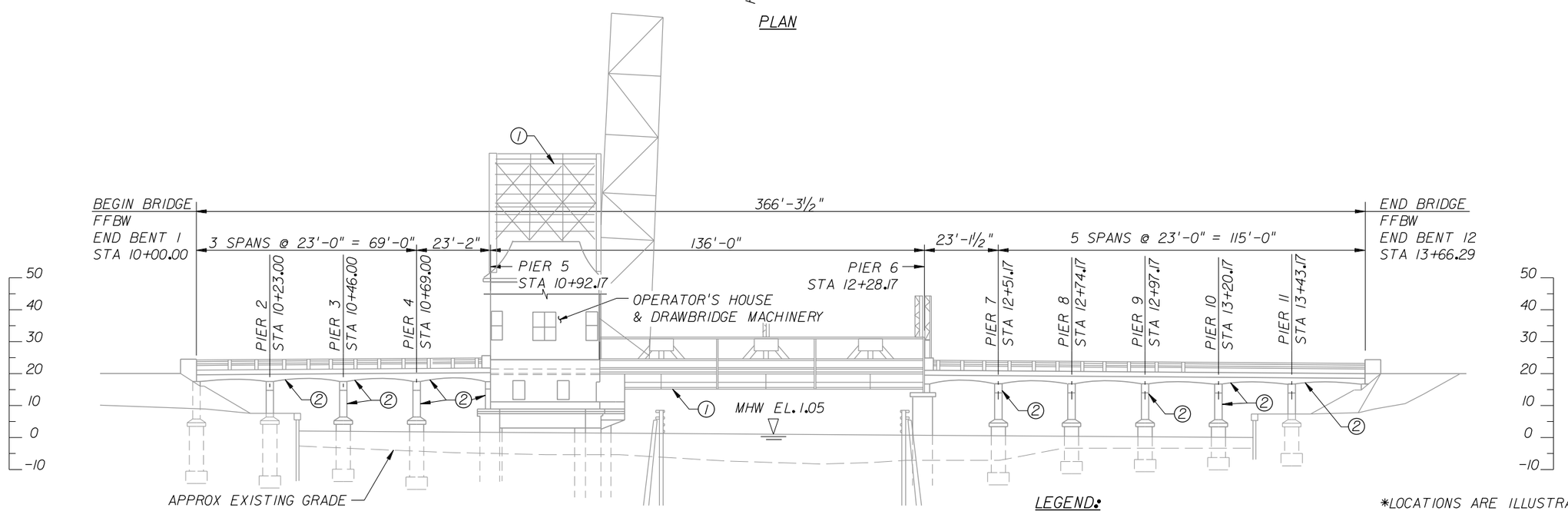

ELEVATION

LEGEND:

1. RIVET REPLACEMENT LOCATIONS*
2. CONCRETE REPAIR LOCATIONS*

*LOCATIONS ARE ILLUSTRATIVE AND ONLY SHOW TYPICAL AREAS OF REPAIRS. THEY DO NOT SHOW ALL AREAS.

BRIDGE NO. 105503

REVISIONS

DATE	BY	DESCRIPTION	DATE	BY	DESCRIPTION

	NAMES	DATES
DRAWN BY	DMK	10/10
CHECKED BY	DBT	10/10
DESIGNED BY	PDM	10/10
CHECKED BY	DBT	10/10
APPROVED BY	D. B. THOMPSON	

ENGINEER OF RECORD:
Kisinger Campo and Associates Corp.
One Tampa City Center
201 N. Franklin St., Suite 400
TAMPA, FLORIDA 33602
FL Certificate of Authorization No. 02317
David B. Thompson, P.E. No. 45403

LOGO:

CITY OF TAMPA

SHEET TITLE: PLAN AND ELEVATION

PROJECT NAME: LAUREL STREET BRIDGE REPAIR

SHEET NO. 6

REVISION: 0 10/1/14 DRH

$$$$$$ PLOT STATION TEXT $$$$$$

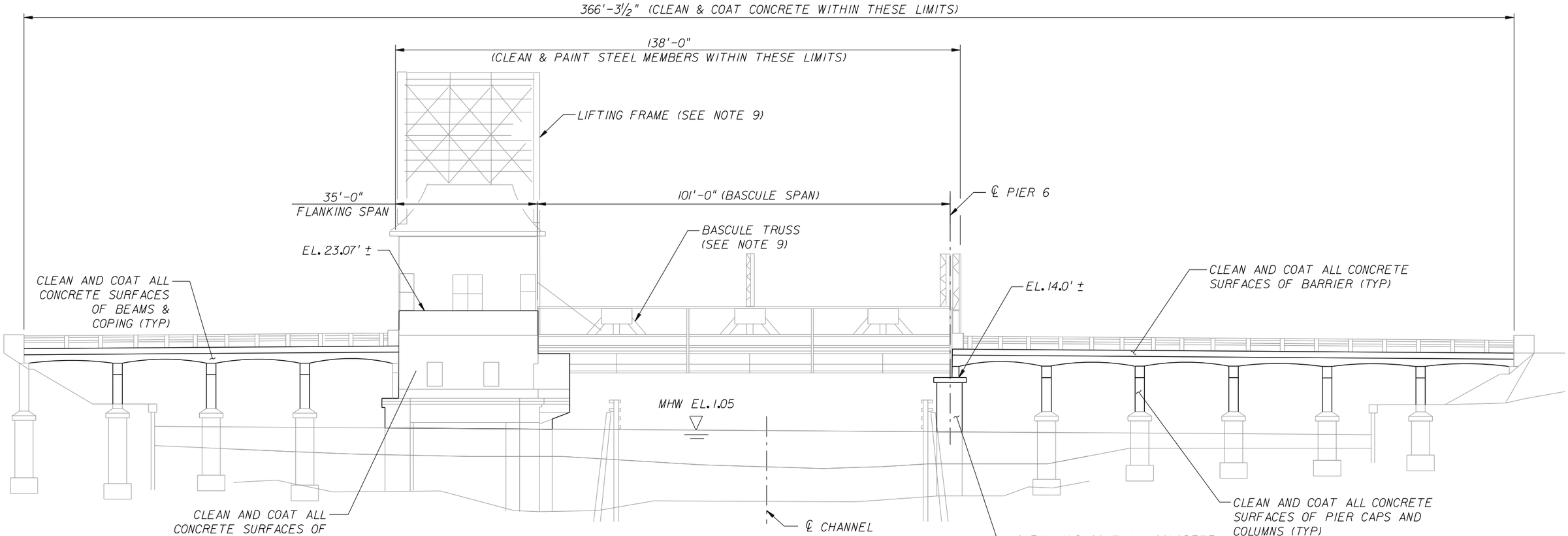

PARTIAL ELEVATION

CLEAN AND PAINT STEEL WITHIN LIMITS SHOWN

STEEL PAINTING NOTES:

1. PAINTING TO INCLUDE STEEL (INCLUDING LADDERS, TOWER, PLATFORMS, ETC.) ADJACENT TO AND WITHIN THE STEEL SPANS (BASCULE AND FLANKING). PAINT ALL STRUCTURAL STEEL IN MACHINERY ROOM AND OPERATOR HOUSE AS WELL. STRUCTURAL STEEL COATING SYSTEM SHALL BE ON THE FDOT APPROVED PRODUCT LIST. IN AREAS CURRENTLY INTACT (TEST 5 LOCATIONS TO CONFIRM ADHESION CAPABILITY), PRESSURE CLEAN, THEN INSTALL APPROVED SYSTEM (AFTER 2 SAMPLES OF GENERIC RESIN TEST FOR COMPATIBILITY). CONTRACTOR TO VISIT SITE PRIOR TO BID.
2. DO NOT PAINT THE STEEL FLOOR GRATING.
3. CLEANING AND PAINTING SHALL CONFORM TO SECTION 560, 561, AND 975 OF THE SPECIFICATIONS (MAINTENANCE PAINTING OF STRUCTURAL STEEL).
4. REFER TO EXISTING BRIDGE PLANS FOR ADDITIONAL INFORMATION REGARDING FRAMING PLAN, STRUCTURAL STEEL DETAILS, AND STEEL BEARING ASSEMBLY DETAILS.
5. THE BRIDGE MAY CONTAIN LEAD BASED PAINT. EXISTING PAINT TO BE REMOVED AND DISPOSED OF IN ACCORDANCE WITH THE SPECIFICATIONS.
6. CONTRACTOR TO SUBMIT POLLUTION CONTROL PLAN TO BE APPROVED BY THE ENGINEER. THE CONTRACTOR SHALL BE RESPONSIBLE FOR CLEANING STATIONS AND OVERSPRAY CONTAINMENT. CONTAINMENT METHODS TO BE IN ACCORDANCE WITH THE SPECIFICATIONS.
7. THE COST OF REMOVING THE EXISTING PAINT AND PAINTING THE STRUCTURE AS DESCRIBED ON THIS SHEET AND IN THE SPECIFICATIONS SHALL BE PAID FOR UNDER PAY ITEM 561-1, COATING EXISTING STRUCTURAL STEEL, LUMP SUM, AND SHALL INCLUDE THE REMOVAL AND DISPOSAL OF HAZARDOUS MATERIALS.
8. PAINT COLOR SHALL BE SHERWIN WILLIAMS "ANSI #70 GRAY" 4000 SERIES, OR APPROVED SIMILAR. VERIFY COLOR WITH CITY PRIOR TO ORDERING.
9. SEE SHEETS BX-12 & BX-13 FOR BASCULE TRUSS DETAILS AND SHEETS BX-20 & BX-21 FOR LIFTING FRAME DETAILS.

WORK IDENTIFICATION:

CLEAN AND COAT CONCRETE WITHIN LIMITS SHOWN

CONCRETE COATING NOTES:

1. COATING TO INCLUDE ENDS AND SIDE ELEVATIONS OF BASCULE PIER AND PIER 6, ALL PIER COLUMNS, DECK UNDERSIDE, BEAMS, COPING, AND BARRIER, IN ACCORDANCE WITH THE SPECIFICATIONS AND SPECIFIC PROVISIONS.
2. CLEAN IN ACCORDANCE WITH SECTION 400-19 OF THE SPECIFICATIONS. COATING SHALL BE ANTI-GRAFFITI SACRIFICIAL FINISH COAT IN ACCORDANCE WITH SECTION 975-7 OF THE SPECIFICATIONS.
3. CONTRACTOR TO SUBMIT POLLUTION CONTROL PLAN TO BE APROVED BY THE ENGINEER. CONTAINMENT METHODS TO BE IN ACCORDANCE WITH THE SPECIFICATIONS.
4. MATCH EXISTING COLOR OF BRIDGE AND COORDINATE WITH CITY OF TAMPA TO CONFIRM CORRECT COLORS FOR BRIDGE PAINT.
5. THE COST OF ALL WORK ASSOCIATED WITH CLEANING AND COATING CONCRETE TO BE PAID FOR UNDER PAY ITEM 400-143, CLEANING AND COATING CONCRETE SURFACES. ESTIMATED QUANTITY FOR BIDDING PURPOSES = 35,000 SF.

BRIDGE NO. 105503

REVISIONS

DATE	BY	DESCRIPTION	DATE	BY	DESCRIPTION

	NAMES	DATES
DRAWN BY	DMK	10/10
CHECKED BY	DBT	10/10
DESIGNED BY	PDM	10/10
CHECKED BY	DBT	10/10
APPROVED BY	D. B. THOMPSON	

ENGINEER OF RECORD:
Kisinger Campo and Associates Corp.
One Tampa City Center
201 N. Franklin St., Suite 400
TAMPA, FLORIDA 33602
FL Certificate of Authorization No. 02317
David B. Thompson, P.E. No. 45403

LOGO:

CITY OF TAMPA

SHEET TITLE: CLEANING AND PAINTING

PROJECT NAME: LAUREL STREET BRIDGE REPAIR

SHEET NO. 7

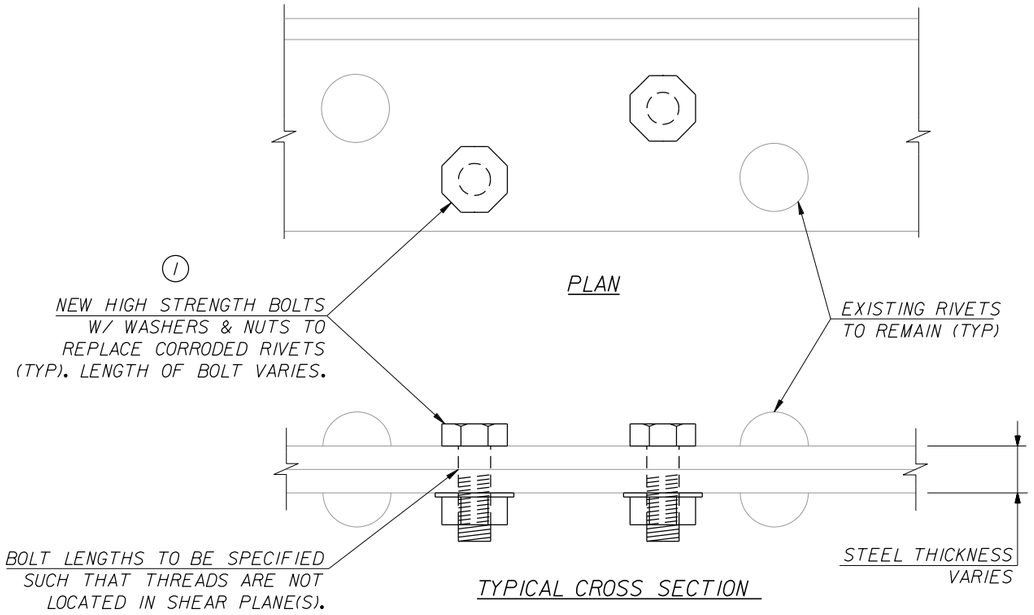

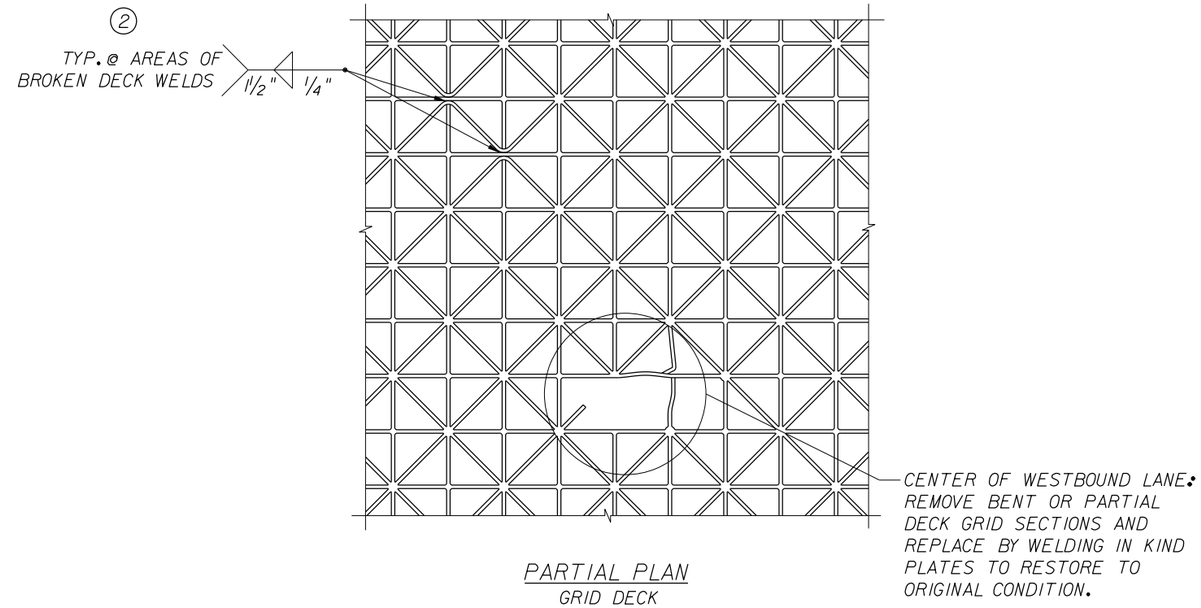

PARTIAL PLAN
GRID DECK

1 REPAIR LOCATIONS:

LOCATIONS INCLUDE BUT MAY NOT BE LIMITED TO: TOP FLANGE TIE PLATES FOR STRINGERS 1 AND 10 OF FLOOR BEAM 5-1 AND STRINGERS 1 THROUGH 10 AT FLOOR BEAM 5-7; FLOOR BEAM 5-7 TOP FLANGE BETWEEN STRINGERS 1 AND 6; COUNTERWEIGHT SUPPORT TOWERS; LINK FRAME HORIZONTAL GUSSETS. ADD HIGH STRENGTH BOLTS TO THE TOP FLANGE TIE PLATES FOR STRINGERS 1 THRU 10 AT FLOOR BEAMS 5-7 AND STRINGERS 1 AND 10 AT FLOOR BEAM 5-1.
FOR FLOOR BEAM AND STRINGER NOMENCLATURE, REFER TO GENERAL NOTES (1 OF 3), DRAWINGS AND DIMENSIONS.

WORK IDENTIFICATION

1 REPLACE RIVETS WITH HIGH STRENGTH BOLTS

NOTES:

1. CONTRACTOR SHALL SUBMIT TO THE ENGINEER FOR APPROVAL THE PROPOSED METHOD FOR RIVET REMOVAL IN ACCORDANCE WITH THE REQUIREMENTS IN SECTION 5-1 OF THE FDOT STANDARD SPECIFICATIONS.
2. IN THE EVENT THAT THE ENGINEER DETERMINES THAT RIVET REMOVAL WORK IS RESULTING IN DAMAGE TO THE EXISTING STEEL, THE CONTRACTOR SHALL CEASE RIVET REMOVAL OPERATIONS UNTIL A NEW METHOD HAS BEEN APPROVED BY THE ENGINEER.
3. THE DAMAGED RIVET HEAD SHALL BE BE CHIPPED OFF AND THE SHANK DRIVEN, DRILLED, CORED, OR JACKED OUT AS REQUIRED. CARE SHALL BE TAKEN NOT TO ENLARGE RIVET HOLES OR TO DAMAGE REMAINING MATERIAL. THE USE OF A CUTTING TORCH WILL NOT BE PERMITTED.
4. WHERE EXISTING RIVETS ARE REMOVED, AND THE RESULTING HOLES REQUIRE ENLARGEMENT, THE HOLES SHALL BE ENLARGED BY NOT MORE THAN 1/16" IN DIAMETER GREATER THAN THE NOMINAL BOLT DIAMETER SHOWN ON THE PLANS. WHERE REQUIRED, HOLE ENLARGEMENT SHALL BE ACCOMPLISHED BY REAMING.
5. INSIDE SURFACES OF HOLES EXPOSED AFTER RIVET REMOVAL SHALL BE PAINTED IN ACCORDANCE WITH SECTIONS 560 AND 975 OF THE FDOT STANDARD SPECIFICATIONS AND OTHER NOTES REGARDING CLEANING AND PAINTING OF STRUCTURAL STEEL IN THE TECHNICAL SPECIAL CONDITIONS.
6. INSTALL NEW HIGH STRENGTH BOLT (ASTM A325) WITH HARDENED WASHER AND HEAVY HEX NUT. BOLT DIAMETER IS TYPICALLY 7/8 ", UNLESS NOTED OTHERWISE. BOLT LENGTHS TO BE APPROVED BY THE ENGINEER.
7. BOLTS SHALL BE PROPERLY LUBRICATED AND TENSIONED ACCORDING TO THE SPECIFICATIONS.
8. CLEAN AND PAINT NEW BOLT AND IMMEDIATE AREA OF REPAIR ACCORDING TO THE SPECIFICATIONS AFTER COMPLETION OF REPAIR.
9. PAY ITEM 460-81, RIVET OR HIGH STRENGTH BOLT REPLACEMENT (EA), SHALL INCLUDE ALL MATERIALS AND WORK DESCRIBED ABOVE FOR THE REMOVAL OF EXISTING RIVET OR BOLT AND INSTALLATION OF NEW BOLTS. ESTIMATED QUANTITY FOR BIDDING PURPOSES = 150 EACH.
10. AT LOCATIONS WHERE DAMAGE TO THE SURROUNDING MATERIAL OCCURS AS A RESULT OF CONTRACTOR'S OPERATIONS, THE SURROUNDING MATERIAL SHALL BE REPAIRED AT THE CONTRACTOR'S EXPENSE.

2 REPAIR LOCATIONS:

LOCATIONS INCLUDE BUT MAY NOT BE LIMITED TO: OVER STRINGER 5-3 AND FLOOR BEAM 5-3, OVER STRINGER 5-6 AND TRANSVERSE MEMBER 5-3, OVER STRINGER 5-9, 5'-0" WEST OF FLOOR BEAM 5-3, AND OVER FLOOR BEAM 5-2 SOUTH OF STRINGER 5-3.
FOR FLOOR BEAM AND STRINGER NOMENCLATURE, REFER TO GENERAL NOTES (1 OF 3), DRAWINGS AND DIMENSIONS.

WORK IDENTIFICATION

2 REPAIR BROKEN WELDS ON GRID DECK

NOTES:

1. THOUROUGHLY INSPECT ALL DECK ATTACHMENT WELDS THROUGHOUT THE ENTIRE OPEN GRATING AREA. IDENTIFY AND RECORD GENERAL AREAS OF BROKEN WELDS FOR DOCUMENTATION OF EXISTING CONDITIONS AND THE ENGINEER'S APPROVAL FOR REPAIR.
2. REPAIR AREAS OF BROKEN DECK WELDS WITH NEW WELDS ON BOTH SIDES.
3. CONTRACTOR TO SUBMIT WELD PROCEDURE TO ENGINEER FOR APPROVAL PRIOR TO REPAIRS.
4. CONTRACTOR TO SUBMIT WELDER'S CERTIFICATION FOR WELD REPAIR PROCESS TO ENGINEER FOR VERIFICATION PRIOR TO WELD REPAIRS.
5. PAYMENT FOR ALL WORK ASSOCIATED WITH REPAIR DECK WELDS WILL BE INCIDENTAL TO PAY ITEM 460-95, STRUCTURAL STEEL REPAIR (LB).
6. NO REPAIRS SHALL COMMENCE UNTIL OBTAINING THE ENGINEER'S APPROVAL.
7. APPLY GALVANIZED COATING TO WELD REPAIR AREAS.

BRIDGE NO. 105503

REVISIONS

DATE	BY	DESCRIPTION	DATE	BY	DESCRIPTION

	NAMES	DATES
DRAWN BY	DMK	10/10
CHECKED BY	DBT	10/10
DESIGNED BY	PDM	10/10
CHECKED BY	DBT	10/10
APPROVED BY	D. B. THOMPSON	

ENGINEER OF RECORD:
Kisinger Campo and Associates Corp.
One Tampa City Center
201 N. Franklin St., Suite 400
TAMPA, FLORIDA 33602
FL Certificate of Authorization No. 02317
David B. Thompson, P.E. No. 45403

LOGO:

CITY OF TAMPA

SHEET TITLE: STEEL REPAIRS (1 OF 4)

PROJECT NAME: LAUREL STREET BRIDGE REPAIR

SHEET NO. 8

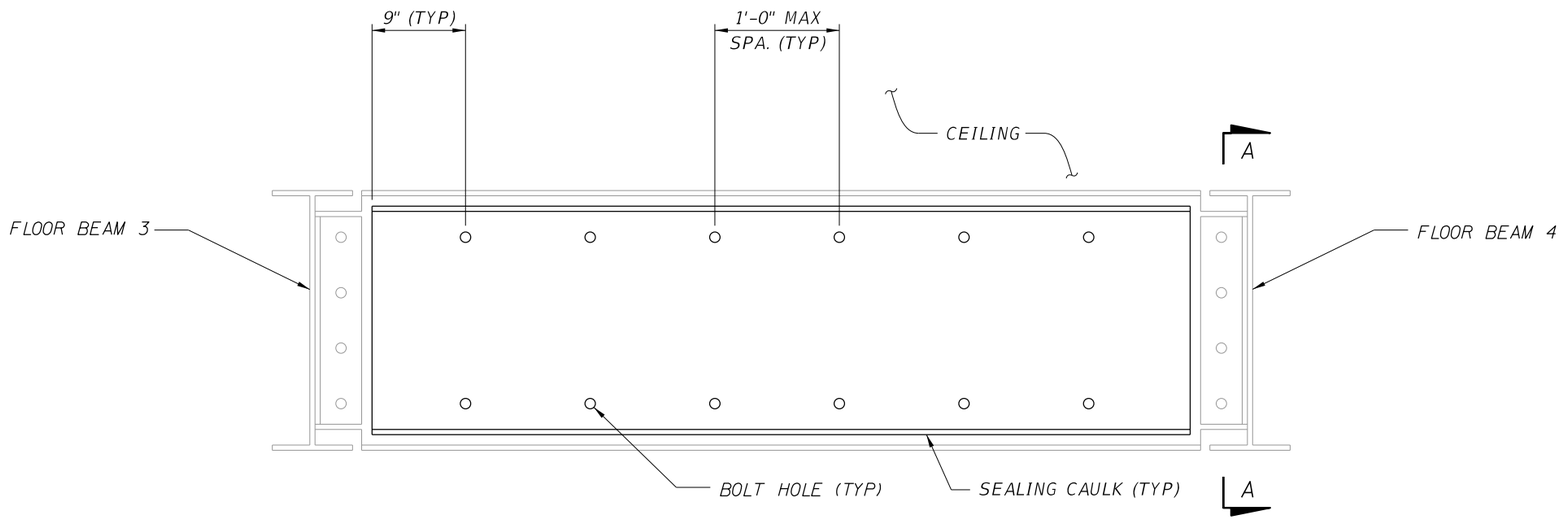

STEEL DIAPHRAGM

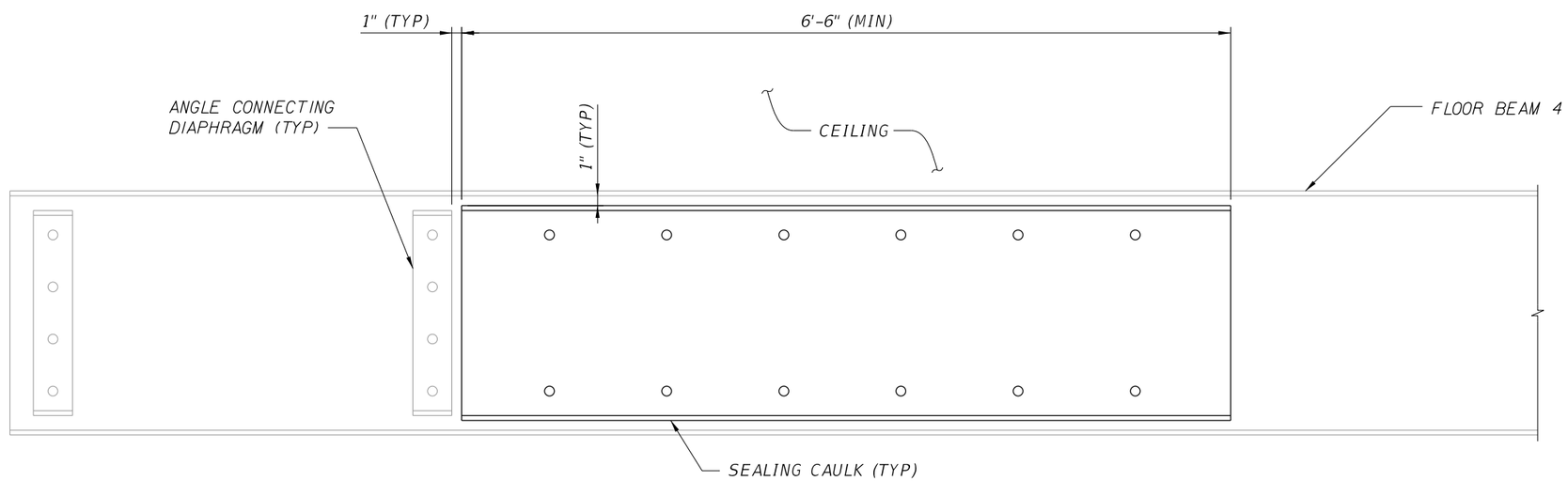

SECTION A-A

REPAIR LOCATIONS:

INSIDE STORAGE HOUSE,
FLOOR BEAMS 3 & 4,
AND DIAPHRAGM

NOTES:

1. CLEAN ALL RUST AND DEBRIS FROM MEMBERS.
2. PREPARE FAYING SURFACES BETWEEN NEW CHANNEL AND EXISTING I-BEAM BY CLEANING AND COATING IN ACCORDANCE WITH FDOT SPECIFICATION 460-5.4.2.
3. INSTALL NEW CHANNELS ON BOTH SIDES OF WEBS AT LOCATIONS SHOWN.
4. CLEAN AND PAINT REPAIRED STEEL AREAS ACCORDING TO THE SPECIFICATIONS AFTER FINAL COMPLETION OF REPAIRS.
5. APPLY SEALANT CAULK AROUND EDGES OF CHANNEL TO CLOSE ANY GAPS BETWEEN THE EXISTING FLOOR BEAM OR DIAPHARGM AND THE PROPOSED CHANNEL.
6. BOLTS USED FOR CONNECTIONS SHALL BE 7/8" DIAMETER HIGH STRENGTH SLIP CRITICAL TYPE I BOLTS IN ACCORDANCE WITH ASTM A325.
7. NEW CHANNELS SHALL BE A MINIMUM OF 1/2" THICK. CONTRACTOR SHALL DETERMINE HEIGHT USING FIELD MEASUREMENTS.
8. PAYMENT FOR ALL WORK REQUIRED FOR REPAIR SHALL BE PAID UNDER PAY ITEM 460-95, STRUCTURAL STEEL REPAIR (LB).

BRIDGE NO. 105503

REVISIONS

DATE	BY	DESCRIPTION	DATE	BY	DESCRIPTION

	NAMES	DATES
DRAWN BY	DMK	10/10
CHECKED BY	DBT	10/10
DESIGNED BY	PDM	10/10
CHECKED BY	DBT	10/10
APPROVED BY	D. B. THOMPSON	

ENGINEER OF RECORD:
Kisinger Campo and Associates Corp.
One Tampa City Center
201 N. Franklin St., Suite 400
TAMPA, FLORIDA 33602
FL Certificate of Authorization No. 02317
David B. Thompson, P.E. No. 45403

LOGO:

CITY OF TAMPA

SHEET TITLE:
STEEL REPAIRS (2 OF 4)

PROJECT NAME:
LAUREL STREET BRIDGE REPAIR

SHEET NO.
9

REVISION: 0 10/1/14 DRH

$$$$$$ PLOT STATION TEXT $$$$$$

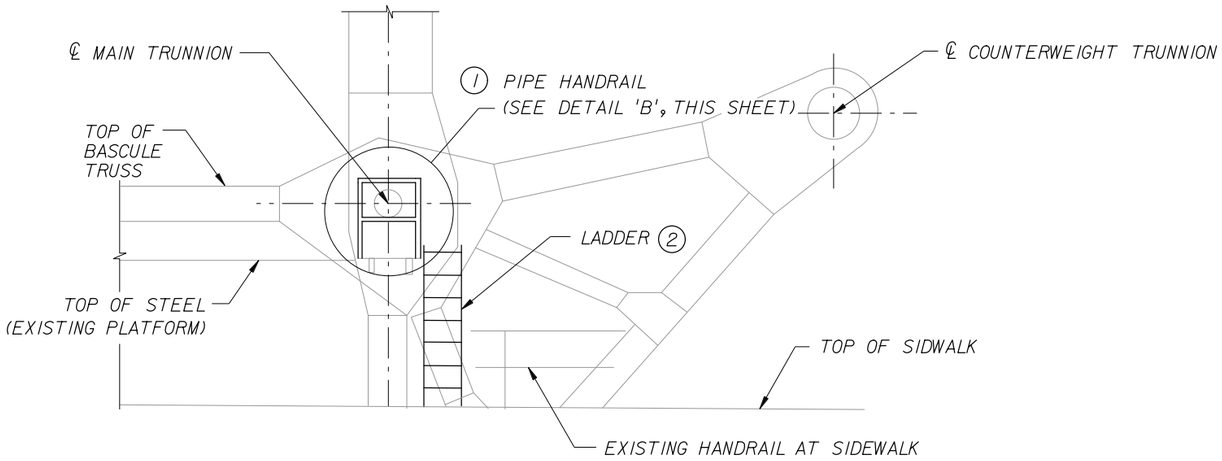

ELEVATION

(NORTH TRUNNION SHOWN, LOOKING SOUTH - SOUTH TRUNNION, LOOKING NORTH IS SIMILAR BUT OPPOSITE)

MAIN TRUNNION HANDRAIL AND LADDER

(REFER TO EXISTING PLANS SHEET BX-39)

WORK IDENTIFICATON:

1. REMOVE AND REPLACE NORTH TRUNNION HANDRAIL
2. REMOVE AND REWORK NORTH AND SOUTH TRUNNION LADDERS

NOTES:

1. REMOVE NORTH TRUNNION HANDRAIL IN ITS ENTIRETY.
2. REINSTALL NEW HANDRAIL IN ACCORDANCE WITH EXISTING PLANS SHEET BX-39.
3. REMOVE NORTH AND SOUTH TRUNNION LADDERS.
4. REWORK AND STRAIGHTEN NORTH AND SOUTH TRUNNION LADDERS TO ORIGINAL CONDITION.
5. SANDBLAST THE LADDERS TO NEAR WHITE CONDITION, GALVANIZE TO ASTM A123, AND REINSTALL.
6. CONTRACTOR MAY, AS AN ALTERNATE, AT NO ADDITIONAL COST TO THE CITY, PROVIDE NEW PREFABRICATED LADDER OF SIMILAR CONSTRUCTION UPON ENGINEER'S APPROVAL OF SHOP DRAWINGS.

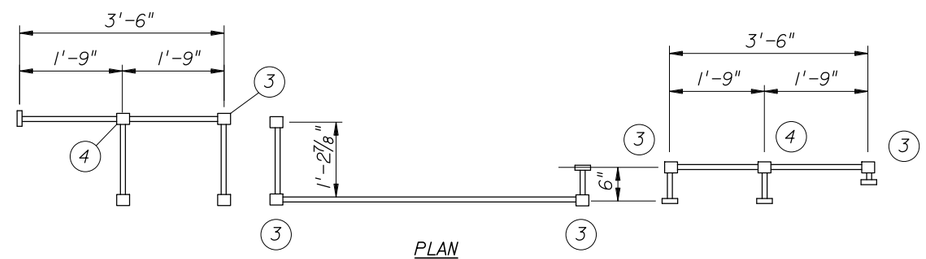

PLAN

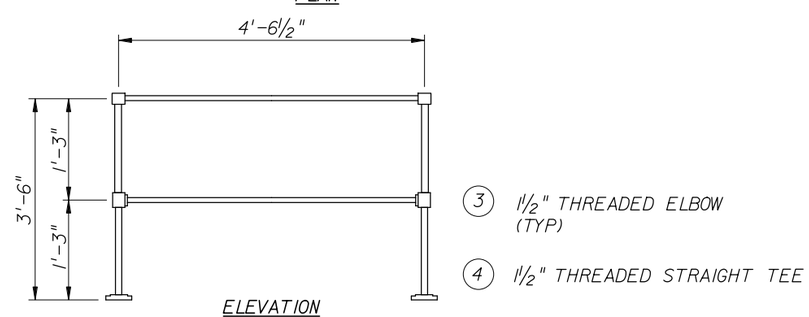

ELEVATION

DETAIL 'B'

NEW 1 1/2" Ø PIPE HANDRAIL FOR PLATFORM

MATERIALS:
PIPE: 1 1/2" Ø SCHEDULE CARBON STEEL HOT-DIPPED GALV.
FITTINGS: SHALL BE 150# THREADED MALLEABLE IRON.
HOT-DIPPED GALV. (ASTM-A123)

BRIDGE NO. 105503

REVISIONS

DATE	BY	DESCRIPTION	DATE	BY	DESCRIPTION

	NAMES	DATES
DRAWN BY	DMK	10/10
CHECKED BY	DBT	10/10
DESIGNED BY	PDM	10/10
CHECKED BY	DBT	10/10
APPROVED BY	D. B. THOMPSON	

ENGINEER OF RECORD:
Kisinger Campo and Associates Corp.
One Tampa City Center
201 N. Franklin St., Suite 400
TAMPA, FLORIDA 33602
FL Certificate of Authorization No. 02317
David B. Thompson, P.E. No. 45403

LOGO:

CITY OF TAMPA

SHEET TITLE: STEEL REPAIRS (3 OF 4)

PROJECT NAME: LAUREL STREET BRIDGE REPAIR

SHEET NO. 10

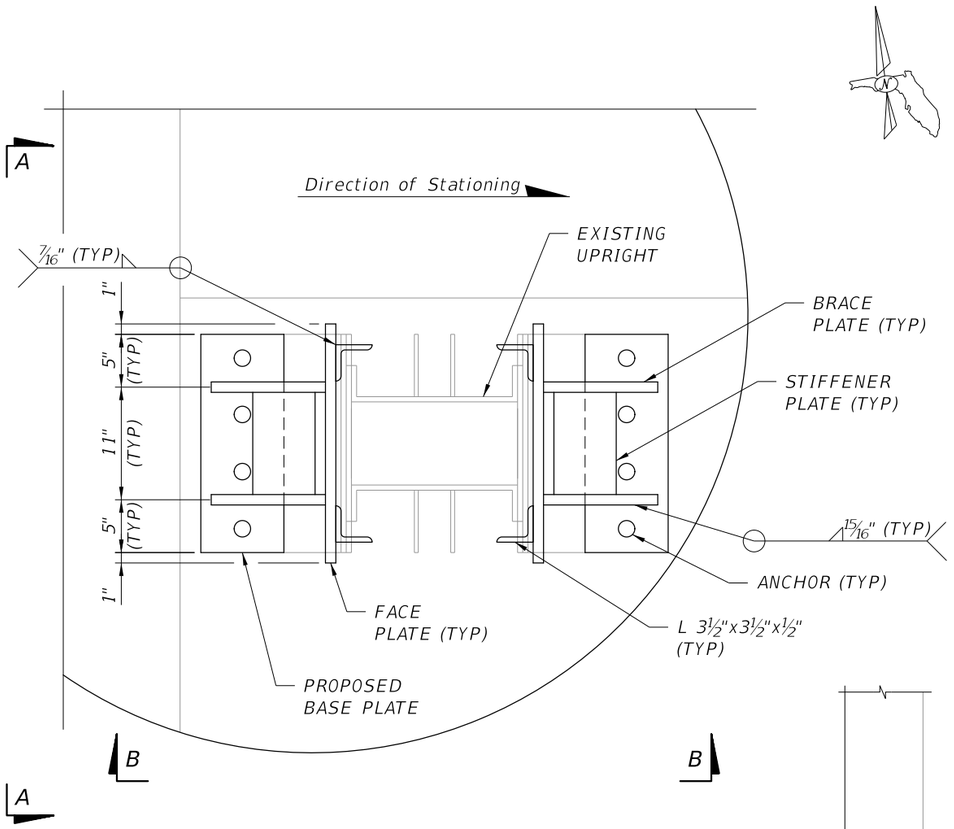

PLAN OF SUPPORT COLUMN

NORTH SUPPORT COLUMN SHOWN, SOUTH SIMILAR

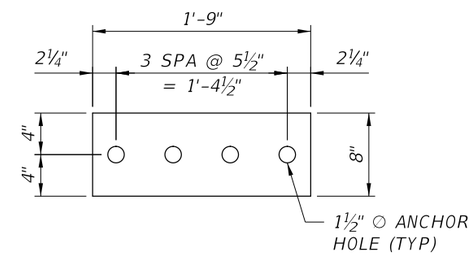

DETAIL OF BASE PLATE

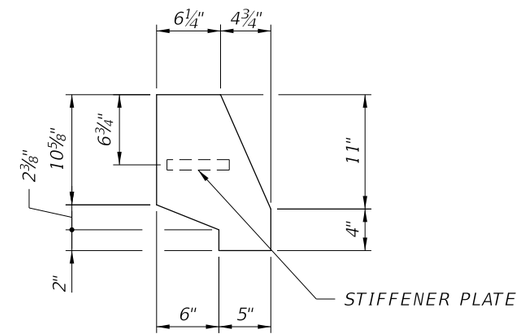

DETAIL OF BRACE PLATE

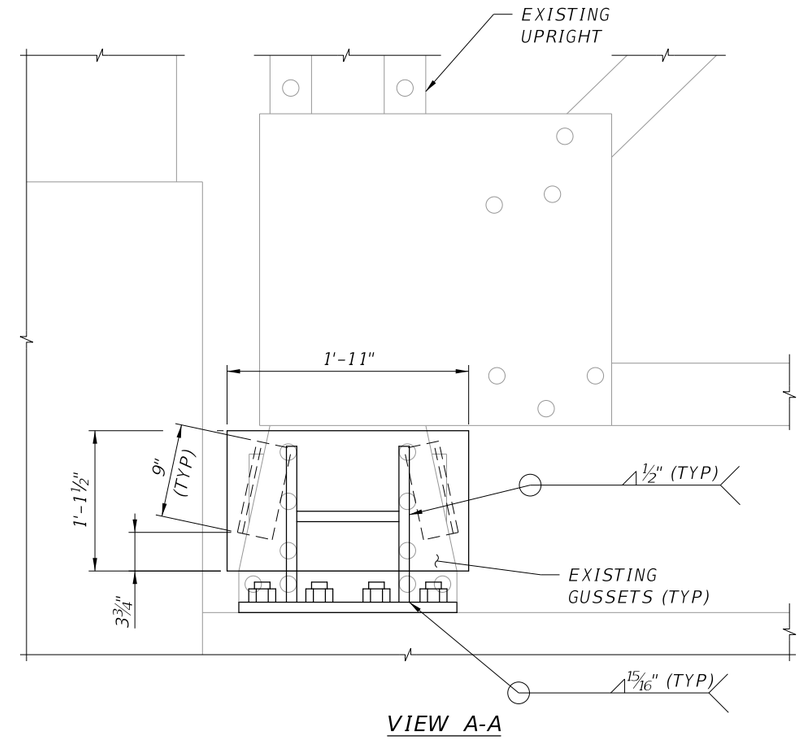

VIEW A-A

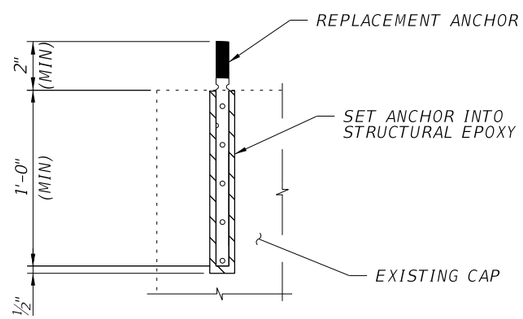

PROPOSED ANCHOR DETAIL

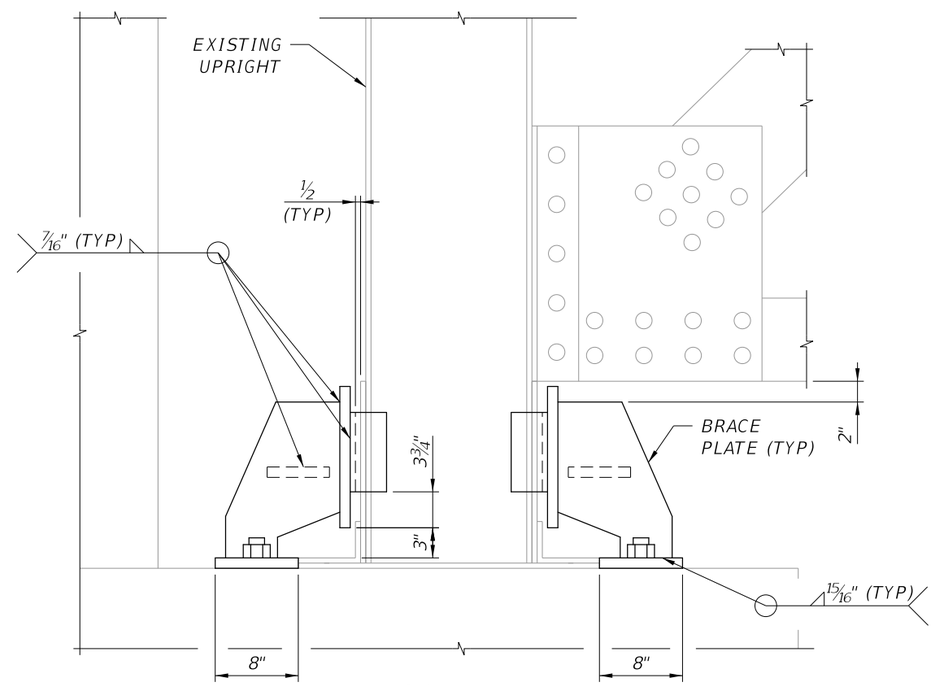

VIEW B-B

BRACE PLATE SYSTEM:

1. LOCATIONS FOR THE BRACE PLATE SYSTEM INCLUDE THE NORTH AND SOUTH BASCULE COLUMN.
2. INSTALL BRACE PLATE ASSEMBLY ON EAST AND WEST SIDES OF EXISTING BASE PLATE.
3. CONTRACTOR SHALL TAKE FIELD MEASUREMENTS TO VERIFY PLATE SIZES AND CLEARANCES BEFORE ORDERING ANY MATERIAL.
4. ALL PLATES SHALL BE 1" THICK MINIMUM.
5. PROPOSED ANCHORS SHALL BE 1" ∅ STEEL IN ACCORDANCE WITH ASTM F1554 GRADE 55 GALVANIZED, AND SHALL BE INSTALLED IN ACCORDANCE WITH SECTION 460 OF THE FDOT STANDARD SPECIFICATIONS.
6. HOLES FOR PROPOSED ANCHORS SHALL BE CORE DRILLED AND SHALL BE THOROUGHLY CLEANED PRIOR TO PLACING GROUT AND PROPOSED ANCHOR.
7. PRIOR TO ANY PLATES BEING FABRICATED THE EXISTING GUSSETS AND ANY AREA WHICH WILL BE AFFECTED BY THE REPAIRS SHALL BE CLEANED ACCORDING TO THE SPECIFICATIONS.
8. COAT ALL AREAS AFFECTED BY REPAIR IN ACCORDANCE WITH THE SPECIFICATIONS AFTER WORK IS COMPLETED.
9. SEE EXISTING PLANS SHEET BX-19 FOR MORE INFORMATION.

BRIDGE NO. 105503

REVISIONS: 0 10/1/14 DRH

REVISIONS					
DATE	BY	DESCRIPTION	DATE	BY	DESCRIPTION

	NAMES	DATES
DRAWN BY	DMK	10/10
CHECKED BY	DBT	10/10
DESIGNED BY	PDM	10/10
CHECKED BY	DBT	10/10
APPROVED BY	D. B. THOMPSON	

ENGINEER OF RECORD:
Kisinger Campo and Associates Corp.
One Tampa City Center
201 N. Franklin St., Suite 400
TAMPA, FLORIDA 33602
FL Certificate of Authorization No. 02317
David B. Thompson, P.E. No. 45403

LOGO:

CITY OF TAMPA

SHEET TITLE: STEEL REPAIRS (4 OF 4)

PROJECT NAME: LAUREL STREET BRIDGE REPAIR

SHEET NO. 11

TYPICAL CRACK REPAIR METHOD

1. REMOVE UNSOUND CONCRETE FROM CRACK AREA.
2. OBTAIN ENGINEER'S APPROVAL TO CARRY OUT CRACK REPAIR (IN LIEU OF SPALL REPAIR) FOR CASES WHERE ADJACENT CONCRETE IS OTHERWISE SOUND AND CRACKING IS NOT A RESULT OF CORRODING REINFORCEMENT.
3. DRILL HOLES FOR EPOXY INJECTION AND AIRVENTING AND SEAL EXPOSED CRACK SURFACES IN ACCORDANCE WITH SECTION 411 OF THE SPECIFICATIONS AND MANUFACTURER'S RECOMMENDATIONS.
4. INJECT EPOXY INTO SEALED CRACK. WHEN MATERIAL EXTRUDES FROM VENT HOLES, STOP OPERATIONS AND ALLOW FOR CURING.
5. APPLY CLASS II FINISH AT CRACK REPAIR TO REMOVE FINS OR KNOBS.
6. FOR CRACKS 1/32" TO 1/8" USE EPOXY RESIN WITH A VISCOSITY OF 325 CPS, 28 DAY COMPRESSIVE STRENGTH OF 13000 PSI. FOR CRACKS 1/8" TO 1/4", USE INJECTION GEL OR NON-SAG PASTE WITH 28 DAY COMPRESSIVE STRENGTH OF 10000 PSI.
7. FOR CAP SEAL, USE INJECTION GEL WITH 28 DAY COMPRESSIVE STRENGTH OF 12000 PSI.
8. CRACK REPAIR SHALL BE PAID IN ACCORDANCE WITH PAY ITEM 400-135 INJECT AND SEAL CRACKS AND PAY ITEM 400-134, EPOXY MATERIAL. THE COST OF THE CAP SEAL MATERIAL SHALL BE INCIDENTAL TO THE WORK.

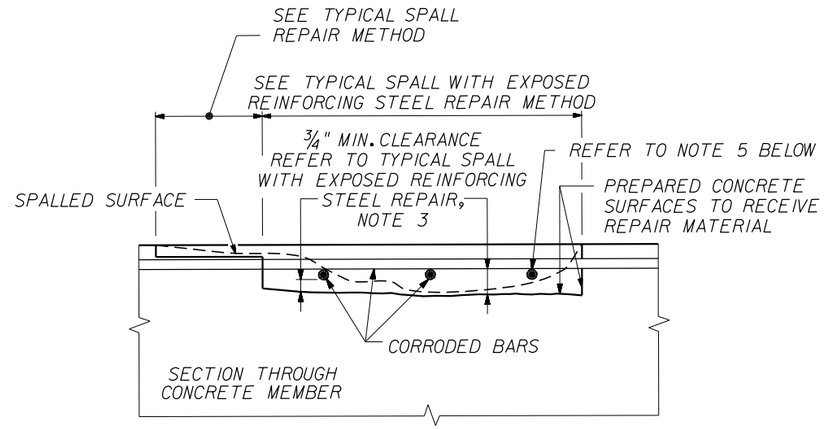

EXPOSING AND UNDERCUTTING REINFORCING STEEL

APPLICABLE TO HORIZONTAL, VERTICAL, AND OVERHEAD LOCATIONS

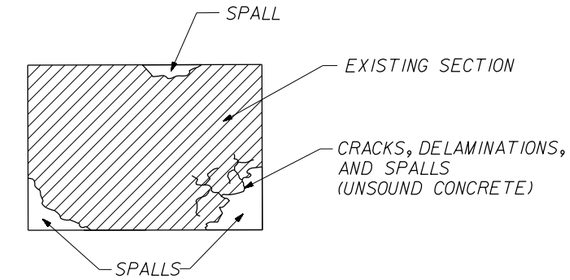

TYPICAL DELAMINATIONS AND SPALLS

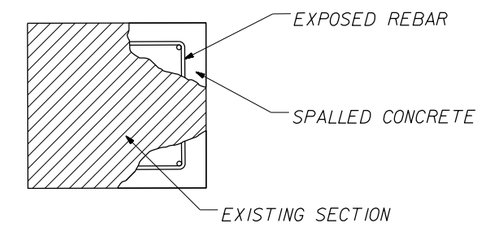

TYPICAL SPALL WITH EXPOSED REBARS

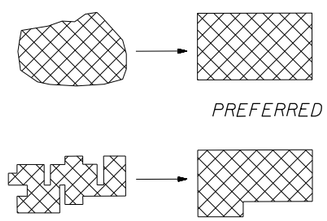

SIMPLE PATCH CONFIGURATION

AT CORNER LOCATIONS PROVIDE RIGHT ANGLE CUTS.
PATCH CONFIGURATIONS SHALL BE KEPT AS SIMPLE AS POSSIBLE.
INDIVIDUAL REPAIR AREAS WITHIN 2 FEET SHALL BE JOINED AT THE DIRECTION OF THE ENGINEER.

LAP SPLICE TABLE	
REBAR SIZE	LAP SPLICE LENGTH
BARS 4 THRU 6	24 TIMES BAR DIAMETER
7	25"
8	33"
9	42"
10	53"
11	65"

CRACK WIDTHS	
CLASS	THICKNESS (in)
1	LESS THAN 1/64
2	1/64 TO 1/32
3	1/32 TO 1/16
4	1/16 TO 1/8
5	GREATER THAN 1/8

TYPICAL SPALL REPAIR METHOD

1. REMOVE UNSOUND CONCRETE FROM ELEMENT IN ACCORDANCE WITH THIS SHEET AND THE SPECIFIC PROVISIONS.
2. CLEAN CONCRETE SURFACES AND FILL VOIDS WITH REPAIR MATERIAL IN ACCORDANCE WITH SPECIFICATIONS AND SPECIFIC PROVISIONS FOR CONCRETE RESTORATION.
3. ALL REPAIR AREAS SHALL HAVE SQUARE EDGES AROUND THE PERIMETER OF THE SPALL DEFINED BY 3/4" DEEP SAW CUT LINES. CHIP THE REPAIR EDGES CLEAN TO FORM 45 TO 90 DEGREE CORNERS ALONG THE EDGES AND CORNERS OF THE REPAIR AREA. THE DEPTH OF THE CHIPPED EDGES SHALL BE 3/4" OR GREATER. FEATHERED EDGES WILL NOT BE ACCEPTABLE.

TYPICAL SPALL WITH EXPOSED REINFORCING STEEL REPAIR

1. REMOVE UNSOUND CONCRETE IN ACCORDANCE WITH THIS SHEET AND THE SPECIFIC PROVISIONS.
2. REMOVE ANY LOOSE OR DELAMINATED CONCRETE ABOVE CORRODED REINFORCING STEEL. ONCE INITIAL REMOVALS ARE MADE, PROCEED WITH THE UNDERCUTTING OF EXPOSED CORRODED BARS. UNDERCUTTING WILL PROVIDE CLEARANCE FOR UNDER BAR CLEANING, FULL BAR CIRCUMFERENCE BONDING TO SURROUNDING CONCRETE, AND WILL SECURE THE PATCH STRUCTURALLY. REFER TO GENERAL NOTES FOR POLLUTION CONTROL.
3. PROVIDE MINIMUM 3/4" CLEARANCE BETWEEN EXPOSED REBARS AND SURROUNDING CONCRETE OR 1/4" LARGER THAN LARGEST AGGREGATE IN REPAIR MATERIAL, WHICHEVER IS GREATER.
4. CONCRETE REMOVAL SHALL EXTEND ALONG THE BARS TO LOCATIONS ALONG THE BAR FREE OF BOND INHIBITING CORROSION, AND WHERE THE BAR IS WELL BONDED TO SURROUNDING CONCRETE.
5. IF NON-CORRODED REINFORCING STEEL IS EXPOSED DURING THE UNDERCUTTING PROCESS, CARE SHALL BE TAKEN NOT TO DAMAGE THE BAR'S BOND TO SURROUNDING CONCRETE. IF BOND BETWEEN BAR AND CONCRETE IS BROKEN, UNDERCUTTING OF THE BAR SHALL BE REQUIRED.
6. ANY REINFORCEMENT WHICH IS LOOSE SHALL BE SECURED IN PLACE BY TYING TO OTHER SECURED BARS OR BY OTHER APPROVED METHODS.
7. CLEAN EXPOSED REBARS AND ANY LOOSE CONCRETE OR ABRASIVES BY SANDBLASTING (ABOVE WATER) OR HIGH PRESSURE WASH AND HAND TOOL CLEAN (BELOW WATER).
8. ANY REINFORCING STEEL WITH MORE THAN 1/4 OF THE DIAMETER LOSS SHALL BE REINFORCED. CONCRETE WILL BE REMOVED FROM THE BAR FOR SUFFICIENT LENGTH TO ALLOW FOR A LAP SPLICE AT EACH END IN ACCORDANCE WITH THE LAP SPLICE TABLE. THE MINIMUM LAP SPLICE SHALL BE 12". THE REINFORCEMENT BAR SHALL BE THE SAME SIZE AS THE ORIGINAL BAR. SQUARE BARS SHALL BE REINFORCED BY A BAR OF SAME OR GREATER AREA. MAINTAIN EXISTING COVER.
9. PREPARE SURFACES AND FILL VOIDS WITH REPAIR MATERIAL IN ACCORDANCE WITH SPECIFICATIONS AND SPECIFIC PROVISIONS FOR CONCRETE RESTORATION.

REFER TO DEFICIENCY LIST, SHEET 13

BRIDGE NO. 105503

REVISIONS

DATE	BY	DESCRIPTION	DATE	BY	DESCRIPTION

	NAMES	DATES
DRAWN BY	DMK	10/10
CHECKED BY	DBT	10/10
DESIGNED BY	PDM	10/10
CHECKED BY	DBT	10/10
APPROVED BY	D. B. THOMPSON	

ENGINEER OF RECORD:
Kisinger Campo and Associates Corp.
One Tampa City Center
201 N. Franklin St., Suite 400
TAMPA, FLORIDA 33602
FL Certificate of Authorization No. 02317
David B. Thompson, P.E. No. 45403

LOGO:

CITY OF TAMPA

SHEET TITLE: CONCRETE RESTORATION

PROJECT NAME: LAUREL STREET BRIDGE REPAIR

SHEET NO. 12

LAUREL STREET BRIDGE: CONCRETE DEFICIENCIES

ELEMENT	DESCRIPTION	EXISTING PLAN SHEET REFERENCE	LOCATION	DEFICIENCY SIZE
BEAM 2-2	DELAMINATION	BX-46	NORTH FACE, 18" FROM PIER 2	2' x 12"
BEAM 3-2	SPALL NO LOSS TO REBAR	BX-46	3 MINOR, NO EXPOSED STEEL	
BEAM 4-1	SPALL EXPOSED REBAR	BX-46	NORTH FACE, 1/4 POINT	8" x 6" x 3/4"
BEAM 10-1	SPALL EXPOSED REBAR	BX-46	NORTH FACE, 1/4 POINT	8" x 6" x 5/8"
BEAM 11-8	SPALL EXPOSED REBAR	BX-46	SOUTH FACE	8" x 6" x 3/4"
COLUMN 3-1	CRACKING	BX-49	COLUMN BASE	4' x 1/8"
COLUMN 3-2	CRACKING	BX-49	COLUMN BASE	4' x 1/8"
COLUMN 3-2	SPALL NO EXP. REBAR	BX-49	SW QUADRANT 4'-2" BELOW TOP OF MARINE GROWTH	8" x 9" x 1"
COLUMN 3-2	SPALL NO EXP. REBAR	BX-49	SE QUADRANT 3'-0" BELOW TOP OF MARINE GROWTH	10" x 9" x 2"
COLUMN 4-1	CRACKING	BX-49	COLUMN BASE	4' x 1/8"
COLUMN 4-2	CRACKING	BX-49	COLUMN BASE	4' x 1/8"
COLUMN 5-1	SPALL NO EXP. REBAR	BX-49	8' BELOW TOP OF MARINE GROWTH	24" x 6" x 2 1/4"
COLUMN 5-6	SPALL NO EXP. REBAR	BX-49	NORTH SIDE 24" BELOW TOP OF MARINE GROWTH	4" x 9" x 2 1/4"
COLUMN 6-2	CRACKING	BX-49	COLUMN BASE	4' x 1/8"
COLUMN 6-3	SPALL NO EXP. REBAR	BX-49	NE QUADRANT 3'-6" BELOW TOP OF MARINE GROWTH	4" x 3 1/4" x 6"
COLUMN 6-3	SPALL NO EXP. REBAR	BX-49	NE QUADRANT 12" BELOW TOP OF MARINE GROWTH	5" x 24" x 3"
COLUMN 6-3	CRACK WITH CORROSION STAIN	BX-49	SE QUADRANT, TOP OF MARINE GROWTH	5" x 1/16"
COLUMN 9-1	SPALL	BX-49	NW QUADRANT 22" BELOW TOP OF MARINE GROWTH	8" x 8" x 1 1/2"
COLUMN 10-1	SPALL NO EXP. REBAR	BX-49	SOUTHSIDE 12" BELOW TOP OF MARINE GROWTH	8" x 12" x 1 1/2"
STRUT (BETWEEN COLUMNS 5-1 AND 5-6)	SPALL 30% SECTION LOSS TO REBAR	BX-49, BX-50	ALONG BOTTOM EDGE	20" x 12" x 4"
STRUT (BETWEEN COLUMNS 5-1 AND 5-6)	SPALL 30% SECTION LOSS TO REBAR	BX-49, BX-50	BOTTOM S. FLANGE	20' x 12" x 4"
STRUT (BETWEEN COLUMNS 5-2 AND 5-7)	SPALL 30% SECTION LOSS TO REBAR	BX-49, BX-50	ALONG BOTTOM EDGE	20' x 12" x 4"
STRUT (BETWEEN COLUMNS 5-7 AND 5-9)	CRACKING	BX-49, BX-50	HORIZONTAL, LENGTH OF STRUT, 6" FROM BOTTOM	Lstrut x 1/16"
STRUT (BETWEEN COLUMNS 5-5 AND 5-9)	CRACKING	BX-49, BX-50	NORTH FACE, HORIZONTAL, LENGTH OF STRUT, 6" FROM BOTTOM	Lstrut x 1/16"

ELEMENT	DESCRIPTION	EXISTING PLAN SHEET REFERENCE	LOCATION	DEFICIENCY SIZE
PIER 6	DELAMINATION	BX-49	WEST FACE WALL MID-POINT, 2' ABOVE TOP OF MARINE GROWTH	16" x 10"
PIER 6	DELAMINATION	BX-49	THROUGHOUT	UP TO 16" x 20"
PIER 5	SPALL	BX-49, BX-50	EAST FACE NEAR SOUTH END	12" x 12" x 1"
PIER 5	SPALL	BX-49, BX-50	SOUTH FACE	AROUND WINDOW
TRANSVERSE BEAMS	DELAMINATIONS	BX-49, BX-50	THROUGHOUT BOTTOM (5 OF 6 BMS)	7' x 16"
DIAPHRAGMS	SPALL 30% SECTION LOSS TO REBAR	BX-49, BX-50	BETWEEN TRANSVRESE BEAMS	12" x 8" x 2"
DIAPHRAGMS	DELAMINATIONS	BX-49, BX-50	BETWEEN TRANSVERSE BEAMS	
DIAPHRAGM 4-4	SPALL EXPOSED REBAR	BX-49, BX-50	BOTTOM, EAST EDGE, NEAR BEAM 4-5	4" x 3" x 8"
FLOOR	SPALL SOME SECTION LOSS TO REBAR	BX-49, BX-50	ADJACENT TO COLUMN 5-6	12" x 12" x 2"
FLOOR	DELAMINATIONS	BX-49, BX-50	ADJACENT TO COLUMN 5-8	2' x 8"
PIER 2 CAP	DELAMINATION	BX-49	BOTTOM AND EAST FACES	6' x 12"
PIER 6 CAP	SPALL NO EXPOSED REBAR	BX-49	UPPER SOUTH EDGE	18' x 11" x 1/2"
PIER 10 CAP	SPALL NO LOSS TO REBAR	BX-49	WEST FACE ABOVE COLUMN 10-2	8" x 4" x 1 1/4"
PIER 11 CAP	DELAM. PATCH	BX-49	NORTH END ON BOTTOM	7" x 4"
APPROACH	DELAMINATION	BX-44	SIDEWALKS	4' x 12"
CONCRETE PARAPET WALLS	CRACKING	BX-37	VERTICAL	< 1/16"
BRIDGE DECK	BROKEN OUT CONCRETE FILLER	BX-44	WESTBOUND LANES AT TRANSITION FROM CONCRETE TO STEEL	9' X 12"
BRIDGE DECK	SPALL NO EXPOSED REBAR	BX-44	UNDERSIDE ADJACENT TO BEAM 1-1, 4-1, 6-1, 9-1, & 10-1	1'-4" x 12" x 2"
BRIDGE DECK	SPALL EXPOSED REBAR	BX-44	UNDERSIDE BAY 4-9, 3/4 SPAN	12" x 8" x 3"
BRIDGE RAIL	CRACKING	BX-37	NORTHEAST CORNER SOUTH OF PIER 5; BOTTOM EAST FACE	3' X 1/16"
UNDERSIDE WALKWAY	SPALL	BX-49, BX-50	BOTTOM OF WALKWAY LINKING MAIN WALKWAY TO CENTER WALKWAY	4' X 6"

NOTES:

1. SEE SHEET 12 FOR GENERAL METHOD OF REPAIR.
2. DEFICIENCIES ARE BASED ON LIMITED FIELD REVIEW AND INSPECTION REPORTS AVAILABLE AT THE TIME OF PLANS DEVELOPMENT. THEY ARE NOT NECESSARILY LIMITED TO THOSE INDICATED. THERE IS A POSSIBILITY SOME REPAIRS HAVE BEEN CARRIED OUT SINCE THE INSPECTION WAS COMPLETED. CONTRACTOR SHALL NOTIFY THE ENGINEER OF SUCH LOCATIONS.
3. AREAS NOTED AS DELAMINATION MAY INCLUDE CRACKS AND SPALLS.
4. REPAIR QUANTITIES ARE AN ESTIMATE BASED ON VISUAL CONDITIONS AND PREVIOUS INSPECTION REPORTS AND MAY DECREASE OR INCREASE BASED ON ACTUAL CONDITIONS AT THE TIME OF REPAIR. THE CONTRACTOR SHALL SOUND ALL CONCRETE SURFACES TO DETERMINE THE LIMITS OF UNSOUND CONCRETE TO BE REMOVED AND REPAIRED. LIMITS SHALL BE MARKED ON THE SURFACE FOR REVIEW AND APPROVAL BY THE ENGINEER BEFORE CONCRETE REMOVAL.
5. FOR BRIDGE ELEMENT NOMENCLATURE, REFER TO GENERAL NOTES (1 OF 3), DRAWINGS AND DIMENSIONS.
6. NOTIFY THE ENGINEER OF CHANGES PRIOR TO REPAIR.
7. CONTRACTOR SHALL CLEAN THE TOPS OF ALL PIERS & ABUTMENTS.

BRIDGE NO. 105503

REVISIONS

DATE	BY	DESCRIPTION	DATE	BY	DESCRIPTION

	NAMES	DATES
DRAWN BY	DMK	10/10
CHECKED BY	DBT	10/10
DESIGNED BY	PDM	10/10
CHECKED BY	DBT	10/10
APPROVED BY	D. B. THOMPSON	

ENGINEER OF RECORD:
Kisinger Campo and Associates Corp.
One Tampa City Center
201 N. Franklin St., Suite 400
TAMPA, FLORIDA 33602
FL Certificate of Authorization No. 02317
David B. Thompson, P.E. No. 45403

LOGO:

CITY OF TAMPA

SHEET TITLE: CONCRETE DEFICIENCIES

PROJECT NAME: LAUREL STREET BRIDGE REPAIR

SHEET NO. 13

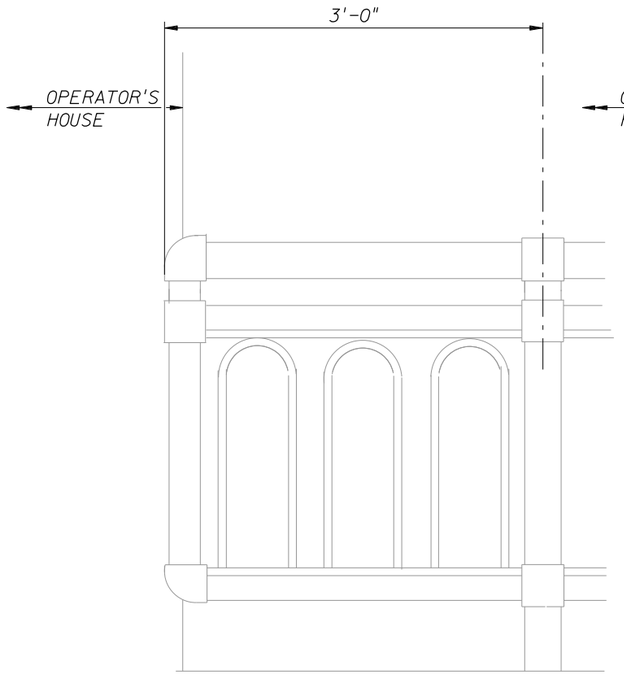

EXISTING CONDITION

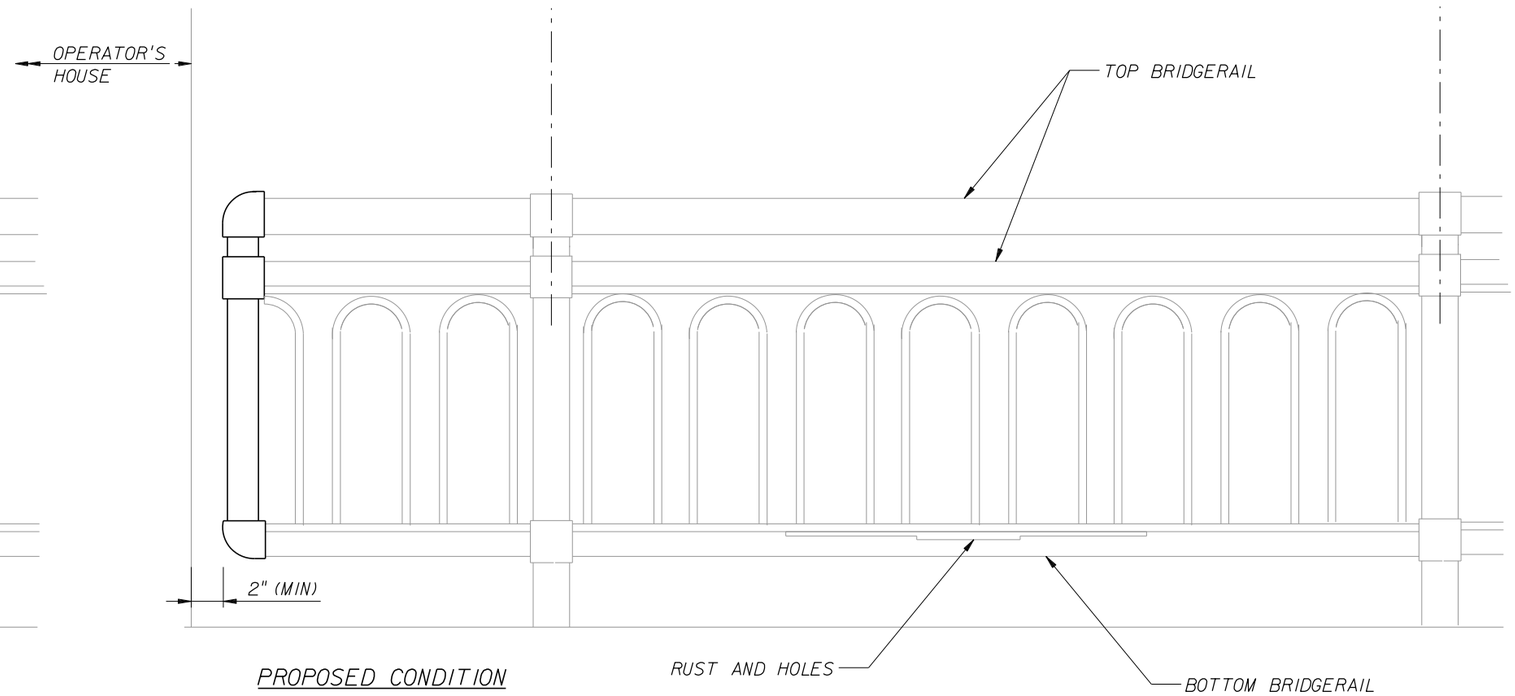

PROPOSED CONDITION

NORTH BRIDGERAIL REPAIR (SOUTH ELEVATION)

1. SHORTEN BRIDGERAIL TO PROVIDE CLEARANCE FROM CORNER OF OPERATOR'S HOUSE.
2. PIPE, DECORATIVE BAR, AND CHANNEL TO BE SAW CUT AND SPLICED TO ACHIEVE CLEARANCE. REFER TO EXISTING PLANS SHEET, BX-26.
3. RAIL TO BE FREE OF BURRS AND VISIBLE DEFECTS, COATED IN ACCORDANCE WITH PLANS AND SPECIFICATIONS.
4. OPERATOR HOUSE TO BE PATCHED AT SOUTHEAST CORNER IN ACCORDANCE WITH PLANS AND SPECIFICATIONS FOR CONCRETE RESTORATION.
5. PAYMENT SHALL BE MADE IN ACCORDANCE WITH PAY ITEM 515-2203, PED/BICYCLE RAILING (STEEL SPECIAL), PER LF.

GENERAL BRIDGERAIL REPAIR

1. REMOVE ALL RUSTED AND DAMAGED BRIDGERAILS.
2. REPLACE REMOVED BRIDGERAILS IN KIND.
3. PAYMENT SHALL BE MADE IN ACCORDANCE WITH PAY ITEM 515-2203, PED/BICYCLE RAILING (STEEL SPECIAL), PER LF.

RACK OPENING HANDRAIL REPAIR

1. REPLACE DAMAGED PIPE SECTONS IN KIND AT NORTH CURB, POSTS 1 AND 2, AND AT SOUTH CURB, POST 3. REMOVE AND REATTACH POSTS ON SOUTH CURB TO REMOVE MOVEMENT.
2. PAYMENT SHALL BE MADE IN ACCORDANCE WITH PAY ITEM 515-2203, PEDESTRIAN/BICYCLE RAILING (STEEL SPECIAL) PER LF.

REVISIONS: 0 10/1/14 DRH

REVISIONS					
DATE	BY	DESCRIPTION	DATE	BY	DESCRIPTION

	NAMES	DATES
DRAWN BY	DMK	10/10
CHECKED BY	DBT	10/10
DESIGNED BY	PDM	10/10
CHECKED BY	DBT	10/10
APPROVED BY	D. B. THOMPSON	

ENGINEER OF RECORD:
Kisinger Campo and Associates Corp.
One Tampa City Center
201 N. Franklin St., Suite 400
TAMPA, FLORIDA 33602
FL Certificate of Authorization No. 02317
David B. Thompson, P.E. No. 45403

LOGO:

CITY OF TAMPA

SHEET TITLE: HANDRAIL REPAIR

PROJECT NAME: LAUREL STREET BRIDGE REPAIR

SHEET NO. 14

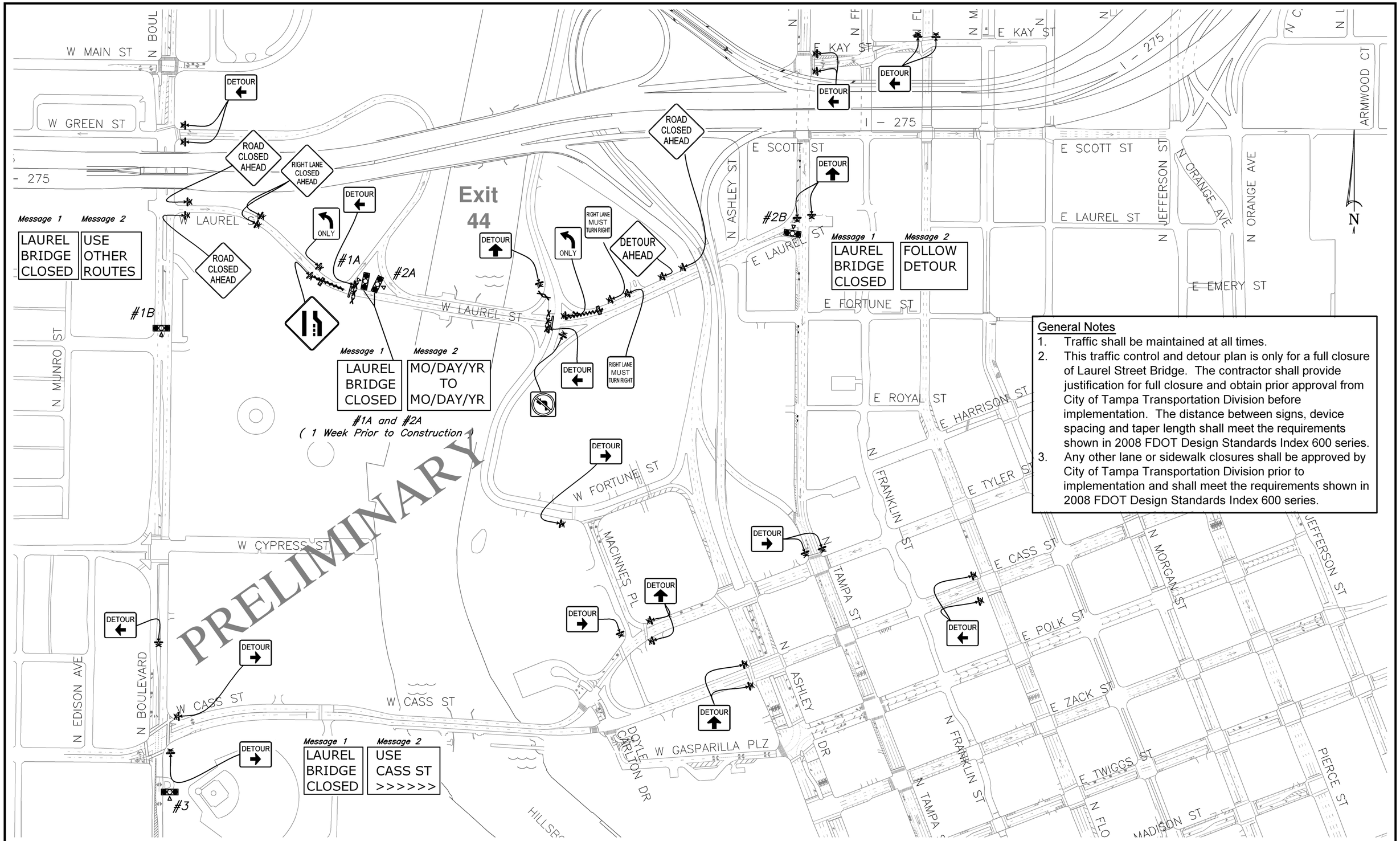

General Notes

1. Traffic shall be maintained at all times.
2. This traffic control and detour plan is only for a full closure of Laurel Street Bridge. The contractor shall provide justification for full closure and obtain prior approval from City of Tampa Transportation Division before implementation. The distance between signs, device spacing and taper length shall meet the requirements shown in 2008 FDOT Design Standards Index 600 series.
3. Any other lane or sidewalk closures shall be approved by City of Tampa Transportation Division prior to implementation and shall meet the requirements shown in 2008 FDOT Design Standards Index 600 series.

pw70 :C:\DOCUME~1\PW70\LOCALS~1\Temp\AcPublish_736\Laurel St Bridge.dwg
Layout- 1 Plotted- Jan. 29, 2010 03:46 PM sheet size ANSI expand B (11.00 x 17.00 Inches)

No.	DATE	REVISIONS
3		
2		
1		

DES: JSL
DRN: MH
CKD: MC
DATE: 1/29/10

CITY OF TAMPA
DEPARTMENT OF PUBLIC WORKS
TRANSPORTATION DIVISION

Traffic Control Plan

Laurel St Bridge Closure

W.O. 9513

Sh. 1 Of 1

DEBORAH A. HERRINGTON, P.E. #39508
CITY OF TAMPA TRAFFIC ENGINEER
TRANSPORTATION DEPARTMENT

APPROVED:

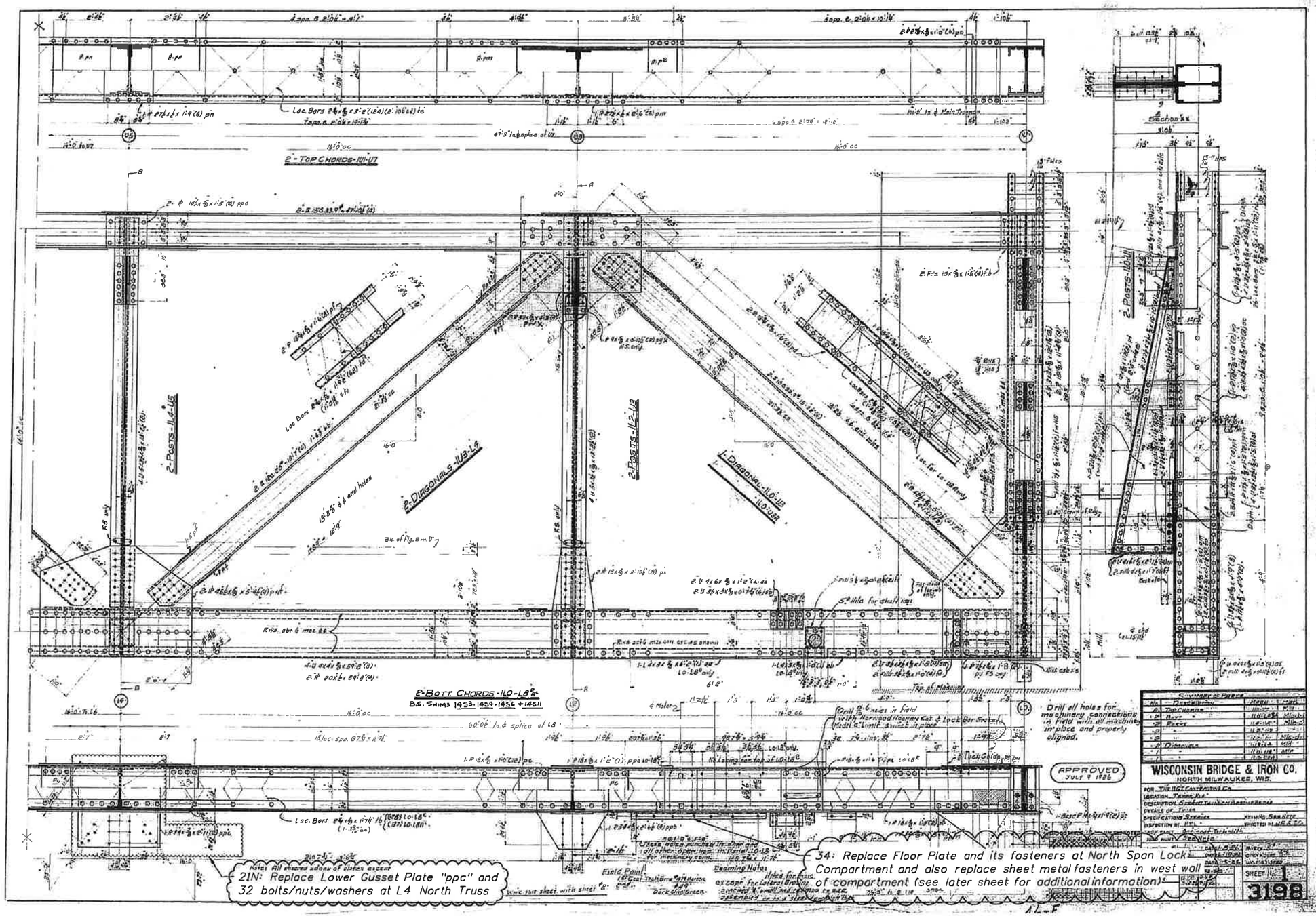

MATTHEW J. TUZ
LICENSE
No. 40836
STATE OF FLORIDA
PROFESSIONAL ENGINEER

REVISIONS					
DATE	BY	DESCRIPTION	DATE	BY	DESCRIPTION

	NAMES	DATES
DRAWN BY	MJR	04-13
CHECKED BY	MJT	04-13
DESIGNED BY	MJT	04-13
CHECKED BY	TJF	04-13
APPROVED BY	Matthew J. Tuz	

ENGINEER OF RECORD:
MATTHEW J. TUZ, P.E.
P.E. License No: 40836
URS CORPORATION SOUTHERN
7650 West Courtney Campbell Causeway
Tampa, Florida 33607
Certificate of Authorization No. 0002

TRANSPORTATION DIVISION
DEPARTMENT OF PUBLIC WORKS
CITY OF TAMPA, FLORIDA

SHEET TITLE: BRIDGE REPAIR DETAILS
SHEET 1 OF 16

PROJECT NAME: LAUREL STREET BRIDGE NO. 105503
OVER THE HILLSBOROUGH RIVER

SHEET NO. B1-04

E.C. DRIVER 4/11/2014 3:24:26 PM F:\2636901\Laurel Street Repairs\Structures\Priority2Repairs.dgn

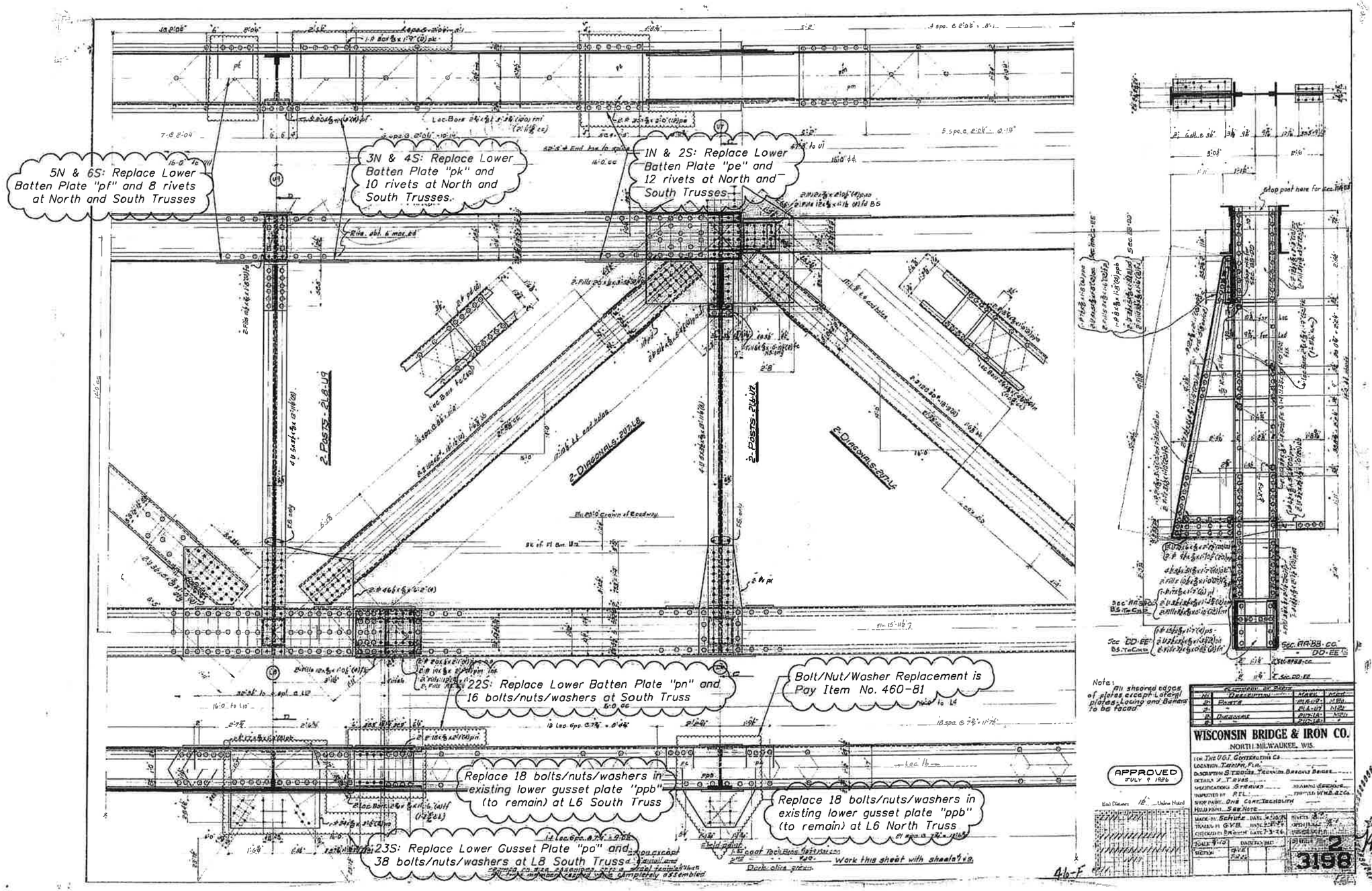

REVISIONS					
DATE	BY	DESCRIPTION	DATE	BY	DESCRIPTION

	NAMES	DATES
DRAWN BY	MJR	04-13
CHECKED BY	MJT	04-13
DESIGNED BY	MJT	04-13
CHECKED BY	TJF	04-13
APPROVED BY	Matthew J. Tuz	

ENGINEER OF RECORD:
MATTHEW J. TUZ, P.E.
P.E. License No: 40836
URS CORPORATION SOUTHERN
7650 West Courtney Campbell Causeway
Tampa, Florida 33607
Certificate of Authorization No. 0002

TRANSPORTATION DIVISION
DEPARTMENT OF PUBLIC WORKS
CITY OF TAMPA, FLORIDA

SHEET TITLE: BRIDGE REPAIR DETAILS
SHEET 2 OF 16

PROJECT NAME: LAUREL STREET BRIDGE NO. 105503
OVER THE HILLSBOROUGH RIVER

SHEET NO. B1-05

E.C. DRIVER 4/11/2014 3:54:10 PM F:\12638901 Laurel Street Repairs\Structures\Priority2Repairs2.dgn

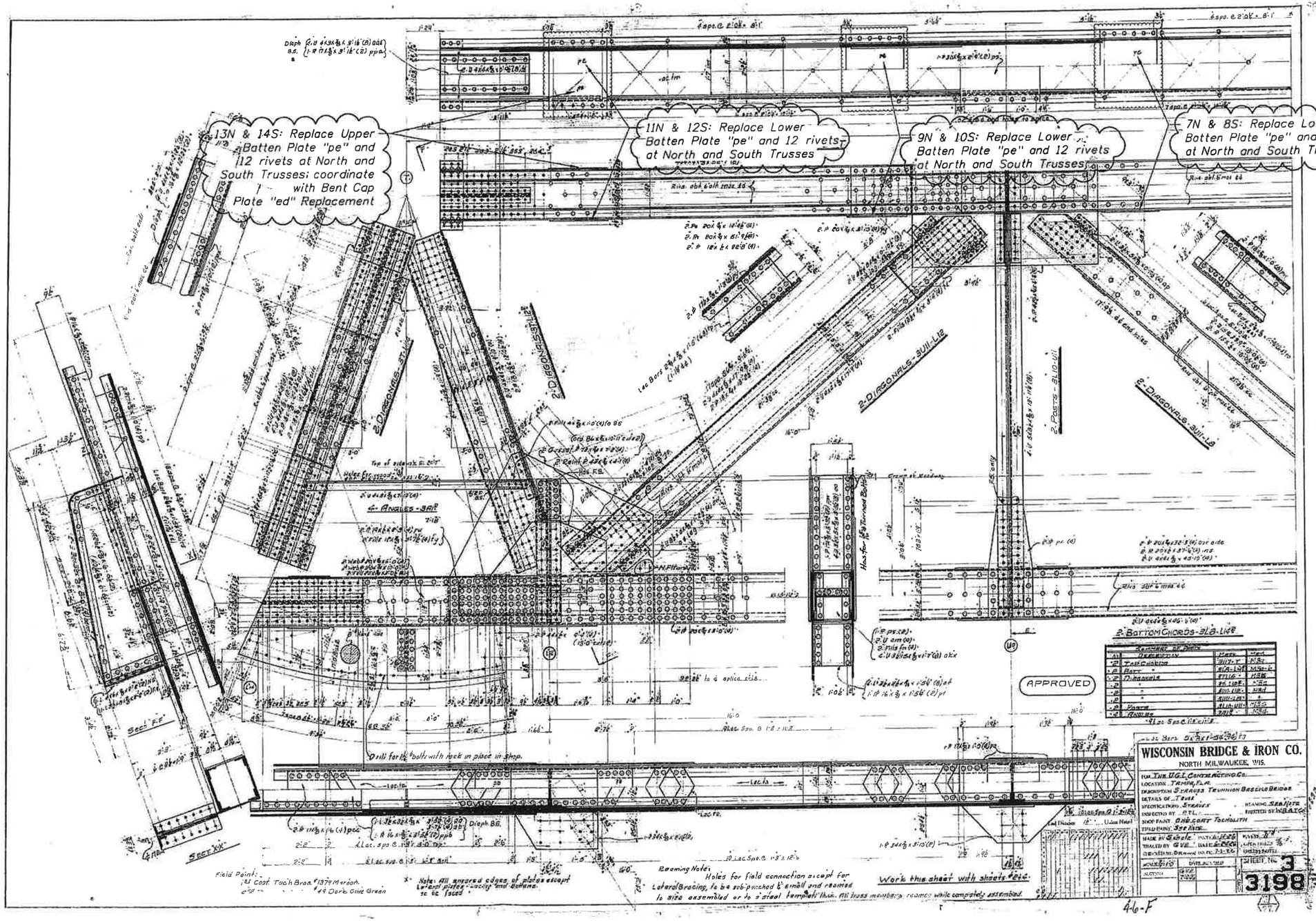

REVISIONS					
DATE	BY	DESCRIPTION	DATE	BY	DESCRIPTION

	NAMES	DATES
DRAWN BY	MJR	04-13
CHECKED BY	MJT	04-13
DESIGNED BY	MJT	04-13
CHECKED BY	TJF	04-13
APPROVED BY	Matthew J. Tuz	

ENGINEER OF RECORD:
MATTHEW J. TUZ, P.E.
P.E. License No: 40836
URS CORPORATION SOUTHERN
7650 West Courtney Campbell Causeway
Tampa, Florida 33607
Certificate of Authorization No. 0002

TRANSPORTATION DIVISION
DEPARTMENT OF PUBLIC WORKS
CITY OF TAMPA, FLORIDA

SHEET TITLE: BRIDGE REPAIR DETAILS
SHEET 3 OF 16

PROJECT NAME: LAUREL STREET BRIDGE NO. 105503
OVER THE HILLSBOROUGH RIVER

SHEET NO. B1-06

E.C. DRIVER 4/11/2014 4:00:32 PM F:\N2636901 Laurel Street Repairs\Structures\Priority2\Repairs3.dgn

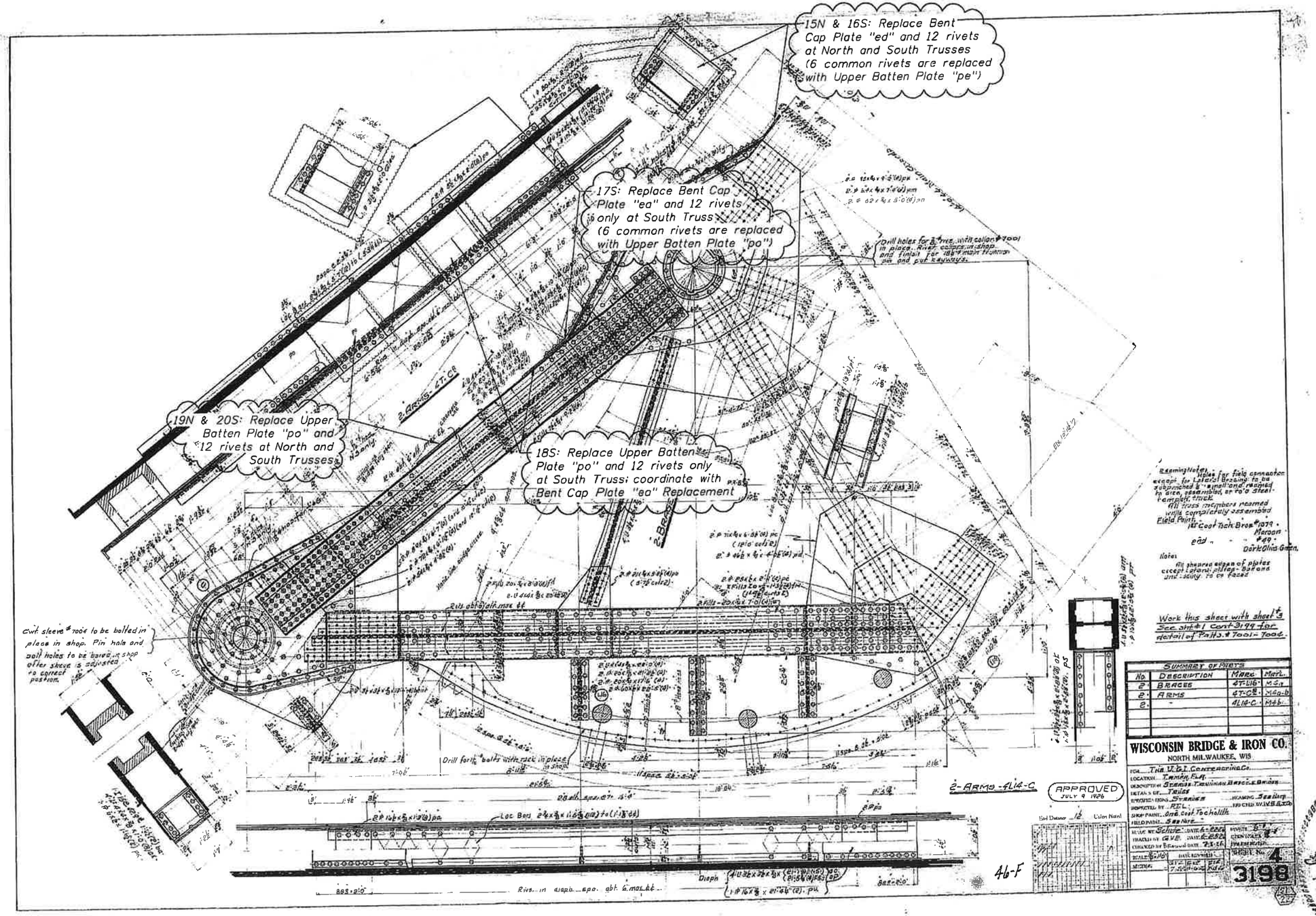

REVISIONS					
DATE	BY	DESCRIPTION	DATE	BY	DESCRIPTION

	NAMES	DATES
DRAWN BY	MJR	04-13
CHECKED BY	MJT	04-13
DESIGNED BY	MJT	04-13
CHECKED BY	TJF	04-13
APPROVED BY	Matthew J. Tuz	

ENGINEER OF RECORD:
MATTHEW J. TUZ, P.E.
P.E. License No: 40836
URS CORPORATION SOUTHERN
7650 West Courtney Campbell Causeway
Tampa, Florida 33607
Certificate of Authorization No. 0002

TRANSPORTATION DIVISION
DEPARTMENT OF PUBLIC WORKS
CITY OF TAMPA, FLORIDA

SHEET TITLE: BRIDGE REPAIR DETAILS
SHEET 4 OF 16

PROJECT NAME: LAUREL STREET BRIDGE NO. 105503
OVER THE HILLSBOROUGH RIVER

SHEET NO. B1-07

E.C. DRIVER 4/11/2014 4:06:50 PM F:\N2636501 Laurel Street Repairs\Structures\Priority2Repairs4.dgn

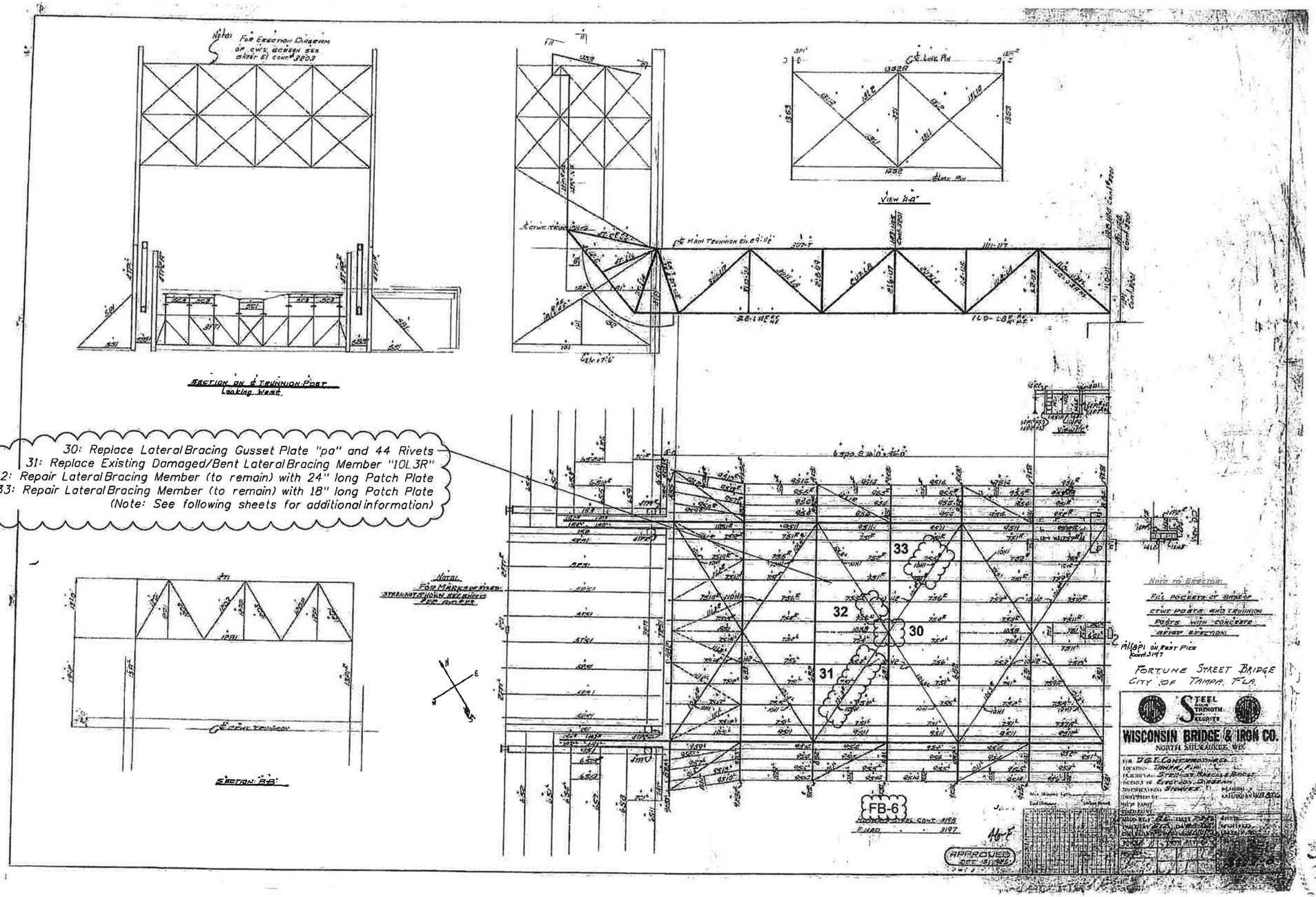

REVISIONS					
DATE	BY	DESCRIPTION	DATE	BY	DESCRIPTION

	NAMES	DATES
DRAWN BY	MJR	04-13
CHECKED BY	MJT	04-13
DESIGNED BY	MJT	04-13
CHECKED BY	TJF	04-13
APPROVED BY	Matthew J. Tuz	

ENGINEER OF RECORD:
MATTHEW J. TUZ, P.E.
P.E. License No: 40836
URS CORPORATION SOUTHERN
7650 West Courtney Campbell Causeway
Tampa, Florida 33607
Certificate of Authorization No. 0002

TRANSPORTATION DIVISION
DEPARTMENT OF PUBLIC WORKS
CITY OF TAMPA, FLORIDA

SHEET TITLE: BRIDGE REPAIR DETAILS
SHEET 5 OF 16

PROJECT NAME: LAUREL STREET BRIDGE NO. 105503
OVER THE HILLSBOROUGH RIVER

SHEET NO. B1-08

E.C. DRIVER 4/11/2014 4:12:54 PM F:\2636901 Laurel Street Repairs\Structures\Priority2Repairs5.dgn

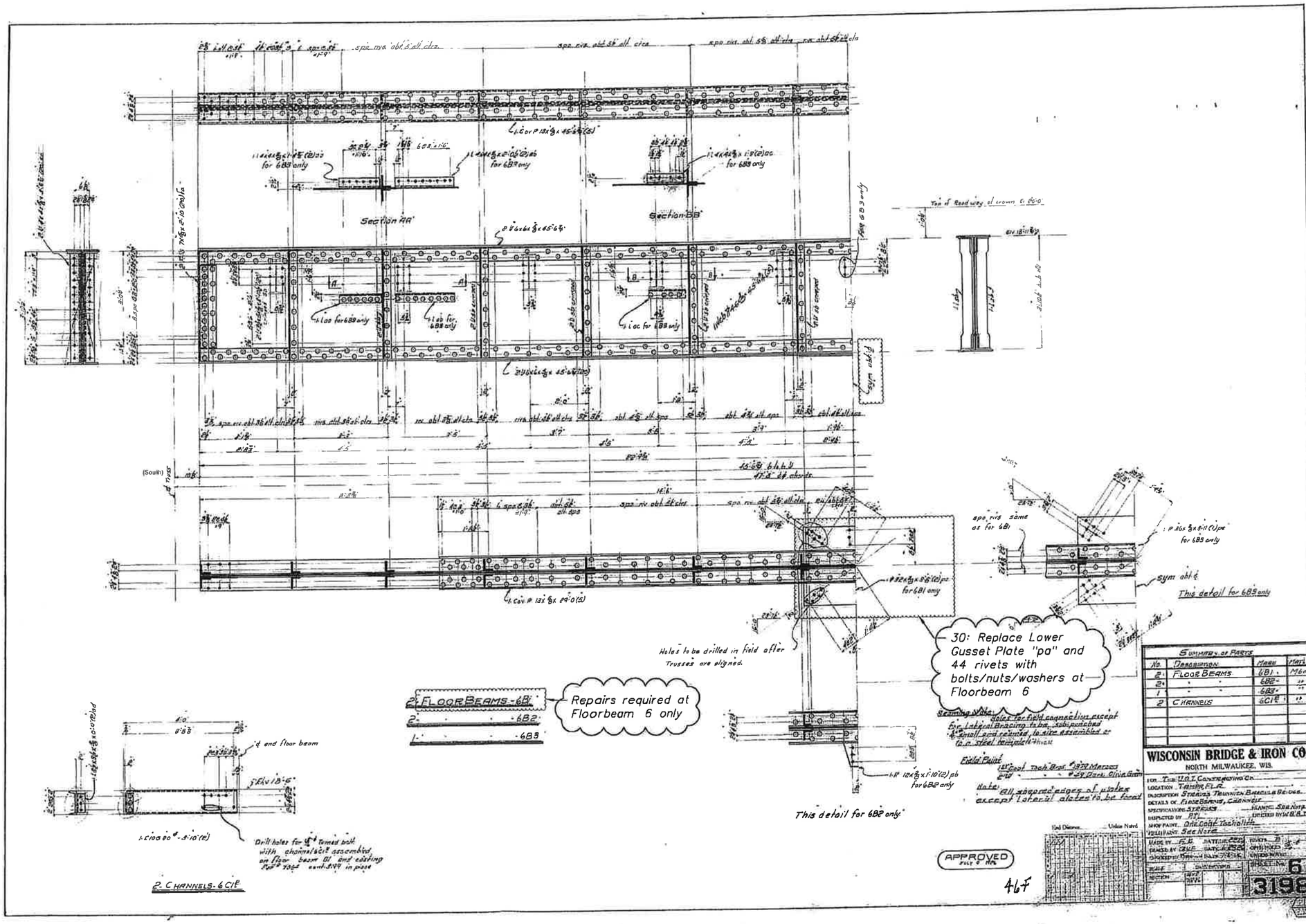

Summary of Parts			
No.	Description	Mark	Mat'l
2	Floor Beams	6B1	M6
2	" "	6B2	"
1	" "	6B3	"
2	Channels	6C1	"

WISCONSIN BRIDGE & IRON CO.
NORTH MILWAUKEE, WIS.

For	U.S. Construction Co.
Location	Tampa, Fla.
Description	Stringer Trunnion Bascule Bridge
Details of	Floor Beams, Channels
Specifications	Standard
Inspected by	N.Y.
Shop paint	One Coat Tachelith
Field paint	See Note
Made by	F.L.R.
Checked by	C.W.E.
Checked by	

Drawing No. 6
Sheet No. 3198

REVISIONS					
DATE	BY	DESCRIPTION	DATE	BY	DESCRIPTION

	NAMES	DATES
DRAWN BY	MJR	04-13
CHECKED BY	MJT	04-13
DESIGNED BY	MJT	04-13
CHECKED BY	TJF	04-13
APPROVED BY	Matthew J. Tuz	

ENGINEER OF RECORD:
MATTHEW J. TUZ, P.E.
P.E. License No: 40836
URS CORPORATION SOUTHERN
7650 West Courtney Campbell Causeway
Tampa, Florida 33607
Certificate of Authorization No. 0002

TRANSPORTATION DIVISION
DEPARTMENT OF PUBLIC WORKS
CITY OF TAMPA, FLORIDA

SHEET TITLE:
BRIDGE REPAIR DETAILS
SHEET 6 OF 16

PROJECT NAME:
LAUREL STREET BRIDGE NO. 105503
OVER THE HILLSBOROUGH RIVER

SHEET NO.
B1-09

E.C. DRIVER 4/11/2014 4:19:29 PM F:\N2636901 Laurel Street Repairs\Structures\Priority2Repairs6.dgn

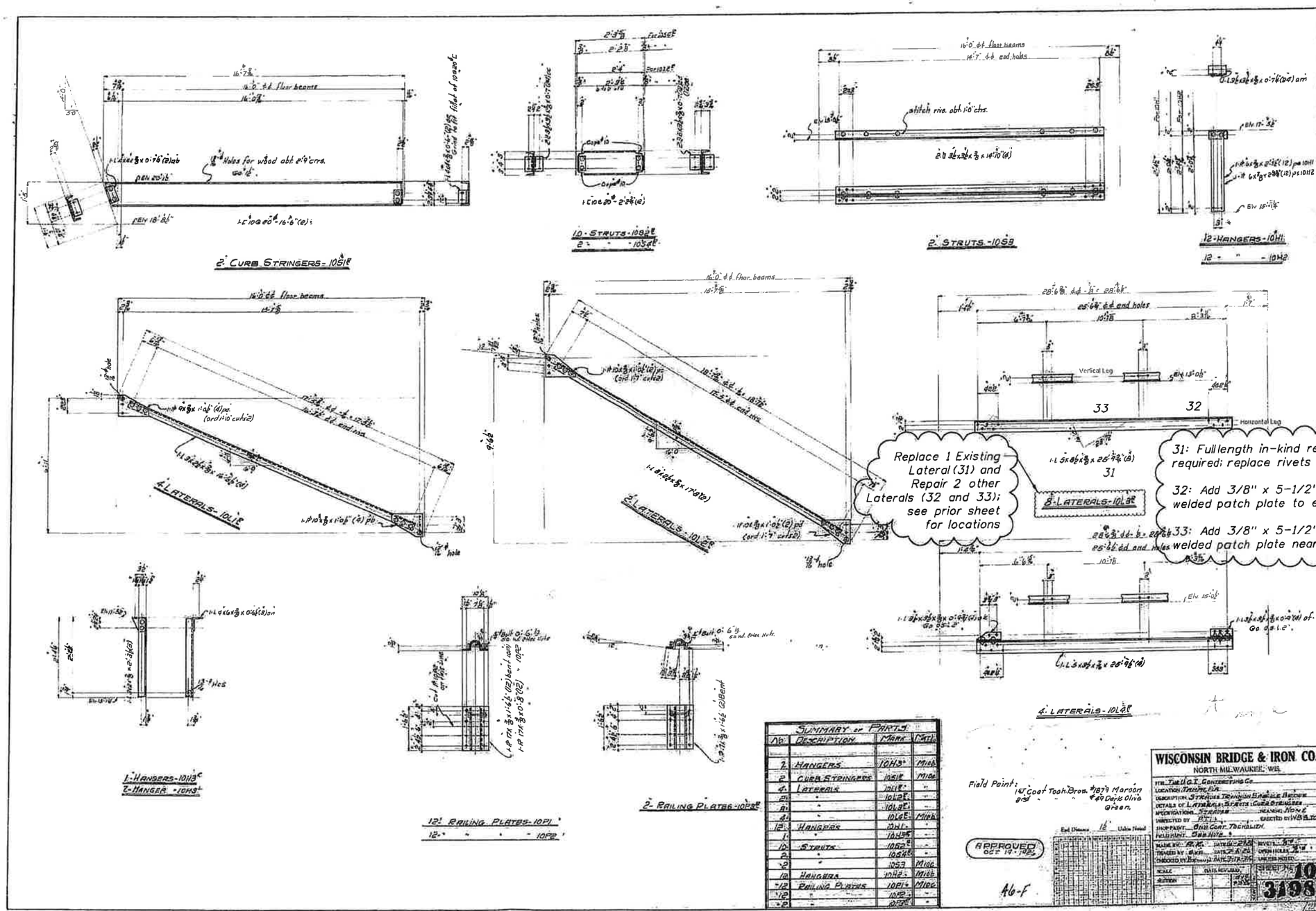

SUMMARY OF PARTS			
No.	DESCRIPTION	MARK	MAT.
2	HANGERS	10H3	M160
2	CURB STRINGERS	105I8	M160
4	LATERALS	10L8	"
2	"	10L8	"
8	"	10L8	"
4	"	10L8	M160
12	HANGERS	10H1	"
1	"	10H3	"
10	STRUTS	10S2	"
2	"	10S4	"
2	"	10S3	M160
12	HANGERS	10H2	M160
12	RAILING PLATES	10P1	M160
12	"	10P2	"
2	"	10P2	"

REVISIONS					
DATE	BY	DESCRIPTION	DATE	BY	DESCRIPTION

	NAMES	DATES
DRAWN BY	MJR	04-13
CHECKED BY	MJT	04-13
DESIGNED BY	MJT	04-13
CHECKED BY	TJF	04-13
APPROVED BY	Matthew J. Tuz	

ENGINEER OF RECORD:
MATTHEW J. TUZ, P.E.
P.E. License No: 40836
URS CORPORATION SOUTHERN
7650 West Courtney Campbell Causeway
Tampa, Florida 33607
Certificate of Authorization No. 0002

TRANSPORTATION DIVISION
DEPARTMENT OF PUBLIC WORKS
CITY OF TAMPA, FLORIDA

SHEET TITLE: BRIDGE REPAIR DETAILS
SHEET 7 OF 16

PROJECT NAME: LAUREL STREET BRIDGE NO. 105503
OVER THE HILLSBOROUGH RIVER

SHEET NO. B1-10

E.C. DRIVER 4/11/2014 4:24:37 PM F:\N2636901\Laurel Street Repairs\Structures\Priority2Repairs7.dgn

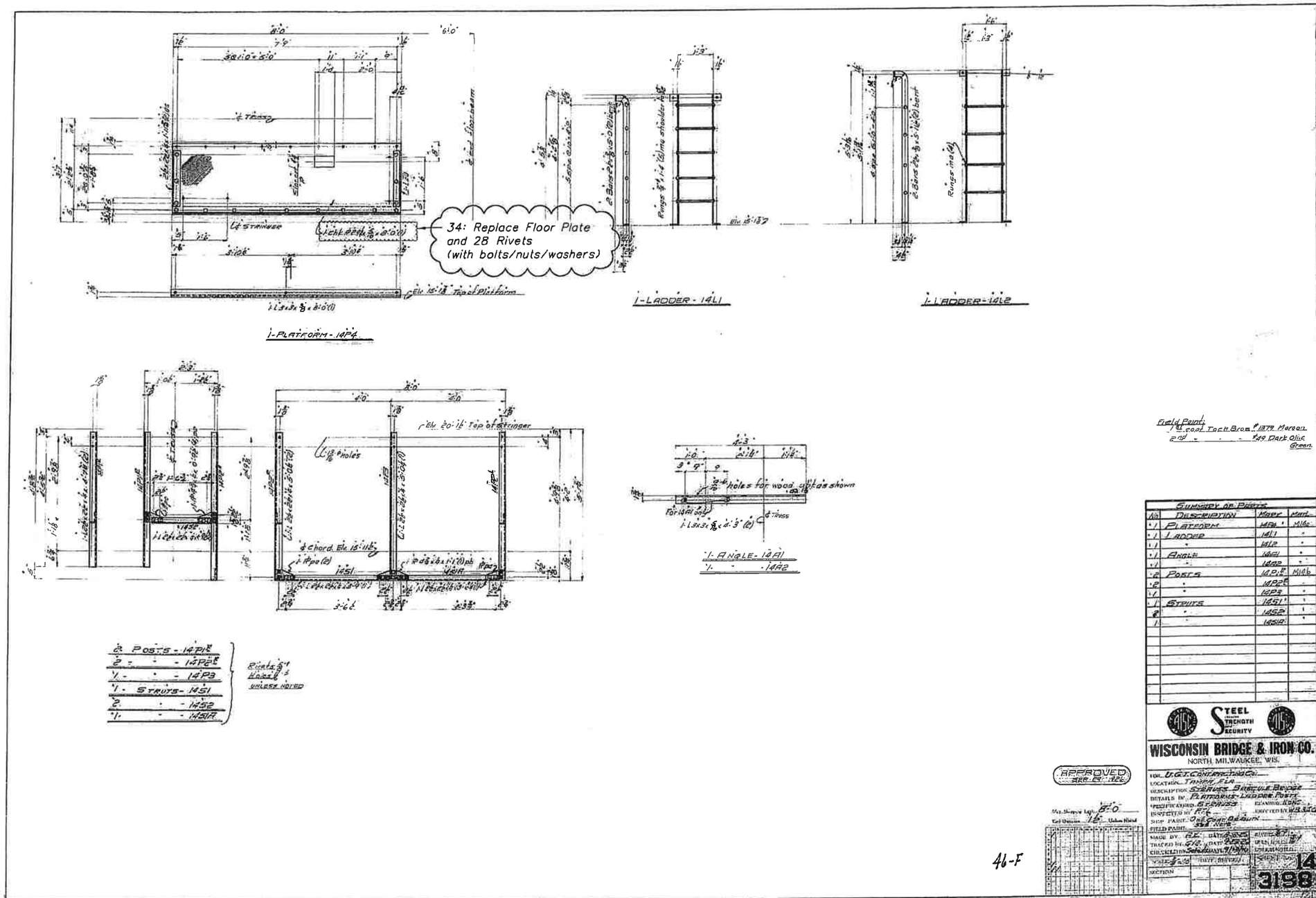

REVISIONS					
DATE	BY	DESCRIPTION	DATE	BY	DESCRIPTION

	NAMES	DATES
DRAWN BY	MJR	04-13
CHECKED BY	MJT	04-13
DESIGNED BY	MJT	04-13
CHECKED BY	TJF	04-13
APPROVED BY	Matthew J. Tuz	

ENGINEER OF RECORD:
MATTHEW J. TUZ, P.E.
P.E. License No: 40836
URS CORPORATION SOUTHERN
7650 West Courtney Campbell Causeway
Tampa, Florida 33607
Certificate of Authorization No. 0002

TRANSPORTATION DIVISION
DEPARTMENT OF PUBLIC WORKS
CITY OF TAMPA, FLORIDA

SHEET TITLE: BRIDGE REPAIR DETAILS
SHEET 8 OF 16

PROJECT NAME: LAUREL STREET BRIDGE NO. 105503
OVER THE HILLSBOROUGH RIVER

SHEET NO. B1-11

E.C. DRIVER 4/11/2014 4:30:12 PM F:\N2630901\Laurel Street Repairs\Structures\PriorHy2Repairs8.dgn

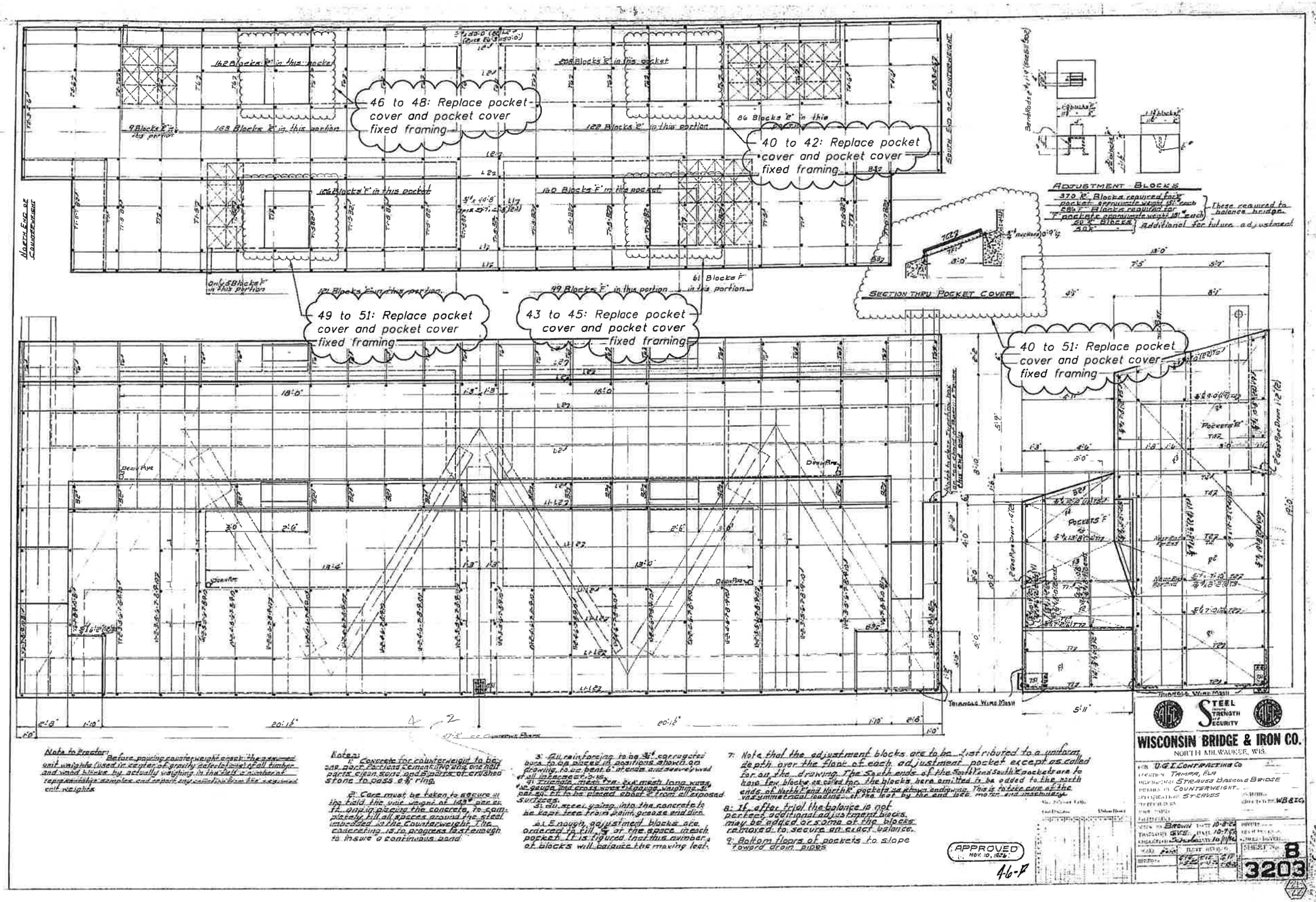

Note to Fractor: Before pouring counterweight check the exact unit weights (used in certain of gravity calculations) of all timber and wood blocks by actually weighing in the fall a number of representative samples and report any variation from the assumed unit weights.

Notes:

1: Concrete for counterweight to be one part Portland cement, two and one half parts clean sand and six parts of crushed stone to pass 3/4" ring.

2: Care must be taken to secure in the fold the unit weight of 143# per cu. ft. and in placing the concrete, to completely fill all spaces around the steel imbedded in the counterweight. The concreting is to progress fast enough to insure a continuous pour.

3: All reinforcing to be 3/8" corrugated bars to be placed in positions shown on drawing, to be bent 6" at ends and secured well in place.

4: Triangle wire fabric 3x4 mesh long wire, 16 gauge and cross wires 19 gauge, weighing .31 lbs. per sq. ft. to be placed about 2" from all exposed surfaces.

5: All steel going into the concrete to be kept free from paint, grease and dirt.

6: Enough adjustment blocks are ordered to fill 3/4 of the space in each pocket. It is figured that this number of blocks will balance the moving leaf.

7: Note that the adjustment blocks are to be distributed to a uniform depth over the floor of each adjustment pocket except as called for on the drawing. The South ends of the South End South 'F' pockets are to have few blocks as called for, the blocks here omitted to be added to the north ends of North End North 'F' pockets as shown and noted. This is to take care of the varsymmetrical loading of the leaf by the end lift motor and machinery.

8: If after trial the balance is not perfect additional adjustment blocks may be added or some of the blocks removed to secure an exact balance.

9: Bottom floors of pockets to slope toward drain pipes

REVISIONS					
DATE	BY	DESCRIPTION	DATE	BY	DESCRIPTION

	NAMES	DATES
DRAWN BY	MJR	04-13
CHECKED BY	MJT	04-13
DESIGNED BY	MJT	04-13
CHECKED BY	TJF	04-13
APPROVED BY	Matthew J. Tuz	

ENGINEER OF RECORD:
MATTHEW J. TUZ, P.E.
P.E. License No: 40836
URS CORPORATION SOUTHERN
7650 West Courtney Campbell Causeway
Tampa, Florida 33607
Certificate of Authorization No. 0002

TRANSPORTATION DIVISION
DEPARTMENT OF PUBLIC WORKS
CITY OF TAMPA, FLORIDA

SHEET TITLE: BRIDGE REPAIR DETAILS
SHEET 9 OF 16

PROJECT NAME: LAUREL STREET BRIDGE NO. 105503
OVER THE HILLSBOROUGH RIVER

SHEET NO. B1-12

E.C. DRIVER 4/11/2014 4:34:51 PM F:\26360001 Laurel Street Repairs\Structures\Priority2Repairs9.dgn

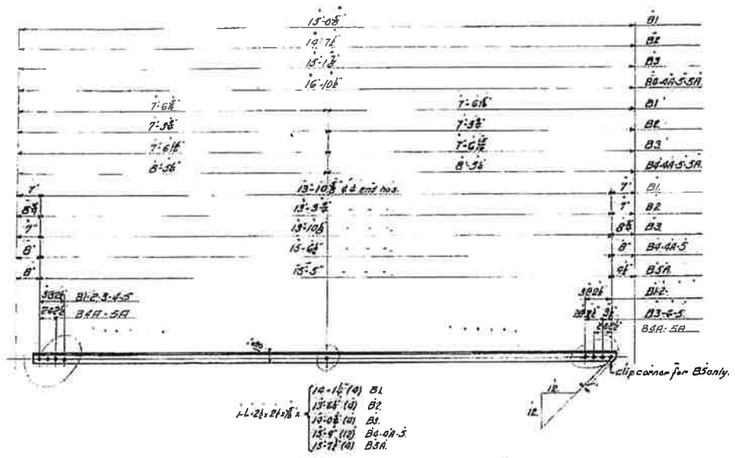

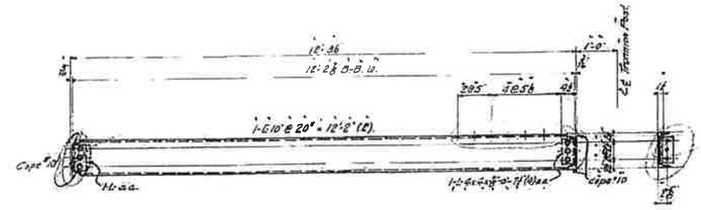

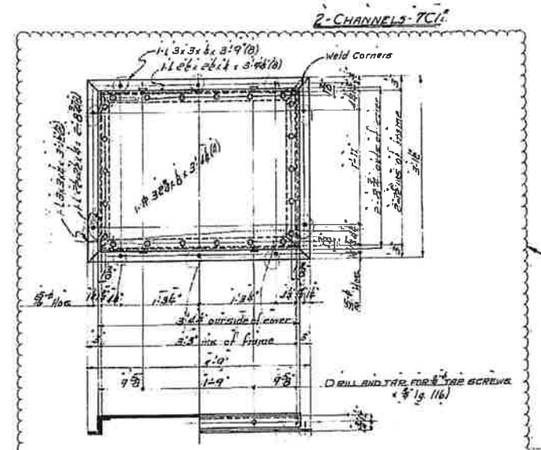

40 to 51: Replace pocket cover and pocket cover fixed framing

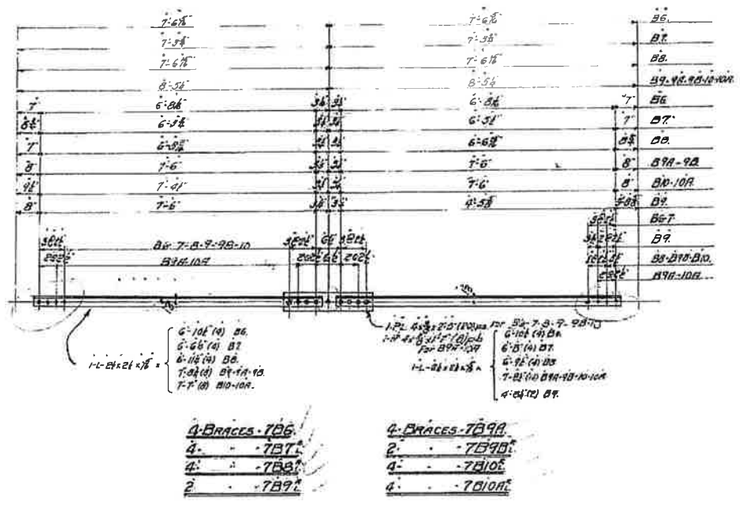

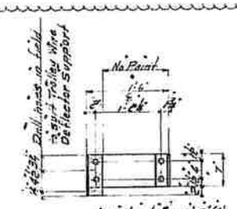

Field Paint:-
1st Coat Tech. Bros. #1379 Maroon.
2nd " " " Dark Olive Green.

APPROVED
OCT 11 1926

46-F

Summary of Parts			
No.	Description	Mark	Mat'l
4	Braces	7B1	M7A
4	-	7B2	-
4	-	7B3	-
4	-	7B4	-
4	-	7B4A	-
4	-	7B5	-
4	-	7B5A	-
4	-	7B6	-
4	-	7B7	-
4	-	7B8	-
2	-	7B9	-
4	-	7B9A	-
2	-	7B9B	-
4	-	7B10	-
4	-	7B10A	-
2	Channels	7C1	M7A
4	Frames	7F1	M7A
4	Covers	7C2	"
2	Supports	7S1	"

Steel Strength and Security

WISCONSIN BRIDGE & IRON CO.
NORTH MILWAUKEE, WIS.

For The U.G.I. Contracting Co.
Location Tampa, Fla.
Description Strauss Trunnion Bascule Bridge
Details of CWT Screen
Specification Strauss
Inspected by P.S.L.
Shop Paint One Coat Tech. Lt. Gray
Field Coat See Note
Drawn by Schutz Date 6-26-31
Checked by A.A.M. Date 8-21-31
Approved by C.M. Date 8-25-31
Scale 1/4" = 1'-0"
Drawing None
Location WBI Co.
Mfr. Serial No. 7
Contract No. 3203

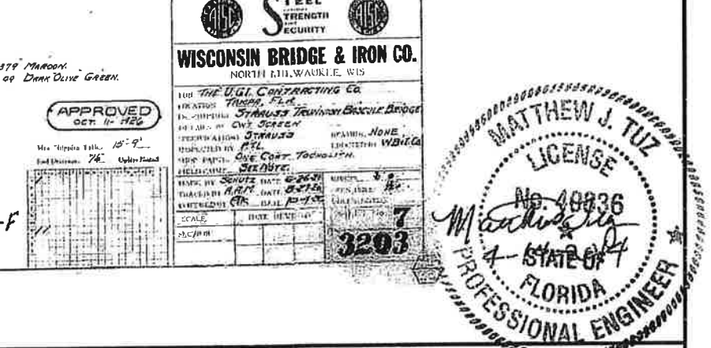

REVISIONS					
DATE	BY	DESCRIPTION	DATE	BY	DESCRIPTION

	Names	Dates
Drawn by	MJR	04-13
Checked by	MJT	04-13
Designed by	MJT	04-13
Checked by	TJF	04-13
Approved by	Matthew J. Tuz	

ENGINEER OF RECORD:
MATTHEW J. TUZ, P.E.
P.E. License No: 40836
URS CORPORATION SOUTHERN
7650 West Courtney Campbell Causeway
Tampa, Florida 33607
Certificate of Authorization No. 0002

TRANSPORTATION DIVISION
DEPARTMENT OF PUBLIC WORKS
CITY OF TAMPA, FLORIDA

Sheet Title: BRIDGE REPAIR DETAILS
SHEET 10 OF 16

Project Name: LAUREL STREET BRIDGE NO. 105503
OVER THE HILLSBOROUGH RIVER

Sheet No. B1-13

E.C. DRIVER 4/11/2014 4:37:30 PM F:\26336901 Laurel Street Repairs\Structures\PriorHy2Repairs10.dgn

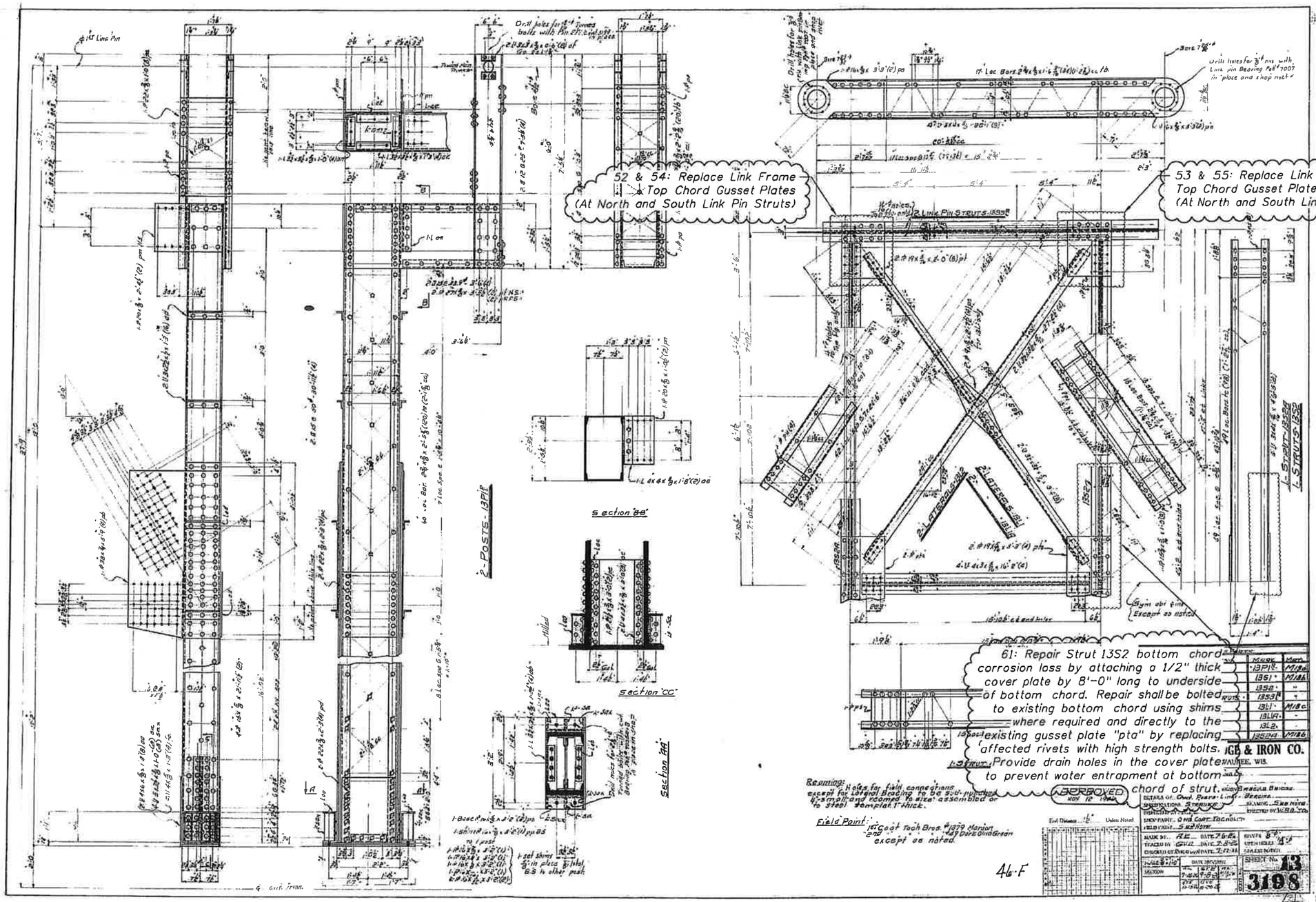

REVISIONS					
DATE	BY	DESCRIPTION	DATE	BY	DESCRIPTION

	NAMES	DATES
DRAWN BY	MJR	04-13
CHECKED BY	MJT	04-13
DESIGNED BY	MJT	04-13
CHECKED BY	TJF	04-13
APPROVED BY	Matthew J. Tuz	

ENGINEER OF RECORD:
MATTHEW J. TUZ, P.E.
P.E. License No: 40836
URS CORPORATION SOUTHERN
7650 West Courtney Campbell Causeway
Tampa, Florida 33607
Certificate of Authorization No. 0002

TRANSPORTATION DIVISION
DEPARTMENT OF PUBLIC WORKS
CITY OF TAMPA, FLORIDA

SHEET TITLE: BRIDGE REPAIR DETAILS
SHEET 11 OF 16

PROJECT NAME: LAUREL STREET BRIDGE NO. 105503
OVER THE HILLSBOROUGH RIVER

SHEET NO. B1-14

E.C. DRIVER 4/11/2014 4:39:58 PM F:\N2636901 Laurel Street Repairs\Structures\Priority2Repairs11.dgn

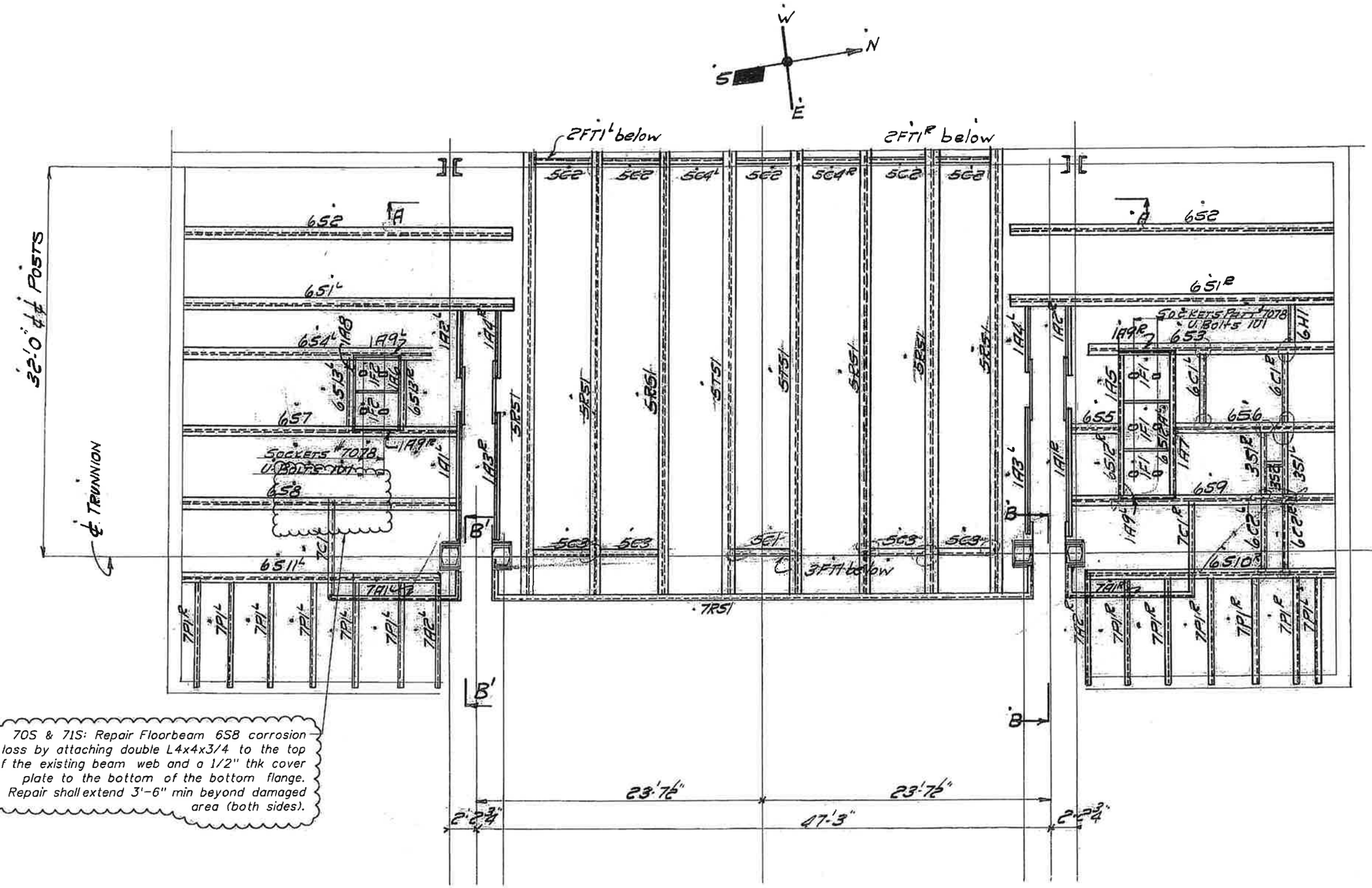

70S & 71S: Repair Floorbeam 6S8 corrosion loss by attaching double L4x4x3/4 to the top of the existing beam web and a 1/2" thk cover plate to the bottom of the bottom flange. Repair shall extend 3'-6" min beyond damaged area (both sides).

MATTHEW J. TUZ
LICENSE
No. 40836
STATE OF FLORIDA
PROFESSIONAL ENGINEER

REVISIONS					
DATE	BY	DESCRIPTION	DATE	BY	DESCRIPTION

	NAMES	DATES
DRAWN BY	MJR	04-13
CHECKED BY	MJT	04-13
DESIGNED BY	MJT	04-13
CHECKED BY	TJF	04-13
APPROVED BY	Matthew J. Tuz	

ENGINEER OF RECORD:
MATTHEW J. TUZ, P.E.
P.E. License No: 40836
URS CORPORATION SOUTHERN
7650 West Courtney Campbell Causeway
Tampa, Florida 33607
Certificate of Authorization No. 0002

TRANSPORTATION DIVISION
DEPARTMENT OF PUBLIC WORKS
CITY OF TAMPA, FLORIDA

SHEET TITLE: BRIDGE REPAIR DETAILS
SHEET 12 OF 16

PROJECT NAME: LAUREL STREET BRIDGE NO. 105503
OVER THE HILLSBOROUGH RIVER

SHEET NO. B1-15

E.C. DRIVER 4/11/2014 4:42:41 PM F:\N2636901 Laurel Street Repairs\Structures\Priority2Repairs12.dgn

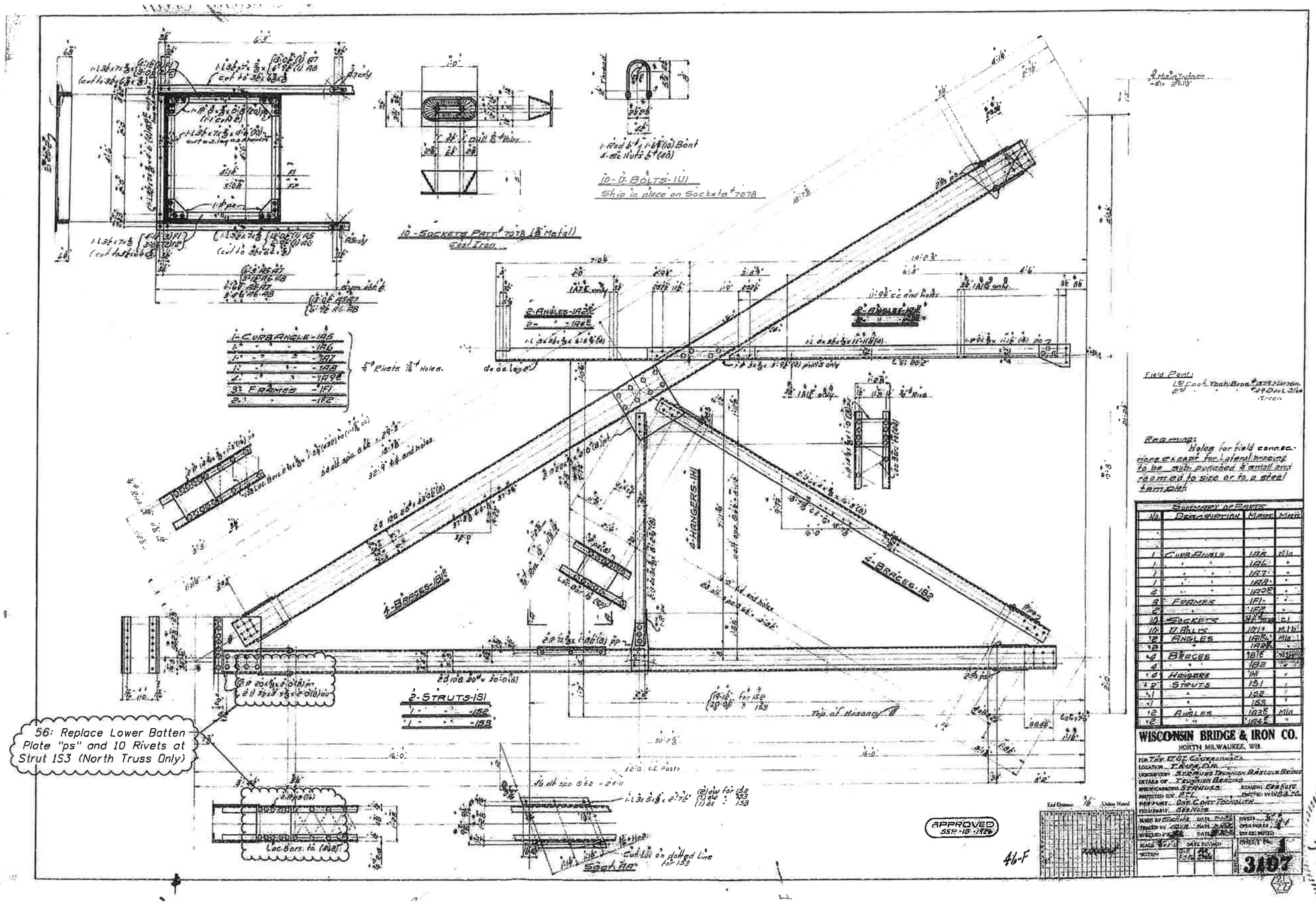

Summary of Parts			
No.	Description	Mark	Mat'l
1	Curb Angle	1R5	M1a
1	" "	1R6	"
1	" "	1R7	"
1	" "	1R8	"
4	" "	1R9	"
2	Frame	1F1	"
2	"	1F2	"
10	Sockets	707B	C.I.
10	U Bolts	1U1	M1b
12	Angles	1R6	M1a
12	"	1R7	"
4	Braces	1B1	M1a
4	"	1B2	"
2	Hangers	1H1	"
2	Struts	1S1	"
1	"	1S2	"
1	"	1S3	"
12	Angles	1R8	M1a
12	"	1R9	"

56: Replace Lower Batten Plate "ps" and 10 Rivets at Strut 1S3 (North Truss Only)

MATTHEW J. TUZ LICENSE No. 40836 STATE OF FLORIDA PROFESSIONAL ENGINEER

REVISIONS					
DATE	BY	DESCRIPTION	DATE	BY	DESCRIPTION

	NAME	DATES
DRAWN BY	MJR	04-13
CHECKED BY	MJT	04-13
DESIGNED BY	MJT	04-13
CHECKED BY	TJF	04-13
APPROVED BY	Matthew J. Tuz	

ENGINEER OF RECORD: MATTHEW J. TUZ, P.E.
P.E. License No: 40836
URS CORPORATION SOUTHERN
7650 West Courtney Campbell Causeway
Tampa, Florida 33607
Certificate of Authorization No. 0002

TRANSPORTATION DIVISION
DEPARTMENT OF PUBLIC WORKS
CITY OF TAMPA, FLORIDA

SHEET TITLE: BRIDGE REPAIR DETAILS SHEET 13 OF 16

PROJECT NAME: LAUREL STREET BRIDGE NO. 105503 OVER THE HILLSBOROUGH RIVER

SHEET NO. B1-16

E.C. DINNER 4/11/2014 4:44:09 PM F:\V263690\ Laurel Street Repairs\Structures\Priority2Repairs13.dgn

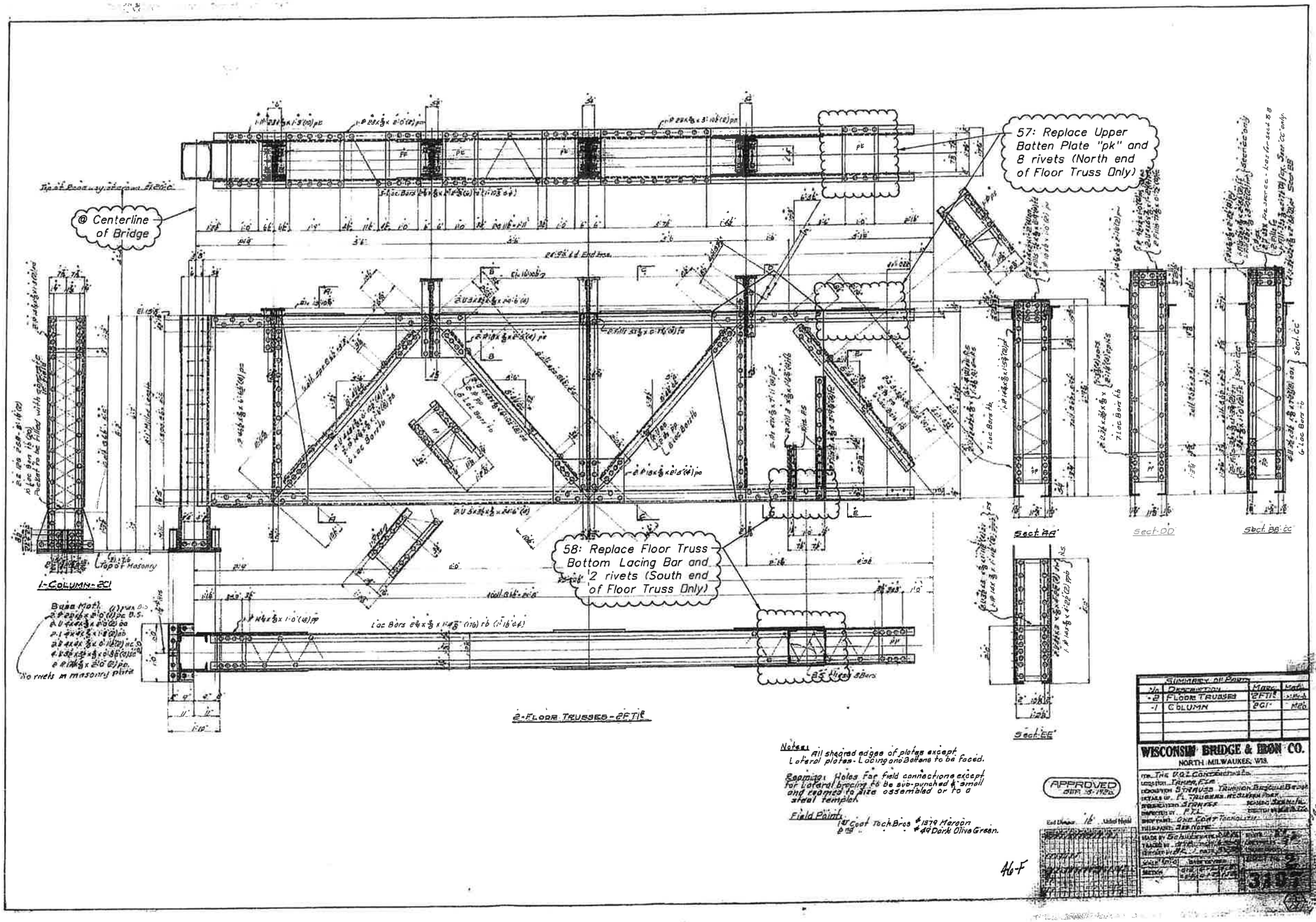

MATTHEW J. TUZ
LICENSE
No. 40836
STATE OF FLORIDA
PROFESSIONAL ENGINEER

REVISIONS					
DATE	BY	DESCRIPTION	DATE	BY	DESCRIPTION

	NAMES	DATES
DRAWN BY	MJR	04-13
CHECKED BY	MJT	04-13
DESIGNED BY	MJT	04-13
CHECKED BY	TJF	04-13
APPROVED BY	Matthew J. Tuz	

ENGINEER OF RECORD:
MATTHEW J. TUZ, P.E.
P.E. License No: 40836
URS CORPORATION SOUTHERN
7650 West Courtney Campbell Causeway
Tampa, Florida 33607
Certificate of Authorization No. 0002

TRANSPORTATION DIVISION
DEPARTMENT OF PUBLIC WORKS
CITY OF TAMPA, FLORIDA

SHEET TITLE: BRIDGE REPAIR DETAILS
SHEET 14 OF 16

PROJECT NAME: LAUREL STREET BRIDGE NO. 105503
OVER THE HILLSBOROUGH RIVER

SHEET NO. B1-17

E.C. DRIVER 4/11/2014 4:47:24 PM F:\V2536590\Laurel Street Repairs\Structures\Priority2Repairs14.dgn

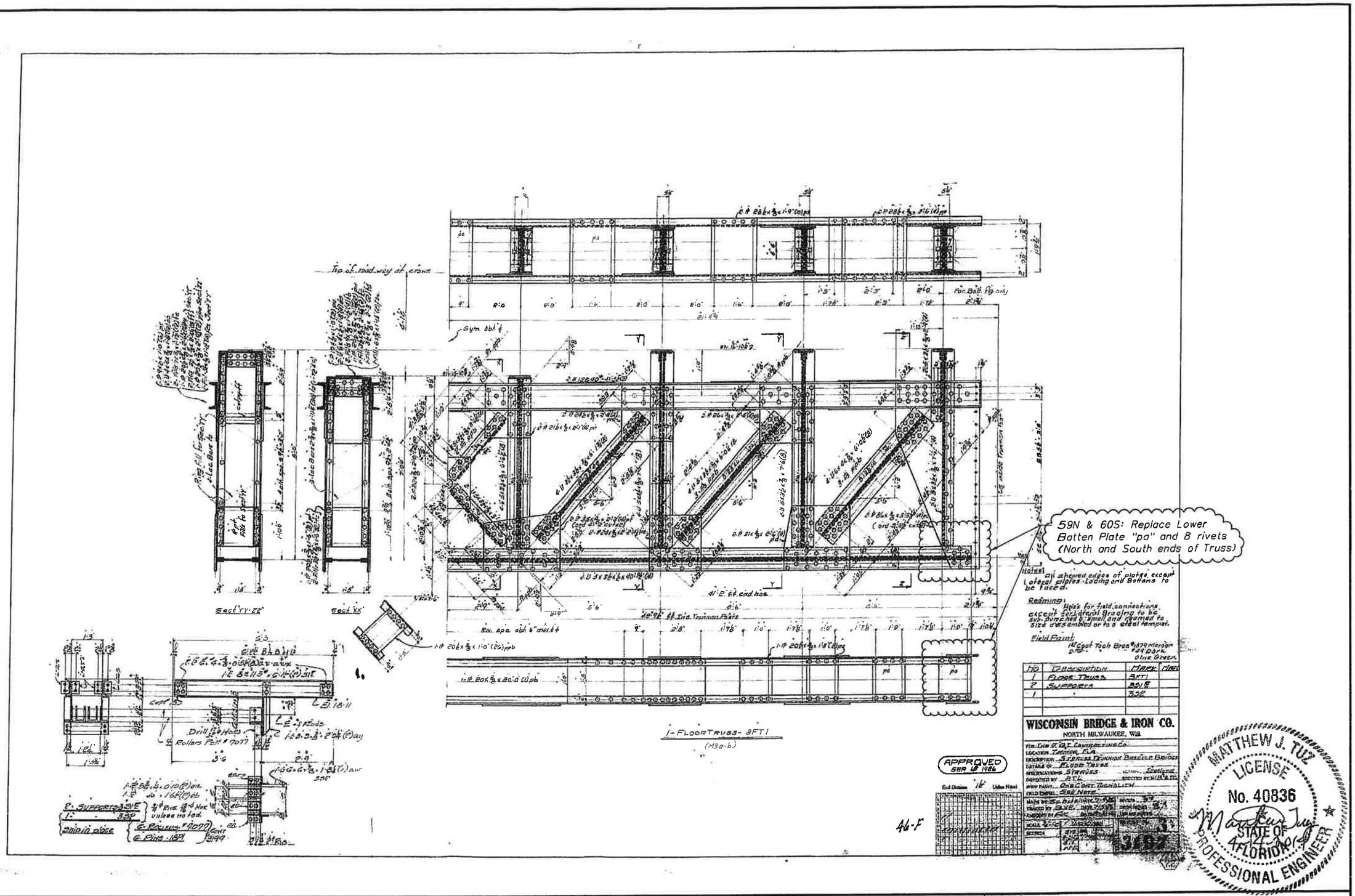

REVISIONS					
DATE	BY	DESCRIPTION	DATE	BY	DESCRIPTION

	NAMES	DATES
DRAWN BY	MJR	04-13
CHECKED BY	MJT	04-13
DESIGNED BY	MJT	04-13
CHECKED BY	TJF	04-13
APPROVED BY	Matthew J. Tuz	

ENGINEER OF RECORD:
MATTHEW J. TUZ, P.E.
P.E. License No: 40836
URS CORPORATION SOUTHERN
7650 West Courtney Campbell Causeway
Tampa, Florida 33607
Certificate of Authorization No. 0002

TRANSPORTATION DIVISION
DEPARTMENT OF PUBLIC WORKS
CITY OF TAMPA, FLORIDA

SHEET TITLE: BRIDGE REPAIR DETAILS
SHEET 15 OF 16

PROJECT NAME: LAUREL STREET BRIDGE NO. 105503
OVER THE HILLSBOROUGH RIVER

SHEET NO. BI-18

E.C. DRIVER 4/11/2014 4:49:23 PM F:\12636901 Laurel Street Repairs\Structures\Priority2Repairs\15.dgn

Quantity Calculations

URS

Project: Laurel Street Bridge
Financial Project ID: | Job No:
Designer MJR | Date 5/17/13 | Checker MJT | Date

Pay Item Description: STRUCTURAL STEEL - REHAB - CARBON
Pay Item Number: 460-1-1 | Bridge No: 105503

Units: LB | Accuracy: | LB

Item	Size	No. Required	LB
Description & Location (N = North, S = South, E = East, W = West)			
Bascule Leaf: Truss Top Chord:			
1N Lower Batten Plate "pe"	30" x 3/8" x 2'-0"	x 1	76.6 LB
2S Lower Batten Plate "pe"	30" x 3/8" x 2'-0"	x 1	76.6 LB
3N Lower Batten Plate "pk"	30" x 3/8" x 1'-9"	x 1	67.0 LB
4S Lower Batten Plate "pk"	30" x 3/8" x 1'-9"	x 1	67.0 LB
5N Lower Batten Plate "pf"	30" x 3/8" x 1'-3"	x 1	47.9 LB
6S Lower Batten Plate "pf"	30" x 3/8" x 1'-3"	x 1	47.9 LB
7N Lower Batten Plate "pe"	30" x 3/8" x 2'-0"	x 1	76.6 LB
8S Lower Batten Plate "pe"	30" x 3/8" x 2'-0"	x 1	76.6 LB
9N Lower Batten Plate "pe"	30" x 3/8" x 2'-0"	x 1	76.6 LB
10S Lower Batten Plate "pe"	30" x 3/8" x 2'-0"	x 1	76.6 LB
11N Lower Batten Plate "pe"	30" x 3/8" x 2'-0"	x 1	76.6 LB
12S Lower Batten Plate "pe"	30" x 3/8" x 2'-0"	x 1	76.6 LB
13N Upper Batten Plate "pe"	30" x 3/8" x 2'-0"	x 1	76.6 LB
14S Upper Batten Plate "pe"	30" x 3/8" x 2'-0"	x 1	76.6 LB
15N Bent Cap Plate "ed"	30" x 3/8" x 2'-0"	x 1	76.6 LB
16S Bent Cap Plate "ed"	30" x 3/8" x 2'-0"	x 1	76.6 LB
17S Bent Cap Plate "ea"	31.5" x 3/8" x 2'-0"	x 1	80.4 LB
18S Upper Batten Plate "po"	31.5" x 3/8" x 2'-0"	x 1	80.4 LB
19N Upper Batten Plate "po"	31.5" x 3/8" x 2'-0"	x 1	80.4 LB
20S Upper Batten Plate "po"	31.5" x 3/8" x 2'-0"	x 1	80.4 LB
Bascule Leaf: Truss Bottom Chord:			
21N Lower Gusset Plate "ppc"	34" x 3/8" x 2'-11"	x 1	126.5 LB
22S Lower Batten Plate "pn"	18" x 3/8" x 2'-1"	x 1	47.9 LB
23S Lower Gusset Plate "po"	34" x 3/8" x 37.5"	x 1	135.6 LB
24-29 NOT USED			
Bascule Leaf: Superstructure Framing:			
30 Lateral Bracing Gusset Plate "pa" (FB6 mid)	32" x 3/8" x 44"	x 1	149.7 LB
31 Lateral Brace "10L3R" (Btw FB6 mid and FB8 S)	L5x3.5x3/8 by 25'-9.75" Long	x 1	268.5 LB
32 Patch Plate (Btw FB6 mid and FB8 N)	5.5" x 3/8" x 2'-0"	x 1	14.0 LB
33 Patch Plate (Btw FB6 mid and FB4 N)	5.5" x 3/8" x 1'-6"	x 1	10.5 LB
34 Span Lock Floor Plate (Btw L2 and L0 North)	29.25" x 5/16" x 8'-0"	x 1	248.8 LB
35-39 NOT USED			
Bascule Pier: Counterweight Truss Tower Framing:			
40 Cwt Pocket Cover Plate (NW corner)	32.75" x 1/8" x 40.25"	x 1	46.7 LB
41 Cwt Pocket Cover Remov. Frame (NW corner)	L2.5 x 2.5 x 1/4 x 11'-2" Tot L	x 1	45.8 LB
42 Cwt Pocket Cover Fixed Frame (NW corner)	L3 x 3 x 1/4 x 12.75' Tot L	x 1	62.5 LB
43 Cwt Pocket Cover Plate (NE corner)	32.75" x 1/8" x 40.25"	x 1	46.7 LB
44 Cwt Pocket Cover Remov. Frame (NE corner)	L2.5 x 2.5 x 1/4 x 11'-2" Tot L	x 1	45.8 LB
45 Cwt Pocket Cover Fixed Frame (NE corner)	L3 x 3 x 1/4 x 12.75' Tot L	x 1	62.5 LB
46 Cwt Pocket Cover Plate (SW corner)	32.75" x 1/8" x 40.25"	x 1	46.7 LB
47 Cwt Pocket Cover Remov. Frame (SW corner)	L2.5 x 2.5 x 1/4 x 11'-2" Tot L	x 1	45.8 LB
48 Cwt Pocket Cover Fixed Frame (SW corner)	L3 x 3 x 1/4 x 12.75' Tot L	x 1	62.5 LB
49 Cwt Pocket Cover Plate (SE corner)	32.75" x 1/8" x 40.25"	x 1	46.7 LB
50 Cwt Pocket Cover Remov. Frame (SE corner)	L2.5 x 2.5 x 1/4 x 11'-2" Tot L	x 1	45.8 LB
51 Cwt Pocket Cover Fixed Frame (SE corner)	L3 x 3 x 1/4 x 12.75' Tot L	x 1	62.5 LB
52 Link Frame Gusset Plate (NW corner)	24" x 19" x 5/16"	x 1	40.4 LB
53 Link Frame Gusset Plate (NE corner)	24" x 19" x 5/16"	x 1	40.4 LB
54 Link Frame Gusset Plate (SW corner)	24" x 19" x 5/16"	x 1	40.4 LB
55 Link Frame Gusset Plate (SE corner)	24" x 19" x 5/16"	x 1	40.4 LB
56 Trunnion Bracing Strut 1S3 Lower Batten Plate "ps"	14.75" x 3/8" x 1'-3"	x 1	23.5 LB
57 Floor Truss 2FT1R Upper Batten Plate "pk"	23" x 3/8" x 1'-3"	x 1	36.7 LB
58 Floor Truss 2FT1L Bottom Lacing Bar	2.75" x 3/8" x 1'-4 7/8"	x 1	5.0 LB
59N Floor Truss 3FT1 Lower Batten Plate "pa"	20.5" x 3/8" x 1'-3"	x 1	32.7 LB
60S Floor Truss 3FT1 Lower Batten Plate "pa"	20.5" x 3/8" x 1'-3"	x 1	32.7 LB
61 Strut 13S2 Bottom Chord Strengthening	9" x 1/2" x 8'-0"	x 1	122.5 LB
62-69 NOT USED			
Bascule Pier: Sdwlk & Mech Room Framing:			
70S Floorbeam 6S8 Top Flange Strengthening	L4x4x3/4 by 8'-0"	x 2	296.0 LB
71S Floorbeam 6S8 Bottom Flange Strengthening	6" x 1/2" x 8'-0"	x 1	81.7 LB
		TOTAL Carbon Steel =	3885 LB

Quantity Calculations

URS

Project: Laurel Street Bridge
Financial Project ID: | Job No:
Designer MJR | Date 5/17/13 | Checker MJT | Date

Pay Item Description: RIVET/HIGH STRENGTH BOLT REPLACEMENT
Pay Item Number: 460-81 | Bridge No: 105503

Units: EA | Accuracy: | 1

Item	Size	No. Required	
Description & Location			
Bascule Leaf: North Truss Bottom Chord:			
Lower Gusset Plate "ppb" Replace bolts @ L6		x 18	
Bascule Leaf: South Truss Bottom Chord:			
Lower Gusset Plate "ppb" Replace bolts @ L6		x 18	
		TOTAL No. of Bolts =	36

MATTHEW J. TUZ
LICENSE
No. 40836
STATE OF FLORIDA
PROFESSIONAL ENGINEER

REVISIONS					
DATE	BY	DESCRIPTION	DATE	BY	DESCRIPTION

	NAMES	DATES
DRAWN BY	MJR	04-13
CHECKED BY	MJT	04-13
DESIGNED BY	MJT	04-13
CHECKED BY	TJF	04-13
APPROVED BY	Matthew J. Tuz	

ENGINEER OF RECORD:
MATTHEW J. TUZ, P.E.
P.E. License No: 40836
URS CORPORATION SOUTHERN
7650 West Courtney Campbell Causeway
Tampa, Florida 33607
Certificate of Authorization No. 0002

TRANSPORTATION DIVISION
DEPARTMENT OF PUBLIC WORKS
CITY OF TAMPA, FLORIDA

SHEET TITLE: BRIDGE REPAIR DETAILS
SHEET 16 OF 16

PROJECT NAME: LAUREL STREET BRIDGE NO. 105503
OVER THE HILLSBOROUGH RIVER

SHEET NO. BI-19

E.C. DRIVER 4/11/2014 4:51:08 PM F:\N263690\Laurel Street Repairs\Structures\Priority2Repairs\16.dgn

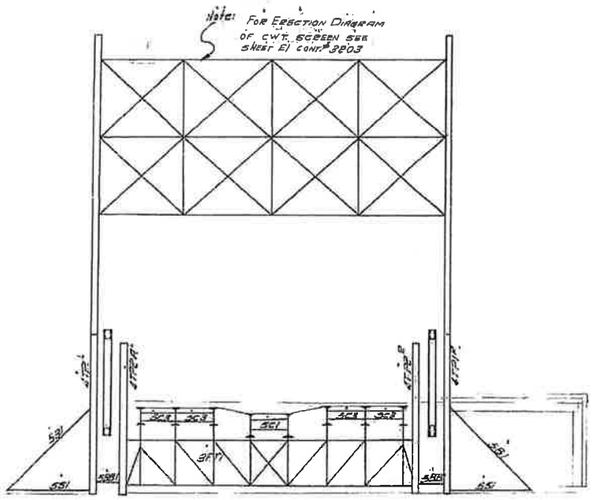

SECTION ON ℄ TRUNNION POST
Looking West

Pay Item Description:	STRUCTURAL STEEL - REHAB - MISCELLANEOUS			
Pay Item Number:	460-1-15		Bridge No:	105503
Units:	LB	Accuracy:	LB	
Description & Location				
Bascule Leaf Pedestrian Railing:				
I.D	Orig. Plans Mark			
A	P1	Pedestrian Rail End Vert (3" Std)	7.58 plf x 2'-6"	x 4	76
B	P2, P3	Pedestrian Rail Post (3" Std)	7.58 plf x 5'-4" each	x 14	566
C	P4	Pedestrian Rail Post (3" Std)	7.58 plf x 4'-7" each	x 12	417
D	9, 8, 7, 6	Pedestrian Rail Top Rail (3" Std)	7.58 plf x 101'	x 2	1531
E	10, 11, 12, 13	Pedestrian Rail Mid Rail (2" Std)	3.65 plf x 101'	x 2	737
F	10, 11, 12, 13	Pedestrian Rail Bottom Rail (2" Std)	3.65 plf x 101'	x 2	737
G		Pedestrian Rail Top Trim Bar	1.5" x 1/2" x 101'	x 2	516
H		Pedestrian Rail Bottom Trim Bar	1.5" x 1/2" x 101'	x 2	516
J		Pedestrian Rail Arch Bent Bar	5/8" x 5/8" x 41.2" long	x 200	913
			TOTAL Miscellaneous Steel =		6009 LB

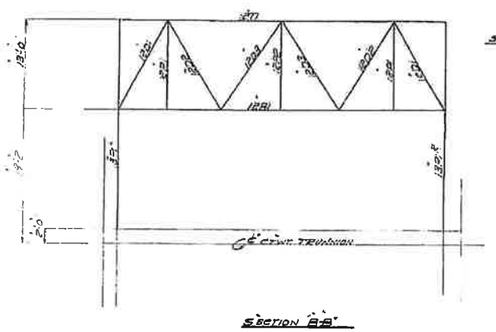

SECTION "B-B"

NOTE:
FOR MARKS OF FIXED STEEL HOT SHOWN SEE PLANS FOR CONT.# E3

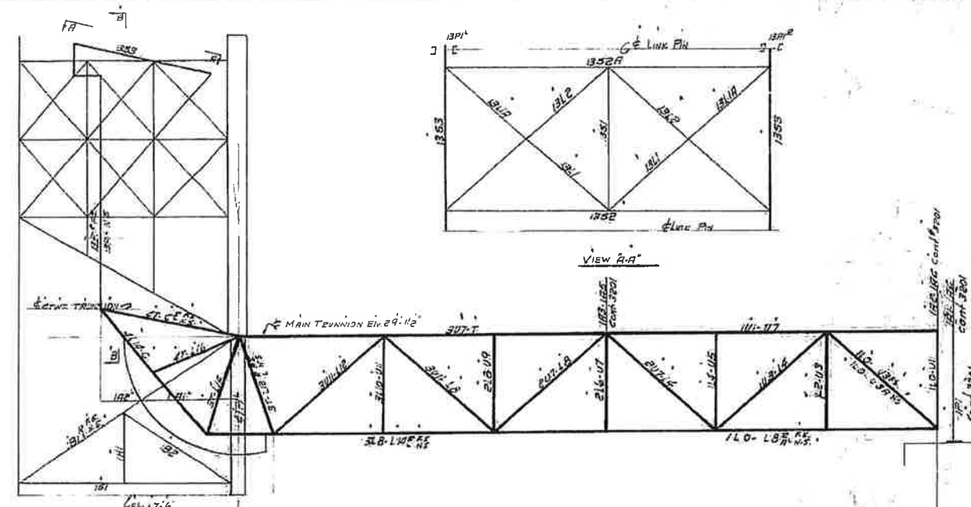

VIEW "A-A"

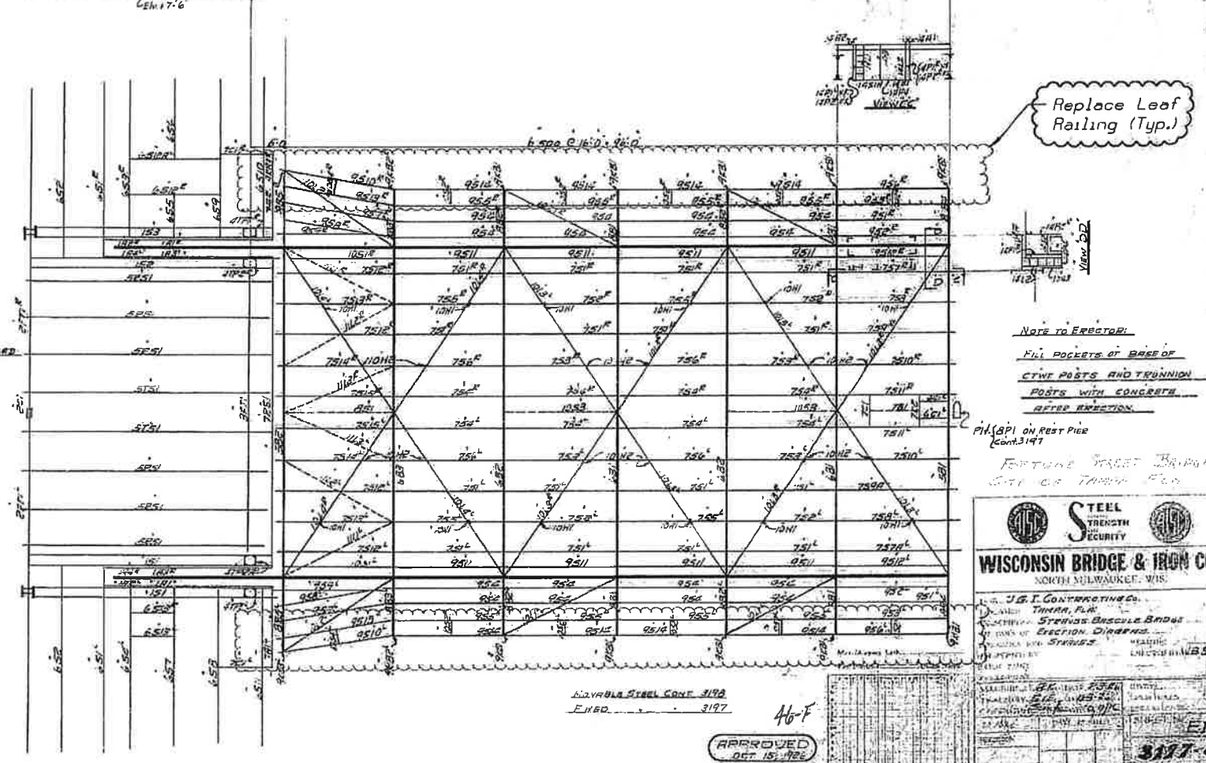

Note to Erector:
Fill pockets of base of CTWT posts and trunnion posts with concrete after erection.

WISCONSIN BRIDGE & IRON CO.
NORTH MILWAUKEE, WIS.

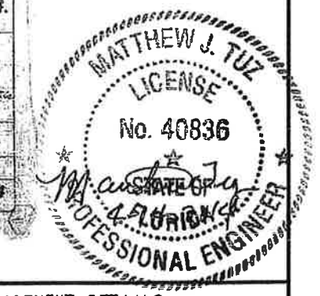

REVISIONS					
DATE	BY	DESCRIPTION	DATE	BY	DESCRIPTION

	NAMES	DATES
DRAWN BY	MJR	04-13
CHECKED BY	MJT	04-13
DESIGNED BY	MJT	04-13
CHECKED BY	TJF	04-13
APPROVED BY	Matthew J. Tuz	

ENGINEER OF RECORD:
MATTHEW J. TUZ, P.E.
P.E. License No: 40836
URS CORPORATION SOUTHERN
7650 West Courtney Campbell Causeway
Tampa, Florida 33607
Certificate of Authorization No. 0002

TRANSPORTATION DIVISION
DEPARTMENT OF PUBLIC WORKS
CITY OF TAMPA, FLORIDA

SHEET TITLE: LEAF RAILING REPLACEMENT DETAILS
SHEET 1 OF 2

PROJECT NAME: LAUREL STREET BRIDGE NO. 105503
OVER THE HILLSBOROUGH RIVER

SHEET NO. B1-20

E.C. DRIVER 4/11/2014 4:52:44 PM F:\N26\36901 Laurel Street Repairs\Structures\Priority2Repairs\7.dgn

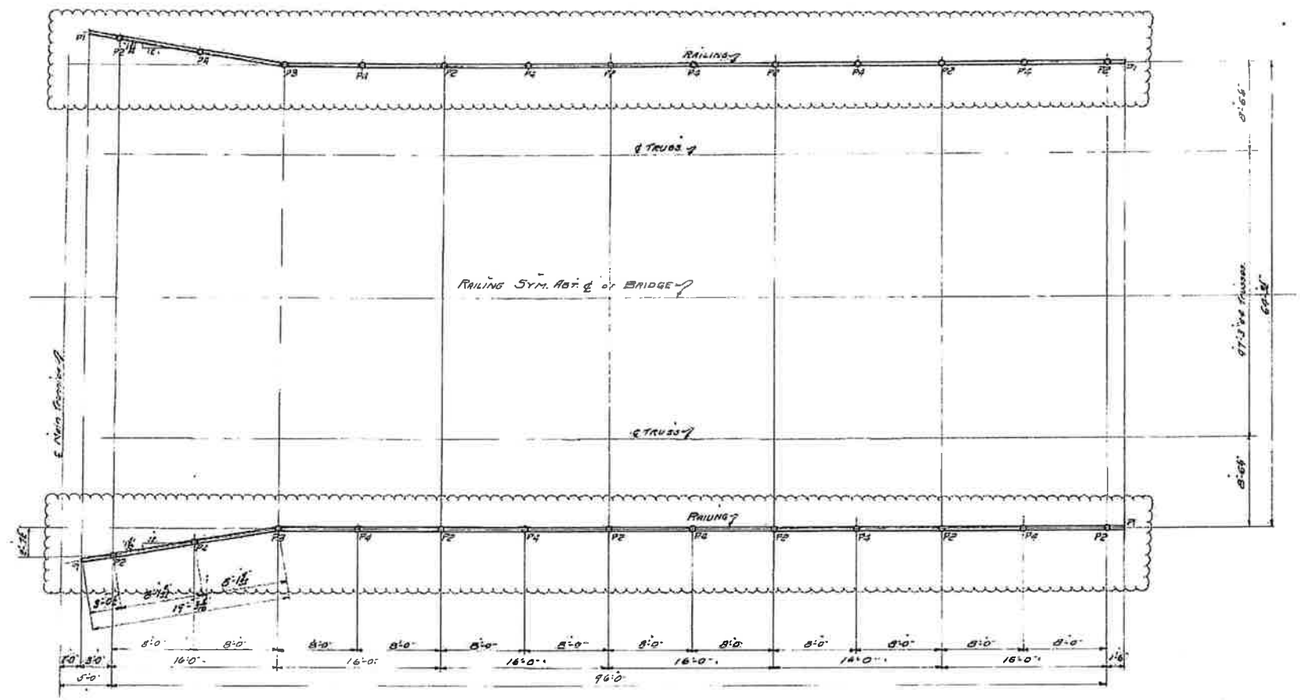

PLAN OF RAILING

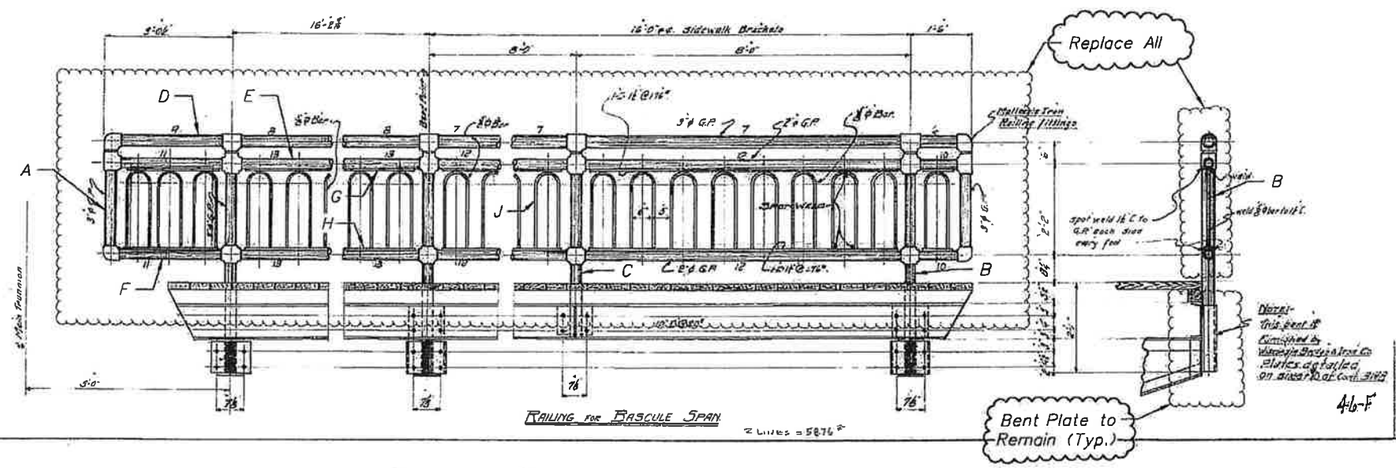

RAILING FOR BASCULE SPAN

2 Lines = 5876#

Paint Notes:
Handrailing to be painted in the shop with one coat of Tremclad paint and in the field with two coats of Tnemec Bros. paint namely 1st Coat "Red Mahogany" 2nd " " of Dark Olive Green.

APPROVED SEP 15 1926

STEEL STRENGTH SECURITY

WISCONSIN BRIDGE & IRON CO.
NORTH MILWAUKEE, WIS.

FOR The U.G.I. Contracting Co.
LOCATION Tampa, Fla.
DESCRIPTION Tampa Bascule Bridge
DETAILS OF Railing
SPECIFICATIONS Standard
INSPECTED BY R.T.L.
SHOP PAINT See Note
FIELD PAINT See Note
MADE BY A.L. DATE 8-
TRACED BY A.R.M. DATE 9-5-26
CHECKED BY Original DATE 9-9-26
SCALE
DATE INSPECTED
SHEET 3200

MATTHEW J. TUZ
LICENSE
No. 40836
STATE OF FLORIDA
PROFESSIONAL ENGINEER

REVISIONS					
DATE	BY	DESCRIPTION	DATE	BY	DESCRIPTION

	NAMES	DATES
DRAWN BY	MJR	04-13
CHECKED BY	MJT	04-13
DESIGNED BY	MJT	04-13
CHECKED BY	TJF	04-13
APPROVED BY	Matthew J. Tuz	

ENGINEER OF RECORD:
MATTHEW J. TUZ, P.E.
P.E. License No: 40836
URS CORPORATION SOUTHERN
7650 West Courtney Campbell Causeway
Tampa, Florida 33607
Certificate of Authorization No. 0002

TRANSPORTATION DIVISION
DEPARTMENT OF PUBLIC WORKS
CITY OF TAMPA, FLORIDA

SHEET TITLE: LEAF RAILING REPLACEMENT DETAILS
SHEET 2 OF 2

PROJECT NAME: LAUREL STREET BRIDGE NO. 105503
OVER THE HILLSBOROUGH RIVER

SHEET NO. B1-21

E.C. DRIVER 4/11/2014 4:55:09 PM F:\2636901\Laurel Street Repairs\Structures\Priority2Repairs18.dgn

CITY OF TAMPA

BRIDGE CONTROL HOUSE REPAIRS

LAUREL STREET BRIDGE REPAIRS
BRIDGE NO. 105503

CITY PROJECT NO. 0000082

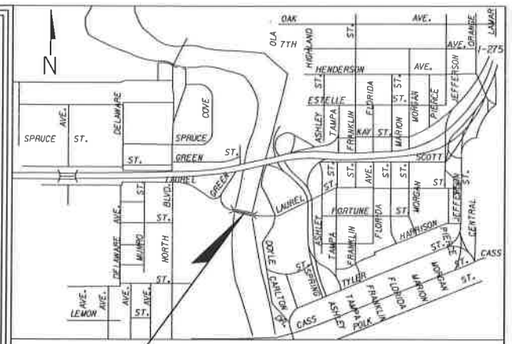

PROJECT LOCATION

VICINITY MAP

0 1000 2000 FT

INDEX OF DRAWINGS

SHEET NO.		DESCRIPTION
1	AG-001	SUMMARY OF PAY ITEMS
2	AA-101	FIRST AND SECOND FLOOR PLANS
3	AA-102	ROOF PLAN AND ROOF FRAMING PLAN
4	AA-201	EXTERIOR ELEVATIONS, WINDOW, DOOR AND FRAME TYPES
5	AA-401	ENLARGED TLT PLAN, TLT ELEVATIONS, PLUMBING FIXTURE AND TLT ACCESSORIES SCHEDULE
6	AA-601	FIRST AND SECOND FLOOR POWER AND LIGHTING PLANS AND LIGHT FIXTURE LEGEND

REVISIONS

DATE	BY	DESCRIPTION

APRIL 2014

TRANSPORTATION DEPARTMENT

CITY OF TAMPA, FLORIDA

GOVERNING STANDARDS AND SPECIFICATIONS:

FLORIDA DEPARTMENT OF TRANSPORTATION, 2014 DESIGN STANDARDS AND REVISED INDEX DRAWINGS AS APPENDED HEREIN, AND 2014 STANDARD SPECIFICATIONS FOR ROAD AND BRIDGE CONSTRUCTION, AS AMENDED BY CONTRACT DOCUMENTS.

FOR DESIGN STANDARDS CLICK ON THE "DESIGN STANDARDS" LINK AT THE FOLLOWING WEB SITE:
http://www.dot.state.fl.us/rddesign/
DESIGN STANDARDS

FOR THE STANDARD SPECIFICATIONS FOR ROAD AND BRIDGE CONSTRUCTION CLICK ON THE "SPECIFICATIONS" LINK AT THE FOLLOWING WEB SITE:
http://www.dot.state.fl.us/specificationsoffice/
STANDARD SPECIFICATIONS

ATTENTION IS DIRECTED TO THE FACT THAT THESE PLANS HAVE BEEN REDUCED IN SIZE BY REPRODUCTION. THIS MUST BE CONSIDERED WHEN OBTAINING SCALED DATA

APPROVED BY:

ALTAF BUKHARI, P.E.
PROJECT MANAGER
TRANSPORTATION DEPARTMENT

CERTIFICATION

Sheet 1 to 6 inclusive, Certified By:

4/14/14

ARNALDO HERNANDEZ
AR No. 9893

PAY ITEM #	PAY ITEM DESCRIPTION	UNIT	QUANTITY
0512-1-1	MOVABLE BRIDGE CONTROL HOUSE, RENOVATE	LS	1

STATE OF FLORIDA
ALDO HERNANDEZ

REVISIONS					
DATE	BY	DESCRIPTION	DATE	BY	DESCRIPTION

	NAME	DATE
DRAWN BY		
CHECKED BY		
DESIGNED BY		
CHECKED BY		
APPROVED BY		

ENGINEER OF RECORD:
LAURA ALDO HERNANDEZ
P.E. License No. 58993
URS CORPORATION SOUTHERN
7650 West Courtney Campbell Causeway
Tampa, Florida 33607
Certificate of Authorization No. 0002

TRANSPORTATION DIVISION
DEPARTMENT OF PUBLIC WORKS
CITY OF TAMPA, FLORIDA

SHEET TITLE: SUMMARY OF PAY ITEMS

PROJECT NAME: LAUREL STREET BRIDGE NO. 105503 OVER THE HILLSBOROUGH RIVER

AG-001

SHEET NO. 1

URS CORPORATION

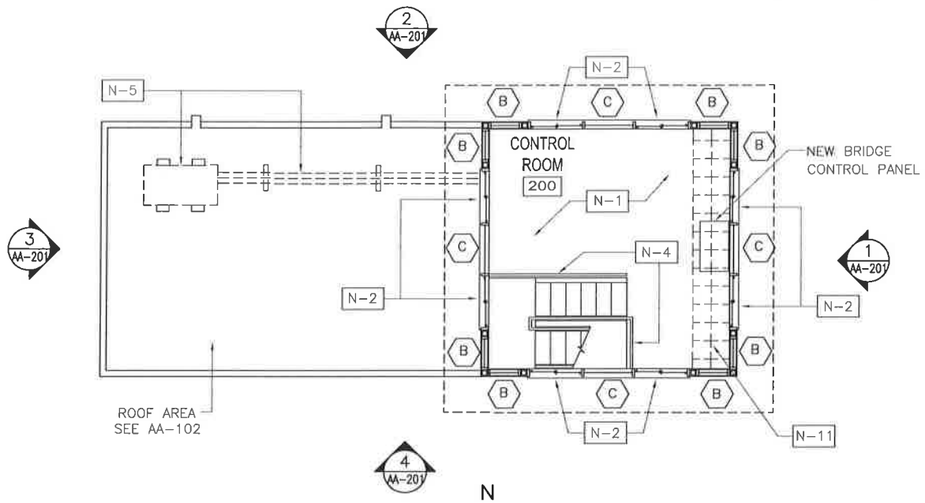

2 AA-101 SECOND FLOOR PLAN

1/4" = 1'-0"

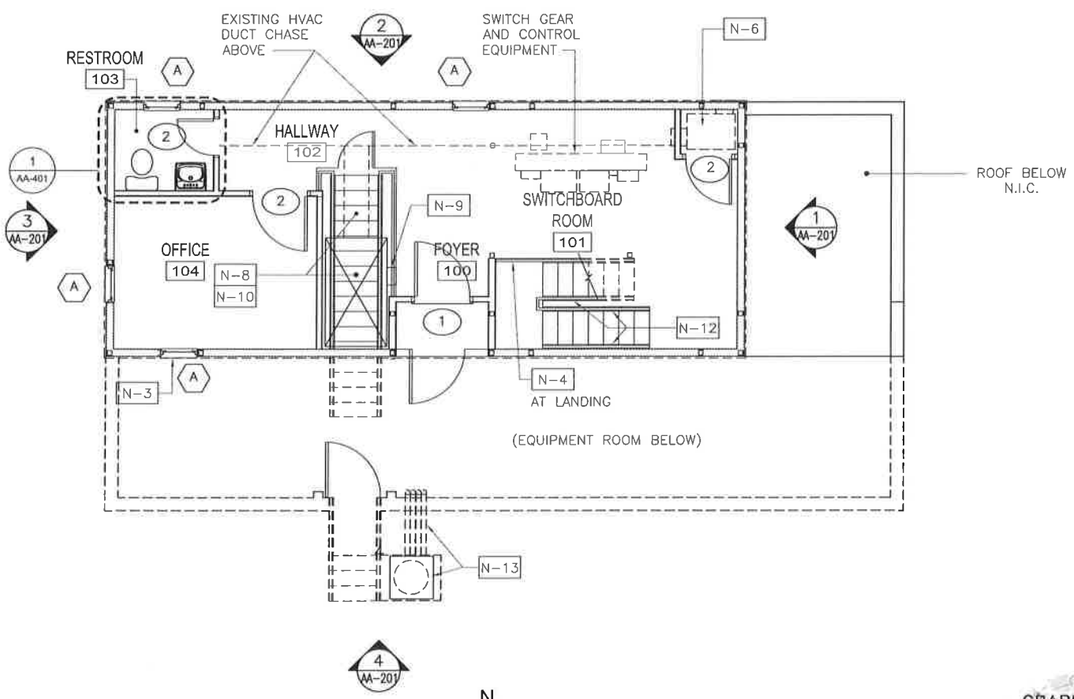

1 AA-101 FIRST FLOOR PLAN

1/4" = 1'-0"

SPECIFIC NOTES

N-1 REMOVE EXISTING INTERIOR WOOD PANELS AND INSULATION, INSTALL NEW BATT INSULATION 1/2" G.W.B. AND PAINT ENTIRE ROOM

N-2 OPERABLE WINDOW LOCATION.

N-3 REMOVE EXISTING SECURITY GRATING AND REINSTALL OVER WINDOW OPENING AFTER INSTALLATION OF NEW WINDOW. CLEAN GRATING PRIOR TO RE-INSTALATION

N-4 REMOVE EXISTING STEEL RAILING AND INSTALL NEW STEEL GUARDRAIL WITH TOP AT 42" AFF. COMPLY WITH FBC 2010 REQUIREMENTS, SECTION 1013 – GUARDS. PROVIDE DETAILED SHOP DRAWINGS, BASED ON FIELD DIMENSIONS FOR APPROVAL.

N-5 REMOVE EXISTING HVAC CONDENSER & SUPPORTING CURBS AT ROOF, INCLUDING ALL RELATED REFRIGERANT & CONDENSATE LINES, POWER CONDUIT & CONDUCTORS BACK TO SOURCE.

N-6 REMOVE EXISTING HVAC FAN UNIT & OUTSIDE AIR/EXHAUST GRILL. PATCH OPENING ON BLDG EXTERIOR TO MATCH EXISTING EXTERIOR WALL CONSTRUCTION.

N-7 INSTALL NEW 3-TON (MIN.) CONDENSER UNIT FOR NEW SPLIT SYSTEM HVAC SYSTEM. AT LOCATION UNDER BRIDGE OUTSIDE EQUIPMENT ROOM LEVEL. RUN REFRIGERANT LINES & POWER CONNECTIONS THROUGH EXISTING OPENING IN EQUIPMENT ROOM WALL & TO NEW FAN COIL UNIT LOCATION. CONTRACTOR SHALL PERFORM LOAD CALCULATION TO VERIFY UNIT CAPACITY AND SIZE.

N-8 INSTALL NEW FAN COIL UNIT AT PLATFORM ABOVE EXISTING STAIR. CONNECT TO EXISTING DUCT CONFIGURATION. RUN CONDENSATE DRAIN TO EXTERIOR WALL

N-9 PROVIDE RETURN AIR INLET GRILL FOR AHU THROUGH STAIR AT TOP OF WALL.

N-10 SUPPORT NEW AHU WITH NEW PLATFORM CONSTRUCTED FROM FRT 2X8's at 16" O.C. W/ 3/4" FRT PLYWOOD TIED INTO EXISTING STUD WALL CONSTRUCTION AT EACH SIDE OF STAIR.

N-11 INCLUDE COST TO INSTALL 24 SQUARE FEET OF TILE FLOORING TO MATCH EXISTING FLOORING AT LOCATION OF CONTROL PANEL REMOVAL.

N-12 REMOVE EXISTING STEEL RAILING AT STAIR AND INSTALL NEW GUARDRAIL (TP AT 42" H ABOVE STAIR NOSING) AND INTEGRAL HANDRAIL (TOP AT 36"H ABOVE STAIR NOSINGS). COMPLY WITH FBC 2010 SECTION 1012 – HANDRAILS. PROVIDE DETAILED SHOP DRAWINGS, BASED ON FIELD DIMENSIONS FOR APPROVAL.

GENERAL NOTES

A. CONTRACTOR SHALL FIELD VERIFY SIZES AND DIMENSIONS OF OPENINGS TO RECEIVE NEW WINDOWS, DOORS AND LOUVERS OR INTAKES. ITEMS TO BE REPLACED SHALL MATCH SIZE OF EXISTING OPENINGS.

B. REMOVE AND REPLACE ALL EXISTING EXTERIOR WINDOWS, DOOR AND FRAMES. REFER TO AA-201 FOR WINDOW, DOOR AND FRAME INFORMATION

C. FOR ELECTRICAL WORK INCLUDING INTERIOR AND EXTERIOR POWER AND DATA/PHONE OUTLETS AND ALL INTERIOR AND EXTERIOR LIGHT FIXTURES, AND LIGHT SWITCHES. REFER TO SHEET AA-601

D. PAINT ALL INTERIOR SURFACES (GYPSUM BOARD WALLS AND CEILINGS, METAL STAIRS AND RAILINGS, DOORS AND FRAMES). PATCH AND REPAIR ALL EXISTING DRYWALL AND PREPARE ALL SURFACES TO RECEIVE PAINT AS REQUIRED FOR PROPER APPLICATION OF COATINGS.

E. PATCH AND REPAIR EXISTING CEMENT PLASTER (STUCCO) OVER ENTIRE EXTERIOR OF BUILDING AND PAINT.

F. EXISTING FLOORING SHALL REMAIN. CLEAN TILE AND GROUT AND INSTALL NEW 4" RESILIENT WALL BASE THROUGHOUT.

G. PROTECT EXISTING GEAR OR EQUIPMENT FROM DAMAGE FOR DURATION OF PROJECT.

H. REPLACE ALL TOILET FIXTURES AND ACCESSORIES. REFER TO SHEET AA-401 FOR INFORMATION

ABBREVIATIONS

ABBREVIATION NOTES:

1. WORDS MAY OCCUR AS ABBREVIATIONS OR SPELLED OUT IN FULL.
2. THE CONTRACTOR SHALL BE FAMILIAR WITH THE ABBREVIATIONS AS LISTED BELOW.
3. ABBREVIATIONS FOLLOWED BY AN "S" INDICATE THE WORD HAS BEEN MADE PLURAL.
4. SEE ROOM SCHEDULES (THIS SHEET) FOR ROOM NAME ABBREVIATIONS

AHU	AIR HANDLING UNIT	NEC	NATIONAL ELECTRICAL CODE
A/C	AIR CONDITIONING	NOA	NOTICE OF ACCEPTANCE
BLDG	BUILDING	N.I.C.	NOT IN CONTRACT
DIM	DIMENSION	O.C.	OFF CENTER
EXT	EXTERIOR	TYP	TYPICAL
ELEV	ELEVATIONS	TLT	TOILET
FRT	FIRE RETARDANT TREATED	U.N.O	UNLESS NOTED OTHERWISE
FBC	FLORIDA BUILDING CODE	VIF	VERIFY IN FIELD
GFI	GROUND FAULT INTERRUPTOR	W/	WITH
GWB	GYPSUM WALL BOARD	&	AND
MIN	MINIMUN		
MFR	MANUFACTURER		

SYMBOL LEGEND

ROOM # — ROOM NAME / ROOM NUMBER

DOOR DESIGNATOR

B — WINDOW TYPE

N — NORTH

1 AA-XXX — ELEVATION MARK

1 AA-XXX — DETAIL MARK ENLARGED PLANS

N-# — SPECIFIC NOTES

1 AA-XXX TITLE 1/4" = 1'-0" — PLAN/ELEV/DETAIL SCALE

GRAPHIC SCALE
SCALE: 1/4" = 1'-0"
0 4 8'

REVISIONS					
Date	By	Description	Date	By	Description

	Names	Dates
Drawn by		
Checked by		
Designed by		
Checked by		
Approved by		

ENGINEER OF RECORD: A. HERNANDEZ, P.E. NO. 0893
7630 West Courtney Campbell Causeway
Tampa, Florida 33607
Certificate of Authorization No. 0002

TRANSPORTATION DIVISION
DEPARTMENT OF PUBLIC WORKS
CITY OF TAMPA, FLORIDA

SHEET TITLE: FIRST AND SECOND FLOOR PLANS

PROJECT NAME: LAUREL STREET BRIDGE NO. 105503 OVER THE HILLSBOROUGH RIVER

AA-101

SHEET NO. 2

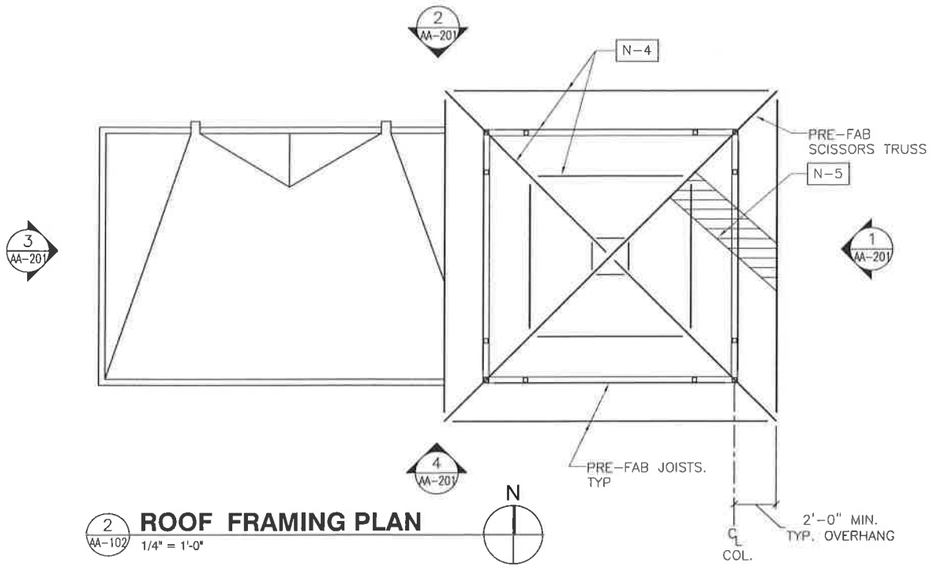

2 AA-102 **ROOF FRAMING PLAN**
1/4" = 1'-0"

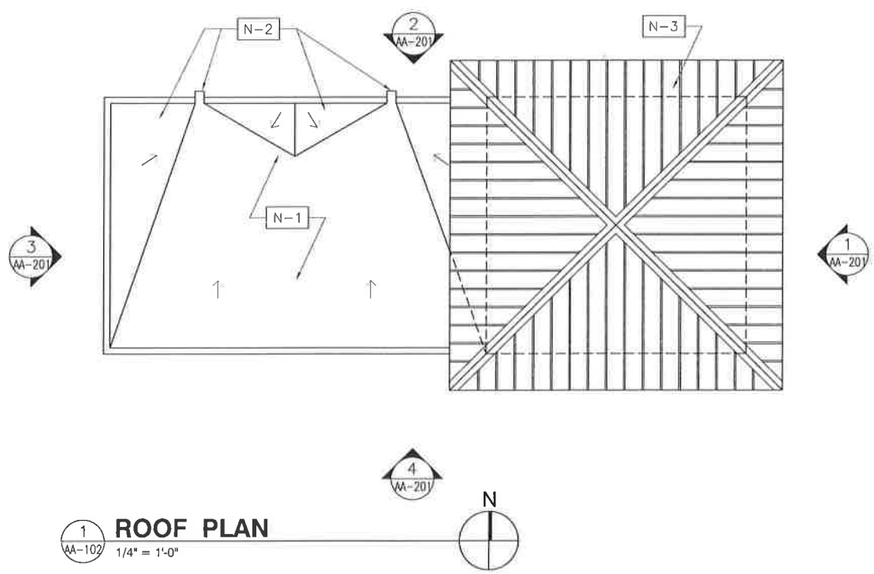

1 AA-102 **ROOF PLAN**
1/4" = 1'-0"

GRAPHIC SCALE
SCALE: 1/4" = 1'-0"
0 4' 8'

SPECIFIC NOTES

N-1 COMPLETELY REMOVE EXISTING ROOFING AND FLASHING TO EXPOSE CONCRETE ROOF DECK. PREPARE ROOF DECK FOR ROOF SYSTEM INSTALLATION ACCORDING TO ROOFING SYSTEM MANUFACTURER REQUIREMENTS. INSTALL COMPLETE SINGLE-PLY MEMBRANE ROOFING SYSTEM USING MANUFACTURER'S STANDARD INSTALLATION DETAILS.

N-2 INSTALL CRICKETS & SCUPPERS TO DRAIN ROOF.

N-3 INSTALL STANDING SEAM METAL ROOFING SYSTEM ON NEW DECKING OVER PRE-ENGINEERED ROOF TRUSS SYSTEM.

N-4 NEW PRE-ENGINEERED LIGHT-GAUGE ROOF TRUSS SYSTEM ANCHORED TO EXISTING STEEL COLUMNS.

N-5 NEW ROOF DECKING.PER NOA ROOFING ASSEMBLY

GENERAL NOTES

A. NEWLY INSTALLED ROOF SYSTEM COMPONENTS AND SYSTEM PRODUCTS SHALL BE TESTED, CERTIFIED & LABELED IN ACCORDANCE WITH MIAMI-DADE, NOTICE OF ACCEPTANCE (NOA) PROTOCOLS, FLORIDA STATUTES 553.842 AND THE FLORIDA BUILDING CODE 2010, HIGH VELOCITY HURRICANE ZONE STRUCTURAL AND BUILDING CONSTRUCTION REQUIREMENTS.

B. BASIS-OF-DESIGN SINGLE-PLY MEMBRANE ROOFING SYSTEM: FULLY-ADHERED KEE FLEECEBACK MEMBRANE SYSTEM W/ENGINEERED MECHANICAL FASTENING AT EDGES & CORNERS (AS MANUFACTURED BY SEAMAN CORPORATION, NOA #11-0517.11 OR EQUAL). CONTRACTOR SHALL PROVIDE A MIAMI-DADE NOTICE OF ACCEPTANCE (NOA) FOR ALL NEWLY INSTALLED ROOF COMPONENTS TO BUILDING DEPARTMENT FOR THE BUILDING PERMIT.

C. BASIS-OF-DESIGN STANDING SEAM METAL ROOFING SYSTEM: PRE-FINISHED 24GA MIN., GALVANIZED STEEL STANDING SEAM ZEE LOCK ROOFING SYSTEM WITH CONTINUOUS CLIPS (AS MANUFACTURED BY BERRIDGE MANUFACTURING COMPANY, NOA # 12-1113,03 OR EQUAL). CONTRACTOR SHALL PROVIDE A MIAMI-DADE NOTICE OF ACCEPTANCE (NOA)FOR ALL NEWLY INSTALLED ROOF COMPONENTS TO BUILDING DEPARTMENT FOR THE BUILDING PERMIT.

REVISIONS					
Date	By	Description	Date	By	Description

	Names	Dates
Drawn by		
Checked by		
Designed by		
Checked by		
Approved by		

ENGINEER OF RECORD
C. HERNANDEZ AR 8895
7650 West Courtney Cambell Causeway
Tampa, Florida 33607
Firm Authorization No. 0002
4/14/17

TRANSPORTATION DIVISION
DEPARTMENT OF PUBLIC WORKS
CITY OF TAMPA, FLORIDA

SHEET TITLE: **ROOF PLAN AND ROOF FRAMING PLAN** — **AA-102**

PROJECT NAME: *LAUREL STREET BRIDGE NO. 105503 OVER THE HILLSBOROUGH RIVER*

SHEET NO. **3**

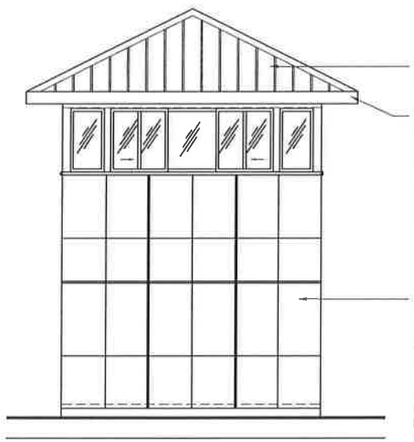

1 AA-201 **ELEVATION**
1/4" = 1'-0"

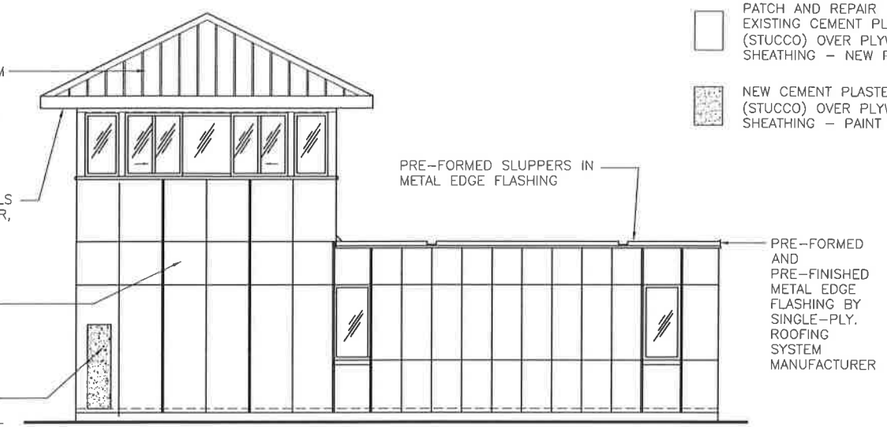

2 AA-201 **ELEVATION**
1/4" = 1'-0"

LEGEND

- OPERABLE HORIZONTAL SLIDING WINDOW SASH
- PATCH AND REPAIR EXISTING CEMENT PLASTER (STUCCO) OVER PLYWOOD SHEATHING – NEW PAINT
- NEW CEMENT PLASTER (STUCCO) OVER PLYWOOD SHEATHING – PAINT

GENERAL NOTES

A. REFER TO GENERAL NOTES ON SHEET AA-101

B. NEWLY INSTALLED DOOR, FRAMES AND WINDOW COMPONENTS SHALL BE TESTED, CERTIFIED AND LABELED IN ACCORDANCE WITH THE MIAMI-DADE, NOTICE OF ACCEPTANCE PROTOCOLS, FLORIDA STATUES 553.842 AND THE FLORIDA BUILDING CODE 2010, HIGH VELOCITY HURRICANE ZONE STRUCTURAL ADN BUILDING CONSTRUCTION REQUIREMENTS. CONTRACTOR TO PROVIDE A MIAMI-DADE NOA OR FLORIDA PRODUCT APPROVAL FOR ALL PROPOSED PRODUCTS TO BUILDING DEPARTMENT FOR THE BUILDING PERMIT.

C. NEW WINDOWS SHALL BE FIXED PANE U.O.N. AND MEET THE FOLLOWING GUIDELINES: ALUMINUM FRAME, BRONZE ANODIZED (TO MATCH EXISTING) THERMAL SASH, STORM/IMPACT RESISTANT.

D. BASIS-OF-DESIGN WINDOWS:

FIXED: PW 820 CONFIGURATION AS MANUFACTURED BY PGT INDUSTRIES (NOA # 13-0502.03/FL243 OR EQUAL).

FIXED-OPTION: SERIES "SS 3500" ALUMINUM STOREFRONT SYSTEM AS MANUFACTURED BY PGT INDUSTRIES (NOA # 12-1005.01/FL16175 OR EQUAL) – USE FOR FIXED PORTIONS OF CONTROL ROOM WINDOWS.

OPERABLE: SERIES "HR-810" ALUMINUM HORIZONTAL SLIDING WINDOWS AS MANUFACTURED BY PGT INDUSTRIES (NOA # 12-0718.05/FL242 OR EQUAL) – USE WHERE NOTED.

E. NEW EXTERIOR DOORS AND FRAMES SHALL MEET THE FOLLOWING GENERAL GUIDELINES: DOORS- FLUSH, OUT-SWING, SUPER HEAVY DUTY, 16 GA GALVANIZED STEEL POLYURETHANE FOAM CORE, FACTORY PRIMED FOR THE FIELD PAINT, FRAMES – 14 GA SUPER HEAVY DUTY GALVANIZED STEEL WITH MITERED AND WELDED CORNERS, FACTORY PRIME FOR FIELD PAINTING.

BASIS-OF-DESIGN EXTERIOR DOOR:
FLUSH OUTSWING COMMERCIAL STEEL DOORS AND FRAMES AS MANUFACTURED BY INGERSOLL RAND/STEELCRAFT (NOA # 12-3505.14 OR EQUAL) INCLUDE MORTISE LOCKSET CONFIGURATION (WITH EXIT DEVICE), WEATHER TIGHT THRESHOLD, DOOR SWEEP DRIP CAP AND WEATHER STRIPPING.

F. REMOVE AND REPLACE INTERIOR DOORS AND FRAMES TO MATCH EXISTING.

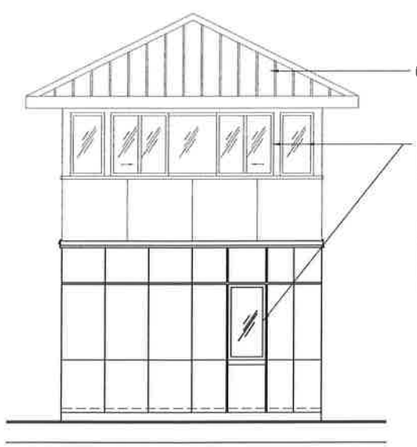

3 AA-201 **ELEVATION**
1/4" = 1'-0"

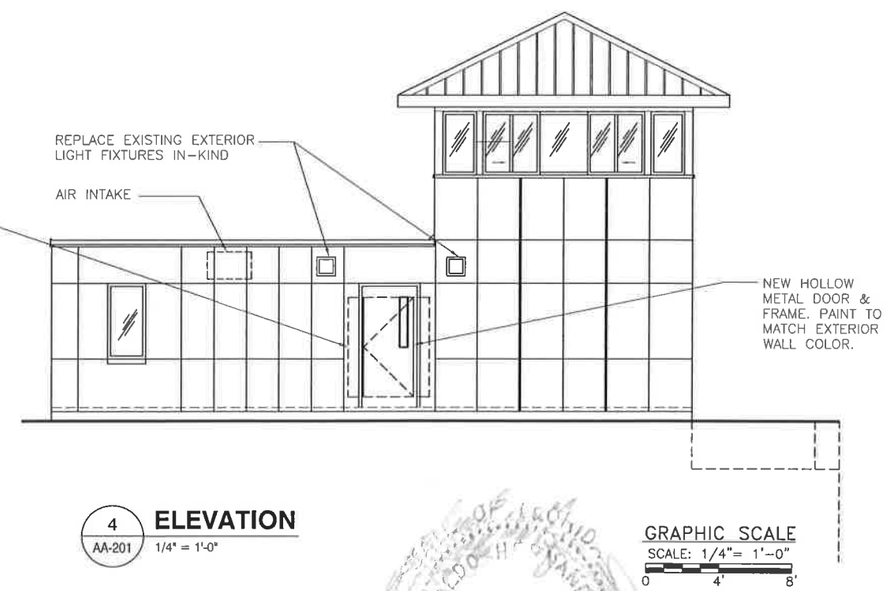

4 AA-201 **ELEVATION**
1/4" = 1'-0"

GRAPHIC SCALE
SCALE: 1/4"= 1'-0"
0 4' 8'

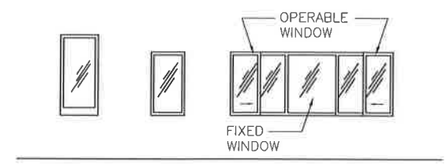

WINDOW DESIGNATOR: A B C

5 AA-201 **WINDOW TYPES**
1/4" = 1'-0"

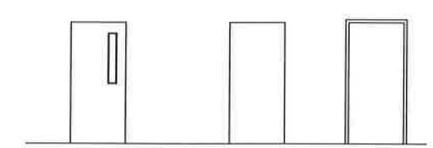

DOOR DESIGNATOR: 1 EXTERIOR DOOR 2 INTERIOR DOOR FRAME, TYP.

6 AA-201 **DOOR AND FRAME TYPES**
1/4" = 1'-0"

REVISIONS					
Date	By	Description	Date	By	Description

	Names	Dates
Drawn by		
Checked by		
Designed by		
Checked by		
Approved by		

ENGINEER OF RECORD:
A. HERNANDEZ AR 0893
7650 West Courtney Campbell Causeway
Tampa, Florida 33607
Cert. of Authorization No. 0002

TRANSPORTATION DIVISION
DEPARTMENT OF PUBLIC WORKS
CITY OF TAMPA, FLORIDA

SHEET TITLE: **EXTERIOR ELEVATIONS WINDOW, DOOR AND FRAME TYPES**

PROJECT NAME: *LAUREL STREET BRIDGE NO. 105503 OVER THE HILLSBOROUGH RIVER*

AA-201

SHEET NO. 4

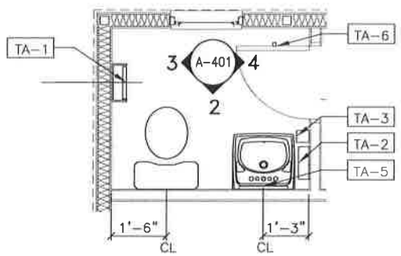

1 AA-401 **ENLARGED TOILET PLAN**
1/2" = 1'-0"

N

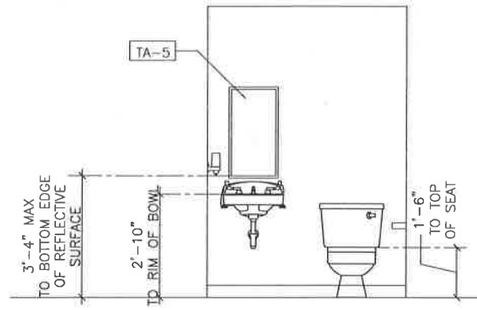

2 AA-401 **TOILET ELEVATION**
1/2" = 1'-0"

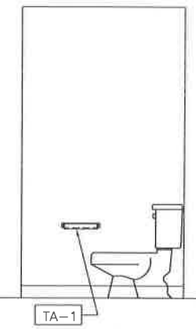

3 AA-401 **TOILET ELEVATION**
1/2" = 1'-0"

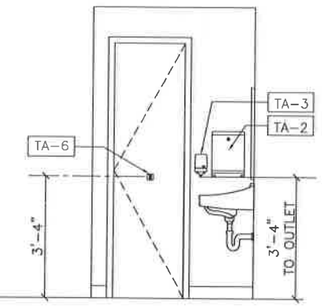

4 AA-401 **TOILET ELEVATION**
1/2" = 1'-0"

GRAPHIC SCALE
SCALE: 1/2"= 1'-0"
0 2' 4'

TOILET ACCESSORY SCHEDULE

MARK	DESCRIPTION	MOUNTING	MANUFACTURER	MODEL	NOTES
TA-1	TOILET PAPER DISPENSER	SURFACE	BOBRICK	B-253	
TA-2	PAPER TOWEL DISPENSER	SURFACE	BOBRICK	B-262	
TA-3	SOAP DISPENSER	SURFACE	BOBRICK	B-156	
TA-4	NOT USED				
TA-5	MIRROW WITH SS FRAME	SURFACE	BOBRICK	B-290-1830	WELDED ANGLE FRAME, TEMPERED GLASS
TA-6	COAT HOOK	SURFACE	BOBRICK	B-6707	CENTER ON DOOR

GENERAL NOTES

1. REPLACE EXISTING LAVATORY, FAUCET & WATER CLOSET. CONNECT TO EXISTING PLUMBING.

2. REMOVE & REPLACE EXISTING TOILET FIXTURES AND ROOM ACCESSORIES, PAPER TOWEL DISPENSER, TOILET TISSUE DISPENSER, SOAP DISPENSER OR SIMILAR WALL-MOUNT ACCESSORIES.

3. REFER TO TOILET FIXTURE SCHEDULE AND TOILET ACCESORY FOR REPLACEMENT

4. DIMENSIONS ARE FROM FACE TO FACE OF WALL SURFACES AND TO FINISH FLOOR UNLESS NOTED OTHERWISE

5. AT LAVATORY PROVIDE SHIELD OR WRAP DRAIN HOT WATER SUPPLY AND SHARP EDGES WITH INSULATION AND PROTECTIVE OVERWRAP.

PLUMBING FIXTURE SCHEDULE

MARK	DESCRIPTION	MANUFACTURER	MODEL NAME / NO.	SPECIFICATION	ACCESSORIES	REMARKS	MIN. PLUMBING CONNECTIONS		
							DRAINAGE	VENT	CW
WC-H	WATER CLOSET (ADA)	AMERICAN STANDARD	CADET 2467.016	WHITE VITREOUS CHINA, EVERCLEAN SURFACE, LOW-CONSUMPTION, 1.6 GPF, PRESSURE ASSISTED SIPHON JET FLUSH ACTION. FLOOR MOUNTED, ELONGATED BOWL, 16 1/2" RIM HEIGHT, FULLY GLAZED 2 1/8" TRAPWAY, 100% FACTORY FLUSH TESTED.	1.) CHURCH MODEL 9500 CC ELONGATED SEAT OPEN FRONT LESS COVER. 2.) RIGHT HAND TRIP LEVER FOR ADA COMPLIANCE. 3.) BRAIDED SUPPLY WITH 1/4 TURN CHROME STOP.	1.) MOUNT TO COMPLY WITH ADA REGULATIONS.	4"	3"	1/2"
LAV-H	LAVATORY (ADA) WALL HUNG	AMERICAN STANDARD	LUCERN 0356.421	WHITE VITREOUS CHINA, WALL MOUNTED TYPE, ADA LAVATORY. D-SHAPED BOWL, SELF DRAINING DECK, 20"x18" OVERALL SIZE WITH SINGLE FAUCET HOLE.	1.) FITTINGS: LAVATORY FAUCET WITH INTEGRAL AERATOR AND 0.5 GPM FLOW RESTRICTOR. AMERICAN STANDARD CERAMIX 2000.100. FINISH: CHROME 2.) PROVIDE LAVATORY SUPPLY ASSEMBLY, LOOSE KEY CONTROL VALVES, ESCUTCHEONS, AND TUBE RISERS. GRID DRAIN TAILPIECE WITH ADJUSTABLE CAST BRASS P-TRAP WITH TUBING DRAIN TO WALL, 1-1/4" INLET 1-1/2" OUTLET, SWIVEL JOINT, CLEANOUT PLUG, SLIP INLET, ESCUTCHEON, AND SET SCREW. FINISH: CHROME. 3.) FLOOR MOUNTED CONCEALED ARM CARRIER BY WADE, JOSAM OR MIFAB. 4.) ADA LAV GUARD INSULATION KIT BY TRUEBRO INC.	1.) MOUNT TO COMPLY WITH ADA REGULATIONS.	1 1/2"	2"	1/2"

REVISIONS					
Date	By	Description	Date	By	Description

	Names	Dates
Drawn by		
Checked by		
Designed by		
Checked by		
Approved by		

ENGINEER OF RECORD
A. HERNANDEZ AR 9869
7650 West Courtney Campbell Causeway
Tampa, Florida 33607
Cert. of Authorization No. 0002

TRANSPORTATION DIVISION
DEPARTMENT OF PUBLIC WORKS
CITY OF TAMPA, FLORIDA

SHEET TITLE:
ENLARGED TLT PLAN , TLT ELEVATIONS, PLUMBING FIXTURE AND TLT ACCESSORIES SCHEDULE

PROJECT NAME: *LAUREL STREET BRIDGE NO. 105503 OVER THE HILLSBOROUGH RIVER*

AA-401

SHEET NO. **5**

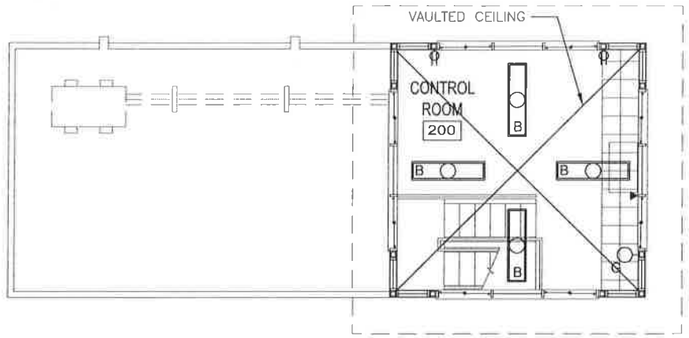

2 AA-101 SECOND FLOOR POWER AND LIGHTING PLAN

1/4" = 1'-0"

N

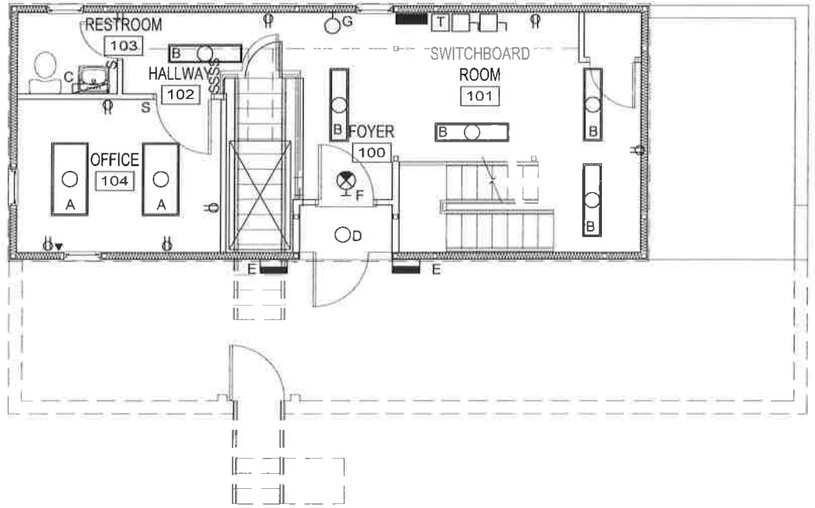

1 AA-101 FIRST FLOOR POWER AND LIGHTING PLAN

1/4" = 1'-0"

N

GENERAL NOTES

A. REMOVE AND REPLACE ALL INTERIOR AND EXTERIOR POWER AND DATA/PHONE OUTLETS, LIGHT FIXTURES, AND LIGHT SWITCHES U.N.O. CONNECT TO EXISTING CIRCUITS AND CONDUCTORS.

B. CONTRACTOR SHALL FIELD VERIFY LOCATION AND QUANTITY OF POWER AND DATA/PHONE OUTLETS, LIGHT FIXTURES, AND LIGHT SWITCHES TO BE REPLACED.

C. REPLACE EXISTING POWER OUTLETS ON BUILDING EXTERIOR WITH WEATHER-RESISTANT TYPE POWER OUTLETS.

D. INSTALL GROUND FAULT INTERRUPTION (G.F.I.) TAMPER RESISTANT TYPE POWER OUTLET(S) AT RESTROOM

E. FURNISH LABOR, MATERIAL, AND EQUIPMENT NECESSARY TO INSTALL, COMPLETE AND OPERABLE, THE ITEM OR SYSTEM INDICATED.
MATERIALS SHALL BE NEW, UL LISTED AND LABELED WHERE A STANDARD HAS BEEN ESTABLISHED FOR THE MATERIAL, AND SHALL CONFORM TO THE SPECIFICATIONS.
INSTALLATION SHALL CONFORM TO THE NATIONAL ELECTRICAL CODE, FLORIDA BUILDING CODE 2010, AND ALL OTHER APPLICABLE LOCAL CODES AND ORDINANCES ENFORCED BY THE AUTHORITY HAVING JURISDICTION.

F. COORDINATE WITH STRUCTURAL FRAME AND EXISTING CONDITIONS TO AVOID CONFLICTS THAT WILL NOT ALLOW THE INSTALLATION OF MATERIALS, AS INDICATED. INSPECT THE PROJECT SITE PRIOR TO BID TO DETERMINE THE EFFECT OF EXISTING CONDITIONS UPON ELECTRICAL WORK.

BASIS OF DESIGN – LIGHTING FIXTURES

SYMBOL	FIXTURE TYPE	LAMP TYPE/QTY
A	LITHONIA LIGHTING/ 2M-2-32-A12-GEB SERIES 2'X4' FIXTURE	F32T8 / 2 3500°K
B	LITHONIA LIGHTING/ M-2-32-A12-GEB SERIES 1'X4' FIXTURE	F32T8 / 2 3500°K
C	LITHONIA LIGHTING/ WC-2-32-A12-GEB SERIES 2'-0" LENGTH	F32T8 / 2 3500°K
D	DAY-BRITE LIGHTING – EXTERIOR DECK LIGHT CLR-32C-32WWCFL-C-BZ INTEGRAL EMERGENCY BALLAST TAMPER PROOF SCREWS	32W COMPACT FLUORESCENT
E	HUBBELL OUTDOOR LIGHTING/ WGC100 PS SERIES EXTERIOR WALL PACK TYPE FULL CUTOFF	100W PS / 1
F	DUALLITE LXUR SERIES. FACTORY ASSEMBLED WALL MOUNT LED ILLUMINATED EXIT SIGN	FURNISHED INTEGRAL TO UNIT
G	PHILIPS CHLORIDE CTX618 WHITE 9W TUNGSTEN WALL MOUNT EMERGENCY LIGHT PACK.	9W TUNGSTEN / 2

SYMBOL LEGEND

- DUPLEX RECEPTACLE
- TELEPHONE/DATA
- S GENERAL PURPOSE SWITCH

GRAPHIC SCALE
SCALE: 1/4"= 1'-0"
0 8'

REVISIONS					
Date	By	Description	Date	By	Description

	Names	Dates
Drawn by		
Checked by		
Designed by		
Checked by		
Approved by		

ENGINEER OF RECORD:
A. HERNANDEZ AR 8893
7630 West Courtney Campbell Causeway
Tampa, Florida 33607
Cert of Authorization No. 0002

TRANSPORTATION DIVISION
DEPARTMENT OF PUBLIC WORKS
CITY OF TAMPA, FLORIDA

SHEET TITLE:
FIRST AND SECOND POWER AND LIGHTING PLANS AND LIGHT FIXTURE SCHEDULE

PROJECT NAME: LAUREL STREET BRIDGE NO. 105503 OVER THE HILLSBOROUGH RIVER

AA-601

SHEET NO. 6

CITY OF TAMPA

LIGHTING REPLACEMENT

LAUREL STREET BRIDGE LIGHTING REPLACEMENT
BRIDGE NO. 105503

CITY PROJECT NO. 0000082 (TR0147)

AUGUST 2014

TRANSPORTATION DEPARTMENT

CITY OF TAMPA, FLORIDA

GOVERNING STANDARDS & SPECIFICATIONS:

FLORIDA DEPARTMENT OF TRANSPORTATION, 2014 DESIGN STANDARDS AND REVISED INDEX DRAWINGS AS APPENDED HEREIN, AND 2014 STANDARD SPECIFICATIONS FOR ROAD AND BRIDGE CONSTRUCTION, AS AMENDED BY CONTRACT DOCUMENTS.

FOR DESIGN STANDARDS CLICK ON THE "DESIGN STANDARDS" LINK AT THE FOLLOWING WEB SITE:
http://www.dot.state.fl.us/rddesign/design standards

FOR THE STANDARD SPECIFICATIONS FOR ROAD AND BRIDGE CONSTRUCTION CLICK ON THE "SPECIFICATIONS" LINK AT THE FOLLOWING WEB SITE:
http://www.dot.state.fl.us/specificationsoffice/standard specifications

ATTENTION IS DIRECTED TO THE FACT THAT THESE PLANS HAVE BEEN REDUCED IN SIZE BY REPRODUCTION. THIS MUST BE CONSIDERED WHEN OBTAINING SCALED DATA

SHEET NO.
L-1

VICINITY MAP

INDEX OF DRAWINGS

SHEET NO.	SHEET DESCRIPTION
L-1	KEY SHEET
L-2	SUMMARY OF PAY ITEMS
L-3	BRIDGE LIGHTING PLAN AND ELEVATION
L-4	TABULATION OF QUANTITIES
L-5	POLE DATA, LEGEND AND CRITERIA
L-6	LIGHTING GENERAL NOTES
L-7	LIGHTING DETAILS (1 OF 2)
L-8	LIGHTING DETAILS (2 OF 2)
S-1	STRUCTURAL SCOPE OF WORK AND GENERAL NOTES
S-2	STRUCTURAL LOCATION PLAN AND ELEVATION
S-3	CONCRETE PEDESTAL DETAILS
S-4	LIGHT PILASTER DETAILS
EB-1	EXISTING RAILING DETAILS

REVISIONS

DATE	BY	DESCRIPTION

APPROVED BY:

ALTAF BUKHARI, P.E.
PROJECT MANAGER
TRANSPORTATION DEPARTMENT

CERTIFICATION

Sheet L-1 to L-8 Inclusive, Certified by:

MICHAEL ROY SAKALES
P.E.

MICHAEL ROY SAKALES
LICENSE
No. 67588
8/15/14
STATE OF FLORIDA
PROFESSIONAL ENGINEER

Sheet L-1 to L-8 Inclusive, Certified by:

TIMOTHY J. FARRELL
P.E.

TIMOTHY J. FARRELL
LICENSE
No. 37264
STATE OF FLORIDA
PROFESSIONAL ENGINEER

8/15/14

PAY ITEM #	PAY ITEM DESCRIPTION	UNIT	QUANTITY
0101-1	MOBILIZATION	LS	1
0102-1	MAINTENANCE OF TRAFFIC	LS	1
630-2-11	LIGHTING CONDUIT, F&I, UNDERGROUND	LF	100
630-2-12	LIGHTING CONDUIT, F&I, DIRECTIONAL BORE	LF	160
630-2-15	LIGHTING CONDUIT, F&I, SURFACE MOUNT	LF	1100
635-2-11	PULL BOX & SPLICE BOX (IN GROUND)	EA	2
635-3-12	JUNCTION BOX (SURFACE MOUNT)	EA	22
715-1-11	CONDUCTOR INSULATED #10	LF	3600
715-1-11	CONDUCTOR GREEN INSULATED #10	LF	1255
715-1-12	CONDUCTOR INSULATED #8	LF	1100
715-5-12	LUMINAIRE & BRACKET ARM	EA	3
715-7-11	LIGHTING-LOAD CENTER, F&I, SECONDARY VOLTAGE	EA	1
715-516-135	LIGHTING POLE COMPLETE (F&I) BRIDGE MTG) (35'MH)	EA	4
715-516-310	LIGHTING POLE COMPLETE (F&I) (POLE TOP CONCRETE) (10'MH)	EA	15
715-550-000	LIGHT POLE COMPLETE (REMOVE)	EA	3

PVC Coated Metal Conduit

A. Furnish and install hot dipped galvanized rigid steel conduit (ANSI C80.1) with internal and external PVC coating 40 mils thick; meeting the requirements of NEMA RN 1 and Fittings and Conduit Bodies meeting the requirements of NEMA FB 1 with steel fittings with internal and external PVC coatings to match conduit

B. Provide 40 mils thick PVC coating on the outside of couplings and a series of raised longitudinal ribs to protect the coating from tool damage during installation.

C. Ensure the bond between the PVC coating and the conduit surface is greater that the tensile strength of the coating. Verify this bond by testing described in NEMA Standard RN-1, Section 3.8.

D. Uniformly and consistently apply a nominal 2-mil thick urethane coating to the interior of all conduit and fittings. Conduit or fittings having pinholes or areas with thin or no coating are unacceptable

E. Protect all factory cut threads on conduit, elbows, nipples, and fittings by application of a urethane coating. The PVC exterior and urethane interior coatings applied to the conduit must afford sufficient flexibility to permit field bending without cracking or flaking at temperatures above 30 degrees F.

F. Furnish right angle beam clamps and U bolts specially formed and sized to snugly fit the outside diameter of the PVC coated conduit. All U bolts will supplied with encapsulated nuts that cover the exposed portions of the threads.

G. Ensure that only tools designed and approved by the conduit manufacturer for use on PVC coated materials are used and the workmen performing the installation are trained and skilled in the installation and use of PVC conduit and fittings by the manufacturer.

H. All PVC coated conduit, fittings, and accessories must be supplied by the same manufacturer.

Enclosed Circuit Breaker

A. Provide enclosed circuit breaker with NEMA Type 4X stainless steel enclosures.

B. Enclosed circuit breaker shall be UL Listed and have interrupting rating of 18kA.

Photo Cell

A. Provide photocell switch hermetically sealed cadmium sulphide cell rated for the system voltage with single throw contacts rated 1,000 watts. .

B. The unit shall turn ON below 3 footcandles and OFF at 3 to 10 fc.

C. A time delay shall prevent accidental switching from transient light sources

D. A directional lens shall be mounted in front of the cell to prevent fixed light sources from creating a turn-off condition. The unit shall be aimed according to manufacturer's instructions.

15kVa Combination Transformer/CB Distribution Panel

A. Furnish and install combination single phase 15kVA 480/208-120V transformer and circuit breaker distribution panel.

B. Transformer/CB panel shall be a single unit, with a minimum of 24 circuits, UL listed, short circuit rating of 18kA and enclosure shall be NEMA 3R.

C. Transformer shall be copper wound, with 2 1/2 percent full capacity taps above and below rated voltages.

D. A directional lens shall be mounted in front of the cell to prevent fixed light sources from creating a turn-off condition. The unit shall be aimed according to manufacturer's instructions.

MICHAEL ROY SAKALES
LICENSE
No. 67588
8/15/14
STATE OF
FLORIDA
PROFESSIONAL ENGINEER

REVISIONS

DATE	BY	DESCRIPTION	DATE	BY	DESCRIPTION

	NAME	DATE
DRAWN BY	RFN	06-14
CHECKED BY	MAL	06-14
DESIGNED BY	RFN	06-14
CHECKED BY	MRS	08-14
APPROVED BY	M.R. SAKALES	

ENGINEER OF RECORD:
MICHAEL R. SAKALES, P.E.
P.E. License No: 67588
URS CORPORATION SOUTHERN
7650 West Courtney Campbell Causeway
Tampa, Florida 33607
Certificate of Authorization No 0002

TRANSPORTATION DIVISION
DEPARTMENT OF PUBLIC WORKS
CITY OF TAMPA, FLORIDA

SHEET TITLE: SUMMARY OF PAY ITEMS

PROJECT NAME: LAUREL STREET BRIDGE NO. 105503 OVER THE HILLSBOROUGH RIVER

SHEET NO. L-2

URS CORPORATION 8/15/2014 3:42:53 PM F:\96998535\Laurel Street\Lighting\L-2 SUMMARY OF PAY ITEMS.dwg

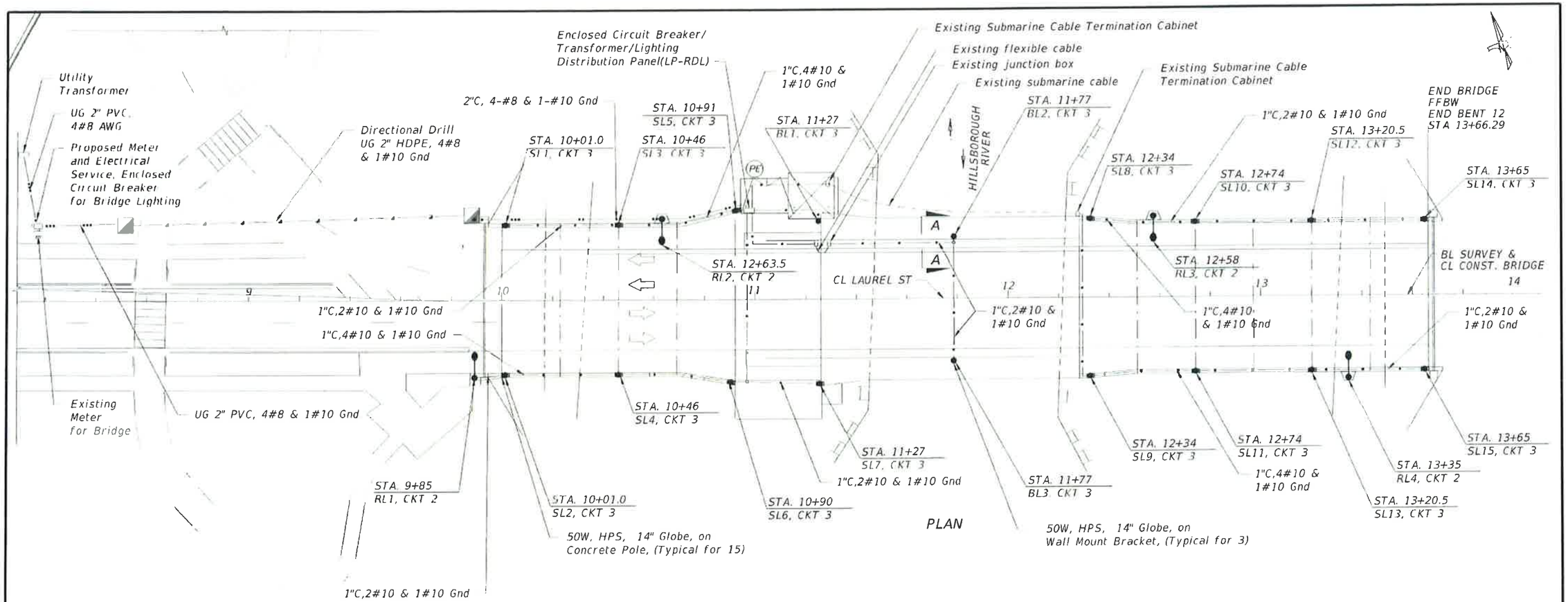

PLAN

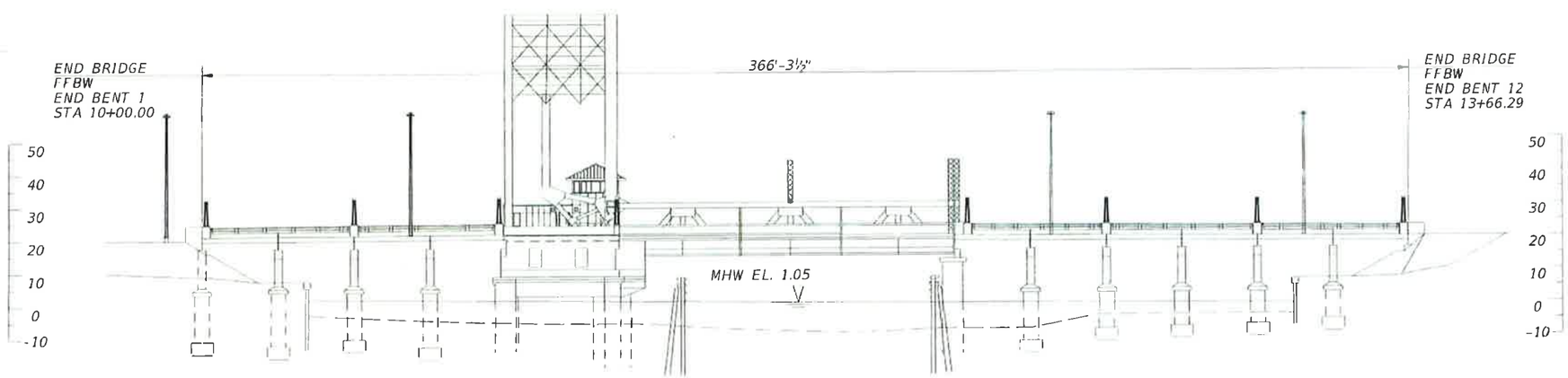

ELEVATION

MICHAEL ROY SAKALES
LICENSE
No. 67588
8/15/14
STATE OF FLORIDA
PROFESSIONAL ENGINEER

REVISIONS					
DATE	BY	DESCRIPTION	DATE	BY	DESCRIPTION

	NAME	DATE
DRAWN BY	RFN	06-14
CHECKED BY	MAL	06-14
DESIGNED BY	RFN	06-14
CHECKED BY	MRS	08-14
APPROVED BY	M.R. SAKALES	

ENGINEER OF RECORD:
MICHAEL R. SAKALES, P.E.
P.E. License No: 67588
URS CORPORATION SOUTHERN
7650 West Courtney Campbell Causeway
Tampa, Florida 33607
Certificate of Authorization No. 0002

TRANSPORTATION DIVISION
DEPARTMENT OF PUBLIC WORKS
CITY OF TAMPA, FLORIDA

SHEET TITLE: BRIDGE LIGHTING PLAN AND ELEVATION

PROJECT NAME: LAUREL STREET BRIDGE NO. 105503 OVER THE HILLSBOROUGH RIVER

SHEET NO. L-3

URS CORPORATION 8/15/2014 4:00:45 PM F:\25689432 Laurel Street Lighting\L-3 BRIDGE LIGHTING PLAN.dgn

TABULATION OF QUANTITIES

BID ITEM NO.	DESCRIPTION	UNIT	DRAWING NUMBER L-3 ORIG.	DRAWING NUMBER L-3 FINAL	TOTAL THIS SHEET ORIG.	TOTAL THIS SHEET FINAL	GRAND TOTAL ORIG.	GRAND TOTAL FINAL	REF. SHEET
0101-1	MOBILIZATION	LS	1		1				
0102-1	MAINTENANCE OF TRAFFIC	LS	1		1				
630-2-11	LIGHTING CONDUIT, F&I, UNDERGROUND	LF	100		100				
630-2-12	LIGHTING CONDUIT, F&I, DIRECTIONAL BORE	LF	160		160				
630-2-15	LIGHTING CONDUIT, F&I, SURFACE MOUNT	LF	1100		1100				
635-2-11	PULL BOX & SPLICE BOX (IN GROUND)	EA	2		2				
635-3-12	JUNCTION BOX (SURFACE MOUNT)	EA	22		22				
715-1-11	CONDUCTOR INSULATED #10	LF	3600		3600				
715-1-11	CONDUCTOR GREEN INSULATED #10	LF	1255		1255				
715-1-12	CONDUCTOR INSULATED #8	LF	1100		1100				
715-5-12	LUMINAIRE & BRACKET ARM	EA	3		3				
715-7-11	LIGHTING-LOAD CENTER, F&I, SECONDARY VOLTAGE	EA	1		1				
715-516-135	LIGHTING POLE COMPLETE (F&I) BRIDGE MTG) (35'MH)	EA	4		4				
715-516-310	LIGHTING POLE COMPLETE (F&I) (POLE TOP CONCRETE) (10'MH)	EA	15		15				
715-550-000	LIGHT POLE COMPLETE (REMOVE)	EA	3		3				

PAY ITEM NOTES

715-5-12 ROADWAY LIGHT (BRIDGE) - PAY ITEM INCLUDES COST OF LUMINAIRE, MOUNTING BRACKET, AND ANCHORAGE.

715-7-11 LOAD CENTER - PAY ITEM INCLUDES COST OF PHOTO ELECTRIC RELAY, SWITCH, CONTACTOR, ENCLOSURE, SERVICE METER, DISCONNECT SWITCHES, COMBINATION TRANSFORMER/CIRCUIT BREAKER DISTRIBUTION PANEL AND ALL MOUNTING HARDWARE.

715-516-135 ROADWAY LIGHT (BRIDGE) - PAY ITEM INCLUDES COST OF LUMINAIRE, POLE ASSEMBLIES, AND LIGHT POLE PILASTER.

715-516-310 ROADWAY LIGHT (BRIDGE) - PAY ITEM INCLUDES COST OF LUMINAIRE, POLE ASSEMBLIES, MODIFICATIONS TO EXISTING TRAFFIC RAILING, AND NEW CONCRETE PEDESTALS.

715-550-000 LIGHT POLE (REMOVE) - PAY ITEM INCLUDES COST OF REMOVING AND DISPOSING OF EXISTING LIGHT POLES, LUMINARIES AND ANCHORAGES. DRILL OUT ANCHOR BOLTS AND CONDUIT AND PATCH WITH AN EPOXY GROUT.

MICHAEL ROY SAKALES
LICENSE No. 67588
8/15/14
STATE OF FLORIDA
PROFESSIONAL ENGINEER

NOTICE: THE OFFICIAL RECORD OF THIS SHEET IS THE ELECTRONIC FILE SIGNED AND SEALED UNDER RULE 61G15-23.003, F.A.C

REVISIONS

DATE	BY	DESCRIPTION	DATE	BY	DESCRIPTION

	NAMES	DATES
DRAWN BY	RFN	06-14
CHECKED BY	MAL	06-14
DESIGNED BY	RFN	06-14
CHECKED BY	MRS	08-14
APPROVED BY	M.R. SAKALES	

ENGINEER OF RECORD:
MICHAEL R. SAKALES, P.E.
P.E. License No: 67588
URS CORPORATION SOUTHERN
7650 West Courtney Campbell Causeway
Tampa, Florida 33607
Certificate of Authorization No. 0002

TRANSPORTATION DIVISION
DEPARTMENT OF PUBLIC WORKS
CITY OF TAMPA, FLORIDA

SHEET TITLE: TABULATION OF QUANTITIES

PROJECT NAME: LAUREL STREET BRIDGE NO. 105503 OVER THE HILLSBOROUGH RIVER

SHEET NO. L-4

URS CORPORATION 8/15/2014 4:15:07 PM F:\PROJECT Laurel Street\Lighting\L-4 QUANTITIES.dgn

ROADWAY LIGHTING DESIGN CRITERIA

AASHTO Roadway Classification	Major Arterial
Average Intensity	1.5
Uniformity Ratio AVG /MIN.	4:1 Or Less
MAX./MIN Ratio	10:1 Or Less
Wind Speed	130 mph

POLE DATA

POLE NO.	CKT.	STATION	OFFSET	DIST. OR ARM	LUM. WATTAGE	M.H.	NOTES	FINAL
RL1	2	9+85	30.5' R	TOP	250	35'		
RL2	2	12+63.5	32' L	TOP	250	35'		
RL3	2	12+58	32.5' L	TOP	250	35'		
RL4	2	13+35	32.5' R	TOP	250	35'		
SL1	3	10+01	29.5' L	TOP	50	12'		
SL2	3	10+01	30' R	TOP	50	12'		
SL3	3	10+46	29.5' L	TOP	50	12'		
SL4	3	10+46	29.5' R	TOP	50	12'		
SL5	3	10+90	35.3' L	TOP	50	12'		
SL6	3	10+91	32.7' R	TOP	50	12'		
SL7	3	11+27	34.1' L	TOP	50	12'		
SL8	3	12+34	31.1' L	TOP	50	12'		
SL9	3	12+34	31.6' R	TOP	50	12'		
SL10	3	12+74	29.6' L	TOP	50	12'		
SL11	3	12+74	30.3' R	TOP	50	12'		
SL12	3	13+20.5	29.6' L	TOP	50	12'		
SL13	3	13+20.5	30.3' R	TOP	50	12'		
SL14	3	13+65	29.6' L	TOP	50	12'		
SL15	3	13+65	30.3' R	TOP	50	12'		
BL1	3	11+27	30.9' L	BRACKET	50	11'-10"	WALL BRACKET	
BL2	3	11+77	24.5'L	BRACKET	50	11'-10"	WALL BRACKET	
BL3	3	11+77	24.5' R	BRACKET	50	11'-10"	WALL BRACKET	

LEGEND

SYMBOL	DESCRIPTION
	150 Watt, High Pressure Sodium Luminaire, Flat Glass Full-Cutoff Narrow Type II Distribution, IES photometric No. 51850 Integral Magnetic Regulator Type Ballast, Wired for 120 Volt Operation, Mounting Height, 35 Feet on Aluminum Pole. Tilt 10 Degrees.
	50 Watt, High Pressure Sodium Pole MountedLuminaire, 14 Inch White Acrylic Globe with Integral Magnetic Regulator Type Ballast, Wired for 120 Volt Operation, Mounting Height, 12 Feet on Decorative Concrete Pole.
	50 Watt, High Pressure Sodium Braket Mounted Luminaire, 14 Inch White Acrylic Globe with Integral Magnetic Regulator Type Ballast, Wired for 120 Volt Operation, Mounting Height, 12 Feet on Decorative Concrete Pole.
	1" Hot Dipped Galvanized, PVC coated, Rigid Steel Conduit with XHHW-2 Conductors, No. 10 AWG, Qty as shown in the plans and 1 No. 10 AWG, Insulated Copper Grounding Conductor.
	2" Hot Dipped Galvanized, PVC coated, Rigid Steel Conduit with XHHW-2 Conductors, 4 No. 8 AWG and 1 No. 10 AWG, Insulated Copper Grounding Conductor.
	2" Schedule 40 PVC Conduit with 4 - No.8 AWG, RHW or THW Conductors and 1 No. 10 AWG Insulated Copper Ground Conductor, Unless Otherwise Noted on Plans.
	2" HDPE Conduit with directional bore under pavement with 4-No. 8 AWG, RHW or THW conductors and 1 No. 10 AWG insulated copper ground Conductor.
	Junction/Pull Box, Surface Mount, 8"x8"x6" NEMA 4X, 316 SS with Hinged Cover, Gasketed, Watertight.
	24"x18"x12" Polymer concrete In-Ground Pull Box with bolted cover, ANSI/STCE 77 Load compliant and tier 22 rated.

NOTES:

1. Refer to Bridge Lighting Plan and Elevation, Sheet No. L-3 for Locations of LP-RDL and Lighting Control Panel.
2. Locate Photocell (PE) on Control House, North Side, Under Roof Eave at an Accessable Location to be approved by the Engineer.

MICHAEL ROY SAKALES
LICENSE No. 67588
8/15/14
STATE OF FLORIDA
PROFESSIONAL ENGINEER

REVISIONS

DATE	BY	DESCRIPTION	DATE	BY	DESCRIPTION

	NAMES	DATES
DRAWN BY	RFN	06-14
CHECKED BY	MAL	06-14
DESIGNED BY	RFN	06-14
CHECKED BY	MRS	08-14
APPROVED BY	M.R. SAKALES	

ENGINEER OF RECORD:
MICHAEL R. SAKALES, P.E.
P.E. License No: 67588
URS CORPORATION SOUTHERN
7650 West Courtney Campbell Causeway
Tampa, Florida 33607
Certificate of Authorization No. 0002

TRANSPORTATION DIVISION
DEPARTMENT OF PUBLIC WORKS
CITY OF TAMPA, FLORIDA

SHEET TITLE: POLE DATA, LEGEND AND CRITERIA

PROJECT NAME: LAUREL STREET BRIDGE NO. 105503 OVER THE HILLSBOROUGH RIVER

SHEET NO. L-5

GENERAL NOTES

1. Prior to any equipment order, the Contractor shall submit for approval seven (7) copies of equipment specification and design data for all material proposed for the project. These must specifically include:

   A. Luminaire Photometrics
   B. Pole strength calculations
   C. Anchor bolt specifications and bolt circle diameter
   D. Pole and Luminaire shop drawings

2. Utility Owners:

   One Source New Construction
   Tampa Electric
   P.O. Box 173169
   Tampa,FL 33672
   813-635-1500

3. Poles, luminaires and bases shall be fabricated in accordance with AASHTO "Standard Specifications for Structural Support for Highway Signs, Luminaires and Traffic Signals", and shall have been tested by FHWA approved methods. Certification for tests shall be submitted with the shop drawings.

4. All electrical work shall meet all requirements of the latest editions of the National Electrical Code, the National Electrical Safety Code and the State of Florida DOT Standard Specifications for Road and Bridge Construction. All components shall be properly grounded and bonded per the NEC requirements

5. Furnish and install an aluminum identification tag on each roadway light pole. (Do Install on Concrete Poles). Tags shall be 2" x 12" in size with black letters on yellow background, attached with rivets (not screws). Numbers shall be as shown on the Pole Data Sheet. See Pole Identification Tag Detail. Cost of tags shall be included in the Pay Item for Light Pole Complete.

6. Pulling Instructions: Connect pulling devices to copper wire and not to jacket and meet manufacturer's requirements. Use pulling compound per manufacturer's requirements. All bends shall be less than recommended by the NEC or NESC for cable used.

7. All mounting hardware for electrical equipment (pull/junction boxes, disconnect switches, transformers) shall be grade 316 stainless steel. Use PVC coated steel support struts and clamps to support PVC coated conduits.

8. All roadway lighting poles mounted on the bridge shall have handholes located perpendicular to the luminaire at the bottom of the pole. Poles mounted on bridge structure shall be non-frangible.

9. All electrical equipment shall be new, of current model, from a single manufacturer, UL listed or labeled, suitable for the intended application and installed in accordance with NFPA 70 (NEC).

10. Ground lugs shall be located at each pull box. All boxes shall be bonded to the bridge grounding system with an insulated green #10 AWG RHW-2 ground conductor.

11. Splices and connections shall be made in light pole bases and pull boxes. The connection made at these points shall be combination splices and fuse holder and shall be protected with EDCO SHA1203 surge suppressors.

12. Furnish and install combination single phase 5kVA 480/240-120V transformer and circuit breaker distribution panel. Transformer/CB panel shall be a single unit, with a minimum of 10 circuits, UL listed, short circuit rating of 18kA and enclosure shall be NEMA 3R. Transformer shall be copper wound, with 2 ½ percent full capacity taps above and below rated voltages.

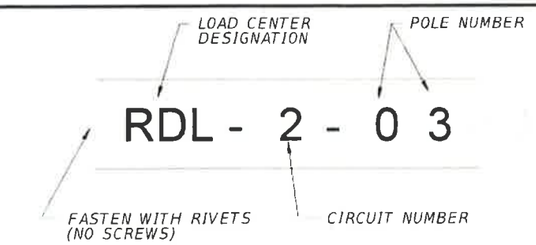

POLE IDENTIFICATION TAG DETAIL
See Note 5
(N.T.S.)

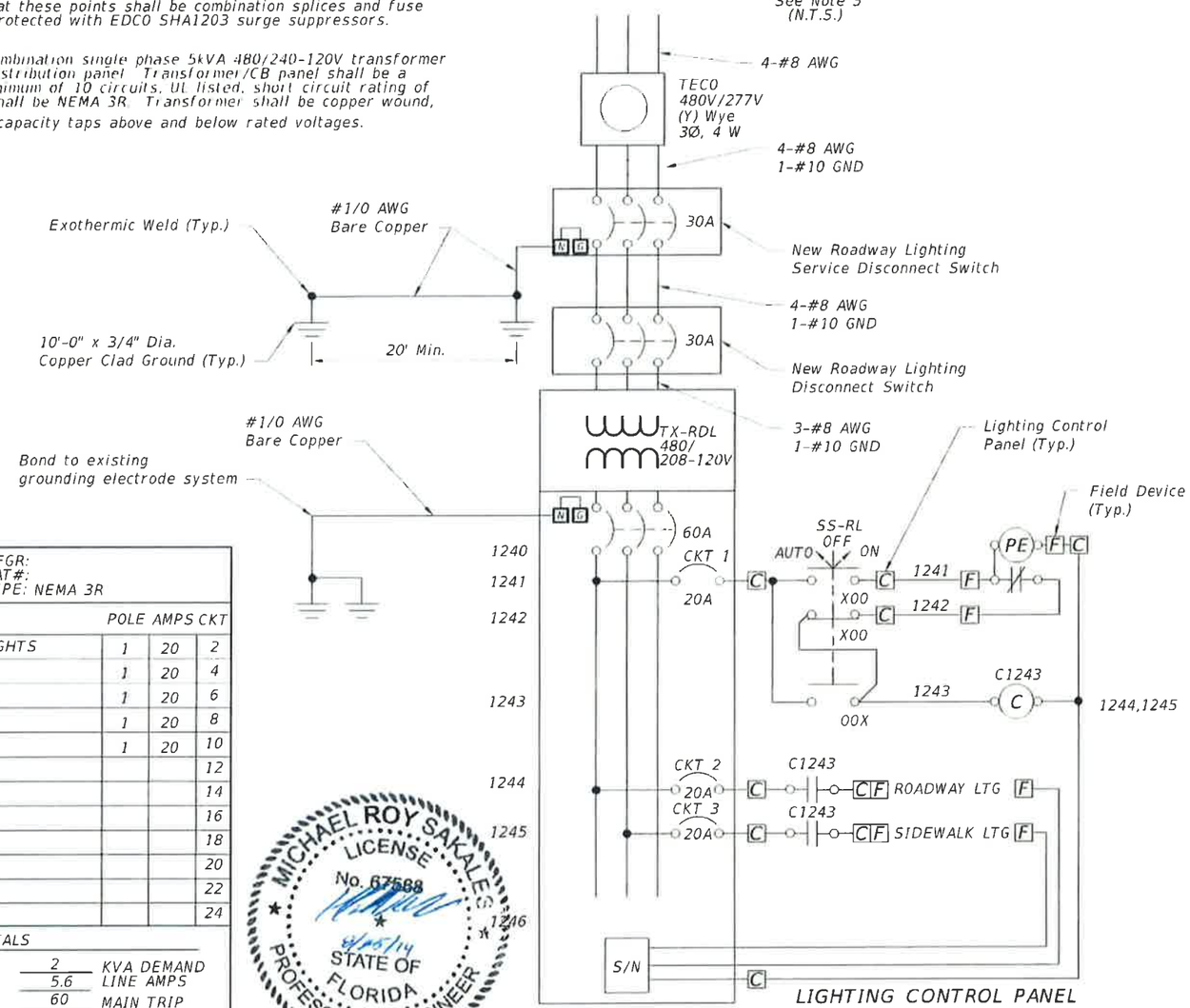

Combination Transformer/CB Distribution
Panel - 3P 15KVA 480-120/208V

VOLTAGE: 208V/120V, 3Ø, 4W
RATING: 60A MCB
FEEDER: 6 AWG

PANEL LP-RDL

MFGR:
CAT#:
TYPE: NEMA 3R

CKT	AMPS	POLE	DESCRIPTION	VOLTAMPERES		A	B	C	VOLTAMPERES		DESCRIPTION	POLE	AMPS	CKT
1	20	1	CONTROL POWER	100		X			1000		ROADWAY POLE LIGHTS	1	20	2
3	20	1	SIDEWALK LTS.		900		X				SPARE	1	20	4
5	20	1	SPARE					X			SPARE	1	20	6
7	20	1	SPARE			X					SPARE	1	20	8
9	20	1	SPARE				X				SPARE	1	20	10
11	20	1	SPARE					X			SPARE			12
13			SPACE								SPACE			14
15			SPACE								SPACE			16
17			SPACE								SPACE			18
19			SPACE								SPACE			20
21			SPACE								SPACE			22
24			SPACE								SPACE			24
TOTALS				100	900	S/N			1000		TOTALS			

BUS A 1100 VA
BUS B 900 VA
BUS C
LOAD 2000 VA

2 KVA DEMAND
5.6 LINE AMPS
60 MAIN TRIP
100 MAIN LUGS

PANEL SCHEDULE (LP-RDL)

MICHAEL ROY SAKALES
LICENSE
No. 67588
8/15/14
STATE OF FLORIDA
PROFESSIONAL ENGINEER

NOTICE: THE OFFICIAL RECORD OF THIS SHEET IS THE ELECTRONIC FILE SIGNED AND SEALED UNDER RULE 61G15-23.003, F.A.C

REVISIONS

DATE	BY	DESCRIPTION	DATE	BY	DESCRIPTION

	NAMES	DATES
DRAWN BY	RFN	06-14
CHECKED BY	MAL	06-14
DESIGNED BY	RFN	06-14
CHECKED BY	MRS	08-14
APPROVED BY	M.R. SAKALES	

ENGINEER OF RECORD:
MICHAEL R. SAKALES, P.E.
P.E. License No: 67588
URS CORPORATION SOUTHERN
7650 West Courtney Campbell Causeway
Tampa, Florida 33607
Certificate of Authorization No. 0002

TRANSPORTATION DIVISION
DEPARTMENT OF PUBLIC WORKS
CITY OF TAMPA, FLORIDA

SHEET TITLE: LIGHTING GENERAL NOTES

PROJECT NAME: LAUREL STREET BRIDGE NO. 105503
OVER THE HILLSBOROUGH RIVER

SHEET NO. L-6

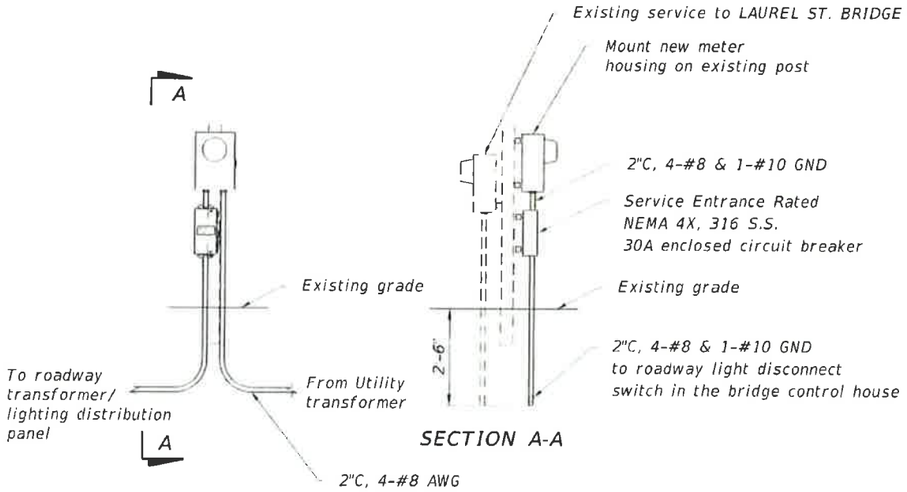

SECTION A-A

SERVICE ENTRANCE DETAIL

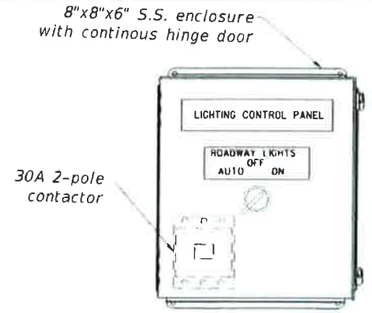

LIGHTING CONTROL PANEL LAYOUT
(NTS)

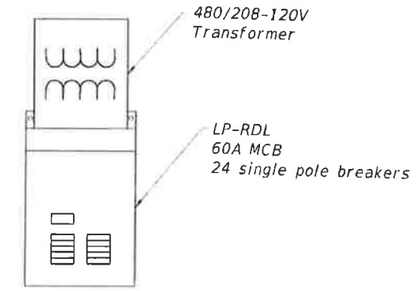

15kVA, 3Ø Combination 480/208-120V Transformer/ CB Distribution Panel
(NTS)

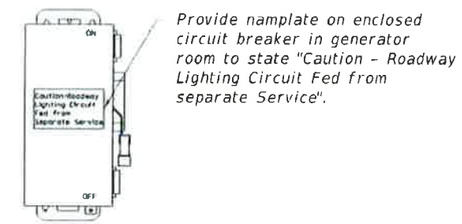

Roadway Lighting Enclosed Circuit Breaker
(NTS)

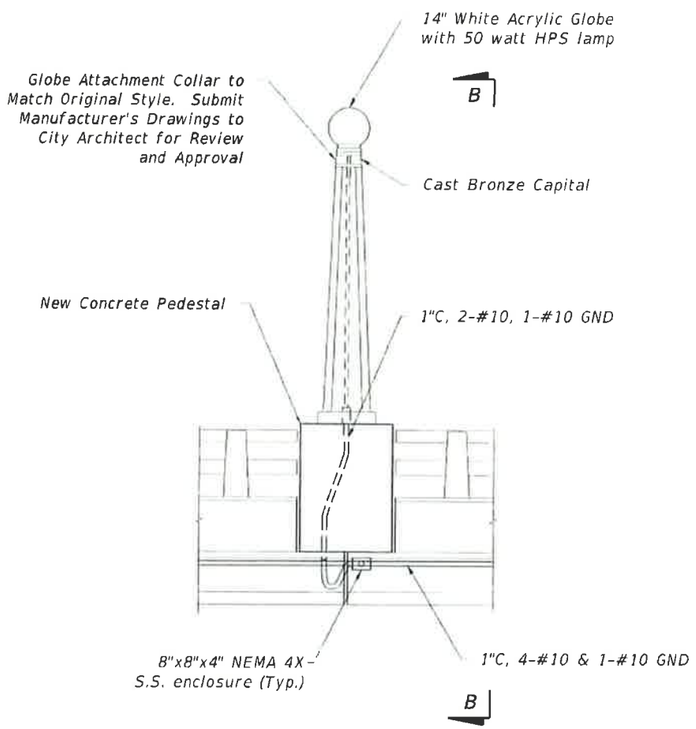

CONCRETE POLE DETAIL

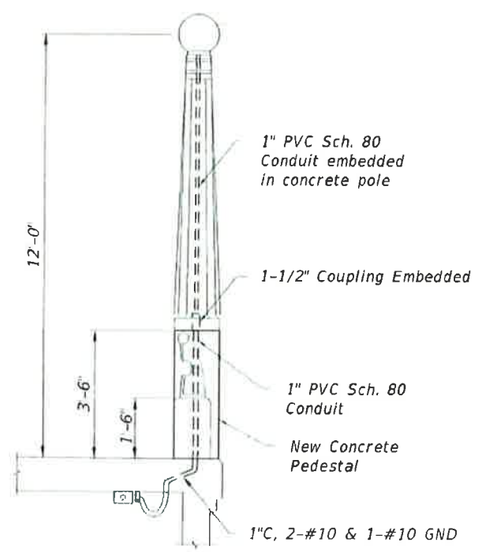

SECTION B-B

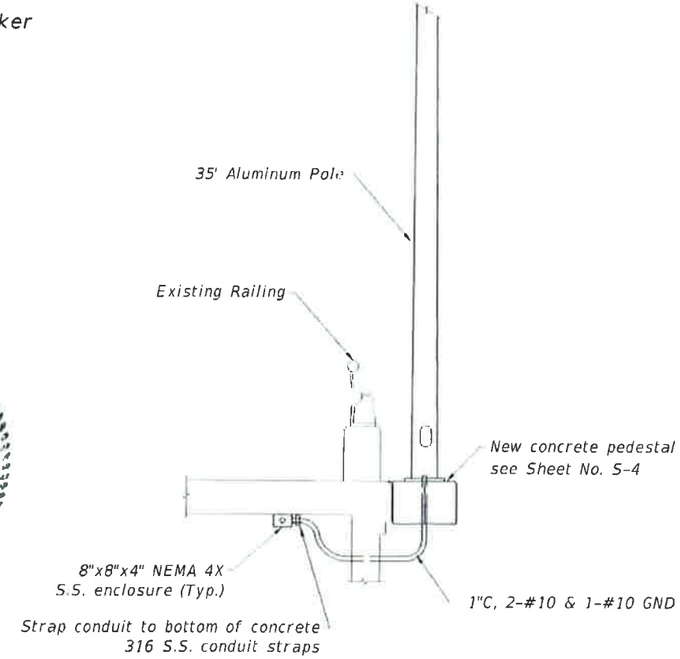

BRIDGE MOUNTED POLE

REVISIONS

DATE	BY	DESCRIPTION	DATE	BY	DESCRIPTION

	NAME	DATE
DRAWN BY	RFN	06-14
CHECKED BY	MAL	06-14
DESIGNED BY	RFN	06-14
CHECKED BY	MRS	08-14
APPROVED BY	M.R. SAKALES	

ENGINEER OF RECORD:
MICHAEL R. SAKALES, P.E.
P.E. License No: 67588
URS CORPORATION SOUTHERN
7650 West Courtney Campbell Causeway
Tampa, Florida 33607
Certificate of Authorization No. 0002

TRANSPORTATION DIVISION
DEPARTMENT OF PUBLIC WORKS
CITY OF TAMPA, FLORIDA

SHEET TITLE: LIGHTING DETAILS (1 OF 2)

PROJECT NAME: LAUREL STREET BRIDGE NO. 105503 OVER THE HILLSBOROUGH RIVER

SHEET NO. L-7

URS CORPORATION 8/25/2014 4:06:50 PM C:\SS9943\Laurel Street\Lighting\L-7 LIGHTING DETAILS.dgn

NOTICE: THE OFFICIAL RECORD OF THIS SHEET IS THE ELECTRONIC FILE SIGNED AND SEALED UNDER RULE 61G15-23.003, F.A.C.

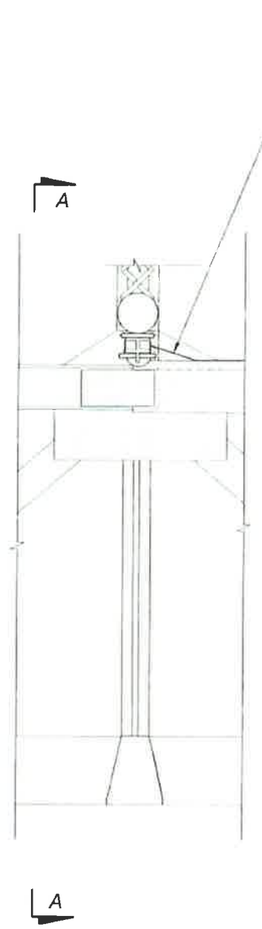

FIXTURES ON THE BASCULE LEAF

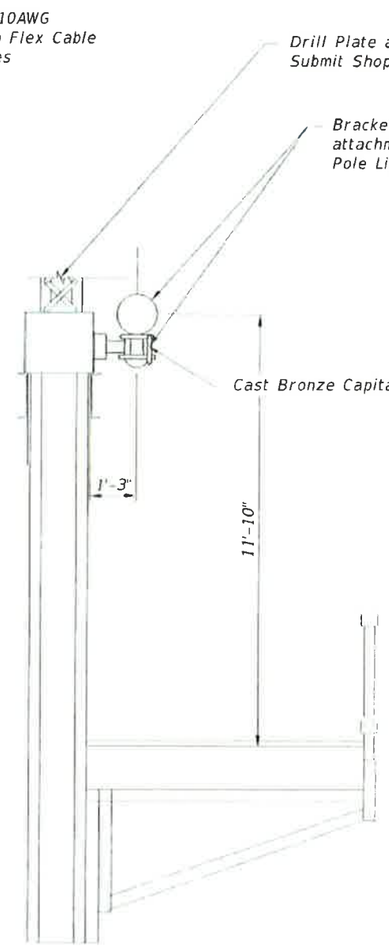

SECTION A-A

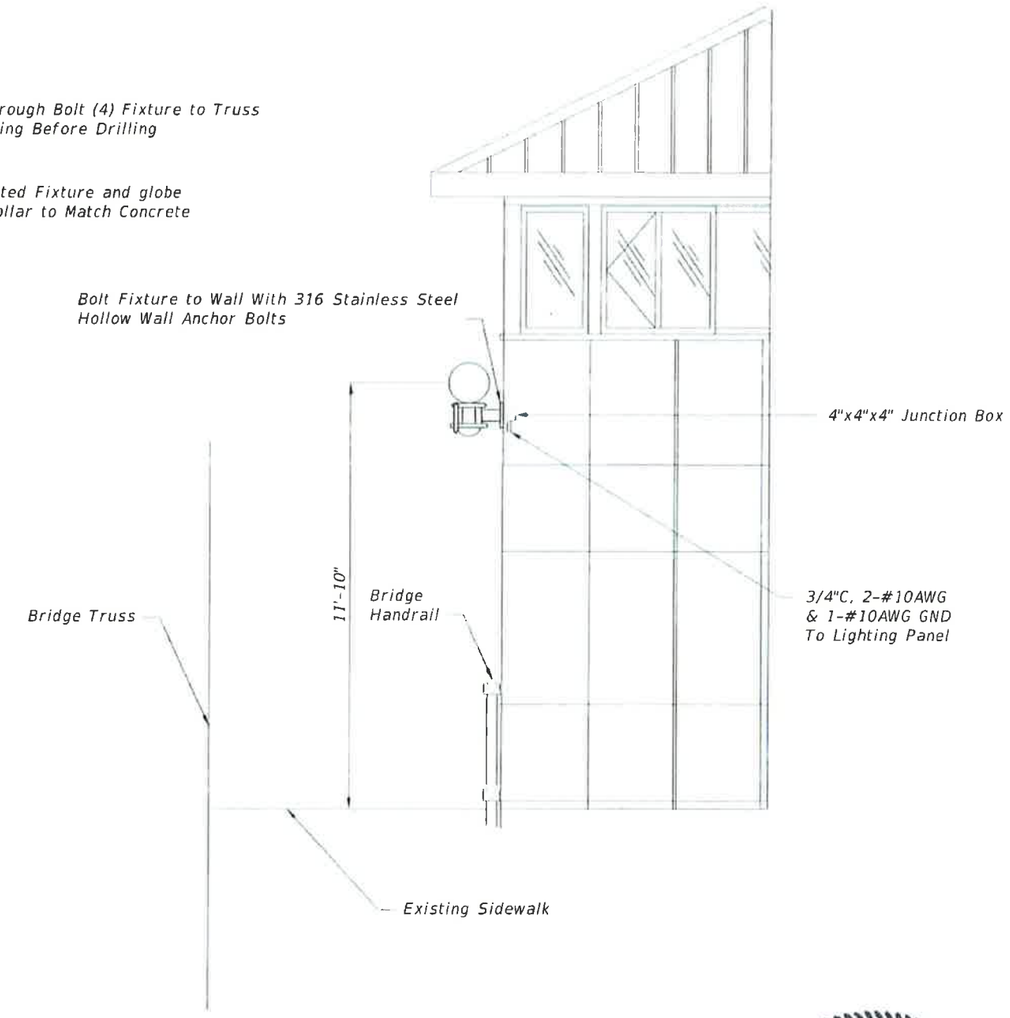

WALL MOUNT FIXTURE ON TENDER HOUSE

MICHAEL ROY SAKALES
LICENSE
No. 67588
8/15/14
STATE OF
FLORIDA
PROFESSIONAL ENGINEER

NOTICE: THE OFFICIAL RECORD OF THIS SHEET IS THE ELECTRONIC FILE SIGNED AND SEALED UNDER RULE 61G15-23.003, F.A.C

REVISIONS

DATE	BY	DESCRIPTION	DATE	BY	DESCRIPTION

	NAME	DATE
DRAWN BY	RFN	06-14
CHECKED BY	MAL	06-14
DESIGNED BY	RFN	06-14
CHECKED BY	MRS	08-14
APPROVED BY	M.R. SAKALES	

ENGINEER OF RECORD:
MICHAEL R. SAKALES, P.E.
P.E. License No: 67588
URS CORPORATION SOUTHERN
7650 West Courtney Campbell Causeway
Tampa, Florida 33607
Certificate of Authorization No. 0002

TRANSPORTATION DIVISION
DEPARTMENT OF PUBLIC WORKS
CITY OF TAMPA, FLORIDA

SHEET TITLE: LIGHTING DETAILS (2 OF 2)

PROJECT NAME: LAUREL STREET BRIDGE NO. 105503
OVER THE HILLSBOROUGH RIVER

SHEET NO. L-8

SCOPE OF WORK

The work under this contract includes structural modifications that are associated with electrical rehabilitation to install new roadway lighting and pedestrian/sidewalk lighting systems along the single leaf bascule bridge.

Demolish localized areas of the concrete bridge railings and reconstruct the railings to provide new concrete pylons and anchorages for new precast concrete pedestrian lighting poles. Remove existing roadway lighting poles and reconstruct localized concrete areas along the bridge copings to provide attachment for new roadway lighting poles.

GENERAL NOTES

1. GENERAL SPECIFICATIONS:

   Florida Department of Transportation Standard Specifications for Road and Bridge Construction dated 2014.

2. DESIGN SPECIFICATIONS:

   American Association of State Highway and Transportation Officials (AASHTO) LRFD Bridge Design Specifications, 6th edition, including the 2013 Interim Revisions.

   AASHTO LRFD Movable Highway Bridge Design Specifications, 2007 edition, including the 2008 Interim Revisions.

   FDOT Structures Design Guidelines (January 2014).

3. ENVIRONMENT:

   Superstructure - Extremely Aggressive
   Substructure - Extremely Aggressive

4. MATERIALS:

   A. CONCRETE:

   Concrete shall be in accordance with Section 346 of the Specifications. The following concrete shall be used:

Location	Class	f'c
- All Cast in Place Construction	IV	5,500 psi
- Precast Concrete Lightpoles	IV	5,500 psi

   Size No. 8 or No. 89 Coarse Aggregate may be substituted for size No. 57 or No. 67 Coarse Aggregate in accordance with Section 346-2.4 of the FDOT Standard Specifications, for the new cast-in-place construction and the new precast concrete light poles.

   B. REINFORCING STEEL:

   All reinforcing steel shall be uncoated (black) bars conforming to ASTM A615, Grade 60.

5. CONSTRUCTION:

   A. CONCRETE CONSTRUCTION:

   i. Concrete Cover:
   Concrete covers shown in the Plans do not include placement and fabrication tolerances unless shown as "Minimum Cover". See Specifications for allowable tolerances.

   ii. Surface Finishes:

   C.I.P. Railings and Precast Railing Panels: Provide surface finish that closely match with existing concrete surface.

   iii. Construction Joints:

   Construction joints will be permitted only at locations indicated on the Plans. Additional construction joints or alterations to those shown shall require prior approval by the Engineer.

   iv. Construction Corners:

   Use chamfered forms for exterior concrete corners. Use chamfers that are 3/4-inch by 3/4-inch and that are mill-dressed on all sides to uniform dimensions.

6. DIMENSION VERIFICATION:

   The dimensions and details shown are based on limited information from the original design plans, shop drawings, and rehabilitation plans of the existing bridge (unless noted otherwise), and may not represent the as-built conditions. It is the Contractor's responsibility to verify all dimensions and conditions in the field before preparation of shop drawings and prior to ordering materials and beginning construction.

7. HAZARDOUS MATERIAL:

   There is no record of hazardous materials in the anticipated work areas.

8. CONSTRUCTION STAGING AND WORK AREAS:

   The Contractor shall provide off-site staging areas as required for staging all of its operations.

9. MAINTENANCE OF NAVIGATIONAL CHANNEL:

   Notify Mr. Mike Lieberum of the U.S. Coast Guard (USCG) office in Miami, Florida at (305)415-6744, prior to the commencement of construction activities, in advance of actions, during bridge construction or demolition which potentially effect waterway users, and prior to the placement of any floating construction equipment in the waterway. Notify the Coast Guard no less than 60 days in advance of actions which could potentially affect the waterway.

10. OPERATION OF EXISTING BRIDGE:

    City of Tampa will operate and maintain the bridge throughout the construction duration. Contact Buddy Evans at (813)610-0938 to coordinate operating and maintenance related issues prior to construction.

11. BRIDGE MOUNTED UTILITIES:

    The bridge carries sewer and potable water for the Control House and electrical service for bridge operation and lighting. Contractor shall coordinate phased removal and installation activities as needed to provide/maintain required utility services during construction.

TIMOTHY J. FARRELL
LICENSE
No. 37264
STATE OF FLORIDA
PROFESSIONAL ENGINEER
Timothy J. Farrell 8/15/14

REVISIONS					
DATE	BY	DESCRIPTION	DATE	BY	DESCRIPTION

	NAMES	DATES
DRAWN BY	SUC	07/14
CHECKED BY	TJF	07/14
DESIGNED BY	SUC	07/14
CHECKED BY	TJF	07/14
APPROVED BY	T.J. FARRELL	

ENGINEER OF RECORD:
TIMOTHY J. FARRELL, P.E.
P.E. License No: 37264
URS CORPORATION SOUTHERN
7650 West Courtney Campbell Causeway
Tampa, Florida 33607
Certificate of Authorization No. 0002

TRANSPORTATION DIVISION
DEPARTMENT OF PUBLIC WORKS
CITY OF TAMPA, FLORIDA

SHEET TITLE: STRUCTURAL SCOPE OF WORK AND GENERAL NOTES

PROJECT NAME: LAUREL STREET BRIDGE NO. 105503 OVER THE HILLSBOROUGH RIVER

SHEET NO. S-1

T.C. DRIVER 8/18/2014 8:48:58 AM F:\25189432 Laurel Street\Lighting\S-1 GeneralNotes.dgn

STRUCTURAL WORK REQUIRED:

(A) DEMOLISH LOCALIZED LENGTH OF EXISTING CONCRETE BRIDGE RAILING AND RECONSTRUCT BRIDGE RAILING TO PROVIDE NEW CONCRETE PYLON FOR ANCHORAGE OF NEW PRECAST CONCRETE PEDESTRIAN LIGHT POLE (15 LOCATIONS; SEE NOTE 1)

(B) FURNISH AND INSTALL NEW METAL PEDESTRIAN LIGHTING FIXTURE ON EXISTING STEEL TRUSS MEMBER (2 LOCATIONS; SEE NOTE 2)

(C) FURNISH AND INSTALL NEW METAL PEDESTRIAN LIGHTING FIXTURE ON EXISTING TENDER'S HOUSE (1 LOCATION; SEE NOTE 2)

(D) REMOVE EXISTING ROADWAY LIGHTING POLE AND ANCHORAGE HARDWARE AND FURNISH AND INSTALL NEW ANCHORAGE HARDWARE FOR BRIDGE ATTACHMENT OF NEW ROADWAY LIGHTING POLE (3 LOCATIONS; SEE NOTE 3)

(E) FURNISH AND INSTALL NEW OFF-BRIDGE ANCHORAGE ASSEMBLY FOR NEW ROADWAY LIGHTING POLE (1 LOCATION; SEE NOTE 4)

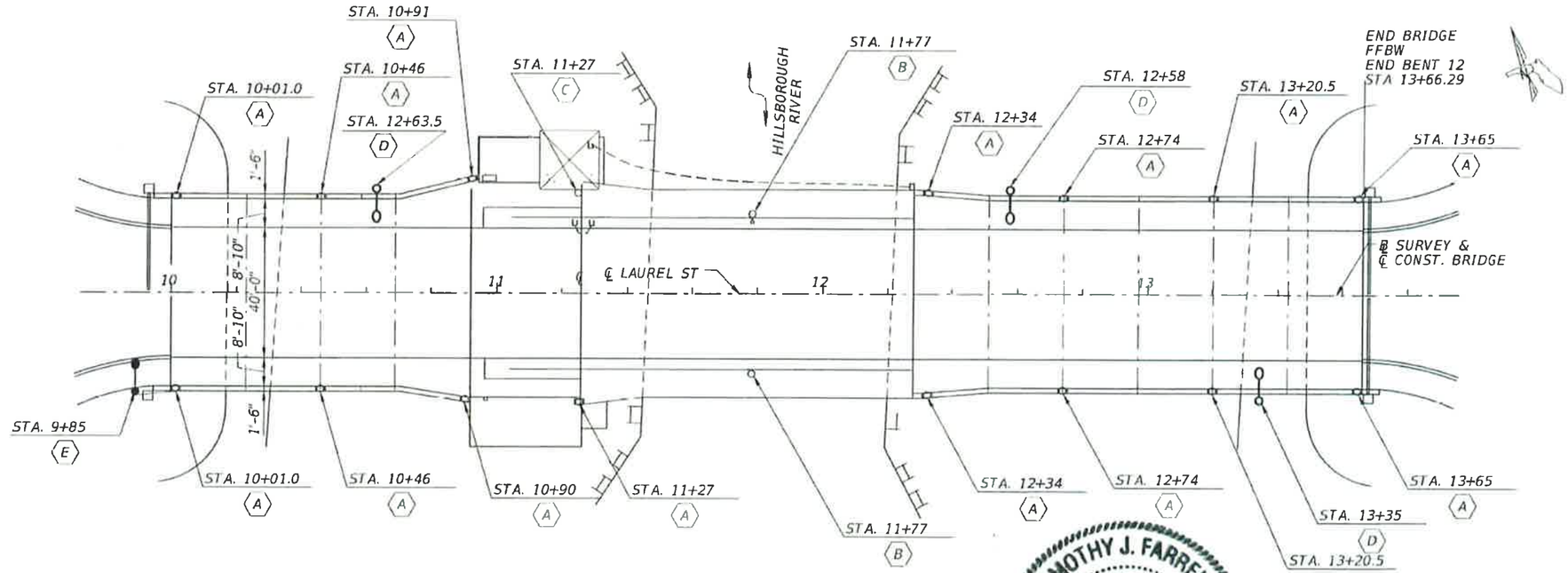

PLAN

TIMOTHY J. FARRELL
LICENSE
No. 37264
STATE OF FLORIDA
PROFESSIONAL ENGINEER
8/13/14

NOTES:

1. FOR EXISTING CONCRETE BRIDGE RAILING DEMOLITION AND RECONSTRUCTION DETAILS, SEE SHEET NO. S-3.
2. CONTRACTOR TO SUBMIT PROPOSED DETAILS FOR ATTACHMENT OF NEW METAL PEDESTRIAN LIGHTING FIXTURES TO EXISTING STEEL TRUSS MEMBERS AND THE EXISTING TENDER'S HOUSE; SEE LIGHTING PLANS FOR ADDITIONAL INFORMATION AND REQUIREMENTS .
3. FOR EXISTING CONCRETE SIDEWALK MODIFICATIONS AND NEW STRUCTURE MOUNTED ROADWAY LIGHTING POLE ATTACHMENT DETAILS, SEE SHEET NO. S-4.
4. FOR OFF-BRIDGE ROADWAY LIGHTING POLE ANCHORAGE DETAILS, SEE FDOT DESIGN STANDARDS INDEX NO. 17500.

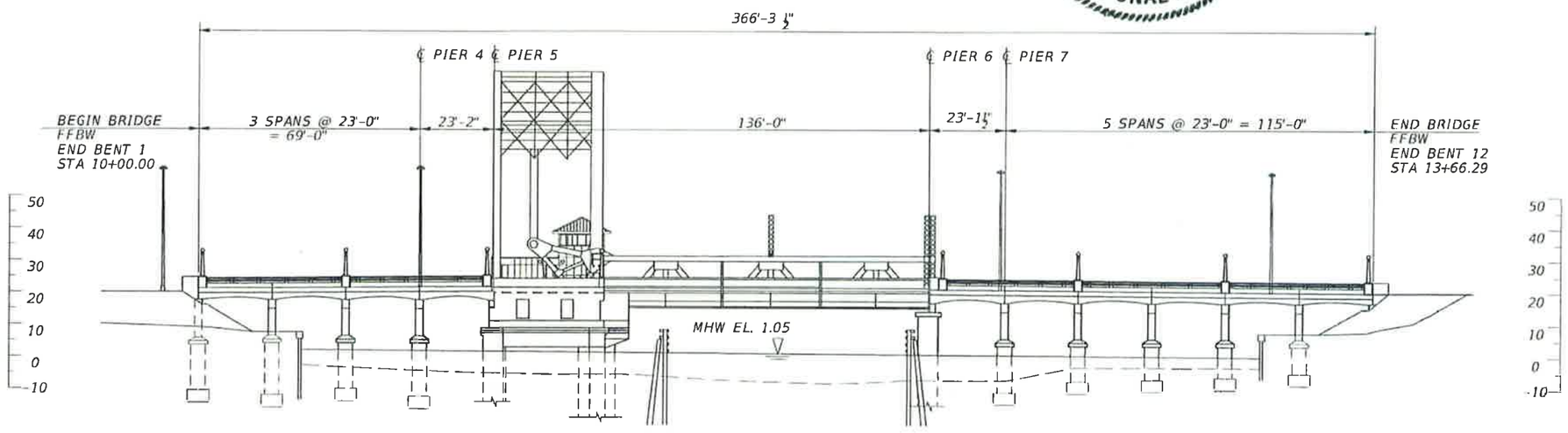

SOUTH ELEVATION

REVISIONS					
DATE	BY	DESCRIPTION	DATE	BY	DESCRIPTION

	NAME'S	DATES
DRAWN BY	MAL	05-14
CHECKED BY	TJF	07-14
DESIGNED BY	SUC	05-14
CHECKED BY	TJF	07-14
APPROVED BY	T.J. FARRELL	

ENGINEER OF RECORD:
TIMOTHY J. FARRELL, P.E.
P.E. License No: 37264
URS CORPORATION SOUTHERN
7650 West Courtney Campbell Causeway
Tampa, Florida 33607
Certificate of Authorization No. 0002

TRANSPORTATION DIVISION
DEPARTMENT OF PUBLIC WORKS
CITY OF TAMPA, FLORIDA

SHEET TITLE: STRUCTURAL LIGHTING LOCATION PLAN AND ELEVATION

PROJECT NAME: LAUREL STREET BRIDGE NO. 105503 OVER THE HILLSBOROUGH RIVER

SHEET NO. 5-2

E.C. DRIVER 8/18/2014 8:11:58 AM F:\95599432 Laurel Street\Lighting\S-2 STRUCT MODIFICATIONS.dgn

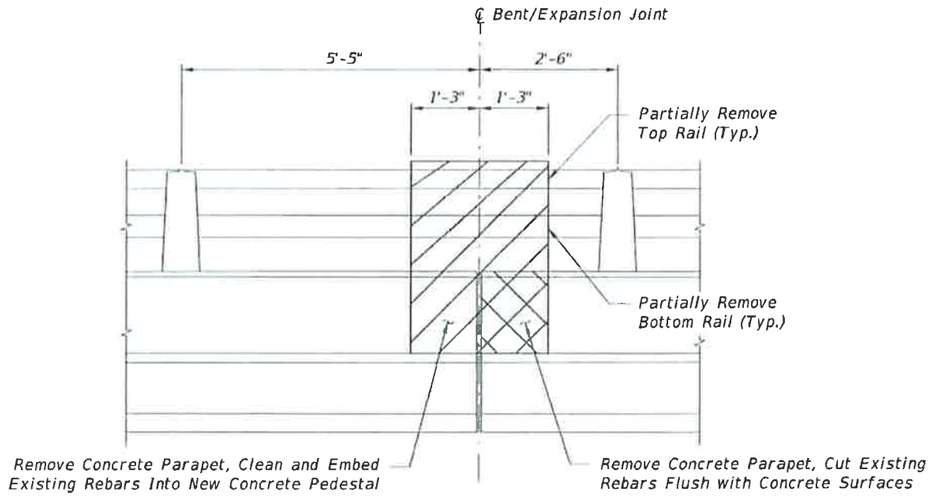

CURB AND RAIL DEMOLITION DETAIL

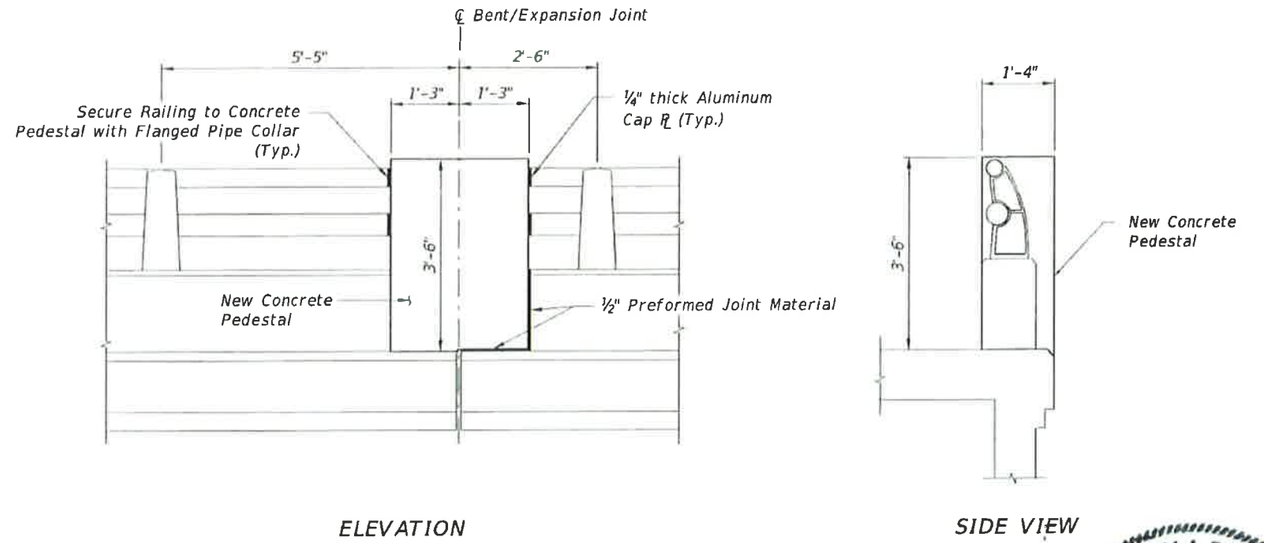

ELEVATION

SIDE VIEW

NEW CONCRETE PEDESTAL DETAIL

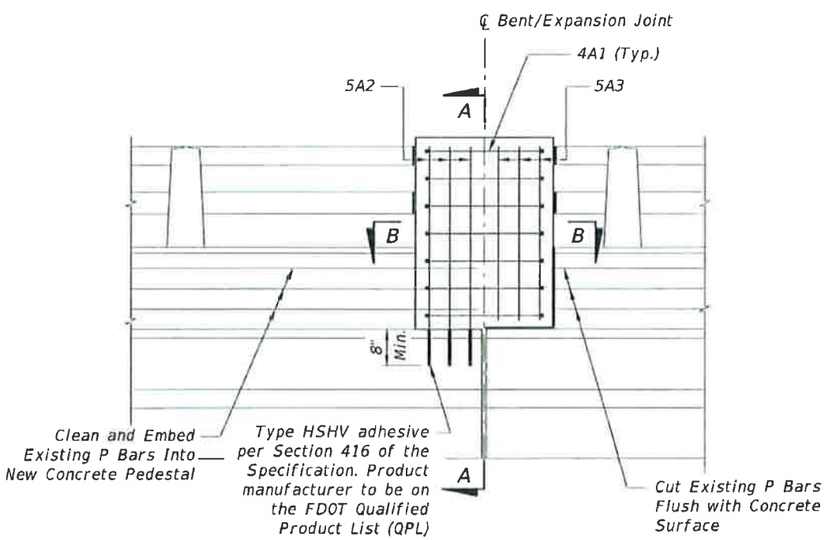

REINFORCING STEEL ELEVATION

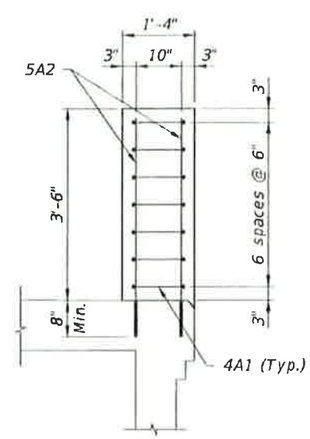

SECTION A-A

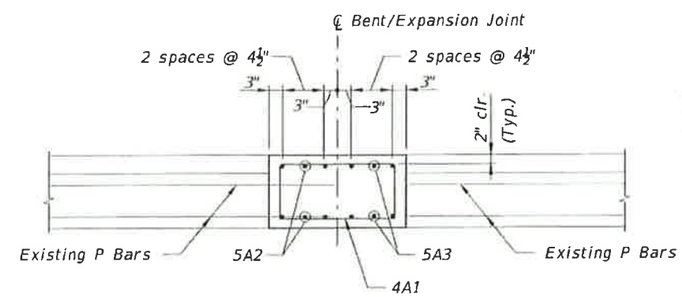

SECTION B-B

Note:
For Lighting Conduit and Fixture Details, see Sheet No. L-7.

*SUMMARY OF QUANTITIES	
Concrete	0.4 CY
Reinforcing Steel	219.7 lbs.

* Quantities are for One Pedestal

MARK SIZE	MARK DES	LENGTH FT	LENGTH IN	NO BARS	TYP BAR	STY A	STY G	B FT	B IN	B FR	C FT	C IN	C FR	D FT	D IN	D FR	E FT	E IN	E FR	F FT	F IN	F FR	H FT	H IN	H FR	J FT	J IN	J FR	K FT	K IN	K FR	N NO	Ø ANG
LOCATION ROADWAY LIGHT POLE PEDESTAL																							NO. REQUIRED = 15										
4	A1	7-	1	6	4	4	4	1-	0		2-	2																					
5	A2	4-	0	6	1			4-	0																								
5	A3	3-	2	6	1			3-	2																								
END OF LIST																																	

TIMOTHY J. FARRELL
LICENSE No. 37264
STATE OF FLORIDA
PROFESSIONAL ENGINEER
8/15/14

REVISIONS					
DATE	BY	DESCRIPTION	DATE	BY	DESCRIPTION

	NAME	DATES
DRAWN BY	SUC	07/14
CHECKED BY	TJF	07/14
DESIGNED BY	SUC	07/14
CHECKED BY	TJF	07/14
APPROVED BY	T.J. FARRELL	

ENGINEER OF RECORD:
TIMOTHY J. FARRELL, P.E.
P.E. License No: 37264
URS CORPORATION SOUTHERN
7650 West Courtney Campbell Causeway
Tampa, Florida 33607
Certificate of Authorization No. 0002

TRANSPORTATION DIVISION
DEPARTMENT OF PUBLIC WORKS
CITY OF TAMPA, FLORIDA

SHEET TITLE: CONCRETE PEDESTAL DETAILS

PROJECT NAME: LAUREL STREET BRIDGE NO. 105503 OVER THE HILLSBOROUGH RIVER

SHEET NO. S-3

E.C. DRIVER 8/18/2014 8:11:09 AM F:\N5899432 Laurel Street\Lighting\S-3 PEDESTAL DETAILS.dgn

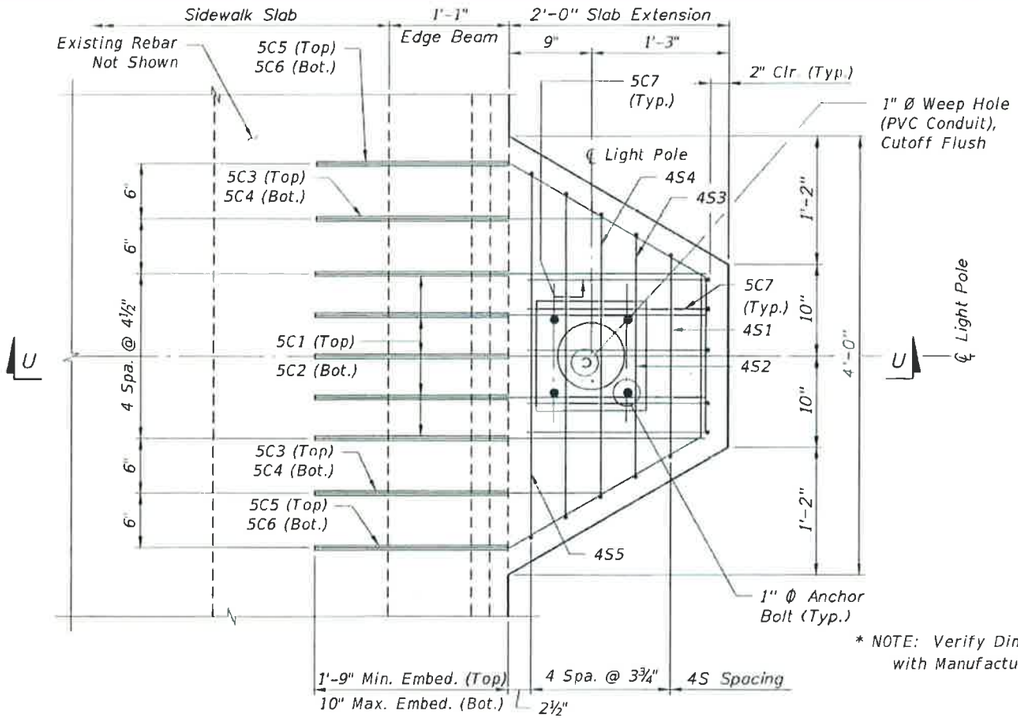

* NOTE: Verify Dimensions with Manufacturer.

PLAN VIEW - SLAB EXTENSION
ROADWAY LIGHT POLE TO BE MOUNTED AT
(Sta. 12+63.50, Sta. 12+58.00 & Sta. 13+35)

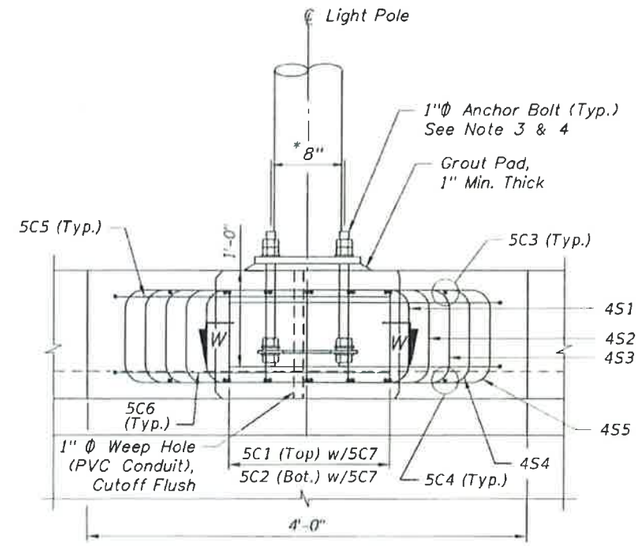

VIEW V-V

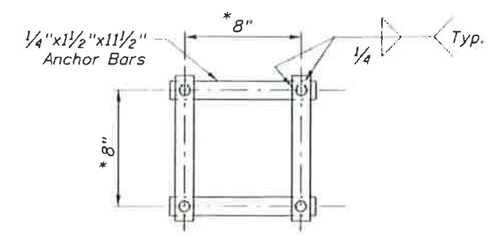

SECTION W-W

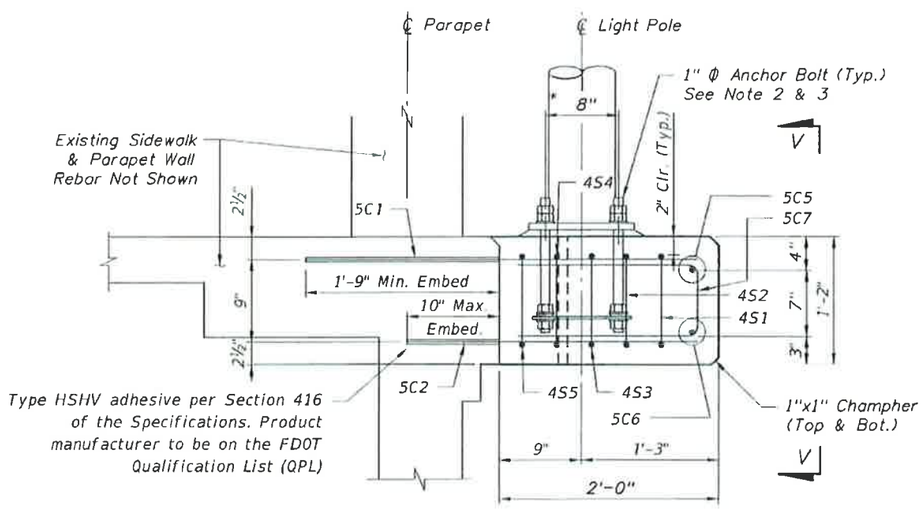

SECTION U-U

NOTES:

1. For locations of Light Poles, See Sheet No. S-1.
2. Materials:
   Anchor Bolts: ASTM F1554 Grade 55
   Nuts: ASTM A563 Grade A Heavy-Hex
   Washers: ASTM F436 Type 1
3. All Nuts, Bolts, and Washers shall be galvanized per ASTM F2329. Anchor Bolts must be installed plumb. Grout shall comply with FDOT Specification Section 934.
4. For Conduit, Pull Box, Expansion/Deflection Fittings, See Electrical Sheets.

*SUMMARY OF QUANTITIES	
Concrete	0.3 CY
Reinforcing Steel	336.9 lbs.

* Quantities are for One Pilaster

MARK SIZE	MARK DES	LENGTH FT IN	NO BARS	TYP BAR	STY A	STY G	B FT IN FR	C FT IN FR	D FT IN FR	E FT IN FR	F FT IN FR	H FT IN FR	J FT IN FR	K FT IN FR	N NO	Ø ANG
LOCATION LIGHT POLE PILASTER											NO. REQUIRED = 3					
5	C1	3- 7	5	1			3- 7									
5	C2	2- 8	5	1			2- 8									
5	C3	2- 8	2	1			2- 7 ½									
5	C4	1- 9	2	1			1- 8 ½									
5	C5	5- 3	2	13			2- 0	1- 6	1- 9						30	60
5	C6	4- 4	2	13			2- 0	1- 6	0-10						30	60
5	C7	4- 1	5	11			0- 9	1- 8	1- 8							
4	S1	5-11	1	4	4	4	0-10	1- 9								
4	S2	6- 9	2	4	4	4	2- 2	0-10								
4	S3	7- 5	1	4	4	4	2- 6	0-10								
4	S4	8- 3	1	4	4	4	2-11	0-10								
4	S5	8-11	1	4	4	4	3- 3	0-10								
END OF LIST																

TIMOTHY J. FARRELL
LICENSE
No. 37264
STATE OF FLORIDA
PROFESSIONAL ENGINEER
8/19/14

REVISIONS					
DATE	BY	DESCRIPTION	DATE	BY	DESCRIPTION

	NAMES	DATES
DRAWN BY	SUC	07/14
CHECKED BY	TJF	07/14
DESIGNED BY	SUC	07/14
CHECKED BY	TJF	07/14
APPROVED BY	T.J. FARRELL	

ENGINEER OF RECORD:
TIMOTHY J. FARRELL, P.E.
P.E. License No: 37264
URS CORPORATION SOUTHERN
7650 West Courtney Campbell Causeway
Tampa, Florida 33607
Certificate of Authorization No. 0002

TRANSPORTATION DIVISION
DEPARTMENT OF PUBLIC WORKS
CITY OF TAMPA, FLORIDA

SHEET TITLE: LIGHT POLE PILASTER DETAILS

PROJECT NAME: LAUREL STREET BRIDGE NO. 105503
OVER THE HILLSBOROUGH RIVER

SHEET NO. S-4

E.C. DRIVER 8/18/2014 8:18:10 AM F:\95899432 Laurel Street\Lighting\S-4 PILASTER.dgn

EXISTING PLANS

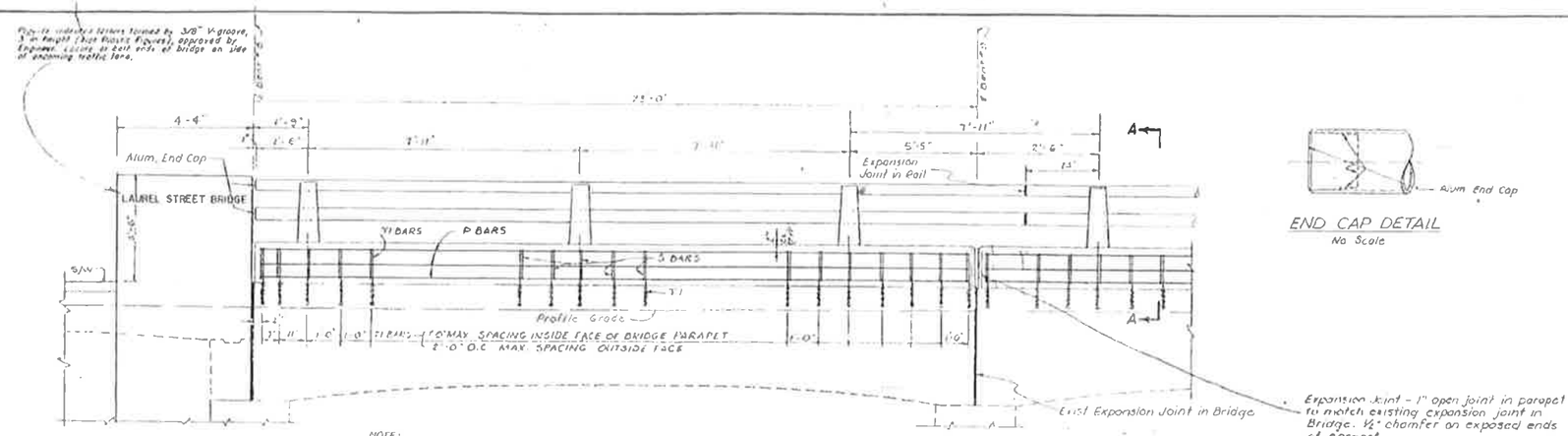

NOTE:
Existing vertical 5/8" ø reinforcing bars shall be preserved when concrete railing is removed, and used in lieu of masonry anchors and T-Bars. See Sheet 102 for location of bars.

PART ELEVATION OF HANDRAIL AND PARAPET
Not to Scale

END CAP DETAIL
No Scale

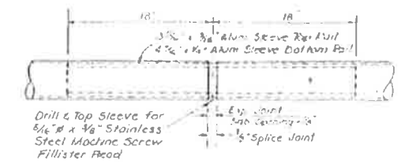

EXPANSION JOINT & SPLICE JOINT DETAIL
HANDRAIL
No Scale

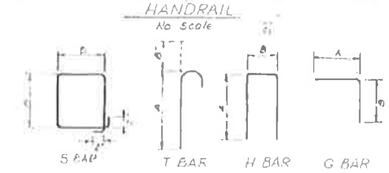

BENDING DIAGRAM

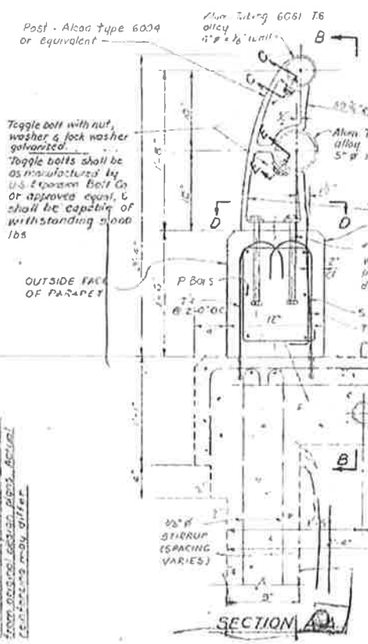

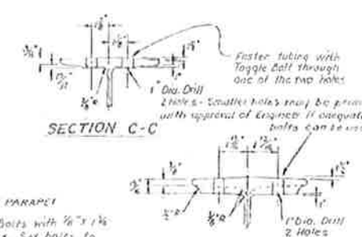

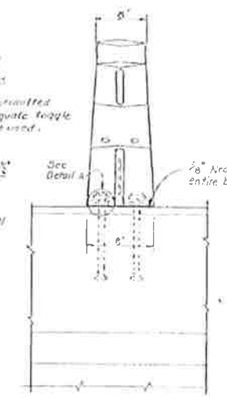

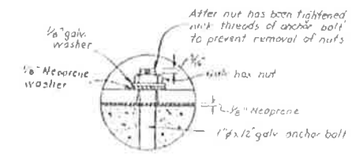

DETAIL A
No Scale

NOTE Alum end caps shall be placed in tubing ends of handrail

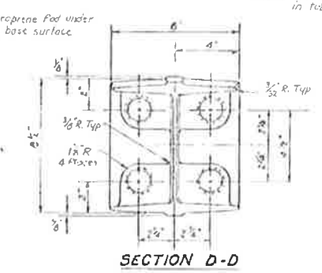

PARAPET AND END BLOCKS
BILL OF REINFORCING STEEL

MARK	SIZE	NO. REQ'D.	A	B	LENGTH	REMARKS
G	5	6	1'-7	1'-7	3'-1 1/2"	SEE BENDING DIAGRAM
H	5	1	3'-4"	8"	7'-3	" " "
J1	4	44			2'-0	
J2	4	6			3'-8"	
J3	4	14			2'-9"	
J4	4	8			2'-6"	
J5	4	8			2'-9	
K1	5	8			7'-5"	
K2	5	2			2'-5	
K3	5	2			6'-10"	
P1	5	24			22'-7"	
P2	5	36			22'-6"	
P3	5	12			24'-6 1/2"	
P3	5	12			23'-0"	NOTE P6 HAS BEEN OMITTED
P6	5	12			22'-2 1/2"	
P7	5	12			22'-5 1/2"	
P8	5	12			23'-2 1/2"	
S	4	438	1'-2"	8"	4'-0"	SEE BENDING DIAGRAM
T1	*5	680	1'-6"		2'-2"	" " "
T2	5	16	10'-1		10'-8"	" " "
BACKWALL						
E1	5	12			29'-10"	
E2	5	8			6'-7"	
F1	6	18			3'-7"	
F2	6	18			2'-7"	
F3	6	20			3'-10"	

* USE No 5 BAR WITH ANCHOR SHIELD ALTERNATE

HANDRAIL NOTES:

1. ALUMINUM POSTS SHALL BE CAST AND SHALL BE ALUMINUM ASSN. ALLOY A394-T6.
2. ALUMINUM RAILING SHALL CONFORM TO THE REQUIREMENTS OF ASTM D221, ALLOY 6061-T6 OR 6062-T6
3. ANCHOR BOLTS, NUTS AND WASHERS FOR THE ALUMINUM HANDRAIL SHALL BE HOT DIP GALVANIZED STEEL
4. EXPANSION JOINT IN RAILING SHALL BE PROVIDED TO CORRESPOND TO THE EXPANSION JOINTS IN THE BRIDGE DECK. THE SHORT DISTANCE BETWEEN EXPANSION JOINTS SHOULD ELIMINATE THE NEED FOR ADDITIONAL CONTROL JOINTS IN THE RAILING.
5. CONTRACTOR SHALL SUBMIT, FOR APPROVAL OF THE ENGINEER, SHOP DRAWINGS COVERING THE FABRICATION INFORMATION AND DIMENSIONS OF THE HANDRAIL. ALL DIMENSIONS SHALL BE VERIFIED IN FIELD BY CONTRACTOR PRIOR TO SUBMITTAL OF SHOP DRAWINGS.

NOTE:
T BAR LENGTH INCLUDES 2" INCREMENT FOR THREADED PORTION TO FIT IN INSERT.

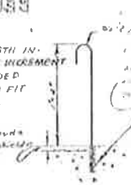

T BAR DETAIL

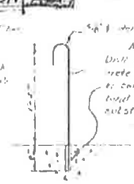

T BAR ALTERNATE DETAIL

ALT MASONRY ANCHOR
Drill 1/2" x 4 1/2" deep hole in concrete. Set bar in hole with epoxy mortar to completely fill hole and solidly bond rod to concrete. A D bar may be substituted for each pair of T bars - with Engr. approval.
NOTE: Contractor at his option may use this detail.

EPOXY NOTES:
1. ALL EPOXY COMPOUNDS AND THE USE OF SAME ON THIS PROJECT SHALL CONFORM TO REQUIREMENTS OF FLORIDA S.R.D. SPECIFICATIONS, NEW ROAD AND BRIDGE CONSTRUCTION, SECTION 926, 1966 EDITION
2. SAND USED FOR EPOXY MORTAR SHALL BE 100% DRY. SOLVENTS SHALL NOT BE USED ON THE EPOXY UNLESS DIRECTED BY THE ENGINEER.

RAILING DETAILS

PUBLIC WORKS DEPARTMENT
CITY OF TAMPA, FLORIDA
RIVERFRONT (WEST SIDE)
URBAN RENEWAL PROJECT
LAUREL ST. BRIDGE
STRUCTURAL MODIFICATIONS

Scale Noted	Book No.
Drawn J.D. "H.S."	Date 2-10-69
Designed D.W.F.	Date 2-10-69
Reviewed	Date
Approved	Date
NO 99 OF 108 SHEETS	FILE NO. C-25-9

EB-1