TENT

RENTAL DIVISION

OF THE INDUSTRIAL FABRICS ASSOCIATION INTERNATIONAL

THE IFAI PROCEDURAL HANDBOOK FOR THE SAFE INSTALLATION AND MAINTENANCE OF TENTAGE

Second Edition

An IFAI DIVISION

www.tentexperts.org

©2004 IFAI Tent Rental Division

Copyright © 1996, 2004 by
the Tent Rental Division of the Industrial Fabrics Association International

All rights reserved. First edition 1996, second edition 2004.

No part of the contents of this book may be reproduced or transmitted in any form or by any means without the written permission of the publisher.

NOTICE AND DISCLAIMER

Industrial Fabrics Association International makes no representation or Warranty, either express or implied, as to:

(1) the fitness for any particular purpose of any of the information, designs, or standards contained in this manual or any products manufactured or constructed in accordance therewith; or

(2) merchantability of any such information, designs, standards, or products; or

(3) the accuracy, quality, or reliability of any such information, designs, standards, or products.

The use by any individual or entity of any such information, designs, standards, or products constitutes an acknowledgment and agreement by such individual or entity that Industrial Fabrics Association International has made no representation or warranty with respect to the fitness, merchantability, or quality of such information, designs, standards or products.

This manual supplements any instructions or warnings that are provided by the manufacturer of the tent. You should consult the manufacturer's instructions and warnings each time you install a tent. This manual does not replace the manufacturer's instructions and warnings. If you are unable to locate any instructions or warnings, consult your rental agent or the manufacturer. To avoid personal injury or property damage, read and follow the manufacturer's instructions and warnings and the supplemental information contained in this manual before you install a tent. In the event there is a conflict between the manufacturer's instructions and warnings and the instructions contained in this manual, always follow the manufacturer's instructions and warnings.

Industrial Fabrics Association International
1801 County Road B W., Roseville, MN 55113-4061 USA
+(1) 651/222-2508 • 800/225-4324 • Fax +(1) 651/631-9334
www.ifai.com

CONTENTS

Page

List of Figures . . . iii
Introduction . . . v
Contributors . . . vi

PART ONE: ***Pole-Supported Tents Through 60-Foot Widths***

1 Site Survey . . . 1
Safety Considerations . . . 1
2.1 Layout and Staking . . . 4
Traditional Methods . . . 4
Layout of Square-End Tents . . . 4
Layout of Round-End Tents . . . 5
Pre-Staking Methods . . . 5
Checking Whether the Tent is Squared . . . 5
Pre-Staking a Round-End Tent . . . 8
Safety Inspection . . . 8
2.2 Staking and Anchoring . . . 9
Safety Factors . . . 9
A Systematic Approach to Staking . . . 11
Engineering Principles . . . 11
Alternate Staking Methods . . . 16
Field Test Methods for Accumulating Tent Staking Data . . . 18
3 Poles . . . 22
Installation . . . 22
Safety Inspection . . . 24
4 Tensioning . . . 25
Tensioning a Square-End Tent . . . 25
Tensioning a Round-End Tent . . . 29
Repeated Tensioning . . . 29
Rope . . . 32
Knots . . . 33
5 Sidewalls . . . 35
Types of Sidewall Materials . . . 35
Installation of Sidewalls . . . 36
Sidewall Safety Considerations . . . 37
6 Safety and Maintenance . . . 38
Weather Effects . . . 38
Inspection Highlights . . . 39
Special Notes . . . 39

PART TWO: ***Bail-Ring Tents Through 100-Foot Widths***

1 Site Survey . . . 40
2 Layout and Staking . . . 41
Layout Procedure . . . 41
Center Line Method . . . 41
Perimeter Method . . . 42
3 Center Pole Assembly and Raising . . . 44
4 Fabric Top Installation . . . 47
5 Safety and Maintenance . . . 48

PART THREE: ***Pipe Frame-Supported Tents Through 60-Foot Widths***

1 Introduction . . . 49
Background . . . 49
Types . . . 50
Basic Physical Principles . . . 50
Elements of Pipe-Frame Strength . . . 51

 © 2004 IFAI Tent Rental Division

CONTENTS

Page

PART THREE: ***Pipe Frame-Supported Tents Through 60-Foot Widths*** *(continued)*

2 Site Survey . . . 52
3 Layout, Assembly and Raising . . . 53
Layout . . . 53
Perimeter Assembly . . . 53
The Rafter System . . . 54
Fabric Top Installation . . . 54
Raising the Tent . . . 54
4 Staking and Anchoring . . . 55
5 Safety and Maintenance . . . 57

PART FOUR: ***Box-Beam Frame-Supported Tents Through 100-Foot Widths***

1 Introduction . . . 58
2 Site Survey . . . 59
3 Layout and Anchoring . . . 60
4 Assembly and Raising . . . 61
Parts Placement . . . 61
Component Assembly . . . 61
Raising of Arches/Beams . . . 61
Fabric Top Installation . . . 61
5 Safety and Maintenance . . . 62
Safety Checklist . . . 62
Maintenance Guidelines . . . 63

PART FIVE: ***Tensile Structure Rental Tents***

1 Introduction . . . 64
Fabric Superstructure . . . 64
Load Factors . . . 65
Installation and Tensioning . . . 65
Over-Tensioning . . . 66
2 Site Survey . . . 67
Utilities . . . 67
Access . . . 67
Terrain . . . 67
Site Surface . . . 68
Anchor Placement . . . 68
3 Layout and Staking . . . 69
Layout . . . 69
Stake and Anchor Placement . . . 70
Fabric Layout . . . 70
4 Poles . . . 71
Installation of Side Poles . . . 71
Installation of Main Poles . . . 72
Single Main Pole Configuration . . . 72
Twin Main Pole Configuration . . . 73
5 Tensioning . . . 74
6 Safety and Maintenance . . . 77
Inspection Highlights . . . 77
Special Notes . . . 77

APPENDIXES

A Staking Study . . . 78
B Building Code Sources . . . 79

GLOSSARY OF TENT TERMS . . . 80

 © 2004 IFAI Tent Rental Division

LIST OF FIGURES

Figure	Title	Page
1	Site Survey	2
2	Site Plan to Scale	3
3	Tent Data	3
4	Squaring the Tent	4
5	Determining the Length of the Diagonal	6
6	Diagonal Measurements of Common Tent Sizes	6
7a	Squaring a Tent Using the 3-4-5 Method	7
7b	Establishing Tent Perimeter—Round-End Tent	8
8	Stake Performance & Volume of Displaced Earth	11
9	Stake Performance & Zone of Displaced Earth	11
10	Stake Holding Power and Stake Depth	12
11	Soil Wedge Size and Sideways Resistance	12
12	Basic Soil Classifications	13
13	Stake Driving Angle	14
14	Pull Angles and Stake Location	14
15	Stake Knot Height	15
16	Various Tent Stakes	15
17	Double Staking	16
18	Double Staking Errors	16
19	Gang Staking	17
20	Buckle's Frog's Foot	17
21	Field Test Setup	18
22	General Stake Test Procedure	18
23	Sample Staking Data Sheet	19
24	Sample Test Form	20

 © 2004 IFAI Tent Rental Division

LIST OF FIGURES

Figure	Title	Page
25	Stress vs. Strain Graph for Stake Pull Test	21
26	Basic Clove Hitch	22
27	Securing the Jump Rope	22
28	Installing Center Poles	23
29	Alignment of Center Poles	24
30	Tensioning a 40' x 80' Square-End Tent	26
31	Tensioning a 60' x 120' Square-End Tent	28
32	Tensioning a 40' x 80' Round-End Tent	30
33	Tensioning a 60' x 120' Round-End Tent	31
34	Cordage Specifications	32, 33
35	Most Commonly Used Knots	34
36	Center Line Method of Layout	41
37	Perimeter Method of Layout with 3-4-5 Triangle	42
38	Staking Pattern for Center-Pole Guy Ropes	43
39	Tent with Center-Pole Guy Ropes—Side View	43
40	Typical Bail-Ring Tent Hardware Parts	44
41	Ground Assembly of Center Pole and Related Equipment	45
42	Center Pole and Guy Ropes Prior to Raising	45
43	Center Pole Raised with Bail Ring in Lowered Position	46
44	Suggested Stake Placement for Typical Frame Tent	55
45	Suggested Guy Rope Angle for Typical Frame Tent	56
46	Traditional Pole Tent Superstructure	64
47	Tensile Tensioning, Example 1	74
48	Tensile Tensioning, Example 2	75
49	Tensile Tensioning, Example 3	76

 © 2004 IFAI Tent Rental Division

INTRODUCTION

The purpose of this document is to provide a source of information aimed at installers, foremen and company owners that explains, in layman's terms, safe procedures for installing tents.

It is the product of several years of work by the Education Committee of the Tent Rental Division of IFAI, which was charged with the creation and acceptance of an industry-wide installation and maintenance document.

It is designed to educate novice as well as experienced tent renters on installation theory, with an emphasis on safety. This handbook may be used as a basic guide for tent installation. The goal is to clarify specific tenting theories, verifying as well as dispelling common tenting myths. The information presented here is based on the combined experience of the all volunteer Education Committee, with validated engineering data from an industry expert.

The committee was composed of volunteer tent installers and manufacturers, all of whom sought technical review of this document from a wide spectrum of the tent rental industry over the course of nine years.

The committee was founded as part of a continuing study to address the growing need in the industry for basic tenting knowledge. The members volunteered their time and expenses in an effort to educate all members of the Tent Rental Division of IFAI. The ultimate goal is to elevate quality and safety standards in the industry as a whole.

Jerry P. O'Connell, current Chairman
Education Committee,
Tent Rental Division of the
Industrial Fabrics Association International

Bernie Armbruster, past Chairman
Education Committee,
Tent Rental Division of the
Industrial Fabrics Association International

 © 2004 IFAI Tent Rental Division

CONTRIBUTORS—January 2004

Bernard Armbruster is president of Armbruster Manufacturing Company of Springfield, Illinois. He grew up working in the family business, starting in 1955 on tent crews and serving in various positions including vice president of manufacturing during his 40+ years in the industry. Armbruster is an active member of Industrial Fabrics Association International Tent Rental Division and has served in a variety of capacities, including sitting on the Standards Committee, Division Chairman and Education Committee Chairman. Armbruster was educated at Culver Military Academy and Tulane University.

Paul Buckles is the principal of Mountain/Mesa Eventwares, a manufacturers representative group for Anchor Industries in Colorado and Southwest USA. He started in tenting in 1981 as a field installer. For the ensuing seventeen years, he filled roles in sales and project management for Expressive Tents and AARCEE Party and Tent Rental in Minneapolis, Minnesota. Mr. Buckles has been affiliated with the IFAI Tent Rental Division since 1985 and has served on the Education Committee since its inception in 1992. He holds a History degree from Northwestern College, St. Paul, Minn.

Steve Frost is president of Stamford Tent and Party Rental, a 50 year old company located in Stamford, Connecticut. Frost started in 1967, the year that Stamford Tent was purchased by his family. He has served in various capacities, including foreman and manager, working toward his current position as President. He bought out their largest competitor (Deicke Tent) in 1986 and merged the two companies to create the current business. Frost has been an active member of Industrial Fabrics Association International since 1980. He has served as a speaker at the IFAI Tent Rental Division's Mid-Winter Conference. His company is the recipient of many International Achievement Awards from IFAI.

Harold L. Gallagher was president of Pike's Tent & Awning Limited of Toronto, Ontario, Canada. Gallagher had over 35 years experience in the tent rental industry. He started with Soper's in 1956 and later became a partner of American Tent in 1986. He was an active member of Industrial Fabrics Association International and served on the Education Committee of the Tent Rental Division. He also served as chairman of the Canadian Industrial Fabrics Institute (CIFI), a division of IFAI.

Bryan Loane is a partner in Loane Brothers Incorporated of Baltimore, Maryland. He started installing tents at the age of 8 and has had on the job training most of his life. Loane Brothers has been in the business of manufacturing, renting and installing tents since 1815. Loane Brothers has been a member of Industrial Fabrics Association International for over 60 years. Loane is a graduate of the University of Virginia.

Kevin McBride is a partner in P.J. McBride Incorporated of Farmingdale, New York. The company has been in existence for over 18 years. Patrick J. McBride, who recently celebrated his 45th year in the tent rental industry, started it in 1975. P.J. McBride Inc. has been a member of Industrial Fabrics Association International since 1975 and has been recognized with multiple International Achievement Awards. McBride is a graduate of New York Institute of Technology.

Andy Nolan is president of Chattanooga Tent Co., Chattanooga, Tenn., a 70-year old tent manufacturing and rental firm. He has been in the tent business for more than 36 years, and his company has been an IFAI member for more than 25 years. Nolan attended the University of Tennessee-Chattanooga.

Jerry P. O'Connell is President of HDO Productions L.P. of Rockville, Maryland. He has 40 years in the tent rental industry serving in such capacities as installation, sales and general management. HDO Productions has been an active member of Industrial Fabrics Association Tent Rental Division and has been recognized with multiple International Achievement Awards. O'Connell is a graduate of American University in Washington D.C.

Tom Wodetzki is a partner in American Pavilion Inc., Danville, Ill. He began his career in the family business at the age of 13 and has held such positions as tent installer, crew foreman and vice president of manufacturing. American Pavilion has been an IFAI member for more than 50 years and has won numerous International Achievement Awards. Wodetzki is a graduate of Arizona State University.

 © 2004 IFAI Tent Rental Division

TENT

RENTAL DIVISION

OF THE INDUSTRIAL FABRICS ASSOCIATION INTERNATIONAL

THE IFAI PROCEDURAL HANDBOOK FOR THE SAFE INSTALLATION AND MAINTENANCE OF TENTAGE

Part One

Pole-Supported Tents Through 60-Foot Widths

An IFAI DIVISION

CHAPTER ONE: Site Survey

1

A site survey or evaluation is the first of many important steps in the total organization of any safe tent rental function or event.

The major purposes of the site survey are to:

1. Gather all pertinent information regarding the proposed function or event.
2. Be certain that the correct equipment is used and is suited both to the location and function.
3. Organize this information so that it becomes an effective means of clear communication for all parties involved.
4. Serve as a permanent record of the entire transaction.

See the following figures:
Figure 1, Site Survey—Location, Surface, Underground & Overhead
Figure 2, Site Plan to Scale
Figure 3, Tent Data

The site survey should be completed by a qualified professional such as a sales consultant or job foreman and passed onto those responsible for the installation.

SAFETY CONSIDERATIONS

The importance of safety as related to the site survey cannot be over emphasized. Consideration should be given to:

- obstructions
- location
- weather
- wind exposure
- access
- exit
- anchoring stability

All tent installers must be aware of and adhere to the applicable building codes and fire regulations.

Finally, a complete quality checklist would assist in completing a safe installation and should be developed by each individual company.

 © 2004 IFAI Tent Rental Division

LOCATION, SURFACE, UNDERGROUND & OVERHEAD

For simplification, just mark appropriate boxes. Function Date _____

Function _____

_____

_____

_____

_____

Surface

❏ grass
❏ asphalt
❏ gravel
❏ concrete
❏ wood

Level? ❏ Yes ❏ No

Clear? ❏ Yes ❏ No (has constructions)

Describe _____

_____

_____

Underground (one answer minimum)

❏ electrical
❏ gas (including BBQ)
❏ telephone
❏ septic
❏ sprinklers
❏ pool lines
❏ none of the above

Describe _____

_____

_____

Person responsible for marking _____

Site Contact _____

Describe ground _____

(i.e., hard, soft, sandy, clay, etc.)

Overhead (one answer minimum)

❏ electrical
❏ telephone
❏ trees/branches
❏ other
❏ none of the above

Describe _____

_____

_____

Job Profile

❏ straightforward job
❏ technically difficult
❏ over trees
❏ attach to house
❏ cable for anchoring
❏ multiple levels
❏ over pool
❏ other

Describe _____

_____

_____

Special Equipment Considerations

_____

_____

_____

_____

Figure 1. *Site Survey*

 © 2004 IFAI Tent Rental Division

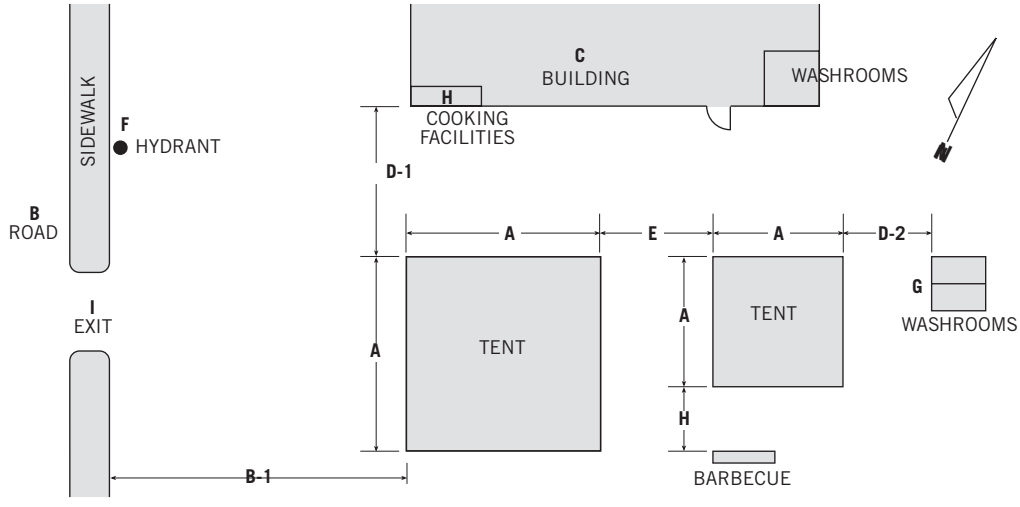

A Location of tent or tents and show sizes of tents.

B Roadways—give names. Note: Distance from sidewalks should be approximate.

C Adjacent buildings—show exits and facilities if being used.

D Dimensions between tent and adjacent buildings.

E Dimensions between tents.

F Location of fire hydrants.

G Location of washrooms.

H Locations of cooking facilities.

I Fire route.

Figure 2. *Site Plan to Scale*

ACTUAL EQUIPMENT TO BE RENTED

Tent Size	Tent No. & Color	Sections	Side Poles		Center & 1/4 Poles	Anchors			STL, STK	Hook
			Heavy	Light		SM.	SM.HVY.	LT.		

Site Plan Attached ❑ Yes ❑ No	Odd Size Poles	Wall ❑ Yes ❑ No Opaque _____ Clear _____ Fulcron _____

Figure 3. *Tent Data*

CHAPTER TWO, PART ONE: Layout and Staking

2.1

The purpose of part one of this chapter is to aid the tent installer in the safe layout and staking of a traditional pole tent using two different methods. A properly squared tent is aesthetically pleasing and is more structurally sound. Hence the chapter is divided into two parts: traditional methods and pre-staking methods.

TRADITIONAL METHODS

Layout of Square-End Tents

The traditional method is the easiest and most commonly used. Begin by placing the tent sections on the ground in accordance with the site plan. Then, if necessary, lace the sections together following the manufacturer's instructions. Once the tent is fully laced, it is necessary to stretch and square it. The object is to make the perimeter taut with the corners "squared." See ***Figure 4***. Smaller tents can be squared by pulling, simultaneously, all four corners diagonally from the center following the line of the hip. The larger, heavier tents may require a slightly different method (see following section on pre-staking). There will always be excess fabric in the interior portion of the tent due to the amount of material needed to make up the pitch of the tent.

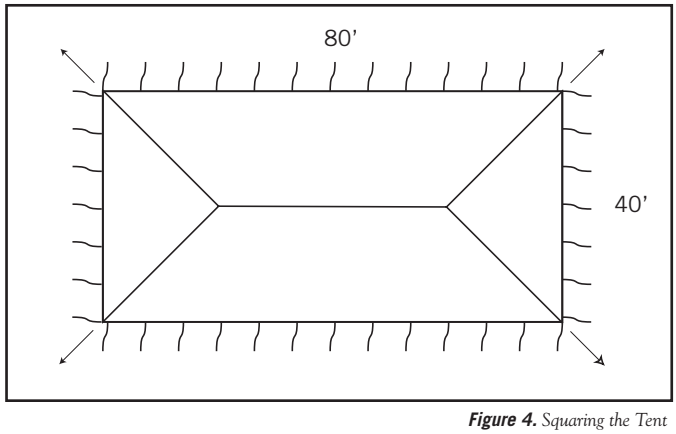

Figure 4. *Squaring the Tent*

Once one end of the tent is placed where desired, drive a small stake through each of the corner side pole grommets on that end. Then proceed down the length of the tent pulling every other rope out from the center and down from the end. It is important to work opposite someone and to pull each opposing rope simultaneously so the tent is not pulled out-of-square while it is being stretched.

Once this is accomplished, the tent is ready to be staked. Starting with each corner, measure out in both directions a distance equal to the heights of the side pole or slightly less. (Opinions vary widely on what the proper distance is from the base of the pole to the stake. Refer to the manufacturer's instructions to determine the exact distances.)

When all of the corners have been staked, run a string line from corner stake to corner stake. Then place a stake opposite each side pole grommet along the straight line.

 © 2004 IFAI Tent Rental Division

Layout of Round-End Tents

Stretching a round end tent uses virtually the same methods as a square-end tent except that the tent should be stretched and squared diagonally from the lace lines adjoining the end sections. After the middle sections are squared, pull out the perimeter of the round end. Be careful not to overpull or the middle will pull out-of-square. Remember there will be excess fabric left in the interior portion when finished.

Staking a round-end tent is done in a similar fashion to that of a square-end tent, making the appropriate adjustments for the placement of the stakes in line with the side-pole grommets on the round end.

PRE-STAKING METHODS

In certain instances where there are objects present that would preclude the possibility of fully stretching and squaring the tent, or if the tent is too large to be stretched, it may be necessary to pre-stake the area. The first step in this process is to lay out the perimeter of the tent using tape measures. Once the four corners have been located, the tent needs to be squared (all four corners must be at 90-degree angles).

Checking Whether the Tent is Squared

There are several ways to check whether the tent is squared.

Measuring the Diagonal

The easiest way is to measure the line that runs diagonally across the tent from corner to corner. As each size tent has a different diagonal length, it is important to know how to determine the proper length of the diagonal. The formula for determining this length is $A^2 + B^2 = C^2$ where A is the length of the tent, B is the width, and C is the diagonal. See ***Figure 5***.

EXAMPLE: The Diagonal for a 40' x 80' is 89.44', as follows:

$$A^2 + B^2$$

$$(40 \times 40) + (80 \times 80)$$

$$1600 + 6400 = 8000$$

$$\text{If } C^2 = 8000, \text{ then } C = \sqrt{8000} = 89.44$$

 © 2004 IFAI Tent Rental Division

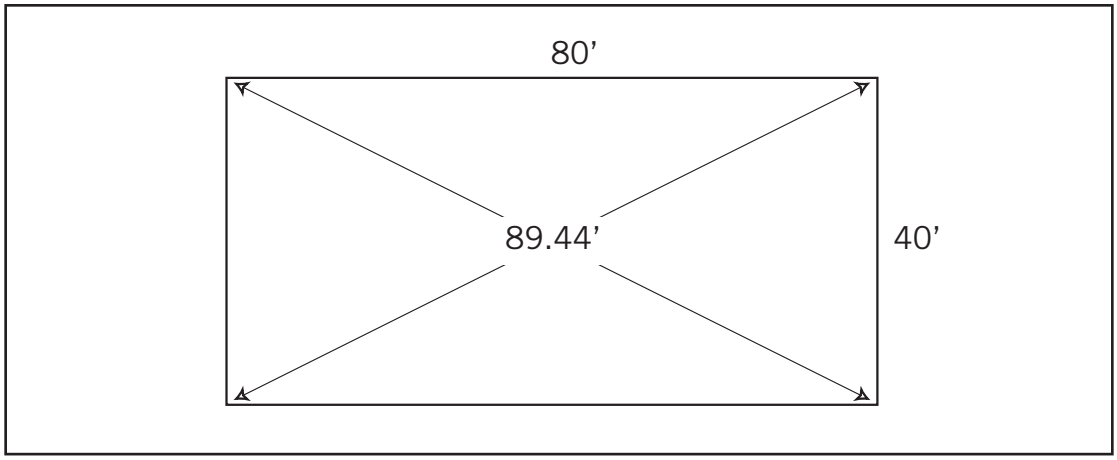

Figure 5. *Determing the Length of the Diagonal*

Now that the proper length for the diagonal has been determined, measure both diagonals to make sure they match. If the lengths do not match, the tent is not square. Move the corners until both diagonals are identical. It is helpful to have three or four large tape measures and two people when using this method. It is important to double-check both diagonals so that the tent does not end up out-of-square.

Figure 6 allows you to look up the diagonal measurements of common tent sizes.

	WIDTH OF TENT								
	20’	**30’**	**40’**	**50’**	**60’**	**70’**	**80’**	**90’**	**100’**
20’	28’3”	36’1”	44’9”	53’10”	63’3”	72’10”	82’6”	92’2”	102’0”
30’	36’1”	42’5”	50’0”	58’4”	67’1”	76’2”	85’5”	94’10”	104’5”
40’	44’9”	50’0”	56’7”	64’0”	72’1”	80’7”	89’5”	98’6”	107’8”
45’	49’3”	54’1”	60’3”	67’3”	75’0”	83’3”	91’9”	100’7”	109’8”
50’	53’10”	58’4”	64’0”	70’9”	78’1”	86’0”	94’4”	102’11”	111’10”
60’	63’3”	67’1”	72’1”	78’1”	84’10”	92’2”	100’0”	108’2”	116’7”
70’	72’10”	76’2”	80’7”	86’0”	92’2”	98’6”	106’4”	114’0”	122’1”
75’	77’7”	80’9”	85’0”	90’2”	96’0”	102’7”	109’8”	117’2”	125’0”
80’	82’6”	85’5”	89’5”	94’4”	100’0”	106’4”	113’2”	120’5”	128’1”
90’	92’2”	94’10”	98’6”	102’11”	108’2”	114’0”	120’5”	127’3”	134’6”
100’	102’0”	104’5”	107’8”	111’10”	116’7”	122’1”	128’1”	134’6”	141’5”
110’	111’10”	114’0”	117’1”	120’10”	125’4”	130’5”	136’0”	142’2”	148’8”
120’	121’8”	123’8”	126’6”	130’0”	134’2”	138’11”	144’3”	150’0”	156’2”
130’	131’6”	133’5”	136’0”	139’3”	143’2”	147’8”	152’8”	158’1”	164’0”
140’	141’5”	143’2”	145’7”	148’8”	152’4”	156’6”	161’3”	166’5”	172’0”
150’	151’4”	153’0”	155’3”	158’1”	161’7”	165’6”	170’0”	174’11”	180’3”
160’	161’3”	162’9”	164’11”	167’7”	170’11”	174’8”	178’11”	183’6”	188’8”
170’	171’2”	172’8”	174’8”	177’2”	180’3”	183’10”	187’11”	192’4”	197’3”
180’	181’1”	182’6”	184’5”	186’10”	189’9”	193’2”	197’0”	202’3”	205’11”
190’	191’1”	192’4”	194’2”	196’6”	199’3”	202’6”	206’2”	210’3”	214’9”
200’	201’0”	202’3”	204’0”	206’2”	208’10”	211’11”	215’5”	219’4”	223’7”
210’	211’0”	212’2”	213’9”	215’10”	218’5”	221’4”	224’8”	228’6”	232’7”
220’	221’0”	222’0”	223’7”	225’7”	228’0”	230’10”	234’1”	237’8”	241’8”

Figure 6. *Diagonal Measurements of Common Tent Sizes*

The 3-4-5 Method

When the tent is too long to make the measuring of the entire diagonal practical, an alternative would be to use the method known as 3-4-5.

This method uses the same triangulation, but on a much smaller scale. See ***Figure 7a***. Using the same 40-foot by 80-foot tent as an example, lay out the first two corners along the 40-foot width. This will become your "four" side. Next measure down the length 30 feet which becomes your "three" side. The distance from this point back to the first corner should be 50 feet ("five"). It may be necessary to move one or two of the points in order to achieve an accurate 3-4-5 triangle. Once the entire tent is marked out, it would be advisable to check at least one other corner to be certain the tent is square.

This method can be adapted to much larger tents quite easily, 30-40-50 becoming 60-80-100 and so on.

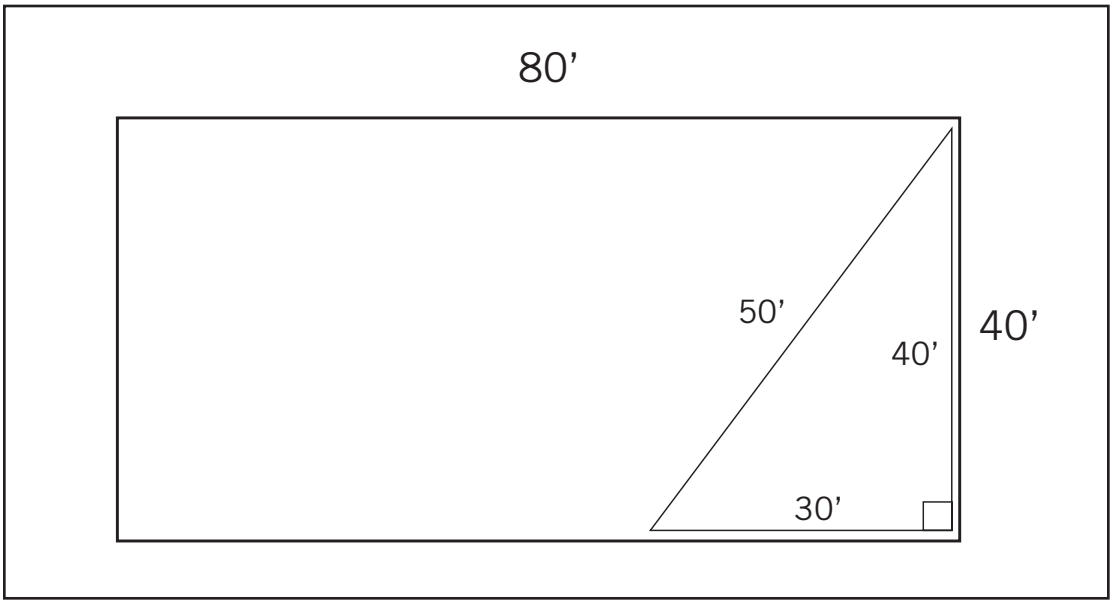

Figure 7a. *Squaring a Tent Using the 3-4-5 Method*

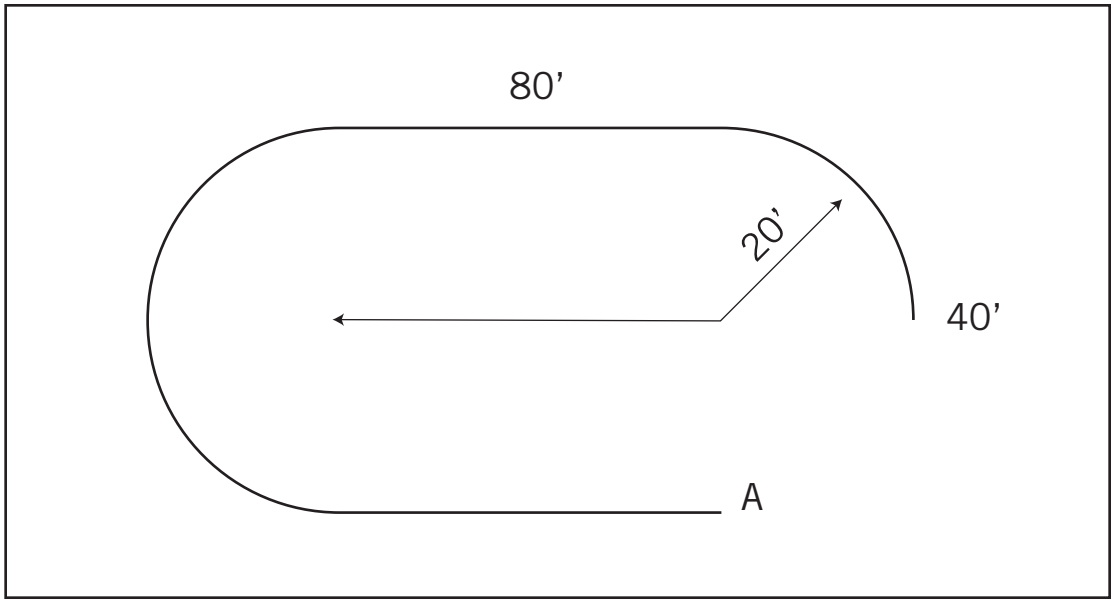

Figure 7b. *Establishing Tent Perimeter—Round-End Tent*

Pre-staking a Round-End Tent

When pre-staking a round-end tent, square the middle sections using either of the preceding methods. Establish the location of the end center pole (see ***Figure 7b***) by measuring in a distance equal to one-half the width of the tent from the point A of the last lace line. Place the tape at that location and measure a one-half circle from one side to the other recreating the perimeter of the round end. Now that the tent perimeter has been established, proceed to place the stakes as if the tent were physically in place using the method described earlier in this chapter. Refer to the tent manufacturer’s instructions to determine the proper stake spacing around the perimeter.

SAFETY INSPECTION

At this point in the installation, a safety inspection should be performed.

First, check the entire surface to make certain that there are no rips, tears, or defects in the fabric, paying special attention to all seams and weld points. Check all hardware, grommets, webbing, cables, etc. for any signs of fatigue or deterioration. Inspect each guy rope individually for fraying, tears, rot, splintering, or excessive stretching.

Should any irregularities be noticed, stop immediately and repair or replace the section as needed. Failure to do so could compromise the overall structural integrity.

Once the safety inspection is completed, you may proceed to the next step.

Whatever layout and staking method is used, the manufacturer’s instructions must be followed. Those instructions take precedence over any conflicting instructions that may be contained in this manual. In the event of a conflict, follow the manufacturer’s instructions and warnings.

CHAPTER TWO, PART TWO: Staking and Anchoring

2.2

This part of the handbook deals with anchoring the traditional-style pole tent to the ground.

A tent will not remain erect unless it is properly anchored to the ground on which it sits. Anchoring is typically accomplished by fastening guy ropes to the tent at the top of the side poles and to stakes which are driven into the ground at some distance outboard from the side poles. The adequacy of such anchoring is fundamental to the safe and proper function of a pole tent. For example, when a tent is subjected to the forces of wind, it takes on a new shape. This new shape significantly affects the forces which the anchors—or stakes—must resist in order to keep the tent from collapsing. A potentially unsafe situation can occur if the tent top displaces downward, trapping rain-water, which is known as "ponding." If left unaddressed, this can build up huge forces which may ultimately exceed the resisting capacity of the stakes.

SAFETY FACTORS

In order to account for the inevitable uncertainties which occur in the design, manufacture, installation, and use of structures of all kinds, safety factors must be employed. There is always at least a small chance that the loads imposed on a tent stake (or tent anchor in general) will exceed its ability to resist that load.

For example, if test data indicates that a stake has a 1000-pound capacity at a certain pull angle, and if the tent guy rope load has been determined to be 500 pounds acting at the same angle (and in the same kind of soil) then:

$$SF = \frac{1000\#}{500\#} = 2.0$$

In conventional building design the normal safety factor is approximately 1.7. For wind, approximately 1.3. For tents practice varies, but most industry groups feel that a safety factor of somewhere between 1.5 and 2.0 is appropriate for staking. This appears to be justifiable if the data which characterizes the capacity of the stake is representative of the soil on the site in question.

Manufacturers of anchors hasten to point out the need for establishing anchor capacity on the basis of test data which is representative of the specific installation site. For this reason, the installer would be well-advised to consider a higher safety factor on staking if he is suspicious of subsurface site properties.

 © 2004 IFAI Tent Rental Division

Stake failure can occur primarily in two ways:

- The first way to fail is in tension. Here the resisting frictional forces between the soil and the stake are insufficient to keep the stake from yielding to pull-out forces along its axis.

- The second most common way for a tent stake to fail results when the sideways force imposed by the stake against the surrounding soil is greater than the soil can push back; so the soil yields by bulging up above the surface. Consequently, the stake simply pushes the unconfined soil out of its path.

The most common tent stake, which is a slender cylindrical shaft of steel or wood, must be regularly, easily, and economically installed, removed, and reinstalled.

The ground conditions in which the tent stake must perform its function are not a constant. These variables will cause the same stakes on the same tent to perform differently depending upon the following:

1. Soil (geological—possibly) variations

2. Water table variations—month-to-month and seasonal

3. Surface and subsurface variations and man-made disturbances

4. Paved sites

By soil variations, we mean those site factors which arise out of the fact that a tent will usually be installed at many different sites. For example, tent stakes installed in clay will not perform in the same way when installed in sand. The water table is relatively close to the ground surface in many parts of the world. Where this is true, month-to-month and seasonal variations can mean the difference between staking a tent in soil that is saturated one day and dry the next.

When we refer to surface and subsurface variations and man-made disturbances, we are referring to alterations in the subsurface which would not be apparent to the tent installer when he inspects the site. For example, a site that had been used for dumping refuse or debris would have underlying soil of unknown (and probably non-uniform) properties.

Another example involves a site that has been altered by bringing in fill material to raise the surface. This kind of site is suspect because of the unknown quality of compaction which was accomplished when the fill material was added.

Many tent installations occur on asphalt-paved or compacted stone upper crusts. This kind of upper crust has a significant affect on the performance of the stake.

A SYSTEMATIC APPROACH TO STAKING

The objectives of this part of this chapter are to lay the groundwork for a systematic approach to staking the traditional pole tent. This involves, primarily, two general activities:

- The first activity focuses on developing a systematic approach to staking which necessitates a discussion of the general engineering principles at work in the performance of a tent stake.
- The second activity concerns the evolution of a method for obtaining, accumulating, correlating, and presenting data on stake performance. In time a large bank of data will be developed that will be reliable and, consequently, will take much of the guesswork out of the process.

By equipping the tent installer with these two types of technical information, tent staking safety should be enhanced.

Engineering principles

This section of the chapter presents a general explanation of some of the engineering principles which relate to establishing the best stake position for a tent.

The larger the stake diameter, the greater the holding power.

Logic would seem to dictate that the larger the stake diameter, the greater the holding capacity of the stake. See ***Figure 8***. The recent draft of the proposed European standard for marquee-style tents offers formulas for calculating the holding capacity of a straight steel stake. These formulas indicate that stake capacity is a direct function of stake diameter.

In the first place, a larger diameter stake will displace more earth as it is driven in than the smaller stake. See ***Figure 9***. This greater compaction should produce greater soil pressure against the side of the stake. This greater sideways pressure will increase the friction acting along the sides of the stake and provide more resistance to pullout due to stake tension. Since the sideways earth pressure on the stake is directly proportional to the surface area of the stake, and the surface area of the stake is directly proportional to the stake diameter, then it follows that there is more resistance to stake pullout due to tension in the larger diameter stake. Finally, when a stake pushes laterally against the earth due to sideways pull of the guy rope, a pressure results. With a larger diameter stake, there is less pressure on the soil wedge in front of the stake; therefore premature failure of the soil wedge is avoided.

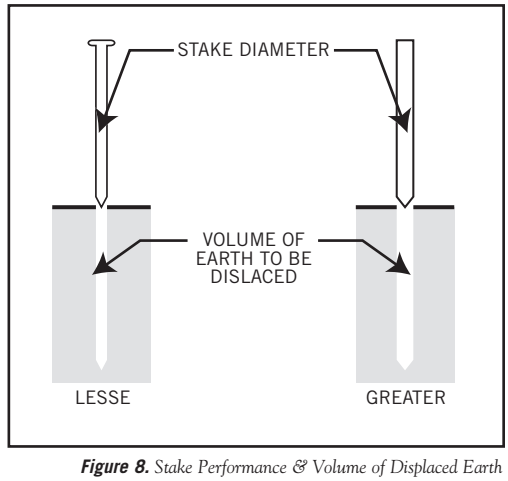

Figure 8. *Stake Performance & Volume of Displaced Earth*

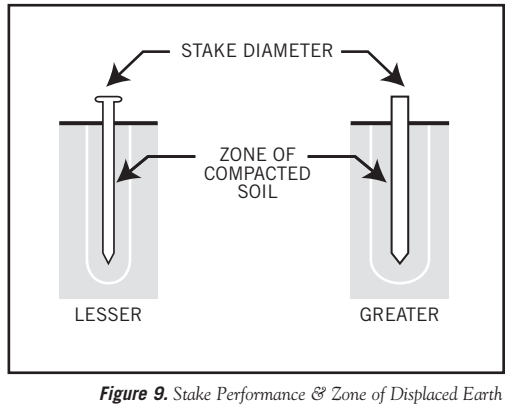

Figure 9. *Stake Performance & Zone of Displaced Earth*

The deeper the stake, the greater the holding power.

Stake pullout strength is directly related to stake depth. See ***Figures 10 and 11***. This is true for several good engineering reasons.

1. Greater surface area
2. Soil pressure usually increases with depth
3. Larger soil wedge

The holding capacity of a tent stake is due to a significant degree to friction developed between the stake and the soil which surrounds it. It follows that the deeper the embedment of the stake in the soil, the greater the surface area of the stake which is in contact with the soil; thus the greater the holding power. A deep-sea diver is subjected to greater water pressure the deeper he dives. Similarly, the earth builds up greater and greater pressures the deeper you go below the surface. Thus it is obvious that the deeper the tent stake, the more the earth presses up against the stake and produces greater frictional forces, which increase its holding power.

The sideways component of forces on the tent stake, which is produced because of the angle of the guy rope, is resisted by a wedge of earth in front of it. This wedge of earth is deeper the deeper the stake is driven. The larger the wedge, the more sideways resistance it exerts to keep the stake from failing by pulling over.

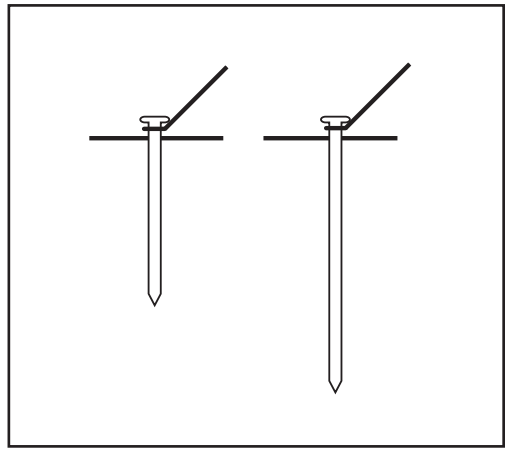

Figure 10. *Stake Holding Power and Stake Depth*

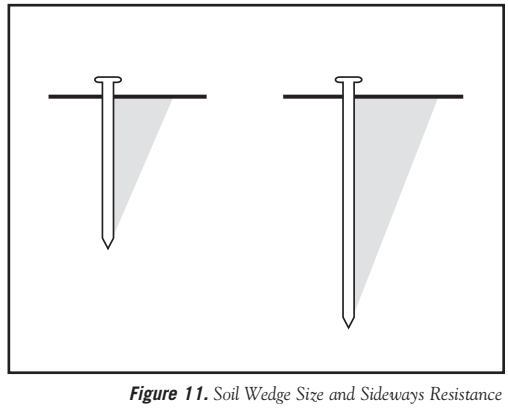

Figure 11. *Soil Wedge Size and Sideways Resistance*

The better the soil, the greater the holding power.

The best staking job in the world will be subject to variation in the soil in which the stakes are driven. Stakes perform differently depending upon whether they are driven into clay, sand, loam, etc. Most of the time, the soil is a mixture of the basic varieties: perhaps sandy clay, or clayey sand, for example.

Furthermore, soil classification may change among soil layers depending upon depth. It is not uncommon to discover that one corner of a tent may be located on one type of soil and another corner on an entirely different type of soil. ***Figure 12*** lists the basic soil types for engineering purposes and includes a brief description of how to identify them.

The wetter the soil, the lesser the holding power.

The effective holding power of all soils is compromised to some extent by moisture. Refer to the Staking Data Sheet (see ***Figure 23*** later in this chapter) and apply an appropriate safety factor to allow for this phenomena.

A proper driving angle yields greater holding power.

Field practice indicates that installing stakes vertically is superior to installation at an angle. This also simplifies installation and removal of the stake. See ***Figure 13***.

Sand, gravel. Coarse-grained, cohesionless soils (the particles have no natural affinity for each other). The material is not moldable. This soil drains quickly. Particles are generally larger than 0.05 inches.

Stiff clay. Fine-grained, cohesive soils (the soil particles tend to stick together). The material can be rolled into threads which have noticeable tensile strength. The material is moldable, but not by hand, and the material normally has to be removed from the site with a pick. In the wet state, it sticks to the hands. In the dry state it cannot be easily brushed from the hands. Clays do not tend to drain quickly; they retain water and are subject to shrink/swell. Particles are 0.0002mm or finer.

Soft clay. Same as stiff clay, except it can be molded by hand and excavated by shovel.

Organic silt. Medium-grained soils containing some amount of fine decomposed organic material. Particles range in size from 0.06 to 0.0002 mm. The material is very poor foundation material.

Inorganic silt. Approximately the same as organic silt, but contains only mineral grains, no organic material. Particles are fine, but not smaller than 0.0002 mm.

Hardpan. Any hard, cemented layer which does not soften when wet.

Loam. Made up of mixed soil types, usually containing organic materials, some sand, some clay, and some silt. Topsoil is usually classified as loam. Generally is poor foundation material.

Figure 12. *Basic Soil Classifications*

 © 2004 IFAI Tent Rental Division

Optimum guy rope angle provides optimum holding power.

A number of factors must be taken into account in the process of finding the right answer for any given situation. See ***Figure 14***. Significant factors include:

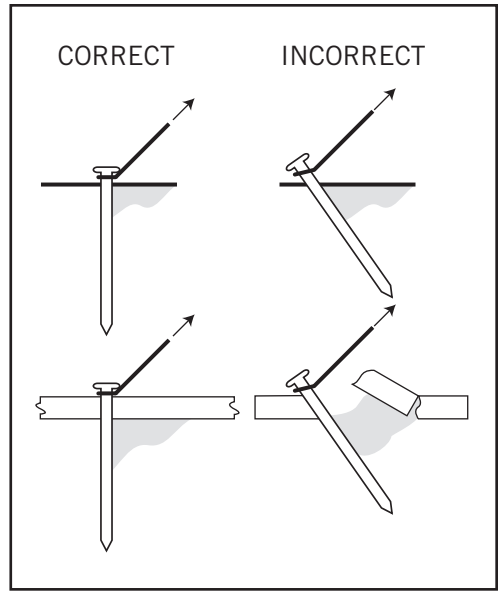

Figure 13. *Stake Driving Angle*

1. Tent geometry—unloaded

2. Tent geometry—wind factor
   Note: If there is wind and no sidewalls, guy rope angles should be steeper, i.e., the stake should be closer to the tent.

3. Tent geometry—ponding factor
   Note: If staking against downloads or ponding, guy rope angles may have to be shallower, i.e., the stake should be farther from the tent.

4. Presence or absence of sidewalls
   Note: If there is wind and, in addition, the tent is supplied with sidewalls, guy rope angles should be shallower, i.e., the stake should be farther from the tent.

5. Soil type

6. Ground moisture

7. Presence or absence of pavement

8. Need to keep side poles in compression
   Note: When staking against wind lift forces, the guy rope must be at an angle that will keep the side poles from jumping. Consequently, the stake should be located relatively closer to the tent. A pull angle of 45 degrees produces vertical forces on the stake which are equal to the lateral forces. At 45 degrees or slightly steeper, the traditional pole tent could reasonably be expected to withstand the forces of wind uplift while maintaining a balance between vertical and lateral stake forces. If alternate sidepole heights are used, that should be taken into account in maintaining proper guy rope angles.

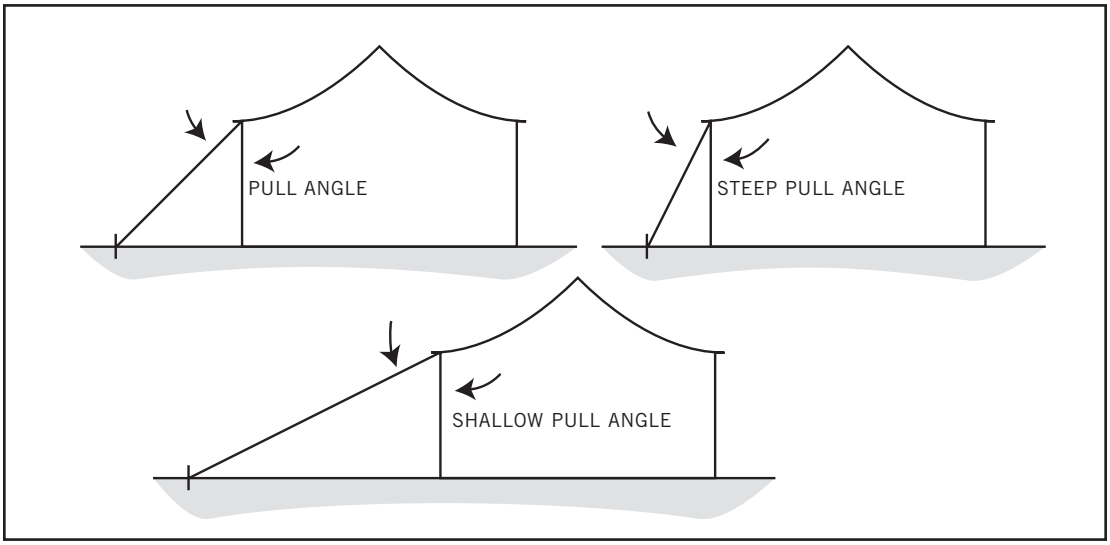

Figure 14. *Pull Angles and Stake Location*

Increasing the height of the stake knot above the ground decreases stake holding capacity.

The creeping force generated on the stake varies with the distance above the ground where the guy rope is secured to the stake. See ***Figure 15***. The greater this distance, the greater the creeping force on the stake. In order for the stake to be stable in the ground, the possibility of its creeping must be eliminated. The earth pushing against the side of the stake accomplishes this purpose. It is absolutely essential that the guy rope be kept as low as possible on the stake, not higher than two or three inches, to maintain maximum stake holding capacity.

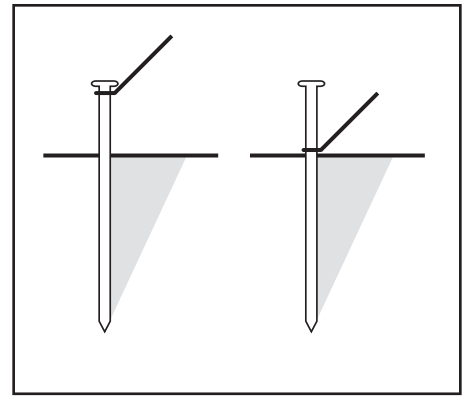

Figure 15. *Stake Knot Height*

Holding power varies with anchor types.

The basic straight shaft, steel "nail head" type of tent stake is the basis of most of the discussion in this chapter. Several other types are in common use throughout the industry. See ***Figure 16***. Aside from the simple straight shaft stakes, most others function on the general "deadman" principle of gathering a cone or similar block of heavy earth above the projecting element on the stake thereby impeding pull-out. These have the potential of generating much greater holding power.

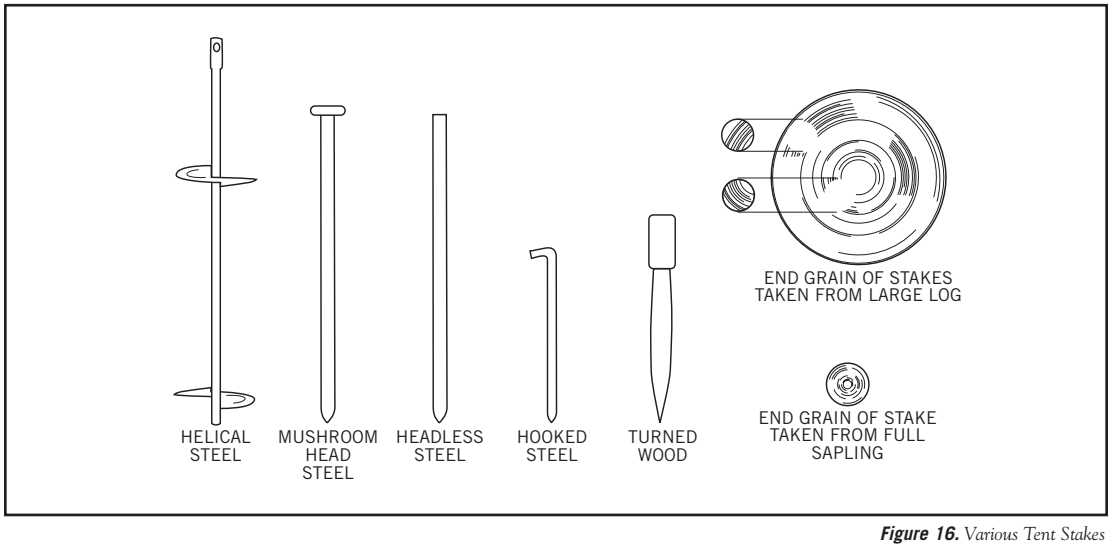

Figure 16. *Various Tent Stakes*

Alternate Staking Methods

Some popular methods may be employed generally for increasing staking capacity.

Double Staking

Double staking is the practice of driving another stake a short distance behind the primary stake and close-tying both stakes together with the free end of the guy rope. Triple and/or quadruple staking may also be used in applying the same concept.

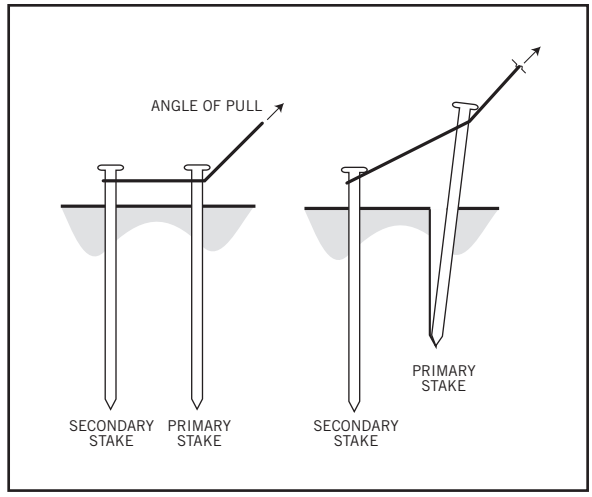

Figure 17. *Double Staking*

This would appear to be beneficial where there is a likelihood that the primary stake might not be sufficient by itself, or when the particular guy rope location is a critical link in the stability of the tent. In ***Figure 17***, the arrangement is shown where there are no significant loads on the primary stake, when no wind is blowing, for example. The stake in ***Figure 17*** is loaded to the point where it is on the verge of failing. But as it creeps forward, and at the same time rises as if to pull out, the close-tie to the secondary stake tightens. At this point, the secondary stake resists the tendency for the primary to move sideways or up.

Note the void which has developed behind the primary stake in ***Figure 18***, which depicts various staking errors. If the secondary stake is too close behind the primary stake, it will have only limited side-load resistance since the earth in front of it will collapse forward into the void. On the other hand, if the secondary stake is too far away from the primary stake, the close-tie will be fairly long and may actually allow the primary stake to pull free which is undesirable. See ***Figure 18***. A rule of thumb for double staking suggests that the distance between stakes be equal to one-third of the depth of the stake in the ground.

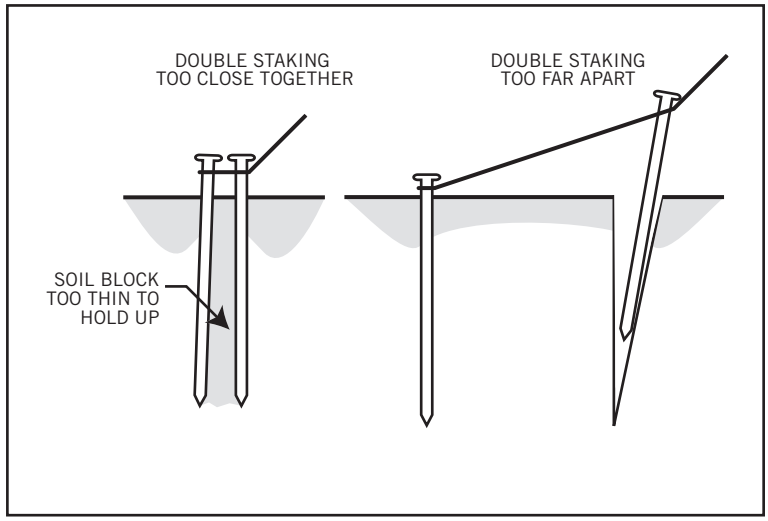

Figure 18. *Double Staking Errors*

Gang Staking

A staking technique related to double staking, in that it also increases staking capacity, is called gang staking. There are several different techniques.

One method involves the use of a rigid ground plate with holes punched in it for the stakes. This is schematically shown in ***Figure 19***. An advantage of this procedure is that the sideways pressure on the stakes does not push along the same line as the stake or stakes in front of it thereby taking advantage of virgin soil. If possible, the guy rope should pull from the center of the plate thus distributing the load approximately equally to each stake.

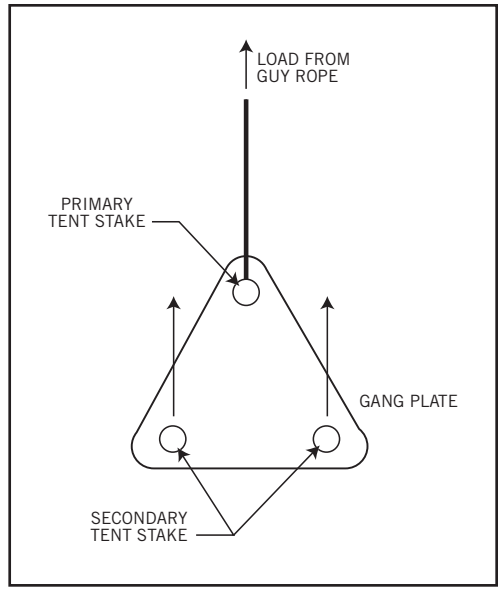

Figure 19. *Gang Staking*

Another technique, known as the Buckle's Frog's Foot, is shown in ***Figure 20***. It utilizes a yoke comprised of a rigid bar tied to the guy rope by several sub-ties and located behind the line of tent stakes bearing against them. The rigid bar has the effect of distributing the total tie-back load relatively evenly against the back side of the tent stakes. The rigid bar should be kept as small in diameter as feasible so as to maintain the location of the pressure against the backs of the stakes as low as possible above the ground.

Multiple staking methods will probably grow in popularity as designs meeting specific higher wind speed criteria are required.

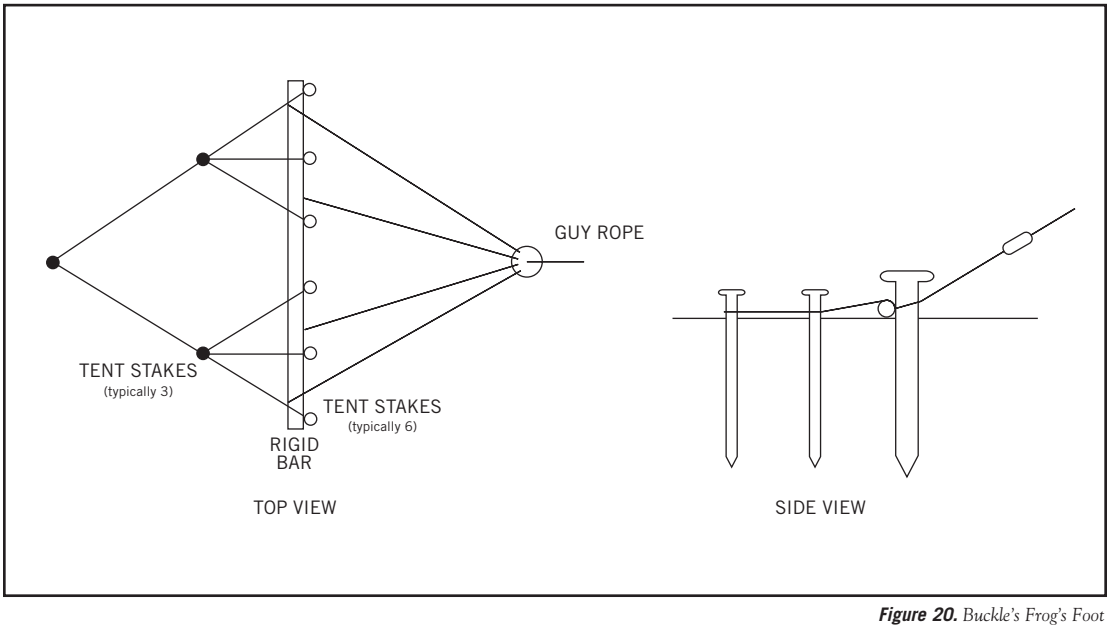

Figure 20. *Buckle's Frog's Foot*

FIELD TEST METHODS FOR ACCUMULATING TENT STAKING DATA

After all is said and done, good tent staking practice ultimately depends upon good information derived from field testing. Some would advocate that the capacity of a shallow earth anchor can be determined adequately only by subjecting the specific anchor to a test load. While this probably would be difficult to achieve as an industry practice, and impractical to expect, it does serve to point out that the capacity of shallow earth anchors, tent stakes included, is a function of many variables and not easily established by means other than those based on the results of field testing.

This section is dedicated to the implementation of a program to standardize the way in which industry-wide staking data are collected, accumulated and combined.

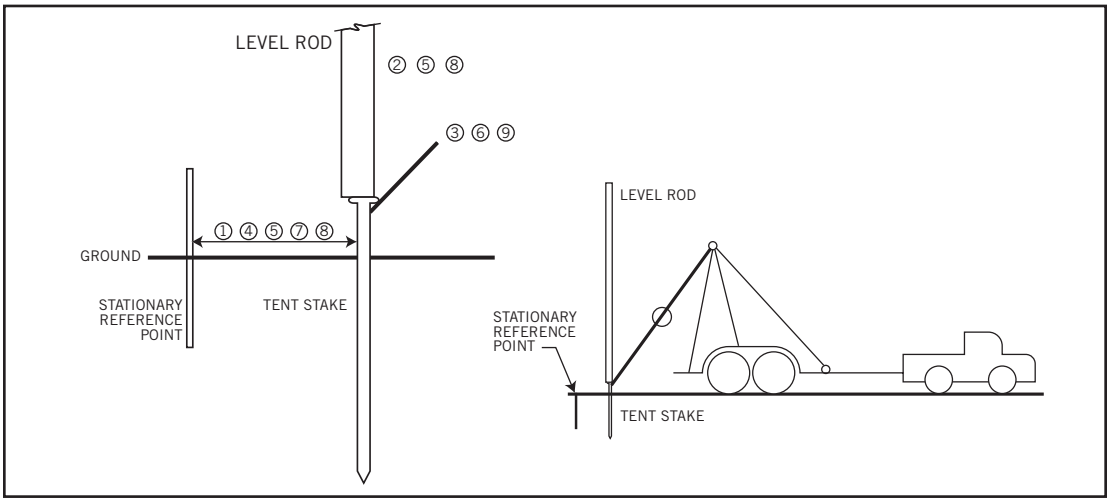

Figure 21. *Field Test Setup*

General Stake Test Procedure

1. Measure the distance horizontally from the stationary reference point to the center of the stake.
2. Take an initial reading with the level rod on top of the stake.
3. Apply 100 pounds of pull at the constant rate of _____ lb/min.
4. Immediately take a new horizontal reading from the stationary reference point to the center of the stake. Also take a vertical reading.
5. Hold the same 100 pounds pull on the stake for 3 minutes. Then measure the horizontal and vertical positions of the stake.
6. Apply an additional 100 pounds pull (200 pounds total pull), as in **3**.
7. Repeat **4**.
8. Repeat **5** (except now 200 pounds total pull).
9. Repeat **6** (now 300 pounds total pull).
10. Repeat sequence in 100-pound increments.

Stop when either:

(a) The amount of movement of the stake when holding the load for 3 minutes is the same or greater than previously, OR

(b) when the stake will take no additional load—it simply moves.

Figure 22. *General Stake Test Procedure*

One of the keys to the development of a bank of good, correlatable stake capacity information is uniformity and completeness in the recording of the data produced. ***Figure 21*** shows a test setup for collecting staking data. ***Figure 22*** describes the procedure for using the test setup (with corresponding numbers). ***Figure 23*** is a sample data sheet for recording the measurements made. ***Figure 24*** is a form for summarizing the field test.

The test setup used in the field should utilize a truck or trailer-mounted tripod with a pulley arrangement at the top of the tripod. The guy rope should pass over the tripod via the pulley and should be fed from an electric winch or hydraulic cylinder. A dynamometer should be inserted between the tripod and the stake or between the tripod and the winch to monitor load. The loading rate should be the same for all tests conducted. The dynamometer used must be properly calibrated.

Type	l	l_1	∡s	∡P	(Pu) Ult. # Pullout	(Ps)* Max Save Load
1" Ø Steel	42"	39"	90°	45°	1100°	550°

*Ps = Pu/2

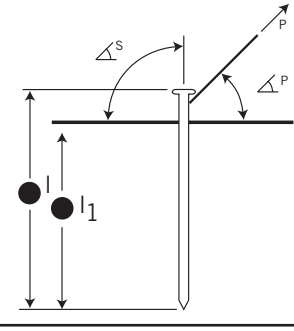

Figure 23. *Sample Staking Data Sheet*

The test form (***Figure 24***) includes the following sections:

Section 1. General information is requested and is self-explanatory.

Section 2. Stake Data requires the recording of parameters listed where projection is the distance from the ground to the top of the installed stake and the stake angle is the acute angle measured from the vertical.

Section 3. Guying data—the pull angle is the acute angle measured from the horizontal.

Section 4. The accumulation of ground data may often require that the testing crew rely on their best judgment as to soil type, moisture content, etc. A reasonable amount of research may be necessary, including a few telephone calls, to establish the identity of the soil type, for example.

Section 5. Initial measurements supply the information needed to establish the beginning point of the actual test by providing "zero" points for measuring vertical and horizontal movement.

Stake Test

1. General Information

Company _____ Time _____ Crew _____

Site Location _____ Date _____

Temp _____ Recorder _____

2. Stake Data

Type _____

Diameter _____(inches)

Length _____(inches)

Projection _____(inches)

Embedment _____(inches)

Material _____

Stake Angle _____(from vertical)

3. Guying Data

Pull Angle _____(degrees)

Pull Height _____(inches)

Rope Diameter _____

Rope Material _____

4. Ground Data

Soil Type _____

Moisture Level _____

Pavement? _____

Pavement Material _____

Pavement Thickness _____(inches)

Drainage _____

5. Initial Measurements

Horiz. distance from stationary ref. pt. to center of stake rod: _____ (inches)

Vertical reading on level rod w/level rod resting on top of stake: _____ (inches)

Load (lbs.)	Time to Load (min.)	Horizontal Movement (in.)	Vertical Movement (in.)	Horizontal Creep (in./3 min.)	Vertical Creep (in./3 min.)

Figure 24. *Sample Test Form*

 © 2004 IFAI Tent Rental Division

Figure 25 shows how the data which is logged on the bottom half of the sample test form is to be plotted on a stress-versus-strain graph.

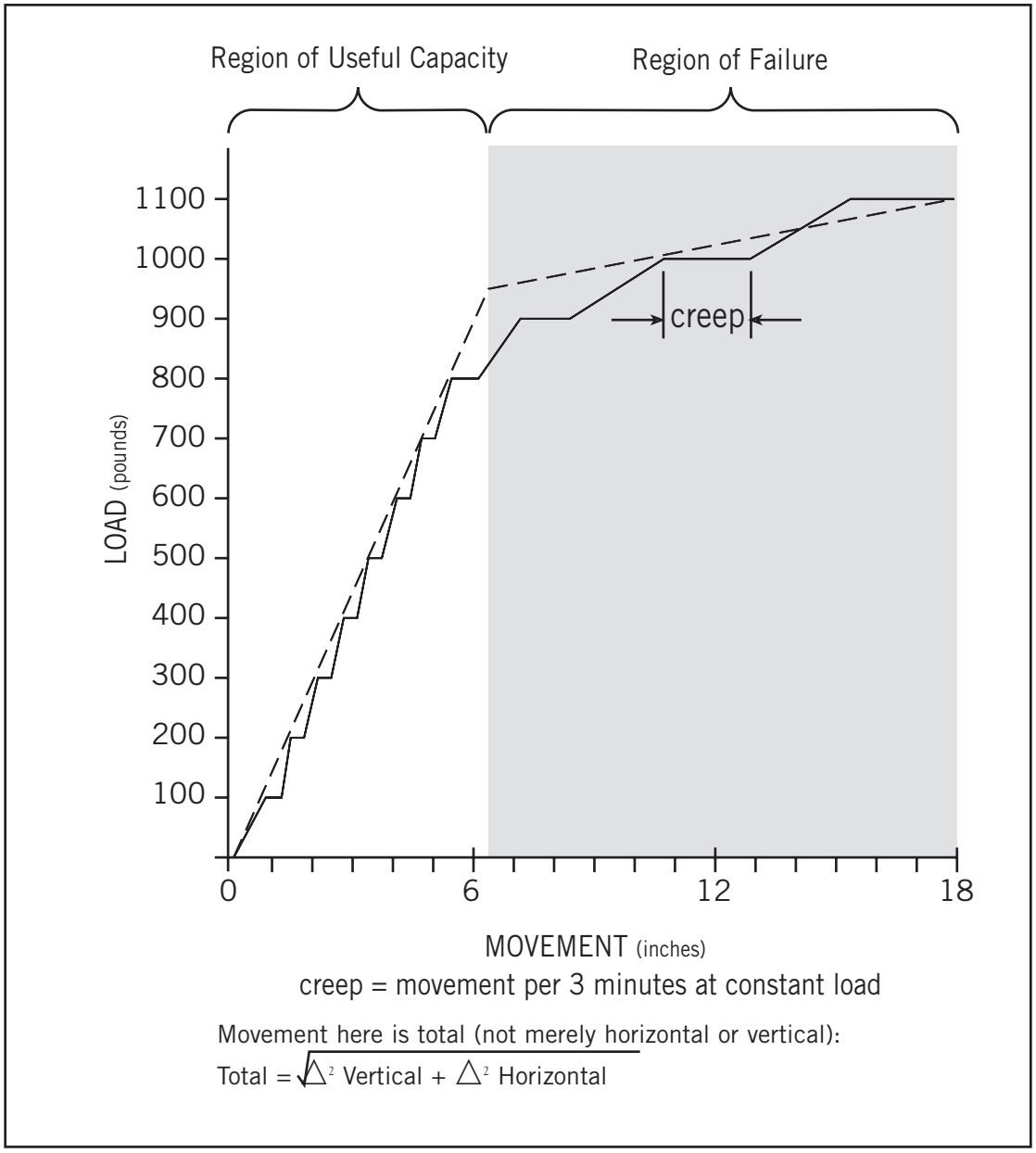

Figure 25. *Stress vs. Strain Graph for Stake Pull Test*

The manufacturer's instructions must be followed. Those instructions take precedence over any conflicting instructions that may be contained in this manual. In the event of a conflict, follow the manufacturer's instructions and warnings.

CHAPTER THREE: Poles

3

This chapter is intended to aid the installer in the safe installation of support poles. With the tent laid out and staked, the next step is to raise it by inserting the support poles and pushing them into a vertical position. By working with the outside poles first, then the interior poles, the top can be raised by lifting small increments of the total weight. As a result of following this procedure, the task is easier, and the number of assistants needed is reduced.

INSTALLATION

1. The first poles to be installed should be the side poles. When all the sides are up in the air, a good portion of the weight has been lifted, and easier access has been provided to the center of the tent. To install a side pole, loosely tie off the guy rope to the stake using the basic clove hitch. See ***Figure 26***. On corners and positions with double or triple ropes, tie them all. Then place the base of the side pole under the tent toward the center. When it is entirely underneath, push the side pole pin into the grommet where the guy rope is attached. At lace lines, ensure that the pin goes through grommets of both sections and that the grommets are in proper order, top and bottom. With the pole in place, lift to an almost vertical position with the base in toward the center of the tent and the top pin pointing up toward the exterior.

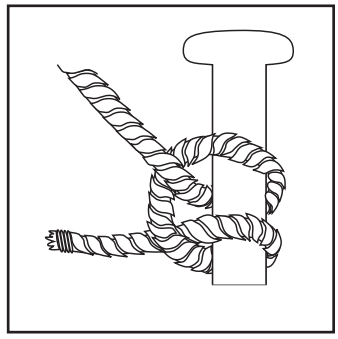

Figure 26. *Basic Clove Hitch*

2. At this point, tie off the small jump rope attached at the grommet/guy rope. See ***Figure 27***. This rope is used to keep the side pole in place in the wind so that the tent does not lift off the side pole pin allowing the side pole to fall over and the tent top to pond or collapse. Secure the jump rope by pulling it six to 12 inches down the pole, bringing it around the pole and then between the pole and the rope itself. Pull it back taut to create tension on the vertical length. Now wrap the rope around the pole and vertical portion of the jump rope creating a tight coil that keeps the rope from slipping up. On the last coil, pull the end of the rope through to tie it off.

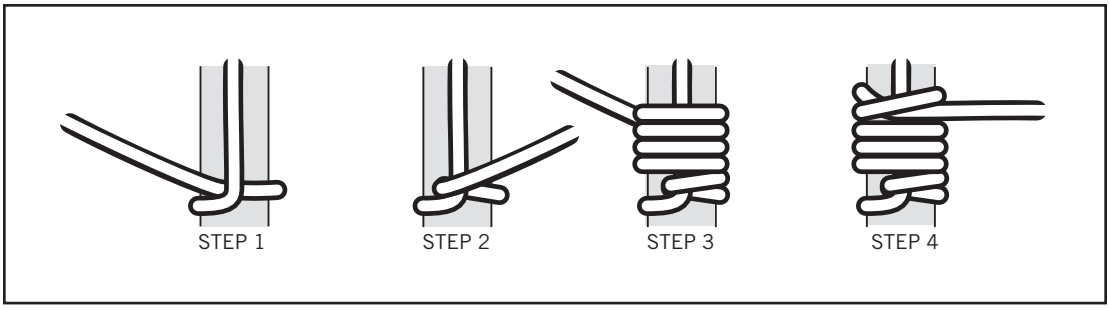

Figure 27. *Securing the Jump Rope*

 © 2004 IFAI Tent Rental Division

3. On square-end tents install the corner poles first. Make sure the guy ropes are taut enough to keep the pole from twisting and falling over. Starting on one side without doing the corners first would allow a whole line of standing side poles to "carousel" and collapse. On round-end tents, insert all the poles at the double rope positions first to ensure stability. After the corners (doubles) are erect, continue around the perimeter until all side poles are tied in and standing.

4. If the tent has quarter poles, now is the time to install them. Bring the poles into the tent so that the base is toward the center. Slide the quarter-pole pin into the grommet (both or all grommets at lace lines). It is imperative that the quarter poles be secured to the tent top to meet or exceed manufacturer's instructions. Then push the quarter pole to an almost vertical position.

5. The final phase of installing the poles is installation of the center poles. As before, it will be easier to lift if pushing from the center out rather than from the outside toward the center. Additionally, raising the center poles parallel to the center line of the tent will facilitate the lifting process. Once more, bring the poles in and put the bases toward the center. The center-pole pin must go through both grommets to give proper support to the tent. (Some firms use a short pipe with two flanges to hold the grommets together and facilitate entry of the center-pole pin.) It is imperative to secure the center poles to the tent top to meet or exceed manufacturer's instructions.

6. Then begin raising the center poles, referring to ***Figure 28***. Starting with center pole X, have the base toward Y and push toward X position. Next install and erect center pole Y pushing from Z toward Y. Finally, for center pole Z, push from the center from Y toward Z until the last pole is vertical. It may be easier to lift the first center pole part way and then go to the second pole. After raising the second center-pole completely, it will be easier to finish raising the first to its fully vertical position.

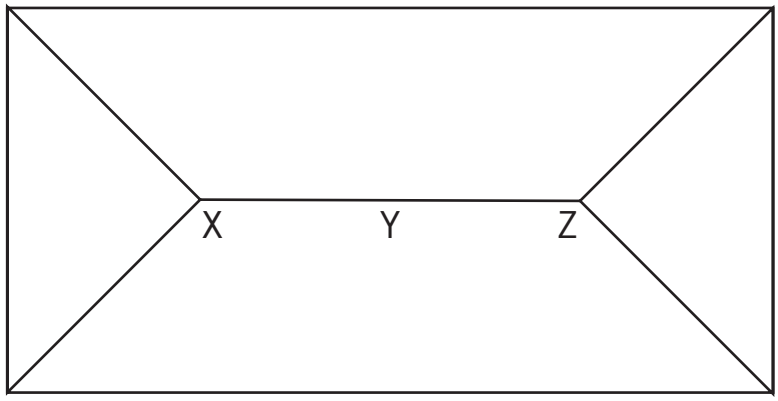

Figure 28. *Installing Center Poles*

7. With the center-poles upright, align the bases so they are in a straight line down the center line of the tent and in a line perpendicular to their side stakes. See ***Figure 29***. Once the bases are in the final position, you are ready to begin tensioning the tent.

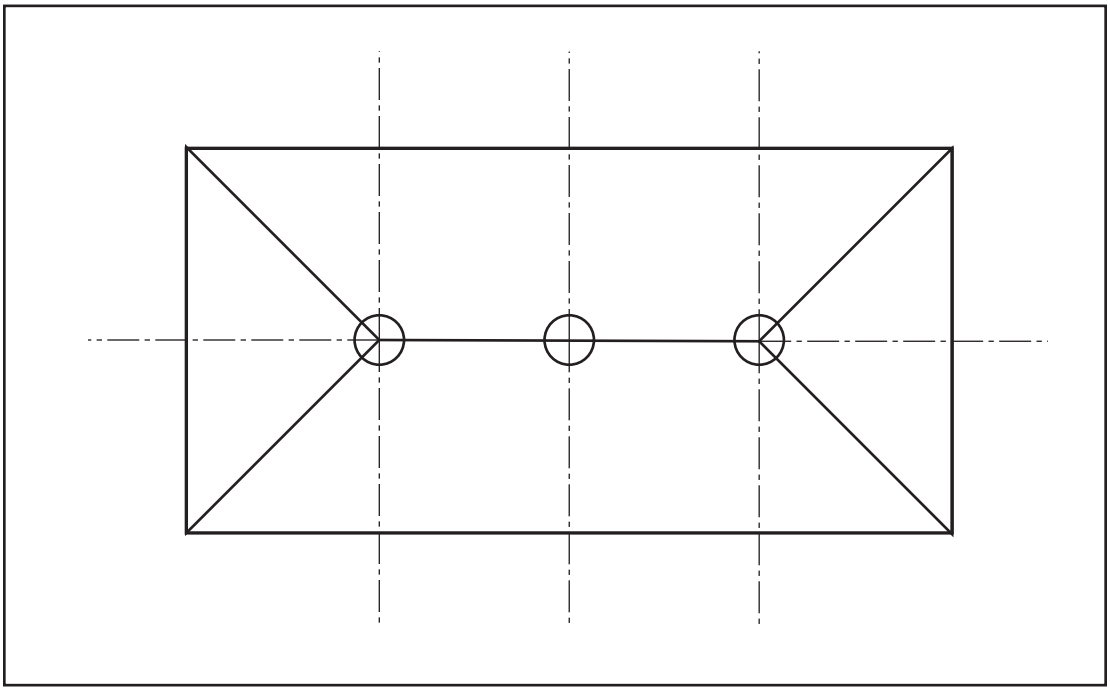

Figure 29. *Alignment of Center Poles*

SAFETY INSPECTION

A safety inspection is necessary at this time to ensure that all poles are secured properly. Additionally, it is essential to confirm proper pole dimensions and structural integrities per the tent manufacturer's specifications. Although the tent top has been raised, it is not suitable for occupancy by anyone other than the installers. It will not be designated as safe until the tent has been properly tensioned (see Chapter 4).

It should also be noted that it may be necessary to place some type of block, pad, or footing under the base of some or all of the poles. This will eliminate the problem of poles sinking into soft ground when tension is applied.

Please note that the manufacturer's instructions must be followed. Those instructions take precedence over any conflicting instructions that may be contained in this manual. In the event of a conflict, follow the manufacturer's instructions and warnings.

 © 2004 IFAI Tent Rental Division

CHAPTER FOUR: Tensioning

4

The objective of Chapter 4 is to provide a guide that will be generally useful throughout the tent industry. It is important that members of the industry understand not only the procedure, but also the reasoning behind it. There will be some discussion of knots to be used in fastening the tent to the stakes, as well as some types of rope used in the tent industry. The information on tensioning a tent comes from a sampling of all tent rental companies who belonged to IFAI.

Definition: Tension

1. Mental or nervous strain, often accompanied by muscular tautness

2. From the Latin *tendere*—to stretch
   a. Stress on a material produced by the pull of forces tending to cause extension
   b. A force or combination of forces exerting such a pull against the resistance of the material

The first definition might be the form of tension most people are familiar with. However, this chapter will attempt to reduce that type of tension by explaining how to properly tension a tent. Proper tensioning leads to a neater, safer installation but only works well in conjunction with the information provided in the other chapters of this manual.

This chapter addresses mainly the procedures involved in tensioning a traditional, pole-supported, 40-foot by 60-foot tent. The manufacturer's instructions should be followed in all cases and should supercede any information provided by this chapter. In order to have a neat, wrinkle-free, safe pole tent, it is necessary to place the fabric or skin of the tent under tension. This will enable the tent to perform to its traditional characteristics. A properly tensioned structure lets rainwater run off at an equal and constant rate and allows wind loads to distribute themselves over the entire structure.

By tightening ropes through the use of manpower or mechanical device, a tent is placed under tension.

TENSIONING A SQUARE-END TENT

The procedure most commonly used in a 40-foot-wide pole tent is as follows:

1. After raising the tent on poles as outlined in the previous chapter, having placed the center pole bases on predetermined marks and leaving the side-pole bases at a slight angle (less than 15 degrees) toward the center of the tent, now choose a corner that you designate as corner "one" (1). See ***Figure 30***.

2. Starting at the rope that will pull the longest eave first (Rope A of ***Figure 30***) making use of as many installers as necessary to achieve the desired results, with each person holding the rope (with knees slightly bent) begin pulling the slack in the tent at an angle downward toward the stake. Finish pulling when the side-pole grommet is in a vertical line with a position on the ground that was previously chosen. Tie a knot as needed.

 © 2004 IFAI Tent Rental Division

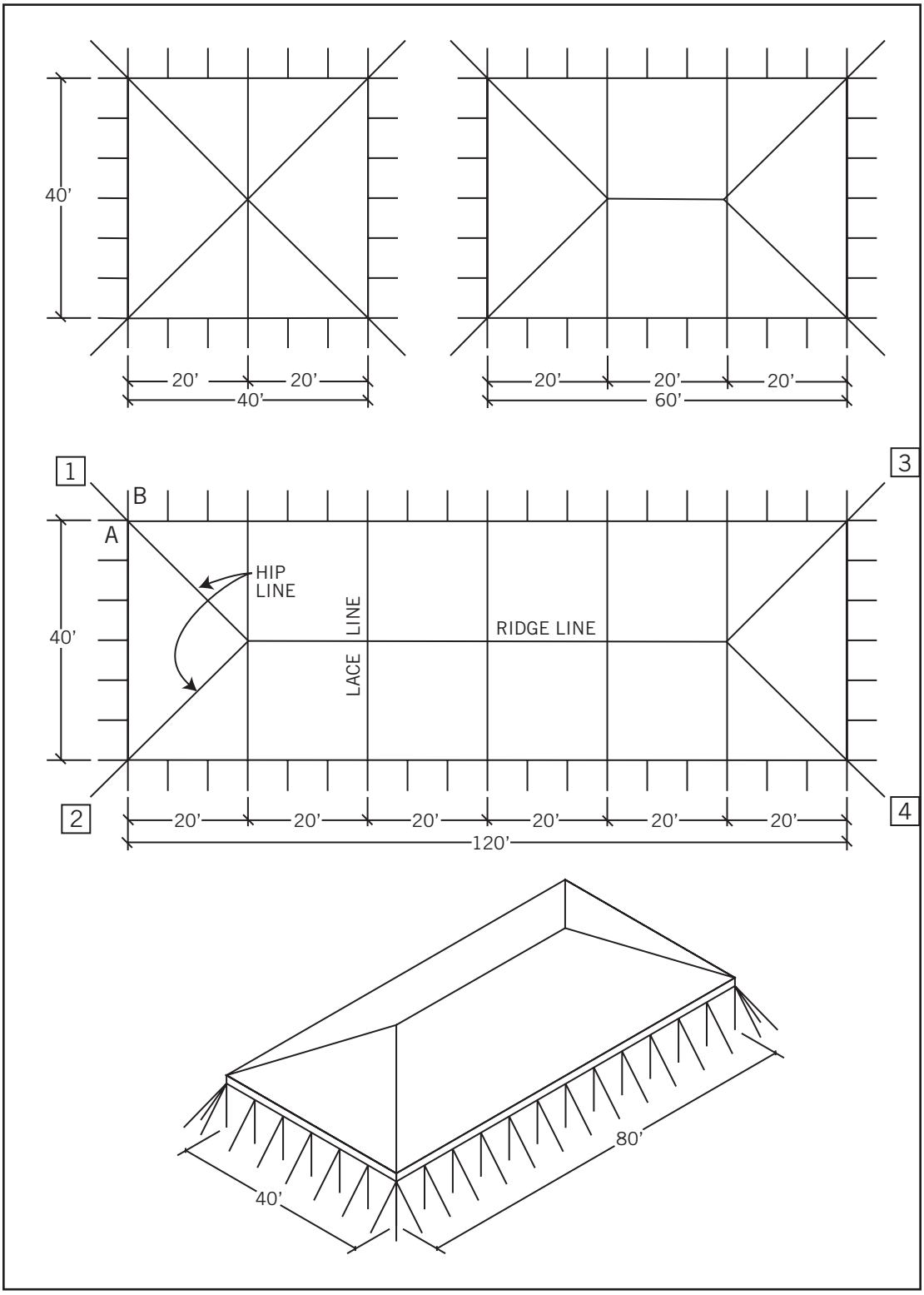

Figure 30. *Tensioning a 40' x 80' Square-End Tent*

3. Proceed to the second rope on the corner (Rope B of ***Figure 30***) that stretches the shorter of the two eaves. Apply tension to this rope in the same fashion, stopping when the grommet is in the chosen position. At this point, if the corner of the tent is where you want it to be, straighten the side pole. Proceed along the short eave to corner "two" (2) and follow the same procedure.

4. Proceed diagonally across the tent to corner "three" (3) and follow the same procedure.

5. Proceed across the tent to corner "four" (4) and finish the last corner. At this point, the tent should be squared and the eave lines taut. The hip lines should also be taut and the lacing lines and ridge line ropes in line with their respective stakes.

6. The next step will be to proceed to a lace line. The determination of which to tension first is based on the position of the top of the center poles. The base of the center poles should still be placed on a mark determined beforehand. The tops of the poles will be leaning in any direction. Following the same procedure as originally described, apply tension to the rope that will pull the top of a center pole in the direction that will allow it to rest in an almost completely vertical axis.

7. Proceed to each lace line in the order needed to straighten center poles. Then tension opposite sides. Tension alternately until the center poles are vertical.

8. Tensioning the ridge lines comes next on the agenda and will complete the job of pulling the center pole tops into the desired position.

9. Finish the tent by returning to corner one. Using only two people, proceed in one direction only along the outside of the tent, applying enough tension to the intermediate guy lines to give the tent a smooth, wrinkle-free finish. Straighten each side pole to a vertical position immediately after tension is applied to the rope.

In a 60-foot-wide pole tent (see ***Figure 31***), the bases of the quarter poles (already installed) should be located far enough in toward the center of the tent to remove them from supporting any weight. Check this; then begin tensioning the tent following the previously outlined procedure.

After the tent is completely tensioned, the quarter poles should be placed in the desired alignment—either completely vertical or at an angle to the ground. It is extremely important that the quarter poles be staked down using staking devices that meet or exceed the manufacturer's specifications.

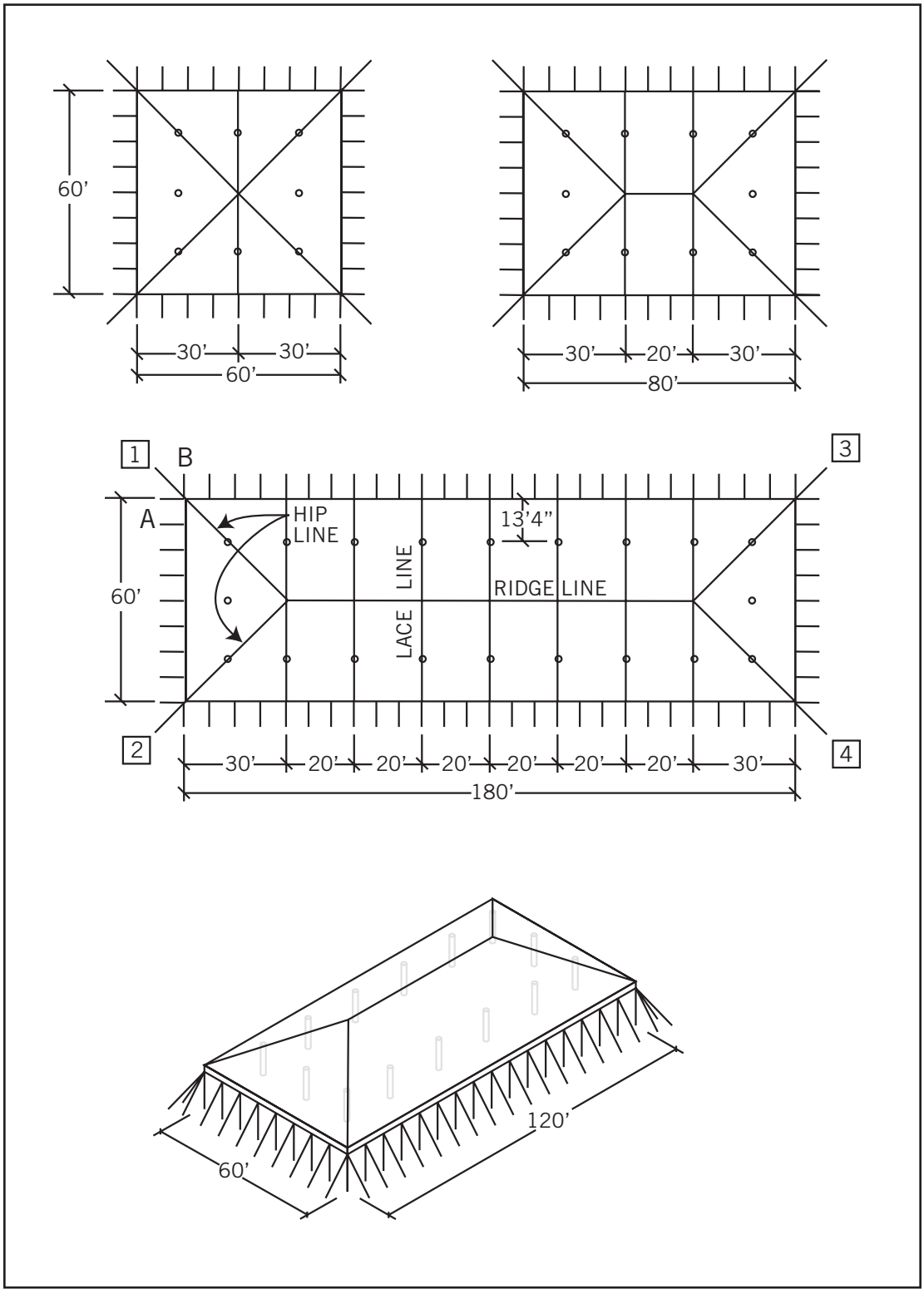

Figure 31. *Tensioning a 60' x 120' Square-End Tent*

TENSIONING A ROUND-END TENT

When tensioning a 40-foot or 60-foot oval tent, the procedure is slightly different. Check the placement of the stakes before proceeding—refer to Chapter 2.1.

1. Begin at a lacing band by applying force to the rope, pulling the center pole vertical and the side-pole grommet to a designated position.

2. Proceed to the opposite side lacing band and tension.

3. Proceed to the next lacing band that will pull the next center pole to a vertical position and tension.

4. Proceed to the opposite side and tension.

5. This will provide squared-off center sections to start with. Now, based on the direction pole tops are leaning, consider which end would be better to tension in order to pull the poles to a vertical position. Proceed to that end.

6. Tension the rope next to the center line of the tent (see Rope A, ***Figure 32 or 33***).

7. Tension the rope on the opposite side of the center (see Rope B, ***Figure 32 or 33***).

8. Then proceed back and forth away from the center line of the tent until the lacing bands are reached.

At this point, one end of the tent should be stretched and tensioned to manufacturer's specifications. Proceed to the opposite end of the tent and follow the same procedure until the job is complete.

REPEATED TENSIONING

In addition to all of the above procedures, it may be necessary to tension the ropes more than once. If the tent eaves have loosened (allowing dips to form) or if any previously tensioned ropes are not tight, repeat the tensioning procedure as needed. Each rope should be inspected for proper knots and tautness. This is also a good opportunity to check the quality of the ropes and their splice connections to the tent. This is part of a vigilant maintenance program for safe tents.

On tents that are to be in place over a long period of time, the tension should be checked every three to seven days as appropriate. With either method, the manufacturer's instructions must be followed. Those instructions take precedence over any conflicting instructions that may be contained in this manual. In the event of a conflict, follow the manufacturer's instruction and warnings.

 © 2004 IFAI Tent Rental Division

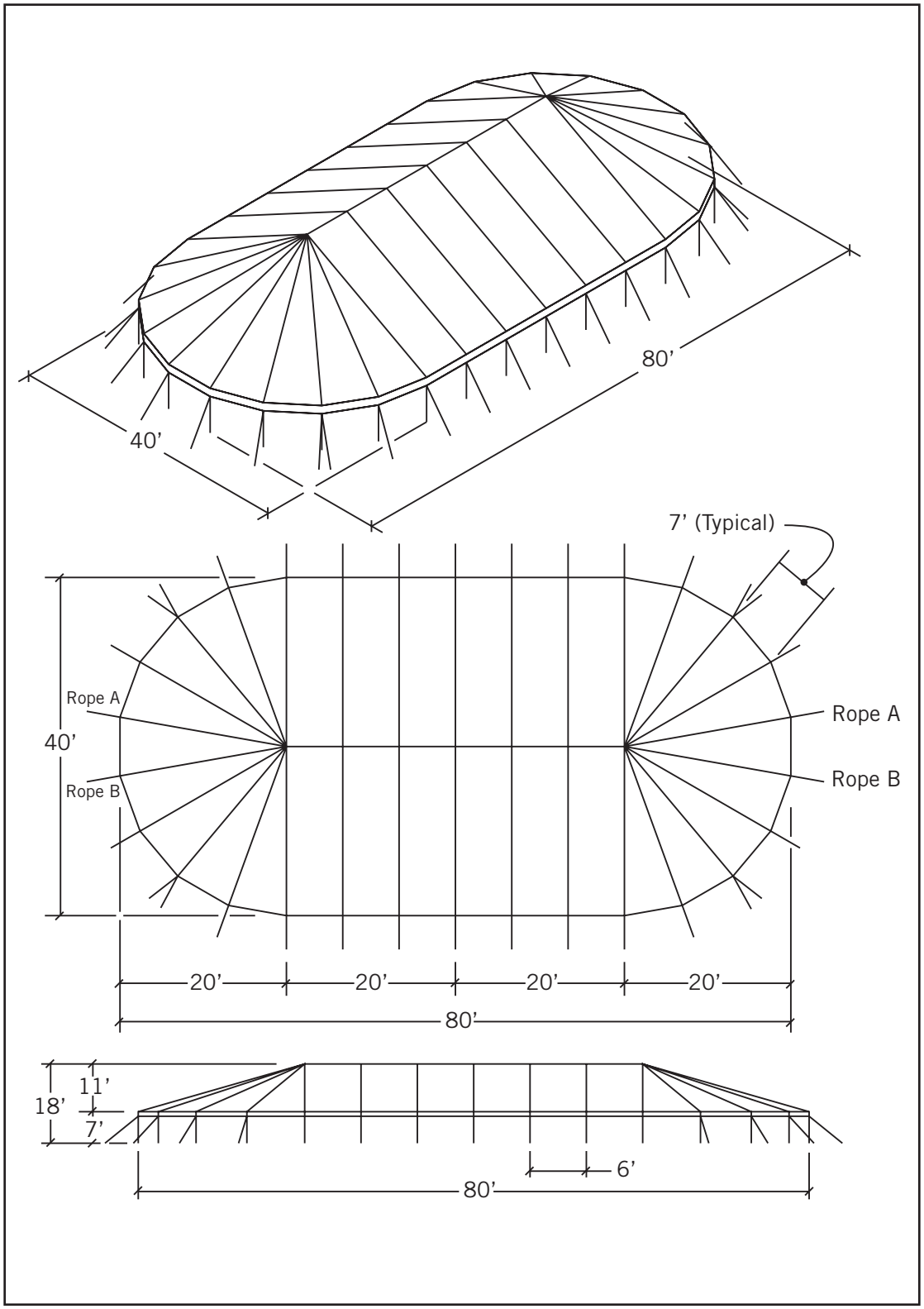

Figure 32. *Tensioning a 40’ x 80’ Round-End Tent*

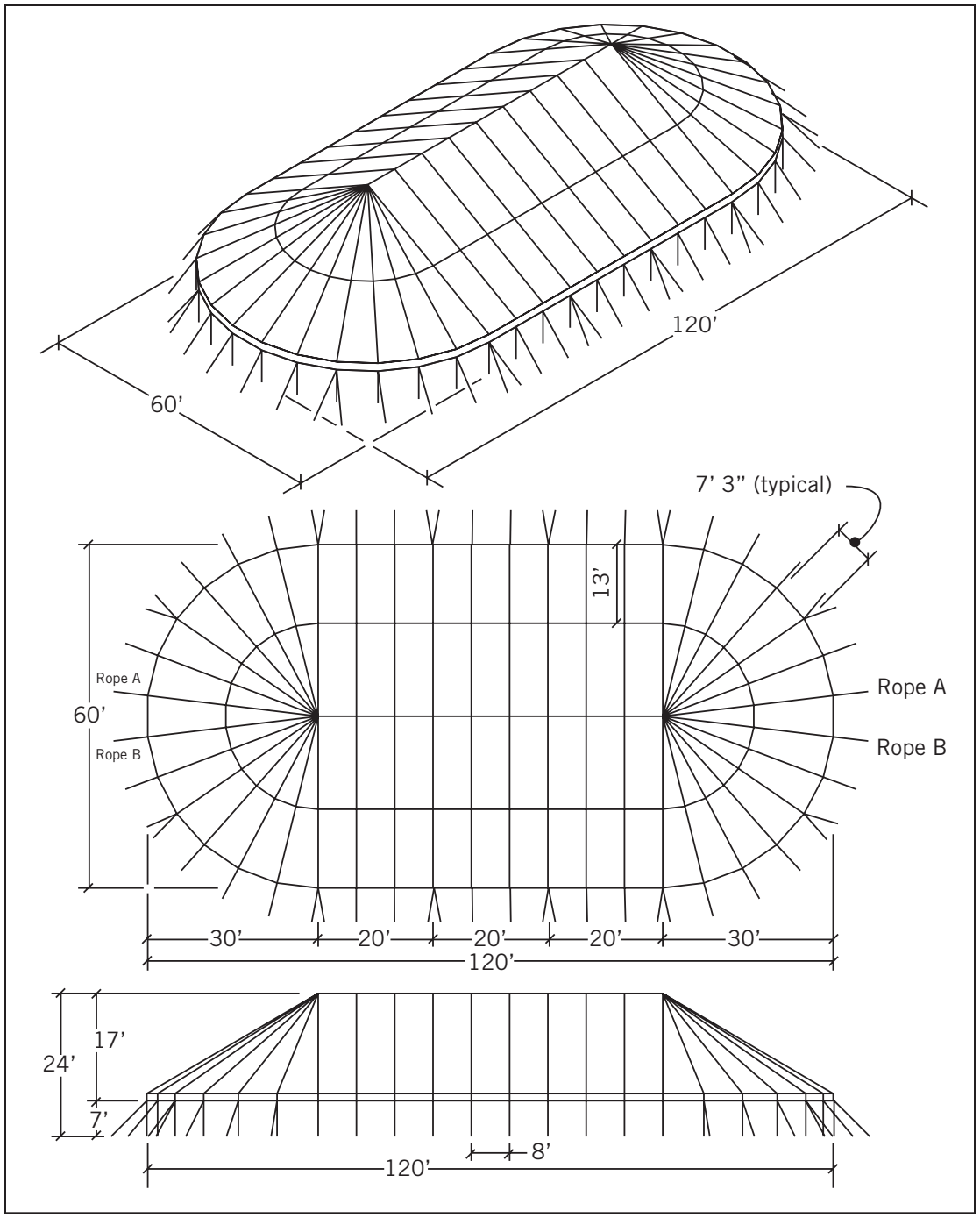

Figure 33. *Tensioning a 60' x 120' Round-End Tent*

ROPE

Maintaining the tension placed on a tent top is very dependent on the type of rope used. See ***Figure 34***. Rope was probably first made around 3000 B.C. using natural fibers. Early natural fiber ropes consisted of hemp or manila, or sisal.

The natural fiber ropes used since then and up to the creation of synthetic ropes are still in use in the industry today. Synthetic ropes were developed during World War II and continue to evolve. All synthetics have a greater resistance to abrasion and are stronger than natural fiber ropes. Their resistance to water absorption also allows them to be stored wet.

Dia.	Cir.	Manila			Sisal		
		Pounds per 100 Feet	Feet per Pound	Tensile Strength Pounds per Square Inch	Pounds per 100 Feet	Feet per Pound	Tensile Strength Pounds per Square Inch
3/16"	5/8"	1.5	66.6	406	1.5	66.6	325
1/4"	3/4"	2.0	50.0	540	2.0	50.0	430
5/16"	1"	2.9	34.5	900	2.9	34.5	720
3/8"	1 1/8"	4.1	24.4	1220	4.1	24.4	970
7/16"	1 1/4"	5.3	19.0	1580	5.3	19.0	1280
1/2"	1 1/2"	7.5	13.3	2380	7.5	13.3	1900
9/16"	1 3/4"	10.4	9.61	3105	10.4	9.61	2485
5/8"	2"	13.3	7.25	3960	13.3	7.25	3180
3/4"	2 1/4"	16.7	6.00	4860	16.7	6.00	3800
13/16"	2 1/2"	19.5	5.13	5850	19.5	5.13	4680
7/8"	2 3/4"	22.5	4.45	6950	22.5	4.45	5545
1"	3"	27.0	3.71	8100	27.0	3.71	6480
1 1/8"	3 1/2"	36.0	2.78	9450	36.0	2.78	7580
1 1/4"	3 3/4"	41.8	2.40	10800	41.8	2.40	8640
1 5/16"	4"	48.0	2.09	12150	48.0	2.09	9720
1 1/2"	4 1/2"	60.0	1.67	13500	60.0	1.67	10800
1 5/8"	5"	74.4	1.34	16850	74.4	1.34	13320
1 3/4"	5 1/2"	89.5	1.12	20250	89.5	1.12	16200
2"	6"	108.0	0.93	23850	108.0	0.93	19080
2 1/8"	6 1/2"	125.0	0.80	27900	125.0	0.80	22320
2 1/4"	7"	146.0	0.685	36900	146.0	0.685	29520
2 5/8"	8"	191.0	0.524	46800	191.0	0.524	37440

Tensile strength and pounds per 100 feet are average. All lengths, strengths and weights are approximate.

Recommended Working Loads:
Manila 20%. Nylon and polyester 10%. Polypropylene 15%.

New rope tensile strengths are based on tests of new and unused rope of standard construction in accordance with Cordage Institute standard test methods. All figures are "average." The minimum is 10% below stated amount. Safe working load is indicated by recommended working load ranges.

Use of working loads—Because of the wide range of rope use, rope condition, exposure to the several factors affecting rope behavior, and the degree of risk to life and property involved, it is impossible to make blanket recommendations as to working loads. However, to provide guidelines, working loads are tabulated for rope in good condition with appropriate splices, in non-critical applications and under normal service conditions. Working load ranges should be exceeded only with expert knowledge of conditions and professional estimates of risks.

The recommended working load ranges are derived by taking 15 to 25% of new rope tensile strength for braided rope and 10 to 20% for twisted rope.

The lower limit of the working load range should be used where life or limb is involved. The upper limit should be used where property only is involved.

Figure 34a. *Cordage Specifications* *(continued on next page)*

Dia.	Cir.	Nylon			Polyester			Polypropylene		
		Pounds per 100 Feet	Feet per Pound	Tensile Strength	Pounds per 100 Feet	Feet per Pound	Tensile Strength	Pounds per 100 Feet	Feet per Pound	Tensile Strength
3/16"	5/8"	1.0	100.0	900	1.2	83.4	950	0.70	143	720
1/4"	3/4"	1.5	66.7	1490	2.0	50.0	1490	1.2	83.4	1130
5/16"	1"	2.5	40.0	2300	3.1	32.2	2300	1.8	55.6	1710
3/8"	1 1/8"	3.5	28.5	3340	4.5	22.2	3340	2.8	35.7	2110
7/16"	1 1/4"	5.0	20.0	4500	6.2	16.1	4500	3.8	26.3	3160
1/2"	1 1/2"	6.5	15.4	5750	8.0	12.5	5750	4.7	21.3	3780
9/16"	1 3/4"	8.3	12.3	7600	10.2	9.8	7600	6.1	16.4	4590
5/8"	2"	10.5	9.5	9350	13.0	7.7	9350	7.5	13.3	5600
3/4"	2 1/4"	14.5	6.9	12800	17.5	5.7	12500	10.7	9.3	7850
13/16"	2 1/2"	17.0	5.9	15300	21.0	4.76	15300	12.7	7.87	8910
7/8"	2 3/4"	20.0	5.0	18000	25.0	4.0	18000	15.0	6.7	10400
1"	3"	26.0	3.8	22600	30.5	3.3	22000	18.0	5.5	12600
1 1/8"	3 1/2"	34.0	2.9	29800	40.0	2.5	29500	23.7	4.2	16500
1 1/4"	3 3/4"	40.0	2.5	33800	46.3	2.2	33200	27.0	3.7	18900
1 5/16"	4"	45.0	2.2	38800	52.5	1.9	37600	30.5	3.3	21200
1 1/2"	4 1/2"	55.0	1.8	47800	66.8	1.5	46800	38.5	2.6	26800
1 5/8"	5"	68.0	1.5	60000	82.0	1.2	57000	47.5	2.1	32400
1 3/4"	5 1/2"	83.0	1.2	72000	98.0	1.02	67800	57.0	1.7	38800
2"	6"	95.0	1.05	90000	118.0	0.85	80000	69.0	1.4	46800
2 1/8"	6 1/2"	109	0.92	100000	135.0	0.74	92000	80.0	1.2	60390
2 1/4"	7"	129	0.77	125000	157.0	0.64	107000	92.0	1.1	68310
2 5/8"	8"	168	0.59	162000	205.0	0.49	137000	120.0	0.83	89100

Figure 34b. *Cordage Specifications (continued)*

Nylon is the best known fiber, but it is also the material with the greatest stretch. Therefore, it is not reliable in situations where something has to be pulled tight and remain tight.

Polyethylene and polypropylene are two synthetic rope fibers that are now widely used. Their strength is at least twice as great as that of natural fiber ropes. Polypropylene is the lighter of the two and it has the additional advantage of floating on water.

Synthetic ropes are slippery and will stretch when placed under tension. Therefore, an extra turn or two should be used when securing the rope.

KNOTS

Knots are fastenings made by intertwining or tying together pieces of string, cord, or rope. They also have the property of fastening closely as well as intricately.

Few things are easier to do than tie a knot in a piece of rope. It seems, however, that there are people who can't tie a knot and others who can tie knots that will never come undone. One of the first things taught in this industry is how to tie knots. It is possible to be teaching how to tie a knot properly yet be using the wrong knot. Knots that will hold in some applications will slip in others. It is usually too late to change when discovered and is potentially unsafe.

The three most commonly used knots are all hitches. See ***Figure 35***. A hitch is used primarily for attaching a rope to an object such as a post or stake. The most common:

- A clove hitch and a clove hitch with a second loop (also known as a rolling hitch). The rolling hitch is meant to take a strain at an angle to a post and in this way is more secure than a clove hitch.
- Two half hitches are a quick way to tie to a post temporarily.
- A midshipman's hitch, so-called because it was used originally on sailing vessels.

Knot selection is based on the following factors:

1. Type of staking or hold-down device.
2. Type of rope used.
3. A knot that will least likely damage the rope.
4. Most important—Manufacturer's recommendations should be followed in the choice of knots.

After the completion of a safety inspection (see Chapter 6) and compliance with all local codes, the tent may be occupied.

The manufacturer's instructions must be followed. Those instructions take precedence over any conflicting instructions that may be contained in this manual. In the event of a conflict, follow the manufacturer's instructions and warnings.

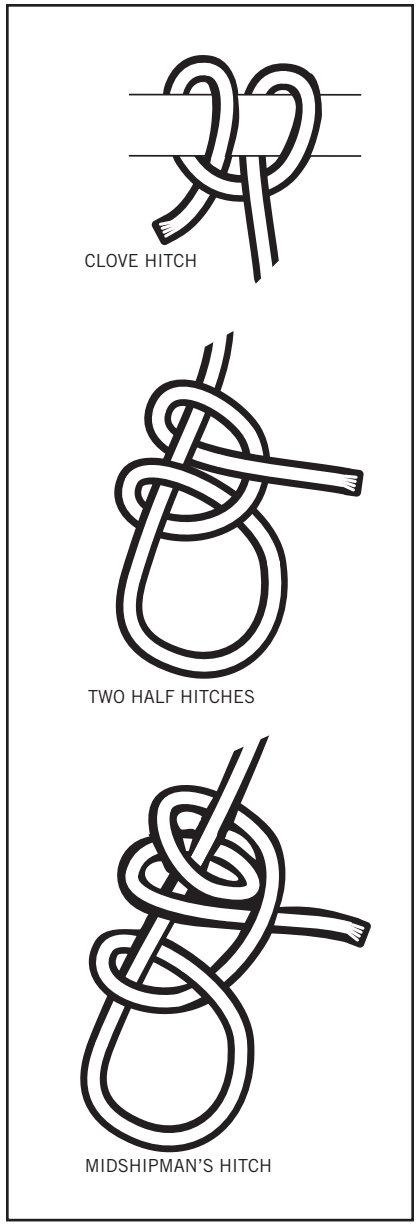

Figure 35. *Most Commonly Used Knots*

CHAPTER FIVE: Sidewalls

5

Sidewalls are one of the more basic items of a pole tent. They are, in essence, tarps modified or customized to attach to a tent to act as walls. These provide the tent and its users some weather protection, privacy, and, in some cases, limited security. Along with these benefits, the use of sidewalls can create safety issues which must be understood and addressed by the rentor and end user of the tent. The use of sidewalls also impacts the way a tent reacts to wind. This chapter will describe different types of sidewalls, anchoring methods commonly used, and will offer general principles of safety and wind effects when sidewalls are installed onto a tent.

Sidewalls are tarps or fabric sections manufactured to attach to a tent to act as the exterior wall of the tent. The method of connection includes a spring clip or hook attached to the top hem of the wall panel, which attaches to the wall rope built inside the eave of the tent at the top of the valance. The valance of the tent then serves as a weather seal over this connection point between the tent top and the sidewall.

The side hems of the sidewall sections are often finished with a fixture to connect the panels together, be it grommets and cord, clips and rings, hook and loop, zippers, or some other connecter. The bottom hem is often grommeted to make tie-down points for the sidewalls when the walls need to be anchored in place.

TYPES OF SIDEWALL MATERIALS

Sidewall materials can be grouped into three different types: opaque, clear, and mesh, with each type having their own purpose. These are made into sections usually having the same height as the side-poles and as long as the user wants them to be. Regardless of the fabric being used, the sidewall materials should comply with the applicable fire codes.

Opaque

Opaque fabric walls are made with white or alternating stripes of materials, often the same fabric as the tent top, whether it be vinyl laminates, cotton or polyester canvas, or a cotton/poly blend fabric. These are the most common sidewalls in use today because of their durability and versatility. Solid colors, primarily white, have replaced most of the striped sidewalls as rentors need sidewalls that can be used with a variety of colored tent tops.

Clear

Transparent clear-vinyl sidewalls offer the user weather protection as well as visibility outside the tent. They are made from non-reinforced vinyl film and are more prone to cold cracking and scratching than the woven or laminated materials, which have reinforcing. Because they are commonly used for formal or social events, the consistent need for newer clear sidewalls increases, further shortening the life of an already fragile item. The "French window/cathedral" sidewalls are one item which adds some durability to a clear vinyl sidewall as it adds the aesthetic appeal of clear vinyl windows to the durability of solid sidewalls.

Mesh

The same base scrim used in the manufacture of vinyl laminates can be vinyl coated into a screen material and used for mesh sidewalls. These allow breezes through, control entrance and egress of people, but do not offer total weather protection or a visual block.

 © 2004 IFAI Tent Rental Division

INSTALLATION OF SIDEWALLS

Just as sidewalls are one of the more basic components of a pole tent, installation of sidewalls can be seen as a rather basic task. The attachment of the wall panel to the tent is simply the placement of hooks over a cord.

As has been previously mentioned, sidewall sections are specifically designed to hang from the eave of the tent to be the exterior wall of the tent. The top hem of the sections are usually finished with hooks or clips which attach to a cord built into the inside of the eave. Hanging the sidewalls on the outside of the sidepoles will keep the wind from blowing the walls inside the tent. The wall sections should be hung in a uniform, consistent manner and should not be bunched or stretched around the outside of the tent, nor should they be attached to the side poles as this could displace the side poles when the wind blows. As sidewall sections are added to the tent, they must be given adequate overlap with one another, so they can be properly connected together.

Anchoring Sidewalls

In some situations, it is desirable or necessary to anchor the sidewalls to keep them from moving or being moved. This is most common on longer-term installations or when the tent is being air conditioned or heated. Anchoring the sidewall complicates the project by restricting entry and egress from the tent. When this is done, proper exits must be provided in accordance with the locally accepted code or ordinance. Both the installer and the end user of the tent need to be familiar with the emergency exit requirements of the safety and fire codes in their area.

The sidewall anchoring methods mentioned in this chapter are the most common methods currently in use in North America. They are not listed in any specific order, nor is the list exhaustive as each is the result of an ongoing creative process. The effectiveness of any one of these methods is solely dependent on the skill of the installer and the materials chosen for the task.

- **Staking**
  Driving a small stake at the bottom edge of the sidewall is probably the simplest way to create an anchor point for a sidewall. The stake must be of adequate holding strength to not be pulled out and become a potential hazard when attached to the blowing sidewall.

- **Weight**
  Weight anchoring of sidewalls is very similar to the staking method. Rather than using a stake, use a weighted piece as the anchor point. The weight will need to have enough bulk and weight to keep it from being moved when the wind blows.

- **Cabling**
  The cabling method is accomplished by laying and tensioning a small cable along the base of the sidewalls, on the outside of the side poles. The sidewalls can then be attached to the cable to anchor them down against the wind. This method is workable only after the required number of exits have been located, as placing an exit over an existing cable would be hazardous.

- **Baseboard**
  The baseboard method uses rigid material that can be staked to the ground around the perimeter of the tent, which can also serve as an anchor point for the base of the sidewall. As with other methods, the installer and end user of the tent must be familiar with, and in compliance with, the correct number and size of exits from the tent, as stated in the accepted safety and fire codes for their area, or as approved by the local inspector.

 © 2004 IFAI Tent Rental Division

SIDEWALL SAFETY CONSIDERATIONS

If the tent has been enclosed with sidewalls, regardless if they have been anchored down or not, there are certain concerns which must be mentioned. Although the points are specific, they must be addressed in principle because of the variables which exist with each installation.

Exits

The greatest complication of enclosing a tent with sidewalls is that hanging sidewalls creates a space with limited access and egress. Safety and fire codes state the number and width of exits required to meet the needs for differently sized gatherings. The number of exits will increase as the size of the tent increases. It is common for the code to offer a formula to calculate the amount of exit footage required around the perimeter of the tent, based on the occupancy load for the tent. It will also list a minimum number of exits which the tent can have. The code may also list a maximum distance between exits, or the maximum distance to an exit from any point in the tent. As with any document, codes are subject to change, or they may be superceded by a local ordinance, and one may find that interpretation and enforcement differs from one community to another.

Wind

The way that wind impacts a tent changes if the sidewalls are added. Sidewalls that are securely anchored tend to have a wind deflecting effect on a tent. That is to say, they slow the speed of the wind through the tent and tend to deflect it either around the sides or over the tent top. A simplified interpretation of the IFAI Wind Tunnel data suggests that sidewalls deflecting the wind increase the uplift on the down-wind side of the tent, the side away from the wind. This situation is more severe when the wind is blowing across the ridge of a tent rather than down the ridge and the uplift on the perimeter is greater at the middle of the tent than at the corners. All this translates to an increased load put onto the ground anchors of the tent. This increased load may or may not be significant, but it is relevant in that it is yet another factor in understanding those things which have an impact on an installed tent.

Please note that the manufacturer's instructions must be followed. Those instructions take precedence over any conflicting instructions that may be contained in this manual. In the event of a conflict, follow the manufacturer's instructions and warnings.

 © 2004 IFAI Tent Rental Division

CHAPTER SIX: Safety and Maintenance

6

Under most weather conditions, a properly installed tent should remain safe until removal. However, certain external influences can alter the stability of an installation. Precautions should be taken to ensure the safety of the tent and of those using it.

The principal causes of tent failure can be natural or man-made. Weather or vandalism, for example, can jeopardize the security of an installation. Therefore, proper maintenance is required.

A tent is a temporary structure and the responsibility for its security should rest on the customer as well as on the business which leases the tent to the customer (hereafter "the rentor"). The customer should be made aware of this and should be instructed to notify the rentor of any apparent changes in the tent's structural condition. The correction of any problems should be left to the rentor.

The customer should be informed that the guy lines and stakes are there for a reason and should not be moved. A non-professional should not at any time try to adjust or untie any part of the tent. Natural occurrences, such as wind, rain, or snow, could affect tent stability due to changes in ground conditions or undue stress on the tent itself. Therefore, appropriate periodic inspections of a tent installation should be made.

Because some small problems can potentially become hazardous they should be corrected in a timely manner.

WEATHER EFFECTS

A tent rentor should be aware of the local weather and the effect it might have on the tent. The following natural occurrences should always be considered.

Wind
Wind can cause the tension of the tent to change by loosening ropes, pulling stakes, and/or causing poles to shift.

Rain
Water collection on a tent, sometimes referred to "ponding," can put undue stress on a tent. It can cause the tent to sag with the result that more water collects. Rain can also affect the surface condition. Highly saturated ground is less likely to hold a stake than dry ground.

Snow
Traditional pole supported tents are not designed to carry any type of snow load. Proper precautions should be taken so that no snow load develops.

 © 2004 IFAI Tent Rental Division

INSPECTION HIGHLIGHTS

When inspecting an installation, particular areas of concern include:

1. Staking—Be sure all stakes are secure.
2. Tensioning—Be sure all guylines are properly tensioned and all tent material set for proper drainage.
3. Poles—Determine that all poles are properly positioned, tied securely, and are structurally sound as needed.
4. Sidewalls—Be sure they are properly secured as needed.
5. Safety—All safety and maintenance issues should be addressed in a timely manner.

SPECIAL NOTES

A tent is not designed to carry the same wind and snow loads as a building; all parties must be aware of the tent's limitations. A tent renter must retain the right to declare the tent unsafe for occupancy.

The manufacturer's instructions must be followed. Those instructions take precedence over any conflicting instructions that may be contained in this handbook. In the event of a conflict, follow the manufacturer's instructions and warnings.

 © 2004 IFAI Tent Rental Division

TENT

RENTAL DIVISION

OF THE INDUSTRIAL FABRICS ASSOCIATION INTERNATIONAL

THE IFAI PROCEDURAL HANDBOOK FOR THE SAFE INSTALLATION AND MAINTENANCE OF TENTAGE

Part Two

Bail-Ring Tents Through 100-Foot Widths

An IFAI DIVISION

CHAPTER ONE: Site Survey

1

This section of the IFAI handbook is part of a set of procedures used to install and maintain tents. It is imperative that the reader thoroughly understand the principles of installing and maintaining pole-supported tents before attempting to install a bail-ring tent. The two are closely related and such basics as site survey, tent staking and anchoring, tent sidewalls, and tent safety and maintenance are an integral part of this section. Safety should always be the first consideration; to safely handle a large bail-ring tent, the installer needs to have extensive experience and/or an understanding of the principles of pole-supported tentage.

The tent installation and maintenance prodecures described in this handbook are presumed to occur on a level, open, and unobstructed surface. Although it may be possible to assemble and install a tent at a site that is not level, open or unobstructed, the procedures to do so may be different than those presented here.

The procedures for performing a site survey for bail-ring tents are essentially the same as those for a pole-supported tent. Please refer to the site survey instructions given in Part I, Chapter 1 of this handbook.

 © 2004 IFAI Tent Rental Division

CHAPTER TWO: Layout and Staking

2

The purpose of this chapter is to aid the tent installer in the safe layout and staking of a bail-ring tent. For bail-ring tents, the pre-staking method of layout is recommended because of the importance of positioning the center-pole bases in exactly the correct location and because of the size of most bail-ring tents.

LAYOUT PROCEDURE

There are generally two preferred systems to accomplish this step. The first is to determine the center line of the tent and work off the center pole positions to determine the corners. The second is to locate the corner pole positions and to use them to determine where the center poles need to be. In both cases it is crucial to carefully determine the center pole and corner pole base positions to allow the tent to go up easily and to be pulled out square. Round-end tents require use of the first method, finding the center line and center pole positions and then determining the side pole positions at the lace lines. After this has been accomplished, follow the rest of the instructions in Part One, Chapter 2.1, regarding round-end tents and the information presented below.

CENTER LINE METHOD

First, determine the center line of the tent. Then, measure to determine the actual location of the bases of the center poles (see ***Figure 36***). Once a straight line has been established, mark the center pole locations A, B and C, etc., so they are centered exactly at the sectional lace lines. If the center poles are too far apart, the bail-rings will not pull up easily or to their full extent. If the center poles are too close together, the ridge line will not pull out and the tent will not have the correct pitch to facilitate drainage and maintain structural integrity.

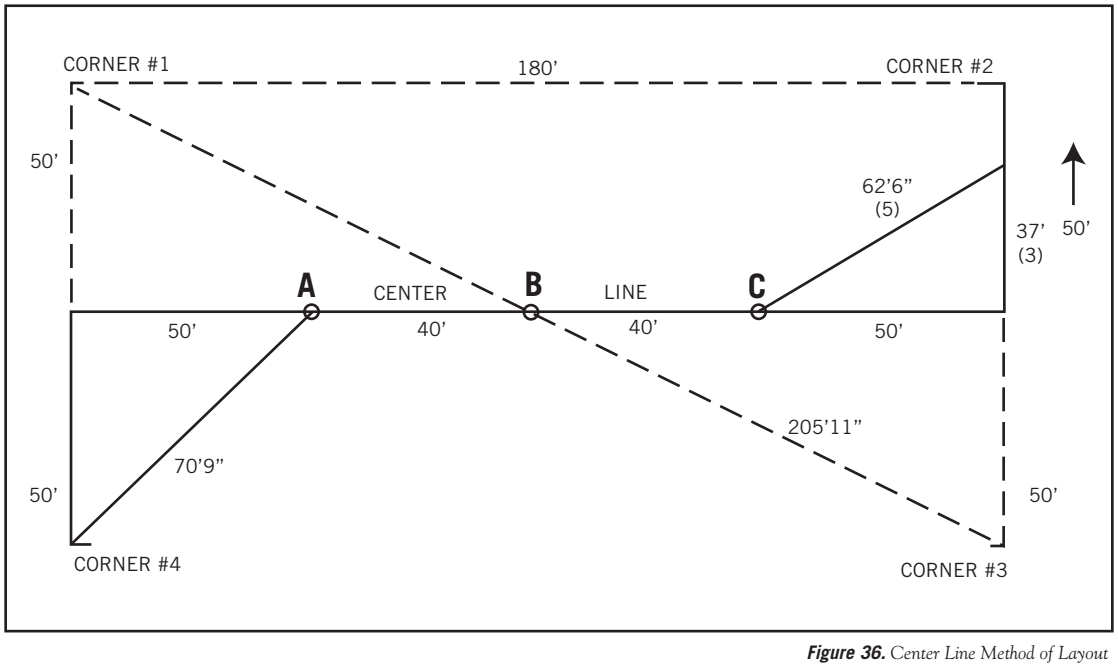

Figure 36. *Center Line Method of Layout*
100' x 180' square-end bail-ring tent

 © 2004 IFAI Tent Rental Division

Now, at each end of the tent, measure out to establish the perimeter of the tent itself. From these points, find the four corners of the tent by using the diagonal measurement or the 3-4-5 method (as shown in Part I, Chapter 2. 1, ***Figures 6 and 7a***). Once the four corners are established, it is recommended that they be double-checked by measuring the distance between corner poles 1 and 3 and between corner poles 2 and 4. The perimeter of the tent is now established.

PERIMETER METHOD

Determine a starting corner pole base point and then another corner pole location to determine a side. From these points, using either the diagonal or 3-4-5 method, locate the 3rd and 4th corner pole base positions (see ***Figure 37***). Again, verify accuracy by measuring the diagonals. Once all the corners have been determined, measure to the center points of the two end sides and run a tape measure down the centerline. Measure out the center pole base points along this line and mark them.

Once the perimeter and the center-pole points of the tent have been established, part of the crew can start driving the stakes as specified by the manufacturer. It is crucial that the installer be completely familiar with Part 1, Chapter 2.2, Tent Staking and Anchoring, to safely erect a tent of this type and size.

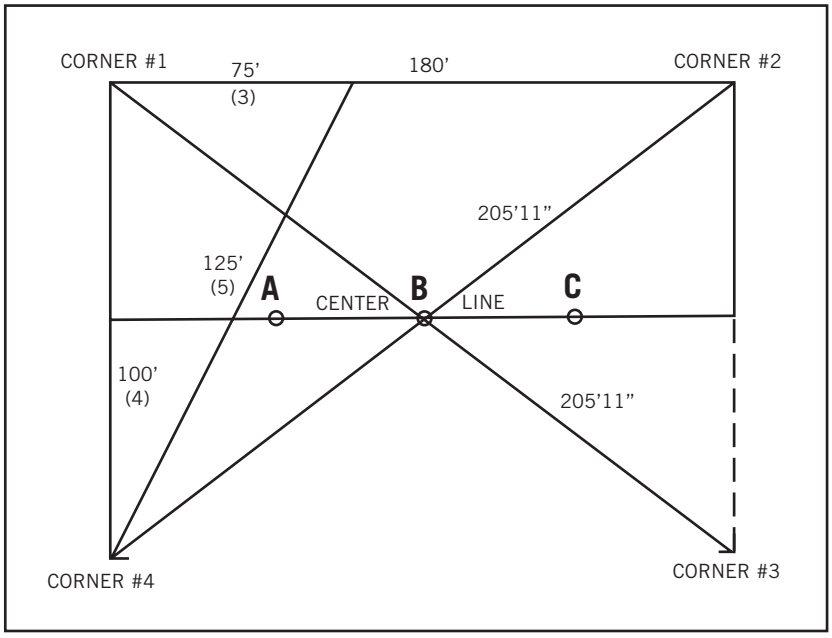

Figure 37. *Perimeter Method of Layout with 3-4-5 Triangle*
100' x 180' square-end bail-ring tent

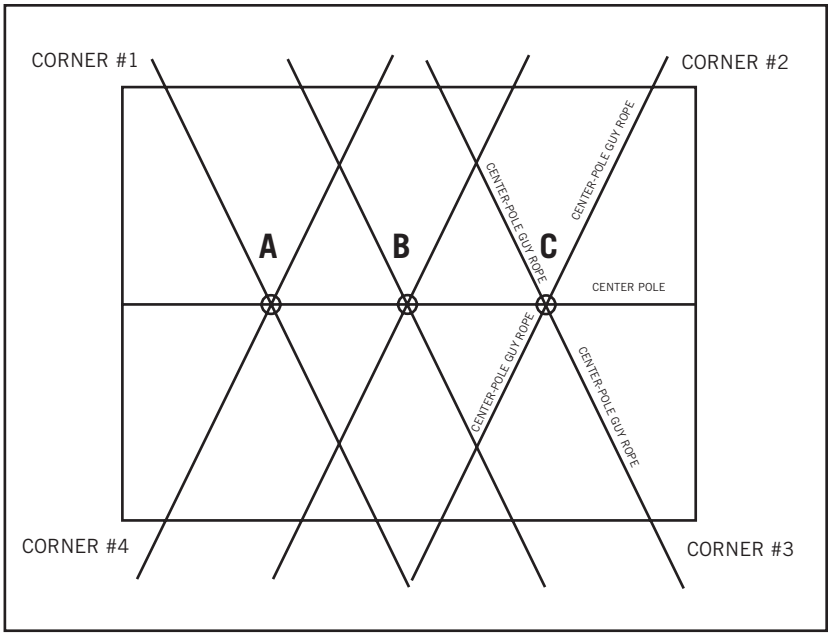

Figure 38. *Staking Pattern for Center-Pole Guy Ropes*

In addition to the regular stakes for the tent, it is necessary to drive stakes for the center pole guy ropes. These stakes traditionally are placed to give support in all four directions and are far enough outside the perimeter stakes that, when the poles are vertical, the center-pole guy ropes are not laying on the tent top (see ***Figures 38 and 39***). The rest of the crew will start to assemble the center poles.

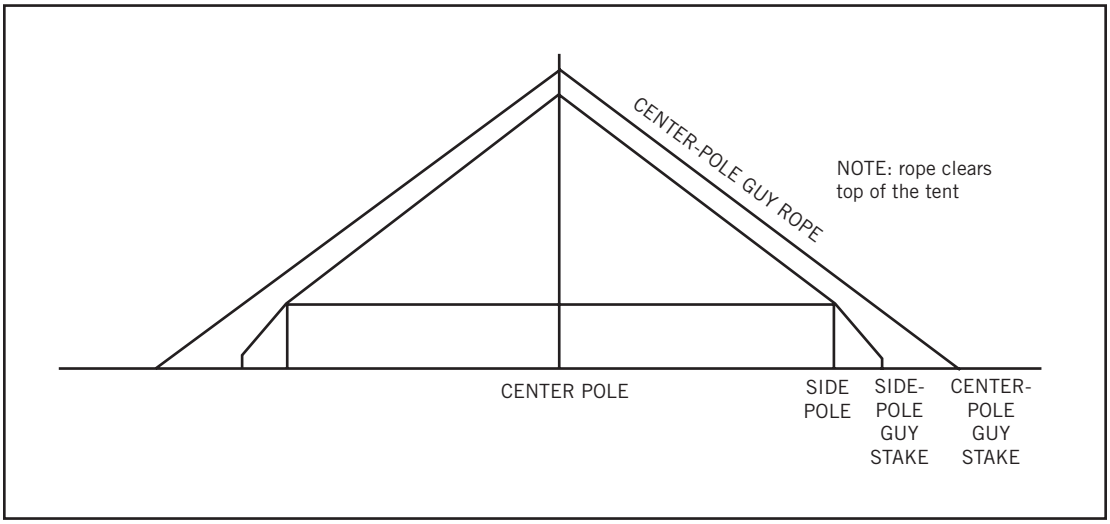

Figure 39. *Tent with Center-Pole Guy Ropes—End View*

CHAPTER THREE: Center Pole Assembly and Raising

3

The purpose of this chapter is to aid the tent installer in the correct and safe assembly and raising of bail-ring center poles. This is an important part of the installation process and should only be supervised by an experienced crew chief to ensure safety and accuracy.

Bail-ring center pole assemblies typically consist of several parts: a base plate of some type, sectionalized center pole, a bail ring, one or two sets of block and tackle, and a set of center-pole guy ropes that are often attached to a ring that fits over the top of the center pole. The base plate helps the center pole pivot into its vertical position and helps keep the pole base in its correct location. The center pole usually is sectionalized to facilitate transportation. The bail ring is a heavy metal device to which the tent top is attached and then raised by means of block and tackle (see ***Figure 40***).

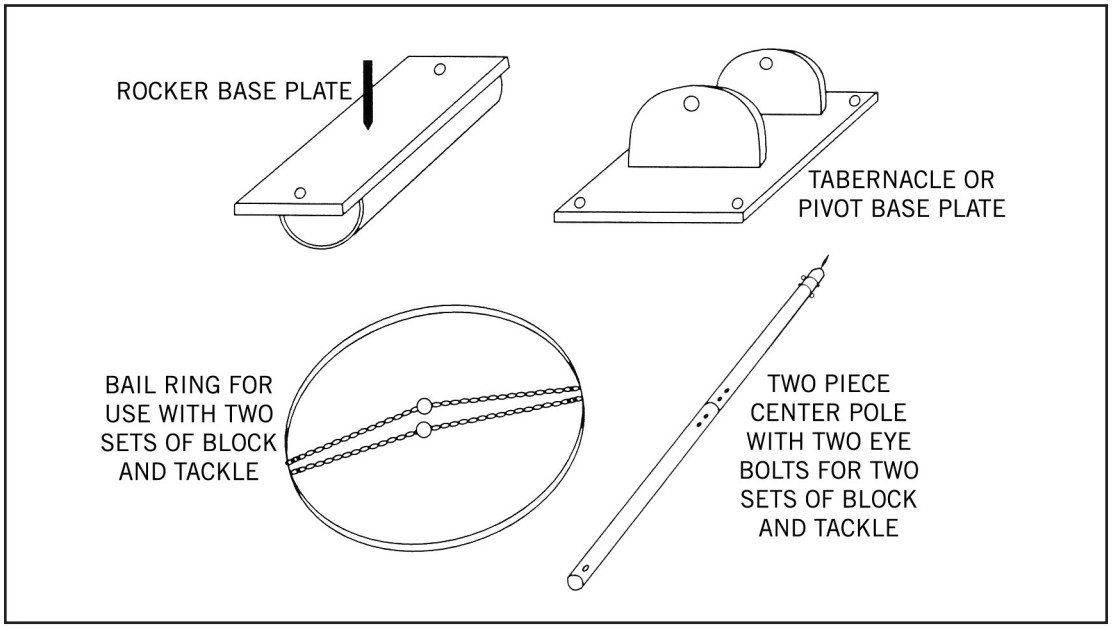

Figure 40. *Typical Bail-ring Tent Hardware Parts*

1. The first step is to position a base plate at each center pole location (A, B, C) and secure it by means of staking (see ***Figure 41***). Then the center pole sections are connected, bolted together for safety, and laid roughly in position with the bottom near the base plate and the pole laying roughly down the center line of the tent. At this point the bail ring is slipped around the bottom of the center pole and the pole is affixed to the base plate. It is helpful to block up the top end of the pole so that it is one foot or more off the ground.

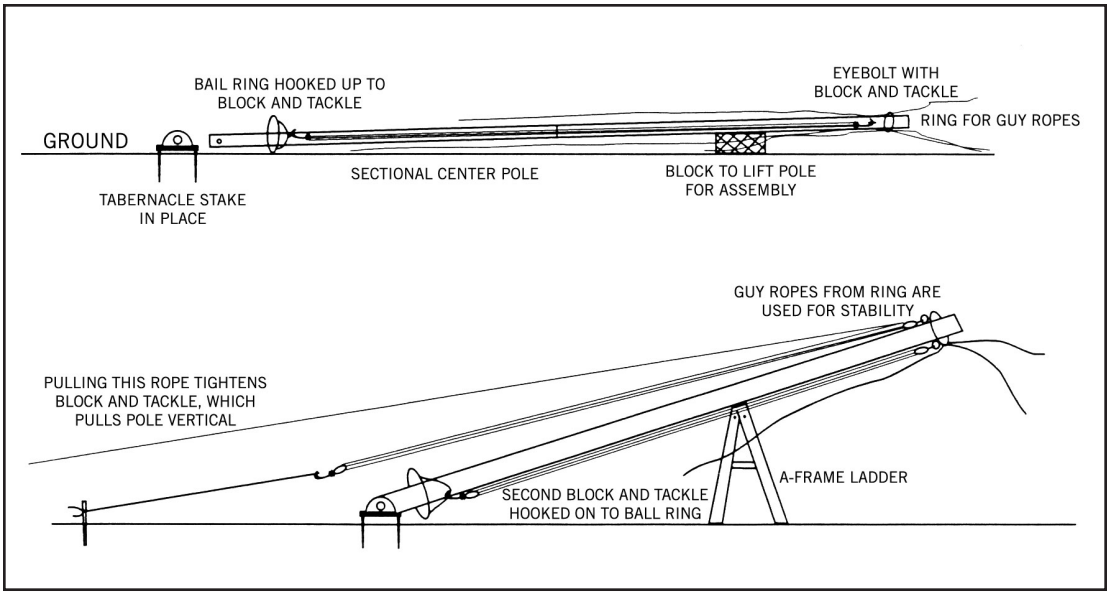

Figure 41. *Ground Assembly of Center Pole and Related Equipment*

2. Once the pole has its base in place and the top off the ground, the block and tackle(s) should be hooked on the eyebolts at the top and stretched down to the bottom. Next, the set of guy ropes are placed over the top of the center pole and the ropes are spread out to their stakes (see ***Figure 42***). With all of this completed for each of the center poles, it is time to begin raising the poles into their vertical position.

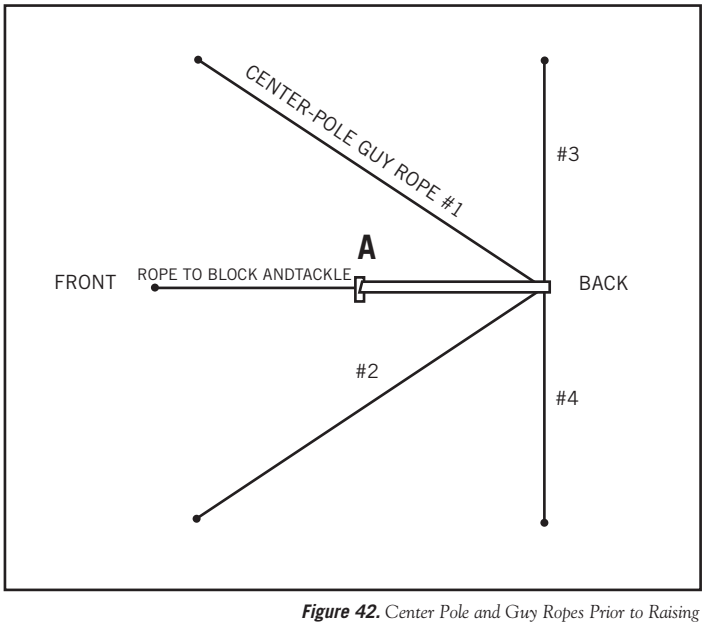

Figure 42. *Center Pole and Guy Ropes Prior to Raising*

3. To raise the poles, a stake is driven in the line of pull and a rope is attached to the bottom of a block and tackle and tied off to this stake. (This stake should be removed after the poles are up and secure. However, some installers use the base-plate stakes or perimeter stakes for this purpose.) Then the center pole is lifted to an A-frame (a six-foot ladder is a good substitute), and the rope on the block and tackle is tightened in preparation for lifting. At this point, it is crucial to have someone at each guy rope to "run" the knot and to keep the pole going up evenly, without falling to one side or the other.

4. Initially, the back two ropes are hand-tight and the front two are loose. As the crew pulls on the block and tackle, the rope leading to the front center stake tightens and begins raising the pole. As the pole rises, the ropes to the back two stakes constantly are being loosened, while the ropes to the front outside stakes are being tightened. When the pole reaches a vertical position, all four guy ropes are secured with the normal clove hitch, and the block and tackle can be loosened, pulling the block back down to the pole base. This process is repeated for each center pole until all are upright and properly secured (see ***Figure 43***).

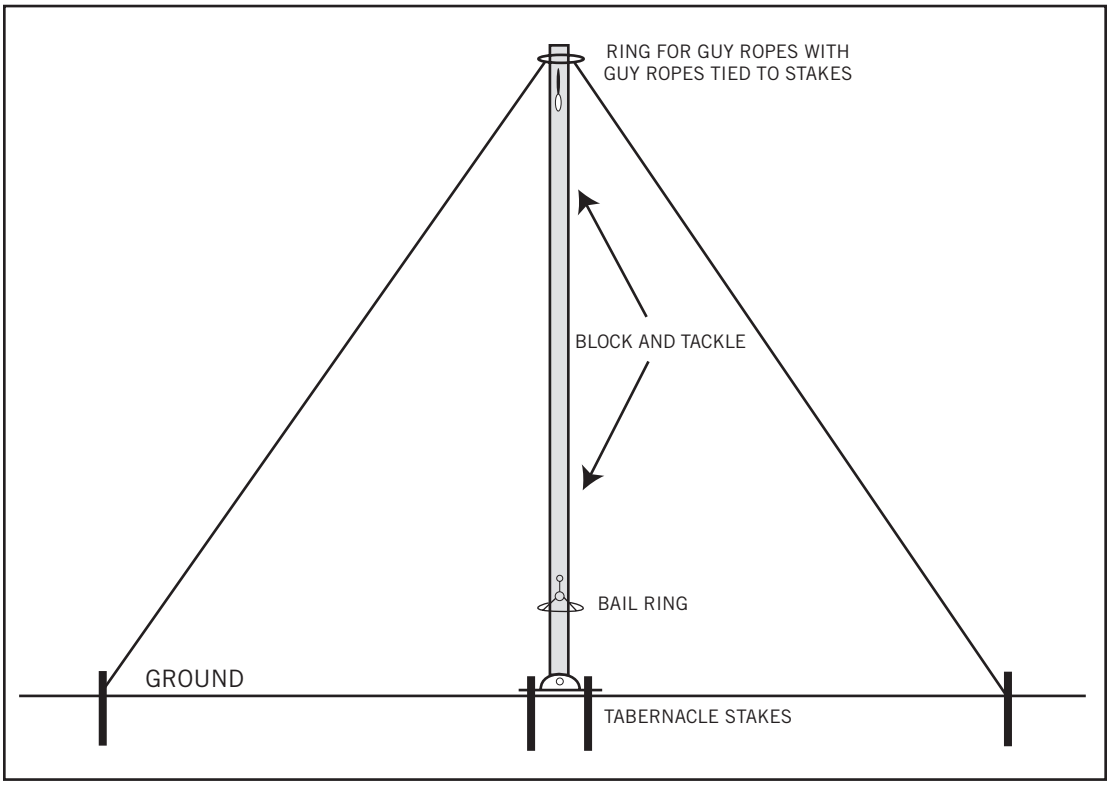

Figure 43. *Center Pole Raised with Bail Ring in Lowered Position*

Safety precautions are important during the center pole raising process. An experienced supervisor must oversee the operation, with trained installers working the knots as the poles go up. Only one person should give instructions to ensure no ropes are too tight or too loose. If a center pole falls during raising, it can be extremely dangerous. Therefore safety, not speed, must be the foremost consideration.

CHAPTER FOUR: Fabric Top Installation

4

The purpose of this chapter is to aid the tent installer in the proper and safe installation of a bail-ring tent top. With a tent of this size it is important to have proper supervision to make sure it is safe, that work not be duplicated due to oversights, and to ensure the tent pulls out properly.

1. With the center poles raised and rigged with the block and tackle, and with the stakes driven, it is time to lay out the tent top and lace it together, as specified by the manufacturer. Once laid out and laced, it must be attached to each of the bail rings. This attachment may be a lacing system or a series of shackles. Whichever system is used, must be securely tied onto the ring and the bail ring hooked to the bottom block of the sets of block and tackle on each center pole.

2. It is now time to tie in the side poles, tie off the guy ropes, and raise the side poles, as with the pole-supported tent. When all the side poles are up and loosely secured, the crew will go under the fabric to each center pole and raise the bail rings approximately halfway up the pole by means of tightening the block and tackle. When the tent top is at the halfway point, secure the block and tackle ropes to hold the top in place. This step takes some of the weight off the ground to facilitate the next step, which is the installation of the quarter poles.

3. As with a push-pole tent, the quarter poles are now installed, tied in, and pushed up to an almost upright position. Now that the side poles and quarter poles are tied in and standing, the crew returns to the center pole block and tackle and raises them to the manufacturer's specified height. This has the tent top entirely in the air and ready for tensioning.

4. The first step in the tensioning process will be to get the perimeter set so that the corners are on their predetermined mark and the "rim" is tight. Then the center line and lace lines should be tensioned. Finally, the other ropes will be tightened, returning to the corners if necessary. (See Part I, Chapter 4 for tensioning techniques.)

5. With all the ropes tight, the crew should push the quarter poles to their final desired location and stake them down like a pole-supported tent. Additionally, after the final tensioning, the center-pole block and tackle should be checked to ensure proper tension and lift. It is also critical to ensure the block and tackle ropes are securely tied off to hold the bail ring in its correct and final position.

 © 2004 IFAI Tent Rental Division

CHAPTER FIVE: Safety and Maintenance

5

As noted in Part 1, Chapter 6, of this handbook, the usual safety checks and precautions must be attended to.

Additionally, the guy ropes and stakes supporting the center poles must be inspected to make sure they are capable of supporting the load on them.
Also, the block and tackle holding the bail ring need to be in good condition, in proper alignment, and securely tied off. As with all tents, regular inspection and maintenance is imperative to keep the tent in safe condition.

The manufacturer's instructions must be followed. Those instructions take precedence over any conflicting instructions that may be contained in this handbook. In the event of a conflict, follow the manufacturer's instructions and warnings.

 © 2004 IFAI Tent Rental Division

TENT

RENTAL DIVISION

OF THE INDUSTRIAL FABRICS ASSOCIATION INTERNATIONAL

THE IFAI PROCEDURAL HANDBOOK FOR THE SAFE INSTALLATION AND MAINTENANCE OF TENTAGE

Part Three

Pipe Frame-Supported Tents Through 60-Foot Widths

An IFAI DIVISION

CHAPTER ONE: Introduction

1

Pipe-frame tents exist parallel to pole tents as an integral part of most any tent rental inventory. These units have the noticeable difference from pole tents of standing without using interior poles or supports. Yet the diligence with which they must he anchored in place, the way they are addressed by fire or building codes, and the external pressures applied to them by the natural elements are identical to that of pole tents. This document's purpose is to inform the reader of the basic principles involved with pipe-frames, and contribute to the general understanding of such equipment. While there are a number of pipe-frame systems on the market today, it is not this document's intent to endorse a particular frame, nor will it refer to any frame by trade name. The qualities of component materials in pipe frames also will be addressed to assist in assessing the relative qualities of a given product. In this chapter, we will describe, in general terms, the makeup of these pipe-frame tents, their common installation practices, proper anchoring techniques and field maintenance issues to ensure safe installation.

Definition: Pipe Frame-Supported Tent

A shelter composed of a framework of standardized pipe/tubing, joined together with connection fittings, be they steel or aluminum, which becomes the supporting element for fabric rool The framing supports the roof structure, allowing unrestricted ground space within the structure.

BACKGROUND

Although the pipe frame-supported tent has been a regular in the rental trade for decades, its form and function have been in use for many centuries, on many continents. Wood frames covered with tanned animal skins regularly were used for houses and shelters by nomadic groups. These people designed their own stable, yet easily transportable, structures, because they were often moving. Such framed structures have been documented throughout North America, Africa, and Eastern Asia. Familiar names given to these shelters are the *tepee* used by Plains Indians of North America and the *yurt* used by groups in the Asian Steppe of Western China, Mongolia, and Eastern Siberia. Each culture and region developed its own shelter based on its needs, climatic conditions, and materials at hand. The look of these various shelters differed, but the design principles are essentially the same as the pipe frame-supported tents used in the rental trade.

 © 2004 IFAI Tent Rental Division

TYPES

The many pipe-frame tents in the marketplace may seem remarkably similar in style. Yet, there are construction differences worth mentioning, as they are distinct one from another when given a closer view. The primary styles include:

- **Rafter-Supported Roof**
  A common design, with the roof fabric tensioned down over a number of straight rafters framed with a uniform slope to give drainage to the structure. The exterior look is similar to that of a properly installed pole tent.

- **Center-Supported Roof**
  These share the look of many tension-structure designs with a varying slope in the roof. This is often accomplished by tensioning the roof fabric to the frame perimeter from a center point, usually a partial center pole supported from a rafter frame or a tensioned cable inside the tent.

- **External-Supported Roof**
  More contemporary and less common, these have a rafter system on the outside of the fabric. The roof fabric then is fixed at the perimeter of the frame and tensioned to the peak of the frame, giving the fabric a varying slope similar to the center-supported roof.

BASIC PHYSICAL PRINCIPLES

For as much as the relative strength of a given pipe frame lies in its design, construction, or anchoring, the overriding element is the materials from which the frame is fabricated. The physical properties of the materials are determined by the particular mineral composition of the metal alloys in use and by the dimensions of the given component. By understanding the physical characteristics of the pipe or tube and its connectors, however, we can develop a working knowledge of the relative strengths and weaknesses of various pipe-frame tents.

 © 2004 IFAI Tent Rental Division

ELEMENTS OF PIPE-FRAME STRENGTH

- ***Pipe Diameter***
  The larger the pipe diameter, the greater its lateral strength will be, provided the wall thickness is proportionally consistent throughout.

- ***Pipe Wall Thickness***
  The thicker the pipe sidewall, the stronger it will be, provided the diameter is the same throughout.

- ***Pipe/Connector Overlap***
  The greater the overlap between a pipe and a joint fitting, the stronger the connection will be.

- ***Pipe/Connector Tolerance***
  The tighter the fit between a pipe and a connector, the stronger the connection will be.

- ***Unsupported Spans***
  The shorter the span of pipe, the stronger the span of pipe will be.

With this listing of basic structural principles, one can begin to understand the relative strength of any given pipe frame. One must not, however, overlook the importance of proper assembly and anchoring in understanding the full strength of an installed pipe frame.

The common terms *freestanding* and *self-supporting* are used interchangeably to describe pipe-frame tents. This is correct. Both terms highlight the desirable element these tents offer both the rentor and user. It is incorrect, however, to confuse these terms with the idea that pipe frames do not need proper anchoring, which is a common myth.

The pole tent receives both the roof tension and the structural stability through the guy line anchoring. In contrast, the pipe frame gains only roof tension through attachment of the fabric top to the frame and, without proper anchoring, the structural stability of the pipe frame against the weather is left unaddressed. In a proper installation, it cannot go unaddressed because a pipe frame tent is subject to the same wind loads as a pole tent of the same size.

Thus, it is appropriate to say that the anchoring requirements of a pipe-frame tent and a pole tent of the same dimensions, for all intents and purposes, are the same. In all cases, the installation should meet or exceed the manufacturer's recommendations for proper assembly and anchoring.

 © 2004 IFAI Tent Rental Division

CHAPTER TWO: Site Survey

2

The procedures for performing a site survey for pipe frame-supported tents are essentially the same as those for a pole-supported tent. Please refer to the site survey instructions given in Part 1, Chapter 1, of this handbook.

 © 2004 IFAI Tent Rental Division

CHAPTER THREE: Layout, Assembly and Raising

3

This chapter is intended to be a general guideline for assembly of a generic pipe frame-supported tent. It is not a guideline for the installation of any one type of frame tent. The following instructions are a synthesis of all recommended manufacturer's assembly instructions submitted to IFAI for the purpose of this document. As all tents have their own instructions, it is essential for safety reasons that each tent be installed per the manufacturer's instructions and not solely according to this document. This document is intended to familiarize an installer with the basic theory and technique involved in pipe frame-supported tents and to educate about safe installation and maintenance.

Note: There are various manufacturers and styles of pipe frame-supported tents available to the industry. Although the principal concept is the same, each brand and model is different in its structural components and design. Therefore, assembly technique as recommended by the manufacturer will vary.

LAYOUT

Prior to the actual layout of the tent, it is necessary to have all required parts present at the site. Therefore, it is recommended that all parts be inventoried as they are loaded to go to the site. Most manufacturers supply a parts list with their assembly instructions that can be used as a load list.

Loading is a good time to inspect the frame members for signs of wear, such as cracked weldments, etc. These parts will have to be repaired or replaced prior to installation. Attempting to install a tent without all required parts, or "jury-rigging" the tent with the items on hand, is unwise and unsafe.

As a frame tent is a self-supported rigid structure, pre-staking the layout of the tent with measuring tapes is not usually required.

The layout begins with the frame parts being laid out on the ground in the approximate location that they will be when the frame is assembled. The perimeter parts are laid out to form the perimeter, and the roof support parts are placed in the interior in their general locations. Laying out the parts in this way facilitates the assembly.

PERIMETER ASSEMBLY

The perimeter frame members are assembled first. (This is the part of the frame at the top of the uprights.) They are assembled together, with the required connectors and hardware, per the manufacturer's instructions. The specific methods vary among manufacturers.

Note: Some manufacturers recommend installing the rafter system first. As with all of these guidelines, the tent manufacturer's instructions take precedence.

 © 2004 IFAI Tent Rental Division

THE RAFTER SYSTEM

After the perimeter assembly is complete, the assembly of the rafter system begins. Usually the first step of the installation is to attach a hip rafter to a corner fixture and to the center fixture at the apex (sometimes called a crown, hub assembly or "spider").

Next, the adjacent hip rafter is installed. **Note:** If the tent is more than 25 feet wide, with a pitch of six feet or more, a ladder or tent jack may be needed to assist in the frame assembly at the apex and along the ridge.

The rafter system of a square tent is completed by installing the remaining two hip rafters then any intermediate rafters if required.

If a tent is rectangular, the roof support system is completed by assembling the hip at one end of the tent then installing the ridge and its intermediate rafters as well as any horizontal rafter braces. The remaining hip rafters, intermediate rafters, and end horizontal rafter braces are installed last. The upper tent structure is complete

FABRIC TOP INSTALLATION

If the fabric cover is in sections, it can be laced together on the ground or laid over the frame. Lacing should be done per the manufacturer's recommendations. The following instructions presume the tent top has been assembled into one piece.

The fabric cover is laid over the frame until it is approximately in the place where it will be attached to the frame. With larger tents, this is usually accomplished by spreading the tent out on one end and "flapping" the cover while pulling it over the top. Although the fabric is usually secured to the frame once the tent is raised, it is recommended that the cover be secured at the comers and at about every ten feet along the perimeter.

RAISING THE TENT

Before raising the tent, the structure should be secured to appropriate anchorage. Unsecured, the tent will react like a sail or kite in sufficient wind, resulting in potentially dangerous and damaging conditions. Securing the tent at this time will limit its movement.

One side of the tent, along its length if rectangular and always downwind, is raised by manual lifting and/or tent jacks to a height that allows the installation of the uprights. If braces are required between the uprights and the upper structure, they should be installed at this time. Then the opposite side is raised in a similar fashion. After any necessary braces are installed, the intermediate uprights and braces are installed. Complete the securing of the cover to the frame at this time.

If the uprights can be adjusted in height, the tent now can be raised and leveled to the desired height. Do not exceed the manufacturer's recommended maximum height. The tent is now ready for final staking and guying.

 © 2004 IFAI Tent Rental Division

CHAPTER FOUR: Staking and Anchoring

4

The purpose of this chapter is to aid the tent installer in the anchoring of pipe frame-supported tents.

There are a variety of anchoring devices available to the installer. These are discussed in detail in Part 1, Chapter 2.2. That section also covers basic staking theory and should be read and studied prior to attempting to install any tent. Please refer to it for further detail on types of anchors. The single-most important point to remember is that it is necessary to anchor a frame tent.

A common misconception within our industry, particularly among novice installers, is that because a frame tent can temporarily stand on its own without guy ropes, minimal or no anchoring is required. That is not true. A frame tent, regardless of size, is subject to the same wind loading and uplift characteristics as a pole-supported tent of similar size. Therefore, it is imperative that it be anchored with the same consideration given to any other tent style.

Another commonly held misconception is that frame tents can be properly secured by only staking straight down and tying off at the base of the leg. Although it is true there is some lateral stability inherent to a pipe framesupported tent, it does not have enough strength to withstand any significant lateral force. Therefore, appropriately angled guys must be used to provide additional lateral support.

After the frame has been assembled and the top fabric has been installed (and prior to raising the structure) the stakes should be put in place. The stakes should be placed at the corner uprights and at each of the intermediate uprights if applicable (see ***Figure 44***).

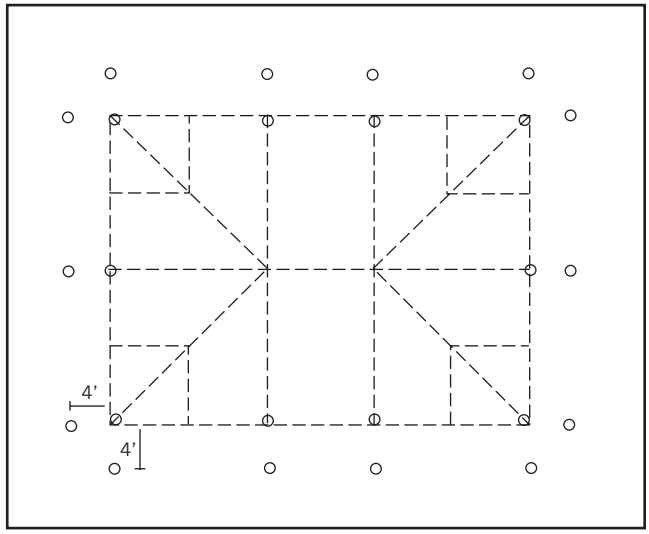

Figure 44. *Suggested Stake Placement for Typical Frame Tent*

These stakes should be placed at a distance from the base of the leg no less than one-half the height of the upright and no greater than the height of the upright (see ***Figure 45***). As always, manufacturer's specifications should be met or exceeded at all times.

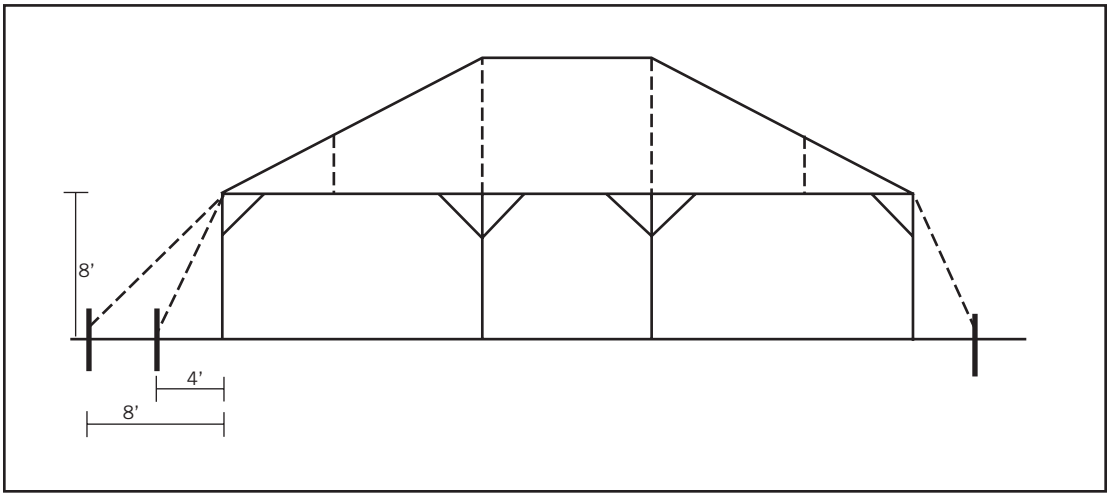

Figure 45. *Suggested Guy-Rope Angle for Typical Frame Tent*

Some manufacturers drill holes in the base plate of the upright as an additional anchoring point. However, these base plate holes should never be used as the sole anchoring point of the frame. Driving a spike (or pin, bolt, screw, etc.) through this hole decreases the chances that the upright will lift and move, creating a condition that could lead to failure of the upright.

Once the stakes (or alternate anchoring devices) are in place, the frame is ready to be raised and the uprights installed. Remember to attach the guy ropes to the frame prior to raising. In windy conditions, it is advisable to loosely tie off the guy rope to the stake prior to raising the frame, leaving only enough slack in the rope for the upright to be inserted.

Once all the uprights are installed and the tent is in place, adjust the guy ropes as taut as possible, checking to make sure the knots are secure.

CHAPTER FIVE: Safety and Maintenance

5

A pipe frame-supported tent, just like any other tent, must adhere to all local building and fire codes that pertain to its intended use. Although it is a self-supporting and free-standing structure, it is potentially mobile until properly anchored.

Pipe frame-supported tents, though sometimes referred to as rigid frames, actually do flex. Proper ground anchoring is an essential part of the tent's design. If not properly secured at the base, the uprights can move.

Strong weather can effect a pipe frame-supported tent as much as a pole-supported tent. The ground anchoring is equally critical. Each manufacturer's frame design may vary in its wind and snow load capabilities. Refer to the manufacturer's guidelines to determine how much wind or snow load a frame tent can withstand.

The manufacturer's instructions must be followed. Those instructions take precedence over any conflicting instructions that may be contained in this handbook. In the event of a conflict, follow the manufacturer's instructions and warnings.

 © 2004 IFAI Tent Rental Division

TENT

RENTAL DIVISION

OF THE INDUSTRIAL FABRICS ASSOCIATION INTERNATIONAL

THE IFAI PROCEDURAL HANDBOOK FOR THE SAFE INSTALLATION AND MAINTENANCE OF TENTAGE

Part Four

Box-Beam Frame-Supported Tents Through 100-Foot Widths

An IFAI DIVISION

CHAPTER ONE: Introduction

1

This part of the handbook will review the installation and maintenance of the box-beam frame-supported tent, sometimes referred to as *clearspans*. The box-beam frame-supported tent is unlike any other tent in the rentor's inventory. The knowledge gained from installing pole tents or pipe frame-supported tents cannot be readily adapted to aid in the installation of box-beam frame-supported tents. Everything from the way the tent is transported to the equipment used during installation is different.

In light of these differences, safety should be of paramount concern to every company that transports, installs, and removes box-beam frame-supported tents. Failure to follow the proper installation techniques can result in injury and even death of the installers. The following is a compilation of installation guides from a number of manufacturers. This guide is a companion to the installation instructions provided by the tent's manufacturer and should not be the only source of information used to install box-beam frame-supported tents.

 © 2004 IFAI Tent Rental Division

CHAPTER TWO: Site Survey

2

The procedures for performing a site survey for box-beam frame-supported tents are essentially the same as those for a pole-supported tent. Please refer to the site survey instructions given in Part 1, Chapter 1.

 © 2004 IFAI Tent Rental Division

CHAPTER THREE: Layout and Anchoring

3

After establishing the desired location of the tent, locate the first corner. Run a measuring tape or a string line from this corner down the length of one side of the tent. Temporarily secure the first corner plate. Place the remainder of the base plates down this first side by using a spacing bar, surveyor's transit, or a tape measure. Temporarily stake all base plates as you go so that none are inadvertently knocked out of place.

Next, determine the other two corner base plates by using a squaring cable or using the 3-4-5 method. (See Part I, Chapter 2.1, ***Figure 7a***)

Run a string or tape line between these two corner base plates and once again set the remainder of the base plates along this side. Double-check the layout to ensure it is square. Base plates may be staked down now or after the arches are assembled, depending on the manufacturer's directions.

 © 2004 IFAI Tent Rental Division

CHAPTER FOUR: Assembly and Raising

4

PARTS PLACEMENT

Lay the arch components in their approximate position inside of the base plates.

COMPONENT ASSEMBLY

Beginning with the first arch, connect all beam sections and uprights in the order suggested by the manufacturer. Repeat these steps until all arches are complete. Cable brackets and purlins may be installed now if required by the manufacturer.

Caution: Before beginning the erection of the arches, each worker should be informed of the steps involved in raising each arch. To avoid confusion, it is important that no more than one installer gives orders. Your manufacturer will suggest the proper number of installers as well as any heavy equipment that may be required.

RAISING OF ARCHES/BEAMS

Connect the recommended stabilizing tools (guy ropes, diagonal bars, etc.) to the first arch to be erected. Using the recommended manpower and/or machinery, raise the first arch. It is imperative that the arch be secured at this time to ensure that it does not fall, causing injury and damage.

After raising the second arch and placing it in the proper position, install the purlins in that bay. Roof and side cables also should be installed and tightened to properly align and stablize the structure. Continue raising the remaining arches and purlins, making sure to install and tighten roof and wall cables as required. The gable end posts and baseplates (if required) now may be installed by connecting the posts to the arch and then to the base plate.

FABRIC TOP INSTALLATION

Lay out the roof panels on the side opposite from which they are being pulled. Install the pulley wheels, tension winches, etc., that will be used to aid in the installation of the panels. Attach the pull-over ropes to the roof panel. Pull and feed the panels into the tent frame in a manner consistent with the manufacturer's directions. The panels should be tensioned in the order recommended by the manufacturer. The gable end and side panels now may be installed. The nature and design of the gables and sides vary among manufacturers. Follow the tent manufacturer's directions when installing and tensioning them.

 © 2004 IFAI Tent Rental Division

CHAPTER FIVE: Safety and Maintenance

5

Assembly and dismantling of box-beam frame-supported tents (clear-spans) is by far the most potentially dangerous of all the different tent types. Assembly and dismantling should not be attempted without a supervisor familiar with box-beam frame-supported tent assembly and dismantling procedures.

SAFETY CHECKLIST

1. A complete briefing, covering installation, dismantling procedures, and possible hazards, should be given to all workers prior to starting work.

2. It is strongly recommended that workers wear clothing appropriate for a construction site.

3. A site inspection should be made to locate and avoid any overhead or underground water, electrical, gas, phone lines, etc., prior to installation.

4. Maintain an organized and disciplined work site, especially during the erection and dismantling of the beams and purlins. Communication between workers can prevent injury to workers and/or damage to equipment.

5. Use the utmost caution when assembling beams. Do not insert fingers into beam assembly holes. This could cause serious injury.

6. Exercise extreme caution until standing beams are secured. Unsecured beams pose an extreme hazard.

7. A visual inspection and repair, if necessary, should be made of all fittings, welds, rivets, etc., while assembling frame.

8. When installing purlins, make certain they are properly secured. A purlin that is not properly installed can suddenly come loose, swing down and strike anyone in its path. Workers should be constantly reminded to watch for beams or purlins.

This document cannot anticipate all possible installation variables. At all times, practice safe working procedures appropriate for a construction site, where carelessness could result in serious injury or death.

 © 2004 IFAI Tent Rental Division

MAINTENANCE GUIDELINES

Wall Cables

1. Re-tighten turnbuckles.
2. Check all connecting devices.

Roof Cables

1. Re-tighten turnbuckles.
2. Check all connecting devices.

Base Plate

1. Check all stakes.
2. Check all connecting devices.

Roof and End Fabric

1. Check fabric tension.

The manufacturer's instructions must be followed. Those instructions take precedence over any conflicting instructions that may be contained in this handbook. In the event of a conflict, follow the manufacturer's instructions and warnings.

 © 2004 IFAI Tent Rental Division

TENT

RENTAL DIVISION

OF THE INDUSTRIAL FABRICS ASSOCIATION INTERNATIONAL

THE IFAI PROCEDURAL HANDBOOK FOR THE SAFE INSTALLATION AND MAINTENANCE OF TENTAGE

Part Five

Tensile Structure Rental Tents

An IFAI DIVISION

CHAPTER ONE: Introduction

1

It is recommended that the reader be familiar with all parts of the manual to fully understand and appreciate the information being presented. It is extremely important to recognize the difference between a traditional pole tent and a tensile structure. The nature of the tensile structure makes the installation and tensioning process quite different and consequently requires a more exacting layout and finishing process. For Part Five of this handbook, we will use the terms *anchoring and staking* and *tensioning and tightening* interchangeably.

FABRIC SUPERSTRUCTURE

A traditional pole tent is made of a skin of canvas or vinyl that is sewn or welded onto a supporting superstructure of rope, cable, or web belts. See ***Figure 46***.

When the tent is tensioned, it is this superstructure that is tightened and distributes the stresses across the tent. When the superstructure is tightened, the fabric skin gets tightened with it. The loads exerted on the tent are transferred to the superstructure and thus to the staking system. The fabric (particularly canvas) does not provide structural strength of any significance.

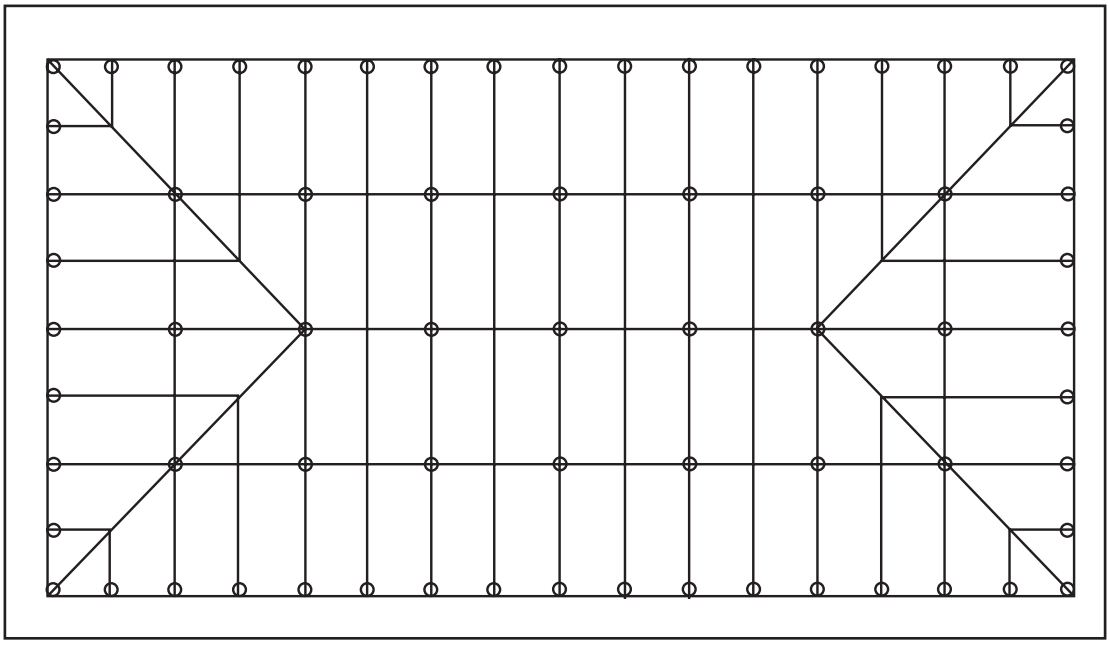

Figure 46. *Traditional Pole Tent Superstructure*

On a tensile-style pole tent, the superstructure is minimized and the fabric becomes a part of the structure of the tent. Perimeter webbing typically is used to put tension on the fabric top. Additional webbing is used at the lace lines for connecting the sections together and to distribute the wind loads that may be exerted on the tent. In some tensile tents, additional webbing may be added to reinforce specific areas that receive extraordinary stress and to apply additional tension to the fabric skin.

 © 2004 IFAI Tent Rental Division

An overall superstructure does not exist in a tensile tent. The skin is made of extremely strong vinyl fabric that is designed to be the main factor in distributing the loads exerted on the tent. The fabric is cut in very specific geometric patterns that curve when tension is applied. The geometry of the tent and the strength of the fabric help spread the loads over the entire surface area of the structure, not just a few points as in a traditional tent. Therefore, under a wind load, the push or pull exerted on the top transfers the stress over the whole roof system and redistributes the loads to the anchoring system. By distributing these loads more efficiently, the tent becomes appreciably stronger.

LOAD FACTORS

As with all tents, anchoring is of critical importance. The tensioning of a tensile structure has three load factors that must be considered.

1. **Pre-Stress Load** is the basic amount of tension required to pull the tent into the proper geometric shape.

2. **Design Load** is the amount of stress put on a tent under the maximum conditions for which it has been designed.

3. **Pull-Out Load** is a multiple of the design load that allows for a safety factor. Sufficient staking must be used to enable the tent to be tensioned to its designed shape and to allow for the safe use of the tent.

INSTALLATION AND TENSIONING

The designed shape or geometry of the tent influences how it will be tensioned. The first step is taken early in the installation process when the layout is accomplished. With a tensile tent, the marking of center pole and side pole locations is critical. The marking must be done in conformance with the manufacturer's design or the geometry will be changed and the design criteria will not be met. For the proper alignment of the center poles and side poles, be certain to ensure everything has been "squared" by double-checking the markings. Once this has been done, the tightening sequence will complete the process of shaping and stabilizing the tent. The goal of the tensioning is to put the tent into a designed geometric shape that will keep water from ponding and will enable it to withstand the forces of the wind up to its design load.

Since this type of tent has rather high tensioning requirements, most of the new tensile tents utilize web straps and ratchets for tensioning. The traditional pole tent practice of leaning a side pole in, pulling on, and tying off the guy rope and standing up the side pole is not effective with a tensile structure. What has become the accepted practice is placing the base of the side pole on the pre-marked spot and ratcheting the web strap until the side pole is vertical. This system, using web straps in lieu of ropes, offers more strength and requires fewer installers. One person can do the tightening.

Each manufacturer will recommend a process of installing and a sequence for tightening their tents but all are accomplishing the same purpose. First, the basic form of the structure must be attained by tightening the reinforced positions of the tent. This may include the perimeter, the lace lines, the center of the "saddle," or the points where reinforcing bands run the length of the tent. In each case, the end result is that the center poles and corner poles are essentially in their final position. Once this is accomplished, the remaining part of the tent is tensioned to stretch the fabric into its designed geometric shape.

 © 2004 IFAI Tent Rental Division

OVER TENSIONING

It is important to note that over-tensioning is a real concern with this style of tent. Since most of the structures use mechanical means to apply tension, an installer can pull the tent beyond its design limits. This can have two negative effects. The first is changing the designed shape of the structure which can cause ponding or can alter the way that loads are distributed over the tent and anchoring system. These situations can compromise the structural integrity of the completed tent. The second danger is literally pulling the tent apart by applying too much tension on the fabric and webbing. If extreme tension is applied, the components of the tent may begin to fail, which can cause the entire structure to fail. For these reasons it is imperative that the tent be properly measured and marked out and that the tensioning cease when the poles are in their vertical, designed position.

As you read the following sections, please keep in mind the differences between a traditional tent and a tensile structure. All personnel who are involved in the selling, planning, and installation of these structures must understand their unique characteristics and observe the important setup criteria given in the following sections as well as those criteria given by the tent manufacturers. Keep in mind that safety is paramount and that proper installation technique helps ensure a safe installation.

 © 2004 IFAI Tent Rental Division

CHAPTER TWO: Site Survey

2

Since there are parallels between pole tents and tensile structures, this chapter should be considered in addition to Part 1, Chapter 1. When evaluating a site for a tensile structure installation, one must continually give consideration to the manufacturer's specifications for pole placement, anchor placement, anchor holding strength, and slope of the installation site. This information will be shown on the design print for the given tensile structure to be installed. In all situations, one must follow this criteria in order to install the structure correctly with all its aesthetic and structural distinctions.

UTILITIES

As is the case with any tent installation, identification of all utilities, both overhead and underground, is the first step to a safe installation. Once the site has been properly marked by the appropriate utilities, the installation can proceed with peace of mind. The location of the utilities may affect the final location of the installation. (The increased number of stakes and/or the increased height of the main poles also may affect the positioning of the tensile structure to avoid a particular underground or overhead obstacle.)

ACCESS

Tensile structures, while allowing great spans between poles, provide access by making use of fabric sections and internal poles, which can be substantially larger than those of their traditional pole tent predecessors. Moving these larger fabric sections and poles into and out of a given site must be taken into consideration at the initial phase of the project. Access for mechanized equipment used during installation or removal will need to be assessed as well.

TERRAIN

Tensile structures are designed for flat surfaces. Moderate ground undulations should be addressed to maintain a uniform eave plane and maximize the integrity of the installation. This may require blocking up some side or center poles in low spots or substituting a shorter pole on higher ground.

 © 2004 IFAI Tent Rental Division

SITE SURFACE

The installation surface must be considered for its ability to withstand the increased downloads at all pole locations. This can typically be addressed by blocking under the poles. It must be noted, however, that the size of certain tensile structures with their design criteria and the mechanized equipment used in their installation and removal may make them unsuitable for some sites.

ANCHOR PLACEMENT

Anchor placement is crucial to the safe installation of a tensile structure. The roof fabric must be pulled at specific angles from specific locations to meet the design criteria as established by the manufacturer. Thus, the placement of the anchors needs to be considered in the initial phases of the project. Patios, sidewalks, trees, ponds and any other features that are a break from open space must be noted or plotted as obstacles to be considered in the final placement of the tensile structure.

While the tensile structure has many similarities to the traditional pole tent, one must be aware of and give particular attention to the differences that these structures have from their predecessors. The chapters to follow will continue to emphasize these distinctions, as they are the key to the safe installation of tensile structures

 © 2004 IFAI Tent Rental Division

CHAPTER THREE: Layout and Staking

3

The purpose of this chapter is to aid the installer in the safe layout and staking of a tension-style tent. Due to the similarities between tension-style tents and traditional pole-supported tents, it is recommended that readers familiarize themselves with Part 1, Chapter 2 before starting this chapter.

The primary difference between the two styles (other than aesthetic) is the increased wind load that the tension-style tent is capable of withstanding. In order to accomplish this, the number of stakes or anchors required to meet the designed loads increases significantly with the tension-style tent.

LAYOUT

Due to the accuracy required in locating the stake and center-pole positions in a tension-style tent, the pre-staking method of layout is necessary for proper installation.

To begin, determine the position of the first corner. Then, using a tape measure, lay out the perimeter of the tent. With a second tape measure, check the diagonal measurement between the corners (see Part 1, Chapter 2.1, for further details on squaring and pre-staking).

With the footprint of the tent properly squared and marked, locate and mark the base position of each side and center pole. It is important to mark the pole locations accurately in order to tension the tent correctly. These marks help make sure that the tent is not over-or under-tensioned.

Note: Pole spacing will vary depending on the manufacturer, the size of the tent, and the location of the pole within the tent. Please refer to the manufacturers' instructions for specific measurements.

 © 2004 IFAI Tent Rental Division

STAKE AND ANCHOR PLACEMENT

Using a tape measure, lay out a second line (the stake line) parallel to the side poles, per the manufacturer's instructions.

As stated in Part 1, Chapter 2.2, conventional wisdom places the stake/anchor at a distance from the side pole equal to 75%-100% of the height of the side pole (e.g. if the side pole is eight feet high, the stake/anchor should be six to eight feet from the base of the side pole). The closer the stake/anchor is to the side pole, the greater the downward force on the pole. As the stake/anchor is placed further away, the downward force is lessened, but the lateral force is increased. Generally, 75% of the height of the eave works best.

If the tent is to be erected on a raised platform, or the adjacent ground is extremely sloped, these factors must be taken into account when determining the proper guy angle for stake/anchor placement. For example, if a tent with an eave height of eight feet is installed on a platform that is four feet off the ground, the total combined height is 12 feet. Therefore, the stake/anchor should be placed at a distance of nine feet (75%) from the base of the platform. Please refer to the manufacturer's specifications for stake/anchor placement. Using the manufacturer's instructions, locate and install the stakes/anchors along the stake line.

Unlike traditional pole-supported tents that might require only one stake per upright, tension-style tents may require multiple stakes (gang staking) at numerous points in order to achieve the designed loads that the tent was built to withstand. Please refer to the manufacturer's instructions to determine the proper anchoring load required at each anchoring point.

In order to increase your understanding of basic anchoring principles, please refer to Part 1, Chapter 2.2. This chapter goes into great detail regarding the different types and styles of staking and anchoring, as well as the effect of soil types and conditions, guy angle, stake depth, etc.

FABRIC LAYOUT

Before placing the tent sections on the ground, remove or cover any sharp objects that may damage the tent fabric. Next, cover the area to be tented with a ground cover or drop cloth to further protect the tent and keep it clean during the installation process.

Open and unfold the tent sections. Inspect the sections for wear and install the necessary hardware, pole flanges, pole caps, etc. Join the sections together using the manufacturer's instructions. Most tent sections will attach using a lace and grommet style attachment. Starting at the center pole, install the center pole flange, if applicable, which will help to keep the main pole grommets from separating during installation, and while under tension.

Next, insert the first lace into the corresponding grommet (nearest the pole) and pull down toward the second grommet. Insert the second lace through the second grommet and then back through the first lace. Bring that lace down to the next grommet and insert the next lace through the grommet and previous lace, repeating the process until you have reached the end of the lace line. Once the lacing is complete ensure, that all rain flaps are properly secured.

Install the side guys to the anchors. Given the wide variety of anchors and anchoring devices in use within the industry, please refer to the specific manufacturer's instructions.

 © 2004 IFAI Tent Rental Division

CHAPTER FOUR: Poles

4

In general practice, the installation of side and main poles of tensile tents is similar to the installation of their counterparts in traditional tents. However, there are some important differences.

One of the most important differences is the greater loads that these poles must bear. Several factors contribute to these loads.

1. The tension required to pull the tent into its designed shape.

2. The use of ratchet and strap tightening devices that create higher tension loads on the poles.

3. Tensile tents tend to have wider pole spacing and higher pitches, which places larger loads on individual poles. So not only will the tensile tent probably require stronger poles, it may also require the use of blocks or plates beneath the poles to help distribute the load over a wider surface and prevent the poles from sinking into the ground. It is important to always meet or exceed the pole specifications set by the manufacturer.

Lifting the tent may also be more difficult since there may be fewer poles, the poles are larger and heavier, and the increased pitch of the tent adds more fabric. The use of mechanical means, such as a forklift, may be required to raise the tent. Proper care and caution must be undertaken to make sure the machinery is operated in a safe and professional manner to avoid injury to any crew members or the tent itself.

THE INSTALLATION OF SIDE POLES

Side poles are installed like those of a traditional tent. Make sure that the side pole pins go through all the required grommets, that the wall rope is on the outside of the pole pins and that the side poles are secured to the tent top by jump ropes (see Part 1, Chapter 3, ***Figure 27***) or similar devices as specified by the manufacturer. As with a traditional tent, the side poles are then raised with the guy lines loosely tensioned to hold them upright.

 © 2004 IFAI Tent Rental Division

THE INSTALLATION OF MAIN POLES

Depending on its width and design, the tensile tent may have one or more main poles across the width. This chapter will discuss the installation of single and twin pole configurations. One important point to remember about tensile tents is that the higher pitch in the fabric creates a greater opportunity to snag and tear the fabric when inserting and raising the main poles. It is imperative that the installers visually check to ensure that the tip of the main pole pin is not caught in the fabric when the pole is pushed through the grommets or when it is raised. Failure to do so may lead to a major tear in the tent top.

Single Main Pole Configuration

As with a traditional pole tent, the pin of the main pole is inserted through the grommets and secured with a jump rope or similar device. Then the top end of the pole is raised as high as possible by part of the crew while the remainder of the crew pushes and lifts the base of the pole towards its predetermined final location, keeping the base low to or on the ground. If there is only one main pole to install, it can be moved into its final upright position at this time.

If it is a multiple pole tent, it is easier to initially raise the first pole only partway. While in this angled position, the base of the pole should be secured (via staking or chocking, if needed) to keep it from sliding out while the next pole is inserted. (Raising the first pole to a minimum of a 45-degree angle lifts some of the weight of the tent, which facilitates the raising of subsequent poles while keeping their grommets within easy reach for the insertion of the next pole.)

With the first pole partially raised, insert the second pole into the designated grommets and secure it with the jump rope. Then raise the top of the pole, ensuring that the pin does not snag the fabric. Then push or lift the base of the pole into position. If this is a two-pole tent, the second pole can be placed in its final upright position before returning to the first pole and placing it in its final position.

If there are more than two poles, each subsequent pole is inserted, secured, and raised as above. Installers can choose to go back to each preceding pole and raise it to its final position, or they can wait until all the poles are raised partway before returning to complete the raising process.

It is important to place the bases of the main poles on their predetermined marks to ensure the tent is correctly aligned for its final tensioning. Additionally, the main poles should be secured to the ground in accordance with the manufacturer's directions.

 © 2004 IFAI Tent Rental Division

Twin Main Pole Configuration

Twin main poles are installed as a set. The process of raising them follows the same procedure as above but the matching main pole is raised simultaneously with the first. If it is not possible to completely raise both poles in tandem, a few of the crew members should be assigned to partially raising the matching pole as the first pole goes up. Once the first pole is raised to approximately a 45 degree angle, the matching pole along that first lace line should be raised to the same level. The bases of these first poles should be secured to keep them from slipping and then the crew moves on to the next set of main poles. The second set of poles are inserted into their grommets and secured to the tent top, taking care not to snag the fabric that is gathered near the pole pins.

Again, one of the poles is raised to the angled position with its matching pole being lifted into position along with it. If there are only four main poles, this second set can be placed in their final, predetermined position before returning to raise the first two poles into their final position. For longer tents, each successive set of poles is partially raised in the above manner until all sets of twin poles are installed. On longer tents with multiple sets of main poles, the crew can opt to return to each previous set and raise them to their final position or they can wait until all sets are installed in the angled, partially raised position before returning to the final raising of each set.

Once all sets of the twin main poles are upright and on their predetermined marks, they should be secured to the ground if recommended by the manufacturer. With all this completed, the tent is ready for the tensioning procedure.

 © 2004 IFAI Tent Rental Division

CHAPTER FIVE: Tensioning

5

Once you have properly laid out, staked, and raised the poles of a tensile structure, the tensioning process can begin.

Three typical interpretations of tensile structures are shown below. The lines drawn show the perimeters and the web reinforcement bands for each of the tents. The dots around the perimeter represent the side pole positions and thus the tensioning points on each tent. The numbers represent the order of tensioning, (i.e. those marked 1 should be tightened first, 2 second, etc.)

It is obvious that though the tents are slightly different in their design, the order of tightening goes to the key areas of the corners, lace lines, and reinforcing web positions. After they are tensioned, the basic shape of the tent is determined and the remaining tensioning is merely a matter of stretching the fabric to its optimum designed shape.

Example 1

In the first example, (see ***Figure 47***), the tent has a minimal amount of webbing superstructure to help form the basic shape of the tent top and to distribute the loads over the entire skin. As you can see from the drawing, the first tensioning is done on the points at either end of the tent that apply tension to the reinforcement banding. This pulls the center poles into their correct position lengthwise.

The second step is the tensioning of the lace lines. This straightens and stabilizes the center poles. The third step is the tightening of the corners. This process positions the overall tent in its rectangular shape. Then the valley or saddle that is between the center poles is tightened to pull the fabric to the predetermined shape and to ensure proper drainage. Finally, the ends of the tent are tightened to finish the tensioning and create the final shape of the top.

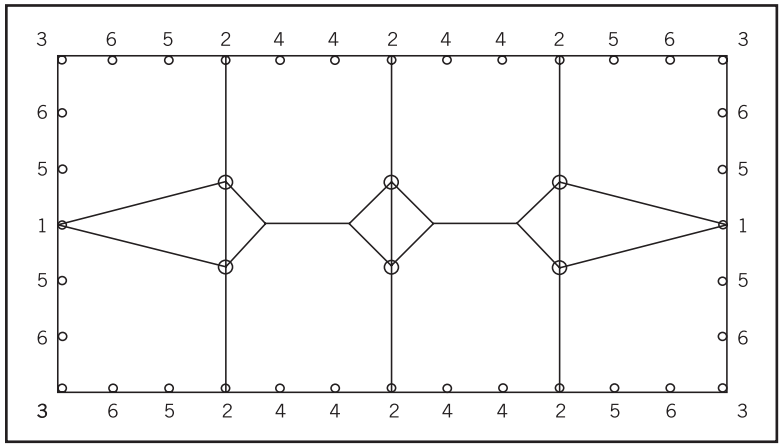

Figure 47. *Tensile Tensioning, Example 1*

As mentioned previously, the fabric components of a tensile tent are specifically designed and cut into pieces of fabric that will take on a designed shape when tension is applied. It is important to put sufficient tension on the structure to achieve this pre-determined shape and it is equally important not to over-tension the tent so as to distort the pre-determined shape. That is why careful measuring is required and strict accordance with the manufacturer's tensioning instructions must be followed.

 © 2004 IFAI Tent Rental Division

Example 2

This tent also has a minimal amount of webbing reinforcement to assist in achieving its shape and to distribute the wind loads (see ***Figure 48***). In this case, it is specified that the corners should be tightened first to properly position the tent in its squared configuration. You will note that this tent does incorporate hip reinforcing which places extra emphasis on the corners. The corners may need re-tightening after the rest of the tent is tightened to make sure these hips are pulled out properly.

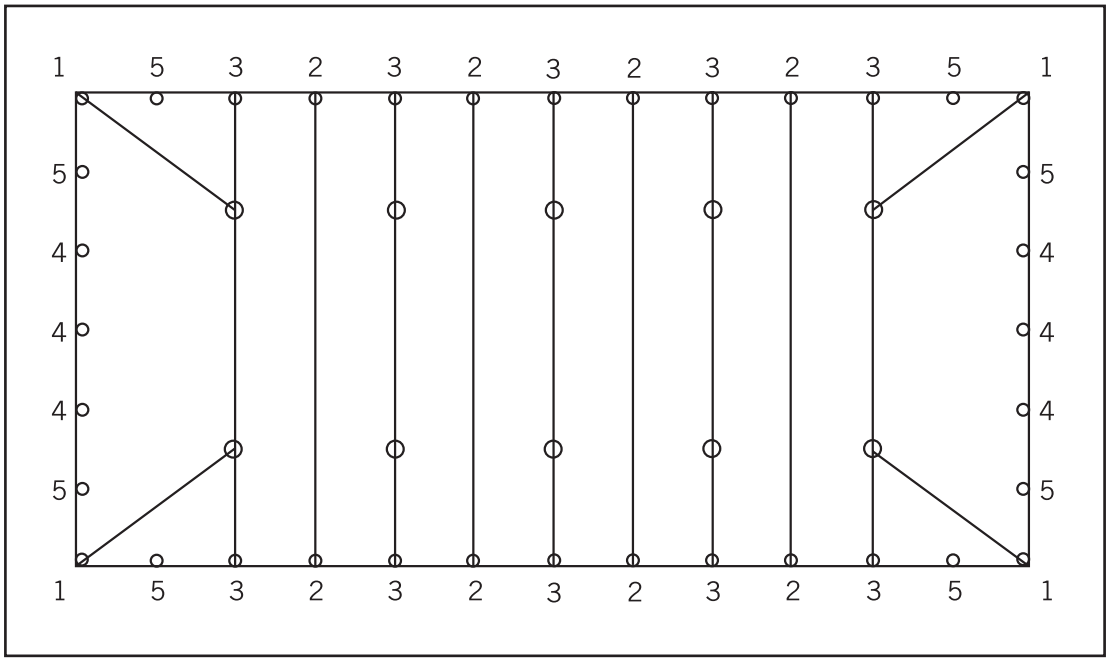

Figure 48. *Tensile Tensioning, Example 2*

The saddle or valley of this tent has been designed as a primary structural component so the webbing that runs through the saddle is tightened second to set the arch of the top and to ensure drainage. Then the lace lines are tensioned to straighten and stabilize the center poles. Next the ends are tightened to apply tension across the main tent surface. Finally, the guy lines on either side of the corners are tensioned to finish the process.

It is important to note that the tent must be pulled tight to conform to the designed geometry but not too tight to deform the structure or compromise the structural integrity of the overall tensile system.

Example 3

The third example illustrates a tent with no reinforcing webbing other than at the lace lines (see ***Figure 49***). This design spreads the tension more evenly over the entire surface of the tent top. The shape is determined by the cut of the fabric and the tensioning on the membrane and not by pulling on any reinforcing superstructure. When tightening this style of tent, the first tensioning is applied to the lace lines which stabilizes and positions the center poles.

Next, the corners are tightened to establish the final placement and shape of the tent. The ends are pulled out to apply surface tension across the entire tent and to hold the center poles in position lengthwise. Then the valleys or saddles are tightened to create the arch in the middle for drainage and stability. Finally, the guy lines on either side of the corners are pulled to complete the process.

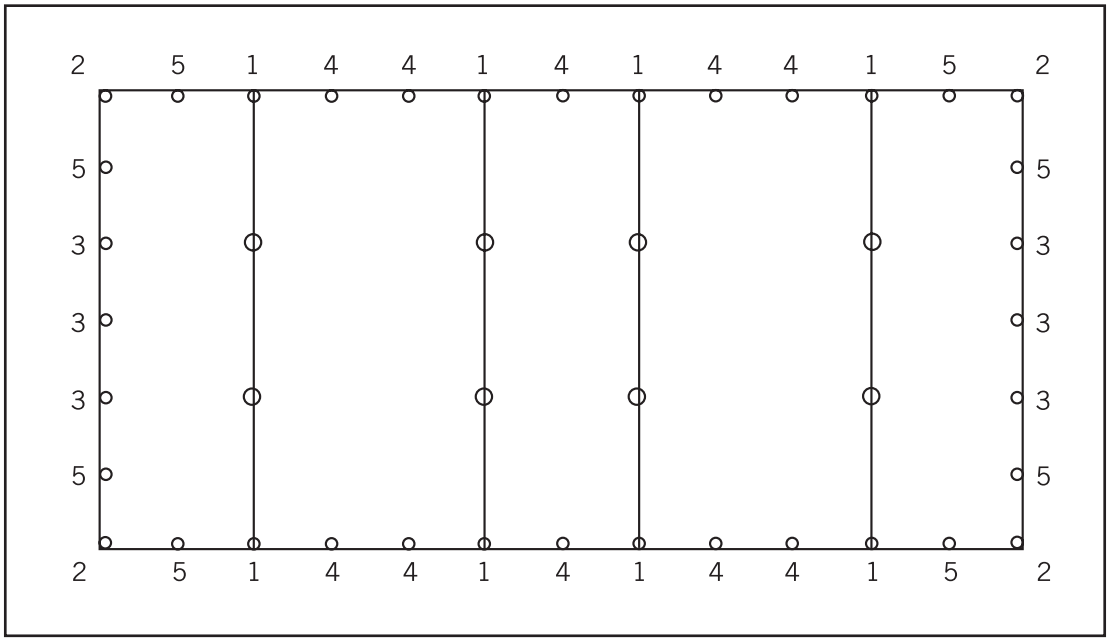

Figure 49. *Tensile Tensioning, Example 3*

In all of the examples above, over-tensioning can be detrimental to the shape and structural integrity of the tensile tent system. It should be noted that pulling too hard on either side of the corners could flatten the roof and contribute to ponding just above the corner position. That is why these points typically are done last so as to not flatten out the roof and allow for the collection of water. If the tent has been carefully and accurately pre-measured, applying tension until the side poles are vertical will put the tent in its optimum shape both aesthetically and structurally.

Safety considerations always are paramount. Since the designs for tensile structures put a lot of stress on the staking systems, it is vitally important to ensure that the staking is appropriate for the loads to be placed on the system. The pre-stress load, design load and the pull-out load must be taken into consideration when staking the tent and when applying tension to the skin.

These tents are demonstrably stronger than traditional pole-supported tents but a safe installation requires an understanding of how they work and why they are stronger. Insufficient staking and tensioning will create an unsafe tent installation that will not meet its design criteria. Additionally, if the tent is to be installed for a longer period of time, regular checks must be made to ensure proper tension exists to support the system as it was designed.

CHAPTER SIX: Safety and Maintenance

6

Under most weather conditions, a properly installed and maintained tent should remain safe until removal. However, certain external influences can alter the stability of a tensile structure. Precautions should be taken to ensure the safety of the tent and of the people using it.

The principal causes of tent failure can be natural or man-made. Weather or vandalism, for example, can jeopardize the security of a tent. Therefore, proper maintenance is required.

A tension structure, just like any other tent, must adhere to all local building and fire codes that pertain to its intended use.

INSPECTION HIGHLIGHTS

When inspecting an installation, particular areas of concern include:

1. Staking—Be sure all stakes are secure.

2. Tensioning—Be sure all guy lines are properly tensioned and all tent material set for proper drainage.

3. Poles—Determine that all poles are properly positioned, secured, and structurally sound.

4. Sidewalls—Be sure all sidewalls are secured properly as needed.

5. Safety—All safety on all inspections and maintenance issues should be addressed in a timely manner.

SPECIAL NOTES

A tent is not designed to carry the same wind and snow loads as a building; all parties must be aware of the tent's limitations. A tent rentor must retain the right to declare the tent unsafe for occupancy.

The manufacturer's instructions must be followed. Those instructions take precedence over any conflicting instructions that may be contained in this handbook. In the event of a conflict, follow the manufacturer's instructions and warnings.

 © 2004 IFAI Tent Rental Division

TENT

RENTAL DIVISION

OF THE INDUSTRIAL FABRICS ASSOCIATION INTERNATIONAL

THE IFAI PROCEDURAL HANDBOOK FOR THE SAFE INSTALLATION AND MAINTENANCE OF TENTAGE

Appendixes

An IFAI DIVISION

APPENDIX A: Staking Study

A

The Tent Rental Division is in the process of preparing a written summary of the Staking Study presented during the IFAI Tent Conference 2004. This summary will be forwarded to TRD members. Additional copies will be available for sale through the IFAI Bookstore. Visit www.bookstore.ifai.com for details.

 © 2004 IFAI Tent Rental Division

APPENDIX B: Building Code Sources

B

International Building Code
5203 Leesburg Pike, Ste. 600
Falls Church, VA 22041
www.intlcode.org

National Fire Protection Association (NFPA)
PO Box 9191
Quincy, MA 02269-9101
www.nfpa.org

American Society for Testing and Materials (ASTM)
100 Barr Harbor Dr.
West Conshohocken, PA 19428-2959
www.astm.org

National Association of State Fire Marshals (NASFM)
PO Box 8778
Albany, NY 122208
www.firemarshals.org

 © 2004 IFAI Tent Rental Division

TENT

RENTAL DIVISION

OF THE INDUSTRIAL FABRICS ASSOCIATION INTERNATIONAL

THE IFAI PROCEDURAL HANDBOOK FOR THE SAFE INSTALLATION AND MAINTENANCE OF TENTAGE

Glossary of Tent Terms

An IFAI DIVISION

GLOSSARY OF TENT TERMS

Apex
The highest point.

Auger Anchor
A generic name for a family of screw-like tent anchoring devices featuring a helical projection on the shaft that provides holding power. Also referred to as a *helical anchor* or *earth anchor*.

Bail-Ring Tent
A type of pole-supported tent where the fabric top is lifted to its peak and held in place at the top of a pre-erected center pole by means of ropes or cables and a metal ring, called a *bail ring*, attached to the center of the fabric top.

Base Plate
A device used at the base of a tent pole to facilitate rotating the pole up into position during the installation process. Also referred to as a *mud shoe* or *tabernacle*.

Base Scrim
A firm open-weave fabric used in the construction of laminated and coated materials.

Becket
Loops of rope laced through tent fabric sections to attach them together. Also known as *Dutch lacing*, *lace*, *lace loop* or *lace line*.

Block
A wooden or metal case enclosing one or more pulleys and having a hook, eye, or strap by which it may be attached. When used in conjunction with tackle, it provides a mechanical advantage that is effective in raising tents—part of the phrase *block and tackle*.

Box Beam Frame-Supported Tent
A type of tent where an assembled framework of box beams, I-beams, or truss arches supports the fabric roof and defines the shape of the structure. Also referred to as a *clear-span* or *free-span* tent.

Canopy
An architectural fabric projection that provides weather protection, identity, and/or decoration and is ground-supported in addition to being supported by the building to which it is attached. The term also can refer to a small tent, a tent without sidewalls, or an awning.

Canvas
A coarsely woven natural fabric, commonly used in treated form, for tent coverings. It is traditionally 100-percent cotton, but is often used as a generic term for any tent fabric, regardless of its make-up. Also referred to as *duck*.

Center Pole
One or more poles that lie on the longitudinal centerline of the tent and which are used to push the tent fabric up to its highest point, providing a watershed and occupiable space within the tent. Also called an *end mast*.

 © 2004 IFAI Tent Rental Division

Clear-Span Tent
See **Box Beam Frame-Supported Tent**.

Clove Hitch
A type of knot used for attachment of rope to pipe, piling or stake.

Cold Crack
The temperature at which vinyl becomes brittle.

Dead Load
The load on a structure produced by its own weight.

Deadman
A type of uplift anchor, normally buried in the ground (hence its name), which provides anchorage by a combination of its own weight and the weight of the soil captured above it.

Dressing Out
The final tensioning process after the tent has been raised.

Dutch Lacing
See **Becket**

Eave
The lower edge of the tent roof. Also referred to as the *rim* or *perimeter*.

Eave Belt
The reinforcement in the fabric at the tent eave.

Eave Guy
A rope, cable or chain attached from the tent eave to the ground-anchoring device, normally at the location of the side pole. Also referred to the *side guy*.

Egress
The planned avenue to leave the tent safely. Also referred to as the *exit*.

End Mast
See **Center Pole**.

Exit
See **Egress**.

Eyelet
See **Grommet**.

Flame Resistance
A measure of a material's property to resist or retard combustion.

Flange
A rib or rim for strength, for guiding, or for attaching tent poles together.

 © 2004 IFAI Tent Rental Division

Frame Jack
A portable mechanism for lifting or supporting a tent frame during the raising process.

Free-Span Tent
See **Box Beam Frame-Supported Tent**.

Gang Staking
A cluster or multiple stakes bound or attached together so as to function as a single unit.

Gore
A special cut, made on the edge of a strip of tent fabric, to produce the desired finished geometry of the surface. It is sometimes used to adjust fabric stress distribution.

Grommet
A ring or loop, usually metal or plastic, embedded into a piece of fabric to reinforce a hole. Also referred to as an *eyelet*.

Guy
A rope, cable, or other tie-down element that transfers loads from the tent to the anchoring system, such as stakes or augers embedded into the ground. Also referred to as *guy rope* or *guy line*. Types of guys include the *eave guy* or the *top guy*.

Guying Out
The process of tensioning the tent, while installing, by tightening and adjusting guy ropes.

Helical Anchor
See **Anchor**.

Hip
The line of the tent roof running from the top of the center pole down to the corner side pole.

Hip Band
The reinforcement of the tent fabric along the hip of the tent.

Hip Pole
A quarter pole located on the hip of the tent.

Hitch
Any one of a family of adjustable knots, such as a clove hitch, used to fasten a guy rope to a stake.

Hub Assembly
Peak intersection hardware assembly of a pipe frame tent.

IFAI
Industrial Fabrics Association International, a trade association for the industrial and technical fabrics industry, which has a Tent Rental Division dedicated to issues of concern to the tent industry.

Jump Rope
A device that fastens to the top of the tent pole to keep it from disconnecting from the tent.

 © 2004 IFAI Tent Rental Division

Kip
A unit of force equal to 1,000 pounds.

Lace
See **Becket**.

Lace Loop
See **Becket**.

Lace Line
See **Becket**.

Lacing Band
The reinforcement in the fabric at the edge of a tent section that is used to lace two sections together. Also referred to as the *seam*.

Leather-Eye
See **Pole Hole**.

Live Loads
The force imposed on a structure by its use, composed of the wind load, snow load, and earthquake load.

Manila
A general term used to describe rope or cordage made from natural manila hemp fiber.

Marquee
1) A canopy projecting over an entrance or doorway.
2) A connecting canopy between two tents.

Module
A standardized tent unit that can be added on to make a tent of any length.

Mud Shoe
See **Base Plate**.

NFPA
National Fire Protection Association, publishers of NFPA 102 and NFPA 701, which are fire codes governing the use of rental tents.

Occupant Load
The total number of people permitted to occupy a structure at any one time.

Pavilion
See **Tent**.

Perimeter
See **Eave**.

 © 2004 IFAI Tent Rental Division

Pin
The tip of a tent pole that allows it to slip through an eyelet in the tent fabric and holds the pole top in place.

Pipe Frame-Supported Tent
A tent with an assembled framework made of aluminum or steel pipes, tubes, or other extrusions that supports the fabric roof and defines the shape of the structure.

Pitch
The degree of slope in the tent roof, measured by the vertical distance between the tent eave and the peak height of the tent roof.

Pole Grommet
A reinforced ring fabricated into the tent fabric to accept a pole-pin assembly. Also referred to as a *leathered-eye*, *post hole* or *side pole hole*.

Pole-Supported Tent
A tent with a set of individual poles arranged beneath the fabric roof to support and define the shape of the structure. The fabric roof is tensioned over the poles and attached to ropes and/or cables at designated spots around the fabric's edge. The ropes and/or cables are anchored to the ground using stakes, augers, or weights around the perimeter of the tent. Also referred to as a *push-pole tent*.

Ponding
The accumulation of water on the tent top.

Purlin
A horizontal member in the roof of a structure that supports the rafters.

Push-Pole Tent
See **Pole-Supported Tent**.

Quarter Band
See **Storm Band**.

Quarter Pole
The poles intermediate between the center poles and side poles.

Ridge
The line defining the longitudinal axis of the tent roof. This line runs along the center locations at the highest point on the tent roof.

Ridge Band
The reinforcement of the tent roof along the ridge.

Rim
See **Eave**.

Rope
Strands of fiber braided or twisted together that are used to tie and secure tents. They are made from natural fibers or synthetic fibers such as polypropylene, polyethylene and nylon.

 © 2004 IFAI Tent Rental Division

Saddle
The low point in the curve of the fabric roof between center poles of a doublecurved tensile tent. Also referred to as a *swale*.

Safety Factor
A coefficient used to take into account such uncertainties as variations in material properties, weather, load experience, fabrication, construction tolerances, etc. It is a mandatory factor used in architectural design.

Seam
The location at which sections of tent fabric are laced together. *See also* **Becket**.

Section
A tent roof sub-assembly.

Side Guy
See **Eave Guy**.

Sidewall
Sections of fabric attached to the tent at the eave to give the tent walls, enclosing the interior space.

Sidewall Rope
Rope attached at the tent eave used to secure the sidewalls to the tent.

Side Poles
Poles that support the perimeter of the tent roof.

Snow Load
The weight of snow on the tent top.

Spider
A California frame tent—poles joined overhead resemble a spider.

Stake
A wooden or metal shaft driven into the ground as a tent anchoring device.

Stake Driver
A mechanical device used to put stakes into the ground.

Stake Puller
A mechanical device used to remove stakes from the ground.

Storm Band
The reinforcement of the tent fabric that connects the quarter poles and hip poles continuously around the tent. Also referred to as the *sweep band*, *quarter band*, or *wind band*.

Stress
Force per unit area.

Swale
See **Saddle**.

 © 2004 IFAI Tent Rental Division

Sweep Band
See **Storm Band**.

Tabernacle
See **Base Plate**.

Tackle
The arrangement of rope and associated devices used to lift or pull elements of the tent into position during the installation process—part of the phrase *block and tackle*. *See also* **Block**.

Temporary Structure
Any structure, such as a tent, which will be in place for less than 180 consecutive days. This definition may vary according to individual building codes.

Tensile Structure
A permanent fabric structure that relies on the tensioning of the fabric roof for its structural integrity and shape. Also referred to as a *tension structure* or *tensioned-membrane structure*.

Tensile Tent
A temporary fabric structure that shares some characteristics with the pole-supported tent, but relies more on the tensioning of the fabric roof for its structural integrity and shape. The use of tensioned fabric to resist applied loads and to shape the fabric membrane means less of a traditional support structure is needed to maintain it.

Tensioned Membrane Structure
See **Tensile Structure**.

Tent
A temporary structure composed of a covering made of a pliable membrane or fabric and supported by mechanical means such as poles, metal frames, beams, columns, arches, ropes and/or cables. Also referred to as a *marquee*, *canopy* or *pavilion*.

Tent Rental Division
A division of the Industrial Fabrics Association International dedicated to issues of concern to the tent rental industry.

3-4-5 Method
The method used to square (90 degree) a right angle triangle. The corner of a 3-4-5 triangle is:
A + B = C.

Top Guy
An external rope, cable or chain used to install and secure bail-ring tent center poles.

Webbing
A strong, narrow, closely-woven tape designed for bearing weight and used for straps, harnesses, tie-backs, tie-downs, etc., in the tent assembly.

Wind Band
See **Storm Band**.

Wind Load
The load exerted on a structure by wind.