CITY OF TAMPA

Bob Buckhorn, Mayor **CONTRACT ADMINISTRATION DEPARTMENT**

David L. Vaughn, AIA, Director

ADDENDUM NO. 1

DATE: April 21, 2014

Contract: 13-C-00055; Howard F. Curren AWTP Reclaimed Water Pumping Improvements

Bidders on the above referenced project are hereby notified that the following addendum is made to the Contract Documents. BIDS TO BE SUBMITTED SHALL CONFORM TO THIS NOTICE.

Item 1: The bid date is hereby changed to April 29, 2014.

Item 2: Replace the set of plans with the attached, updated set of plans.

Item 3: Attached for reference is the pre-bid meeting sign-in sheet.

All other provisions of the Contract Documents and Specifications not in conflict with this Addendum shall remain in full force and effect.

Questions are to be e-mailed to Contract Administration@tampagov.net.

Jim Greiner

Jim Greiner, P.E., Contract Management Supervisor

306 E. Jackson Street, 4N • Tampa, Florida 33602 • (813) 274-8456 • FAX: (813) 274-8080

TampaGov
www.tampagov.net

HOWARD F. CURREN AWTP RCW PUMP STATION IMPROVEMENTS (ATLAS K-13)

CITY OF TAMPA WATER DEPARTMENT
TAMPA, FLORIDA
CONTRACT 13-C-00055

SHEET INDEX	
1	COVER SHEET
2	GENERAL NOTES
3	SITE PLAN
4	EXISTING RECLAIMED PUMP STATION DEMOLITION
5	RECLAIMED PUMP STATION IMPROVEMENTS
6 & 7	MISCELLANEOUS DETAILS
E-1	LEGEND & ABBREVIATIONS
E-2	GENERAL NOTES
E-3	EXISTING ELECTRICAL ONE-LINE DIAGRAM / DEMOLITION PLAN
E-4	ELECTRICAL SITE PLAN
E-5	PUMP AREA CONDUIT ROUTING PLAN
E-6	FILTER BLDG. 2 ELECTRICAL EQUIPMENT LAYOUT
E-7	PROPOSED ELECTRICAL ONE-LINE DIAGRAM
E-8	ELECTRICAL ONE-LINE DIAGRAM
E-9	PUMP 1 AFD CONNECTION DIAGRAM
E-10	ELECTRICAL DETAILS
E-11	ELECTRICAL DETAILS
E-12	CONDUIT SCHEDULE

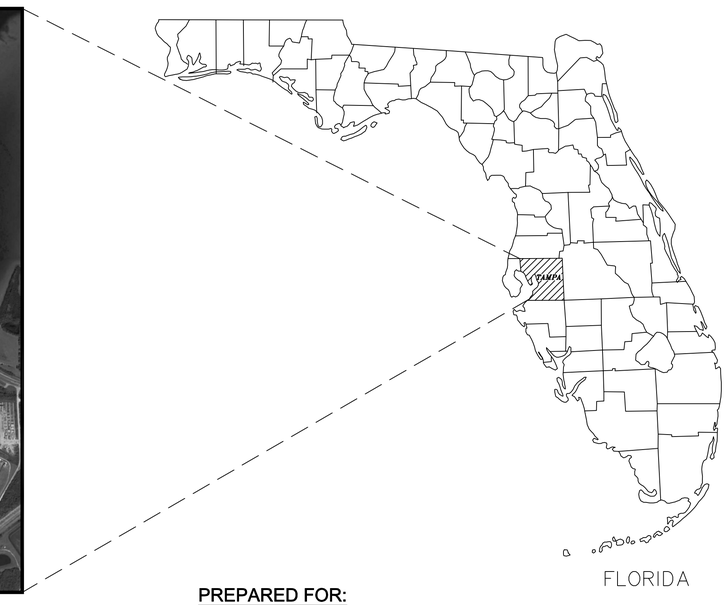

VICINITY MAP
N.T.S.

CALL 48 HOURS BEFORE YOU DIG... IT'S THE LAW!
Know what's below.
Call before you dig.
SUNSHINE STATE ONE CALL OF FLORIDA, INC.

PREPARED FOR:
CITY OF TAMPA WATER DEPARTMENT
CONTACT PERSON: ROY McKENZIE
306 E. JACKSON STREET
TAMPA, FL 33602
(813) 274-7104

PREPARED BY:
J&A ASSOCIATES ENGINEERS & MANAGERS, INC.
CONTACT PERSON: ASHLEY M. MIELE, PE
4900 MANATEE AVENUE WEST, SUITE 203
BRADENTON, FL 34209
(941) 254-7901

100% SUBMITTAL

cph — A Full Service A & E Firm
Architects, Engineers, Environmental, Landscape Architects, M / E / P, Planners, Surveyors, Traffic/Transportation
www.cphcorp.com
5601 Mariner Street Tampa, FL 33609
Phone: 813.288.0233
Licenses:
Eng. C.O.A. No. 3215 — Arch. Lic. No. AA2600926
Survey L.B. No. 7143 — Landscape Lic. No. LC0000298

J &A Associates
Engineers and Managers, Inc.
4900 Manatee Avenue West, Suite 203
Bradenton, FL , 34209
Phone 941-254-7901 Fax 941-254-7902

ASHLEY M. MIELE, P.E.
FL #66476

This document, together with the concepts and designs presented herein, as an instrument of service, is intended only for the specific purpose and client for which it was prepared. Reuse of and improper reliance on this document without written authorization and adaptation by J&A Associates shall be without liability to J&A Associates.
Drafted by CPH, Inc.; 813-288-0233, www.cph@cphcorp.com

GENERAL PROJECT DATA

1. FOR IDENTIFICATION OF CONTRACTUAL AGREEMENTS, THE ENGINEER PLANS SHALL BE DATED AS JANUARY 2014. ANY REVISIONS THEREAFTER WILL BE NOTED AND DATED ON THE AFFECTED DRAWING(S).

2. CONTRACTOR WILL BE RESPONSIBLE TO OBTAIN, MAINTAIN AND PAY FOR ANY PASSES OR PERMITS AS REQUIRED FOR CITY OF TAMPA PORT AUTHORITY.

3. ANY PUBLIC LAND CORNER, PROPERTY MONUMENTATION OR BENCH MARK WITHIN THE LIMITS OF CONSTRUCTION SHALL BE PROTECTED. IF A CORNER MONUMENT IS IN DANGER OF BEING DESTROYED, THE CONTRACTOR SHALL NOTIFY THE ENGINEER IMMEDIATELY.

4. THE CONTRACTOR SHALL CONTACT THE ENGINEER'S OFFICE IMMEDIATELY ON ANY CONFLICTS ARISING DURING CONSTRUCTION OF ANY IMPROVEMENTS SHOWN ON THESE DRAWINGS.

5. THE CONTRACTOR SHALL PROVIDE ALL DEWATERING NECESSARY TO KEEP EXCAVATIONS DRY.

6. LOCATIONS OF EXISTING UNDERGROUND UTILITIES ARE SHOWN BASED ON THE MOST RELIABLE INFORMATION AVAILABLE. VERIFY THE LOCATION AND DEPTH OF ALL PERTINENT UTILITIES PRIOR TO CONSTRUCTION BY CALLING SUNSHINE ONE-CALL (DIAL 811).

7. DISTURBANCE TO ANY PROPERTY SHALL BE RESTORED TO ORIGINAL OR BETTER CONDITION.

8. CONTRACTOR SHALL REPLACE ALL REMOVED OR DAMAGED SIDEWALK, SHRUBBERY, LANDSCAPING, IRRIGATION PIPES, VALVES AND COMPONENTS TO PRE-EXISTING CONDITIONS OR BETTER. GRASS SHALL BE REPLACED BY SODDING. CONCRETE DRIVEWAYS AND/OR SIDEWALKS REMOVED SHALL BE REPLACED IN FULL FROM CONSTRUCTION JOINT TO CONSTRUCTION JOINT. RESTORATION SHALL BE TO CITY STANDARDS.

9. EXISTING DIMENSIONS ARE BASED ON AS-BUILT DRAWINGS. TRUE DIMENSIONS SHALL BE DETERMINED IN THE FIELD PRIOR TO LAYOUT AND SHOP DRAWINGS SUBMITTAL.

10. CONTRACTOR SHALL MEET ALL REQUIREMENTS AS LISTED IN THE SPECIFIC PROVISIONS AND INDIVIDUAL SPECIFICATION SECTIONS INCLUDED IN THE CONTRACT DOCUMENTS. PAVEMENT RESTORATION SHALL CONSIST OF 12" CRUSHED CONCRETE, 1-3/4" SUPERPAVE 12.5 ASPHALT AS SHOWN ON TYPICAL PAVEMENT SECTION DETAIL SHEET 7. BACKFILL AND SUBGRADE SHALL BE COMPACTED IN 12" LIFTS TO 98% OF MDD AS DETERMINED BY AASHTO T-180

PROJECT DESCRIPTION

1. THE PROJECT CONSISTS OF REPLACING THE EXISTING PUMP NO. 1 WITH A PUMP EQUIVALENT TO PUMPS NO. 2 - NO. 4. THE CONTRACTOR SHALL BE RESPONSIBLE FOR ALL DEMOLITION OF EXISTING PUMP AND PIPE HEADER. ALL SALVAGEABLE MATERIALS SHALL BE HANDED OVER TO THE CITY. CONTRACTOR SHALL PERFORM PIPING MODIFICATIONS FOR INSTALLATION OF PROPOSED PUMP AS IDENTIFIED ON THE PLANS, ICLUDING VALVES, FITTINGS, FLOW METER, INSTRUMENTATION, ELECTRICAL, CONTROLS AND ALL REQUIRED APPURTENANCES TO PROVIDE A FULLY OPERATIONAL SYSTEM. PROJECT INTENT IS FOR NEW PIPE AND PUMP AND CONFIGURATION (EXCEPT FOR THE HEADER PIPE) TO MATCH EXISITNG PUMPS #2 - #4.

2. PLANS FOR THIS PROJECT ARE BASED ON AS-BUILTS OF THE ORIGINAL PUMP STATION CONSTRUCTION. CONTRACTOR SHALL BE RESPONSIBLE FOR VERIFYING EXISTNG SITE CONDITIONS.

3. CONTRACTOR SHALL PROVIDE AND INSTALL AN 18-PULSE ADJUSTABLE FREQUENCY DRIVE (AFD), COMPLETE WITH THE NECESSARY POWER DISTRIBUTION AND CONTROLS, AS SHOWN IN THE DRAWINGS AND DESCRIBED IN THE SPECIFICATIONS, TO OPERATE THE NEW RECLAIMED WATER PUMP. POWER DISTRIBUTION TO THE AFD SHALL INCLUDE, BUT NOT BE LIMITED TO, PROVIDING AND INSTALLING A NEW CIRCUIT BREAKER IN THE EXISTING SWITCHGEAR AND PROVIDING AND INSTALLING A NEW MOTOR CONTROL CENTER (MCC). THE MCC WILL BE INSTALLED WITH ALL THE NECESSARY CONDUIT AND WIRING TO PROVIDE POWER DISTRIBUTION TO THE NEW AFD AND THE THREE (3) EXISTING AFD'S, AS SHOWN IN THE DRAWINGS AND DESCRIBED IN THE SPECIFICATIONS.

EXISTING UTILITY LOCATION

1. THE LOCATIONS OF ALL EXISTING UNDERGROUND PIPES AND CONDUITS SHOWN ON PLANS HAVE BEEN DETERMINED FROM THE BEST INFORMATION AVAILABLE. PRIOR TO THE START OF ANY CONSTRUCTION ACTIVITY, VERIFY THE LOCATION AND DEPTH OF ALL PERTINENT UTILITIES. NOTIFY UTILITY COMPANIES AT LEAST 48 HOURS BEFORE BEGINNING CONSTRUCTION BY CALLING SUNSHINE ONE-CALL (DIAL 811). THE CONTRACTOR SHALL EXERCISE CAUTION WHEN CROSSING AN UNDERGROUND UTILITY, WHETHER SHOWN ON THE PLANS OR LOCATED BY THE CONTRACTOR.

2. THE PIPE LENGTHS ARE APPROXIMATE ONLY. THE CONTRACTOR SHALL PERFORM AN INDEPENDENT TAKE OFF AND SHALL BASE THE BID ON THAT TAKE OFF.

AS-BUILTS

1. AS-BUILTS SHALL BE PROVIDED BY THE CONTRACTOR TO THE CITY OF TAMPA'S PROJECT REPRESENTATIVE TWO WEEKS PRIOR TO FINAL INSPECTION. SEE PROJECT SPECIFICATIONS FOR ADDITIONAL AS-BUILT REQUIREMENTS.

NOTICE OF APPLICABILITY

1. WHEREVER STATE, COUNTY, CITY OR LOCAL STANDARD SPECIFICATIONS DIFFER FROM THOSE CONTAINED HEREIN, THE CONTRACTOR SHALL NOTIFY THE ENGINEER AND CITY FOR CLARIFICATION, TYPICALLY THE MORE STRINGENT SHALL GOVERN.

TRAFFIC CONTROL

1. THE CONTRACTOR SHALL MAINTAIN UNINTERRUPTED VEHICLE ACCESS FOR PLANT OPERATIONS AND PLANT SUPPLIERS. THE CONTRACTOR SHALL COORDINATE WITH THE CITY AND SHALL SCHEDULE ALL WORK TO FACILITATE CONTINUOUS UNINTERRUPTED PLANT OPERATIONS.

UTILITY GENERAL NOTES

1. THE CONTRACTOR IS RESPONSIBLE FOR ALL COSTS INCURRED FOR THE PROTECTION OF EXISTING FACILITIES DURING CONSTRUCTION.

2. THE CONTRACTOR IS RESPONSIBLE TO MAINTAIN IN SERVICE ALL EXISTING PIPING ENCOUNTERED DURING CONSTRUCTION UNLESS OTHERWISE INDICATED IN THE DRAWINGS.

3. FOR THE CONSTRUCTION REQUIRED, THE CONTRACTOR SHALL FIELD VERIFY THE LOCATION, DEPTH, AND ALIGNMENT OF ALL EXISTING PIPES AND CONDUITS, TO BE CROSSED OR CONNECTED TO. IF THE CONTRACTOR DEEMS NECESSARY (A.) A CHANGE IN ALIGNMENT OR DEPTH, OR THE NEED FOR ADDITIONAL FITTINGS, BENDS OR COUPLINGS, WHICH REPRESENT A DEPARTURE FROM THE CONTRACT DRAWINGS, OR (B.) A NEED FOR RELOCATION OF EXISTING UTILITIES, THEN DETAILS OF SUCH DEPARTURES, RELOCATIONS, OR ADDITIONAL REASONS THEREFORE SHALL BE SUBMITTED WITH SHOP DRAWINGS. APPROVED DEPARTURES FOR THE CONTRACTORS CONVENIENCE ONLY SHALL BE MADE AT NO ADDITIONAL COST TO THE CITY.

4. PROPOSED UTILITIES SHALL HAVE A 3'-0" MINIMUM DEPTH OF COVER UNLESS INDICATED ON THE PLANS OR DIRECTED BY THE ENGINEER.

5. THE CONTRACTOR SHALL BE RESPONSIBLE FOR ANY DAMAGE TO EXISTING UTILITIES CAUSED BY CONSTRUCTION OPERATIONS.

6. EROSION AND SEDIMENT CONTROL DEVICES SHALL REMAIN IN PLACE AND SHALL NOT BE REMOVED UNTIL FINAL GRADING AND RESTORATION OF THE SITE HAS BEEN COMPLETED.

7. TYPICAL DETAILS AND PROPOSED CONSTRUCTION AS SHOWN ILLUSTRATE THE ENGINEERS' INTENT AND ARE NOT PRESENTED AS A SOLUTION TO ALL CONSTRUCTION PROBLEMS ENCOUNTERED IN THE FIELD.

OWNER/OPERATOR

1. THE ENTITY THAT WILL OWN, OPERATE AND MAINTAIN THE SYSTEM SHOWN ON THESE PLANS IS THE CITY OF TAMPA WASTEWATER DEPARTMENT. THE CONTRACTOR SHALL BE EXPECTED TO COORDINATE WITH AND MEET ALL THE REQUIREMENTS OF THE ENTITY.

MATERIALS

1. MATERIALS SHALL BE NEW UNLESS OTHERWISE NOTED IN SPECIFICATIONS AND PLANS.

2. SHOP DRAWINGS SHALL BE SUBMITTED FOR ALL PROPOSED NEW ITEMS. SHOP DRAWINGS, BOTH HARD COPIES OR ELECTRONIC IN PDF FORMAT, SHALL BE HIGH QUALITY AND EASILY READABLE.

GENERAL

1. ALL PUMPING PIPE AND FITTINGS SHALL BE DUCTILE IRON.

2. ALL DUCTILE IRON PIPE SHALL MEET THE REQUIREMENTS OF AWWA C151, BE PC 250 AND FULLY GAUGED COATINGS AND LININGS FOR DUCTILE IRON PIPE AND FITTINGS SHALL CONFORM TO THE SUBSECTION HEADED "COATINGS AND LININGS," CONTAINED HEREIN.

3. ALL NEW RECLAIMED WATER MAINS SHALL BE PRESSURE TESTED AND FLUSHED PER SPECIFICATIONS PRIOR TO CONNECTING INTO EXISTING MAIN LINE.

4. ALL RECLAIMED WATER MAINS 4" AND LARGER SHALL BE DUCTILE IRON PIPE EXCEPT WHERE NOTED TO BE STEEL PIPE. ALL FLANGE CONNECTIONS BOLTS, NUTS, AND WASHERS SHALL BE TYPE 316 STAINLESS STEEL.

5. THE EXISTING RECLAIMED WATER PUMP STATION SHALL REMAIN OPERATIONAL WITH MINIMAL DOWNTIME TO INSTALL THE NEW RECLAIMED WATER PUMP, REFER TO SEQUENCING OF CONSTRUCTION.

SEQUENCE OF CONSTRUCTION

1. CONSTRUCTION OPERATIONS MUST ALLOW FOR THE CONTINUOUS OPERATION OF THE FACILITY, EXCEPT AS ALLOWED IN "SEQUENCING" BELOW. CONTRACTOR SHALL PREPARE A PROPOSED SEQUENCE OF CONSTRUCTION ACTIVITIES FOR REVIEW AND APPROVAL BY THE OWNER/OPERATOR PRIOR TO COMMENCING ANY CONSTRUCTION ACTIVITIES ON SITE.

SEQUENCING

1. CONTRACTOR SHALL COORDINATE WITH THE CITY AT LEAST 4-WEEKS IN ADVANCE TO BRING THE SYSTEM DOWN TO REMOVE PORTIONS OF THE PUMP HEADER ASSOCIATED WITH INSTALLING THE NEW 30"x16" REDUCER AND 16" BUTTERFLY VALVE. CONTRACTOR SHALL ONLY REMOVE PORTIONS OF HEADER THAT WILL ALLOW FOR DOWNTIME OF THE INITIAL INSTALLATION OF THE 30"x16" REDUCER AND 16" BUTTERFLY VALVE.

2. CONTRACTOR SHALL DEMOLISH ALL REMAINING PORTIONS OF THE PUMP HEADER AND REMOVE EXISTING PUMP NO. 1, KEEPING THE EXISTING RECLAIMED PUMPS IN OPERATION.

3. CONTRACTOR SHALL INSTALL PROPOSED PUMP NO. 1 AND TEST FOR A MINIMUM OF 48-HOURS FOR APPROVED BY CITY STAFF.

FLANGED PIPE

1. FLANGED PIPE SHALL CONFORM TO THE REQUIREMENTS OF AWWA C115. FLANGES SHALL BE DUCTILE IRON AND SHALL HAVE LONG HUBS. THERE SHALL BE NO LEAKAGE THROUGH THE PIPE THREADS, AND THE FLANGES SHALL BE DESIGNED TO PREVENT CORROSION OF THE THREADS FROM OUTSIDE.

FITTINGS

1. FITTINGS SHALL BE STD. CLASS 125 FLANGED FITTINGS MANUFACTURED IN ACCORDANCE WITH AWWA C-110 AND NAPF 200 LATEST REVISION

FLANGED JOINTS

1. FLANGED JOINTS SHALL MEET THE REQUIREMENTS OF ANSI SPECIFICATION B16.1. FLANGES, FLANGE FACING DRILLING, AND PROTECTING SHALL BE AS SPECIFIED FOR FLANGED PIPE.

2. EXCEPT WHERE OTHERWISE DIRECTED BY THE ENGINEER, GASKETS FOR FLANGED JOINTS SHALL BE OF THE FULL-FACE TYPE, MEETING THE REQUIREMENTS OF ANSI B16.21. GASKETS SHALL BE RUBBER WITH CLOTH INSERTION, AS MADE BY THE CRANE COMPANY, GARLOCK PACKING COMPANY, U.S. RUBBER COMPANY, OR EQUAL.

COATINGS AND LININGS

1. UNLESS OTHERWISE SHOWN ON THE PLANS OR SPECIFIED, ALL DUCTILE IRON PIPE AND FITTINGS SHALL HAVE A CEMENT-MORTAR LINING MEETING THE REQUIREMENTS OF AWWA C151-8.2.

2. CONTRACTOR SHALL PAINT EXTERIOR SURFACES OF ALL ABOVEGROUND RCW PUMPING PIPES AND APPURTENANCES IN ACCORDANCE WITH SPECIFICATIONS W-36 "COATINGS". PAINT COLOR SHALL BE PANTONE PURPLE.

cph
A Full Service A & E Firm
Architects M / E / P
Engineers Planners
Environmental Surveyors
www.cphcorp.com Landscape Architects Traffic/Transportation
5601 Mariner Street Tampa, FL 33609
Phone: 813.288.0233
Licenses:
Eng. C.O.A. No. 3215 Arch. Lic. No. AA2600926
Survey L.B. No. 7143 Landscape Lic. No. LC0000298

J &A Associates
Engineers and Managers, Inc.
4900 Manatee Avenue West, Suite 203
Bradenton, FL , 34209
Phone 941-254-7901 Fax 941-254-7902

© 2014 J&A ASSOCIATES ENGINEERS AND MANAGERS, INC.

NO.	REVISIONS	DATE	BY

SCALE: AS SHOWN
DESIGNED BY: WWW
DRAWN BY: GCM
CHECKED BY: SWK
DATE:
PROFESSIONAL ENGINEER:
ASHLEY M. MIELE, PE
LICENSE NUMBER: 66476

Howard F. Current AWTP
Reclaimed Water Pump
Station Improvements
(Atlas K-13)

GENERAL NOTES

DATE 01/13/2014
PROJECT NUMBER JA13-08AWC
SHEET NUMBER 2

This document, together with the concepts and designs presented herein, as an instrument of service, is intended only for the specific purpose and client for which it was prepared. Reuse of and improper reliance on this document without written authorization and adaptation by J&A Associates shall be without liability to J&A Associates.
Drafted by Charles Bailey, Creative CAD Source, 941.876.3004, www.creativecadsource.com

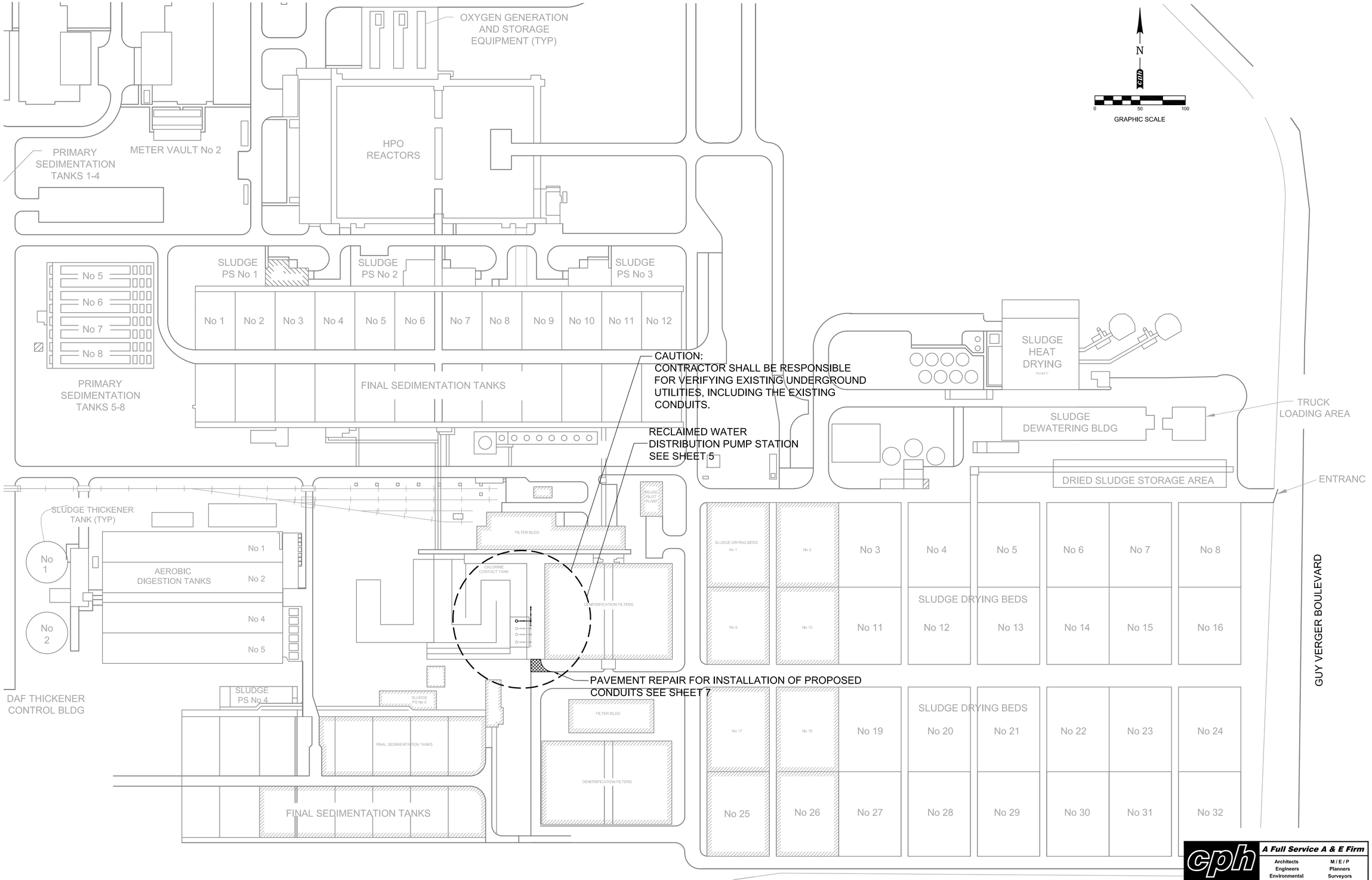

SITE PLAN

J & A Associates
Engineers and Managers, Inc.
4900 Manatee Avenue West, Suite 203
Bradenton, FL, 34209
Phone 941-254-7901 Fax 941-254-7902

© 2014 J&A ASSOCIATES ENGINEERS AND MANAGERS, INC.

NO.	REVISIONS	DATE	BY

PROFESSIONAL ENGINEER:
ASHLEY M. MELLE, PE
LICENSE NUMBER: 66476
DATE:

SCALE: AS SHOWN
DESIGNED BY: WWW
DRAWN BY: GCM
CHECKED BY: SWR

Howard F. Current AWTP Reclaimed Water Pump Station Improvements (Atlas K-13)

SITE PLAN

DATE 01/13/2014
PROJECT NUMBER JA13-08AWC
SHEET NUMBER 3

cph
A Full Service A & E Firm
Architects M / E / P
Engineers Planners
Environmental Surveyors
www.cphcorp.com Landscape Architects Traffic/Transportation
5601 Mariner Street Tampa, FL 33609
Phone: 813.288.0233
Licenses:
Eng. C.O.A. No. 3215 Arch. Lic. No. AA2600926
Survey L.B. No. 7143 Landscape Lic. No. LC0000298

This document, together with the concepts and designs presented herein, as an instrument of service, is intended only for the specific purpose and client for which it was prepared. Reuse of and improper reliance on this document without written authorization and adaptation by J&A Associates shall be without liability to J&A Associates.
Drafted by Charles Bailey, Creative CAD Source, 941.876.3004, www.creativecadsource.com

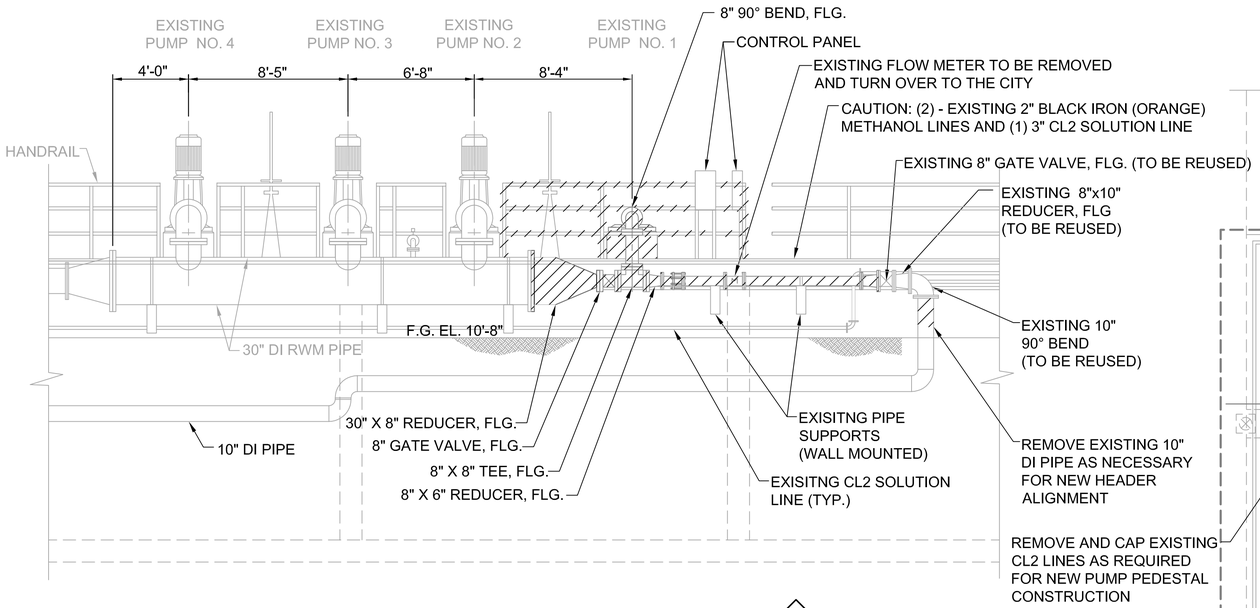

EXISTING PUMP 1 REMOVAL SECTION

SCALE: 1/4" = 1'- 0"

A 4 4

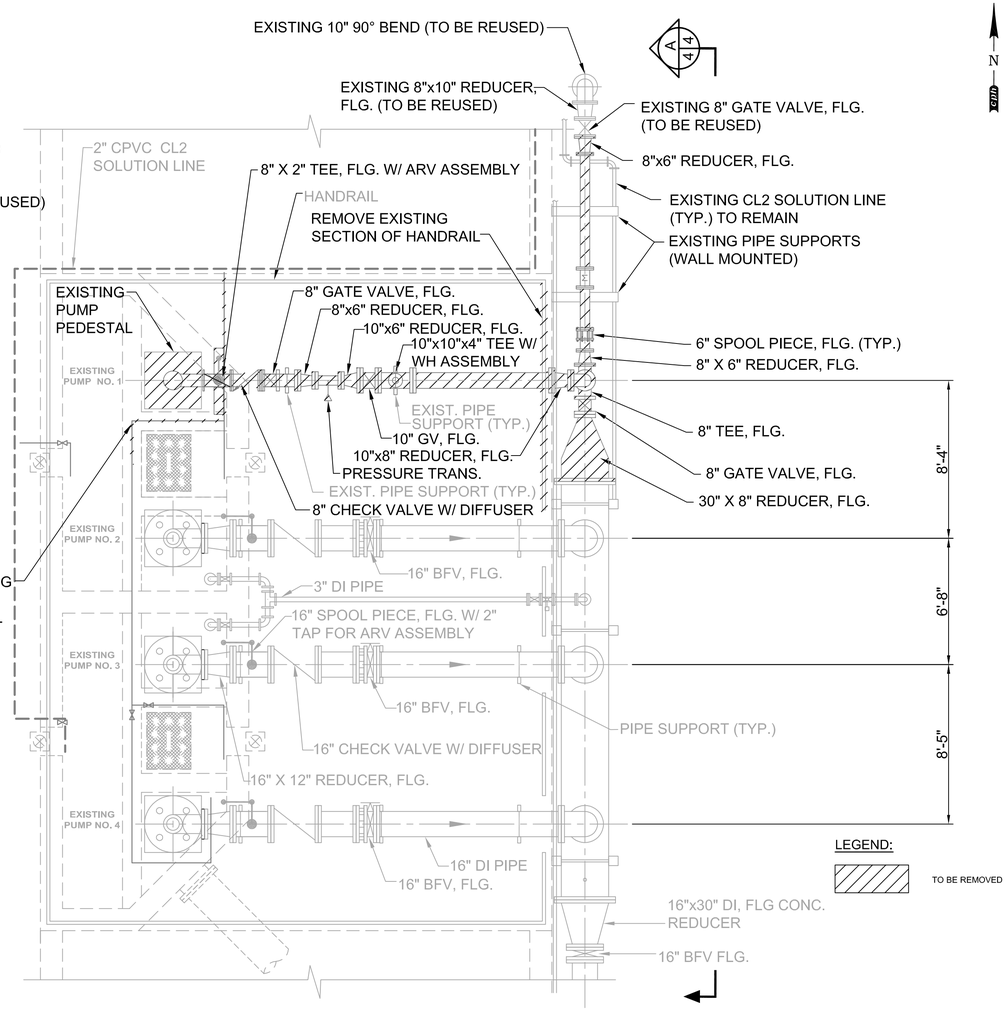

EXISTING PUMP AND PIPING PLAN

SCALE: 1/4" = 1'- 0"

EAST ELEVATION (FACING SW)

DEMOLITION NOTES

1. CONTRACTOR TO COORDINATE ALL PIPE AND CONDUIT LOCATIONS WITH MECHANICAL AND ELECTRICAL DRAWINGS PRIOR TO ANY DEMOLITION.
2. CONTRACTOR SHALL TAKE THE NECESSARY PRECAUTIONS TO PREVENT DAMAGE TO EXISTING STRUCTURES, AND EQUIPMENT NOT TO BE REMOVED. ALL DAMAGED EXISTING EQUIPMENT, SHALL BE REPLACED, REPAIRED TO NEW OR EXISTING CONDITION.
3. EXTREME CAUTION MUST BE TAKEN ON ANY EXCAVATION OF PIPE, IF NECESSARY IN THE IMMEDIATE FRONT ROADWAY SIDE OF PUMP STATION AS TO NOT DISTURB 2-2" EXISTING METHANOL PIPES. IF EXCAVATION IS REQUIRED IT IS THE CONTRACTORS RESPONSIBILITY TO LOCATE AND COORDINATE WITH ENGINEER PRIOR TO ANY EXCAVATION.
4. THE DISPOSITION OF ALL REMOVED PIPE/ EQUIPMENT SHALL BE THE RESPONSIBILITY OF THE CONTRACTOR.
5. DEMOLITION SHALL NOT PROCEED UNTIL ALL CONNECTING WORK (PIPING/ ELECTRICAL) IS COMPLETE AND ALL PUMPS/ VALVES ARE ON-SITE IN ORDER TO MINIMIZE DOWN TIME OF REUSE WATER PUMPS TO MCKAY BAY INCINERATOR FACILITY.

DEMOLITION NOTES CONTINUED

6. CONTRACTOR SHALL REMOVE PUMP, PIPE, FITTINGS, AND SUPPORTS AS NECESSARY TO INSTALL PROPOSED IMPROVEMENTS.
7. SEE GENERAL NOTES ON SHEET 2 AND SPECIAL PROVISIONS SP-17 REGARDING DEMOLITION SEQUENCE.

cph
A Full Service A & E Firm
www.cphcorp.com
Architects Engineers Environmental Landscape Architects
M / E / P Planners Surveyors Traffic/Transportation
5601 Mariner Street Tampa, FL 33609
Phone: 813.288.0233
Licenses:
Eng. C.O.A. No. 3215 Arch. Lic. No. AA2600926
Survey L.B. No. 7143 Landscape Lic. No. LC0000298

J &A Associates
Engineers and Managers, Inc.
4900 Manatee Avenue West, Suite 203
Bradenton, FL , 34209
Phone 941-254-7901 Fax 941-254-7902
© 2014 J&A ASSOCIATES ENGINEERS AND MANAGERS, INC.

NO.	REVISIONS	DATE	BY

PROFESSIONAL ENGINEER:
ASHLEY M. MIELE, PE
LICENSE NUMBER: 66476
DATE:

SCALE: AS SHOWN
DESIGNED BY: WWW
DRAWN BY: GCM
CHECKED BY: SWR

Howard F. Current AWTP Reclaimed Water Pump Station Improvements (Atlas K-13)

EXISTING RECLAIMED PUMP STATION DEMOLITION

DATE 01/13/2014
PROJECT NUMBER JA13-08AWC
SHEET NUMBER 4

This document, together with the concepts and designs presented herein, as an instrument of service, is intended only for the specific purpose and client for which it was prepared. Reuse of and improper reliance on this document without written authorization and adaptation by J&A Associates shall be without liability to J&A Associates.
Drafted by Charles Bailey, Creative CAD Source, 941.876.3004, www.creativecadsource.com

PUMP PIPING LEGEND

- (A) NEW VERTICAL TURBINE PUMP , (SEE PUMP SPECIFICATION, THIS SHEET)
- (B) 16" x 12" REDUCER, FLG.
- (C) 16" DIP SPOOL PIECE DIRECT TAPPED FOR 2" SS PIPE (2" SS BALL VALVE AND 2" AIR RELEASE VALVE SIPHON BREAK APCO SERIES 144 DAT OR APPROVED EQUAL)
- (D) 16" SLANTING DISC CHECK VALVE WITH DASHPOT - APCO SERIES 800T, WITH HYDRAULIC OPERATORS
- (E) 16" FULLY GAUGED D.I. SPOOL PIECE, FLG. x P.E., LENGTH AS REQUIRED
- (F) 16" FLANGED COUPLING ADAPTER
- (G) 16" BUTTERFLY VALVE, FLG. WITH HANDWHEEL
- (H) 16" D.I. SPOOL PIECE, FLG. x FLG., LENGTH AS REQUIRED
- (I) 30" x 16" REDUCER, FLG.
- (J) 16" 90° BEND, FLG.
- (K) 16" TEE, FLG.
- (L) 16" x 8" ECCENTRIC REDUCER, FLG.
- (M) 8" FULLY GAUGED D.I. SPOOL PIECE, FLG. x FLG., LENGTH AS REQUIRED
- (N) 8" ABB "WATER MASTER" FLOW METER, FLG. (METER TO MCKAY BAY INCINERATOR SEE SHEET E-5 AND E-11 FOR INSTALLATION DETAILS)
- (O) 10" FLANGED COUPLING ADAPTER, FLG. x P.E.
- (P) 2" STAINLESS STEEL SPOOL , LENGTH AS REQUIRED
- (Q) 2" 90° BEND,SS

NOTES:

1. THE CONTRACTOR IS TO COORDINATE ALL PIPE AND CONDUIT LOCATIONS WITH ELECTRICAL DRAWINGS PRIOR TO PLACING CONCRETE. CONTRACTOR SHALL PROVIDE SHOP DRAWINGS FOR EQUIPMENT AND ANCHOR BOLT LOCATIONS.
2. DRAWINGS SHALL BE WORKED TOGETHER WITH ELECTRICAL DRAWINGS TO PROPERLY LOCATE WALL PIPES, PIPE SLEEVES, ANCHOR BOLTS, BLOCKOUTS, ETC. DISCREPANCIES SHALL BE BROUGHT TO THE ATTENTION OF THE ENGINEER BEFORE PROCEEDING WITH THE WORK.
3. CONTRACTOR SHALL RELOCATE CONDUITS AS NECESSARY FOR PIPE SUPPORT INSTALLATION.

PUMP SPECIFICATION

PUMP REQUIRED	ONE
MFGR. & MODEL NO. :	VERTICAL PUMP FLOWSERVE
MODEL NO. :	14ENH
PUMP SIZE	SUCTION, 12" FLANGE DISCHARGE
PUMP CAPACITY	3000 GPM,
TOTAL HEAD	208 FT,
IMPELLER SIZE OR NO.	11.12" TRIM
MOTOR REQUIREMENTS	200 HP. 460 VOLT, 3 PHASE
SPEED	VARIABLE SPEED - MAX SPEED 1775 RPM
ELECTRICAL SERVICE	480 VOLTS, 3 PHASE, 60 HERTZ

CONTRACTOR SHALL RELOCATE CONDUITS FOR THE INSTALLATION OF PROPOSED PIPE SUPORTS

PHOTO - 1

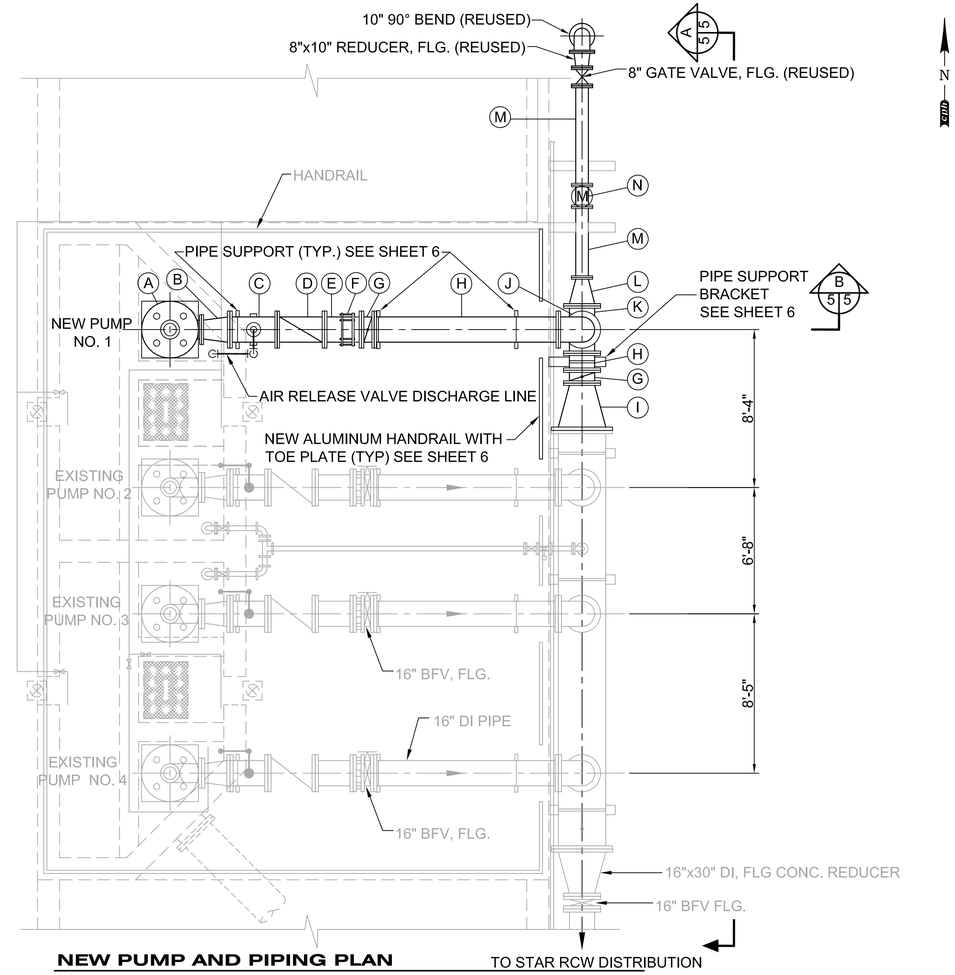

NEW PUMP AND PIPING PLAN
SCALE: 1/4" = 1'- 0"

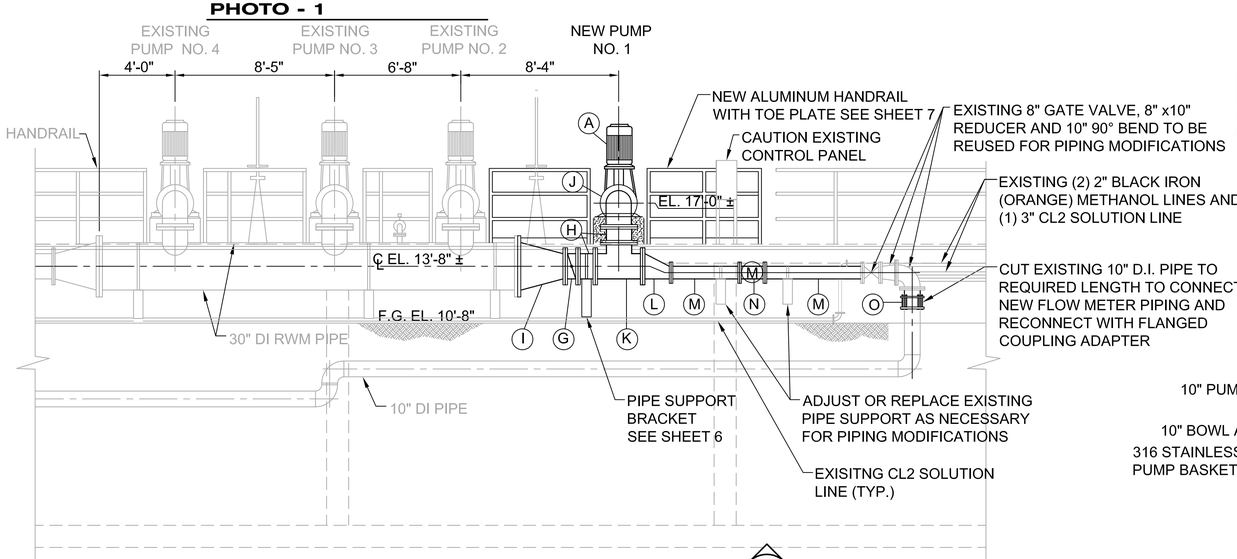

NEW PUMP AND PIPING SECTION
SCALE: 1/4" = 1'- 0"
A 5 5

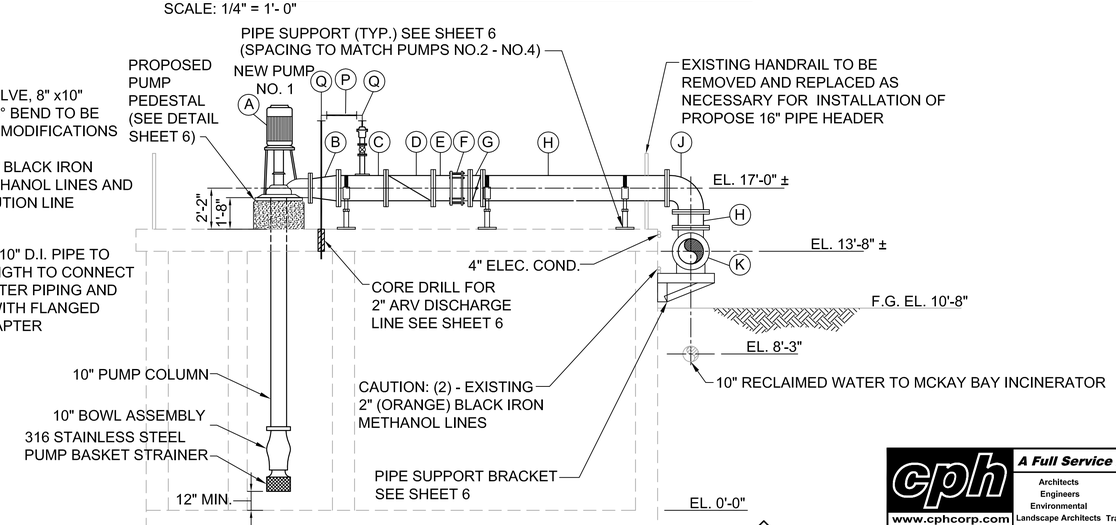

NEW PUMP AND PIPING SECTION
SCALE: 1/4" = 1'- 0"
B 5 5

J &A Associates
Engineers and Managers, Inc.
4900 Manatee Avenue West, Suite 203
Bradenton, FL , 34209
Phone 941-254-7901 Fax 941-254-7902

© 2014 J&A ASSOCIATES ENGINEERS AND MANAGERS, INC.

NO.	REVISIONS	DATE	BY

PROFESSIONAL ENGINEER:
ASHLEY M. MIELE, PE
LICENSE NUMBER: 66476
DATE:

SCALE: AS SHOWN
DESIGNED BY: WWW
DRAWN BY: CCM
CHECKED BY: SWR

Howard F. Current AWTP
Reclaimed Water Pump
Station Improvements
(Atlas K-13)

RECLAIMED PUMP STATION IMPROVEMENTS

DATE 01/13/2014
PROJECT NUMBER JA13-08AWC
SHEET NUMBER 5

cph
A Full Service A & E Firm
Architects Engineers Environmental
M / E / P Planners Surveyors
Landscape Architects Traffic/Transportation
www.cphcorp.com
5601 Mariner Street Tampa, FL 33609
Phone: 813.288.0233
Licenses:
Eng. C.O.A. No. 3215 Arch. Lic. No. AA2600926
Survey L.B. No. 7143 Landscape Lic. No. LC0000298

This document, together with the concepts and designs presented herein, as an instrument of service, is intended only for the specific purpose and client for which it was prepared. Reuse of and improper reliance on this document without written authorization and adaptation by J&A Associates shall be without liability to J&A Associates.
Drafted by Charles Bailey, Creative CAD Source, 941.876.3004, www.creativecadsource.com

GENERAL NOTES

1. CONTRACTOR SHALL VERIFY ALL EXISTING ELEVATION AND DIMENSIONS OF EXISTING STRUCTURES PRIOR TO SUBMITTAL OF FABRICATION OF SHOP DRAWINGS.

2. CONTRACTOR TO COORDINATE ALL PIPE AND CONDUIT LOCATIONS WITH MECHANICAL DRAWINGS PRIOR TO PLACING CONCRETE. CONTRACTOR SHALL PROVIDE SHOP DRAWINGS FOR EQUIPMENT AND ANCHOR BOLT LOCATIONS.

3. CLEARANCE OF REINFORCING STEEL FROM THE FACE OF CONCRETE TO THE OUTERMOST TIE/BAR SHALL BE 2-INCHES, UNLESS OTHERWISE NOTED ON THE DRAWINGS.

4. ANCHOR BOLTS SHALL BE TYPE TYPE 316 STAINLESS STEEL UNLESS OTHERWISE NOTED ON DRAWINGS.

EXPANSION ANCHORS

1. EXPANSION BOLTS SHALL BE 316 STAINLESS STEEL HILTI KWK BOLT II, OR APPROVED EQUAL. BOLTS SHALL HAVE THE FOLLOWING MINIMUM ALLOWABLE LOAD CAPACITIES (CONCRETE FC = 4000 PSI)

A. 3/4" DIA. BOLTS WITH 4 ¾" MINIMUM EMBEDMENT:

TENSION = 3, 870 LBS
SHEAR = 4,800 LBS

B. 1" DIA. BOLTS WITH 6" MINIMUM EMBEDMENT:

TENSION = 7,200 LBS
SHEAR = 7,470 LBS

C. 5/8" STAINLESS STEEL WEDGE ANCHOR

2. CAST IN PLACE CONCRETE SHALL HAVE A MINIMUM COMPRESSIVE STRENGTH OF 4, 000 PSI AT 28 DAYS.

3. THE FOLLOWING SHOP DRAWINGS SHALL BE SUBMITTED FOR REVIEW. FABRICATION SHALL NOT COMMENCE UNTIL ALL REVIEWS ARE COMPLETED.

- REINFORCING STEEL
- STRUCTURE STEEL
- CONCRETE MIX DESIGNS
- GROUT
- ANCHOR BOLTS
- EXPANSION ANCHORS
- PIPE SADDLE
- PIPE CLAMPS

NOTE:

1. HOT-DIP GALVANIZE SADDLE , LOCKNUT NIPPLE, REDUCER, AND PIPE WITH BASE SEPARATELY AFTER FABRICATION.

2. SEE PLANS AND SECTIONS FOR PIPE GRADE REQUIREMENT.

3. ANCHOR BOLTS SHALL BE SS WITH A MINIMUM OF 6" EMBEDMENT.

PIPE SIZE	A	B	C	D	E	
					MIN	MAX
2 1/2	2 1/2	3 1/2	7	1 1/2	8	13
3	2 1/2	3 3/4	7	1 1/2	8 1/4	13 1/4
3 1/2	2 1/2	4	7	1 1/2	8 1/2	13 1/2
4	3	4 1/4	7	2 1/2	9 1/4	14
5	3	4 7/8	7	2 1/2	10	14 3/4
6	3	5 1/2	7	2 1/2	10 1/2	15 1/4
8	3	6 7/8	7	2 1/2	11 3/4	16 1/2
10	3	8 1/2	7	2 1/2	13 1/2	18 1/4
12	3	9 15/16	7	2 1/2	15	19 3/4
14	4	10 15/16	7	3	16 1/4	20 3/4
16	4	12 3/8	7	3	17 3/4	22 1/4
18	6	13 7/8	9	3 1/2	19 1/2	24
20	6	15 3/8	9	3 1/2	21	25 1/2
24	6	17 15/16	9	4	23 1/4	28 1/4

* ALL DIMENSIONS IN INCHES.

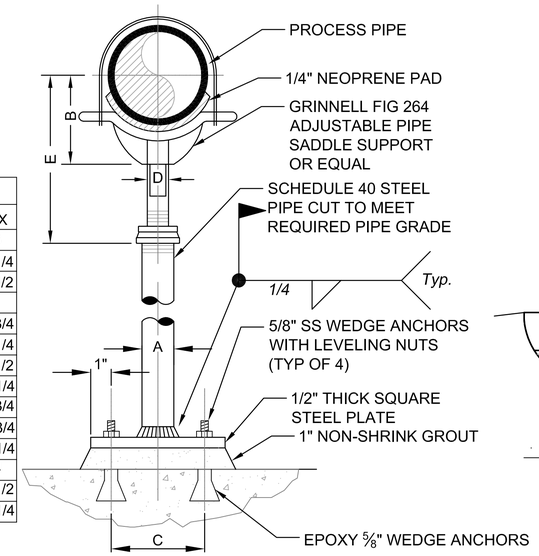

PIPE SUPPORT ADJUSTABLE DETAIL

NOT TO SCALE

STEEL PIPE DIMENSIONS		
DIAMETER "D" INCHES	SADDLE LENGTH "X" INCHES	WIDTH 'W'
30	32	3
16	18	3
8	12	3

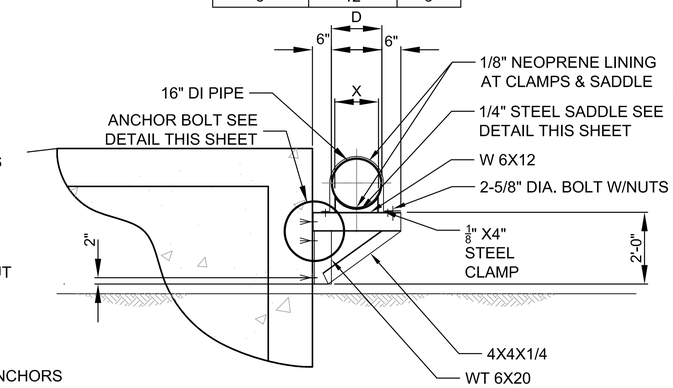

PIPE SUPPORT BRACKET DETAIL

NOT TO SCALE

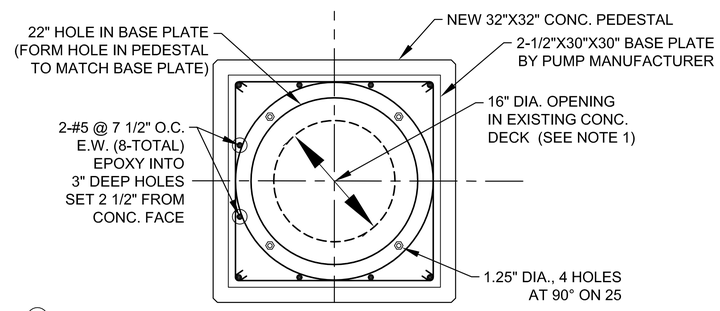

1 PUMP COLUMN CENTER SHALL BE SET TO MATCH EXISTING PUMPS NO. 2 - NO. 4

PUMP BASE PLATE DETAIL

NOT TO SCALE

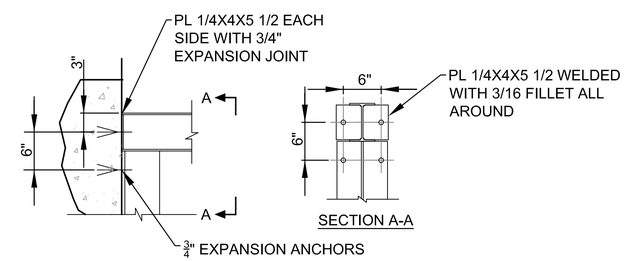

ANCHOR BOLT DETAIL

NOT TO SCALE

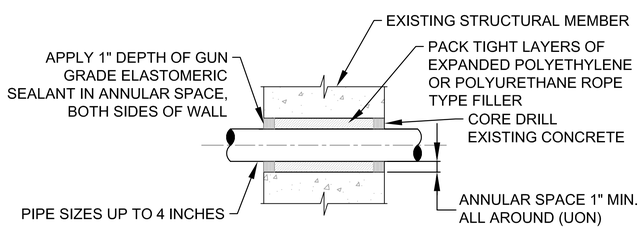

PENETRATION SEAL
CONC. WALL OR FLOOR FOR SMALL DIA.

NOT TO SCALE

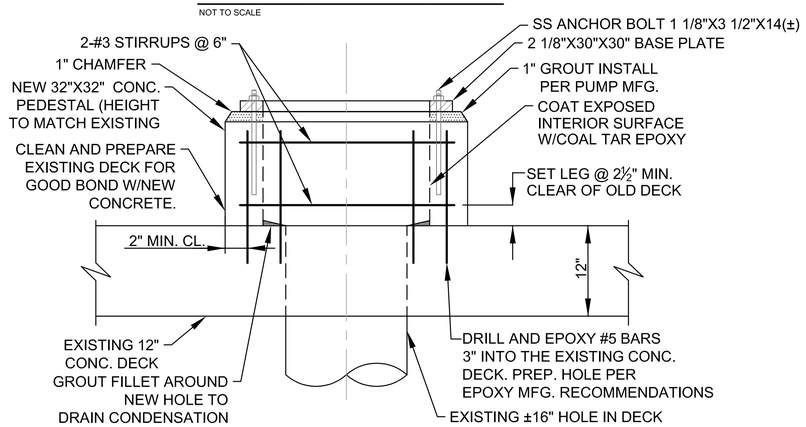

NOTE:
SET BASE PLATE (PEDESTAL HEIGHT) RELATIVE TO PUMP SCREEN 2" MIN. ABOVE FLOOR

PUMP PEDESTAL DETAIL

NOT TO SCALE

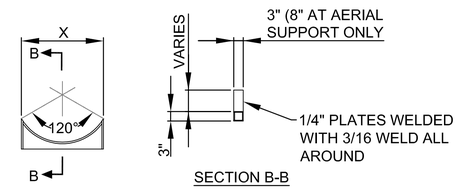

SADDLE DETAIL

NOT TO SCALE

J &A Associates
Engineers and Managers, Inc.
4900 Manatee Avenue West, Suite 203
Bradenton, FL , 34209
Phone 941-254-7901 Fax 941-254-7902

© 2014 J&A ASSOCIATES ENGINEERS AND MANAGERS, INC.

NO.	REVISIONS	DATE	BY

PROFESSIONAL ENGINEER:
ASHLEY M. MIELE, PE
LICENSE NUMBER: 66476
DATE:

SCALE: AS SHOWN
DESIGNED BY: WWW
DRAWN BY: OCM
CHECKED BY: SMH

Howard F. Current AWTP
Reclaimed Water Pump
Station Improvements
(Atlas K-13)

MISCELLANEOUS DETAILS

cph
A Full Service A & E Firm
Architects M / E / P
Engineers Planners
Environmental Surveyors
www.cphcorp.com Landscape Architects Traffic/Transportation
5601 Mariner Street Tampa, FL 33609
Phone: 813.288.0233
Licenses:
Eng. C.O.A. No. 3215 Arch. Lic. No. AA2600926
Survey L.B. No. 7143 Landscape Lic. No. LC0000298

DATE
01/13/2014
PROJECT NUMBER
JA13-08AWC
SHEET NUMBER
6

This document, together with the concepts and designs presented herein, as an instrument of service, is intended only for the specific purpose and client for which it was prepared. Reuse of and improper reliance on this document without written authorization and adaptation by J&A Associates shall be without liability to J&A Associates.
Drafted by Charles Bailey, Creative CAD Source, 941.876.3004, www.creativecadsource.com

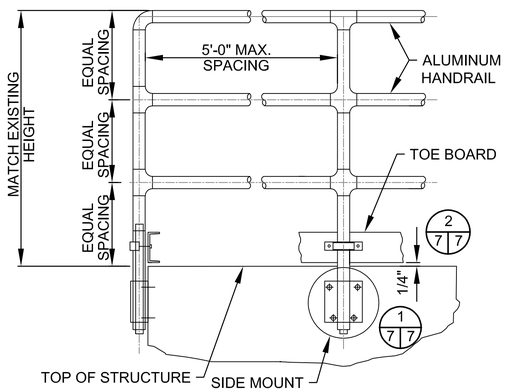

HANDRAIL DETAIL
NOT TO SCALE

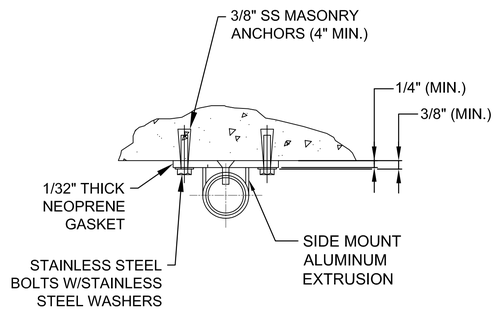

HANDRAIL PLAN VIEW
NOT TO SCALE

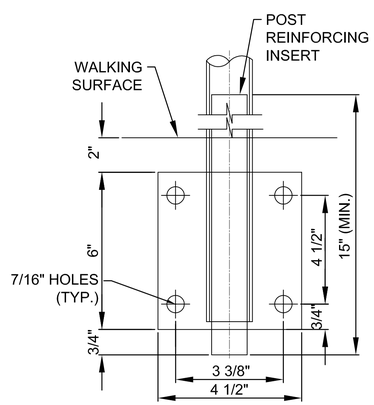

ELEVATION

NOTE:
USE 3/8" MACHINE BOLTS AND HARDWARE FOR METAL BRIDGE MOUNTING.

SIDE MOUNT DETAIL 1 / 7 7
NOT TO SCALE

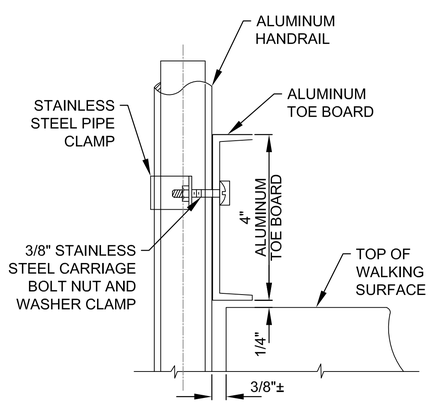

TOE BOARD ELEVATION

TOE BOARD DETAIL 2 / 7 7
NOT TO SCALE

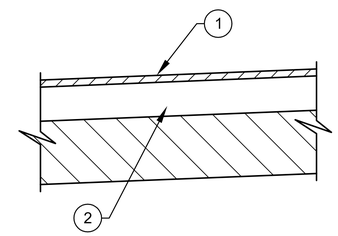

PAVEMENT DESIGN

1. 1-3/4" SUPERPAVE 12.5 ASPHALT
2. 12" CRUSHED CONCRETE
   NOTE: BACKFILL AND SUBGRADE SHALL BE IN COMPACTED IN 12" LIFTS TO 98% OF MDD AS DETERMINED BY AASHTO T-180.

TYPICAL PAVEMENT SECTION
NOT TO SCALE

J &A Associates
Engineers and Managers, Inc.
4900 Manatee Avenue West, Suite 203
Bradenton, FL , 34209
Phone 941-254-7901 Fax 941-254-7902

© 2014 J&A ASSOCIATES ENGINEERS AND MANAGERS, INC.

NO.	REVISIONS	DATE	BY

PROFESSIONAL ENGINEER:
ASHLEY M. MIELE, PE
LICENSE NUMBER: 66476
DATE:

SCALE: AS SHOWN
DESIGNED BY: WWW
DRAWN BY: GCM
CHECKED BY: SWR

Howard F. Current AWTP
Reclaimed Water Pump
Station Improvements
(Atlas K-13)

MISCELLANEOUS DETAILS

DATE 01/13/2014
PROJECT NUMBER JA13-08AWC
SHEET NUMBER 7

cph
A Full Service A & E Firm
Architects Engineers Environmental
M / E / P Planners Surveyors
www.cphcorp.com Landscape Architects Traffic/Transportation
5601 Mariner Street Tampa, FL 33609
Phone: 813.288.0233
Licenses:
Eng. C.O.A. No. 3215 Arch. Lic. No. AA2600926
Survey L.B. No. 7143 Landscape Lic. No. LC0000298

This document, together with the concepts and designs presented herein, as an instrument of service, is intended only for the specific purpose and client for which it was prepared. Reuse of and improper reliance on this document without written authorization and adaptation by J&A Associates shall be without liability to J&A Associates.
Drafted by Charles Bailey, Creative CAD Source, 941.876.3304, www.creativecadsource.com

ELECTRICAL LEGEND

SYMBOL	DESCRIPTION
F1	FLUORESCENT FIXTURE – CEILING MNTD., F1 INDICATES FIXTURE TYPE.
F2	FLUORESCENT FIXTURE – WALL MNTD., F2 INDICATES FIXTURE TYPE.
F3	FLUORESCENT STRIP FIXTURE, F3 INDICATES FIXTURE TYPE.
F4	INCAND., LED OR HID FIXTURE – CEILING MNTD., F4 INDICATES FIXTURE TYPE.
F5	INCAND., LED OR HID FIXTURE – WALL MNTD., F5 INDICATES FIXTURE TYPE.
F6	INCAND. EMERGENCY LIGHT, MNTD. 18" BELOW CLG., F6 INDICATES FIXTURE TYPE.
F7	EXIT LIGHT – TOP MNTD., F7 INDICATES FIXTURE TYPE.
F8	EXIT LIGHT – BACK MNTD., F8 INDICATES FIXTURE TYPE.
S	SINGLE POLE SWITCH 20A, 120/277V, CTR. @ 50" AFF.
S_2	DOUBLE POLE SWITCH 20A, 120/277V, CTR. @ 50" AFF.
S_3	THREE-WAY SWITCH 20A, 120/277V, CTR. @ 50" AFF.
S_4	FOUR-WAY SWITCH 20A, 120/277V, CTR. @ 50" AFF.
S_D	INCAND. ROTARY DIMMER, CTR. @ 50" AFF.
S_K	KEY OPERATED SWITCH, CTR. @ 50" AFF.
S_M	MANUAL MOTOR STARTER w/ THERMAL OVERLOAD ELEMENTS, CTR. @ 50" AFF.
S_P	SWITCH WITH PILOT LIGHT 20A, 120/277V, CTR. @ 50" AFF.
	20A, 125V, 3-WIRE DUPLEX GROUNDING RECEPT., CTR. @ 18" AFF.
	20A, 125V, 3-WIRE GROUNDING DUPLEX RECEPT., CTR @ 50" AFF OR 4" ABOVE COUNTER.
	20A, 125V, 3-WIRE SINGLE GROUNDING RECEPT., CTR. @ 18" AFF.
	20A, 125V, 3-WIRE DUPLEX RECEPT. FED FROM DEDICATED CIRCUIT.
	3-WIRE DUPLEX RECEPT., TOP SWITCHED 20A, 125V, 3-WIRE QUADRUPLEX GROUNDING.
	20A, 125V, 3-WIRE, QUADRUPLEX GROUNDING RECEPTACLE.
	20A, 125V, 3-WIRE DUPLEX FLOOR MNTD. RECEPT.
	50A, 250V, 3-WIRE RANGE RECEPT.
	30A, 250V, 4-WIRE GROUNDING RECEPT.
	SPECIAL PURPOSE RECEPT., RATING AS SHOWN.
	15A, 250V, 3-WIRE GROUNDING, SINGLE RECEPTACLE.
	20A, 125V, 3-WIRE QUADRUPLEX GROUNDING RECEPTACLE, FLOOR MNTD.
	OUTLET BOX w/ BLANK COVER. FLOOR MNTD.
J	JUNCTION BOX – SIZED PER NEC
ES	EMERGENCY SHUTDOWN SWITCH 20A 120/277V, CTR. @ 72" AFF.
	4" SQ. OUTLET BOX WITH BLANK COVER, CTR. @ 18" AFF.
	4" SQ. TELEPHONE WALL OUTLET, CTR. @ 18" AFF.
	TELEPHONE OUTLET, FLOOR MNTD.
	4" SQ. TELEVISION OUTLET, CTR. @ 18" AFF.
	MAGNETIC MOTOR STARTER
	HORSEPOWER RATED MANUAL STARTER
T	STEP-DOWN, DRY-TYPE TRANSFORMER
	MOTOR OPERATED VALVE
	WELD, BY EXOTHERMIC WELD PROCESS (CADWELD), CONNECTION POINT.
	DOWN CONDUCTOR TO GROUND ROD

SYMBOL	DESCRIPTION
	CONDUIT IN SLAB OR BURIED
	CONDUIT CONCEALED IN CLG. OR WALL
	CONDUIT EXPOSED
T	TELEPHONE CONDUIT CONCEALED IN CLG. OR WALL
T	TELEPHONE CONDUIT IN SLAB OR UNDERGROUND
OH	OVERHEAD PRIMARY FEEDER
UG	UNDERGROUND PRIMARY FEEDER
	CONDUIT CONCEALED IN CLG. OR WALL – UP
	CONDUIT CONCEALED IN CLG. OR WALL – DOWN
	120V, 1ø CIRCUIT HOMERUN TO 1-POLE BRKR.
	277V, 1ø CIRCUIT HOMERUN TO 1-POLE BRKR.
	240V OR 480V, 1ø CIRCUIT HOMERUN TO 2-POLE BRKR.
	208V OR 480V, 3ø CIRCUIT HOMERUN TO 3-POLE BRKR.
	SLASH MARKS DENOTE NO. OF WIRES; LONG – NEUTRAL, X – GROUND, O – ISOLATED GROUND.
	BRANCH CIRCUIT PANELBOARD, TOP @ 6'-0" AFF.
	MAIN DISTRIBUTION PANELBOARD OR SWITCHBOARD
3 60/40	HEAVY DUTY SAFETY SWITCH, 60A, 3-POLE, FUSED @ 40A, TOP @ 6'-0" AFF.
	COMBINATION DISCONNECT & MAGNETIC MOTOR STARTER
100 HP 460 VAC 3ø	MOTOR, 100 HP, 460 VAC, 3ø
2000 KVA 277/480 VAC 3ø, 4W	EMERGENCY GENERATOR, 2000 KVA.
	NEMA SIZED MOTOR STARTING CONTACTOR w/ 120 VAC COIL & MOTOR OVERLOAD ELEMENTS SIZED w/ MOTOR NAMEPLATE DATA.
	STEP-DOWN TRANSFORMER, RATING AS INDICATED ON DRAWINGS.
M (METER, PLAN VIEW)	POWER COMPANY METER, RATING AS INDICATED ON DRAWINGS. CENTER METER 4'-6" ABOVE FINISHED GRADE.
3	KEYED NOTE SYMBOL, REFERENCE KEYED NOTE #3.
3P, 50A	CIRCUIT BREAKER, 3P, 50A
	PUSH BUTTON STATION
	UNION & SEALING FITTING, SIZED PER CONDUIT.
x	LED PILOT LIGHT, PUSH TO TEST, x INDICATES COLOR, G=GREEN, R=RED, B=BLUE, A=AMBER
x	LED PILOT LIGHT, x INDICATES COLOR, G=GREEN, R=RED, B=BLUE, A=AMBER
	ALARM STROBE
	AUDIBLE ALARM HORN
	TERMINAL FOR CONNECTION TO FIELD DEVICE
	PLC TERMINAL CONNECTION
R2	R2 – RELAY COIL
R2	R2 – RELAY CONTACT, NORMALLY OPEN
R2	R2 – RELAY CONTACT, NORMALLY CLOSED
	SOLENOID VALVE

SYMBOL	DESCRIPTION
	FIRE ALARM CONTROL PANEL (FACP). TOP AT 6'-0" AFF.
	FIRE ALARM STROBE. MOUNT 90" AFF.
	FIRE ALARM HEAT DETECTOR – CEILING MOUNT
	FIRE ALARM PULL STATION – TOP @ 48" AFF.
E	DUCT TYPE PHOTOELECTRIC SMOKE DETECTOR
	FIRE ALARM HORN STROBE – COMBINATION FIRE ALARM HORN AND STROBE. MOUNT TOP OF ENCLOSURE 90" AFF & NOT LESS THAN 6" FROM CEILING.
	FIRE ALARM HORN – MNT. TOP OF ENCLOSURE 90" AFF & NOT LESS THAN 6" FROM CEILING.
	FIRE ALARM PHOTO-ELECTRIC SMOKE/HEAT SENSOR-CEILING MOUNTED
EOL	FIRE ALARM END OF LINE RESISTOR
	LEVEL SWITCH, NORMALLY OPEN
	LEVEL SWITCH, NORMALLY CLOSED
	LIMIT SWITCH, NORMALLY OPEN
	LIMIT SWITCH, NORMALLY CLOSED
	PRESSURE SWITCH, NORMALLY OPEN
	PRESSURE SWITCH, NORMALLY CLOSED
	FLOW SWITCH, NORMALLY OPEN
	FLOW SWITCH, NORMALLY CLOSED
	TEMPERATURE SWITCH, NORMALLY OPEN
	TEMPERATURE SWITCH, NORMALLY CLOSED
	MOMENTARY PUSH BUTTON, NORMALLY OPEN
	MOMENTARY PUSH BUTTON, NORMALLY CLOSED
HAND OFF AUTO	HAND-OFF-AUTO (HOA) SWITCH, SHOWN IN THE HAND POSITION
TD5	TD5 – TIME DELAY RELAY
TD5	TD5 – TIMED CONTACT, NORMALLY OPENED, TIMED CLOSED.
TD5	TD5 – TIMED CONTACT, NORMALLY OPENED, TIMED OPEN.
TD5	TD5 – TIMED CONTACT, NORMALLY CLOSED, TIMED OPEN.
TD5	TD5 – TIMED CONTACT, NORMALLY CLOSED, TIMED CLOSED.
TM	ELAPSED TIME METER
SPD	SURGE PROTECTIVE DEVICE

ABBREVIATIONS

ø	PHASE
3P	3 POLE
A	AMPERE
ABV	ABOVE
AF	AMPERE FRAME
AFD	ADJUSTABLE FREQUENCY DRIVE
AFF	ABOVE FINISHED FLOOR
AFG	ABOVE FINISHED GRADE
AIC	AMPERE INTERRUPTING CAPACITY
AT	AMPERE TRIP
ATS	AUTOMATIC TRANSFER SWITCH
AWG	AMERICAN WIRE GAUGE
BLDG.	BUILDING
BRKR.	BREAKER
C.	CONDUIT
c/w	COMPLETE WITH
CAB	CABINET
CAT. NO.	CATALOG NUMBER
CB	CIRCUIT BREAKER
CKT.	CIRCUIT
CLG.	CEILING
CM	CENTIMETER
CO	CONDUIT ONLY
CO.	COMPANY
COORD.	COORDINATE
CT	CURRENT TRANSFORMER
CTR.	CENTER
CTRD.	CENTERED
DEG.	DEGREE
DIA.	DIAMETER
DISC	DISCONNECT
DN	DOWN
DWG	DRAWING
EC	EMPTY CONDUIT
ELEC	ELECTRICAL, ELECTRIC
ELEV	ELEVATOR
EM	EMERGENCY
EMT	ELECTRICAL METALLIC TUBING
EO	ELECTRICALLY OPERATED
EQUIP	EQUIPMENT
ESD	EMERGENCY SHUTDOWN
EX	EXISTING
EXH	EXHAUST
FEMA	FEDERAL EMERGENCY MANAGEMENT AGENCY
F	FUSE
FA	FIRE ALARM
FL	FLOOR
FLA	FULL LOAD AMPERES
FTS	FLOAT TEST SWITCH
FUT	FUTURE
GFCI	GROUND FAULT CIRCUIT INTERRUPTER
GND.	GROUND
HOA	HAND OFF AUTO
HP	HORSEPOWER
HT	HEIGHT
IG	ISOLATED GROUND
JB, JBOX	JUNCTION BOX
KCMIL	1000 CIRCULAR MILS
KVA	KILOVOLT AMPERES
KW	KILOWATTS

LA	LIGHTNING ARRESTER
LPG	LIGHTING PANEL "G"
LTG	LIGHTING
MACH	MACHINE
MCB	MAIN CIRCUIT BREAKER
MCC	MOTOR CONTROL CENTER
MECH	MECHANICAL
MFR.	MANUFACTURER
MGD	MILLION GALLONS PER DAY
MIN.	MINIMUM
MLO	MAIN LUGS ONLY
MNT.	MOUNT
MNTD.	MOUNTED
MNTG.	MOUNTING
MSH	MOTOR SPACE HEATER
N.C.	NORMALLY CLOSED
NEC	NATIONAL ELECTRICAL CODE
NEMA	NATIONAL ELECTRICAL MANUFACTURERS ASSOCIATION
NEUT.	NEUTRAL
NF	NON-FUSED
N.O.	NORMALLY OPENED
NO.	NUMBER
NTS	NOT TO SCALE
PB	PUSH BUTTON
PLC	PROGRAMMABLE LOGIC CONTROLLER
PMR	PHASE MONITOR RELAY
PNL	PANEL
PPX	POWER PANEL "X"
PT.	POINT
PVC	POLYVINYL CHLORIDE
PWR	POWER
RECEPT.	RECEPTACLE
REQ'D.	REQUIRED
RTD	RESISTANCE TEMPERATURE DETECTOR
RTU	REMOTE TELEMETRY UNIT
RVSSS	REDUCED VOLTAGE SOLID STATE STARTER
RWHSP	RECLAIMED WATER HIGH SERVICE PUMP
SA	SURGE ARRESTER
SCADA	SUPERVISORY CONTROL AND DATA ACQUISITION
SPD	SURGE PROTECTIVE DEVICE
SS	STAINLESS STEEL
SW	SWITCH
SWBD	SWITCHBOARD
TELE	TELEPHONE
THRU	THROUGH
TR	TRIP
TVSS	TRANSIENT VOLTAGE SURGE SUPPRESSOR
TYP.	TYPICAL
UG	UNDERGROUND
U.O.N.	UNLESS OTHERWISE NOTED
UPS	UNINTERRUPTIBLE POWER SUPPLY
V	VOLT
VAC	VOLTS ALTERNATING CURRENT
W	WIRE
w/	WITH
WP	WEATHERPROOF
XFMR	TRANSFORMER

J & A Associates
Engineers and Managers, Inc.
4900 Manatee Avenue West, Suite 203
Bradenton, FL 34209
Phone 941-254-7901 Fax 941-254-7902

© 2012 J&A ASSOCIATES ENGINEERS AND MANAGERS, INC.

NO.	REVISIONS	DATE	BY

PROFESSIONAL ENGINEER:
BOB E. HALLMAN, PE
REGISTRATION NO. 20761
DATE:

SCALE:
DESIGNED BY: STK
DRAWN BY: RWB
CHECKED BY: BEH

LEGEND & ABBREVIATIONS

Engineering Design Technologies Corp.
P.O. Box 152403
Tampa, FL 33684-2403
813.289.8080
813.282.9184 FAX
engineering@edt1.com
Certificate of Authorization Number: 4795

ENGINEER OF RECORD:
BOB E. HALLMAN, P.E.
FLORIDA REGISTRATION NO. 20761

HFC AWTP RCW PUMP STATION IMPROVEMENTS (ATLAS K-13)

DATE 01/06/2014
PROJECT NUMBER 31021JA
SHEET NUMBER
E-1

GENERAL NOTES:

1. CONTRACTOR SHALL SUBMIT SHOP DRAWINGS FOR APPROVAL AND SHALL RECEIVE SAID APPROVAL PRIOR TO PURCHASING EQUIPMENT OR COMMENCING CONSTRUCTION.
2. ALL SHOP DRAWINGS SUBMITTED TO ENGINEER FOR APPROVAL SHALL BE ORIGINAL COPIES. COPIES OF SHOP DRAWINGS OR DATA SHEETS TRANSMITTED BY FACSIMILE (FAX) WILL NOT BE REVIEWED.
3. THE EXISTING RECLAIMED WATER PUMPS SHALL REMAIN IN SERVICE. THE DEMOLITION AND REMOVAL OF THE EXISTING EQUIPMENT SHALL BE ACCOMPLISHED AS NOT TO INTERRUPT RECLAIMED WATER SERVICE, WITHOUT PROPER NOTIFICATION AND COORDINATION.
4. SHIELD AND DRAIN WIRE FOR EACH ANALOG SIGNAL (4–20 mA) CABLE SHALL BE GROUNDED AT THE PLC ONLY. THE SHIELD AND DRAIN WIRE AT EACH FIELD DEVICE SHALL BE NEATLY TRIMMED & TAPED w/ (2) LAYERS OF VINYL ELECTRICAL TAPE (SCOTCH 33+).
5. ALL CONDUCTORS SHALL BE STRANDED COPPER, #12 AWG MIN. w/ THHN INSULATION, UNLESS OTHERWISE NOTED.
6. ALL CONTROL PANEL CONTROL WIRING SHALL BE THHN INSULATED, STRANDED COPPER #16 AWG MIN. UNLESS OTHERWISE NOTED.
7. ALL WIRING SHALL BE IDENTIFIED w/ NUMBERS AT ALL TERMINALS AND ON WIRING DIAGRAMS. MARKERS SHALL BE THOMAS & BETTS INSTA–CODE CLIP–ON MARKERS OR APPROVED EQUAL.
8. ALL CIRCUITS SHALL HAVE GROUNDING CONDUCTORS ROUTED INSIDE THE CONDUIT w/ POWER CONDUCTORS.
9. ALL POWER CONDUCTORS AND MOTOR WINDINGS SHALL BE TESTED WITH A 600 VOLT INSULATION RESISTANCE TESTER "MEGGER". INSULATION READINGS SHALL BE A MINIMUM OF 20 MEGOHMS TO GROUND (DO NOT TEST LOW–VOLTAGE CONTROLS). INSULATION READINGS THAT ARE LESS THAN 20 MEGOHMS SHALL REQUIRE THE REPLACEMENT OF THE CONDUCTOR OR MOTOR AS APPLICABLE.
10. NEATLY COIL & TAPE SPARE CONDUCTORS w/ VINYL ELECTRICAL TAPE (SCOTCH 33+) U.O.N.
11. ALL CONDUCTOR LENGTHS SHALL BE CONTINUOUS. NO SPLICES OR CONDUCTOR TERMINATIONS SHALL BE PERMITTED UNLESS SPECIFICALLY DESIGNATED IN THE DRAWINGS.
12. LIQUIDTIGHT FLEXIBLE NON–METALLIC CONDUIT CONNECTIONS TO EACH MOTOR SHALL NOT EXCEED A LENGTH OF 18".
13. ALL THREADED CONNECTIONS SHALL BE COATED w/ COPPER SHIELD ANTI–SEIZE COMPOUND MANUFACTURED BY THOMAS & BETTS (T & B).
14. ALL UNDERGROUND CONDUITS SHALL BE BURIED w/ A MINIMUM OF 24" COVER UNLESS OTHERWISE NOTED.
15. CONDUIT ROUTING SHOWN IS DIAGRAMMATIC UNLESS OTHERWISE NOTED. CONTRACTOR SHALL OPTIMIZE THE CONDUIT ROUTING, TAKING INTO ACCOUNT THE FIELD CONDITIONS AND THE FINAL EQUIPMENT SELECTED AND APPROVED IN THE SUBMITTALS.
16. PULL BOXES SHALL BE INSTALLED AS NECESSARY TO FACILITATE WIRE PULLS AND TO AVOID EXCESSIVE PULLING TENSION ON WIRING. IN NO CASE SHALL CONDUIT LENGTHS EXCEED 150' OR THE EQUIVALENT OF FOUR QUARTER BENDS (360 DEGREES TOTAL) WITHOUT A PULL BOX. PULL BOXES SHALL BE SIZED IN ACCORDANCE WITH ARTICLE 314 OF THE NEC.
17. PROVIDE PVC SLEEVES FOR ALL METALLIC CONDUIT PENETRATIONS THROUGH CONCRETE. WHERE ALUMINUM SURFACES SUCH AS BOXES, CONDUIT OR STRUCTURAL SUPPORTS COME IN CONTACT WITH INCOMPATIBLE METALS, LIME, MORTAR, CONCRETE OR OTHER MASONRY MATERIALS, THE CONTACT AREA SHALL BE GIVEN ONE FIELD COAT OF KOPPERS METAL PASSIVATOR NO. 40 AND ONE COAT OF KOPPERS BITUMASTIC SUPER SERVICE BLACK OR TWO COATS OF ASPHALT VARNISH CONFORMING TO FED. SPEC. TT–V–51.
18. ALL CONDUIT TRENCHES SHALL BE DUG BY HAND TO AVOID DAMAGING UNDERGROUND PIPING AND UTILITIES.
19. ALL UNDERGROUND CONDUITS SHALL BE ENCASED IN STEEL REINFORCED CONCRETE. CONCRETE ENCASEMENT SHALL BE IN ACCORDANCE w/ THE DUCT BANK DETAIL.
20. THE CONTRACTOR SHALL REPLACE ALL EXISTING PAVING, STABILIZED EARTH, CURBS, DRIVEWAYS, FENCES & OTHER IMPROVEMENTS WITH THE SAME TYPE OF MATERIAL THAT WAS REMOVED DURING CONSTRUCTION OR AS DIRECTED BY THE ENGINEER.
21. CONTRACTOR SHALL MAINTAIN A CLEAR PATH FOR ALL SURFACE WATER DRAINAGE STRUCTURES & DITCHES DURING ALL PHASES OF CONSTRUCTION.
22. ALL CONDUIT SHALL BE SUPPORTED AT MAXIMUM 5'–0" INTERVALS.
23. ALL FASTENING AND MOUNTING HARDWARE SHALL BE 316 SS. CAD PLATED HARDWARE WILL NOT BE ACCEPTED.
24. ALL UNISTRUT SHALL BE 1 5/8" x 1 5/8" x 12 GA. 316 STAINLESS STEEL.
25. CONTRACTOR SHALL FIELD VERIFY ALL MECHANICAL EQUIPMENT SIZES AND RATINGS PRIOR TO CONNECTING.
26. CONTRACTOR SHALL FIELD VERIFY ALL EQUIPMENT LOCATIONS AND CONNECTIONS PRIOR TO COMMENCING CONSTRUCTION.
27. ALL PANELS, PANEL COMPONENTS, DISCONNECTS, SWITCHES & EQUIPMENT COVERPLATES SHALL BE LABELED w/ NAMEPLATES. NAMEPLATES SHALL BE THREE PLY PHENOLIC BLACK–WHITE–BLACK ENGRAVED THROUGH THE FIRST BLACK LAYER. LETTERING SHALL BE 0.5 CM (3/16") MIN. EDGES OF NAMEPLATES SHALL BE BEVELED 45°. THE NAMEPLATES SHALL BE SECURED TO EQUIPMENT WITH STAINLESS STEEL SCREWS OR RIVETS. THE USE OF GLUE IS NOT PERMITTED.
28. ALL INSTALLED COMPONENTS SHALL BE LISTED BY UNDERWRITERS LABORATORY (UL), OR SIMILAR NATIONALLY RECOGNIZED TESTING LABORATORY.
29. ALL EQUIPMENT SHALL BE INSTALLED AT AN ELEVATION ABOVE THE FLOODPLAIN ESTABLISHED BY FEMA AND/OR LOCAL AUTHORITIES.
30. REFERENCE PLAN & SECTION DRAWINGS FOR EQUIPMENT LOCATIONS.
31. COORDINATE ALL INSTALLATIONS w/ ALL OTHER TRADES.
32. THE CONTRACTOR SHALL NOTIFY THE ENGINEER IMMEDIATELY WHEN CONFLICTS BETWEEN DRAWINGS & ACTUAL CONDITIONS ARE DISCOVERED.
33. ALL "AS BUILT" DRAWINGS PROVIDED BY THE CONTRACTOR SHALL BE SIGNED AND DATED WITH CHANGES CLEARLY NOTED IN RED. ADDITIONALLY, THE PRINTED NAME OF THE INDIVIDUAL SIGNING THE "AS BUILT" DRAWINGS ALONG WITH THAT PERSON'S COMPANY AFFILIATION SHALL BE INCLUDED. IF NO CHANGES WERE MADE DURING CONSTRUCTION, A NOTE DESIGNATING "NO CHANGES" SHALL BE INCLUDED ON THE "AS BUILT" DRAWINGS.
34. ALL EXISTING INSTALLATIONS DENOTED ON THE DRAWINGS ARE FOR CONTRACTOR'S REFERENCE ONLY. ALL EXISTING INSTALLATIONS SHALL BE FIELD VERIFIED PRIOR TO SUBMITTING A BID & PRIOR TO COMMENCING CONSTRUCTION.
35. PROVIDE A MINIMUM OF 3'–0" CLEARANCE IN FRONT OF ALL ELECTRICAL EQUIPMENT IN ACCORDANCE w/ ARTICLE 110 OF THE NEC.
36. ALL ELECTRICAL WORK SHALL BE PERFORMED IN ACCORDANCE w/ THE LATEST EDITION OF THE NEC AND APPLICABLE LOCAL ORDINANCES.
37. ALL CONDUITS ROUTED IN CONCRETE SHALL BE INSTALLED WITH A SEPARATION BETWEEN CONDUITS OF NOT LESS THAN 3 DIAMETERS (CENTER–TO–CENTER) & IN ACCORDANCE WITH AMERICAN CONCRETE INSTITUTE STANDARD NO. 318–89.
38. ALL CONDUIT EXPOSED ABOVE GRADE SHALL BE RIGID HEAVY WALL ALUMINUM, UNLESS OTHERWISE NOTED. CONDUITS EXTENDING BELOW GRADE SHALL BE RIGID HEAVY WALL ALUMINUM CONDUIT THROUGH AND INCLUDING THE FIRST 90 DEGREE ELBOW (OR EQUIVALENT SET OF FITTINGS) INSTALLED BELOW GRADE. ALL PVC CONDUIT SHALL BE SCHEDULE 80. CONNECTIONS TO PVC CONDUIT SHALL BE MADE w/ A RIGID ALUMINUM TO PVC CONDUIT ADAPTER.
39. ALL INSTALLATIONS SHALL BE IN ACCORDANCE WITH CITY OF TAMPA CODE 5–111.6.1.5 CITY OF TAMPA CODE CHAPTER 5 ISSUED 10/01/2005.

J & A Associates
Engineers and Managers, Inc.
4900 Manatee Avenue West, Suite 203
Bradenton, FL 34209
Phone 941-254-7901 Fax 941-254-7902

© 2012 J&A ASSOCIATES ENGINEERS AND MANAGERS, INC.

NO.	REVISIONS	DATE	BY

PROFESSIONAL ENGINEER:
BOB E. HALLMAN, PE
REGISTRATION NO. 20761
DATE:

SCALE:
DESIGNED BY: STK
DRAWN BY: RWB
CHECKED BY: BEH

GENERAL NOTES

Engineering Design Technologies Corp.
P.O. Box 152403
Tampa, FL 33684
813.289.8080
813.282.9184 FAX
engineering@edt1.com
Certificate of Authorization Number: 4795

ENGINEER OF RECORD:
BOB E. HALLMAN, PE
FLORIDA REGISTRATION NO. 20761

HFC AWTP RCW
PUMP STATION
IMPROVEMENTS
(ATLAS K-13)

DATE
01/06/2014
PROJECT NUMBER
31021JA
SHEET NUMBER
E-2

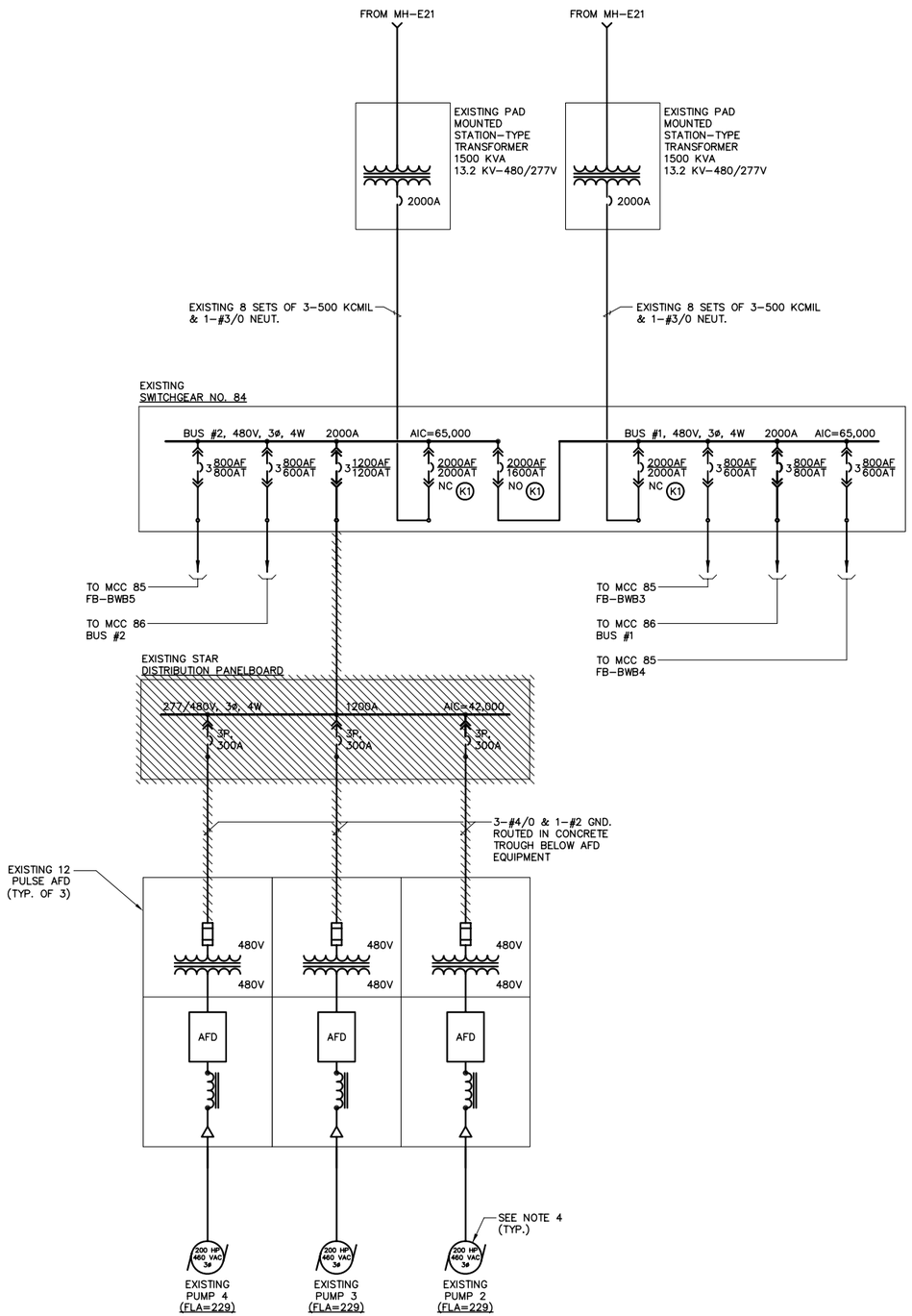

EXISTING ELECTRICAL ONE-LINE DIAGRAM

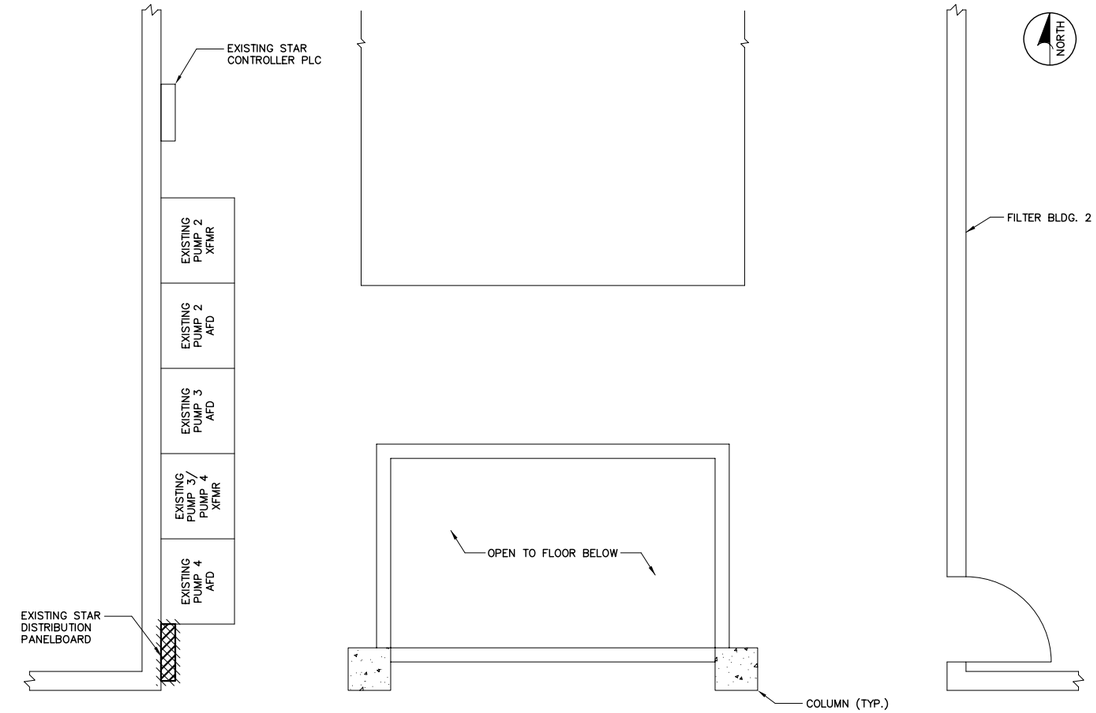

NOTES:

- DENOTES EXISTING EQUIPMENT TO BE REMOVED. ITEM SHALL BE REMOVED FROM PREMISES AND DISPOSED OF PROPERLY. UNLESS OTHERWISE NOTED, REMOVE ALL ASSOCIATED CONDUIT & WIRING CONNECTED TO EQUIPMENT TO BE REMOVED, INCLUDING ABANDONED CONDUIT & WIRING.

1. ALL EQUIPMENT, CONDUIT & WIRING INCLUDED ON THIS DRAWING ARE EXISTING. CONTRACTOR SHALL VISIT THE SITE & FAMILIARIZE HIMSELF WITH THE EXISTING CONDITIONS BEFORE SUBMITTING A BID OR COMMENCING CONSTRUCTION.
2. COORDINATE ALL DEMOLITION ACTIVITIES WITH OWNER AND ALL TRADES.
3. ALL EXISTING INSTALLATIONS DENOTED ON THE DRAWINGS ARE FOR CONTRACTORS REFERENCE ONLY. ALL EXISTING INSTALLATIONS SHALL BE FIELD VERIFIED PRIOR TO SUBMITTING A BID AND PRIOR TO COMMENCING CONSTRUCTION.
4. THE EXISTING RECLAIMED WATER PUMPS SHALL REMAIN IN SERVICE. THE DEMOLITION AND REMOVAL OF THE EXISTING EQUIPMENT SHALL BE ACCOMPLISHED AS NOT TO INTERRUPT RECLAIMED WATER SERVICE, WITHOUT PROPER NOTIFICATION AND COORDINATION.

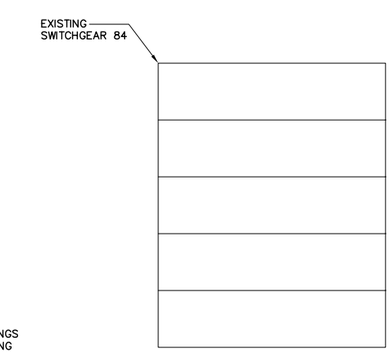

ELECTRICAL DEMOLITION PLAN

(PARTIAL PLAN VIEW OF FILTER BLDG. 2)

J&A Associates
Engineers and Managers, Inc.
4900 Manatee Avenue West, Suite 203
Bradenton, FL 34209
Phone 941-254-7901 Fax 941-254-7902
© 2012 J&A ASSOCIATES ENGINEERS AND MANAGERS, INC.

NO.	REVISIONS	DATE	BY

PROFESSIONAL ENGINEER:
BOB E. HALLMAN, PE
REGISTRATION NO. 20761
DATE:

SCALE:
DESIGNED BY: STK
DRAWN BY: RWB
CHECKED BY: BEH

EXISTING ELECTRICAL ONE-LINE DIAGRAM/ DEMOLITION PLAN

Engineering Design Technologies Corp.
P.O. Box 152403
Tampa, FL 33684-2403
813.289.8080
813.282.9184 FAX
engineering@edt1.com
Certificate of Authorization Number: 4795

ENGINEER OF RECORD:
BOB E. HALLMAN, P.E.
FLORIDA REGISTRATION NO. 20761

HFC AWTP RCW PUMP STATION IMPROVEMENTS (ATLAS K-13)

DATE 01/06/2014
PROJECT NUMBER 31021JA
SHEET NUMBER
E-3

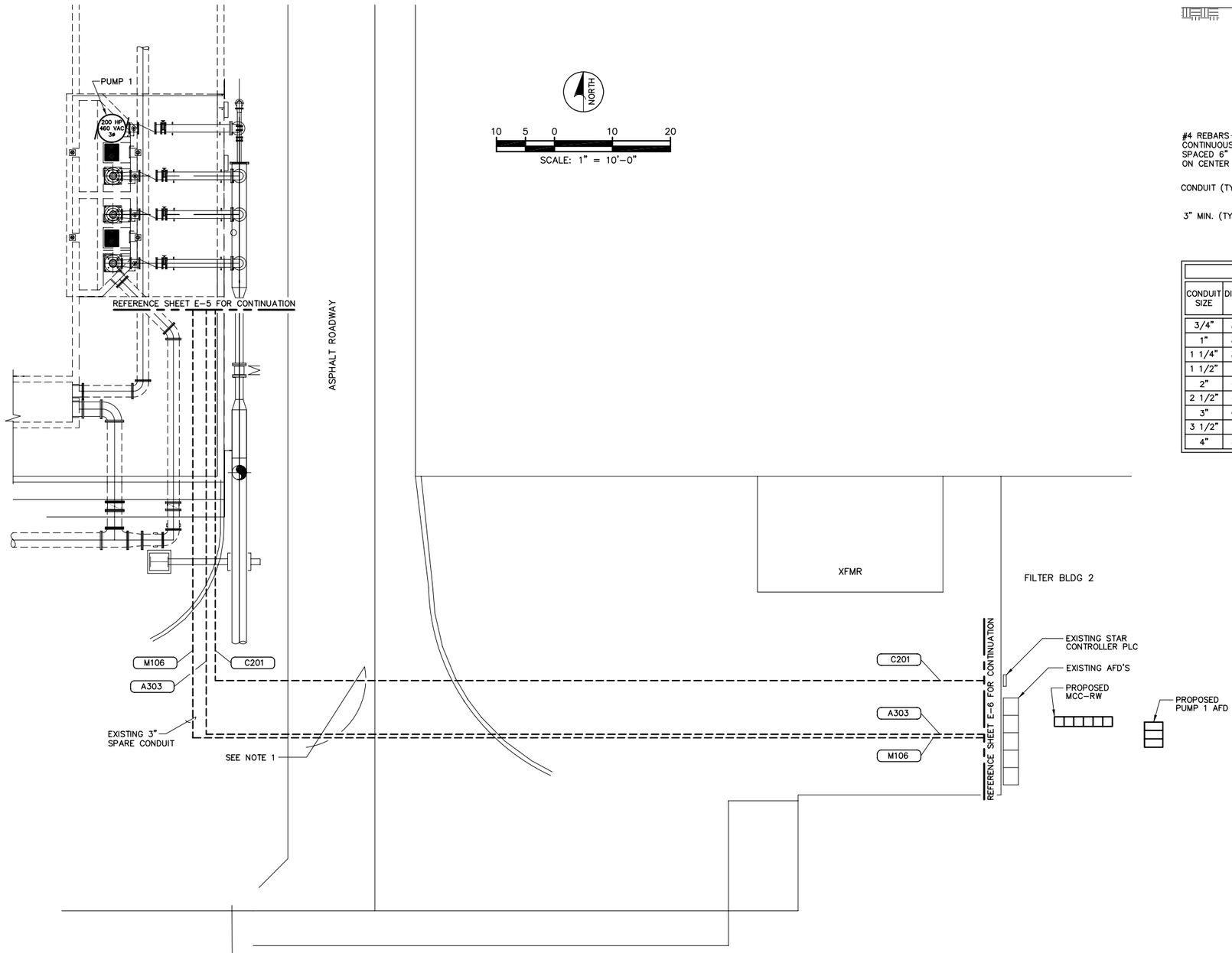

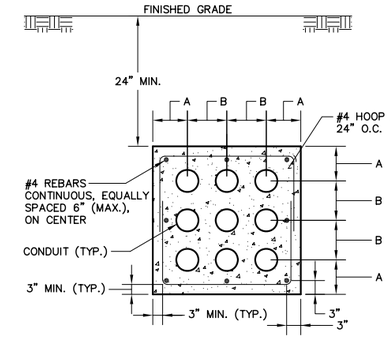

NOTES:

1. CONCRETE SHALL BE 3000 PSI. MINIMUM COMPRESSION STRENGTH.
2. TOP OF DUCT BANK SHALL BE DYED RED.
3. TOP OF DUCT BANK SHALL BE 24" BELOW FINISHED GRADE.
4. 4" CONDUIT BEND RADIUS SHALL BE A MINIMUM OF 48".
5. ALL EMPTY CONDUITS SHALL INCLUDE A PULL WIRE AND SHALL BE CAPPED.
6. DUCT BANKS MAY BE RE-ARRANGED FOR CONVENIENCE OF EGRESS.
7. REFERENCE ELECTRICAL DRAWINGS FOR CONDUIT SIZE.
8. THIS DETAIL IS FOR LAYOUT PURPOSES ONLY. FOR THE ACTUAL NUMBER OF CONDUITS & FEEDERS SEE PLAN DRAWINGS.

DUCT BANK CONDUIT SPACING DIMENSIONS

CONDUIT SIZE	DIMENSION A	CONDUIT SIZE								
		3/4"	1"	1 1/4"	1 1/2"	2"	2 1/2"	3"	3 1/2"	4"
		DIMENSION B								
3/4"	3 5/8"	3 1/8"	3 1/4"	3 3/8"	3 1/2"	3 3/4"	4"	4 3/8"	4 5/8"	4 7/8"
1"	3 3/4"	3 1/4"	3 3/8"	3 1/2"	3 5/8"	3 7/8"	4 1/4"	4 1/2"	4 3/4"	5"
1 1/4"	3 7/8"	3 3/8"	3 1/2"	3 3/4"	3 7/8"	4 1/8"	4 3/8"	4 5/8"	4 7/8"	5 1/8"
1 1/2"	4"	3 1/2"	3 5/8"	3 7/8"	4"	4 1/4"	4 1/2"	4 3/4"	5"	5 1/4"
2"	4 1/4"	3 3/4"	3 7/8"	4 1/8"	4 1/4"	4 3/8"	4 5/8"	5"	5 1/4"	5 1/2"
2 1/2"	4 1/2"	4"	4 1/8"	4 3/8"	4 1/2"	4 5/8"	4 7/8"	5 1/4"	5 1/2"	5 3/4"
3"	4 3/4"	4 3/8"	4 1/2"	4 5/8"	4 3/4"	5"	5 1/4"	5 1/2"	5 3/4"	6"
3 1/2"	5"	4 5/8"	4 3/4"	4 7/8"	5"	5 1/4"	5 1/2"	5 3/4"	6"	6 1/4"
4"	5 1/4"	4 7/8"	5"	5 1/8"	5 1/4"	5 1/2"	5 3/4"	6"	6 1/4"	6 1/2"

DUCT BANK DETAIL

NOTES:

1. THE CONTRACTOR SHALL FILL TRENCHES AND COMPACT SOIL TO MATCH THE EXISTING GRADE AFTER THE INSTALLATION OF THE CONDUIT IS COMPLETE. IN AREAS WHERE THE CONDUIT IS ROUTED UNDER AN ASPHALT OR CONCRETE PAVED SURFACE THE CONTRACTOR SHALL RESTORE THE SURFACE TO THE ORIGINAL SURFACE CONDITION & MATCH THE ELEVATION OF THE ADJOINING SURFACES.
2. THE CONTRACTOR SHALL REFERENCE THE EXISTING AS-BUILT DRAWINGS FOR PIPING AND UTILITIES IN THIS AREA. THE CITY WILL PROVIDE COPIES OF EXISTING AS-BUILT DRAWINGS UPON WRITTEN REQUEST BY THE CONTRACTOR.
3. ALL UNDERGROUND CONDUITS SHALL BE ENCASED IN STEEL REINFORCED CONCRETE. CONCRETE ENCASEMENT SHALL BE IN ACCORDANCE w/ THE DUCT BANK DETAIL.

J &A Associates
Engineers and Managers, Inc.
4900 Manatee Avenue West, Suite 203
Bradenton, FL 34209
Phone 941-254-7901 Fax 941-254-7902
© 2012 J&A ASSOCIATES ENGINEERS AND MANAGERS, INC.

NO.	REVISIONS	DATE	BY

PROFESSIONAL ENGINEER:
BOB E. HALLMAN, PE
REGISTRATION NO. 20761
DATE:

SCALE:
DESIGNED BY: STK
DRAWN BY: RWB
CHECKED BY: BEH

ELECTRICAL SITE PLAN

Engineering Design Technologies Corp.
P.O. Box 152403
Tampa, FL 33684-2403
813.289.8080
813.282.9184 FAX
engineering@edt1.com
Certificate of Authorization Number: 4795

ENGINEER OF RECORD:
BOB E. HALLMAN, P.E.
FLORIDA REGISTRATION NO. 20761

HFC AWTP RCW PUMP STATION IMPROVEMENTS (ATLAS K-13)

DATE
01/06/2014
PROJECT NUMBER
31021JA
SHEET NUMBER
E-4

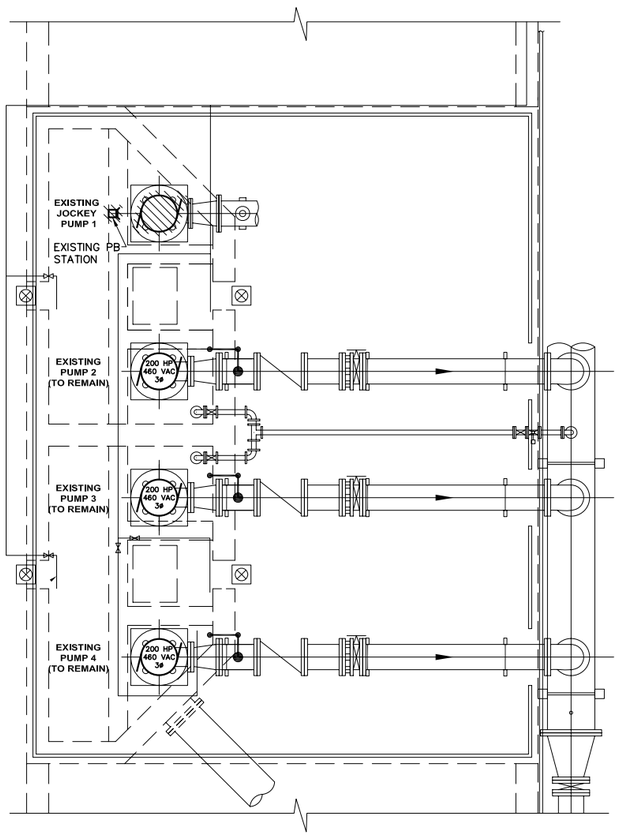

NOTES:

– DENOTES EXISTING EQUIPMENT TO BE REMOVED. ITEM SHALL BE REMOVED FROM PREMISES AND DISPOSED OF PROPERLY. UNLESS OTHERWISE NOTED, REMOVE ALL ASSOCIATED CONDUIT & WIRING CONNECTED TO EQUIPMENT TO BE REMOVED, INCLUDING ABANDONED CONDUIT & WIRING.

1. ALL EQUIPMENT, CONDUIT & WIRING INCLUDED ON THIS DRAWING ARE EXISTING. CONTRACTOR SHALL VISIT THE SITE & FAMILIARIZE HIMSELF WITH THE EXISTING CONDITIONS BEFORE SUBMITTING A BID OR COMMENCING CONSTRUCTION.
2. COORDINATE ALL DEMOLITION ACTIVITIES WITH OWNER AND ALL TRADES.
3. ALL EXISTING INSTALLATIONS DENOTED ON THE DRAWINGS ARE FOR CONTRACTORS REFERENCE ONLY. ALL EXISTING INSTALLATIONS SHALL BE FIELD VERIFIED PRIOR TO SUBMITTING A BID AND PRIOR TO COMMENCING CONSTRUCTION.
4. THE CONTRACTOR SHALL REFERENCE THE EXISTING AS–BUILT DRAWINGS FOR PIPING AND UTILITIES IN THIS AREA. THE CITY WILL PROVIDE COPIES OF EXISTING AS–BUILT DRAWINGS UPON WRITTEN REQUEST BY THE CONTRACTOR.

PUMP AREA DEMOLITION PLAN

NORTH

2 1 0 2 4

SCALE: 1/4" = 1'–0"

THE MOTOR SHALL BE PROVIDED WITH A PHENOLIC WARNING LABEL. THE LABEL SHALL BE A THREE PLY PHENOLIC RED–WHITE–RED ENGRAVED THROUGH THE FIRST RED LAYER. THE LETTERING SHALL BE 0.5 CM (3/16") MIN. EDGES OF LABEL SHALL BE BEVELED 45 DEG. LABEL SHALL READ AS FOLLOWS: "WARNING – ELECTRICAL SHOCK HAZARD. MOTOR IS EQUIPPED WITH SPACE HEATERS. SPACE HEATER REMAINS ENERGIZED WHEN MOTOR IS OFF".

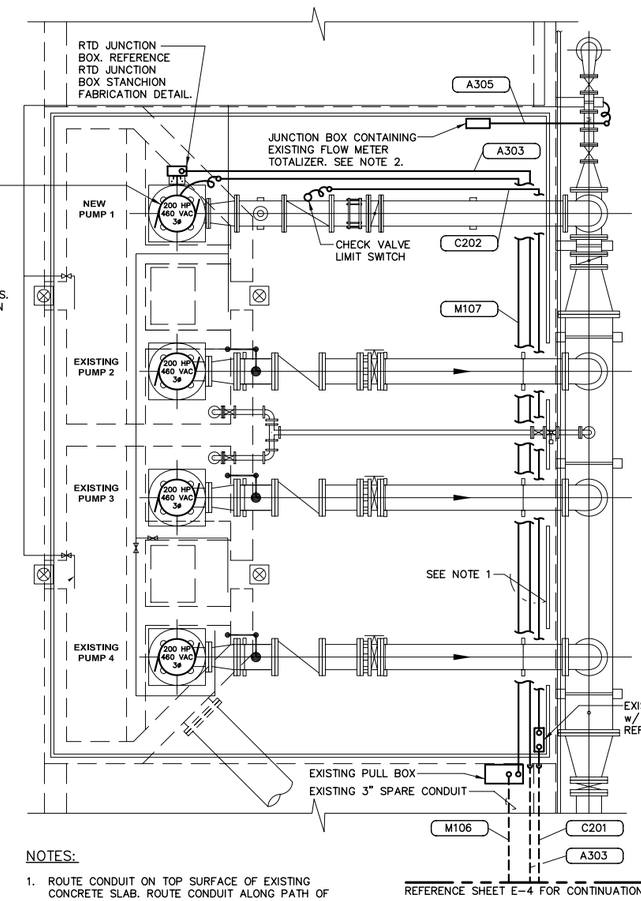

NOTES:

1. ROUTE CONDUIT ON TOP SURFACE OF EXISTING CONCRETE SLAB. ROUTE CONDUIT ALONG PATH OF PIPING TO MINIMIZE TRIPPING HAZARD. COORDINATE ROUTING PATH OF CONDUIT WITH EXISTING PIPING AND NEW PIPING. COORDINATE WITH OTHER TRADES. REFERENCE CONCRETE SLAB CONDUIT SECURING DETAIL.
2. REMOVE THE EXISTING FLOW METER TOTALIZER, LIGHTING FIXTURE, RECEPTACLE AND SWITCH LOCATED IN THE EXISTING JUNCTION BOX. DISCONNECT THE EXISTING WIRING CONNECTED TO THE EXISTING FLOW METER TOTALIZER. REPLACE THE EXISTING FLOW METER w/ AN ABB WATER MASTER FLOW METER. UTILIZE THE EXISTING 4–20 mA SIGNAL WIRING & THE 120 VAC POWER WIRING ROUTED TO THE EXISTING JUNCTION BOX. PROVIDE CONNECTIONS TO NEW FLOW METER IN ACCORDANCE w/ MANUFACTURER'S RECOMMENDATIONS. REFERENCE 8" INCINERATOR RCW MAGNETIC FLOW METER CONNECTION DETAIL.

PUMP AREA CONDUIT ROUTING PLAN

J&A Associates
Engineers and Managers, Inc.
4900 Manatee Avenue West, Suite 203
Bradenton, FL 34209
Phone 941-254-7901 Fax 941-254-7902
© 2012 J&A ASSOCIATES ENGINEERS AND MANAGERS, INC.

NO.	REVISIONS	DATE	BY

PROFESSIONAL ENGINEER:
BOB E. HALLMAN, PE
REGISTRATION NO. 20761
DATE:

SCALE:
DESIGNED BY: STK
DRAWN BY: RWB
CHECKED BY: BEH

PUMP AREA DEMOLITION/CONDUIT ROUTING PLANS

HFC AWTP RCW PUMP STATION IMPROVEMENTS (ATLAS K-13)

Engineering Design Technologies Corp.
P.O. Box 152403
Tampa, FL 33685
813.289.8080
813.282.9184 FAX
engineering@edt1.com
Certificate of Authorization Number: 4795

ENGINEER OF RECORD:
BOB E. HALLMAN, P.E.
FLORIDA REGISTRATION NO. 20761

DATE
01/06/2014
PROJECT NUMBER
31021JA
SHEET NUMBER
E-5

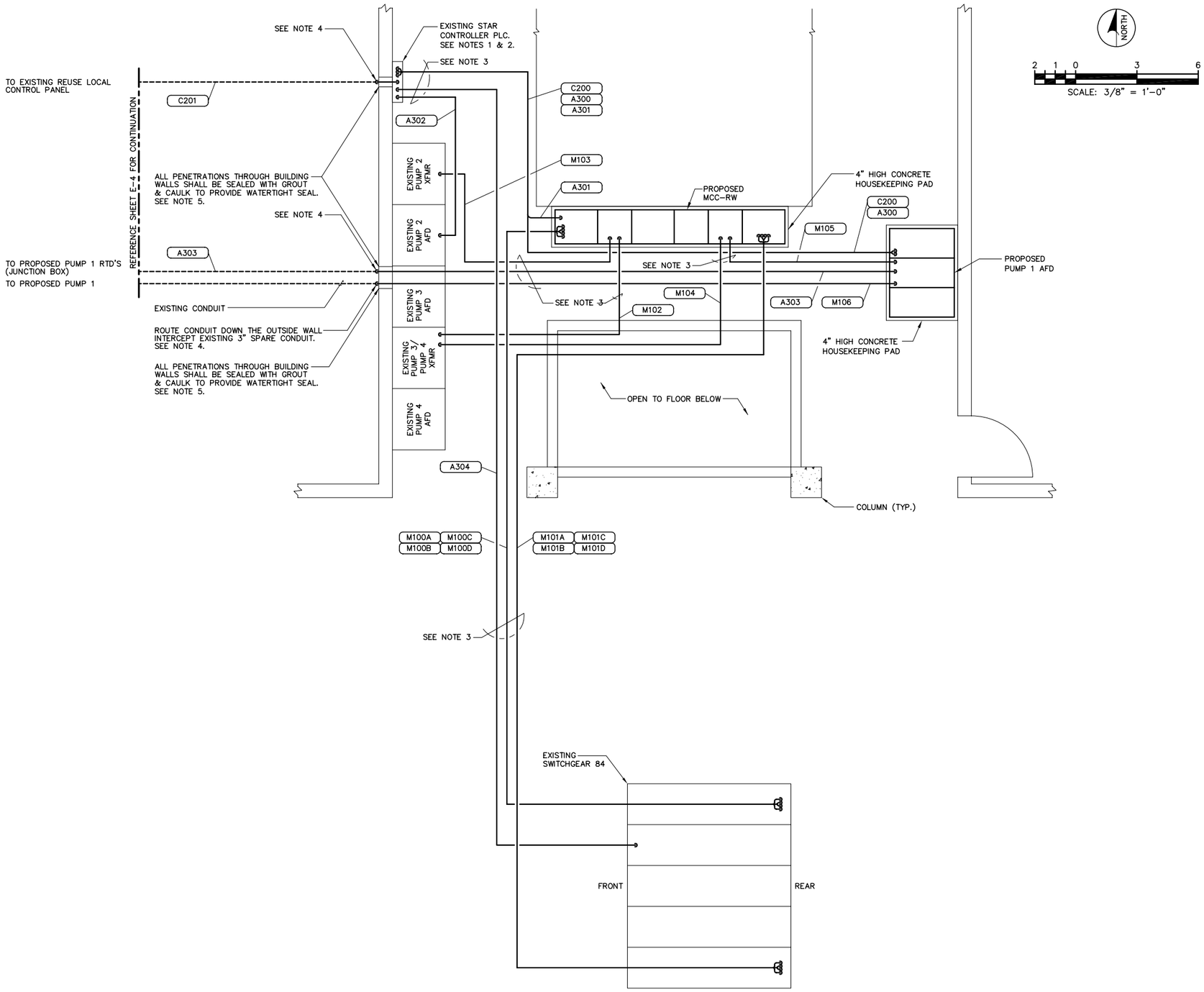

FILTER BLDG. 2
ELECTRICAL EQUIPMENT LAYOUT

(PARTIAL PLAN VIEW OF FILTER BLDG. 2)

NOTES:

1. PROVIDE ALL CONDUIT & CONDUCTORS ROUTED TO THE EXISTING STAR CONTROLLER PLC. CITY WILL BE RESPONSIBLE FOR TERMINATIONS & CONNECTIONS OF ALL WIRING ROUTED TO THE EXISTING STAR CONTROLLER PLC.
2. CITY WILL BE RESPONSIBLE FOR THE PROGRAM MODIFICATIONS REQUIRED IN THE EXISTING STAR CONTROLLER PLC AND THE HOST COMPUTER/HMI.
3. ROUTE CONDUIT OVERHEAD. REFERENCE OVERHEAD CONDUIT SECURING DETAIL.
4. ROUTE CONDUIT DOWN THE OUTSIDE WALL, SECURE CONDUIT TO OUTSIDE WALL w/ 316 SS UNISTRUT 316 SS CONDUIT STRAPS.
5. PROVIDE PVC SLEEVES FOR ALL METALLIC CONDUIT PENETRATIONS THROUGH CONCRETE. WHERE ALUMINUM SURFACES SUCH AS BOXES, CONDUIT OR STRUCTURAL SUPPORTS COME IN CONTACT WITH INCOMPATIBLE METALS, LIME, MORTAR, CONCRETE OR OTHER MASONRY MATERIALS, THE CONTACT AREA SHALL BE GIVEN ONE FIELD COAT OF KOPPERS METAL PASSIVATOR NO. 40 AND ONE COAT OF KOPPERS BITUMASTIC SUPER SERVICE BLACK OR TWO COATS OF ASPHALT VARNISH CONFORMING TO FED. SPEC. TT-V-51.

J&A Associates
Engineers and Managers, Inc.
4900 Manatee Avenue West, Suite 203
Bradenton, FL 34209
Phone 941-254-7901 Fax 941-254-7902

© 2012 J&A ASSOCIATES ENGINEERS AND MANAGERS, INC.

NO.	REVISIONS	DATE	BY

PROFESSIONAL ENGINEER:
BOB E. HALLMAN, PE
REGISTRATION NO. 20761
DATE:

SCALE:
DESIGNED BY: STK
DRAWN BY: RWB
CHECKED BY: BEH

FILTER BLDG. 2
ELECTRICAL
EQUIPMENT LAYOUT

Engineering Design Technologies Corp.
P.O. Box 152403
Tampa, FL 33684-2403
813.289.8080
813.282.9184 FAX
engineering@edt1.com
Certificate of Authorization Number: 4795

ENGINEER OF RECORD:
BOB E. HALLMAN, P.E.
FLORIDA REGISTRATION NO. 20761

HFC AWTP RCW
PUMP STATION
IMPROVEMENTS
(ATLAS K-13)

DATE
01/06/2014
PROJECT NUMBER
31021JA
SHEET NUMBER
E-6

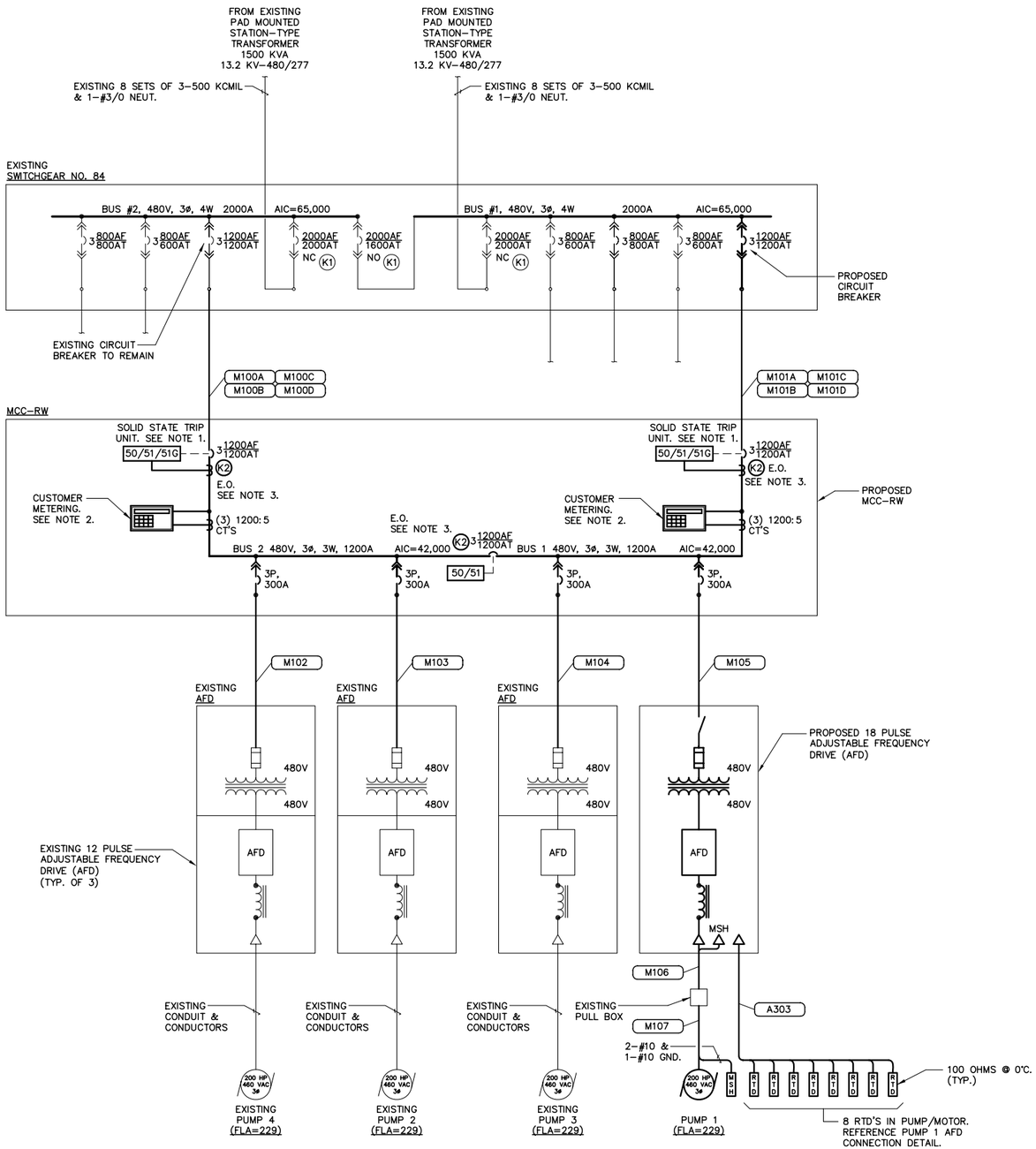

PROPOSED ELECTRICAL ONE-LINE DIAGRAM

EXISTING LOAD SUMMARY - SWITCHGEAR 84

480 VAC, 3ø, 4W

LOAD	BUS 1 CONNECTED	BUS 1 DEMAND	BUS 2 CONNECTED	BUS 2 DEMAND	TOTAL DEMAND
EXISTING MCC 85	698.3 KVA	349.2 KVA	349.2 KVA	349.2 KVA	349.2 KVA
EXISTING MCC 86	480.8 KVA	240.4 KVA	281.3 KVA	240.4 KVA	480.8 KVA
EXISTING RCW PUMP 2	---- KVA	---- KVA	182.5 KVA	165.0 KVA	165.0 KVA
EXISTING RCW PUMP 3	---- KVA	---- KVA	182.5 KVA	165.0 KVA	165.0 KVA
EXISTING RCW PUMP 4	---- KVA	---- KVA	182.5 KVA	165.0 KVA	165.0 KVA
TOTAL	1179.1 KVA	589.6 KVA	1178.0 KVA	1084.6 KVA	1325.0 KVA

PROPOSED LOAD SUMMARY - SWITCHGEAR 84

480 VAC, 3ø, 4W

LOAD	BUS 1 CONNECTED	BUS 1 DEMAND	BUS 2 CONNECTED	BUS 2 DEMAND	TOTAL DEMAND
EXISTING MCC 85	698.3 KVA	349.2 KVA	349.2 KVA	349.2 KVA	349.2 KVA
EXISTING MCC 86	480.8 KVA	240.4 KVA	281.3 KVA	240.4 KVA	480.8 KVA
EXISTING RCW PUMP 2	---- KVA	---- KVA	182.5 KVA	165.0 KVA	165.0 KVA
EXISTING RCW PUMP 3	182.5 KVA	165.0 KVA	---- KVA	---- KVA	165.0 KVA
EXISTING RCW PUMP 4	---- KVA	---- KVA	182.5 KVA	165.0 KVA	165.0 KVA
PROPOSED RCW PUMP 1	182.5 KVA	165.0 KVA	---- KVA	---- KVA	165.0 KVA
TOTAL	1544.1 KVA	919.6 KVA	995.5 KVA	919.6 KVA	1490.0 KVA

EXISTING DEMAND LOADS FOR MCC 85 & MCC 86 ARE BASED ON STUDY DATA PROVIDED BY THE CITY OF TAMPA.
EXISTING LOAD DATA FOR THE RCW PUMPS ARE BASED ON HISTORICAL DATA FROM THE CITY OF TAMPA.

NOTES:

1. THE SOLID STATE TRIP UNIT SHALL PROVIDE THE FOLLOWING CURRENT SENSING & TRIP FUNCTIONS:
   - LONG TIME PICK-UP & DELAY
   - SHORT TIME PICK-UP & DELAY
   - INSTANTANEOUS PICK-UP
   - GROUND FAULT PICK-UP & DELAY
2. CUSTOMER METERING SHALL PROVIDE AS A MINIMUM THE READINGS FOR:
   - VOLTAGE (V)
   - AMPERAGE (A)
   - POWER FACTOR (PF)
   - KILOWATT USAGE (KW)
   - KILOWATT DEMAND (KWD)
   - WATTS (W)
   - VARS (VR)
   - VAR DEMAND (VRD)
   - VAR HOURS (VRH)
   - FREQUENCY (FRQ)
   - THD CURRENT (THC)
   - THD VOLTAGE (THV)
3. CONTRACTOR SHALL INSTALL KIRK KEY INTERLOCKS ON THE TWO (2) MAIN CIRCUIT BREAKERS AND ON THE TIE BREAKER IN MCC-RW. THE KIRK KEY INTERLOCKS SHOWN AS K2 ON THE MAIN CIRCUIT BREAKERS SHALL BE KEYED THE SAME AS THE KIRK KEY INTERLOCK ON THE TIE BREAKER. EACH KIRK KEY LOCK SHALL BE CONFIGURED IN A L-O-R LOCKING POSITION (DEVICE LOCKED OPEN WITH KEY REMOVED) PROVIDE (2) KEYS ONLY.

J&A Associates
Engineers and Managers, Inc.
4900 Manatee Avenue West, Suite 203
Bradenton, FL 34209
Phone 941-254-7901 Fax 941-254-7902
© 2012 J&A ASSOCIATES ENGINEERS AND MANAGERS, INC.

NO.	REVISIONS	DATE	BY

PROFESSIONAL ENGINEER:
BOB E. HALLMAN, PE
REGISTRATION NO. 20761
DATE:

SCALE:
DESIGNED BY: STK
DRAWN BY: RWB
CHECKED BY: BEH

PROPOSED ELECTRICAL ONE-LINE DIAGRAM

Engineering Design Technologies Corp.
P.O. Box 152403
Tampa, FL 33684-2403
813.289.8080
813.282.9184 FAX
engineering@edt1.com
Certificate of Authorization Number: 4795

ENGINEER OF RECORD:
BOBBY E. HALLMAN, PE
FLORIDA REGISTRATION NO. 20761

HFC AWTP RCW PUMP STATION IMPROVEMENTS (ATLAS K-13)

DATE 01/06/2014
PROJECT NUMBER 31021JA
SHEET NUMBER
E-7

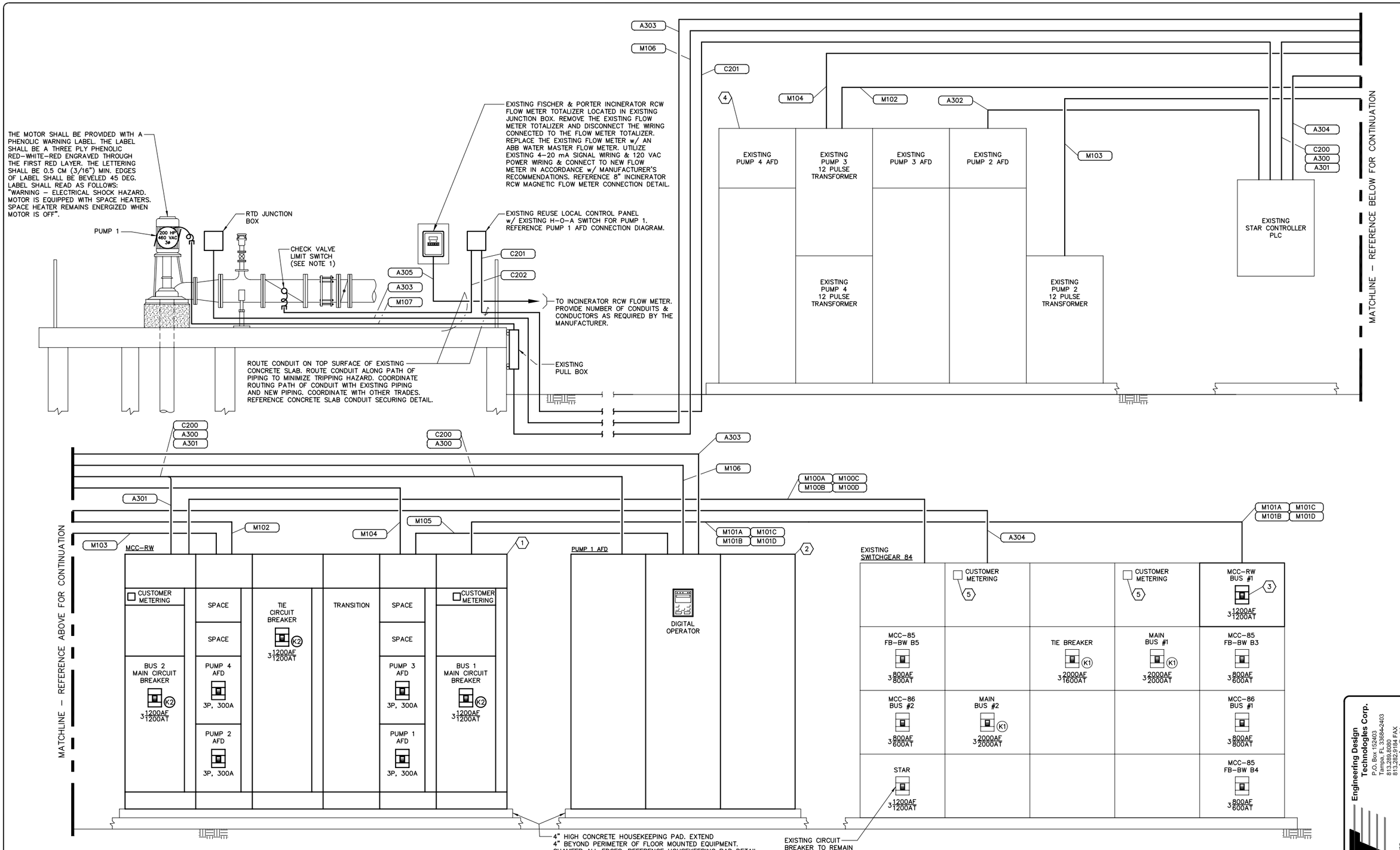

KEYED NOTES:

1. MOTOR CONTROL CENTER (MCC–RW) w/ 1200AF/1200AT 100% RATED MAIN CIRCUIT BREAKERS, TIE CIRCUIT BREAKER, KIRK KEY INTERLOCKS AND DISTRIBUTION SECTIONS. REFERENCE SPECIFICATIONS.
2. ADJUSTABLE FREQUENCY DRIVE (AFD): 240A OUTPUT, 200 HP, 18 PULSE AFD w/ OUTPUT REACTOR, CIRCUIT BREAKER, MOUNTED IN A NEMA 1 FREE STANDING ENCLOSURE. YASKAWA, REFERENCE SPECIFICATIONS.
3. PROVIDE AND INSTALL A 3 POLE, 1200AF/1200AT INSULATED CASE, ELECTRICALLY OPERATED CIRCUIT BREAKER IN THE EXISTING CUTLER–HAMMER SWITCHGEAR 84. COORDINATE CONNECTION REQUIREMENTS w/ SWITCHGEAR MANUFACTURER. REFERENCE SPECIFICATIONS.
4. PROVIDE AND INSTALL A YASKAWA CM086 INTERFACE CARD IN EACH EXISTING AFD. COORDINATE CONNECTION REQUIREMENTS WITH EQUIPMENT MANUFACTURER.
5. COORDINATE RS–485/MODBUS CONNECTIONS TO EXISTING POWER METERS WITH EQUIPMENT MANUFACTURER. PROVIDE ADDITIONAL HARDWARE AS REQUIRED.

NOTES:

1. COORDINATE CHECK VALVE LIMIT SWITCH SELECTION AND MOUNTING WITH THE CHECK VALVE SUPPLIER. REFERENCE CHECK VALVE LIMIT SWITCH DETAILS.

ELECTRICAL RISER DIAGRAM

J & A Associates
Engineers and Managers, Inc.
4900 Manatee Avenue West, Suite 203
Bradenton, FL 34209
Phone 941-254-7901 Fax 941-254-7902

© 2012 J&A ASSOCIATES ENGINEERS AND MANAGERS, INC.

NO.	REVISIONS	DATE	BY

PROFESSIONAL ENGINEER:
BOB E. HALLMAN, PE
REGISTRATION NO. 20761
DATE:

SCALE:
DESIGNED BY: STK
DRAWN BY: RWB
CHECKED BY: BEH

ELECTRICAL RISER DIAGRAM

Engineering Design Technologies Corp.
P.O. Box 152403
Tampa, FL 33684-2403
813.289.8080
813.282.9184 FAX
engineering@edt1.com
Certificate of Authorization Number: 4795

ENGINEER OF RECORD:
BOB E. HALLMAN, P.E.
FLORIDA REGISTRATION NO. 20761

HFC AWTP RCW PUMP STATION IMPROVEMENTS (ATLAS K-13)

DATE 01/06/2014
PROJECT NUMBER 31021JA
SHEET NUMBER E-8

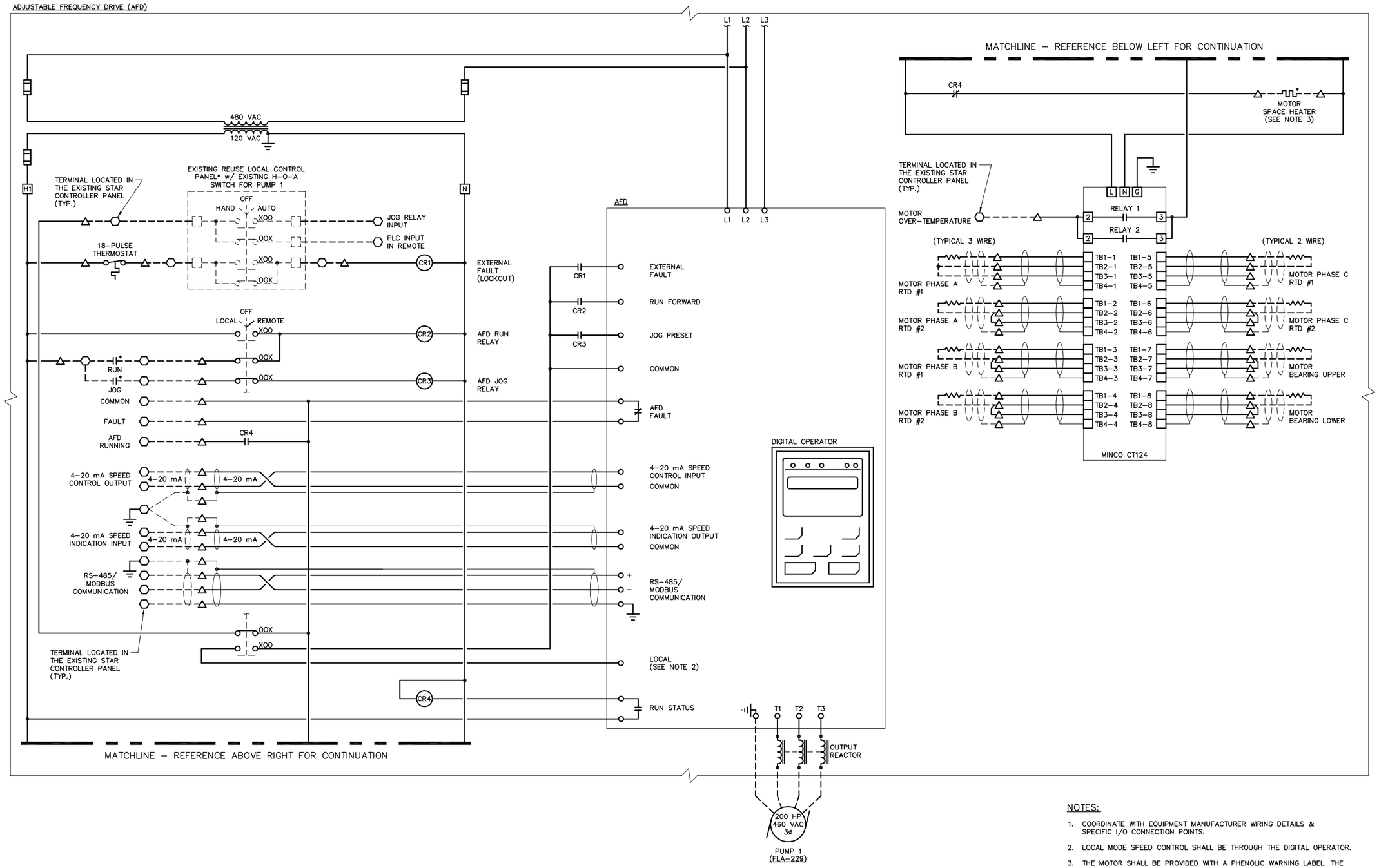

NOTES:

1. COORDINATE WITH EQUIPMENT MANUFACTURER WIRING DETAILS & SPECIFIC I/O CONNECTION POINTS.
2. LOCAL MODE SPEED CONTROL SHALL BE THROUGH THE DIGITAL OPERATOR.
3. THE MOTOR SHALL BE PROVIDED WITH A PHENOLIC WARNING LABEL. THE LABEL SHALL BE A THREE PLY PHENOLIC RED-WHITE-RED ENGRAVED THROUGH THE FIRST RED LAYER. THE LETTERING SHALL BE 0.5 CM (3/16") MIN. EDGES OF LABEL SHALL BE BEVELED 45 DEG. LABEL SHALL READ AS FOLLOWS: "WARNING – ELECTRICAL SHOCK HAZARD, MOTOR IS EQUIPPED WITH SPACE HEATERS. SPACE HEATER REMAINS ENERGIZED WHEN MOTOR IS OFF".

* INDICATES DEVICE LOCATED REMOTE FROM MOTOR STARTER.

△ DENOTES TERMINAL FOR FIELD CONNECTION.

⬡ DENOTES TERMINAL LOCATED IN THE EXISTING STAR CONTROL PANEL.

— — — INDICATES PROPOSED FIELD WIRING

– – – INDICATES EXISTING FIELD WIRING

PUMP 1 AFD CONNECTION DIAGRAM

J&A Associates
Engineers and Managers, Inc.
4900 Manatee Avenue West, Suite 203
Bradenton, FL 34209
Phone 941-254-7901 Fax 941-254-7902

© 2012 J&A ASSOCIATES ENGINEERS AND MANAGERS, INC.

NO.	REVISIONS	DATE	BY

PROFESSIONAL ENGINEER: BOB E. HALLMAN, PE REGISTRATION NO. 20761
DATE:

SCALE:
DESIGNED BY: STK
DRAWN BY: RWB
CHECKED BY: BEH

PUMP 1 AFD CONNECTION DIAGRAM

Engineering Design Technologies Corp.
P.O. Box 152403
Tampa, FL 33684-2403
813.289.8080
813.282.9184 FAX
engineering@edt1.com
Certificate of Authorization Number: 4795

ENGINEER OF RECORD:
BOB E. HALLMAN, P.E.
FLORIDA REGISTRATION NO. 20761

HFC AWTP RCW PUMP STATION IMPROVEMENTS (ATLAS K-13)

DATE 01/06/2014
PROJECT NUMBER 31021JA
SHEET NUMBER
E-9

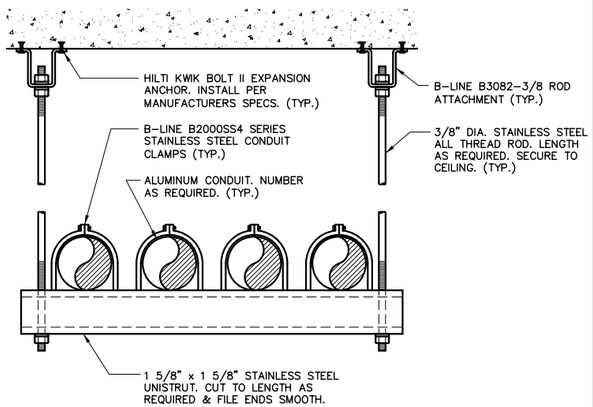

1 OVERHEAD CONDUIT SECURING DETAIL

(FOR USE IN FILTER BUILDING #2)

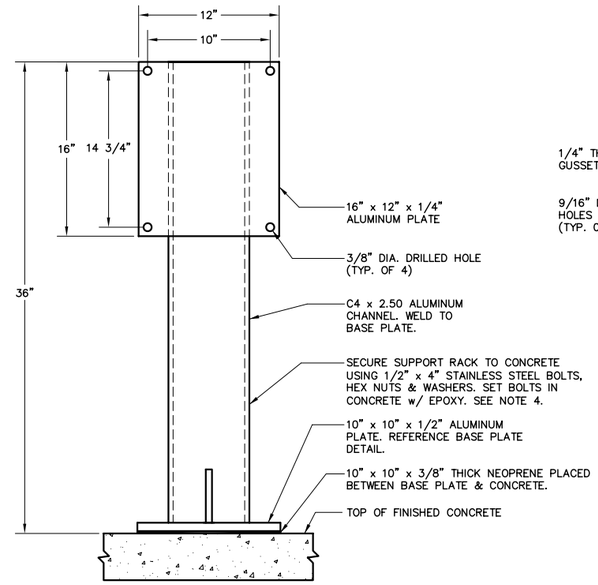

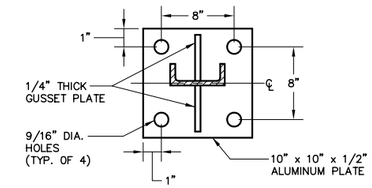

BASE PLATE DETAIL

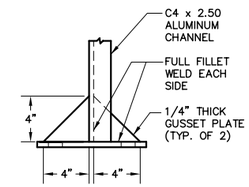

GUSSET PLATE DETAIL

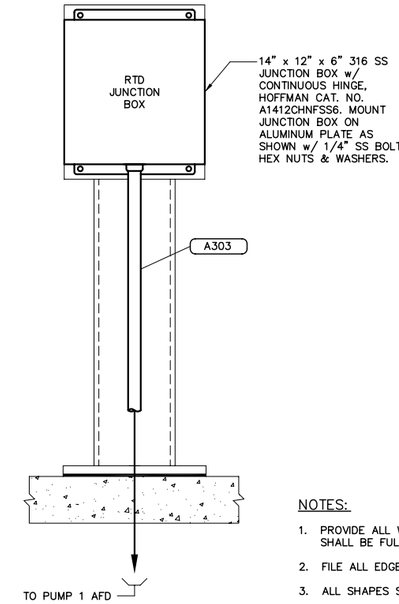

NOTES:

1. PROVIDE ALL WELDED CONSTRUCTION. ALL WELDS SHALL BE FULL FILLET WELDS.
2. FILE ALL EDGES & CORNERS SMOOTH.
3. ALL SHAPES SHALL BE COPPER FREE ALUMINUM.
4. PROVIDE 1/4" NEOPRENE INSULATION BETWEEN BASE PLATE AND CONCRETE.

2 RTD JUNCTION BOX STANCHION FABRICATION DETAIL

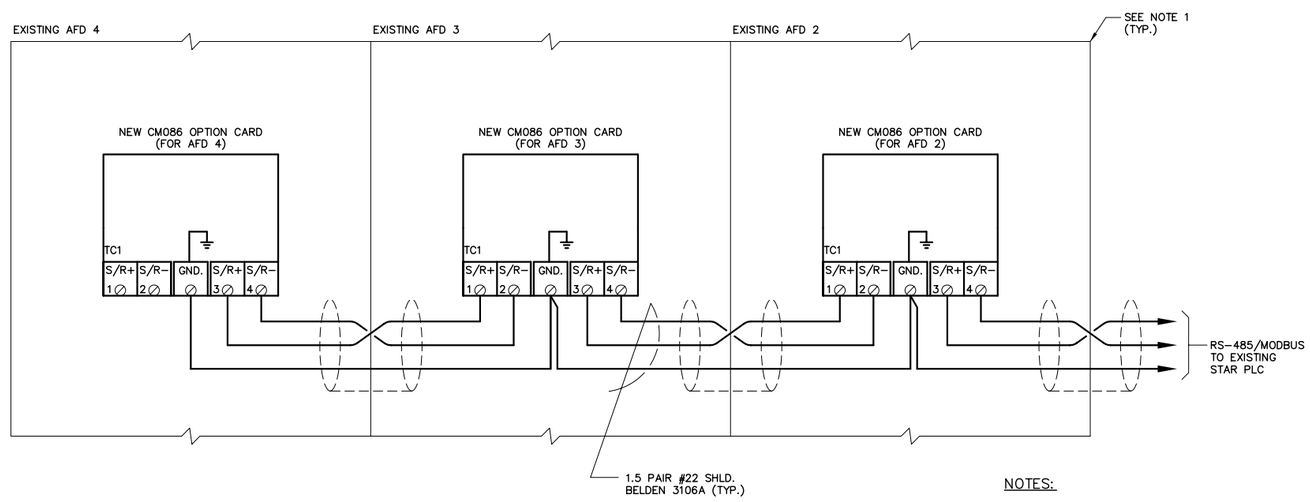

NOTES:

1. PROVIDE AND INSTALL A YASKAWA CM086 INTERFACE CARD IN EACH EXISTING AFD. COORDINATE CONNECTION REQUIREMENTS WITH EQUIPMENT MANUFACTURER.

4 EXISTING AFD RS-485/MODBUS INTERCONNECTION DETAIL

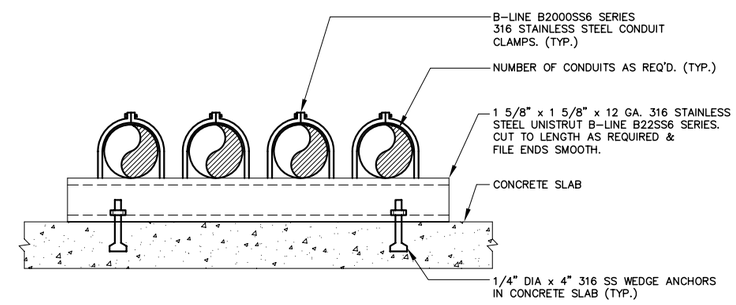

NOTES:

1. CONDUITS SHALL BE SUPPORTED AT MAXIMUM 5'-0" INTERVALS.
2. CONDUITS SHALL BE ROUTED ALONG PIPING WHERE POSSIBLE TO MINIMIZE POTENTIAL TRIPPING HAZARD.

6 CONCRETE SLAB CONDUIT SECURING DETAIL

J&A Associates
Engineers and Managers, Inc.
4900 Manatee Avenue West, Suite 203
Bradenton, FL 34209
Phone 941-254-7901 Fax 941-254-7902

© 2012 J&A ASSOCIATES ENGINEERS AND MANAGERS, INC.

NO.	REVISIONS	DATE	BY

PROFESSIONAL ENGINEER:
BOB E. HALLMAN, PE
REGISTRATION NO. 20761
DATE:

SCALE:
DESIGNED BY: STK
DRAWN BY: RWB
CHECKED BY: BEH

ELECTRICAL DETAILS

Engineering Design Technologies Corp.
P.O. Box 152403
Tampa, FL 33684-2403
813.289.8080
813.282.9184 FAX
engineering@edt1.com
Certificate of Authorization Number: 4795

ENGINEER OF RECORD:
BOB E. HALLMAN, PE
FLORIDA REGISTRATION NO. 20761

HFC AWTP RCW PUMP STATION IMPROVEMENTS (ATLAS K-13)

DATE 01/06/2014
PROJECT NUMBER 31021JA
SHEET NUMBER
E-10

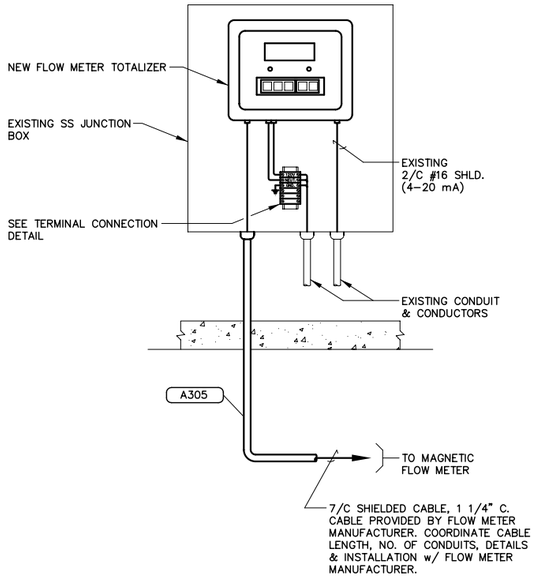

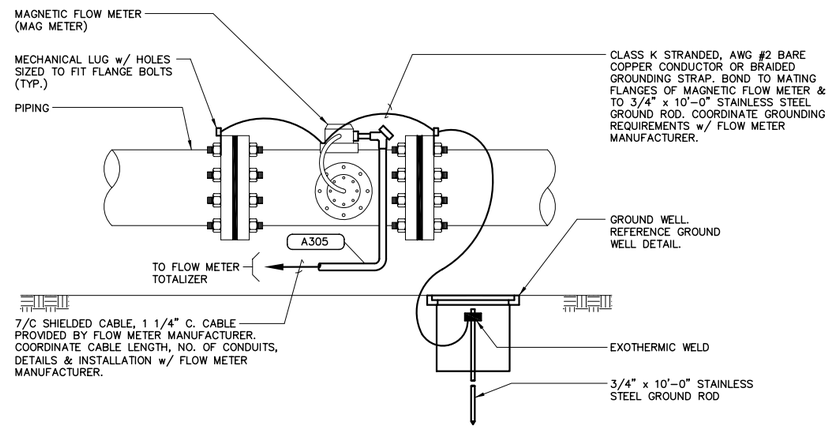

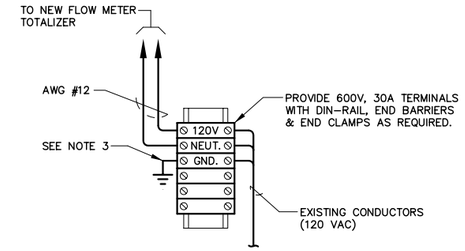

TERMINAL CONNECTION DETAIL

NOTES:

1. USE EXISTING 4–20 mA WIRING & EXISTING 120 VAC WIRING ROUTED TO EXISTING JUNCTION BOX FOR CONNECTIONS TO NEW FLOW METER TOTALIZER.
2. REMOVE DEBRIS & UNUSED ELECTRIC COMPONENTS & WIRING FROM EXISTING JUNCTION BOX.
3. BOND TO BACK PLATE w/ AWG #12 BARE COPPER CONDUCTOR.

1 8" INCINERATOR RCW MAGNETIC FLOW METER CONNECTION DETAILS

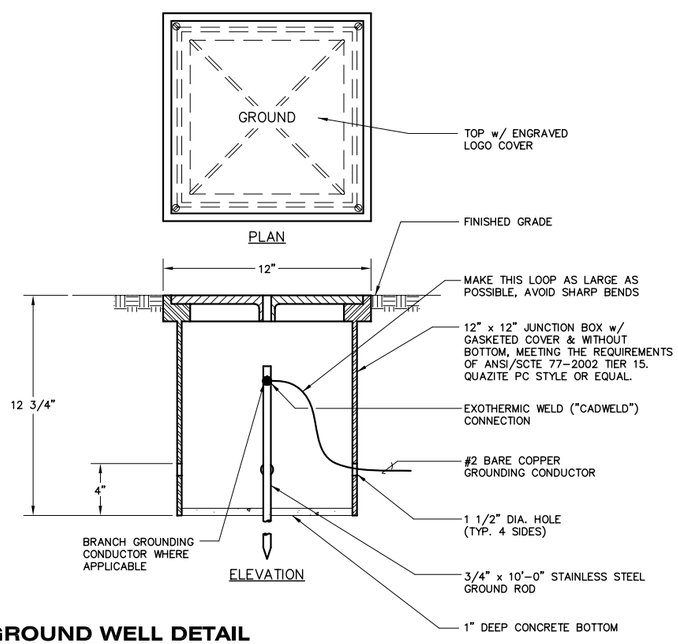

4 GROUND WELL DETAIL

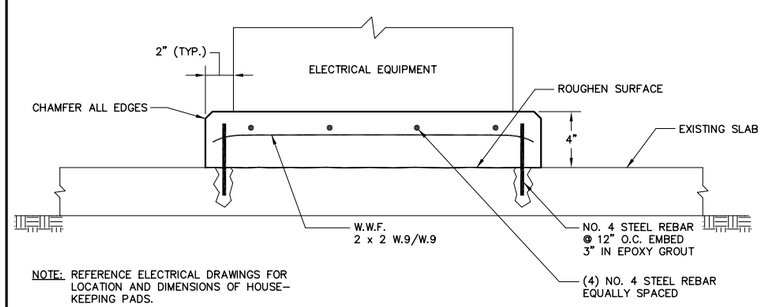

NOTE: REFERENCE ELECTRICAL DRAWINGS FOR LOCATION AND DIMENSIONS OF HOUSE–KEEPING PADS.

5 HOUSEKEEPING PAD DETAIL

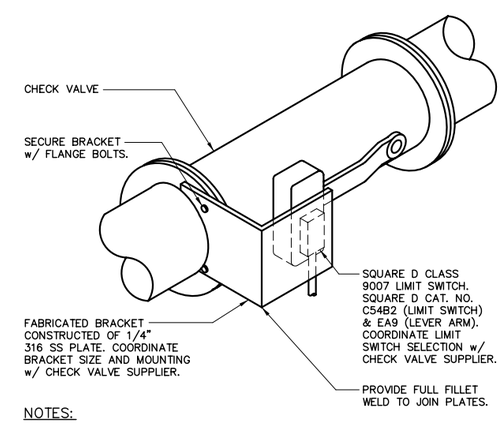

NOTES:

1. GROUND ALL EDGES SMOOTH.
2. SECURE SWITCH TO BRACKET WITH 316 SS HARDWARE.
3. LIMIT SWITCH CONTACT SHALL ACTUATE WHEN CHECK VALVE IS CLOSED. ADJUST ACTUATION POINT AFTER INSTALLATION.

6 CHECK VALVE LIMIT SWITCH DETAILS

J&A Associates
Engineers and Managers, Inc.
4900 Manatee Avenue West, Suite 203
Bradenton, FL 34209
Phone 941-254-7901 Fax 941-254-7902
© 2012 J&A ASSOCIATES ENGINEERS AND MANAGERS, INC.

NO.	REVISIONS	DATE	BY

PROFESSIONAL ENGINEER: BOB E. HALLMAN, PE REGISTRATION NO. 20761
DATE:
SCALE:
DESIGNED BY: STK
DRAWN BY: RWB
CHECKED BY: BEH

ELECTRICAL DETAILS

Engineering Design Technologies Corp.
P.O. Box 152403
Tampa, FL 33684-2403
813.289.8080
813.282.9184 FAX
engineering@edt1.com
Certificate of Authorization Number: 4795

ENGINEER OF RECORD: BOB E. HALLMAN, PE FLORIDA REGISTRATION NO. 20761

HFC AWTP RCW PUMP STATION IMPROVEMENTS (ATLAS K-13)

DATE 01/06/2014
PROJECT NUMBER 31021JA
SHEET NUMBER E-11

CONDUIT NO.	SECONDARY RUN OR CIRCUIT NO.	FROM	TO	COND. SIZE	NO. SEALS	NO. WIRES	WIRE SIZE	WIRE MARKING COLOR	WIRE MARKING WIRE NO.	PURPOSE OF CIRCUIT	REMARKS
M100A		EXISTING SWITCHGEAR 84 (BUS #2)	PROPOSED MCC-RW (BUS #2)	3"	–	3	350 KCMIL			PROPOSED MCC-RW BUS #2 POWER	
						1	#4/0 GND.				
M100B		EXISTING SWITCHGEAR 84 (BUS #2)	PROPOSED MCC-RW (BUS #2)	3"	–	3	350 KCMIL			PROPOSED MCC-RW BUS #2 POWER	
						1	#4/0 GND.				
M100C		EXISTING SWITCHGEAR 84 (BUS #2)	PROPOSED MCC-RW (BUS #2)	3"	–	3	350 KCMIL			PROPOSED MCC-RW BUS #2 POWER	
						1	#4/0 GND.				
M100D		EXISTING SWITCHGEAR 84 (BUS #2)	PROPOSED MCC-RW (BUS #2)	3"	–	3	350 KCMIL			PROPOSED MCC-RW BUS #2 POWER	
						1	#4/0 GND.				
M101A		EXISTING SWITCHGEAR 84 (BUS #1)	PROPOSED MCC-RW (BUS #1)	3"	–	3	350 KCMIL			PROPOSED MCC-RW BUS #1 POWER	
						1	#4/0 GND.				
M101B		EXISTING SWITCHGEAR 84 (BUS #1)	PROPOSED MCC-RW (BUS #1)	3"	–	3	350 KCMIL			PROPOSED MCC-RW BUS #1 POWER	
						1	#4/0 GND.				
M101C		EXISTING SWITCHGEAR 84 (BUS #1)	PROPOSED MCC-RW (BUS #1)	3"	–	3	350 KCMIL			PROPOSED MCC-RW BUS #1 POWER	
						1	#4/0 GND.				
M101D		EXISTING SWITCHGEAR 84 (BUS #1)	PROPOSED MCC-RW (BUS #1)	3"	–	3	350 KCMIL			PROPOSED MCC-RW BUS #1 POWER	
						1	#4/0 GND.				
M102		PROPOSED MCC-RW (BUS #2)	EXISTING PUMP 4 AFD	3"	–	3	350 KCMIL			EXISTING PUMP 4 AFD POWER	
						1	#3 GND.				
M103		PROPOSED MCC-RW (BUS #2)	EXISTING PUMP 2 AFD	3"	–	3	350 KCMIL			EXISTING PUMP 2 AFD POWER	
						1	#3 GND.				
M104		PROPOSED MCC-RW (BUS #1)	EXISTING PUMP 3 AFD	3"	–	3	350 KCMIL			EXISTING PUMP 3 AFD POWER	
						1	#3 GND.				
M105		PROPOSED MCC-RW (BUS #1)	PROPOSED PUMP 1 AFD	3"	–	3	350 KCMIL			PROPOSED PUMP 1 AFD POWER	
						1	#3 GND.				
M106		PROPOSED PUMP 1 AFD	EXISTING PULL BOX	3"	–	3	350 KCMIL			PROPOSED PUMP 1 POWER	EXISTING 3" CONDUIT
						2	#10			MOTOR SPACE HEATER POWER	
						1	#3 GND.				
M107		EXISTING PULL BOX	PROPOSED PUMP 1	3"	–	3	350 KCMIL			PROPOSED PUMP 1 POWER	PROVIDE LIQUIDTIGHT FLEXIBLE NON-METALLIC CONDUIT CONNECTION TO MOTOR
						2	#10			MOTOR SPACE HEATER POWER	
						1	#3 GND.				
C200		EXISTING STAR CONTROLLER PLC	PROPOSED PUMP 1 AFD	1 1/4"	–	10	#12			PROPOSED PUMP 1 AFD CONTROL/STATUS	SEE NOTE 3
						4	#12 SPARE				
						1	#12 GND.				
C201		EXISTING STAR CONTROLLER PLC	EXISTING REUSE LOCAL CONTROL PANEL	1"	–	7	#12			PROPOSED PUMP 1 AFD CONTROL/STATUS & CHECK VALVE LIMIT SWITCH STATUS	SEE NOTE 3
						2	#12 SPARE				
						1	#12 GND.				
C202		EXISTING REUSE LOCAL CONTROL PANEL	CHECK VALVE LIMIT SWITCH	3/4"	–	2	#12			CHECK VALVE LIMIT SWITCH STATUS	SEE NOTE 3
						1	#12 GND.				
A300		EXISTING STAR CONTROLLER PLC	PROPOSED PUMP 1 AFD	1"	–	2	2/C #16 SHLD.			AFD SPEED INPUT/OUTPUT	BELDEN 8719. SEE NOTE 3.
						1	1.5 PR #22 SHLD.			RS-485/MODBUS	BELDEN 3106A. SEE NOTE 3.
A301		EXISTING STAR CONTROLLER PLC	PROPOSED MCC-RW (BUS #2)	3/4"	–	2	1.5 PR #22 SHLD.			BUS 1 & BUS 2 POWER METER RS-485/MODBUS	BELDEN 3106A. SEE NOTE 3.
A302		EXISTING STAR CONTROLLER PLC	EXISTING PUMP 2 AFD	3/4"	–	1	1.5 PR #22 SHLD.			AFD 2, AFD 3 & AFD 4 RS-485/MODBUS	BELDEN 3106A. SEE NOTE 3.
A303		PROPOSED PUMP 1 AFD	PROPOSED PUMP 1 RTD JUNCTION BOX	1 1/2"	–	8	3/C #16 SHLD.			PUMP 1 RTD'S	BELDEN 8618. SEE NOTE 1.
A304		EXISTING STAR CONTROLLER PLC	EXISTING SWITCHGEAR 84	3/4"	–	2	1.5 PR #22 SHLD.			EXISTING POWER METER RS-485/MODBUS	BELDEN 3106A. SEE NOTE 3 & 4.
A305		FLOW METER TOTALIZER	FLOW METER	1 1/4"	–	1	7/C SHLD.			FLOW METER SIGNALS	CABLE PROVIDED BY FLOW METER MANUFACTURER. SEE NOTE 5.

NOTES:

1. COORDINATE PUMP RTD CONNECTIONS & JUNCTION BOX INSTALLATION w/ PUMP SUPPLIER.
2. THE SHIELD & DRAIN WIRES FOR SHIELDED CABLES SHALL BE GROUNDED AT THE EXISTING STAR CONTROLLER PLC ONLY. THE SHIELD & DRAIN WIRE AT THE END DEVICE SHALL BE NEATLY TRIMMED AND TAPED WITH 2 LAYERS OF VINYL ELECTRICAL TAPE (SCOTCH 33+).
3. PROVIDE ALL CONDUIT & CONDUCTORS ROUTED TO THE EXISTING STAR CONTROLLER PLC. CITY WILL BE RESPONSIBLE FOR TERMINATION & CONNECTIONS IN THE EXISTING STAR CONTROLLER PLC, PROGRAMMING THE EXISTING STAR CONTROLLER PLC AND PROGRAMMING THE HOST COMPUTER/HMI AS REQUIRED.
4. COORDINATE RS-485/MODBUS CONNECTIONS TO EXISTING POWER METERS WITH EQUIPMENT MANUFACTURER. PROVIDE ADDITIONAL HARDWARE AS REQUIRED.
5. COORDINATE CABLE LENGTH, NO. OF CONDUITS, DETAILS & INSTALLATION w/ FLOW METER MANUFACTURER.

J & A Associates
Engineers and Managers, Inc.
4900 Manatee Avenue West, Suite 203
Bradenton, FL 34209
Phone 941-254-7901 Fax 941-254-7902

© 2012 J&A ASSOCIATES ENGINEERS AND MANAGERS, INC.

NO.	REVISIONS	DATE	BY

PROFESSIONAL ENGINEER:
BOB E. HALLMAN, PE
REGISTRATION NO. 20761
DATE:

SCALE:
DESIGNED BY: STK
DRAWN BY: RWB
CHECKED BY: BEH

CONDUIT SCHEDULE

Engineering Design Technologies Corp.
P.O. Box 152403
Tampa, FL 33683
813.289.8080
813.282.9184 FAX
engineering@edt1.com
Certificate of Authorization Number: 4795

ENGINEER OF RECORD:
BOB E. HALLMAN, P.E.
FLORIDA REGISTRATION NO. 20761

HFC AWTP RCW PUMP STATION IMPROVEMENTS (ATLAS K-13)

DATE 01/06/2014
PROJECT NUMBER 31021JA
SHEET NUMBER
E-12

CONTRACT 13-C-00055; HOWARD F. CURREN AWTP RECLAIMED WATER PUMPING IMPS PRE-BID CONF. 4/8/14 10:00A.M.

E-Mail to **Register as a Bidder** and E-Mail All **Questions** to; **ContractAdministration@tampagov.net**

Sign-In Sheet Please Print

City of Tampa, Contract Administration Department

	Name	Organization	E-Mail OR Phone
1	*Jody Gray*	*Tampa Contract Administration Dept.*	jody.gray@tampagov.net
2	Sean Kendrick	EDT	BHALL@EDT1.COM 813.289.8080
3	JAMES M TRACEL	U.S. WATER	JTRACEL@USWATERCORP.NET 727-848-8297 x237
4	EDWARD J KIENG	U.S. WATER	TKIENG@USWATERCORP.NET 727-919-1761
5	MARK TEMPEST	ICON TECH (Yaskawa)	mtempest@icon-tech.com 813-936-2030
6	Rick Morris	COT/CAD	—
7	Mark Johnson	COT/CAD	—
8	Mike Maloy	COT/CAD	813-323-2658
9	John Babuka	Reliable Electric	813-363-1941 JOHN@RELIABLEELECTRICUSA.COM
10	MARK HRUSHT	TLC	MHRUSHT@TLCDIVERSIFIED.COM
11	ALEX ZETTEL	RTD CONSTRUCTION	BIDS@RTDCONSTRUCTION.COM
12	Krofton Owen	Sherwin Williams	SWRFP6198@SHERWIN.com
13	Ron Turner	DB Construction	turner01@tampabay.rr.com
14	Helia Yazdian	Wharton-Smith, Inc	estimatingtampa@whartonsmith.com
15	Ashley Miele	J&A Associates	ashley.miele@jaassociatesinc.com
16	Joe Spencer	COT	joe.spencer@TAMPAGOV.net
17	Courtney Kuhn	ENVIRO-Tech Systems, Inc	KUHNCA@enviro-tech.cc 863-763-3143
18	Eddie Granger	Granger Maint. & Const. Inc	eddie granger@granger maint.com
19	JACK FERRAS	COT-WASTEWATER DESIGN	JACK.FERRAS@TAMPAGOV.NET
20	MARK GATZ	BAY AREA ELECTRIC	MARK@BAYAREAELECTRICFL.COM
21	Andrew Chibani	Carter + Ver Planck	Andrew Chibani@carterverplanck.com (813) 287-0709
22			
23			
24			
25			
26			
27			
28			
29			
30			
31			
32			
33			
34			
35			
36			