City of Tampa
Jane Castor, Mayor

Contract Administration
Michael W. Chucran, Director
306 East Jackson Street, 4N
Tampa, FL 33602

Office (813) 274-8116
Fax: (813) 274-7368

ADDENDUM 5
Via E-Mail
DATE: January 3, 2020

Contract 18-C-00024 Howard F. Curren AWTP Junction Chamber No. 2 Sluice Gate Replacement

Bidders on the above referenced project are hereby notified that the following addendum is made to the Contract Documents. BIDS TO BE SUBMITTED SHALL CONFORM TO THIS NOTICE.

Item 1: The bid date is hereby changed to January 21, 2020.

Item 2: Change, on page I-1b, I-1.05 Time For Completion, second paragraph "360" to read "540".

Item 3: Delete Section 09 96 35 CHEMICAL RESISTANT COATINGS in its entirety.

Item 4: Delete Section 30 MISCELLANEOUS PIPE AND FITTINGS in its entirety.

Item 5: Replace Section 32 VALVES with the attached Section 32.

Item 6: Replace Section 35 MAGNETIC FLOW METER with the attached Section 35.

Item 7: Add the attached Section 36 PAINTING.

Item 8: Add the attached Section 67 STEEL PIPE AND FITTINGS.

Item 9: Add the attached Existing Sluice Gates Information. NOTE: The attached sluice gates information and drawings are for reference only and should not be deemed to be complete.

Item 10: Replace Mechanical Sheets 2, 3, 9, 9A, 10, 10A, 11 and 11A with the attached Mechanical Sheets 2, 3, 9, 9A, 10, 10A, 11 and 11A.

Item 11: Add the attached Mechanical Sheets 11B, 11C and 16A.

Item 12: Replace Electrical Sheets 17, 25, 26, 27, 28 and 29 with the attached Sheets 17, 25, 26, 27, 28 and 29.

All other provisions of the Contract Documents and Specifications not in conflict with this Addendum shall remain in full force and effect. Questions are to be e-mailed to Contract Administration@tampagov.net.

Jim Greiner

Jim Greiner, P.E., Contract Management Supervisor

SECTION 32 - VALVES

W-32.01 General

This section includes all valves to be used on City maintained force mains, City owned pump stations and the Howard F. Curren Advanced Wastewater Treatment Plant. Requirements of this section apply to all valves unless exceptions are shown or stated on the plans or specific provisions.

Plug valves for buried applications shall be provided with mechanical joints. Plug valves for above-ground applications shall be provided with flanged connections.

All force main valves shall be plug valves meeting the requirements of the sub-section “Eccentric Plug Valves.”

Valves 2 inches in diameter and smaller shall be all brass or bronze, except the handwheel, and shall have screwed ends. Valves 2-1/2 inches in diameter and larger shall be iron body, bronze mounted with flanged ends, except that in the smaller sizes, valves may be all bronze at the Contractor's option.

All gate, globe, and angle valves shall have rising stems, unless otherwise specified, and shall open when the nut or handwheel is turned counterclockwise. Each handwheel shall be marked with an arrow and the word "Open.” Each nut shall be marked with an arrow and shall not be greater than 24 inches in depth below finished grade.

All references to “stainless steel” or “SS” shall mean 316 stainless steel.

All valves of the same type shall be from a single manufacturer. Parts of valves of the same type and size shall be interchangeable.

All valves shall be carefully erected in their respective positions, free from all distortion and strain, and shall be packed and left in satisfactory operating condition.

W-32.02 Submittals

The Contractor shall prepare and submit for approval a complete detail drawing of all valves in accordance with the requirements of the General Provisions. At minimum the submittal shall show all proposed material types to be used as well as proposed interior and exterior coating manufacturer, coating type and proposed minimum dry film thickness.

W-32.03 Flanges

Flanges shall be cast solid and faced accurately at right angles to the axis of the casting. Flanges shall be faced and drilled and shop coated with a rust preventive compound before shipment.

Dimensions and drillings of flanges shall meet the requirements of ANSI B16.1 for working pressures of 125 pounds per square inch. Special drillings shall be provided where required.

W-32.04 Gate Valves

Except as otherwise specified, gate valves shall meet the requirements of Fed. Spec. WW-V-54, Class A, 125 pounds.

Gate valves shall have standard stuffing box seals. Bonnet bolts, studs, and nuts shall be cadmium plated. Wedging devices shall be bronze to iron or bronze to bronze as specified. Glands shall be bronze bushed; gland bolts and nuts shall be bronze.

Gate valves 2-1/2-inch diameter and larger shall be of the double disc type. Gate valves 2-inch diameter and smaller may be of the double disc or solid wedge type.

Valves with operating nuts or wheels 7 feet or more above the floor shall be provided with chains and chain wheels.

W-32.05 Globe and Angle Valves

Except as otherwise specified herein, globe and angle valves shall meet the requirements of Fed. Spec. WW-V-51, Class A, 125 pounds.

W-32.06 Hose Valves

Hose valves shall be globe or angle valves with rising stems, and rubber composition discs for cold water pressures up to 200 psi, nonshock.

Hose valves shall be all bronze or brass, except the handwheel which shall be of malleable iron. Hose threads shall conform to ANSI B2.4.

W-32.07 Check Valves

Check valves, unless otherwise specified, shall be APCO Series 100 of the horizontal, swing type designed to allow full diameter passage and to operate with a minimum loss of pressure. A Letter of Standardization has been executed for this valve. The letter states that no other valve shall be considered an “or equal” in accordance with the City’s standardization program. The “or equal” clause applies to all other equipment, unless specifically excluded by a Single Source Certificate or Letter of Standardization.

Check valves shall have body and body cover of heavily constructed cast iron meeting requirements of ASTM A48, Class 30. Check valve body shall have integrally cast-on end flanges. The flapper shall be rubber and have an "O" ring seating edge and be internally reinforced with steel. The flapper shall be easily replaced while the valve remains in place.

The exterior of the check valve shall be factory coated with an approved interior and exterior corrosion resistance coating. The exterior of the check valve shall receive a field coat as indicated for “Steel Pipe and Fittings” in the Workmanship & Materials Section titled “Painting”.

W-32.08 Pump-Check Eccentric Plug Valve

Pump-check valves, unless otherwise specified, shall meet the requirements of the sub-section for “Eccentric Plug Valves”.

The valve shall be equipped with a G-Series rotary cylinder pneumatic actuator that is properly sized for the existing compressed air system within the pump station.

Plug valves shall be Dezurik PEF (100% Port) eccentric plug valve or approved equal.

W-32.09 Eccentric Plug Valves

Plug valves shall be of the eccentric valve design and shall meet or exceed the requirements of AWWA C517 and shall be designed for 175 PSI 3’-12” and 150 PSI 14”-36”. Manufacturer’s Name shall be cast in body and Valve shall be serialized for future parts identification. Port area shall be 100% of standard pipe area. The Plug shall be Rectangular with associated Rectangular Port and shall provide dead tight shutoff when seated in the closed position. Body material shall be Cast Iron ASTM A126 Class B, Seats shall be 1/8” thick 95% Nickel and 1/2" wide for proper plug seating. Plug shall be Ductile Iron ASTM A536 and Chloroprene Faced. Bearings shall be sintered, oil impregnated permanently lubricated type 316 stainless steel, include upper and lower grit excluders to prevent grit and foreign solids from entering the bearings. Shaft seals shall be multiple V-ring type and shall be externally adjustable via an air gap and re-packable under pressure without removing the actuator or bonnet from the valve. Valves shall have interior and exterior epoxy.

Plug valves shall be nut operated (1/4 turn) 4” to 8” and gear operated 10” and larger. Both nut and gear operated valves shall have a 2-inch square nut for operation. On pump stations where the valve is 7 feet or more above the floor level, a chain and wheel shall be provided for operation.

Plug valves shall be Dezurik PEF (100% Port) eccentric plug valve or approved equal.

W-32.10 Knife Gate Valves

Valves shall be bonnetless wafer knife gate type with cast single-piece body construction. Lugged ends shall have threaded holes in accordance with ANSI B16.1 125/150 pound standards. Working pressure rating shall be 150 psi in sizes 2”-24”. Valve body and gate shall be stainless steel type 316 or as specified. Stem shall be

type 304 stainless steel. Valve shall have a round port equal to 100% of the connecting pipe. Valves shall be chloroprene resilient seated or as specified.

The body design shall have no pockets or grooves in the flow port where media can settle and adversely affect closure. The gate shall be polished to provide low thrust requirements and long packing life. The leading edge of the gate shall be beveled to assist in closure. The stem shall be outside of the body and will not contact the flowing media. Valves shall have multi-layer square packing with adjustable packing gland bolting.

All valve bodies shall be tested with water at 150% of rated pressure with no visible leakage. Assembled valves shall be tested for seat leakage with water at 40 psi applied to the back of the gate (pressure in the normal flow direction) and allowable leakage shall be as per MSS SP-81 specifications.

Valves shall be provided with a manually operated direct-mounted handwheel as specified or shown on the construction drawings. Floor stands and extensions shall be provided if specified. Valve superstructures shall be designed to allow easy field interchangeability between manual and pneumatic actuators. New superstructures shall not be required for conversion between manual and pneumatic operators.

Metal surfaces other than stainless steel shall receive a field coat as indicated for “Steel Pipe and Fittings” in the Workmanship & Materials Section titled “Painting”.

Valves shall be model GKU by DeZURIK, Inc, or approved equal.

W-32.11 Multiport Valves

Three-way and four-way valves, unless otherwise specified, shall meet the requirements of the sub-section for eccentric plug valves.

W-32.12 Solenoid Valves

Solenoid valves, unless otherwise shown or specified, shall be normally closed packless type with full area ports. The body and bonnet shall be forged brass and the solenoid core shall be stainless steel. The diaphragm shall be of synthetic rubber assuring long service life. The coils shall be designed for 115-volt, 60-hertz operation and shall be embedded in molded plastic in NEMA Type I general purpose enclosure.

W-32.13 Ball Valves for CPVC Piping

Manually operated ball valves for CPVC piping shall be CPVC ball valves having renewable Teflon ball seats and EPDM seals. Ball valves shall block in both seating directions, leaving full pressure on the opposite end of the valve. The CPVC ball valves shall be rated at not less than 150 psi working pressure at 75 degrees F, self-lubricating, and shall have socket end connectors. The ball valves shall be of true union design to

allow for inspection or removal. CPVC ball valves shall be as manufactured by Hayward Industrial Products, Inc., or equal.

W-32.14 Ball Check Valves for CPVC Piping

Ball check valves for CPVC piping shall be constructed of solid CPVC and shall have a CPVC ball. The check valve shall have EPDM O-rings and shall be capable of operating either horizontally or vertically. The check valve shall have a full flow design that provides a free open area that is equivalent to the connecting pipe size. The check valves shall have socket end connectors and shall be of the true union design to allow for inspection and removal of the valve. Ball valves for CPVC piping shall be as manufactured by Hayward Industrial Products, or equal.

W-32.15 Butterfly Valves

Butterfly valves shall meet or exceed the latest revision of AWWA Standard C504 for Class 150B butterfly valves and shall meet or exceed the requirements of this specification. Valves 12" (300mm) and smaller shall have a working pressure of 200 psi (1380 kPa). All valves shall be tested at and shall be capable of withstanding bi-directional line hydrostatic test pressures up to 225 psi (1550 kPa) without leaking. When specified, valves shall meet NSF/ANSI 61/372.

Valve bodies shall be of cast iron per ASTM A126 Class B or ductile iron ASTM A536 Grade 65-45-12.

Discs shall be offset to provide an uninterrupted 360 degree seating edge and shall be cast iron per ASTM A48, Class 40C, ductile iron ASTM A536 or 316 stainless steel ASTM A743. The disc seating edge shall be solid 316 stainless steel. Sprayed mating seating surfaces are not acceptable. The disc shall be securely attached to the valve shaft utilizing a field removable/replaceable 316 stainless steel torque screw on sizes 3-12" (80-300mm) or a tangential pin locked in place with a set screw on sizes 14-20" (350-500mm).

Valve shaft shall be type 304 stainless steel. Valve shaft seals shall be self-compensating V-type packing with a minimum of four sealing rings. One-piece molded shaft seals and o-ring shaft seals are not acceptable.

Seat shall be of Acrylonitrile-Butadiene (NBR) for water, or as required for other services, and shall be molded in and vulcanized to the valve body. The seat shall contain an integral shaft seal protecting the valve bearings and packing from any line debris. Seats vulcanized to cartridge inserts in the valve body and seats on the disc are not acceptable.

Butterfly valves shall be manufactured by DeZURIK or approved equal.

W-32.16 Testing

All valves shall be given hydrostatic shop pressure tests at twice the working pressure specified. The valves shall be tested, first by applying the hydrostatic pressure with the valve open and then with the valve closed. The valves shall be tight and secure under the test pressure.

Valves shall be tested in place by the Contractor, as far as practicable, and any defects in valves or connections shall be corrected to the satisfaction of the Engineer.

W-32.17 Painting and Coating

Plug valves shall receive a factory interior and exterior coating of Tnemec Series 141 (4 mils thick).

All other valves shall receive a factory interior and exterior coating of an approved system.

Metal surfaces other than stainless steel shall receive a field coat as indicated for “Machinery and Equipment” in the Workmanship & Materials Section titled “Painting”.

Chain wheels shall be coated by galvanizing or electroplating with zinc or cadmium. The chain shall be coated by electroplating with zinc or cadmium. Zinc electroplating shall meet the requirements of Fed. Spec. QQ-Z-325, Type II, Class 2; and cadmium electroplating shall meet the requirements of Fed. Spec. QQ-P-416, Type II, Class 2.

* * *

SECTION 35 - MAGNETIC FLOW METER

W-35.01 GENERAL

The magnetic flow meter system, including the flow element (sensor) and remote signal converter (transmitter), shall be of the WaterMaster series of products manufactured by ABB Ltd. A letter of standardization for the meter manufacturer has been included in the Contract documents and no other manufacturer will be considered.

W-35.02 INSTRUMENT

Magnetic flow meter system shall be of the microprocessor-based, high impedance electromagnetic induction type and produce a DC pulsed signal directly proportional to and linear with the liquid flow rate. Complete zero stability shall be an inherent characteristic of the flow meter system. The magnetic flow meter system shall include a metering tube, signal cable (100 feet), and signal converter/transmitter. The magnetic flowmeter should be Verimaster enabled. The metering tube shall be constructed of 304 stainless steel with flanged connections, have at least two diametrically opposed self-cleaning electrodes compatible with the process fluid (sewage sludge), have a nonconductive liner material rated for the process fluid and be suitable for the intended purpose in all other respects. The meter housing shall be rated for IP68/NEMA 6P, continuous submergence, and have an exterior coating consisting of a corrosion resistant finish. The manufacturer shall supply and connect the signal cable to the flow sensor at the factory using best practices to ensure a waterproof assembly. The manufacturer shall prepare the other end of the cable so that it is ready to be terminated at the remote signal converter/transmitter in the field. The metering tube shall be provided with matching 304 stainless steel grounding rings. The flow meter shall have an operable measurement range of 1000:1, and shall have bi-directional measurement capability with forward, reverse and net totalization.

The signal converter/transmitter shall use a DC pulsed technique to drive bi-polar flux-producing coils and convert the DC pulse signal from the tube to a 4-20 MA DC signal. The signal converter/transmitter shall be microprocessor based, and have a LCD back-lit display with forward/reverse/net flow register, flow rate indication register, and alarm monitoring icon housed in an IP65/NEMA 4X enclosure. The transmitter shall provide empty pipe detection, have an integral self-test feature to verify proper operation of the electronics, provide high and low alarms, and an automatic zero adjustment.

The magnetic flow metering system shall be hydraulically calibrated by direct volumetric and weight standards at a facility which is traceable to National Institute of Standards Technology or NAMAS. A real-time computer generated Calibration Test Report shall be provided containing the actual flow as measured by the standard, the flow as indicated by the magnetic flow meter system, and the percent of difference. The calibration facility shall be certified to 0.4% accuracy.

The magnetic flow metering system shall conform to the following technical specifications:

Flow Tube:	IP68/NEMA 6X Designed for continuous submergence
Transmitter:	IP65/NEMA 4X Remote signal converter
Accuracy:	0.40% of reading or +/- 0.003 ft/sec up to a maximum velocity of 49ft/sec

Repeatability:	0.05% or +/- 0.008ft/sec.
Rangeability:	1000:1
Temperature:	Up to 80°C.
Power:	90 to 260VAC. Power consumption <20VA with transmitter
Output:	4 to 20 MADC into 800ohms. Isolated and fully programmable Two pulse/frequency outputs

W-35.03 FLOW METERING TUBE

The magnetic flow elements shall operate by means of pulsed DC electromagnetic, volumetric flow rate measurement. The flow meter shall be insensitive to changes in the viscosity and density of the fluid that is being measured. The flow meter shall be inherently designed for continuous zero stability. The output signal shall be highly accurate and directly proportional to the fluid flow rate. The flow meter shall be designed and manufactured to international quality procedures (ISO 9001).

The flow meter tube shall be constructed of type 304 stainless steel. The magnetic field generating coils shall be located within the metering tube. The coils shall be potted with an epoxy-base compound. An insulating interior liner of hard rubber shall be inserted and turned out against the flange faces. The metering tube shall be capable of withstanding a test pressure of at least 75 PSI. The flow meter shall have 150 pound ANSI or AWWA Class D carbon steel flanges and built in grounding electrodes. The flow meter shall be rated for continuous submergence to a depth of 30 feet in accordance with the requirements of IP68. The metering tube shall have an internal hard rubber liner that is certified for use with raw sewage. The flow meter electrodes shall be of the protruding self-cleaning design made of type 316 stainless steel. Removable electrodes or ultrasonic cleaners are not acceptable. The input impedance of the electrodes shall be greater than ten million (10,000,000) mega ohms to achieve a meter accuracy that is completely unaffected by coatings. The laying length shall be the current standard for magnetic flow meters. 316 stainless steel grounding rings shall be included with the flow metering system. The grounding rings shall insert between both flanges and shall not interfere with the internal flow profile. All gaskets for proper metering tube installation shall be included. The gaskets shall be made of a material suitable for raw sewage service and shall not be affected by any petroleum products or byproducts.

The flow meter shall be hydraulically calibrated in a laboratory that is internationally accredited by an agency such as NIST or NAMAS. The method of the initial calibration shall utilize volume and weight testing. All components of the device being provided as a result of these specifications shall be tested as a complete system. The results of this testing shall be certified by the agency and documentation of the test shall be provided with the equipment.

The flow meter accuracy shall be guaranteed with no more than five straight unobstructed pipe diameters upstream and three pipe diameter downstream of the flow meter. The accuracy of the flow meter as a system shall be four tenths (0.4) percent of the flow rate regardless of flow direction. The repeatability of the flow meter shall be a minimum of five one-hundredths (0.05) percent of the flow rate.

W-35.04 FLOW TRANSMITTER

The signal converter for the flow meter shall be housed in an IP65/NEMA 4X enclosure. This enclosure shall be suitable for pipe stand or wall mounting.

The signal converter shall be provided with a universal switching power supply. The range of this power supply shall be from 95 to 240 volts AC at 40 to 440 hertz. This power supply shall provide the necessary output to the signal converter and the flow meter's magnetic coils. The power supply shall have an inherent system to protect the electronics from lightning and/or power surges.

The signal converter electronics shall be microprocessor based. The converter shall provide an output of 4 to 20 milliamps at impedances of zero to 800 ohms. This output signal shall be directly proportional to the rate of flow through the meter. The signal converter shall have a second output for remote totalization. This output shall be a pulsed open collector capable of 800 HZ, at less than 35 VDC and 250 milliamps. The pulse width shall be software adjustable to match the input requirements of the totalizer. The range of the pulse width shall be from thirty-two one-thousandths (0.032) to two thousand (2000) milliseconds with a weighing factor range from one one-thousandths (0.001) to one thousand (1000).

The input impedance shall be greater than 10,000,000 megohms. The input span shall be continuously adjustable by means of a keypad with a velocity range from five tenths (0.5) to thirty (30) feet per second. The system supplied shall not require circuit or component changes to achieve calibration changes. The signal converter shall be designed for use with the flow meter. The system shall not require recalibration when signal converters are changed.

The signal converter shall have a local display. This display shall be calibrated in engineering units and provide instantaneous flow rates and totals. This display shall be a liquid crystal backlit screen with easily readable representations of the configuration and flow rate. The display shall offer the flow rate in either a percentage or in direct engineering units. This option shall be selectable at the local display. The display shall also provide a real time total flow indication. All configuration information, system adjustment entries and error messages shall be represented in clear, easy to understand terms. The internal program shall detect and reject incorrect entry values. The rejection of these incorrect entries shall be displayed as error messages on the screen. Failure of the signal converter shall be displayed as an error message. A failure of the converter shall trigger a contact that provides an output for a remote failure alarm. The display shall not require a book, manual or other documentation to translate diagnostic coded error messages.

The signal converter shall have integral zero return capability. This function shall be fixed at four milliamps. The zero return function shall be activated by an external contact being closed.

The range setting of the signal converter shall be adjustable through its entire range from zero to one hundred (100) percent of the flow meter's capacity. This range and other adjustable settings shall be represented on the local display screen.

The signal converters software shall include an integral self diagnostic program. This program shall continuously monitor operational modes and alarms, as well as, electrode reference voltage for indications of flow meter coil failures. Failure of the flow meter as detected by this software shall trigger the zero return function and the remote alarm contact. The software shall also include an algorithm for the reduction of noise that is generated by any other process equipment.

The signal converter shall have an operating temperature range from 30 to 150 degrees Fahrenheit. A one degree Fahrenheit change in the ambient temperature shall result in a change in the output reading of the flow meter that is less than one one-hundredths (0.01) percent of the flow reading. A 10% change in the supply voltage shall result in less than a two tenths (0.2) percent change in the output reading of the flow meter.

* * *

SECTION 36 - PAINTING

W-36.01 General

Painting includes furnishing all labor, materials, and services to paint all structures and equipment specified and required to complete the work, including, but not limited to, the following: preparation of surfaces; field painting of existing and proposed structures, piping, conduit, ductwork and equipment as specified, and the marking of existing piping and electrical conduit. The work shall include furnishing samples of paints and color charts.

Paint and other materials shall be of the type and quality of the manufacturer on which the coating schedule is based. All coats of paint for any particular surface and thinners used shall be from the same manufacturer. The treatment of the surface to be painted and the application of paint shall be in accordance with the instructions of the manufacturer and as approved by the Engineer. The colors of paints shall be as approved by the Engineer. Specimens, approximately 8 by 10 inches in size, shall be prepared and submitted to the Engineer. The minimum number of specimen custom mixed colors submitted shall be 6 not including color coding colors. Only paint of approved manufacturers shall be delivered and stored at the site.

All painting shall be in accordance with the schedules included in this specification. A supplementary schedule of paint products shall be submitted, with mil thickness, to cover all paint applied. The schedule shall be in accordance with the recommendations of the manufacturer of the paint. The total mil thickness of all coatings shall be not less than the schedule included in this section.

W-36.02 Delivery and Storage

Paints, stains, varnish, or ingredients of paints to be mixed on the job shall be prepared, packed and labeled, and guaranteed by an approved manufacturer. All material shall be delivered to the site in original, unbroken containers.

The manner of and place for storing the painting materials at the site shall be as approved by the Engineer. The storage space shall be kept clean at all times. Every precaution shall be taken to eliminate fire hazards.

W-36.03 Surface Preparation

Prior to painting, all surfaces shall be prepared and cleaned in strict accordance with the paint manufacturer's recommendations and as directed by the Engineer. Surfaces shall be dry before any paint is applied. Special surface preparation work shall be as directed by the manufacturer of the paint specified to be applied to the surface.

Metal Surfaces:

This includes all exterior and interior steel surfaces and all nonferrous metals. This applies to structural and miscellaneous steel, motors, designated housings and protective guards, piping, valves, stairs, and in general, all surfaces to be painted as designated in these specifications.

All surfaces shall be cleaned in accordance with Steel Structures Painting Council standards SSPC - SP1 Solvent Cleaning for removal of grease and oil. This standard allows for pressure washing, detergent cleaning, etc. Additional rust, loose paint, loose mill scale, etc., shall be removed in accordance with SSPC - SP2 Hand Tool Cleaning or SSPC - SP3 Power Tool Cleaning. All welds, beads, blisters or protuberances, other than identification markings shall be ground smooth. Pits and dents shall be filled with a suitable product as approved by the Engineer, and other imperfections shall be removed. Painted edges shall be sanded smooth with adjacent bare metal surfaces.

Where aluminum surfaces come in contact with incompatible metals, lime, mortar, concrete or other masonry materials, these areas shall be given two coats of asphalt varnish conforming to Fed. Spec. TT-V-51F.

Concrete and Wood Surfaces:

Surface preparation of all exterior concrete and wood surfaces shall be pressure washed to remove cobwebs, dirt, dust, and other surface contaminations. Mildew shall be treated with a 22% chlorine solution or otherwise by mixing equal parts solution bleach and water to the affected area. Loose paint and other defects shall be removed by hand; brushing, sanding, chipping or other hand tools or by power; brushes, impact tools, grinders, sanders or other power tools or by any combination thereof. Painted edges shall be sanded smooth to match adjacent bare surfaces.

All interior concrete and wood surfaces including ceilings, walls, and floors shall be cleaned similar to SSPC - SP1 Solvent Cleaning standards. Loose paint and other defects shall be removed by hand; brushing, sanding, scraping, chipping or other hand tools or by power; brushes, impact tools, grinders, sanders or other power tools or by any combination thereof. Painted edges shall be sanded smooth to match adjacent bare surfaces.

Priming shall be performed with Porter Acri-Pro 100, 100% Acrylic, or equal. First and second coats shall be performed with Porter Acri-Shield, 100% Acrylic, or equal. Concrete, concrete masonry, and wood shall be thoroughly dry prior to painting."

W-36.04 Coatings

All paints and similar materials shall be mixed in galvanized iron pans or pails or other approved containers of adequate capacity. All paint shall be stirred thoroughly before being taken from the containers, shall be kept stirred while using, and all ready-mixed paint shall be applied exactly as received from the manufacturer without addition of any kind of drier or thinner, except as specified or as permitted or directed by the Engineer. Successive coats of paint shall be tinted to make various coats easily distinguishable. Undercoats of paint shall be tinted to the approximate shade of the final coat of paint. The paint shall be a minimum temperature of 60 degrees F before application.

Only skilled painters shall be used on the work, and specialists shall be employed where required. Paint shall be applied by brush, roller, or sprayer in accordance with the manufacturer's recommendation. Finished surfaces shall not show brush marks or other irregularities. Top and bottom edges of doors shall be painted. Undercoats on hollow metal work shall be thoroughly and uniformly sanded with No. 00 sandpaper or equal abrasive to remove all surface defects and provide a smooth, even surface.

Painting shall be a continuous and orderly operation to facilitate adequate inspection. All paint application methods shall be in accordance with the instructions of the paint manufacturer and as approved by the Engineer. Access panels, pipes, pipe covering, ducts, and other building appurtenances built into or adjoining walls to be painted shall be painted the same color as adjacent walls, unless otherwise directed by the Engineer. Hardware and accessories, fixtures, and similar items placed prior to painting shall be removed or protected during painting and replaced on completion of painting. All wall surfaces to be concealed by equipment shall be painted before installation of the equipment.

Areas under and adjacent to painted work shall be fully protected at all times and dripped or splattered paint shall be promptly removed. Painting shall not be done when the temperature is below 60 degrees F, or in dust-laden air, or until moisture on the surface has completely disappeared. If necessary, sufficient heating and ventilation shall be provided to keep the atmosphere and all surfaces to be painted dry and warm until each coat of paint has hardened. Any painting found defective shall be removed and repainted or touched up as directed by the Engineer.

Coatings must be allowed to cure before being recoated or placed into service. Drying time requirements recommended by the manufacturer should be followed exactly.

The final colors shall be as noted on the color schedule.

Coverage shall be complete. When color on undercoats shows through the final coat of paint, the work shall be covered by additional coats until the paint is of uniform color and appearance and coverage is complete, at no additional cost.

Rooms or areas being painted shall be supplied with sufficient temporary ventilation during painting operations to keep the atmosphere safe from harmful or dangerous fumes and harmful dust levels for personnel.

All application tools and equipment shall be in good working order and suitable for proper applications. It shall be the Contractor's responsibility to ensure that no paint mist or spatter falls or blows to other objects, vehicles, equipment, buildings, etc.

Coating Schedule:

All painting shall be in accordance with the following schedule. The number of coats shall not be less than the number shown on the schedule.

COATING SCHEDULE (NEW)					
			Coats		
Surfaces	**SHOP COAT**	**Primer**	**1ST**	**2ND**	**3RD**
Aluminum	NA	B	E	NA	NA
Electrical Conduit	NA	B	E	NA	NA
Steel Pipe, Valves, and Fittings	C	Shop	C	E	NA
Galvanized Steel	NA	B	E	NA	NA
Ductile Iron Pipe, Valves, and Fittings	A	Shop	C	E	NA
Miscellaneous Steel and Ironwork	C	Shop	C	E	NA
Machinery, Interior, and Nonsubmerged	Shop Standard	I	E	NA	NA
Exterior Concrete or Masonry	NA	H (CMU)	F	G	NA

COATING SCHEDULE (PREVIOUSLY PAINTED)					
			Coats		
Surfaces	**Spot Coat Bare Surface**	**Full Prime Coat**	**2nd**		
Aluminum	I	I	E		
Electrical Conduit	I	I	E		
Steel Pipe, Valves, and Fittings	I	I	E		
Galvanized Steel	I	I	E		
Ductile Iron Pipe, Valves, and Fittings	I	I	E		
Miscellaneous Steel and Ironwork	I	I	E		
Machinery, Interior, and Nonsubmerged	I	I	E		
Exterior Concrete or Masonry	H (CMU) or F (Concrete)	F	G		

The designations in the following list are given solely for the purpose of indicating the type and quality of materials desired. Approved equivalent material of other manufacturers may be substituted. All coats of paint for any particular surface shall be from the same manufacturer.

ALPHABETICAL DESIGNATIONS OF PRODUCTS		
Symbol	**Product Name and Number**	**Minimum Dry Film Thickness Mils per Coat**
A	Tnemec N140 Pota-Pox II	3.0-5.0
B	Tnemec N69 Polyamidoamine Epoxy	2.5-3.5
C	Tnemec N69 Polyamidoamine Epoxy	4.0-6.0
D	Tnemec Series 446 Perma-Shield	5.0 - 7.0
E	(Above Grade) Tnemec 1074U Endurashield (Below Grade) Tnemec Series 446 Perma-Shield	3.0-5.0 5.0 – 7.0
F	Porter Acri-Pro 100, 100% Acrylic	1.2
G	Porter Acri-Shield, 100% Acrylic	1.4
H	Block Filler	85 -100 SF / Gal
I	Tnemec 135 Chembuild	3.0-5.0

W-36.05 Safety

The Contractor shall be responsible for exercising all necessary precautions to ensure that no accidents or damage to personnel, equipment, or buildings shall occur. The Contractor shall further determine any special operations which could influence the safe workmanship of his personnel with respect to electrical, mechanical, or chemical fumes or fire hazard situations.

When painting in confined areas or otherwise in areas where explosive fumes or gases need to be ventilated, the Contractor shall use suction type fans designated specifically for the safe

removal of explosive fumes or gases, and all equipment involved shall meet all OSHA (Occupational Safety Hazard Act) requirements and MSHA (Mine Safety and Health Administration) approved. The Contractor shall be responsible in all respects for the safe conduct of his personnel when using any of the rigging or equipment involved in the accomplishment of the work specified herein.

W-36.06 Cleaning

The Contractor shall touch up and restore any damaged finish. Paint or other finishes spilled, splashed, or splattered shall be removed from all surfaces. Care shall be taken not to mar any surface finish or item being cleaned.

* * *

SECTION 67 - STEEL PIPE AND FITTINGS

W-67.01 General

Steel pipe and fittings include all wrought and fabricated steel pipe, stainless steel pipe, and fittings therefor. Steel pipe shall be used only where specifically shown or specified.

Completely detailed working drawings shall be submitted by the Contractor for approval in conformance with the requirements of the General Provisions. Such drawings shall show piping layouts and contain schedules of all pipe, fittings, valves, expansion joints, hangers and supports, and other appurtenances. When any of the steel pipeline work is of special design, such work shall be shown in large detail and be completely described and dimensioned.

W-67.02 Pipe Standards

Dimensions of steel pipe shall conform to ANSI B36.10, unless otherwise specified, shown, or required. Pipe 12 inches and smaller shall be not less than Schedule 40. Pipe 14 to 18 inches inclusive shall be not less than Schedule 30. Pipe 20 through 36 inches shall have a wall thickness of not less than 3/8 inch. Pipe larger than 36 inches shall have a wall thickness of not less than 1/2 inch.

Steel pipe 24 inches in diameter and smaller shall meet the requirements of ASTM A 53.

Steel pipe larger than 24 inches in diameter shall meet the requirements of AWWA C200, unless otherwise specified, shown, or required. Pipe conforming to AWWA C200 fabricated from plates shall meet the requirements of ASTM A 283 Grade B with not more than two longitudinal seams and with girth seams not less than 7 feet apart. Pipe conforming to AWWA C200 mill pipe shall be made with Grade B steel and spiral welded with inside and outside (double) fusion butt welds. All pipe shall be hydrostatically shop tested in accordance with AWWA C200 to the test pressure determined by the formula in Subsection 3.5 of AWWA C200. The Contractor shall provide an affidavit of compliance for all pipe and fittings furnished under AWWA C200. Stainless steel pipelines shall not be painted.

Steel pipe, including fabricated pipe, shall be furnished in the longest lengths commercially available unless otherwise shown, specified, or required. Pipe shall have the manufacturer's name, initials, or trademark rolled into the surface and the year of manufacture shall be suitably marked on the pipe.

W-67.03 Welding

Welding of pipe joints where shown, specified, permitted, or required shall meet the requirements of ANSI B31.1, Code for Pressure Piping, unless otherwise specified. Pipe and fittings with a wall thickness of 3/16 inch and greater shall have ends beveled for welding. All welding on steel pipelines shall be performed by certified welders having current certificates conforming to requirements of the ANSI Code. Such certification shall be submitted to the Engineer before proceeding with any pipe welding.

Steel pipelines, with interior lining, shall be shop welded. No field welding on such pipelines will be permitted unless authorized in writing by the Engineer. Steel pipelines shall be shop welded and fabricated complete which includes fittings, lugs, anchors, supports, flanges, and like items, ready for field assembly before linings, as specified, are applied. Pipeline lining, where specified, shall include pipe, fittings, and specials.

W-67.04 Sleeve-Type Couplings

Except where standard solid sleeves or split sleeves are shown or specified, sleeve-type coupling for steel pipe shall be Style 38 couplings as made by Dresser Industries, Inc., or Type 411 as made by Smith-Blair, or equal. Gaskets shall be of molded rubber, Dresser Plain Grade 27, Smith-Blair 003, or equal. Middle rings shall be without a pipe stop and shall be at least 1/4 inch thick and 5 inches wide for 8-inch and smaller pipe, 3/8 inch thick and 7 inches wide for 10-inch through 30-inch pipe, and 1/2 inch thick and 10 inches wide for 36-inch and larger pipe with follower rings of appropriate thickness, unless otherwise shown or specified.

Sleeve-type couplings shall be shop coated with Dresser Red "D" Shop-Coat, Smith-Blair Standard Blue Shop Coat, or equal, nontoxic material compatible with the finished coatings specified.

The ends of pipe and fittings which are to have sleeve-type couplings shall be left free of shop coat or field coat for a distance of 12 inches, until after installation, when the pipe and couplings exposed to view shall be field painted as specified or directed.

W-67.05 Harnessing

The steel pipe joint harness shall consist of two or more steel tie rods set diametrically opposite, generally on the horizontal diameter of the pipe, extending across the joint from fabricated bent steel plate lugs welded to the pipe at either side of the joint. Steel plates used in the fabrication of bent plate lugs shall conform to ASTM A 242. Lugs and welds shall be designed to develop the full strength of the tie rods.

Harness tie rods and nuts shall be of mild steel meeting the requirements of ASTM A 307 Grade B. Nuts shall be hexagonal and have a standard chamfer on the back face.

W-67.06 Expansion and Flexible Couplings

Ample provision shall be made for flexibility in all pipelines to compensate for expansion. Expansion devices shall be adequate to allow the lines to expand and contract freely without injury to any part of the piping system. The devices may be in the form of expansion joints, expansion couplings, swivel or swing joints or pipe bends, and include such anchors as may be shown, specified, or required to make the devices effective. If expansion devices are not required, all runs of pipe subject to change in length shall be fabricated shorter than their theoretical length to the extent that there may be freedom to expand without increasing the stresses imposed when cold.

Expansion joints shall be provided with adequate tie rods to limit the axial movement at the specified test pressures, except where otherwise noted or specified.

W-67.07 Handling

During loading, transportation, and unloading, extraordinary care shall be taken to prevent injury to the pipes and coating. Loading and unloading shall be done slowly with each pipe under perfect control at all times. Under no circumstances shall a pipe be dropped. Suitable skids or blocks shall be placed under each pipe in the shop and the pipe shall be securely wedged during transportation to ensure the least possible injury to pipe, lining, and coating.

Pipe shall be handled with equipment such as stout canvas slings and wide padded skids, designed to prevent damage to the coating. The use of bare cables, chains, hooks, metal bars, or narrow skids in contact with the coating will not be permitted. All pipe handling and hauling equipment shall meet the approval of the Engineer before use. The ends of coated pipe shall be protected with roofing paper to prevent damage to the coating during transit. Abrasions and injuries shall be promptly and efficiently repaired.

Pieces shall be examined for defects and no piece shall be installed which is known to be defective. If any defective piece should be discovered after having been installed, it shall be removed and replaced with a sound one in a satisfactory manner by the Contractor at his own expense.

W-67.08 Erection

Steel pipelines shall be furnished, fabricated, erected, and otherwise installed to the lines, elevations, locations, and dimensions shown, specified, and required for a complete installation. In all existing structures and new structures as applicable, the Contractor shall verify all dimensions shown on the Plans and shall take such field dimensions that may be necessary to properly fabricate, locate, erect, connect to existing work, and otherwise install all steel pipelines, pipe supports, pipe anchors, and structural frames required for steel pipelines. Where temporary supports are used, they shall be sufficiently rigid to prevent shifting or distortion of the pipe. Expansion devices shall be properly adjusted so that pipelines will be tight during expansion and contraction.

For sleeve type couplings, diametrically opposite bolts shall be equally tightened on the connection so that the gaskets will be brought up evenly all around the pipe. Final tightening shall be done with torque wrenches set for the torque recommended by the coupling manufacturer.

W-67.09 Hangers and Supports

All steel pipelines shall be permanently erected and supporting devices shall be furnished and installed as specified on the construction plans.

W-67.10 Linings and Coatings - General

In general, all linings and coatings, except coatings applied as field painting, shall be shop applied.

The interior of the proposed steel pipe shall be cement mortar lined (CL).

All bolts, nuts, couplings, and the like shall be well coated after the joint has been made.

Painting shall conform to the Workmanship and Materials section headed "Painting."

* * *

43869-2

ORDER ACKNOWLEDGEMENT

DATE	11/19/74
OUR ORDER	43869-2 084001 28A4002 082003
YOUR ORDER	TJV-74-03
TOTAL PRICE	$833,000.00
SOLD TO	D.F.S. CONSTRUCTION CO. 23356 P O BOX 4949 CLEARWATER, FLORIDA
SHIP TO	LATER
PROJECT	HOOKERS POINT S.T.P. TAMPA, FLORIDA
PAY TERMS	90%-45 DAYS REMAINDER UPON ACCEPTANCE BY OWNER OR 360 DAYS AFTER FINAL SHIPMENT WHICHEVER OCCURS FIRST.

WE ARE SUPPLYING THE FOLLOWING EQUIPMENT.

ITEM#1 - SCREEN AND GRIT BUILDING - GATES SG-SG-1,2,3, & 4 PLAN SHEET M-18 AND M-21

FOUR (4) - 18" X 84", SERIES HY-Q-125, FLANGE FRAME, SELF-CONTAINED, FLUSH BOTTOM CLOSING SLUICE GATES. GATES ARRANGED FOR NON-RISING STEM OPERATION, CAST IRON CONSTRUCTION, FULLY BRONZE MOUNTED, SUITABLE FOR A 5 FT. SEATING OR UNSEATING HEAD. STAINLESS STEEL OPERATING STEM. ELECTRIC YOKE MOUNTED OPERATOR SIZED FOR THE PROPER OPERATION OF THE GATE AT 12" PER MINUTE AND IN FULL ACCORDANCE WITH THE SPECIFICATIONS. WALL THIMBLE 12" DEEP, "F" SECTION. BRONZE STUDS, NUTS AND ANCHOR BOLTS. ESTIMATED WEIGHT, HEAVIEST PIECE 3,200 LBS. ESTIMATED WEIGHT, EACH INSTALLATION 9,550 LBS.

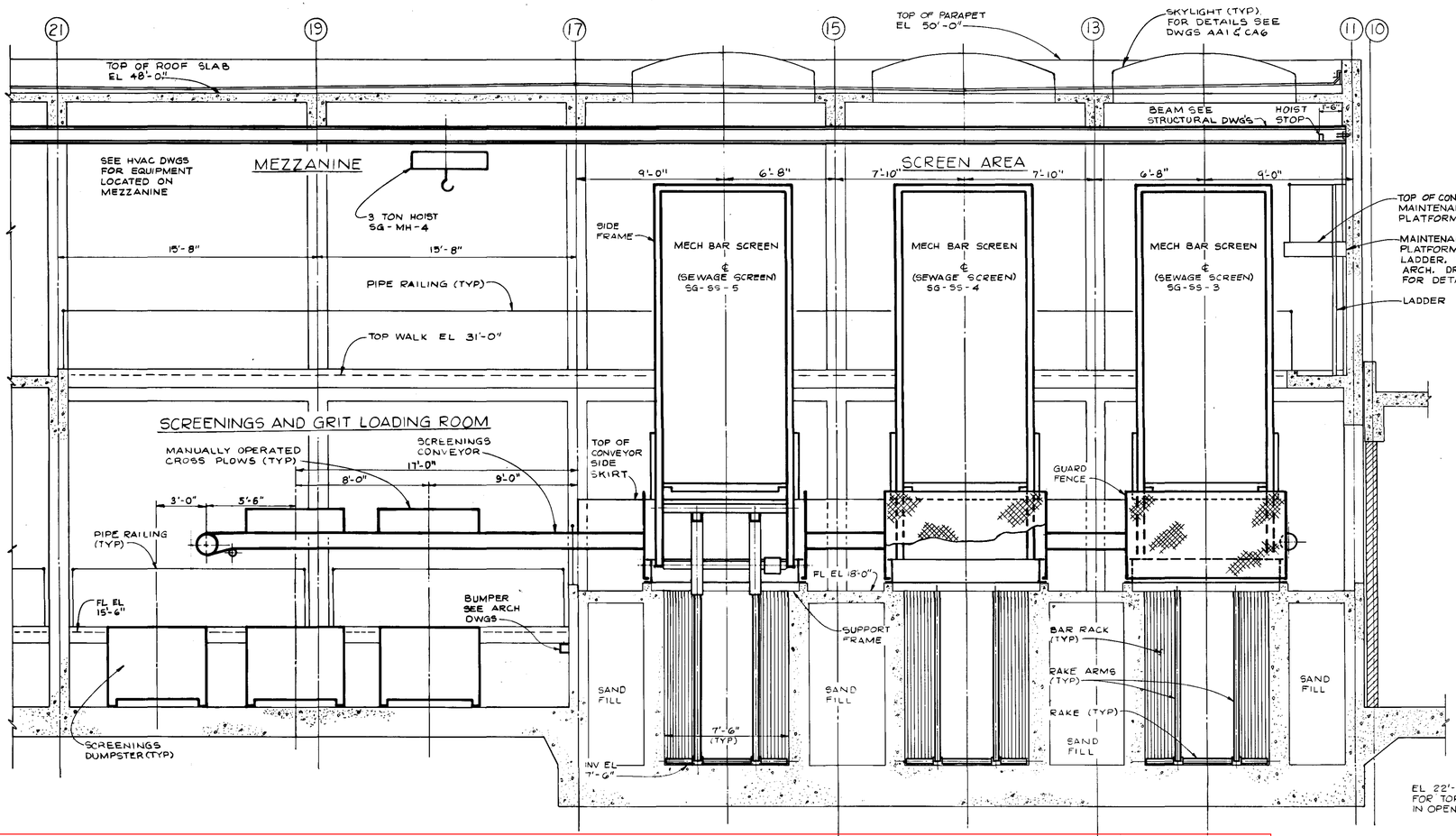

SECTION 4/CM1,2

SCALE: 1/4" = 1'-0"

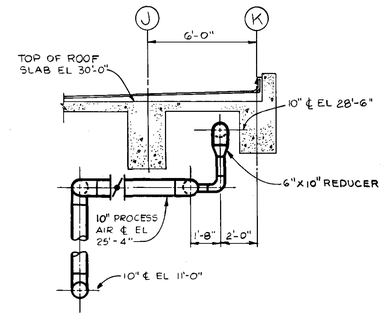

SECTION 5/CM2

SCALE: 1/4" = 1'-0"

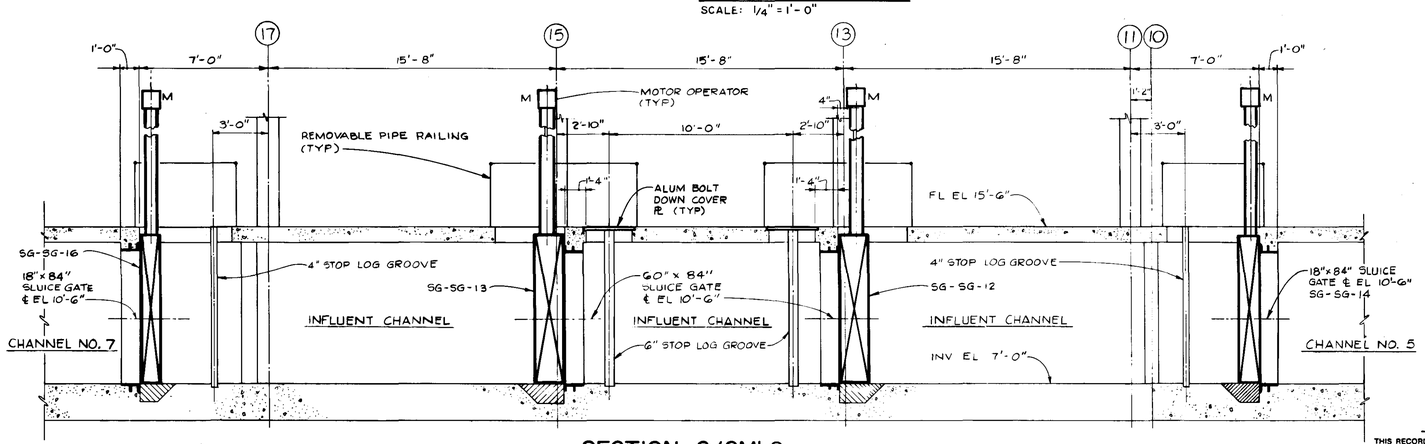

SECTION 6/CM1,2

SCALE: 1/4" = 1'-0"

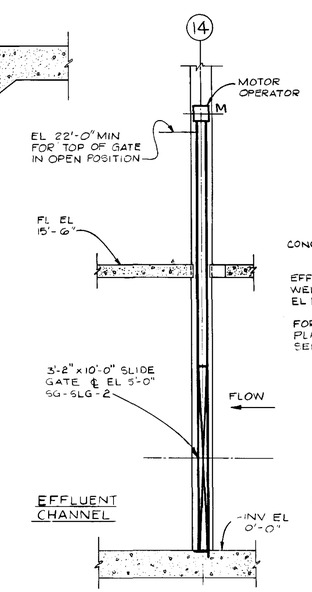

SECTION 7/CM1,2

SCALE: 1/4" = 1'-0"

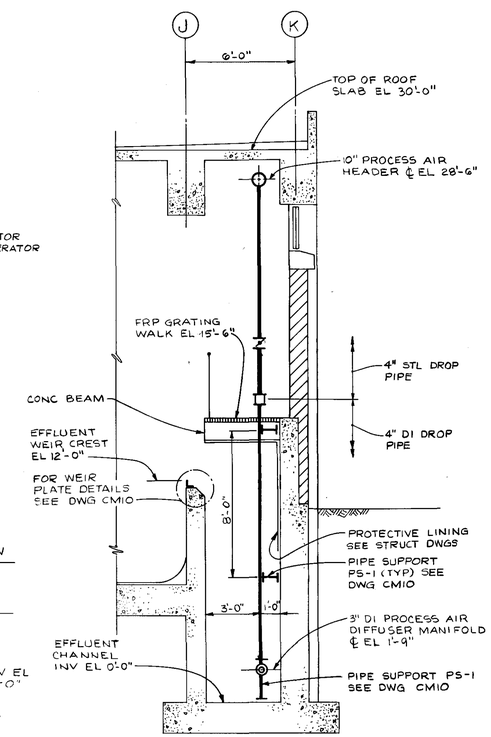

SECTION 8/CM1,2

SCALE: 1/4" = 1'-0"

RECORD DRAWING

THIS RECORD DRAWING IS NOT WARRANTED BUT IS BELIEVED TO REPRESENT CONDITIONS UPON COMPLETION OF CONSTRUCTION, WITHIN REASONABLE TOLERANCES, BASED UPON THE INFORMATION FURNISHED TO THE ENGINEER PERTAINING TO CHANGES MADE DURING CONSTRUCTION.

GREELEY AND HANSEN ENGINEERS, 4350 WEST CYPRESS STREET, TAMPA, FLORIDA 33607-4135	DESIGNED RMS DRAWN AOH, MSB CHECKED DCH, JRP	APPROVED ____ DATE ____ ____ DATE ____ GREELEY AND HANSEN, ENGINEERS	NO. / DATE / APP / REVISION	SCALE 4 0 4 8 FT 1/4" = 1'-0"	CITY OF TAMPA, FLORIDA HOOKERS POINT WASTEWATER TREATMENT PLANT PLANT EXPANSION PHASE I DIVISION 5H1 STRUCTURES AND EQUIPMENT

SCREEN AND GRIT BUILDING NO. 3
MECHANICAL
SECTIONS

PROJ NO
DWG CM4
SHEET 86 OF 203
DATE: JAN 1989 REV 0

87

NOTES

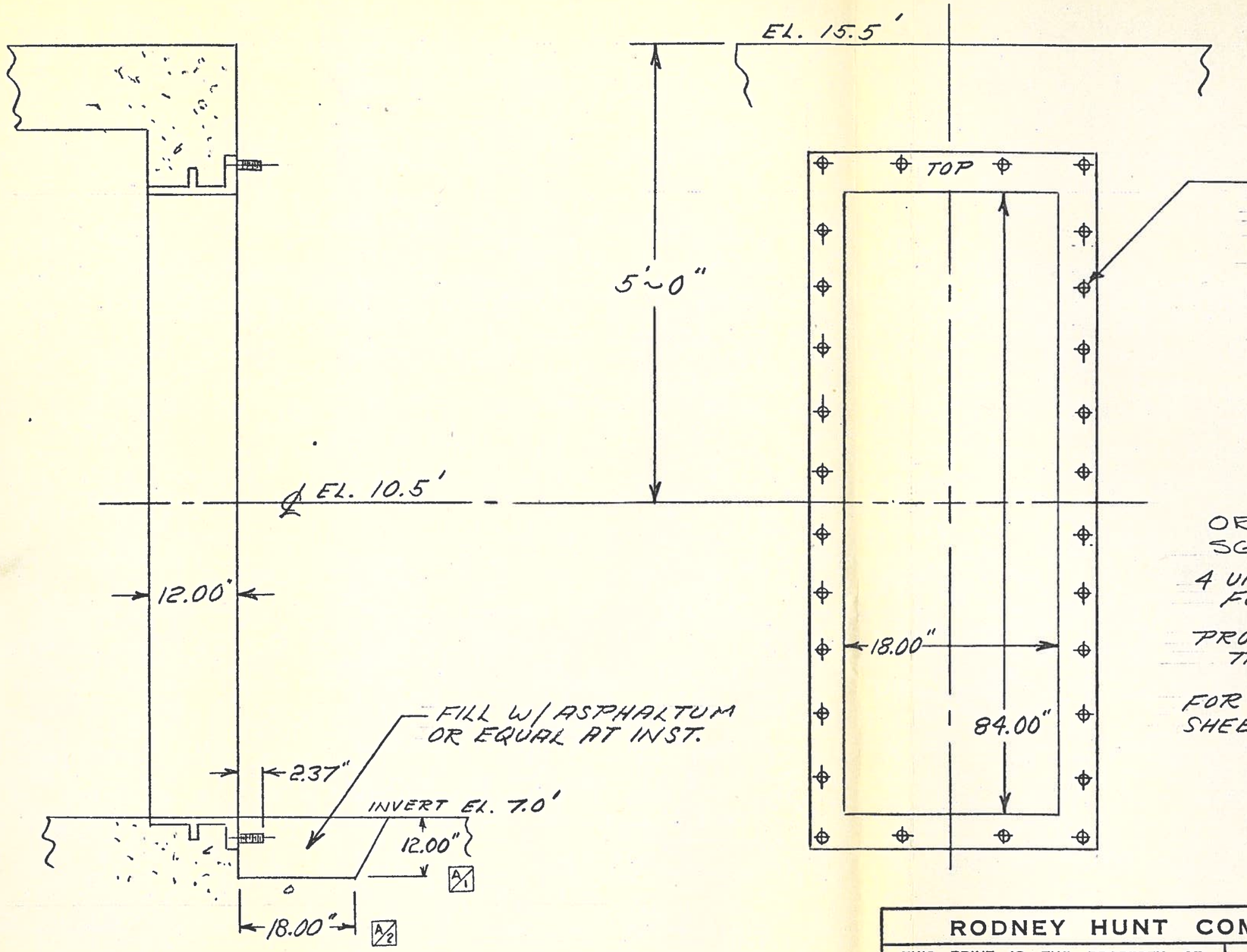

ORDER ITEM Nº 1
SG-SG-1 THRU SG-SG-4
4 UNITS REQ'D FOR INFLUENT CHANNEL
FOR SCREEN & GRIT BUILDING

PROJECT ~ HOOKERS POINT SEWAGE
TREATMENT PLANT ~ TAMPA, FLA.

FOR MATERIALS SEE SPECIFICATION
SHEET ~ 43869-2

ALT.	CHANGE	BY	CKD.	DATE	ALT.	CHANGE	BY	CKD.	DATE
	1-WAS 11.00" 2-WAS 16.00"	CAP		3-11-75					

RODNEY HUNT COMPANY, ORANGE, MASS., 01364

THIS PRINT IS THE PROPERTY OF RODNEY HUNT COMPANY THOSE WHO ACCEPT THIS PRINT AGREE THAT IT SHALL NOT BE GIVEN, LOANED, EXHIBITED OR COPIED AND THAT IT SHALL BE RETURNED UPON REQUEST TO RODNEY HUNT COMPANY NOVEL AND PATENTABLE FEATURES SHOWN ARE PROTECTED BY U.S. AND OR FOREIGN PAT, AND PAT. PEND.

INDEX SYMBOL

INSTALLATION ~ 18"x84" SLUICE GATE
SERIES HY-Q-225M FOR
DFS CONSTRUCTION CO.

DRAWN W.E.U.	DESIGNED	DATE 11-18-74
CHECKED	APPROVED	SCALE N.T.S.
ORDER NO. 43869-2	DWG. NO. E-15613	

K+E ALBANENE® RUST-PROOF R.L.M. P-221

ISSUED

SMB-

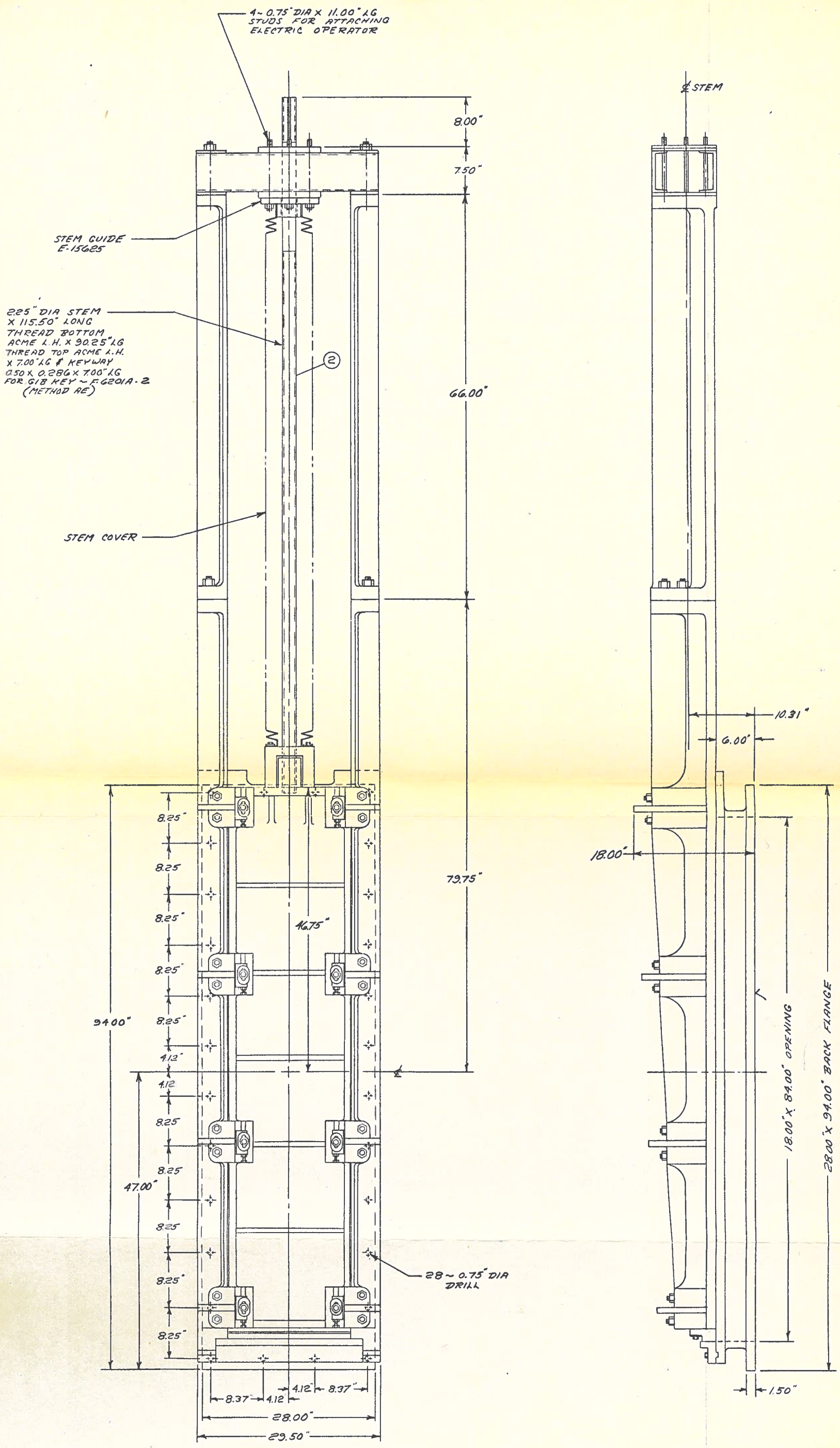

M.P. NO. B-018049

A	ADDED TEMP. NO.																						
		CHANGE	BY	CKD.	DATE	ALT.	CHANGE	BY	CKD.	DATE	ALT.	CHANGE	BY	CKD.	DATE	ALT.	CHANGE	BY	CKD.	DATE	ALT.	CHANGE	BY	CKD.	DATE

FRAME ~ D.24033 DISC ~ C.12454 GUIDES ~ D.8382 GUIDE EXT. ~ D.18114 SEAL ~ F.4139K RET. PL. ~ F.9288 STOP BAR ~ F.9289 YOKE ~ E.15629 TH. NUT ~ F.9285-8 STEM OVER ~ E.15668 ISSUED

RODNEY HUNT COMPANY, ORANGE, MASS., 01364

THIS PRINT IS THE PROPERTY OF RODNEY HUNT COMPANY THOSE WHO ACCEPT THIS PRINT AGREE THAT IT SHALL NOT BE GIVEN, LOANED, EXHIBITED OR COPIED AND THAT IT SHALL BE RETURNED UPON REQUEST TO RODNEY HUNT COMPANY NOVEL AND PATENTABLE FEATURES SHOWN ARE PROTECTED BY U.S. AND OR FOREIGN PAT. AND PAT. PEND.

ASSY ~ 18" X 84" SLUICE GATE
SERIES HY-G-223 ~ N.R.S.

INDEX SYMBOL		DRAWN	DESIGNED
CHECKED		APPROVED	DATE 11-27-73
ORDER NO.		DWG. NO. C-12455	SCALE 1/4"=1'-0"

TO BASE OF FLOORSTAND DIMENSION OF 15 FT. HANDWHEEL OPERATED, OFFSET FLOORSTA MODEL OS-2600, CLEAR PLASTIC INDICATING STEM COVER. WALL THIMBLE, 15" DEEP, "F" SECTION. BRONZE STUDS, NUTS AND ANCHOR BOLTS. ESTIMATED WEIGHT, HEAVIEST PIECE 300 LBS. ESTIMATED WEIGHT, ENTIRE INSTALLATION 975 LBS.

ITEM #5 - JUNCTION CHAMBER NO. 2 - GATE JC-2 - SG-1 PLAN SHEET M-27 & M-28

ONE (1) - 90" DIAMETER, SERIES HY-Q-160, FLANGE FRAME, FLUSH BOTTOM CLOSING, SLUICE GATE, CAST IRON CONSTRUCTION, FULLY BRONZE MOUNTED, SUITABLE FOR A SEATING OR UNSEATING HEAD OF 14.5 FT. GATE TO BE DESIGNED FOR MODULATING OPER ATION WITH BRONZE LINED GUIDES AND TONGUE COVERS. STAINLESS STEEL OPERATING STEM. ELECTRIC FLOORSTAND OPERATOR SIZED FOR THE PROPER OPERATION OF THE GATE AND SUITABLE FOR CONTINUOUS DUTY MODULATING SERVICE. ELECTRIC OPERATOR TO BE IN ACCORDANCE WITH THE SPECIFICATIONS. WALL THIMBLE, 18" DEEP "E" SECTION, WITH BACK FLANGE DRILLED AND TAPPED 125# STANDARD. BRONZE STUDS, NUTS AND ANCHOR BOLTS (STUDS AND NUTS FOR BACK FLANGE NOT INCLUDED). ESTIMATED WEIGHT, HEAVIEST PIECE 13,875 LBS. ESTIMA WEIGHT, EACH INSTALLATION, 27,185 LBS.

ITEM #6 - JUNCTION CHAMBER NO. 2 - GATE JC-2-SG-2 PLAN SHEETS M-27 & M-28

ONE (1) - 96" DIAMETER, WALL THIMBLE FOR FUTURE SLUICE GATE. WALL THIMBLE TO BE 18" DEEP, "E" SECTION. BOTH FLANGES DRILLED AND TAPPED 125# STANDARD. GALVANIZED STEEL COVER PLATE. ONE SET OF BRONZE STUDS AND NUTS, (STUDS AND NUTS FOR BACK FLANGE NOT INCLUDED.) ESTIMATED WEIGH 14,200 LBS.

ITEM #7 - JUNCTION CHAMBER NO. 2 - GATE JC-2 - SG-3 - PLAN SHEETS M-27 & M-28

ONE (1) - 72" DIAMETER, WALL THIMBLE FOR FUTURE SLUICE GATE. WALL THIMBLE TO BE 18" DEEP, "E" SECTION. BOTH FLANGES DRILLED AN TAPPED 125# STANDARD. GALVANIZED STEEL COVER PLATE. ONE SET OF BRONZE STUDS AND NUTS. (STUDS AND NUTS FOR BACK FLANGE NOT INCLUDED.) ESTIMATED WGHT. 7,10

ITEM # 8 - JUNCTION CHAMBER NO. 2 - GATE JC-2 - SG-4 PLAN SHEETS M-27 & M-28

ONE (1) - 66" DIAMETER, SERIES HY-Q-160, FLANGE FRAME, FLUSH BOTTOM CLOSING SLUICE GATE, CAST IRON CONSTRUCTION, FULLY BRONZE MOUNTED, SUITABLE FOR A 18.3 FT. SEATING OR UNSEATING HEAD. GATE DESIGNED FOR MODULATING SERVICE WITH BRONZE LINED GUIDES AND BRONZE TONGUE COVER. STAINLESS STEEL OPERATING STEM. ELECTRIC FLOORSTAND OPERATOR SIZED FOR THE PROPER OPERATION OF THE GATE AND SUITABLE FOR CONTINUOUS DUTY MODULATING SERVICE. ELECTRIC OPERATOR TO BE IN ACCORDANCE WITH THE SPECIFICATIONS. WALL THIMBLE, ~~24"~~ 15" DEEP, "E" SECTION. BACK FLANGE DRILLED AND TAPPED 125# STANDARD. BRONZE STUDS NUTS AND ANCHOR BOLTS. (STUDS AND NUTS FOR BACK FLANGE NOT INCLUDED.) ESTIMATED WEIGHT , HEAVIEST PIECE 8,230 LBS. HEAVIEST WEIGHT,ENTIRE INSTALLATION 13,7

ITEM #9 - MAIN PUMPING STATION - GATES MP-SG-1 THROUGH 7 - PLAN SHEETS M-30 AND M-36

SEVEN (7) - 48" DIAMETER, SERIES HY-Q-160, FLANGE FRAME, FLUSH BOTTOM CLOSING SLUICE GATES, CAST IRON CONSTRUCTION, FULLY BRONZE MOUNTED, SUITABLE FOR A SEATING OR UNSEATING HEAD OF 17.58 FT. STAINLESS STEEL OPERATING STEM ARRANGED FOR A CENTERLINE OF GATE TO BASE OF FLOORSTAND DIMENSION OF 16.52 FT. ELECTRIC FLOORSTAND OPERATOR SIZ FOR THE PROPER OPERATION OF THE GATE AND IN ACCORDAN WITH THE SPECIFICATIONS. WALL THIMBLE, 24" DEEP, "E" SECTION, WITH BACK FLANGE DRILLED AND TAPPED 125 STANDARD. BRONZE STUDS, NUTS AND ANCHOR BOLTS, (STUD AND NUTS FOR BACK FLANGE NOT INCLUDED.) ESTIMATED WEIGHT, HEAVIEST PIECE, 2,900 LBS. ESTIMATED WEIGHT, EACH INSTALLATION, 7,045 LBS.

ITEM #9A - MAIN PUMPING STATION - GATES MP-SG-3 & 4 PLAN SHEETS M-30 & M-36

TWO (2) - FABRICATED STEEL COVER PLATES, COMPLETE WITH BRONZE STUDS AND NUTS. ESTIMATED WEIGHT, 735 LBS. EACH.

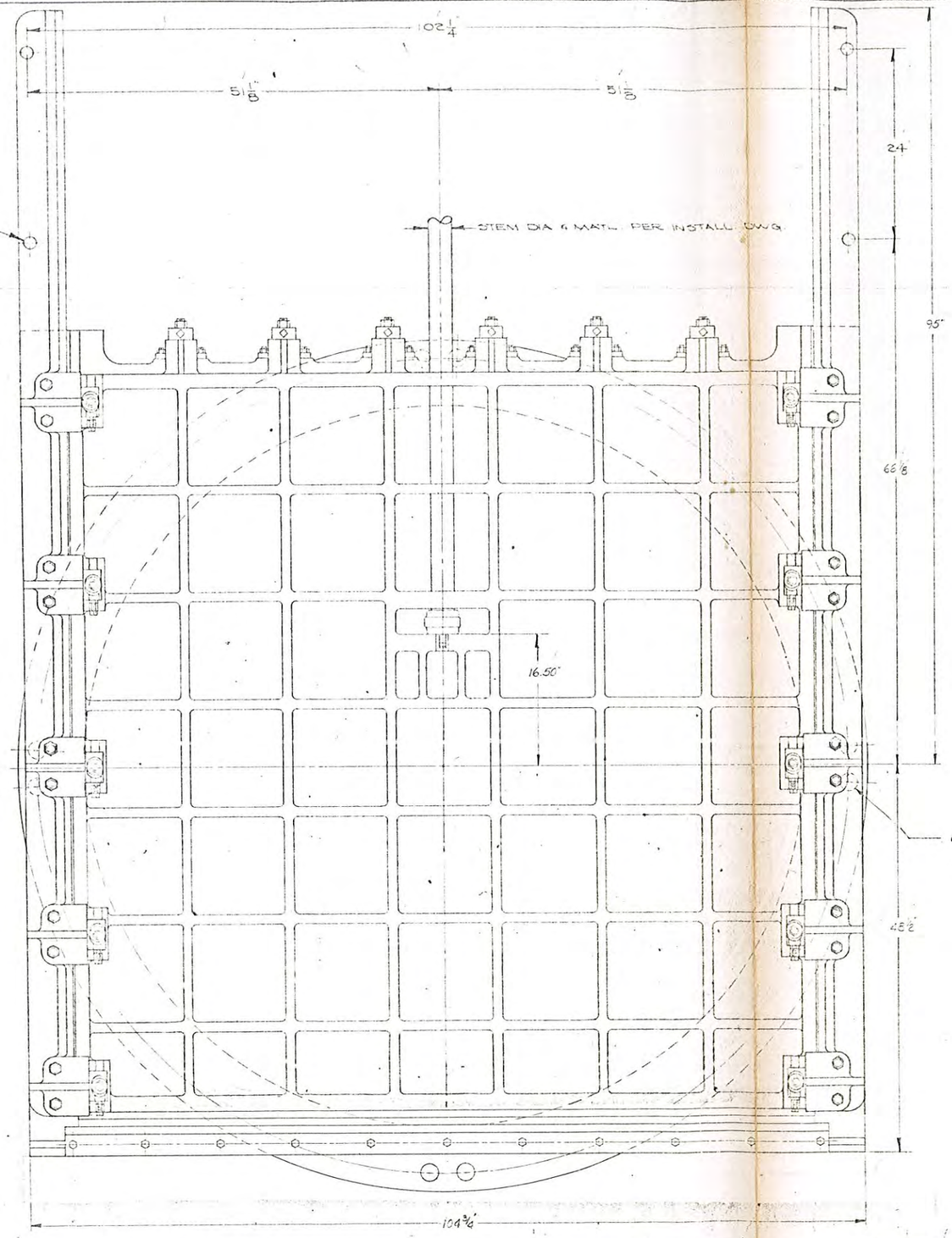

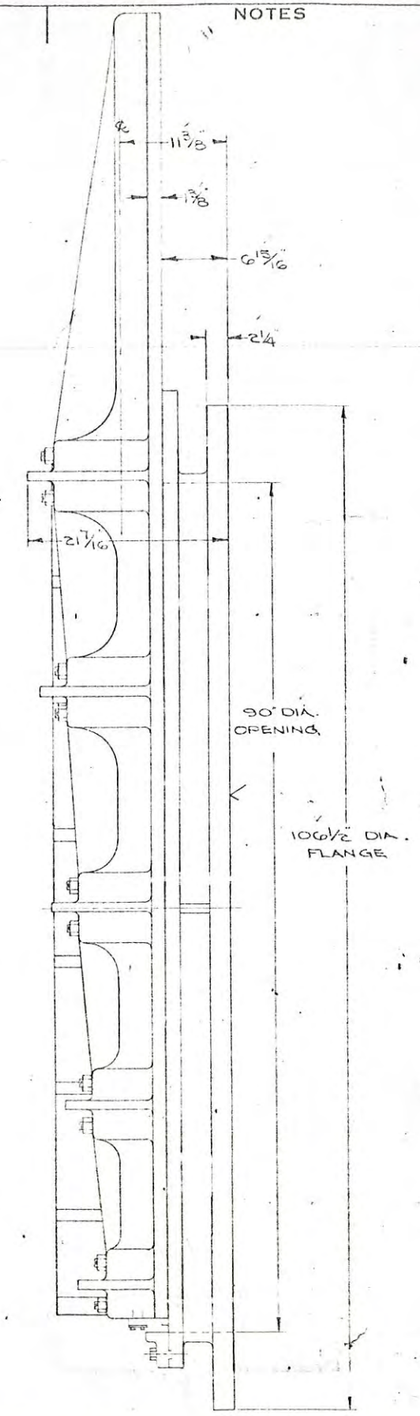

TEMPLATE No. B-090006

ALT.	CHANGE	BY	CKD.	DATE	ALT.	CHANGE	BY	CKD.	DATE	ALT.	CHANGE	BY	CKD.	DATE	ALT.	CHANGE	BY	CKD.	DATE	ALT.	CHANGE	BY	CKD.	DATE
A	ADDED TEMP. NO.																							

RODNEY HUNT MACHINE CO., ORANGE, MASS., U. S. A.

THIS PRINT IS THE PROPERTY OF RODNEY HUNT MACHINE CO. THOSE WHO ACCEPT THIS PRINT AGREE THAT IT SHALL NOT BE GIVEN, LOANED, EXHIBITED OR COPIED AND THAT IT SHALL BE RETURNED UPON REQUEST TO RODNEY HUNT MACHINE CO. NOVEL AND PATENTABLE FEATURES SHOWN ARE PROTECTED BY U.S. AND/OR FOREIGN PAT. AND PAT. PEND.

ASSEMBLY: 90" DIA. SLUICE GATE - SERIES H-S-163 W/ BRONZE LINERS

DRAWN		DESIGNED	DATE
CHECKED		APPROVED	SCALE 1/2" = 1'-0"
INDEX SYMBOL 18H	ORDER NO.		DWG. NO. C-12481

FRAME: D-24032 DISC: D-24023 GUIDES: E-4188-2 TH. NUT: F-4818, OR. F-4817 STO. BAR: E-5803-2 RET. R: F-5327 SEAL: F-4199-K

ISSUED

C-9203

C-6010

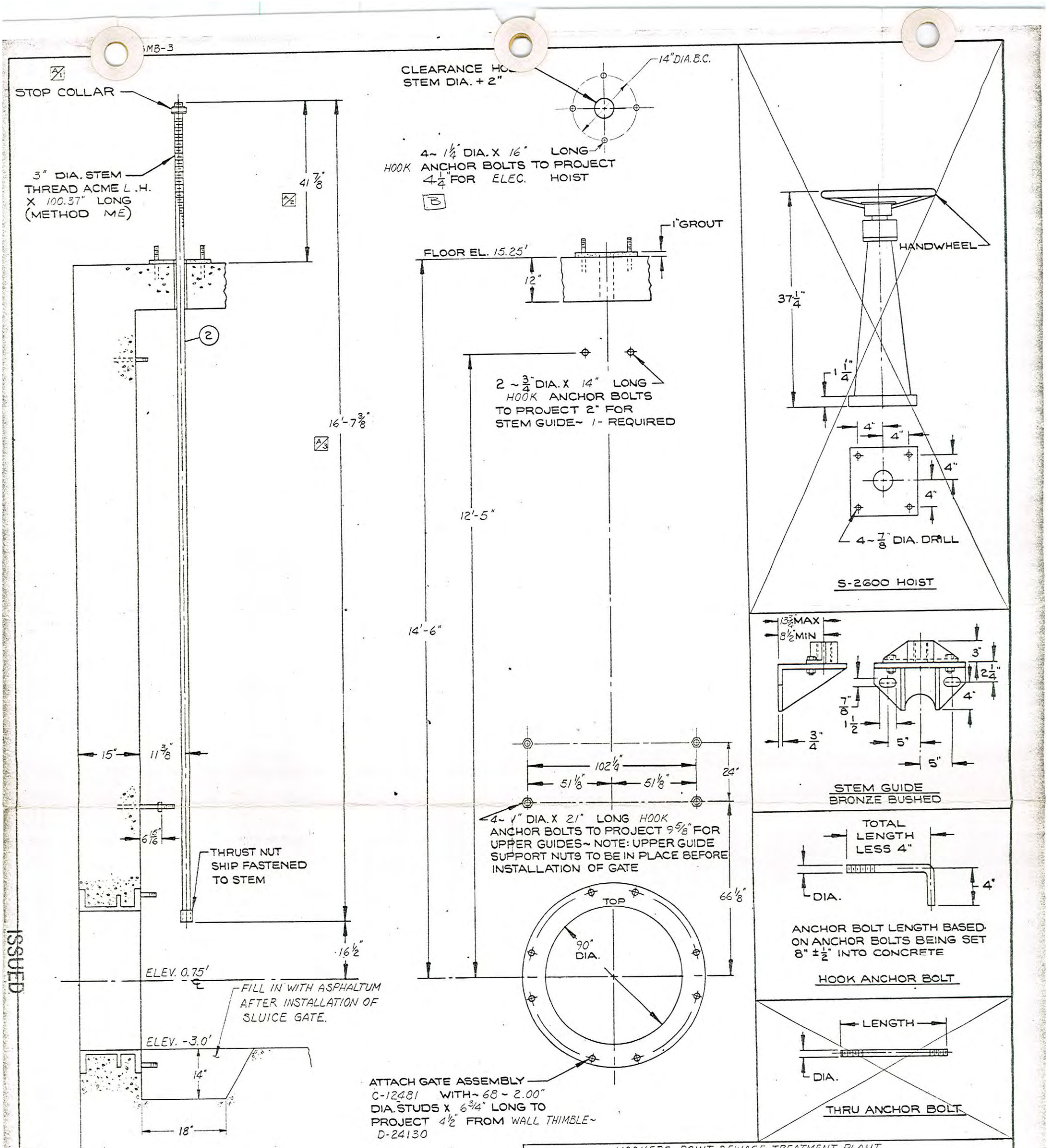

PROJECT: HOOKERS POINT SEWAGE TREATMENT PLANT

GATE LOCATION: JUNCTION CHAMBER #2

GATE NUMBER: JC-2-SG-1 QUANTITY: 1 ORDER ITEM NUMBER: 5

FOR MATERIALS SEE SPECIFICATION SHEET: 43869-2

RODNEY HUNT COMPANY, ORANGE, MASS., 01364

ALT.	CHANGE	BY	CKD.	DATE
A	1-ADD'D STOP COLLAR 2-WAS 40 3/8 3-WAS 16'-5 7/8"	CAP		4-15-75
B	4 1/4 PROJ. WAS 4"	MAR		10-6-75

THIS PRINT IS THE PROPERTY OF RODNEY HUNT COMPANY THOSE WHO ACCEPT THIS PRINT AGREE THAT IT SHALL NOT BE GIVEN, LOANED, EXHIBITED OR COPIED AND THAT IT SHALL BE RETURNED UPON REQUEST TO RODNEY HUNT COMPANY NOVEL AND PATENTABLE FEATURES SHOWN ARE PROTECTED BY U.S. AND OR FOREIGN PAT. AND PAT. PEND.

INSTALLATION: 90" DIA. SLUICE GATE

SERIES HY-Q-160 FOR D.F.S. CONSTRUCTION CO.

DRAWN DAL	DESIGNED	DATE 12-2-74
CHECKED W	APPROVED	SCALE N.T.S.
INDEX SYMBOL	ORDER NO. 43869-2	DWG. NO. D-24047

HOIST: ELEC. STOP STEM FLR. MTD. THRUST NUT: F-4815-23 COUPLING:

DWG. NO: D-24047

ISSUED

REF. FILE NO. 114

TEMPLATE NO. B096011

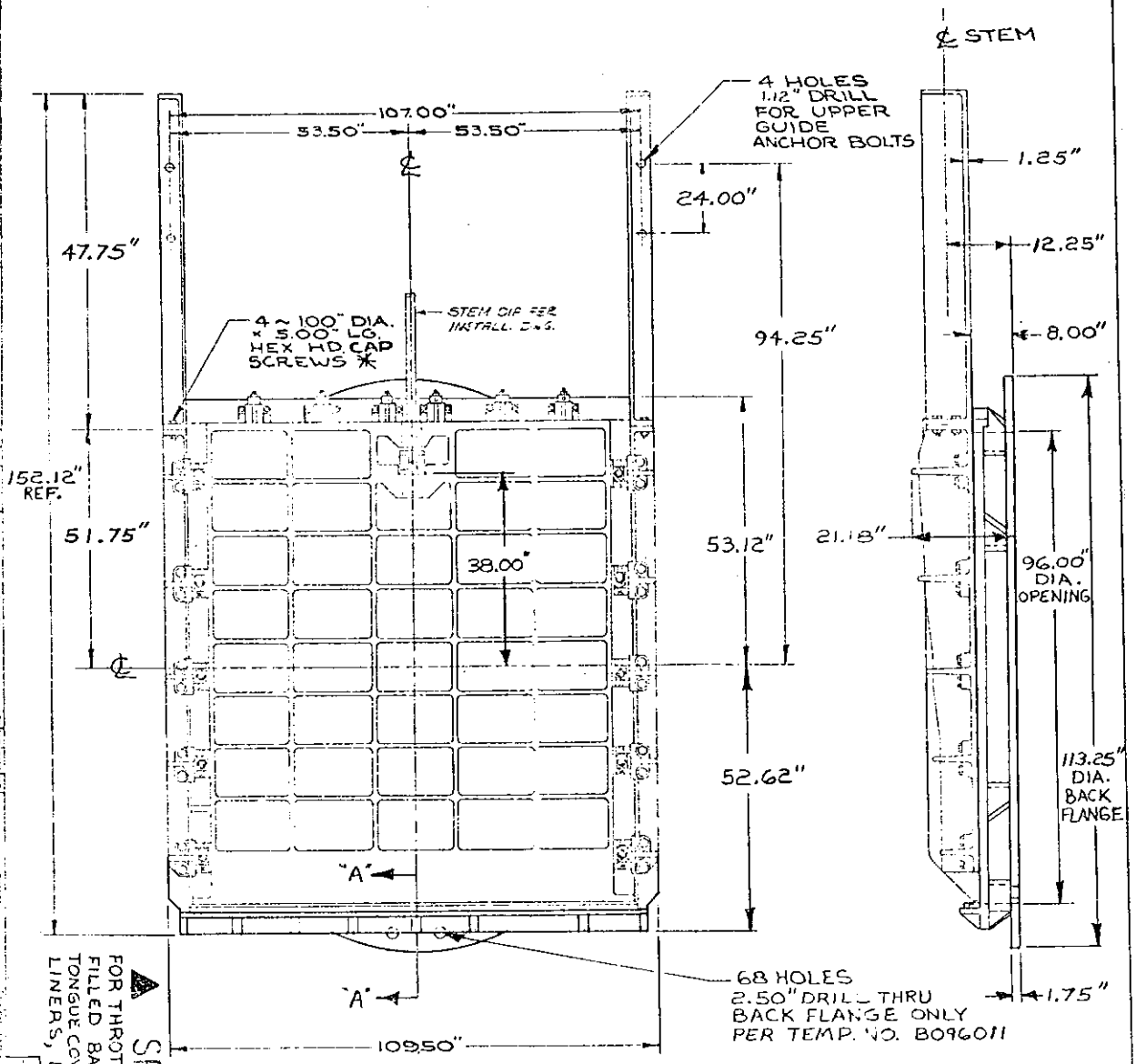

✱ ALIGN W/TAPER PINS

▲ SPECIAL FOR THROTTLING USE~ FILLED BACK, BRZ. TONGUE COVERS & GUIDE LINERS, BULLNOSE

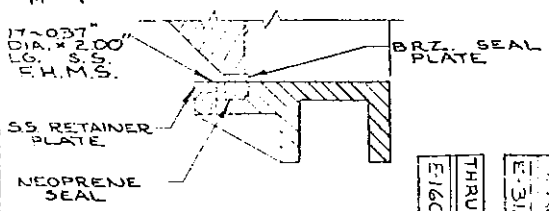

SECTION "A-A"

DISC	C-18121
FRAME	E-31252
GUIDE	C-12634-45
[illegible]	E-15535B-13
SIDE WEDGE	E-38313A
TOP WEDGE	E-18193
RET. PL.	E-31254
SEAL	E-31253
[illegible]	E-31255
THRUST NUT	E-16021

13300

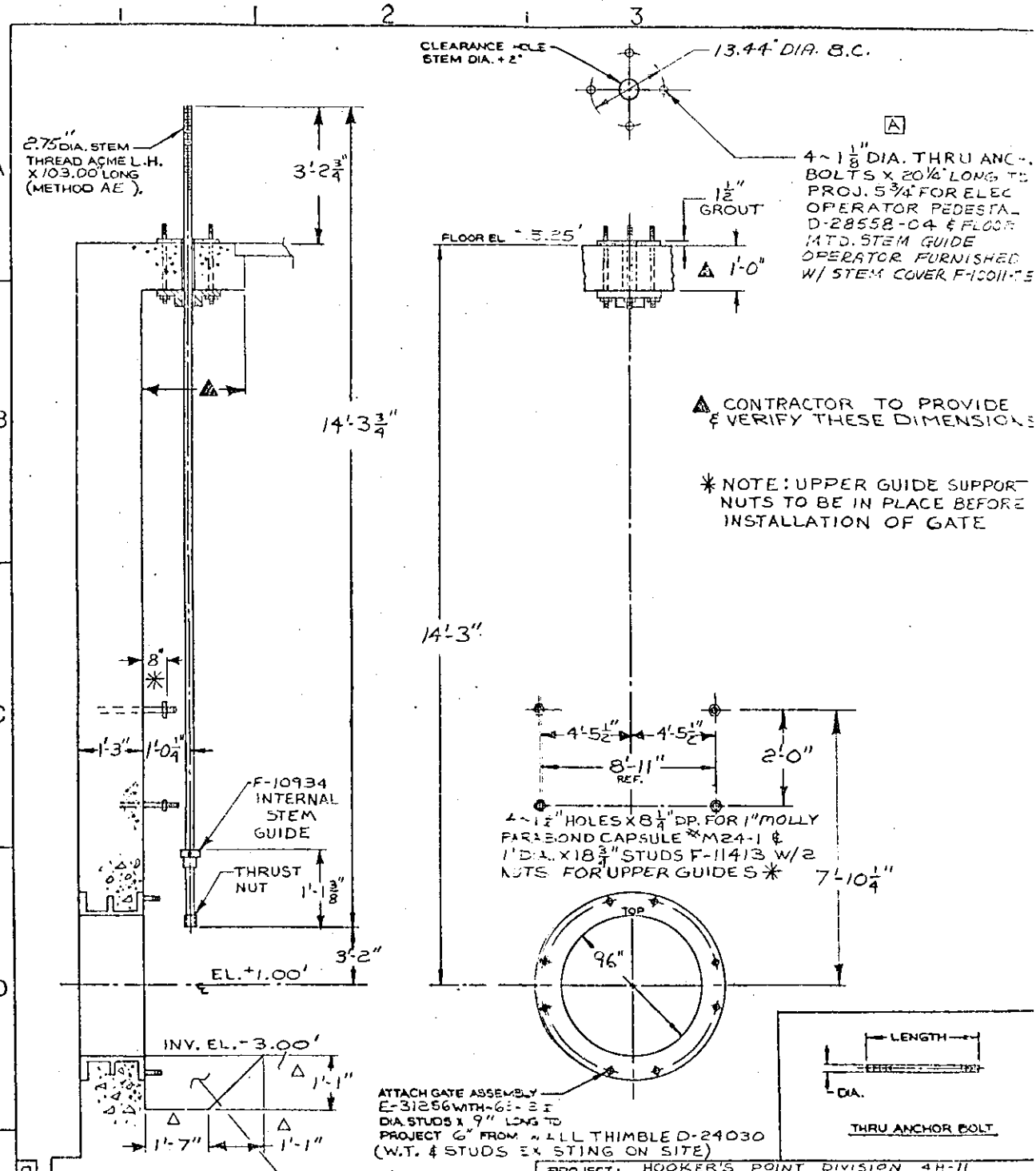

ALT.	CHANGE	BY	CKD.	DATE
A	HOIST PEDESTAL WAS FAB STEEL - FLOOR MTD GUIDE WAS E-4333B-04			

PROJECT: HOOKER'S POINT DIVISION 4H-11 TAMPA, FL

GATE LOCATION: JUNCTION CHAMBER NO. 2

GATE NO. C-02-1-1 QUANTITY: 1 ORDER ITEM NUMBER: 6

FOR MATERIALS SEE SPECIFICATION SHEET: 45653-2

RODNEY HUNT COMPANY, ORANGE, MASS., 01364

THIS PRINT IS THE PROPERTY OF RODNEY HUNT COMPANY THOSE WHO ACCEPT THIS PRINT AGREE THAT IT SHALL NOT BE GIVEN, LOANED, EXHIBITED OR COPIED AND THAT IT SHALL BE RETURNED UPON REQUEST TO RODNEY HUNT COMPANY NOVEL AND PATENTABLE FEATURES SHOWN ARE PROTECTED BY U.S. AND OR FOREIGN PAT. AND PAT. PEND.

INSTALLATION: 15" DIA SLUICE GATE

SERIES HY-Q-160 FOR VOGEL BROS. BLDG. CO.

DRAWN JCT DESIGNED JER DATE 8-16-

CHECKED CE APPROVED SCALE N.T.S.

INDEX SYMBOL 18M ORDER NO. 45653-2 DWG. NO. E-31262

HOIST: EIM 3603-0 STOP COLLAR: x STEM GUIDE: x H.R. NTD. E-25998 STEM GUIDE: THRUST NUT: E-16026-10 ATTACH PER: COUPLING: x ATTACH PER: x

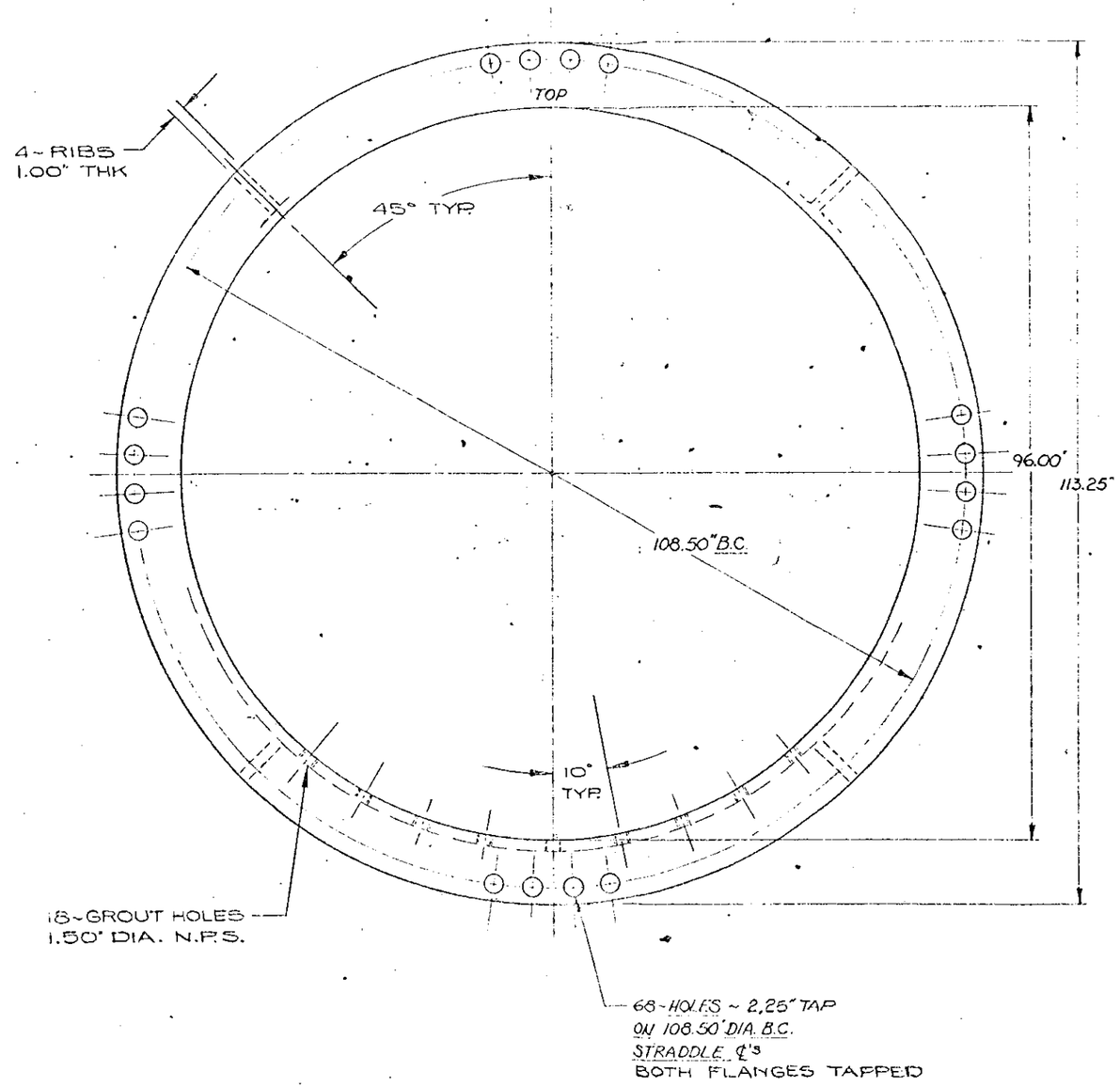

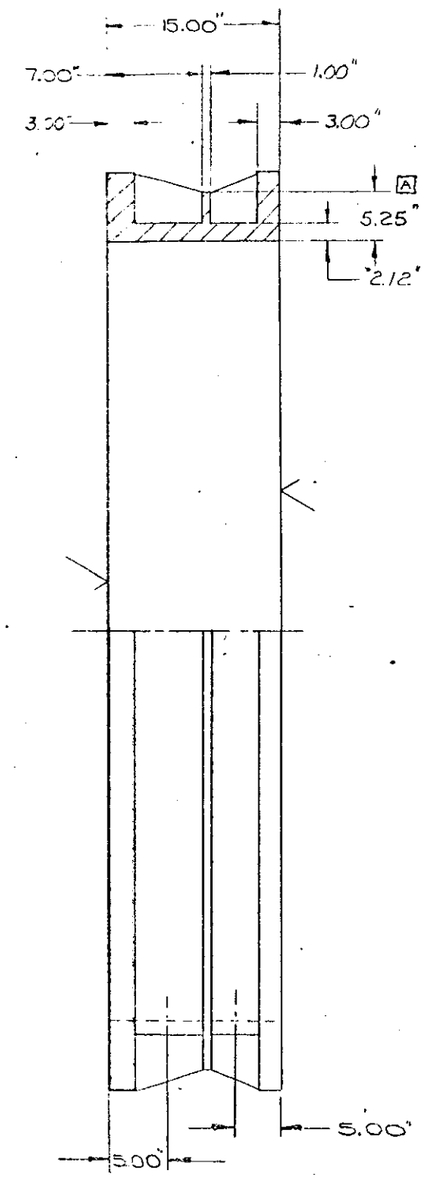

PATT. NO. 2-9634-01

TEMPLATE NO B-096011

ALT.	CHANGE	BY	CKD.	DATE	ALT.	CHANGE	BY	CKD.	DATE	ALT.	CHANGE	BY	CKD.	DATE
A	5.25" DIM. WAS 6.63"													
B	B-096011 WAS B-096001													

RODNEY HUNT COMPANY, ORANGE, MASS., 01364

THIS PRINT IS THE PROPERTY OF RODNEY HUNT COMPANY THOSE WHO ACCEPT THIS PRINT AGREE THAT IT SHALL NOT BE GIVEN, LOANED, EXHIBITED OR COPIED AND THAT IT SHALL BE RETURNED UPON REQUEST TO RODNEY HUNT COMPANY NOVEL AND PATENTABLE FEATURES SHOWN ARE PROTECTED BY U.S. AND OR FOREIGN PAT. AND PAT. PEND.

DETAIL: 96" DIA WALL THIMBLE

E SECTION ~15" DEEP

DRAWN CAP	DESIGNED	DATE 11-25-74
CHECKED	APPROVED	SCALE
INDEX SYMBOL	ORDER NO.	DWG. NO. D-24030

D-21152

K+E ALBANENE SURFACE B.L.M. 4032 item 6

ISSUED FOUNDRY

NOTES

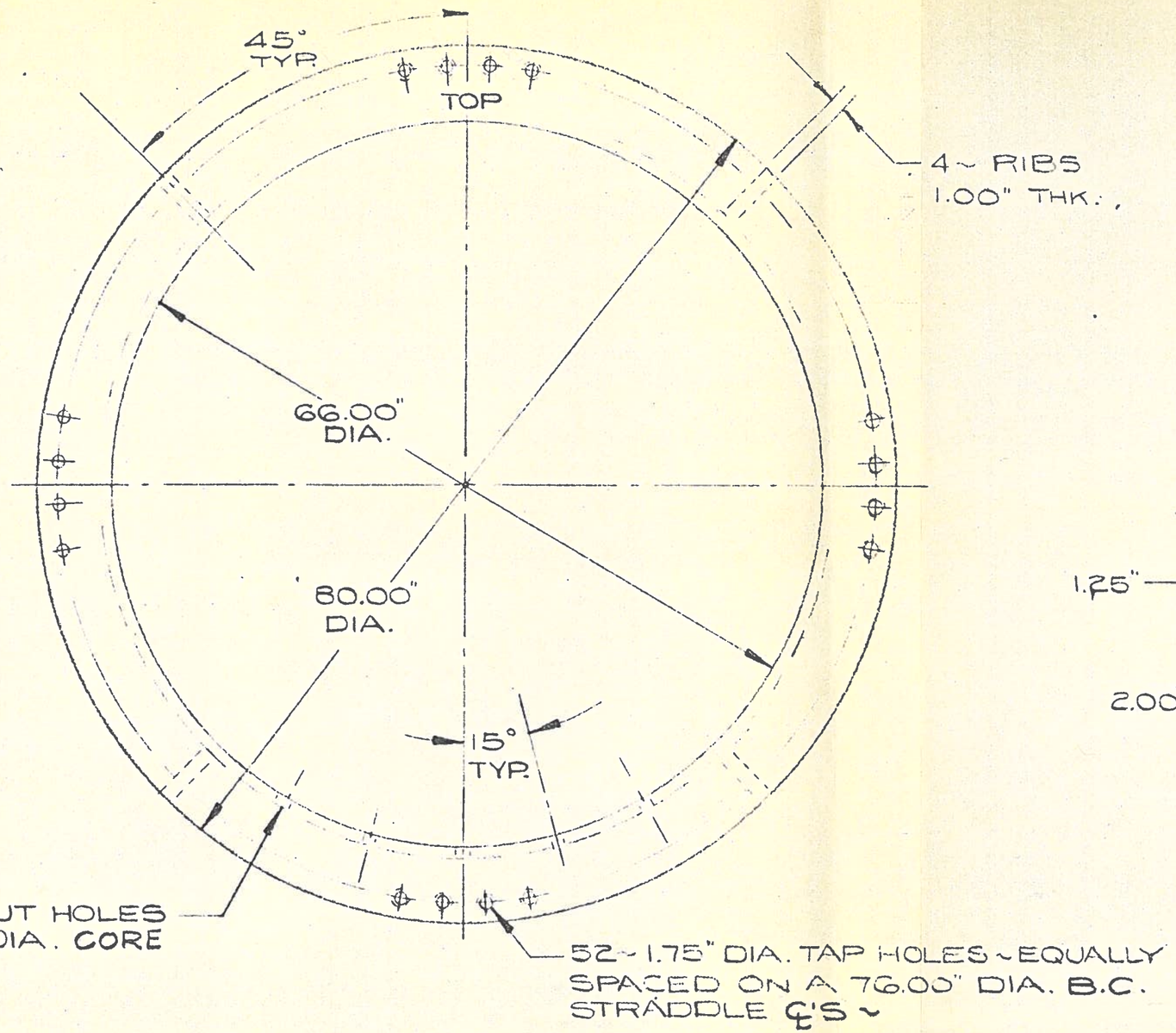

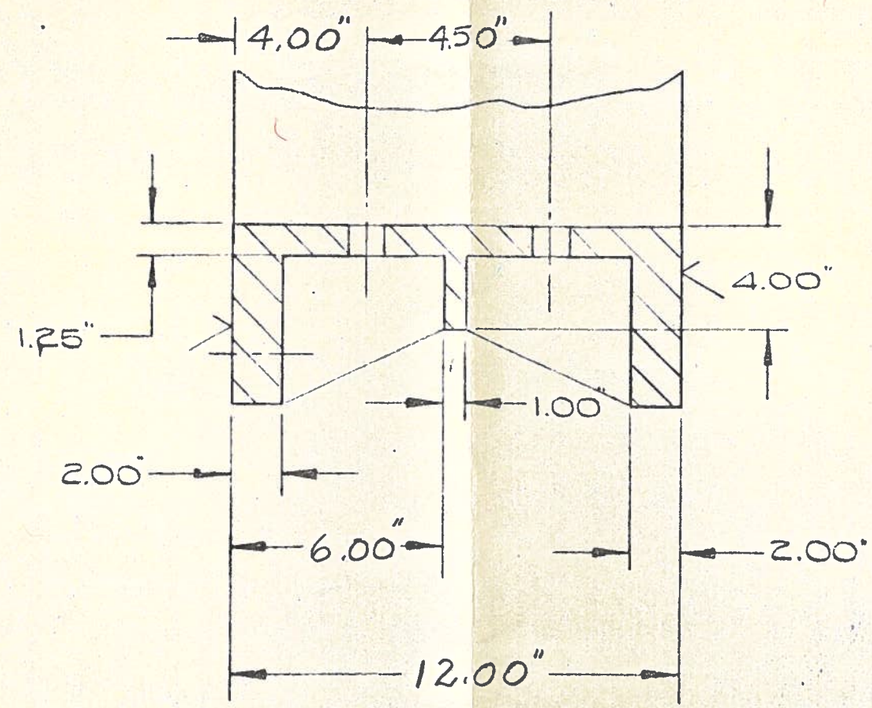

PATT. NO: 2-A401-00

TEMP. NO: B066001

ALT.	CHANGE	BY	CKD.	DATE	ALT.	CHANGE	BY	CKD.	DATE

RODNEY HUNT COMPANY, ORANGE, MASS., 01364

THIS PRINT IS THE PROPERTY OF RODNEY HUNT COMPANY THOSE WHO ACCEPT THIS PRINT AGREE THAT IT SHALL NOT BE GIVEN, LOANED, EXHIBITED OR COPIED AND THAT IT SHALL BE RETURNED UPON REQUEST TO RODNEY HUNT COMPANY NOVEL AND PATENTABLE FEATURES SHOWN ARE PROTECTED BY U.S. AND OR FOREIGN PAT. AND PAT. PEND.

DETAIL: 66" DIA. WALL THIMBLE ~ E-12" DP.

DRAWN R.A. Powers	DESIGNED	DATE 2-10-75
CHECKED W	APPROVED	SCALE N.T.S.
INDEX SYMBOL 1BM PE	ORDER NO.	DWG. NO. E-15738

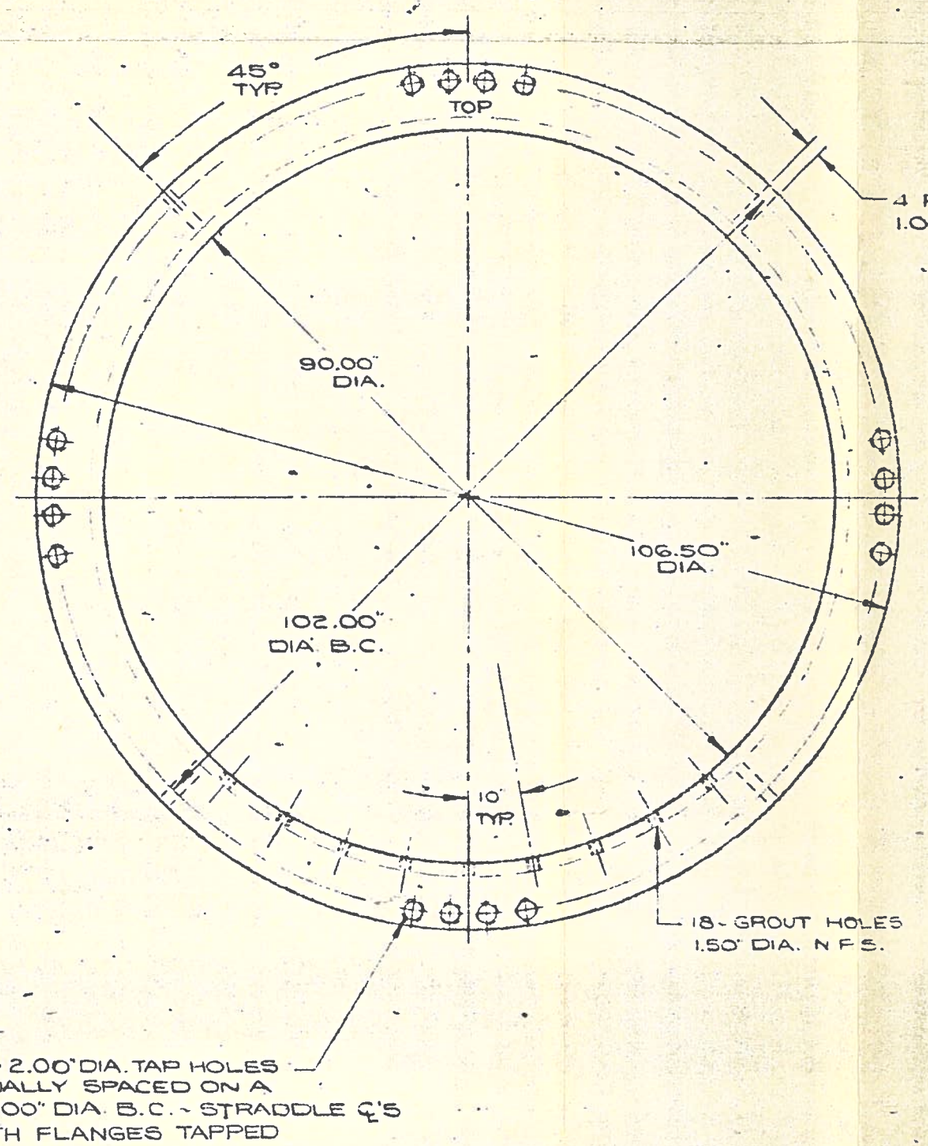

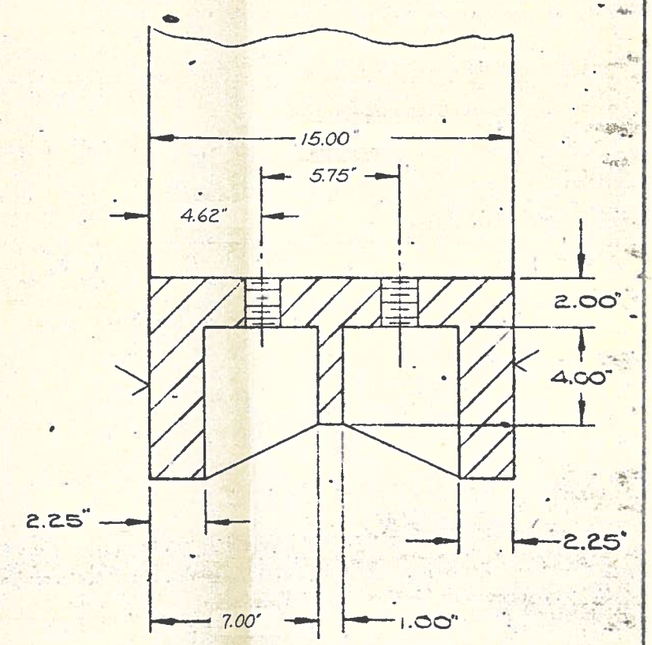

PATTERN NO: 2-A266-00

TEMP. NO. B-090006

ALT.	CHANGE	BY	CKD.	DATE	ALT.	CHANGE	BY	CKD.	DATE	ALT.	CHANGE	BY	CKD.	DATE
A	ADDED TEMP. NO.	JC	EJV	3-29-78										

RODNEY HUNT COMPANY, ORANGE, MASS., 01364

THIS PRINT IS THE PROPERTY OF RODNEY HUNT COMPANY THOSE WHO ACCEPT THIS PRINT AGREE THAT IT SHALL NOT BE GIVEN, LOANED, EXHIBITED OR COPIED AND THAT IT SHALL BE RETURNED UPON REQUEST TO RODNEY HUNT COMPANY NOVEL AND PATENTABLE FEATURES SHOWN ARE PROTECTED BY U.S. AND OR FOREIGN PAT. AND PAT. PEND.

DETAIL: 90" DIA. WALL THIMBLE
E-SECT ~ 15" DP.

DRAWN DRL	DESIGNED	DATE 12-20-74	
CHECKED	APPROVED	SCALE 1/8" = 1'	
INDEX SYMBOL IBM PE	ORDER NO.	DWG. NO. D-24130	

D-24034

K+E 10 X 10 TO THE 1/2 INCH 359-23 1/2 X 28

ISSUED

FOUNDRY

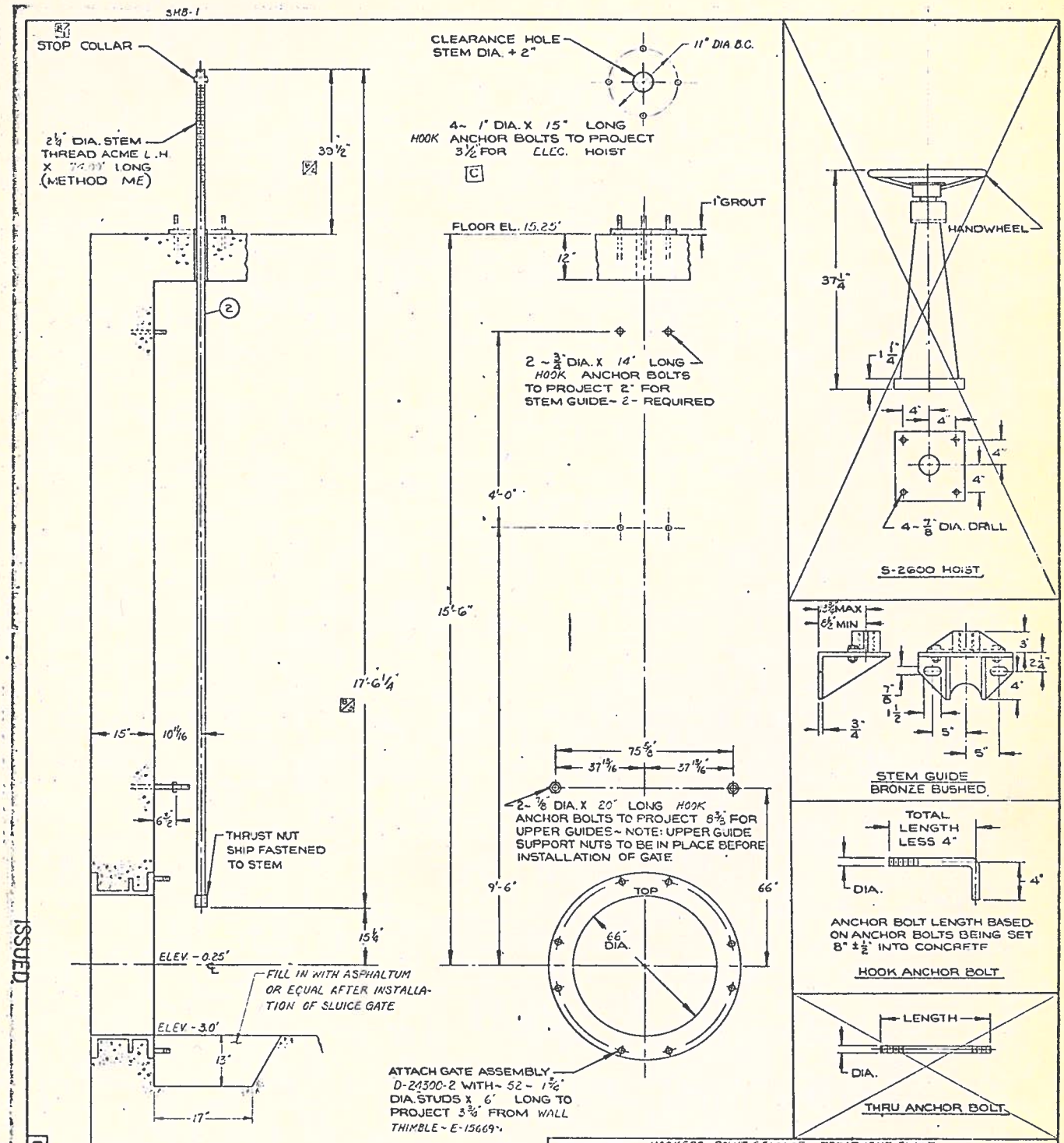

ISSUED

DWG. NO: D-24055

PROJECT: HOOKERS POINT SEWAGE TREATMENT PLANT

GATE LOCATION: JUNCTION CHAMBER #2

GATE NUMBER: WD-2544 QUANTITY: 1 ORDER ITEM NUMBER: 8

FOR MATERIALS SEE SPECIFICATION SHEET: 43869-2

RODNEY HUNT COMPANY, ORANGE, MASS., 01364

ALT.	CHANGE	BY	CKD.	DATE
A	GATE ASSEMBLY WAS D-12571-2	DFL		2-1-77
B	ADD'D STOP COLLAR 2-39½ WAS 38" 3-17'-6¼ WAS 17'-4¾	CAP		11-6-75
C	3½ PROJ. WAS 3⅜	HAR		11-6-75

THIS PRINT IS THE PROPERTY OF RODNEY HUNT COMPANY THOSE WHO ACCEPT THIS PRINT AGREE THAT IT SHALL NOT BE GIVEN, LOANED, EXHIBITED OR COPIED AND THAT IT SHALL BE RETURNED UPON REQUEST TO RODNEY HUNT COMPANY NOVEL AND PATENTABLE FEATURES SHOWN ARE PROTECTED BY U.S. AND OR FOREIGN PAT. AND PAT. PEND.

INDEX SYMBOL

INSTALLATION: 66" DIA. SLUICE GATE

SERIES HY-0-160 FOR

D.F.S. CONSTRUCTION CO.

DRAWN DFL	DESIGNED	DATE 12-3-74
CHECKED	APPROVLD	SCALE N.T.S.
ORDER NO. 43869-2		DWG. NO. D-24055

HOIST: ELEC. STOP STEM FLR MTD THRUST NUT 1 1/16-20 COUPLING:

FILE NO. 114

NOTES

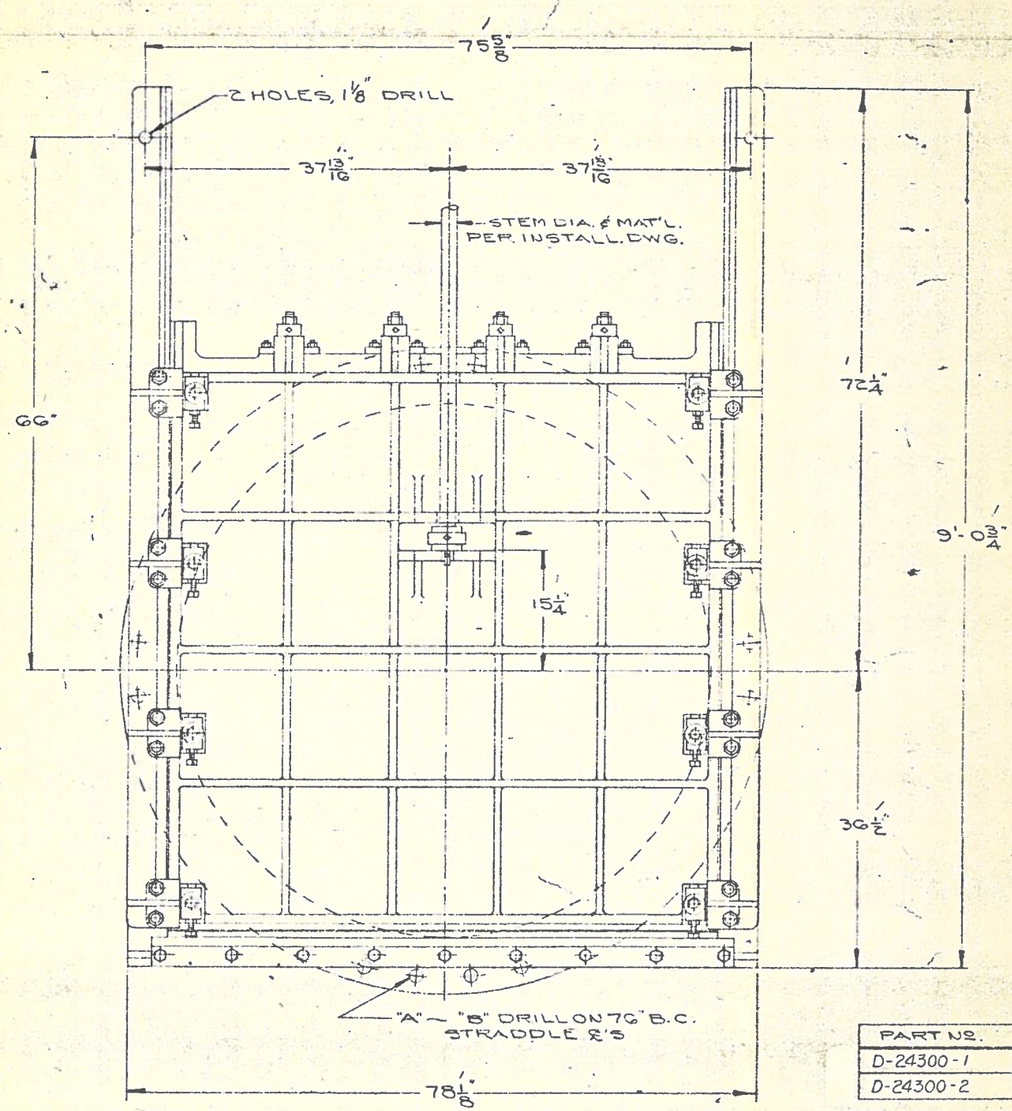

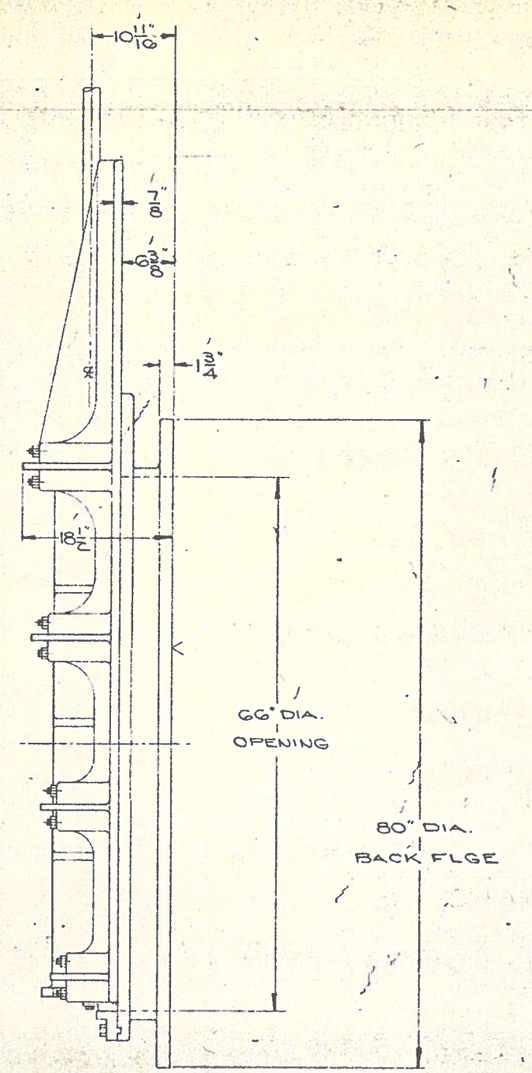

PART No.	"A"	"B"	
D-24300-1	52	1 3/8"	25# STD.
D-24300-2	52	2"	125# STD.

TEMPLATE No. B-06001

ALT.	CHANGE	BY	CKD.	DATE	ALT.	CHANGE	BY	CKD.	DATE	ALT.	CHANGE	BY	CKD.	DATE

RODNEY HUNT MACHINE CO., ORANGE, MASS., U. S. A.

THIS PRINT IS THE PROPERTY OF RODNEY HUNT MACHINE CO. THOSE WHO ACCEPT THIS PRINT AGREE THAT IT SHALL NOT BE GIVEN, LOANED, EXHIBITED OR COPIED AND THAT IT SHALL BE RETURNED UPON REQUEST TO RODNEY HUNT MACHINE CO. NOVEL AND PATENTABLE FEATURES SHOWN ARE PROTECTED BY U. S AND/OR FOREIGN PAT. AND PAT. PEND.

ASSEMBLY: 66" DIA. SLUICE GATE,
SERIES HY-Q-160
W/ BRZ. LINERS

DRAWN DRL	DESIGNED	DATE 2-12-74
CHECKED W	APPROVED	SCALE 1" = 1'-0"
INDEX SYMBOL	ORDER NO.	DWG. NO. D-24300

FORM 8040-B. L. M. INC. FRAME D-10159 DISC~D-9324-2 GUIDES~E-4194-2 TH. NUT F-4815 STOP BAR E-5880-3 RET. RE. E-4198 SEAL F-4198-K ISSUED

D-12571

K+E ALBANENE

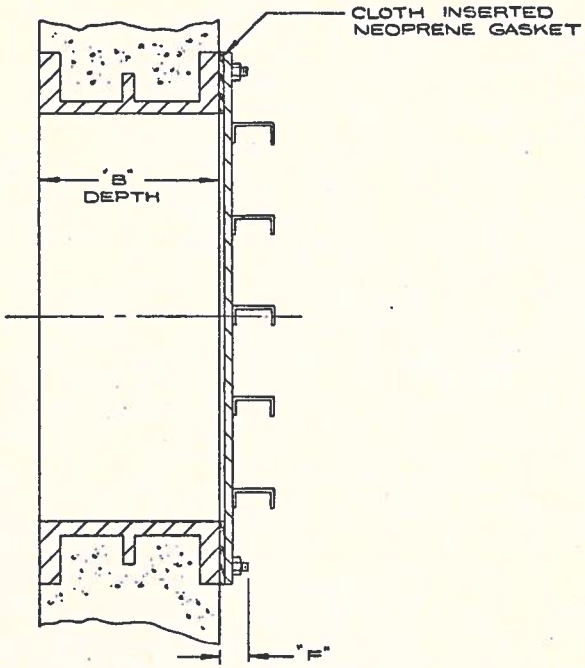

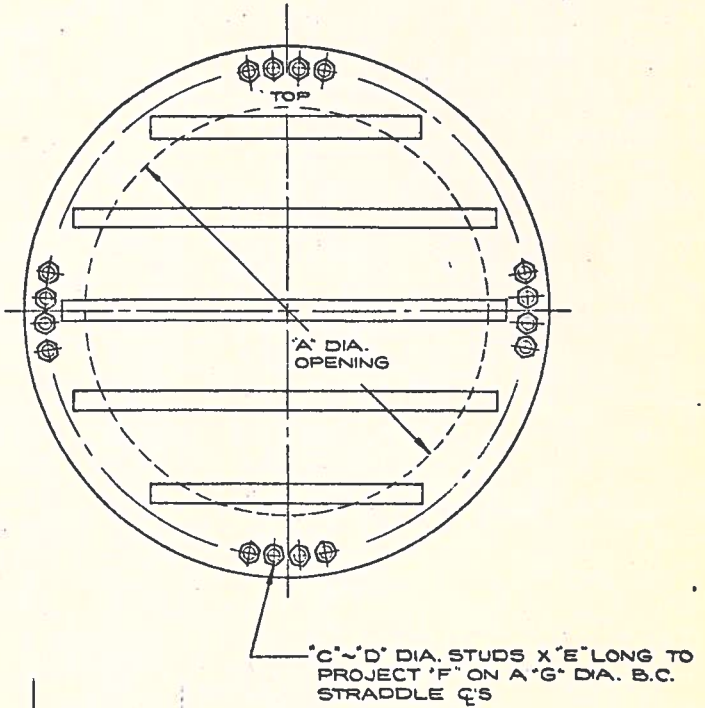

ITEM NO.	QTY.	"A" DIA.	"B" DIA.	TYPE	WALL THIMBLE	COVER ℞	"C"	"D"	"E"	"F"	"G" DIA.
32A	1	72.00	12.00	E	E-15739	D-24058	60	1.75	6.50	4.50	82.50
34A	1	66.00	12.00	E	E-15738	D-24278	52	1.75	6.50	4.50	80.00
6	1	96.00	15.00	E	D-24030	D-24056	68	2.25	9.00	6.00	108.50
7	1	72.00	15.00	E	E-15628	D-24058	60	1.75	6.50	4.50	82.50
9A	2	48.00	24.00	E	E-15623	E-15639	44	1.50	5.25	3.75	56.00
27	1	90.00	15.00	E	D-24034	D-24057	68	2.00	7.50	5.25	102.00
28	1	90.00	18.00	E	D-24035						
29	1	90.00	18.00	F	D-24037						
30	1	96.00	18.00	E	D-24041	D-24056	68	2.25	9.00	6.00	108.50
31	2	96.00	18.00	F	D-24042	D-24056	68	2.25	9.00	6.00	108.50
32	1	72.00	18.00	E	E-15633	D-24058	60	1.75	6.50	4.50	82.50
33	2	72.00	18.00	F	E-15634	D-24058	60	1.75	6.50	4.50	82.50
34	1	66.00	18.00	E	E-15636						
35	1	66.00	18.00	F	E-15637						

A

ALT.	CHANGE	BY	CKD.	DATE	ALT.	CHANGE	BY	CKD.	DATE	ALT.	CHANGE	BY	CKD.	DATE
A	Added Item 34A & Item 32A	[illegible]	[illegible]	6-1-75										

ITEM	LOCATION
32A	WET WELL ~ MAIN PUMPING STATION
34A	WET WELL - MAIN PUMPING STATION
6	JUNCTION CHAMBER #2, FOR FUTURE GATE JC-SG-2
7	JUNCTION CHAMBER #2, FOR FUTURE GATE JC-SG-3
9A	MAIN PUMPING STATION, BACK OF SLUICE GATES MP-SG-3,4
27	N.W. CORNER OF JUNCTION CHAMBER #2, FUTURE GRIT TANKS EFFLUENT
28	ENTRANCE TO METER MRC-1, METER VAULT #2
29	EXIT FROM METER MRC-1, METER VAULT #2
30	ENTRANCE TO FUTURE METER MRC-2, METER VAULT #2
31	EXIT FROM FUTURE METER MRC-2, METER VAULT #2
32	ENTRANCE TO FUTURE METER MRC-3, METER VAULT #2
33	EXIT FROM FUTURE METER MRC-3, METER VAULT #2
34	ENTRANCE TO FUTURE METER MRC-4, METER VAULT #2
35	EXIT FROM FUTURE METER MRC-4, METER VAULT #2

RODNEY HUNT COMPANY, ORANGE, MASS., 01364

THIS PRINT IS THE PROPERTY OF RODNEY HUNT COMPANY THOSE WHO ACCEPT THIS PRINT AGREE THAT IT SHALL NOT BE GIVEN, LOANED, EXHIBITED OR COPIED AND THAT IT SHALL BE RETURNED UPON REQUEST TO RODNEY HUNT COMPANY NOVEL AND PATENTABLE FEATURES SHOWN ARE PROTECTED BY U.S. AND OR FOREIGN PAT. AND PAT. PEND.

INSTALL THIMBLES & COVER R'S
FOR D.F.S. CONST. CO.

DRAWN CMP	DESIGNED	DATE 10-6-7[illegible]
CHECKED	APPROVED	SCALE NTS
INDEX SYMBOL	ORDER NO. 4[illegible]-2	DWG. NO. D-240[illegible]

NOTES

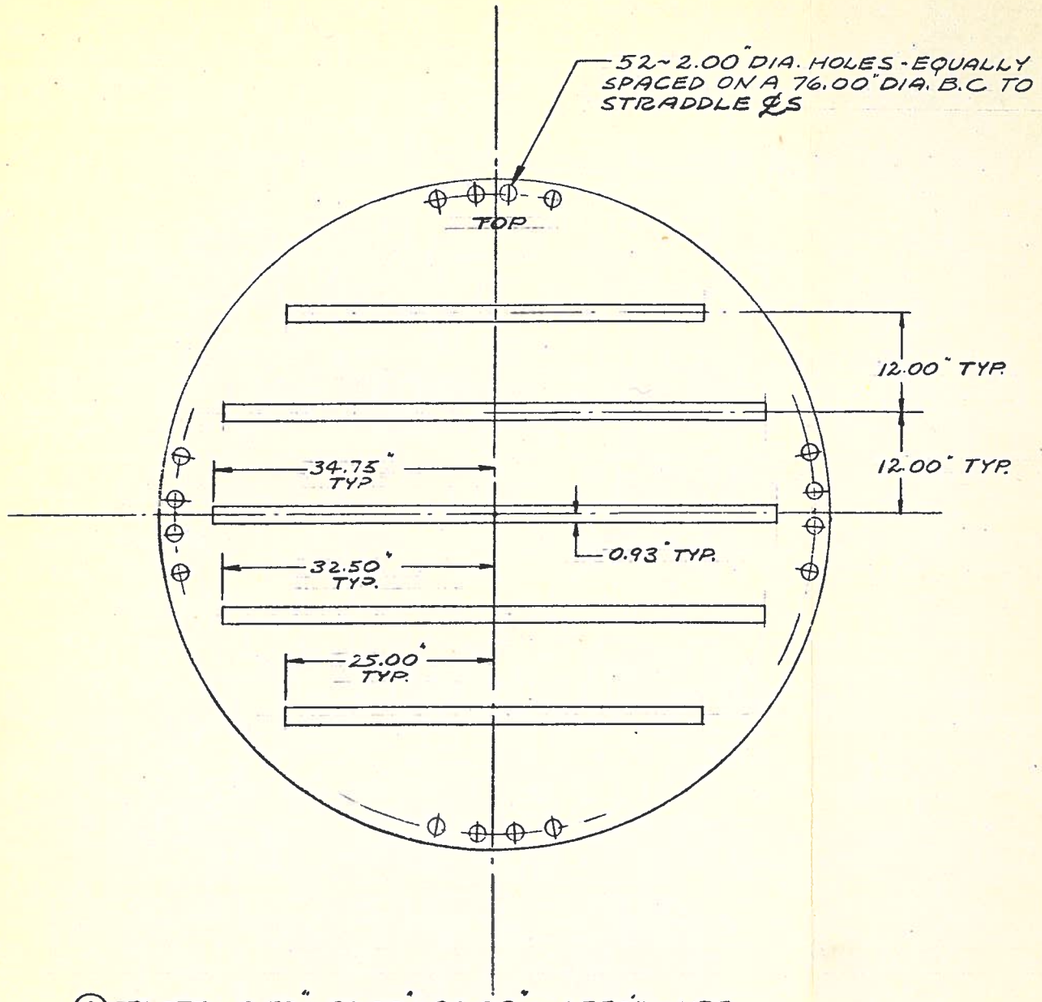

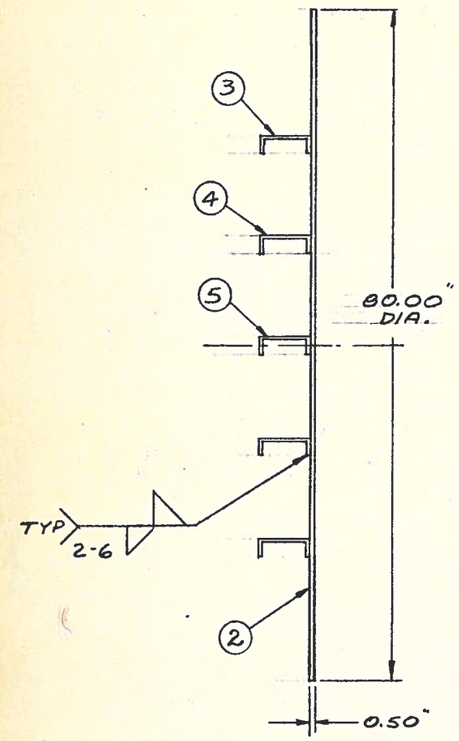

(2) PLATE ~ 0.50" × 80.00" × 80.00" ~ 1 REQ'D ~ HRS
(3) CHANNEL ~ 6.00"/8.2# × 50.00" ~ 2 REQ'D ~ HRS
(4) CHANNEL ~ 6.00"/8.2# × 65.00" ~ 2 REQ'D. ~ HRS
(5) CHANNEL ~ 6.00"/8.2# × 69.50" ~ 1 REQ'D ~ HRS

ALT.	CHANGE	BY	CKD.	DATE	ALT.	CHANGE	BY	CKD.	DATE	ALT.	CHANGE	BY	CKD.	DATE

RODNEY HUNT COMPANY, ORANGE, MASS., 01364

THIS PRINT IS THE PROPERTY OF RODNEY HUNT COMPANY THOSE WHO ACCEPT THIS PRINT AGREE THAT IT SHALL NOT BE GIVEN, LOANED, EXHIBITED OR COPIED AND THAT IT SHALL BE RETURNED UPON REQUEST TO RODNEY HUNT COMPANY NOVEL AND PATENTABLE FEATURES SHOWN ARE PROTECTED BY U.S. AND OR FOREIGN PAT. AND PAT. PEND.

DETAIL ~ COVER PLATE FOR 66.00" DIA. WALL THIMBLE

DRAWN R.A. Powers	DESIGNED	DATE 2-11-75
CHECKED	APPROVED	SCALE 1"=1'-0"
INDEX SYMBOL	ORDER NO.	DWG. NO. D-24298

ISSUED

K+E MADE IN U.S.A. D.L.M. P-221

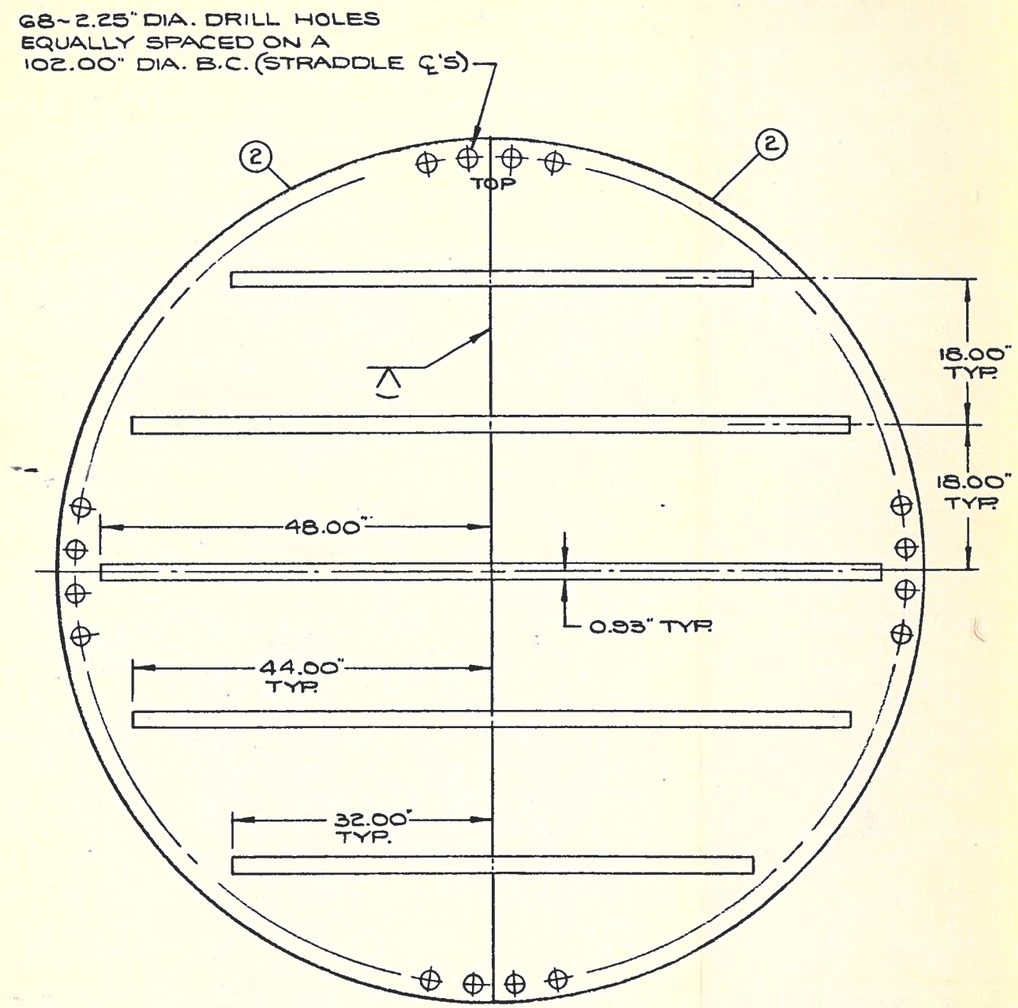

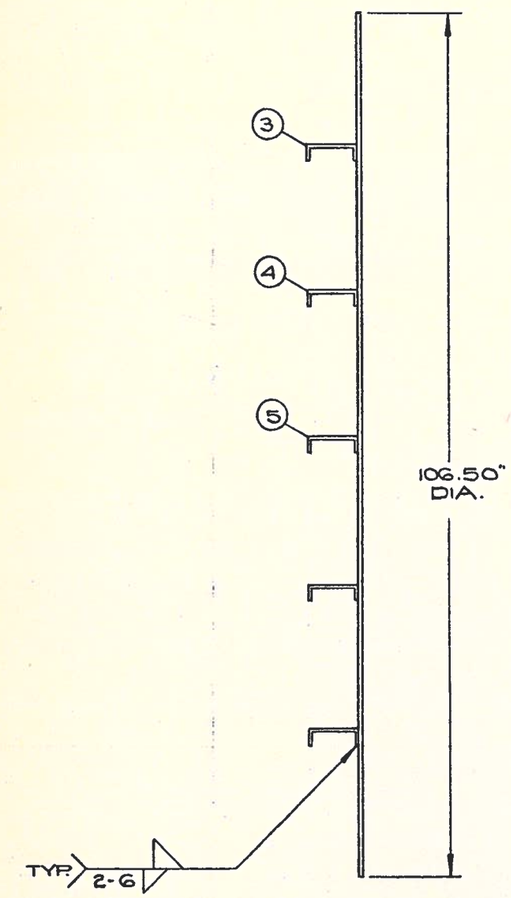

(2) PLATE~ 0.50"X 53.25"X106.50"~2 REQ'D~ STL.

(3) CHANNEL~ 6.00" [@ 8.2#/FT. X 64.00" LG ~ 2 REQ'D ~ STL.

(4) CHANNEL~6.00" [@ 8.2#/FT. X 88.00" LG~2 REQ'D~STL.

(5) CHANNEL~6.00"[@ 8.2#/FT. X 96.00" LG~ 1 REQ'D~STL.

ALT.	CHANGE	BY	CKD.	DATE	ALT.	CHANGE	BY	CKD.	DATE	ALT.	CHANGE	BY	CKD.	DATE

RODNEY HUNT COMPANY, ORANGE, MASS., 01364

THIS PRINT IS THE PROPERTY OF RODNEY HUNT COMPANY THOSE WHO ACCEPT THIS PRINT AGREE THAT IT SHALL NOT BE GIVEN, LOANED, EXHIBITED OR COPIED AND THAT IT SHALL BE RETURNED UPON REQUEST TO RODNEY HUNT COMPANY NOVEL AND PATENTABLE FEATURES SHOWN ARE PROTECTED BY U.S. AND OR FOREIGN PAT, AND PAT. PEND.

DETAIL: COVER PLATE FOR 90" DIA. WALL THIMBLE

DRAWN CAP	DESIGNED	DATE 12-3-74
CHECKED	APPROVED	SCALE 1" = 1'
INDEX SYMBOL	ORDER NO.	DWG. NO. D-24057

K+E ALBANENE DRAWING TAPES B.L.M. 4832

ISSUED

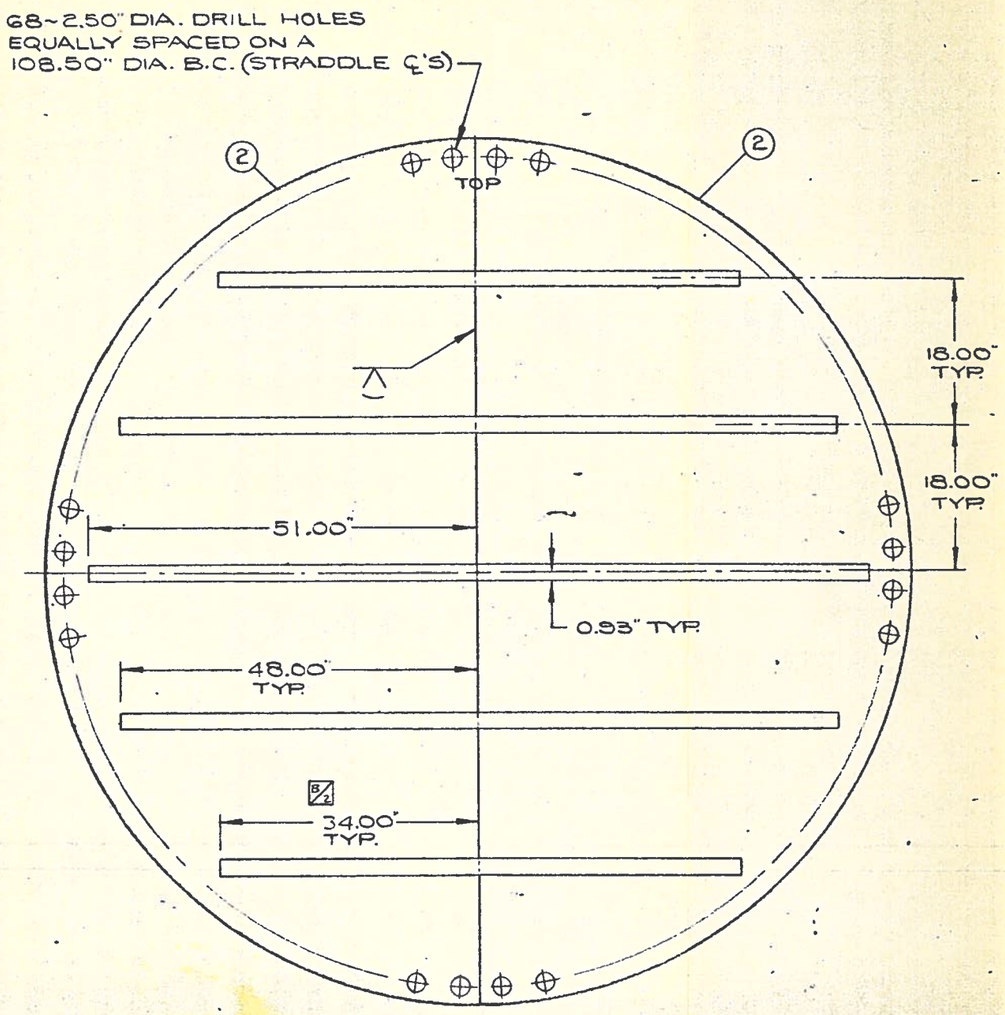

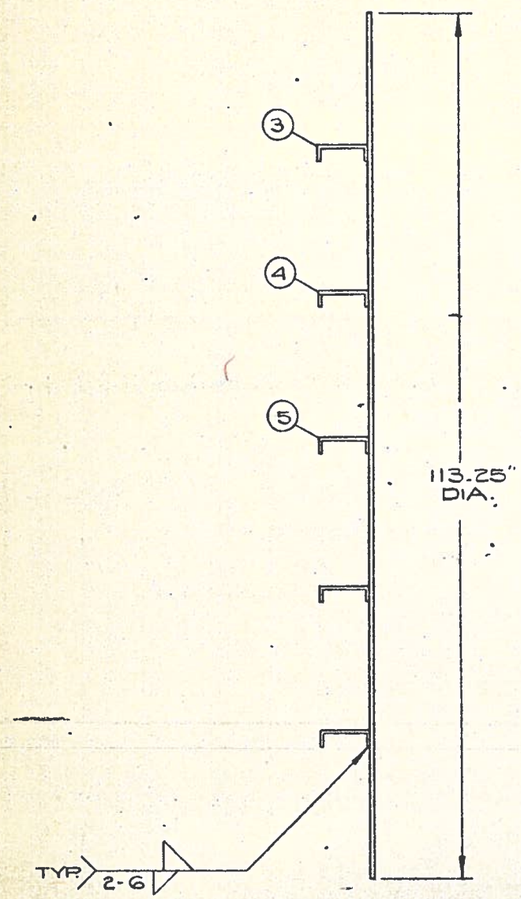

(2) PLATE~ 0.50"X 56.62"X113.25"~2 REQ'D~ STL.

(3) CHANNEL~ 6.00" [@ 13#/FT.X 68.00" LG ~ 2 REQ'D ~ STL. B/1

(4) CHANNEL~6.00" [@ 13#/FT. X 96.00" LG~2 REQ'D~STL.

(5) CHANNEL~6.00" [@ 13#/FT. X102.00" LG~1 REQ'D~STL.
A

ALT.	CHANGE	BY	CKD.	DATE	ALT.	CHANGE	BY	CKD.	DATE	ALT.	CHANGE	BY	CKD.	DATE
A	13#/FT WAS 8.2#/FT.	CAP		5-28-75										
B/1	68.00" WAS 72.00"	CAP		8-28-75										
B/2	34.00" WAS 36.00"	CAP		8-28-75										

RODNEY HUNT COMPANY, ORANGE, MASS., 01364

THIS PRINT IS THE PROPERTY OF RODNEY HUNT COMPANY THOSE WHO ACCEPT THIS PRINT AGREE THAT IT SHALL NOT BE GIVEN, LOANED, EXHIBITED OR COPIED AND THAT IT SHALL BE RETURNED UPON REQUEST TO RODNEY HUNT COMPANY NOVEL AND PATENTABLE FEATURES SHOWN ARE PROTECTED BY U.S. AND OR FOREIGN PAT. AND PAT. PEND.

DETAIL: COVER PLATE FOR 96" DIA. WALL THIMBLE

DRAWN CAP	DESIGNED	DATE 12-3-74
CHECKED	APPROVED	SCALE 1" = 1'
INDEX SYMBOL	ORDER NO.	DWG. No. D-24056

K+E ALBANENE® TRACING PAPER S.L.M. 4632

ISSUED

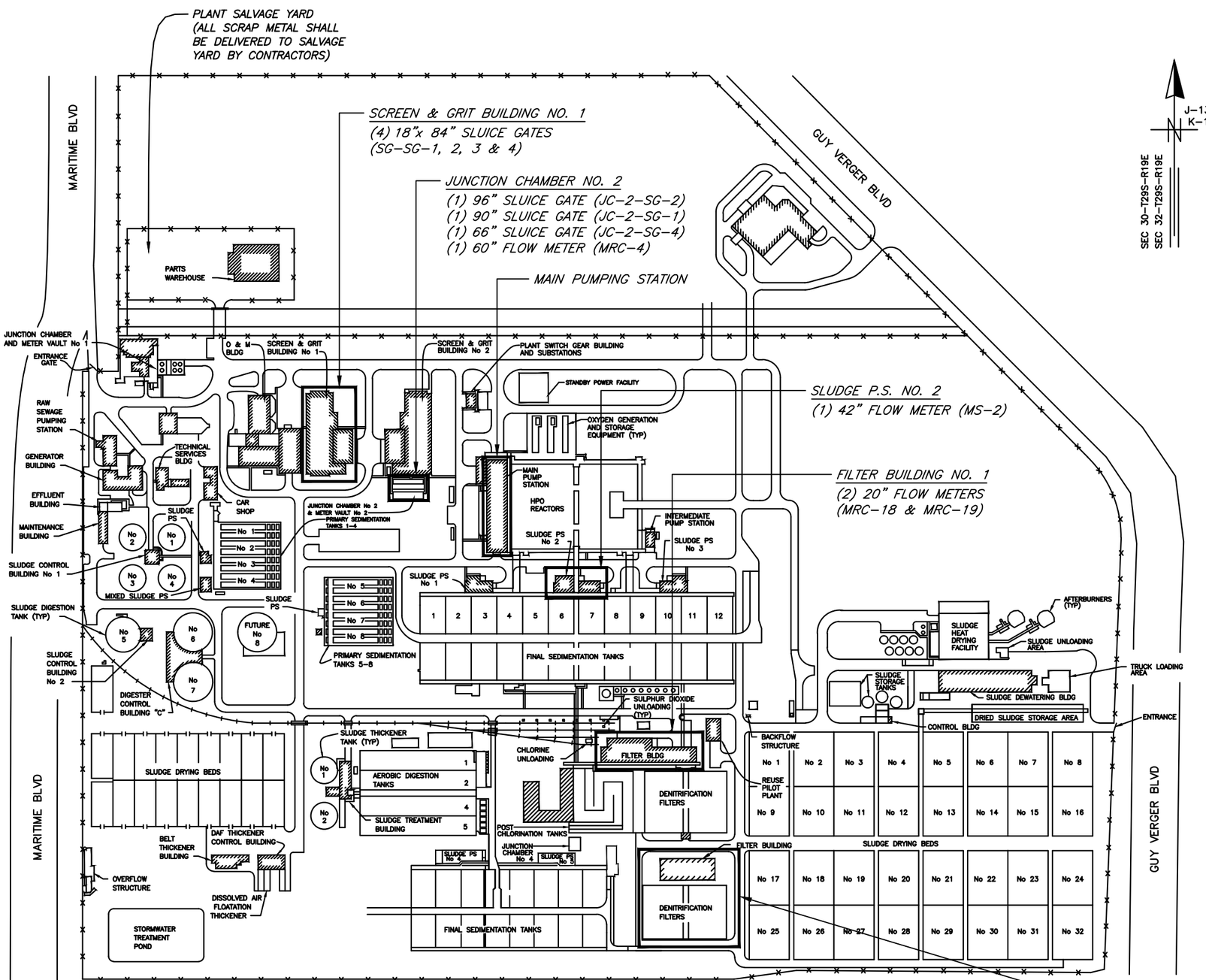

PROJECT LOCATIONS

INDEX

	SHEET	DESCRIPTION
	1	COVER SHEET
	2	PROJECT MAP & INDEX
	3	AERIAL VIEW/GENERAL NOTES
	4	JUNCTION CHAMBER NO. 2 & MAIN PUMPING STATION AERIAL VIEW
	5	JUNCTION CHAMBER NO. 2 PLAN VIEW
	6	JUNCTION CHAMBER NO. 2 SECTION VIEWS
	7	MAIN PUMPING STATION – STOP LOG LOCATION
	8	MAIN PUMPING STATION – SECTION VIEW
	9	SCREEN & GRIT BLDG. #1 – PLAN VIEW
	10	SLUDGE PS #2 – DEMOLITION PLAN
	10A	SLUDGE PS #2 – DEMOLITION PLAN VIEW
	11	SLUDGE PS #2 – PROPOSED PLAN
	11A	SLUDGE PS #2 – PROPOSED PLAN VIEW
1	11B	TEMPORARY PIPE REMOVAL – SECTION VIEW
1	11C	TEMPORARY BYPASS PLAN
	12	DENITRIFICATION FILTERS (21–36) – DEMOLITION PLAN
	12A	DEMOLITION SECTION VIEW DENITRIFICATION FILTERS (21–36)(16" FLOW METERS)
	13	DENITRIFICATION FILTERS (21–36) – PROPOSED PLAN
	13A	PROPOSED SECTION VIEW DENITRIFICATION FILTERS (21–36)(16" FLOW METERS)
	14	FILTER BLDG. #1 – DEMOLITION PLAN
	14A	FILTER BLDG. #1 – DEMOLITION PLAN
	15	FILTER BLDG. #1 – PROPOSED PLAN
	15A	FILTER BLDG. #1 – SECTION VIEW
	16	EX. REMOVABLE SLAB SECTION TYPE B
1	16A	HARNESS COUPLING DETAIL
	17	GENERAL NOTES AND SCOPE OF WORK
	18	SLUICE GATE REPLACEMENT OVERALL ELECTRICAL SITE PLAN
	19	INDEX SCHEDULES AND GENERAL NOTES
	20	SCREEN & GRIT BLDG NO. 2, JC NO. 2 AND METER VAULT NO. 2 SITE PLAN
	21	JUNCTION CHAMBER NO. 2 AND METER VAULT NO. 2 SITE PLAN
	22	SCREEN & GRIT BLDG NO. 2, ELECTRICAL ROOM PLAN AND DETAILS
	23	JC–2–SG–1, JC–2–SG–2 AND JC–2–SG–4 CONTROL SCHEMATIC
	24	SCREEN AND GRIT BLDG NO. 2, CONDUIT AND CABLE SCHEDULE
	25	SCREEN & GRIT BUILDING NO. 1 PROPOSED ELECTRICAL PLAN ELEVATION 15'–6"
	26	EXISTING MCC–28 ELEVATION AND DETAILS
	27	SCREEN & GRIT BUILDING NO. 1 CONDUIT AND CABLE SCHEDULE
	28	SLUDGE PUMP BUILDING NO. 2 PROPOSED ELECTRICAL PLAN ELEVATION 11'–0"
	29	SLUDGE PUMP BUILDING NO. 2 REMOTE FLOW TRANSMITTER DETAILS
	30	FILTER BUILDING NO. 2 PROPOSED ELECTRICAL PLAN 4'–0"
	31	FILTER BUILDING NO. 2 PROPOSED ELECTRICAL PLAN ELEVATION 11'–0"
	32	DENITRIFICATION FILTERS ELECTRICAL DETAILS
	33	DENITRIFICATION FILTERS CONDUIT AND CABLE SCHEDULES
	34	FILTER BUILDING NO. 1 PROPOSED ELECTGRICAL PLAN ELEVATION 3'–6"
	35	EXISTING CONDITIONS PLAN ELEVATIONS 11'–0"
	36	FILTER BUILDING NO. 1 PROPOSED ELECTRICAL PLAN ELEVATION 23'–6"
	37	FILTER BUILDING NO. 1 ELECTRICAL DETAILS (SHEET 1 OF 2)
	38	FILTER BUILDING NO. 1 ELECTRICAL DETAILS (SHEET 2 OF 2)
	39	FILTER BUILDING NO. 1 CONDUIT AND CABLE SCHEDULE
	40	TYPICAL FLOW METER REMOTE TRANSMITTER WIRING SCHEMATIC

JACINTO CARLOS FERRAS, P.E. #49454
DESIGN DIVISION HEAD
WASTEWATER DEPARTMENT

No.	DATE	REVISIONS
3		
2		
1	12/18/19	ADDENDUM: ADDED REVISED SHEETS

DES: MS
DRN: JHJ
CKD:
DATE: 12/18/19

CITY of TAMPA
WASTEWATER DEPARTMENT

HFCAWTP JUNCTION CHAMBER 2
SLUICE GATE REPLACEMENT
PROJECT MAP & INDEX

SHEET 2

User: ast3 Drawing Name: K:\Wastewater Projects\HFC ATWP Junction Chamber No.2 Sluice Gate Replacement\Drafting\DWG\HFCAWTP Junction Chamber 2 Sluice Gate Replacement 18-C-000024.dwg
Layout: SP2 Dec 21, 2018 - 12:16pm

GENERAL NOTES:

G–1 ALL WORK ASSOCIATED WITH REPLACING THE SLUICE GATES AT JUNCTION CHAMBER #2 & MRC–4 FLOW METER MUST BE DONE DURING THE DRY SEASON (DECEMBER THRU MAY). WE WILL ALSO REQUIRE THE REPLACEMENT OF THE SLUICE GATES IN SCREEN & GRIT BUILDING #1 TO BE DONE IN THE DRY SEASON.

G–2 REPLACING THE 96", 90", & 66" SLUICE GATE REQUIRES TAKING PRIMARY SEDIMENTATION TANKS 1–8 (ALL TANKS) OUT OF SERVICE. ONLY ONE SET OF PRIMARY SEDIMENTATION TANKS TO BE OUT OF SERVICE AT A TIME. CONTRACTOR SHALL PERFORM THE WORK AS PLANT OPERATIONS ALLOW. CONTRACTOR SHALL PROVIDE THE CITY WITH A MINIMUM ONE WEEK ADVANCE NOTICE OF WORK. WORK SHALL NOT COMMENCE UNTIL ALL EQUIPMENT IS LOCATED ON–SITE.

G–3 CONTRACTOR SHALL COORDINATE ALL CONSTRUCTION ACTIVITIES WITH WASTEWATER PERSONNEL AND PUMPING STATION OPERATIONS.

G–4 CONTRACTOR SHALL INSTALL TWO CITY SUPPLIED STEEL STOP LOGS TO ISOLATE FLOW, AS SHOWN ON SHEET 4. STOP LOGS ARE REQUIRED TO TO INSTALL THE SLUICE GATES.

G–5 ANY MODIFICATIONS TO THE EXISTING HARNESS TYPE STEEL COUPLINGS SUCH AS WELDING NEW HARNESS LUGS TO FABRICATE SECTIONS OF STEEL PIPE OR OTHER SIMILAR TYPE CHANGES SHALL BE IN ACCORDANCE WITH TYPE A HARNESS SLEEVE TYPE COUPLING DETAIL ON SHEET 16A

G–6 THE PROPOSED STEEL PIPING SHALL HAVE AN INTERIOR CEMENT MORTAR LINING AND THE EXTERIOR SHALL BE PAINTED IN ACCORDANCE TO THE SPECIFICATIONS.

⚠1 G–7 TEMPORARY PIPING FOR DEWATERING, BYPASSING OR DRAINING PURPOSES SHALL BE HDPE PIPE WITH A MINIMUM WORKING PRESSURE OF 80 PSI. PIPE JOINTS SHALL BE RESTRAINED AND SHALL EITHER BE FLANGED, BUTT–FUSED, CAM–LOCK, OR BAUER FITTINGS. CONTRACTOR MAY SUBMI ALTERNATE TEMPORARY PIPING SYSTEM FOR REVIEW AND APPROVAL.

⚠1 G–8 CONTRACTOR SHALL REPLACE THE GASKETS FOR ALL DISASSEMBLED HARNESS COUPLINGS AND PIPES THAT ARE DESIGNATED TO BE REMOVED AND REPLACED. EXISTING HARDWARE SUCH AS NUTS AND BOLTS CAN BE REUSED. THE MANUFACTURER OF THE EXISTING HARNESS TYPE COUPLINGS IS UNKNOWN AND WILL NEED TO BE FIELD VERIFIED BY THE CONTRACTOR IN ADVANCE TO ORDER THE CORRECT GASKETS.

⚠1 G–9 AT LOCATIONS WHERE THE PROPOSED PIPING IS BEING CONNECTED TO AN EXISTING HARNESS COUPLING, THE PROPOSED PIPING SHALL BE FABRICATED WITH WELDED HARNESS LUGS AS SHOWN ON SHEET 16A. CONTRACTOR MUST FIELD VERIFY DIMENSIONS OF EXISTING COUPLING AND HARNESS LUG LOCATIONS BEFORE SUBMITTING FABRICATION DRAWINGS FOR REVIEW. EXISTING HARNESS TIE RODS CAN BE REUSED.

STOP LOG NOTES:

SL–1 CONTRACTOR SHALL INSTALL THREE (3), 18'x6'–6", 304 S/S STOP LOGS AT JUNCTION CHAMBER #2 & MAIN PUMPING STATION TO ISOLATE EFFLUENT CONDUITS, AS REQUIRED. THE CITY OF TAMPA SHALL PROVIDE STOP LOGS. THE CONTRACTOR SHALL BE RESPONSIBLE FOR SAFELY TRANSPORTING STOP LOGS FROM THE AWTP HOUSING WAREHOUSE TO JUNCTION CHAMBER #2.

SL–2 FASTEN RUBBER MATERIAL TO WETTED PERIMETER OF STOP LOGS, PRIOR TO INSTALLATION, TO PREVENT LEAKAGE AROUND STOP LOGS ONCE INSTALLED.

SL–3 AFTER STOP LOGS ARE INSTALLED, CONTRACTOR SHALL DEWATER WET WELL/CHAMBER WITH ANY PUMPS AND PIPING NECESSARY TO DISCHARGE INTO ACTIVE WET WELL. PUMPS SHALL BE PROPERLY SIZED TO HANDLE ANY LEAKAGE FROM STOP LOG. DEWATERING PUMP MAY BE REQUIRED FOR ENTIRE DURATION TO FACILITATE WORK REQUIRED IN THIS CONTRACT.

SL–4 CONTRACTOR SHALL MINIMIZE ANY STOP LOG LEAKAGE AS NECESSARY TO FACILITATE THE WORK REQUIRED IN THIS CONTRACT. LEAKAGE MAY BE REDUCED BY INSTALLING VISQUEEN ROLLS BEHIND (WATER SIDE) OF STOP LOGS, OR INJECT OAKUM OR A CHEMICAL GROUT. ALL ITEMS USED SHALL BE CONTAINED, REMOVED AND PROPERLY DISCARDED OF AFTER WORK HAS COMPLETED.

SL–5 AT THE COMPLETION OF THIS PROJECT THE STOP LOGS SHALL BE RETURNED TO THE AWTP HOUSING WAREHOUSE. CONTRACTOR WILL BE RESPONSIBLE FOR REPAIRING OR REPLACING ANY STOP LOGS AND NECESSARY HARDWARE THAT MAY BE DAMAGED DURING CONSTRUCTION TO PRE–CONSTRUCTION CONDITION OR BETTER.

⚠1 ALLOWABLE SHUT DOWN DURATIONS

SD–1 JUNCTION CHAMBER NO.2 BUILDING: (PHASE 1, PHASE 2, PHASE 3) EACH PHASE WILL HAVE APPROXIMATELY THREE WEEKS ALLOWED FOR SHUT DOWN. THIS WORK MUST OCCUR IN THE NON–HURRICANE SEASON (DECEMBER TO MAY)

SD–2 SCREEN AND GRIT BUILDING #1: (PHASE 4, PHASE 5) EACH PHASE WILL HAVE APPROXIMATELY THREE WEEKS ALLOWED FOR SHUT DOWN.

SD–3 SLUDGE P.S. #2 BUILDING: TWO WEEKS WILL BE ALLOWED FOR SHUT DOWN.

SD–4 FILTER BUILDING NO. 1 & DENITRIFICATION FILTERS: (MRC–18, MRC–19, FE–53 & FE–54) ONLY ONE LINE WILL BE ALLOWED TO BE SHUT DOWN AT A TIME. (FOR BOTH BUILDINGS) TWO DAYS WILL BE ALLOWED FOR SHUT DOWN ON EACH LINE. ONE DAY WILL BE REQUIRED BETWEEN SHUTDOWNS.

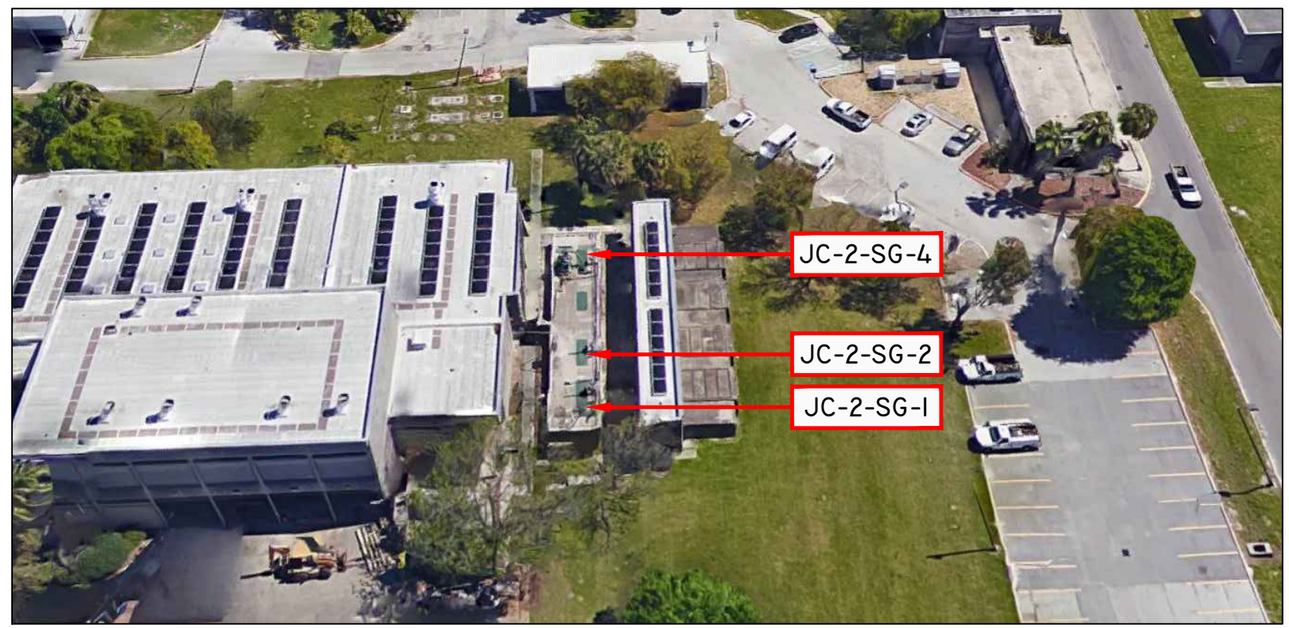

JACINTO CARLOS FERRAS, P.E. #49454
DESIGN DIVISION HEAD
WASTEWATER DEPARTMENT

No.	DATE	REVISIONS
3		
2		
⚠1	12/18/19	ADDENDUM: REVISED AND ADDED NOTES

DES: MS
DRN: JHJ
CKD:
DATE: 12/18/19

CITY of TAMPA
WASTEWATER DEPARTMENT

HFCAWTP JUNCTION CHAMBER 2
SLUICE GATE REPLACEMENT
GENERAL NOTES / AERIAL VIEW

SHEET
3

User: ss13 Drawing Name: K:\WastewaterProjects\HFC ATWP Junction Chamber No.2 Sluice Gate Replacement\Drafting\DWG\HFCAWTP Junction Chamber 2 Sluice Gate Replacement 18-C-000024.dwg
Layout – SHT 3 Dec 23, 2019 – 12:18pm

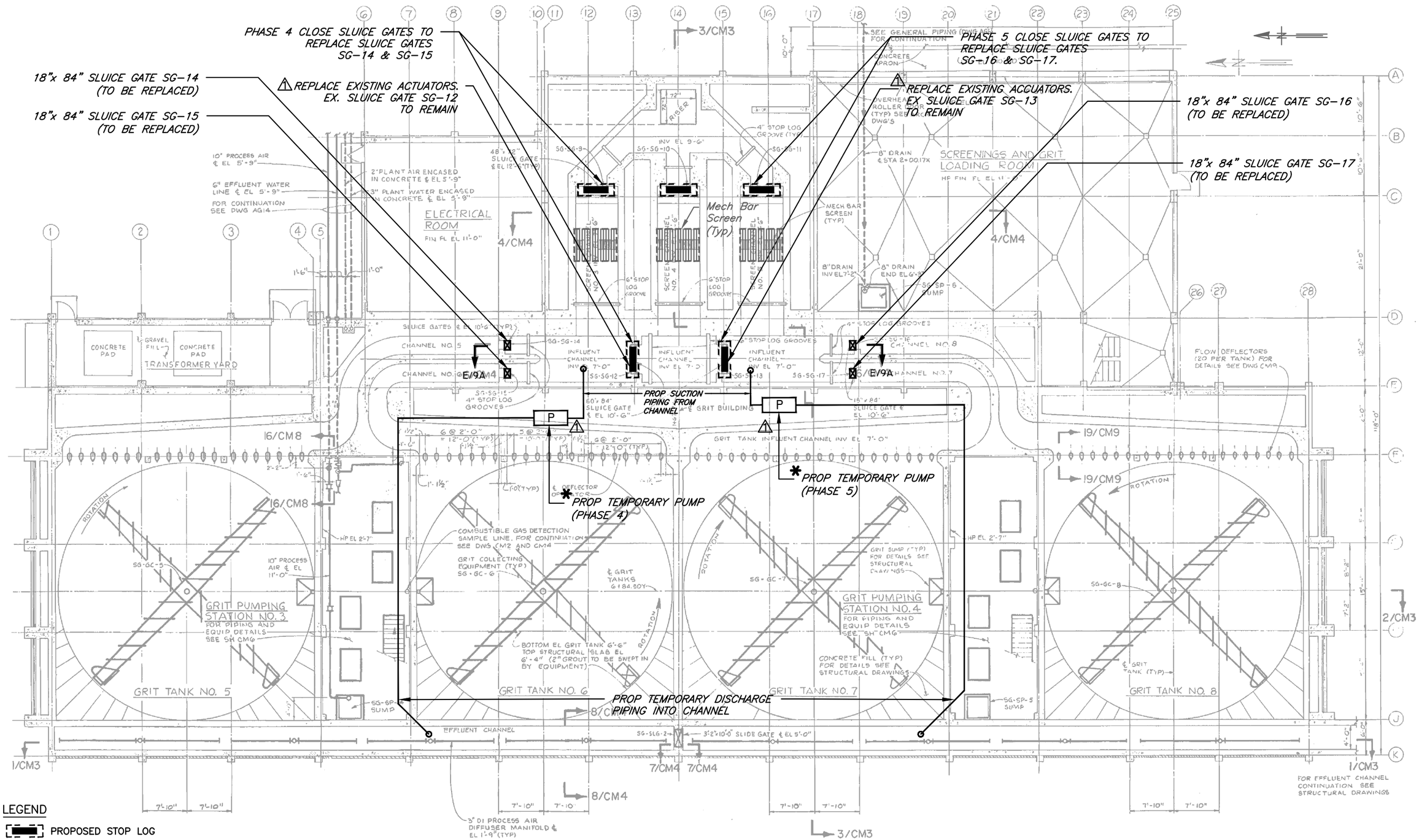

PLAN VIEW - SCREEN & GRIT BUILDING #1 (4 - 18" x 84" SLUICE GATES)

SCALE: 1/16" = 1'-0"

* PUMPS ARE REQUIRED TO DEWATER CHANNELS AND DISCHARGE WATER INTO EFFLUENT CHANNEL.

JACINTO CARLOS FERRAS, PE #49454
DESIGN DIVISION HEAD
WASTEWATER DEPARTMENT

No.	DATE	REVISIONS
2		
1	12/18/19	ADDENDUM: ADDED TEMPORARY DEWATERING SYSTEM & ELECTRICAL ACTUATOR REPLACEMENT SG-12, SG-13

DES: MS
DRN: JHJ
CKD:
DATE: 12/18/19

CITY of TAMPA
WASTEWATER DEPARTMENT

HFCAWTP JUNCTION CHAMBER 2
SLUICE GATE REPLACEMENT
SCREEN & GRIT BLDG. #1 - PLAN VIEW

SHEET 9

User: ss13 Drawing Name: K:\WasteWater Projects\HFC ATWP Junction Chamber No.2 Sluice Gate Replacement\Drafting\DWG\HFCAWTP Junction Chamber 2 Sluice Gate Replacement 18-C-000024.dwg
Layout- Dec 23, 2019 - 12:18pm

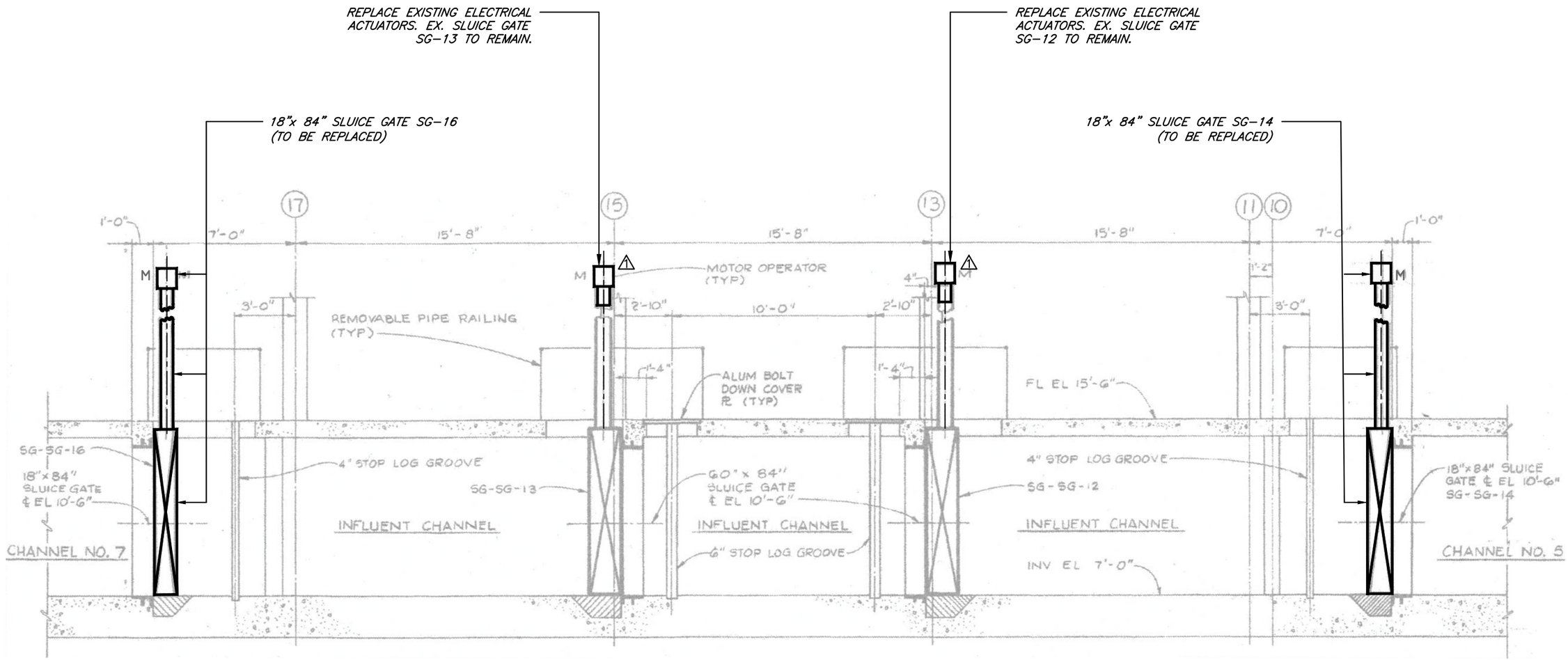

SECTION E/9

SECTION VIEW - SCREEN & GRIT BUILDING #1 (4 - 18" x 84" SLUICE GATES)

SCALE: 3/32" = 1'-0"

	No.	DATE	REVISIONS				
JACINTO CARLOS FERRAS, PE #49454 DESIGN DIVISION HEAD WASTEWATER DEPARTMENT	3			DES: MS DRN: JHJ CKD: DATE: 12/18/19	CITY of TAMPA WASTEWATER DEPARTMENT	HFCAWTP JUNCTION CHAMBER 2 SLUICE GATE REPLACEMENT SCREEN & GRIT BLDG. #1 - SECTION VIEW	SHEET 9A
	2						
	1	12/1/19	ADDENDUM: ADDED ELECTRICAL ACUATORS (S-12, 13)				

User: ss13 Drawing Name: K:\WastewaterProjects\HFC ATWP Junction Chamber No.2 Sluice Gate Replacement\Drafting\DWG\HFCAWTP Junction Chamber 2 Sluice Gate Replacement 18-C-00024.dwg
Layout: Dec 18, 2019 - 10:28am

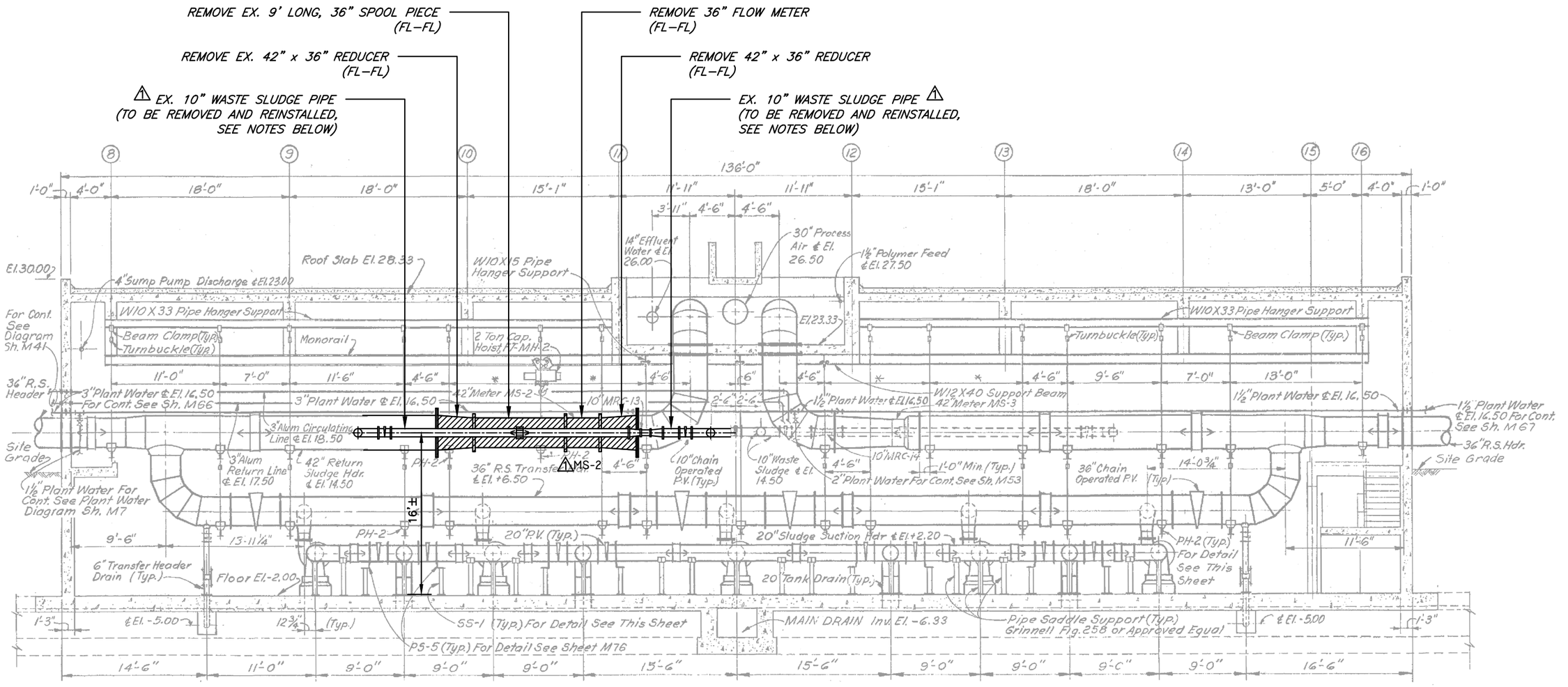

DEMOLITION - SECTION VIEW - SLUDGE PS No. 2 (42" FLOW METER)

SCALE: 3/32" = 1'-0"

SHADED AREAS ON THIS SHEET INDICATE PIPING AND EQUIPMENT TO BE REMOVED

GENERAL NOTES:

1) THE USE OF THE EXISTING OVERHEAD CRANE IN BUILDING IS ALLOWED FOR THE REMOVAL AND INSTALLATION OF THE FLOW METER. THE CRANE MUST BE OPERATED BY A CITY EMPLOYEE AND AT LEAST (1) WEEK NOTICE SHALL BE GIVEN TO THE CITY.

△1 2) REFER TO SHEETS 11B FOR ADDITIONAL PIPING TO BE REMOVED AND REINSTALLED..

△1 3) REFER TO SHEET 11C FOR TEMPORARY PIPING TO FACILITATE METER REPLACEMENT

JACINTO CARLOS FERRAS, PE #49454
DESIGN DIVISION HEAD
WASTEWATER DEPARTMENT

No.	DATE	REVISIONS
3		
2		
△1	12/18/19	ADDENDUM: MISC. REVISIONS

DES: MS
DRN: JHJ
CKD:
DATE: 12/18/19

CITY of TAMPA
WASTEWATER DEPARTMENT

HFCAWTP JUNCTION CHAMBER 2
SLUICE GATE REPLACEMENT
SLUDGE PS #2 - DEMOLITION PLAN

SHEET 10

User: ss13 Drawing Name: K:\WastewaterProjects\HFC ATWP Junction Chamber No.2 Sluice Gate Replacement\Drafting\DWG\HFCATWTP Junction Chamber 2 Sluice Gate Replacement 18-C-000024.dwg
Layout- Dec 23, 2019 - 12:19pm

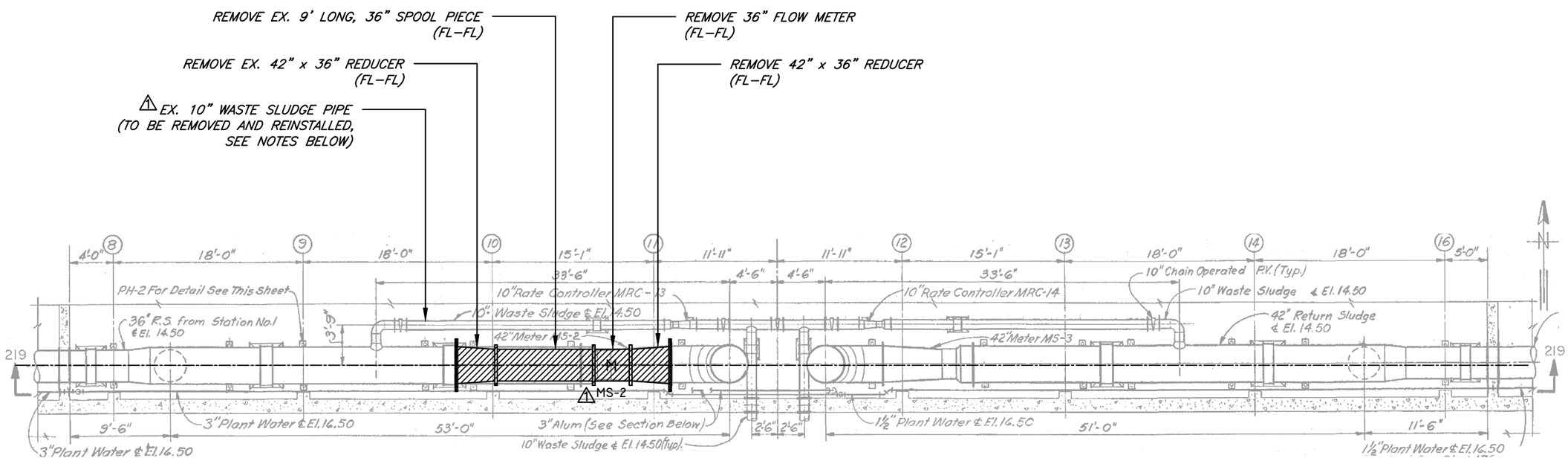

DEMOLITION - PLAN VIEW - SLUDGE PS No. 2 (42" FLOW METER)

SCALE: 3/32" = 1'-0"

SHADED AREAS ON THIS SHEET INDICATE PIPING AND EQUIPMENT TO BE REMOVED

GENERAL NOTES:

1) THE USE OF THE EXISTING OVERHEAD CRANE IN BUILDING IS ALLOWED FOR THE REMOVAL AND INSTALLATION OF THE FLOW METER. THE CRANE MUST BE OPERATED BY A CITY EMPLOYEE AND AT LEAST (1) WEEK NOTICE SHALL BE GIVEN TO THE CITY.

1 2) REFER TO SHEETS 11B FOR ADDITIONAL PIPING TO BE REMOVED AND REINSTALLED..

1 3) REFER TO SHEET 11C FOR TEMPORARY PIPING TO FACILITATE METER REPLACEMENT

JACINTO CARLOS FERRAS, PE #49454
DESIGN DIVISION HEAD
WASTEWATER DEPARTMENT

No.	DATE	REVISIONS
3		
2		
1	12/18/19	ADDENDUM: MISC. REVISIONS

DES: MS
DRN: JHJ
CKD:
DATE: 12/18/19

CITY of TAMPA
WASTEWATER DEPARTMENT

HFCAWTP JUNCTION CHAMBER 2
SLUICE GATE REPLACEMENT
SLUDGE PS #2 - DEMOLITION PLAN VIEW

SHEET 10A

User: as15 Drawing Name: K:\WastewWater Projects\HFC ATWP Junction Chamber No.2 Sluice Gate Replacement\Drafting\DWG\HFCAWTP Junction Chamber 2 Sluice
Layout: Dec 23, 2019 - 12:18pm

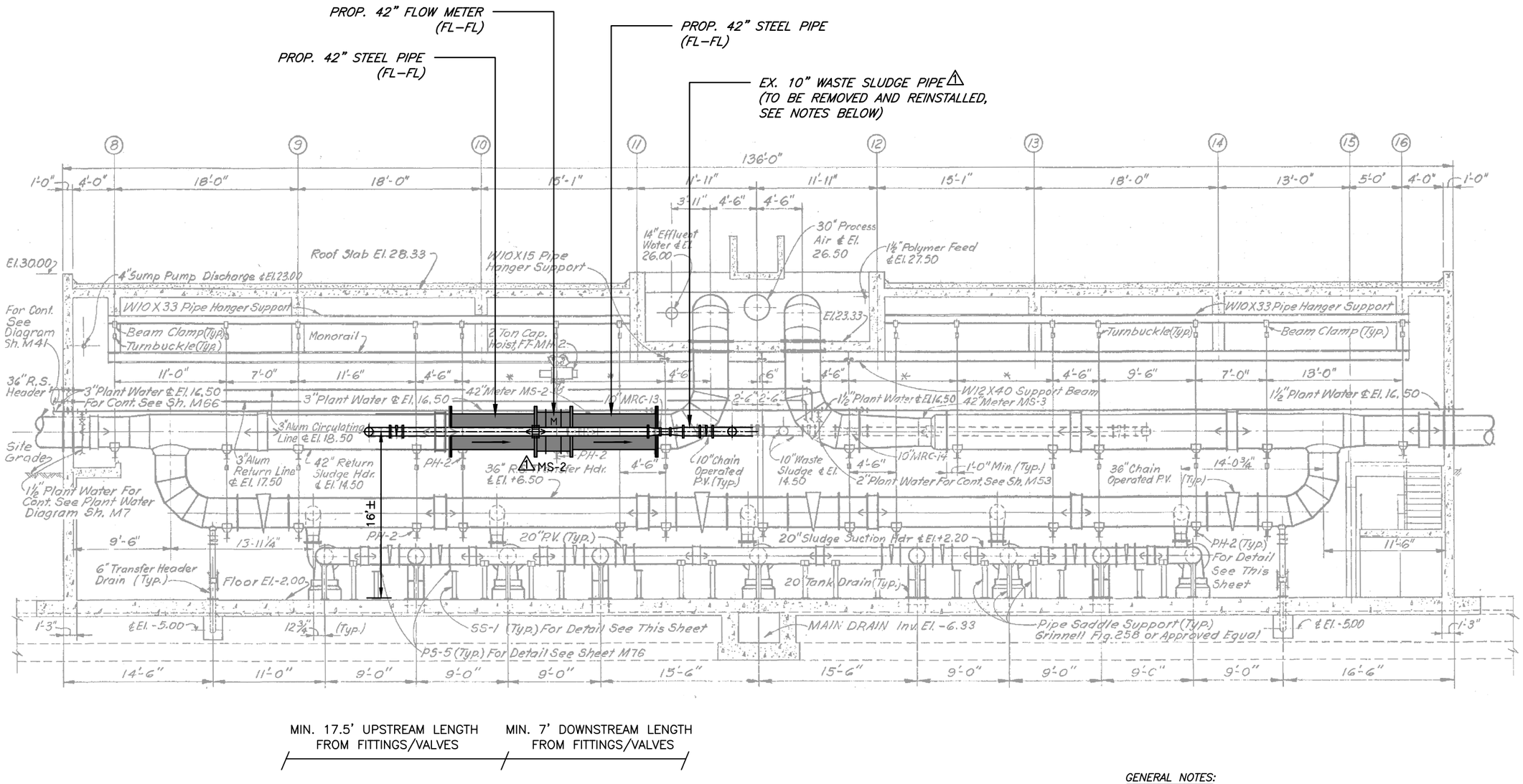

SHADED AREAS ON THIS SHEET INDICATE PIPING AND EQUIPMENT TO BE INSTALLED

PROPOSED - SECTION VIEW - SLUDGE PS No. 2 (42" FLOW METER)

SCALE: 3/32" = 1'-0"

GENERAL NOTES:

1) THE USE OF THE EXISTING OVERHEAD CRANE IN BUILDING IS ALLOWED FOR THE REMOVAL AND INSTALLATION OF THE FLOW METER. THE CRANE MUST BE OPERATED BY A CITY EMPLOYEE AND AT LEAST (1) WEEK NOTICE SHALL BE GIVEN TO THE CITY.

△1 2) REFER TO SHEETS 11B FOR ADDITIONAL PIPING TO BE REMOVED AND REINSTALLED..

△1 3) REFER TO SHEET 11C FOR TEMPORARY PIPING TO FACILITATE METER REPLACEMENT

JACINTO CARLOS FERRAS, PE #49454
DESIGN DIVISION HEAD
WASTEWATER DEPARTMENT

No.	DATE	REVISIONS
3		
2		
△1	12/18/19	ADDENDUM: MISC. REVISIONS

DES: MS
DRN: JHJ
CKD:
DATE: 12/18/19

CITY of TAMPA
WASTEWATER DEPARTMENT

HFCAWTP JUNCTION CHAMBER 2
SLUICE GATE REPLACEMENT
SLUDGE PS #2 - PROPOSED SECTION VIEW

SHEET 11

User: sa13 Drawing Name: K:\WasteWater Projects\VFC ATWP Junction Chamber No.2 Sluice Gate Replacement\Drafting\DWG\HFCAWTP Junction Chamber 2 Sluice Gate Replacement 18-C-00024.dwg
Layout- Dec 27, 2019 - 12:59pm

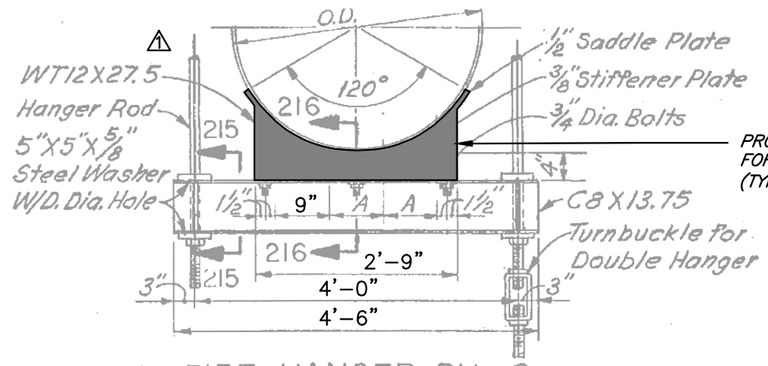

PIPE HANGER PH-2

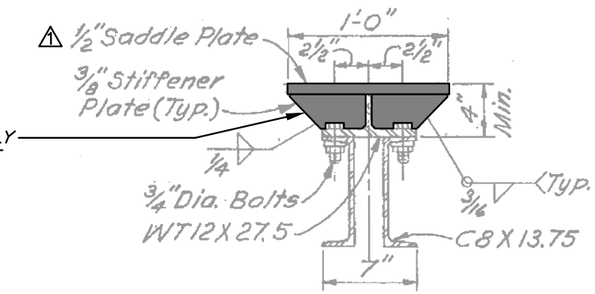

SECTION 216

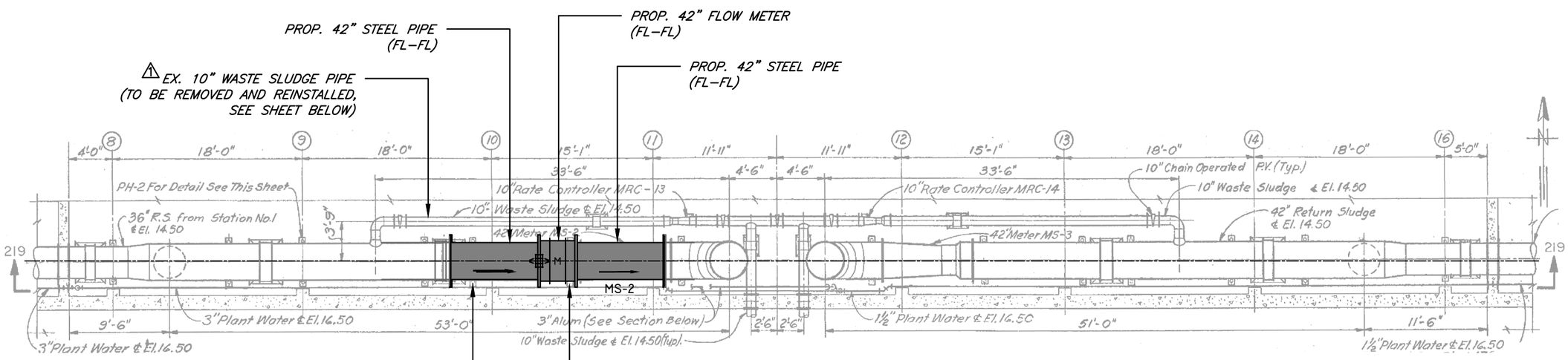

EXISTING SUPPORT TO BE REUSED

MODIFY EX. SUPPORT SADDLE TO ACCOMODATE 42" PIPE BY REPLACING SADDLE ASSEMBLY AND BOLTING IT TO EX. C8 BEAM. (SEE SHADED ASSEMBLY ON PIPE HANGER PH-2 DETAIL, THIS SHEET)

SHADED AREAS ON THIS SHEET INDICATE PIPING AND EQUIPMENT TO BE INSTALLED

PROPOSED - PLAN VIEW - SLUDGE PS No. 2 (42" FLOW METER)

SCALE: 3/32" = 1'-0"

GENERAL NOTES:

1) THE USE OF THE EXISTING OVERHEAD CRANE IN BUILDING IS ALLOWED FOR THE REMOVAL AND INSTALLATION OF THE FLOW METER. THE CRANE MUST BE OPERATED BY A CITY EMPLOYEE AND AT LEAST (1) WEEK NOTICE SHALL BE GIVEN TO THE CITY.

2) REFER TO SHEETS 11B FOR ADDITIONAL PIPING TO BE REMOVED AND REINSTALLED..

3) REFER TO SHEET 11C FOR TEMPORARY PIPING TO FACILITATE METER REPLACEMENT

JACINTO CARLOS FERRAS, PE #49454
DESIGN DIVISION HEAD
WASTEWATER DEPARTMENT

No.	DATE	REVISIONS
3		
2		
1	12/18/19	ADDENDUM: MISC. REVISIONS

DES: MS
DRN: JHJ
CKD:
DATE: 12/10/19

CITY of TAMPA
WASTEWATER DEPARTMENT

HFCAWTP JUNCTION CHAMBER 2
SLUICE GATE REPLACEMENT
SLUDGE PS #2 - PROPOSED PLAN VIEW

SHEET
11A

User: ss13 Drawing Name: K:\WasteWater Projects\HFC ATWP Junction Chamber No.2 Sluice Gate Replacement\Drafting\DWG\HFCAWTP Junction Chamber 2 Sluice Gate Replacement 18-C-00024.dwg
Layout- Dec 30, 2019 - 9:58am

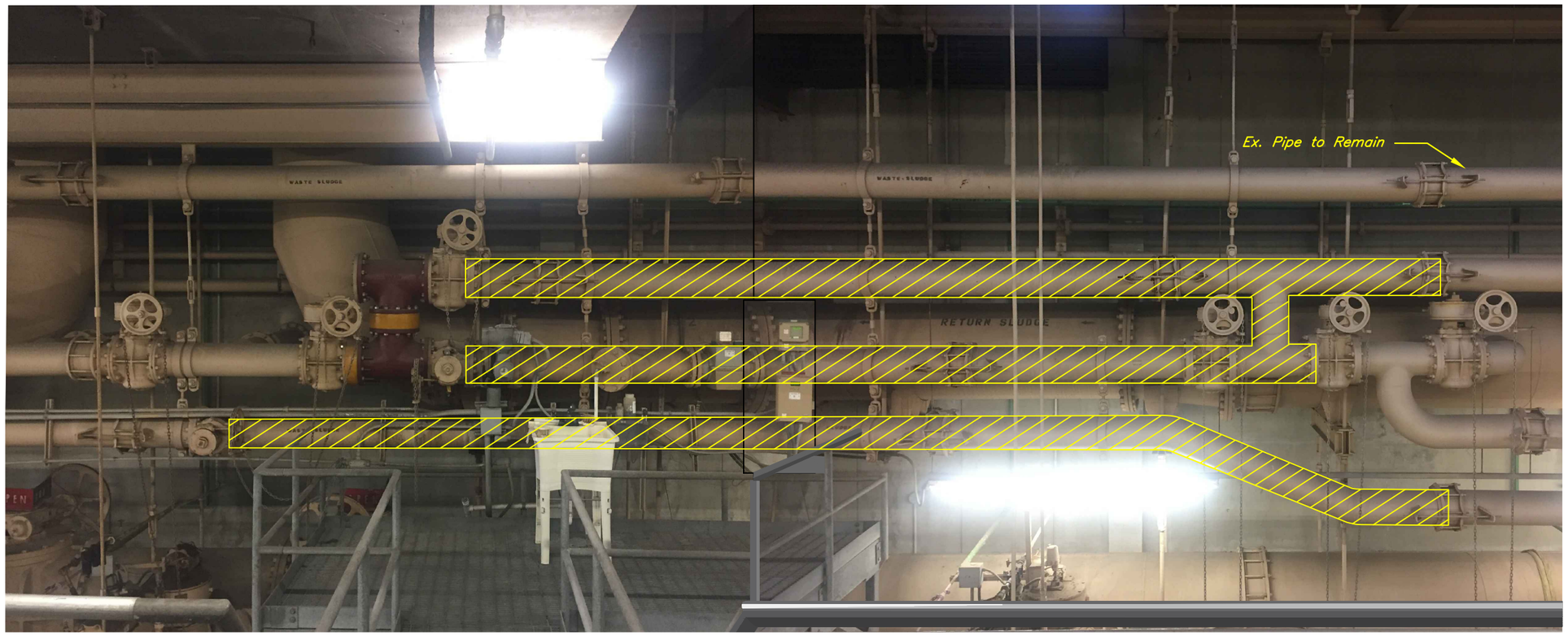

1. CONTRACTOR TO PROTECT EXISTING FLOW METER STAND AND CONDUITS ON AND ADJACENT TO PLATFORM DURING CONSTRUCTION.
2. PLATFORM IS FOR PERSONNEL LOADING ONLY.
3. CONTRACTOR SHALL REUSE EXISTING "DAISY CHAIN" TYPE SUPPORTS TO RE-INSTALL PIPING.

TEMPORARY PIPE REMOVAL - SECTION VIEW

N.T.S.

LIMITS OF PIPE REMOVAL TO FACILITATE FLOW METER INSTALLATION WORK AND RE-INSTALLATION AFTER FLOW METER WORK IS COMPLETE.

NOTE: BEFORE REMOVING PIPE SHOWN, CONTRACTOR MUST INSTALL TEMPORARY PIPING AS SHOWN ON SHEET 11C SO THAT PLANT OPERATIONS CAN DRAIN THE PIPES

JACINTO CARLOS FERRAS, PE #49454
DESIGN DIVISION HEAD
WASTEWATER DEPARTMENT

No.	DATE	REVISIONS
3		
2		
1	12/18/19	ADDENDUM: ADDED NEW SHEET

DES: MS
DRN: JHJ
CKD:
DATE: 12/18/18

CITY of TAMPA
WASTEWATER DEPARTMENT

HFCAWTP JUNCTION CHAMBER 2
SLUICE GATE REPLACEMENT
TEMPORARY PIPE REMOVAL - SECTION VIEW

SHEET
11B

User: ss13 Drawing Name: K:\WasteWater Projects\HFC ATWP Junction Chamber No.2 Sluice Gate Replacement\Drafting\DWG\HFCAWTP Junction Chamber 2 Sluice Gate Replacement 18-C-000024.dwg
Layout- Dec 23, 2019 - 12:18pm

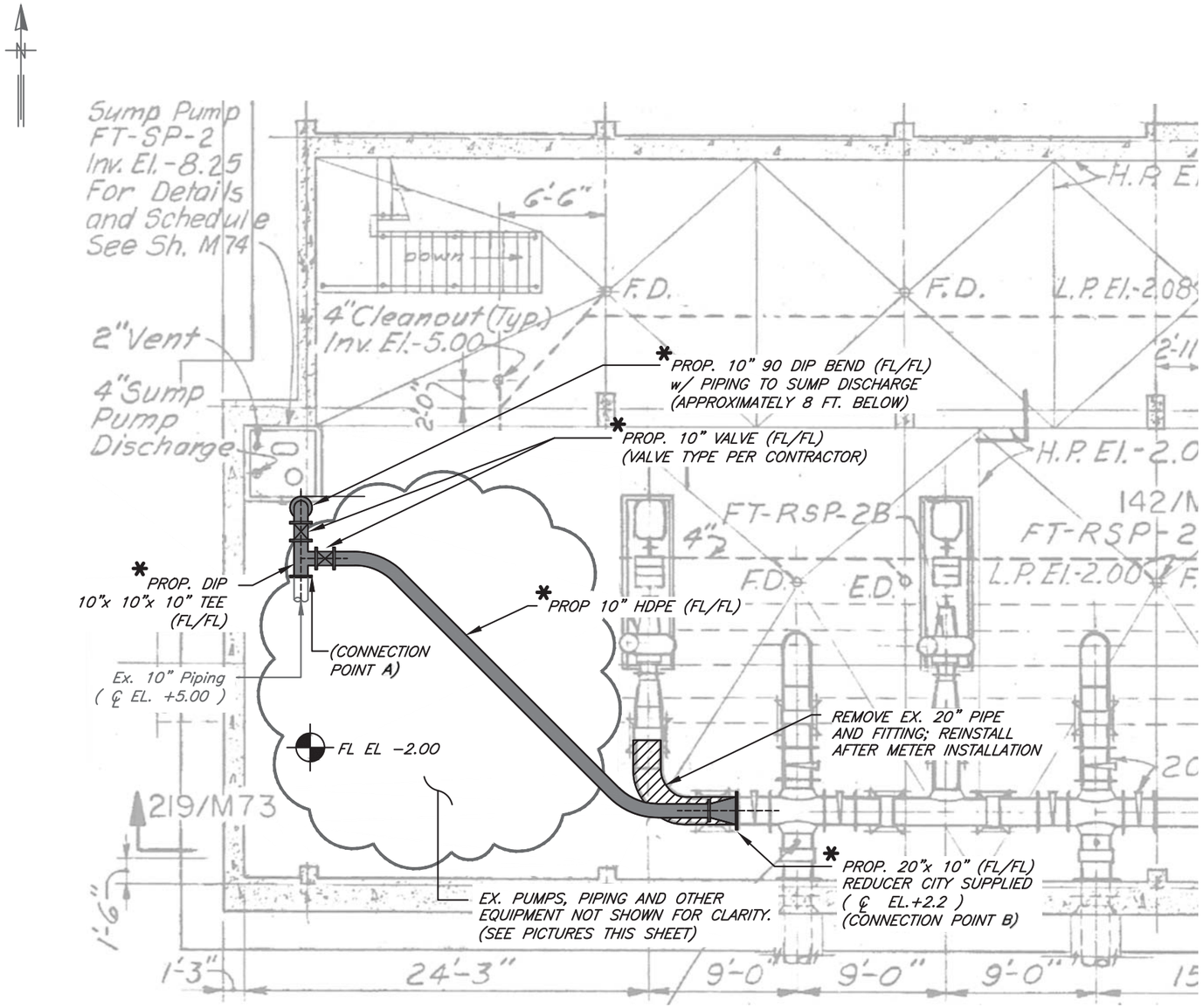

PLAN
1/8" = 1'-0"

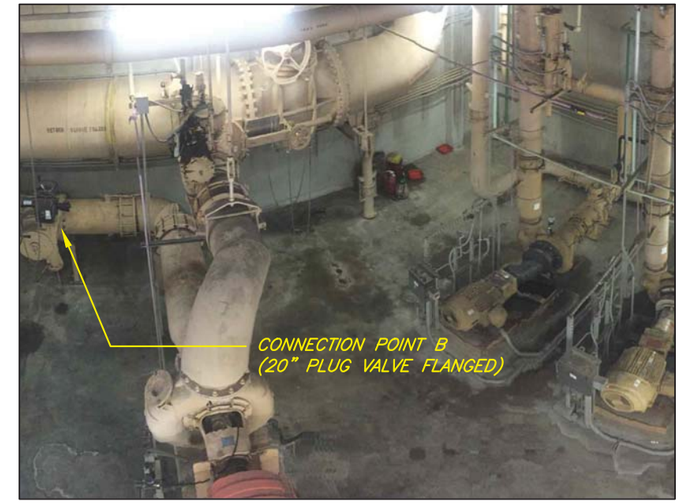

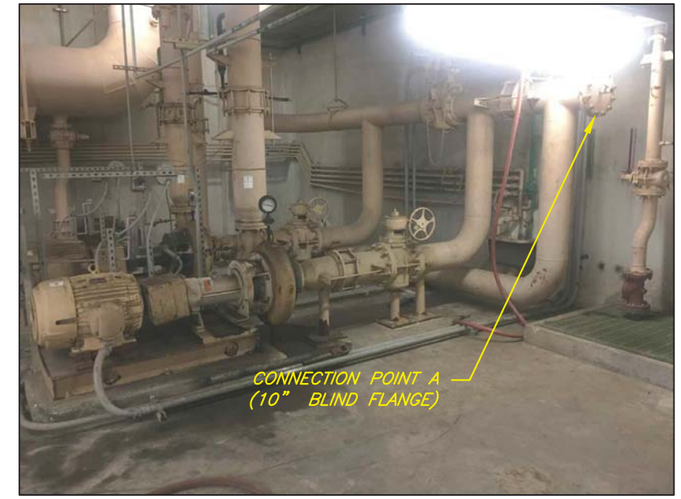

SHADED AREAS ON THIS SHEET INDICATE PIPING AND EQUIPMENT TO BE INSTALLED

* ALL PROPOSED PIPE, VALVES AND FITTINGS SHOWN ON THIS SHEET ARE TEMPORARY TO FACILITATE DRAWING AND BYPASSING EXISTING PIPES TO INSTALL NEW FLOW METER. CONTRACTOR WILL BE REQUIRED TO REMOVE TEMPORARY ITEMS AFTER FLOW METER IS INSTALLED AND WORKING. THE CITY WILL NOT TAKE OWNERSHIP OF THE TEMPORARY ITEMS PROVIDED BY THE CONTRACTOR.

JACINTO CARLOS FERRAS, PE #49454
DESIGN DIVISION HEAD
WASTEWATER DEPARTMENT

No.	DATE	REVISIONS
3		
2		
1	12/18/19	ADDENDUM: ADDED NEW SHEET

DES: MS
DRN: JHJ
CKD:
DATE: 12/18/19

CITY of TAMPA
WASTEWATER DEPARTMENT

HFCAWTP JUNCTION CHAMBER 2
SLUICE GATE REPLACEMENT
TEMPORARY BYPASS PLAN

SHEET
11C

User: ss13 Drawing Name: K:\WasteWater Projects\HFC ATWP Junction Chamber No.2 Sluice Gate Replacement\Drafting\DWG\HFCAWTP Junction Chamber 2 Sluice Gate Replacement 18-C-000024.dwg
Layout- Dec 23, 2019 - 11:10am

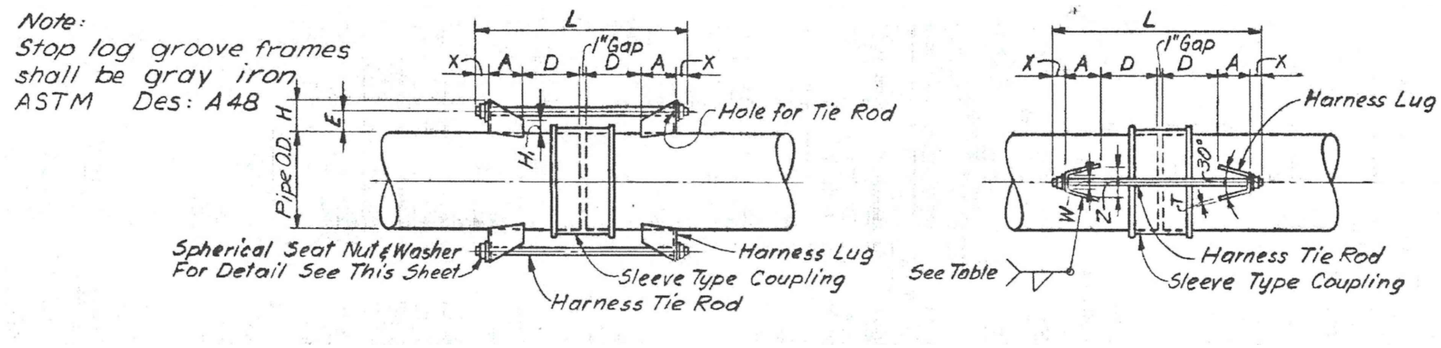

TYPE A HARNESSED SLEEVE TYPE COUPLING JOINT FOR STEEL PIPE – SCHEDULE																			
NORMAL PIPE SIZE	WALL THICK-NESS	O. D. OF PIPE	MAX PRESS. FOR HARNESS TIE ROD P.S.I.	MIDDLE RING		HARNESS TIE ROD				HARNESS LUG MINIMUM DIMENSION									
				LENGTH	THICKNESS	NO.	DIA.	X	L	A	W	Z	T	E	H	H_1	D	HOLE	WELD
20"	0.375	20.00	25	7	⅜	2	⅝	1⅛	26¼	3	1½	2⅞	⅜	3	3⅞	2	8⅛	¾	¼

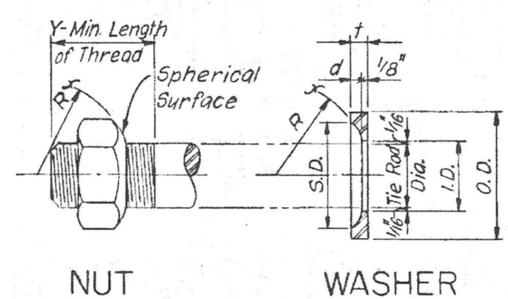

HARNESS TIE ROD SPHERICAL NUT AND WASHER								
Tie Rod Dia.	Thad/In.	ID	OD	SD	R	d	t	Y Min. Thread Length
⅝	11	¾	1½	1⅜	1 1/16	3 1/16	5/16	1⅛

	No.	DATE	REVISIONS
JACINTO CARLOS FERRAS, P.E. #49454 DESIGN DIVISION HEAD WASTEWATER DEPARTMENT	3		
	2		
	1	12/18/19	ADDENDUM: ADDED NEW SHEET

DES: MS
DRN: JHJ
CKD:
DATE: 12/18/19

CITY of TAMPA
WASTEWATER DEPARTMENT

HFCAWTP JUNCTION CHAMBER 2
SLUICE GATE REPLACEMENT
HARNESS COUPLING DETAIL

SHEET
16A

User: a13 Drawing Name: K:\WastewaterProjects\HFC ATWP Junction Chamber No.2 Sluice Gate Replacement\Drafting\DWG\HFCAWTP Junction Chamber 2 Sluice Gate Replacement 18-C-000024.dwg
Layout- Dec 23, 2019 - 11:44am

GENERAL NOTES

THE WORK CONSIST OF FURNISHING ALL LABOR, MATERIALS, EQUIPMENT, AND TECHNICAL SUPERVISION TO INSTALL THE NEW MOTOR OPERATED VALVES, FLOW METER REMOTE TRANSMITTERS AND CIRCUIT BREAKERS AS INDICATED AND SHOWN. THE WORK INCLUDES, BUT IS NOT LIMITED TO, THE FOLLOWING:

1. CONTRACTOR SHALL SUBMIT SHOP DRAWINGS FOR APPROVAL PRIOR TO PURCHASING EQUIPMENT OR COMMENCING CONSTRUCTION.
2. ALL WIRING SHALL BE IDENTIFIED WITH NUMBERS AT ALL TERMINALS AND ON WIRING DIAGRAMS.
3. FIELD VERIFY ALL EQUIPMENT LOCATIONS AND CONNECTIONS PRIOR TO COMMENCING CONSTRUCTION.
4. ALL NEW EQUIPMENT SHALL BE PERMANENTLY IDENTIFIED WITH A BLACK ON WHITE LAMACOID TAG ENGRAVED WITH MINIMUM 3/16 INCH LETTERING.
5. ALL CONDUCTOR LENGTHS SHALL BE CONTINUOUS. NO SPLICES OR CONDUCTOR TERMINATIONS SHALL BE PERMITTED UNLESS SPECIFICALLY DESIGNATED IN THE DRAWINGS.
6. ALL EXISTING INSTALLATIONS DENOTED ON THE DRAWINGS ARE FOR THE CONTRACTORS REFERENCE ONLY. ALL EXISTING INSTALLATIONS SHALL BE FIELD VERIFIED PRIOR TO SUBMITTING A BID AND PRIOR TO COMMENCING CONSTRUCTION.
7. ALL ELECTRICAL WORK SHALL BE PERFORMED IN ACCORDANCE WITH THE FLORIDA BUILDING CODE 6TH EDITION 2017, THE NATIONAL FIRE PROTECTION ASSOCIATION (NFPA) SERIES 70/NATIONAL ELECTRICAL CODE (NEC) 2014 EDITION AND CHAPTER 5 OF THE CITY OF TAMPA CODE. 1
8. TEST AND START–UP REPORTS FOR THE PROPOSED MOTOR OPERATED VALVES AND FLOW METER REMOTE TRANSMITTERS SHALL BE INCLUDED IN THE OPERATION AND MAINTENANCE (O&M) MANUALS PROVIDED UNDER THIS CONTRACT. ALL CIRCUIT BREAKER SETTINGS SHALL BE TABULATED AND INCLUDED IN THE O&M MANUAL.

SCOPE OF WORK

THE WORK CONSISTS OF FURNISHING ALL LABOR, MATERIALS, EQUIPMENT, TRANSPORTATION, AND PERFORMING ALL OPERATIONS REQUIRED TO SUPPORT THE INSTALLATION AND COMMISSIONING OF THE ELECTRICAL PORTION OF THE HFC AWTP SLUICE GATE AND FLOW METER REPLACEMENT. THE WORK INCLUDES, BUT IS NOT LIMITED TO, THE FOLLOWING:

1. SUBMIT WORKING DRAWINGS, PARTS SCHEDULES AND CUT–SHEETS TO THE ENGINEER.
2. FURNISH AND INSTALL ALL EQUIPMENT AS SHOWN ON THE PLANS AND DESCRIBED IN THE SPECIFICATIONS.

SPECIFICALLY:

A. <u>INSTALLATION</u>

1. PRIOR TO DEMOLITION, THE PROPOSED MOTOR OPERATED VALVE ACTUATORS AND FLOW METER REMOTE TRANSMITTERS SHALL BE ON SITE AND READY FOR INSTALLATION. NO TEMPORARY POWER SHALL BE REQUIRED DURING THE REPLACEMENT OF THE EQUIPMENT.
2. VERIFY EXISTING CONTROL AND POWER CONNECTIONS IN THE FIELD PRIOR TO COMMENCING DEMOLITION WORK.
3. REMOVE THE EXISTING MOTOR OPERATED VALVE ACTUATORS AND FLOW METER REMOTE TRANSMITTERS. PREPARE THE EXISTING SPACES AS REQUIRED TO INSTALL THE NEW THE EQUIPMENT.
4. INSTALL THE MOTOR OPERATED VALVE ACTUATORS AND FLOW METER REMOTE TRANSMITTERS.
5. INSTALL NEW CONDUIT, CONDUCTORS, JUNCTION BOXES, CHANNEL SUPPORTS AND CIRCUIT BREAKERS AS SHOWN, INDICATED OR REQUIRED.
6. MAKE CABLE CONNECTIONS AS SHOWN.

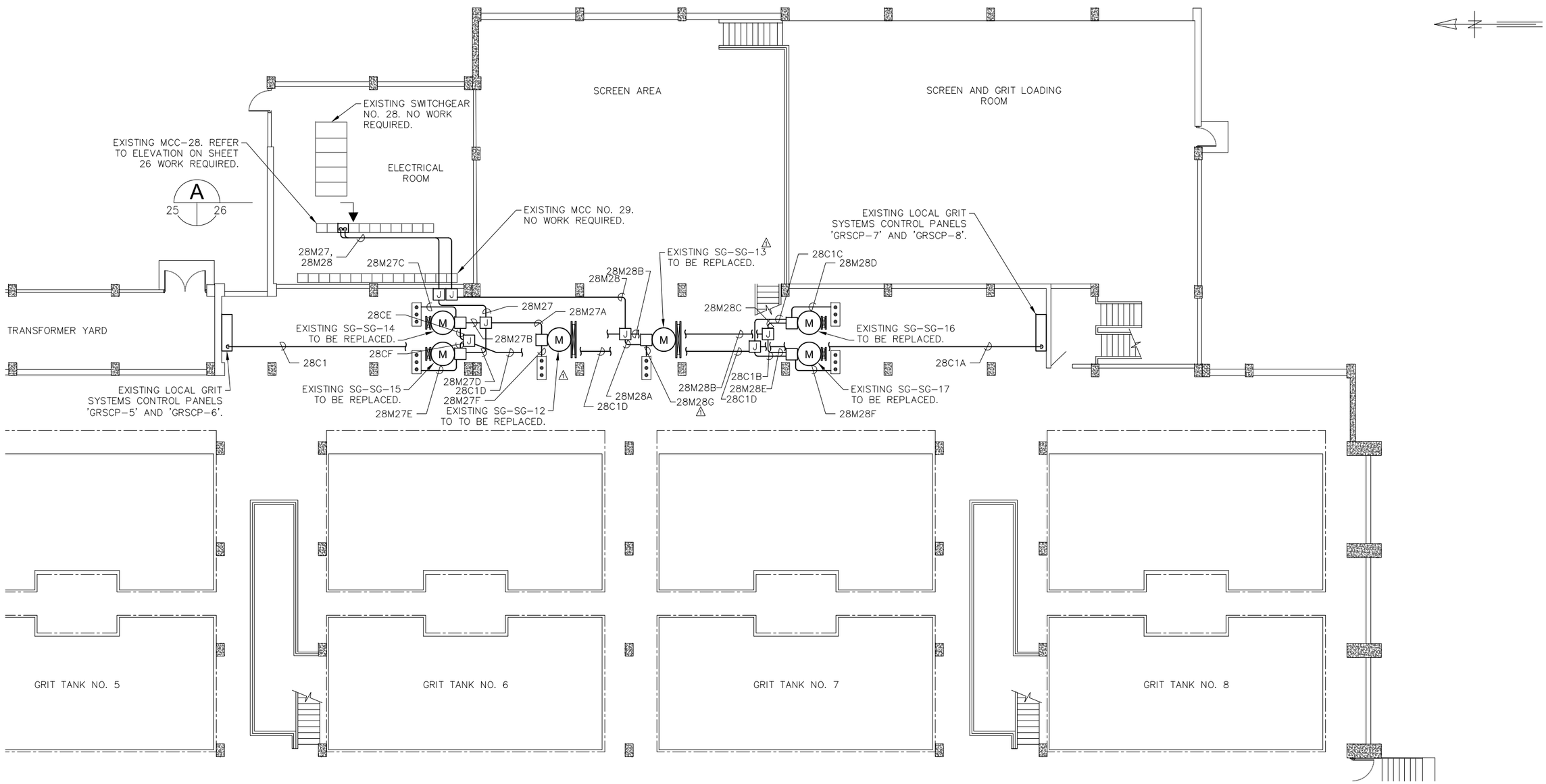

SCREEN AND GRIT BUILDING NO.1 (059) : PLAN ELEVATION 15'-6"

1
18 25

SCALE : 1/16" = 1'-0"

JOB No.	231900542					
DESIGNED	TDT					
DRAWN	JLH					
CHECKED	TDT	1	12/10/19	TDT		ADDENDUM: MISC REVISIONS
DATE	8/2019	No.	DATE	BY	APP	REVISION DESCRIPTION

TRICON CONSULTING ENGINEERS
777 S. Harbour Island Blvd, Suite 350
Tampa, FL 33602
813.227.9190
Certificate of Authorization No. 8363

SCALE: AS SHOWN

City of Tampa Wastewater Department
HOWARD F. CURREN AWTP
SLUICE GATE AND FLOW METER REPLACEMENT

SCREEN & GRIT BUILDING NO. 1 PROPOSED ELECTRICAL PLAN ELEVATION 15'-6"

TIMOTHY THOMAS, P.E. No. 47079

SHEET NUMBER 25

FILE: 231900542E01

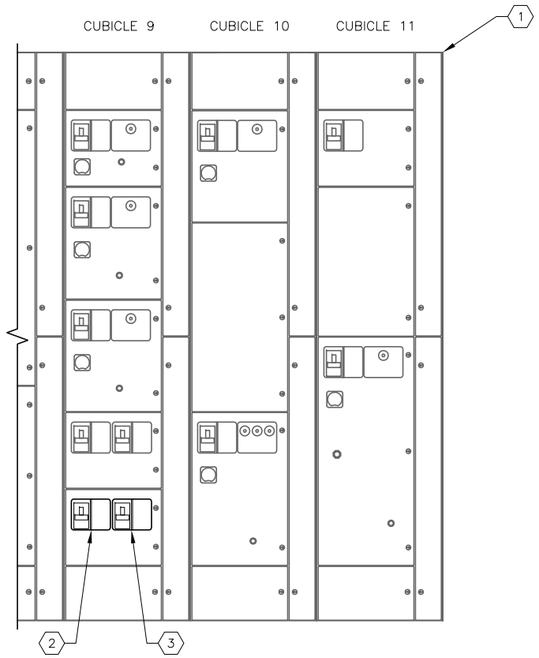

EXISTING MCC-28
PARTIAL FRONT ELEVATION (A 25/26)

SCALE: NOT TO SCALE

KEYED NOTES:

1. EXISTING SCREEN AND GRIT BUILDING NO. 1, MCC-28.
2. EXISTING 480V, 3-POLE, 20A CIRCUIT BREAKER FOR SG-SG-12, SG-SG-14 AND SG-SG-15. CIRCUIT BREAKER TO REMAIN NO WORK REQUIRED. △1
3. EXISTING 480V, 3-POLE, 20A CIRCUIT BREAKER FOR SG-SG-13, SG-SG-16 AND SG-SG-17. CIRCUIT BREAKER TO REMAIN NO WORK REQUIRED. △1

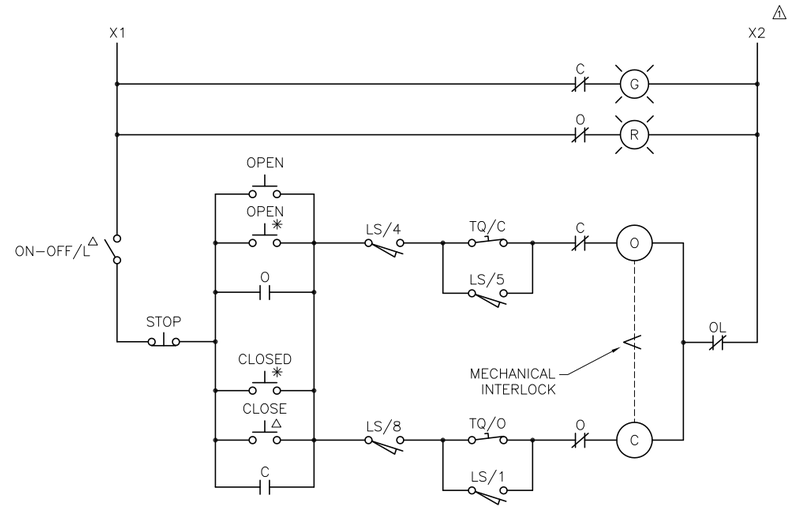

SLUICE GATE WIRING DIAGRAM
(TYPICAL FOR SG-SG-12 AND SG-SG-13)

TYPICAL LIMIT SWITCH CONTACT DEVELOPMENT FOR MOTORIZED SLUICE GATE OPERATIONS					
ROTOR NO.	CONTACT NO.	OPERATOR POSITION			CONTACT FUNCTION
		FULL OPEN	INTER-MEDIATE	FULL CLOSED	
1	1	X	— — —	— — —	BYPASS CIRCUIT
	2	X	— — —	— — —	AUXILIARY
	3	— — —	X	X	AUXILIARY
	4	— — —	X	X	FORWARD (OPEN LIMIT)
2	5	— — —	— — —	X	BYPASS CIRCUIT
	6	— — —	— — —	X	AUXILIARY
	7	X	X	— — —	AUXILIARY
	8	X	X	— — —	OPEN INDICATION LIGHT *
3	9	X	X	— — —	OPEN INDICATION LIGHT **
	10	X	X	— — —	REVERSE (CLOSED) LIMIT
	11	— — —	— — —	X	AUXILIARY
	12	— — —	— — —	X	AUXILIARY
4	13	— — —	X	X	CLOSED INDICATION LIGHT *
	14	— — —	X	X	CLOSED INDICATION LIGHT **
	15	X	— — —	— — —	AUXILIARY
	16	X	— — —	— — —	AUXILIARY

TQ/C – CLOSING TORQUE SWITCH
TQ/O – OPENING TORQUE SWITCH
X INDICATES CONTACT CLOSED
— — — INDICATES CONTACT OPEN

* INDICATING LIGHT IN GRSCP-5, 6
** INDICATING LIGHT IN GRSCP-7, 8

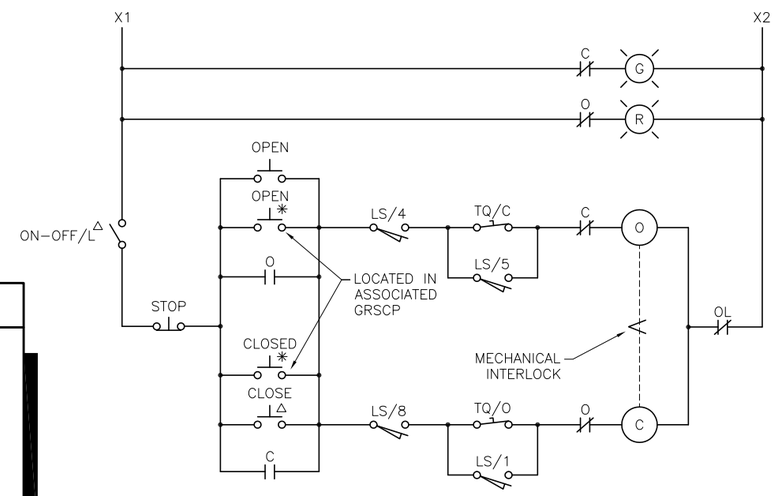

SLUICE GATE WIRING DIAGRAM
(TYPICAL FOR SG-SG-14 THRU SG-SG-17)

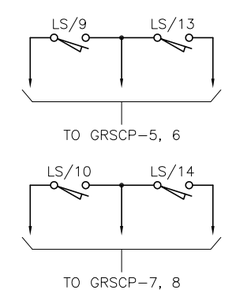

TRICON CONSULTING ENGINEERS
777 S. Harbour Island Blvd,
Suite 350
Tampa, FL 33602
813.227.9190
Certificate of Authorization No. 8363

JOB No.	231900542					
DESIGNED	TDT					
DRAWN	JLH					
CHECKED	TDT	△1	12/10/19	TDT		ADDENDUM: MISC REVISIONS
DATE	8/2019	No.	DATE	BY	APP	REVISION DESCRIPTION

SCALE: AS SHOWN

City of Tampa Wastewater Department
HOWARD F. CURREN AWTP
SLUICE GATE AND FLOW METER REPLACEMENT

EXISTING MCC-28 ELEVATION AND DETAILS

TIMOTHY THOMAS, P.E. No. 47079

SHEET NUMBER 26

FILE: 231900542E01

CONDUIT AND CABLE SCHEDULE

CONDUIT No.	SIZE	NUMBER OF CONDUCTORS/SIZE	FROM	TO	REMARKS
28M27	3/4"	3-#12 + 1-#12 GND △1	MCC 28	J.B. NEAR SG-SG-14	3/4" CONDUIT IS EXISTING TO BE REUSED AFTER CLEANING, PROVIDE NEW CONDUCTORS.
28M27A	3/4"	3-#12 + 1-#12 GND △1	J.B. NEAR SG-SG-14	SG-SG-12	3/4" CONDUIT IS EXISTING TO BE REUSED AFTER CLEANING, PROVIDE NEW CONDUCTORS. PROVIDE NEW EYS SEALS AND NEW SS EXPLOSIONPROOF FLEXIBLE CONDUIT.
28M27B	3/4"	3-#12 + 1-#12 GND △1	J.B. NEAR SG-SG-14	SG-SG-14	3/4" CONDUIT IS EXISTING TO BE REUSED AFTER CLEANING, PROVIDE NEW CONDUCTORS. PROVIDE NEW EYS SEALS AND NEW SS EXPLOSIONPROOF FLEXIBLE CONDUIT.
28M27C	3/4"	6-#14 + 1-#14 GND △1	SG-SG-14	LOCAL CONTROL STATION	3/4" CONDUIT IS EXISTING TO BE REUSED AFTER CLEANING, PROVIDE NEW CONDUCTORS. PROVIDE NEW EYS SEALS AND NEW SS EXPLOSIONPROOF FLEXIBLE CONDUIT.
28M27D	3/4"	3-#12 + 1-#12 GND △1	J.B. NEAR SG-SG-14	SG-SG-15	3/4" CONDUIT IS EXISTING TO BE REUSED AFTER CLEANING, PROVIDE NEW CONDUCTORS. PROVIDE NEW EYS SEALS AND NEW SS EXPLOSIONPROOF FLEXIBLE CONDUIT.
28M27E	3/4"	6-#14 + 1-#14 GND △1	SG-SG-14	LOCAL CONTROL STATION	3/4" CONDUIT IS EXISTING TO BE REUSED AFTER CLEANING, PROVIDE NEW CONDUCTORS. PROVIDE NEW EYS SEALS AND NEW SS EXPLOSIONPROOF FLEXIBLE CONDUIT.
△1 28M27F	3/4"	6-#14 + 1-#14 GND	SG-SG-12	LOCAL CONTROL STATION	3/4" CONDUIT IS EXISTING TO BE REUSED AFTER CLEANING, PROVIDE NEW CONDUCTORS. PROVIDE NEW EYS SEALS AND NEW SS EXPLOSIONPROOF FLEXIBLE CONDUIT.
28M28	3/4"	3-#12 + 1-#12 GND △1	MCC 28	J.B. NEAR SG-SG-13	3/4" CONDUIT IS EXISTING TO BE REUSED AFTER CLEANING, PROVIDE NEW CONDUCTORS.
28M28A	3/4"	3-#12 + 1-#12 GND △1	J.B. NEAR SG-SG-13	SG-SG-13	3/4" CONDUIT IS EXISTING TO BE REUSED AFTER CLEANING, PROVIDE NEW CONDUCTORS. PROVIDE NEW EYS SEALS AND NEW SS EXPLOSIONPROOF FLEXIBLE CONDUIT.
28M28B	3/4"	3-#12 + 1-#12 GND △1	J.B. NEAR SG-SG-13	J.B. NEAR SG-SG-16	3/4" CONDUIT IS EXISTING TO BE REUSED AFTER CLEANING, PROVIDE NEW CONDUCTORS.
28M28C	3/4"	3-#12 + 1-#12 GND △1	J.B. NEAR SG-SG-16	SG-SG-16	3/4" CONDUIT IS EXISTING TO BE REUSED AFTER CLEANING, PROVIDE NEW CONDUCTORS. PROVIDE NEW EYS SEALS AND NEW SS EXPLOSIONPROOF FLEXIBLE CONDUIT.
28M28D	3/4"	6-#14 + 1-#14 GND △1	SG-SG-16	LOCAL CONTROL STATION	3/4" CONDUIT IS EXISTING TO BE REUSED AFTER CLEANING, PROVIDE NEW CONDUCTORS. PROVIDE NEW EYS SEALS AND NEW SS EXPLOSIONPROOF FLEXIBLE CONDUIT.
28M28E	3/4"	3-#12 + 1-#12 GND △1	J.B. NEAR SG-SG-16	SG-SG-17	3/4" CONDUIT IS EXISTING TO BE REUSED AFTER CLEANING, PROVIDE NEW CONDUCTORS. PROVIDE NEW EYS SEALS AND NEW SS EXPLOSIONPROOF FLEXIBLE CONDUIT.
28M28F	3/4"	6-#14 + 1-#14 GND	SG-SG-17	LOCAL CONTROL STATION	3/4" CONDUIT IS EXISTING TO BE REUSED AFTER CLEANING, PROVIDE NEW CONDUCTORS. PROVIDE NEW EYS SEALS AND NEW SS EXPLOSIONPROOF FLEXIBLE CONDUIT.
△1 28M28G	3/4"	6-#14 + 1-#14 GND	SG-SG-13	LOCAL CONTROL STATION	3/4" CONDUIT IS EXISTING TO BE REUSED AFTER CLEANING, PROVIDE NEW CONDUCTORS. PROVIDE NEW EYS SEALS AND NEW SS EXPLOSIONPROOF FLEXIBLE CONDUIT.
28C1	1-1/4"	18-#14 + 1-#14 GND	GRSCP-5, 6	J.B. NEAR SG-SG-14	NO WORK REQUIRED.
28C1A	1-1/4"	18-#14 + 1-#14 GND	GRSCP-7, 8	J.B. NEAR SG-SG-17	NO WORK REQUIRED.
28C1B	1"	9-#14 + 1-#14 GND	J.B. NEAR SG-SG-17	SG-SG-17	1" CONDUIT IS EXISTING TO BE REUSED AFTER CLEANING, PROVIDE NEW CONDUCTORS. PROVIDE NEW EYS SEALS AND NEW SS EXPLOSIONPROOF FLEXIBLE CONDUIT.
28C1C	1"	9-#14 + 1-#14 GND	J.B. NEAR SG-SG-17	SG-SG-16	1" CONDUIT IS EXISTING TO BE REUSED AFTER CLEANING, PROVIDE NEW CONDUCTORS. PROVIDE NEW EYS SEALS AND NEW SS EXPLOSIONPROOF FLEXIBLE CONDUIT.
28C1D	1-1/4"	18-#14 + 1-#14 GND	J.B. NEAR SG-SG-17	J.B. NEAR SG-SG-14	NO WORK REQUIRED.
28C1E	1"	9-#14 + 1-#14 GND	J.B. NEAR SG-SG-14	SG-SG-14	1" CONDUIT IS EXISTING TO BE REUSED AFTER CLEANING, PROVIDE NEW CONDUCTORS. PROVIDE NEW EYS SEALS AND NEW SS EXPLOSIONPROOF FLEXIBLE CONDUIT.
28C1F	1"	9-#14 + 1-#14 GND	J.B. NEAR SG-SG-14	SG-SG-15	1" CONDUIT IS EXISTING TO BE REUSED AFTER CLEANING, PROVIDE NEW CONDUCTORS. PROVIDE NEW EYS SEALS AND NEW SS EXPLOSIONPROOF FLEXIBLE CONDUIT.

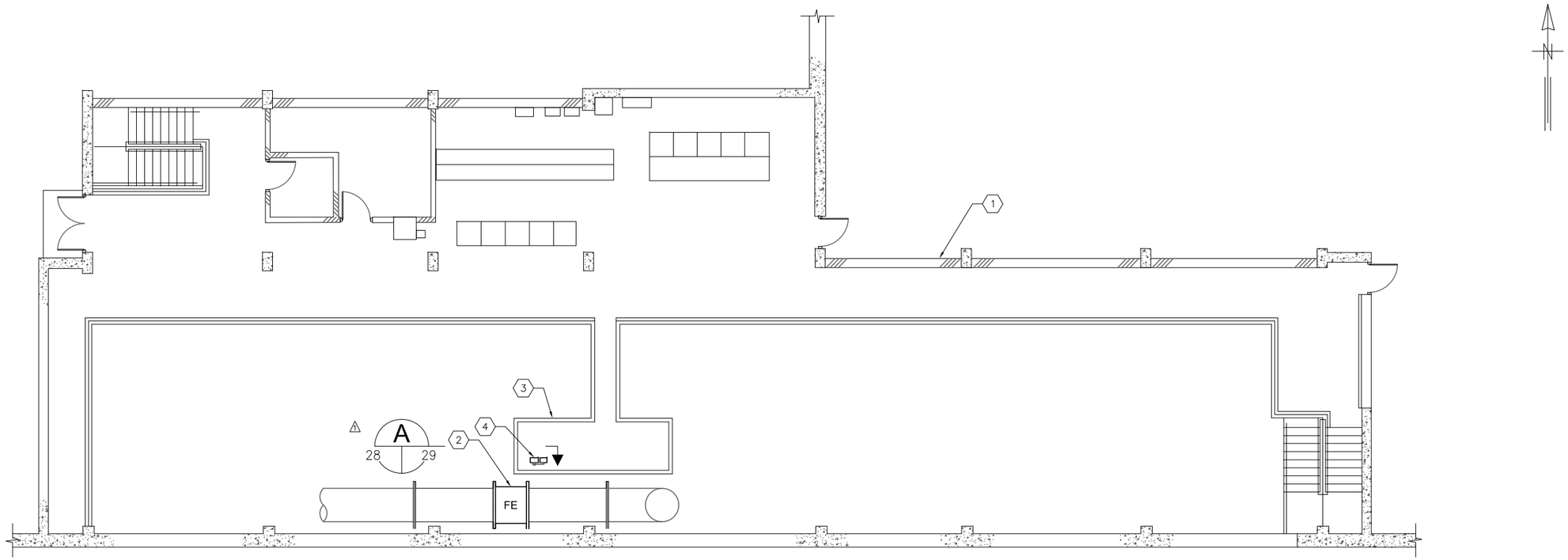

SLUDGE PUMPING STATION NO.2 (023) : PLAN ELEVATION 11'-0"

1
18 28

SCALE : 1/16" = 1'-0"

KEYED NOTES:

1. EXISTING SLUDGE PUMPING STATION NO. 2.
2. NEW 42" FLOW METER TO BE PROVIDED AND INSTALLED BY CONTRACTOR. REFER TO DETAILS ON SHEET 40.
3. EXISTING PLATFORM AT ELEVATION 11'-0".
4. CONTRACTOR TO REMOVE EXISTING MS-2 FLOW METER TRANSMITTER. REFER TO SHEET 29 FOR DETAILS. PROVIDE AND INSTALL PROPOSED MS-2 TRANSMITTER AS SHOWN ON SHEET 29.

TRICON CONSULTING ENGINEERS
777 S. Harbour Island Blvd,
Suite 350
Tampa, FL 33602
813.227.9190
Certificate of Authorization No. 8363

JOB No.	231900542					
DESIGNED	TDT					
DRAWN	JLH					
CHECKED	TDT	1	12/10/19	TDT		ADDENDUM: MISC REVISIONS
DATE	8/2019	No.	DATE	BY	APP	REVISION DESCRIPTION

SCALE: AS SHOWN

City of Tampa Wastewater Department

HOWARD F. CURREN AWTP
SLUICE GATE AND FLOW METER
REPLACEMENT

SLUDGE PUMP BUILDING NO. 2
PROPOSED ELECTRICAL PLAN
ELEVATION 11'-0"

TIMOTHY THOMAS, P.E. No. 47079

SHEET NUMBER 28

FILE: 231900542E01

EXISTING REMOTE TRANSMITTER DETAILS (A 28/29)

SCALE: NOT TO SCALE

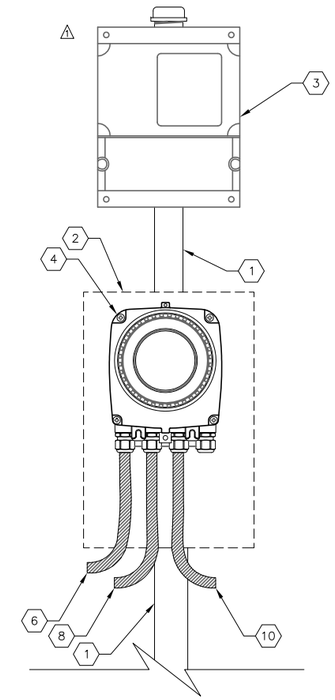

NEW REMOTE TRANSMITTER INSTALLATION DETAILS (A 28/29)

SCALE: NOT TO SCALE

GENERAL NOTES:

1. REFER TO SHEET 40 FOR TYPICAL REMOTE TRANSMITTER FIELD WIRING SCHEMATIC.
2. NEW CONDUCTORS FOR FLOW METER REMOTE TRANSMITTER SHALL BE SPLICED TO EXISTING CONDUCTORS WITH IDEAL PUSH-IN WIRE CONNECTORS, PART #30-1632.

KEYED NOTES:

1. CONTRACTOR SHALL REUSE EXISTING PIPE PEDESTAL.
2. CONTRACTOR REMOVE EXISTING MS-2 FLOW METER TRANSMITTER AND PROVIDE AND INSTALL NEW ABB WATER MASTER REMOTE TRANSMITTER.
3. EXISTING ELECTRONICS FOR MRC-2 TO REMAIN.
4. CONTRACTOR TO PROVIDE AND INSTALL ABB WATER MASTER REMOTE TRANSMITTER. MOUNT REMOTE TRANSMITTER TO EXISTING PIPE PEDESTAL WITH STAINLESS STEEL U-BOLTS AND CLAMPS.
5. EXISTING CONDUIT CONTAINING CONDUCTORS FOR 120V AC POWER. EXISTING CONDUIT AND CONDUCTORS FOR 120V AC POWER TO BE REPLACED. PROVIDE AND INSTALL 2-#12 + 1-#12 GND IN 3/4" LIQUID-TIGHT, NON-METALLIC, FLEXIBLE CONDUIT FROM REMOTE TRANSMITTER TO EXISTING JUNCTION BOX ADJACENT TO PIPE PEDESTAL. SPLICE INTO EXISTING 120V AC CIRCUIT WITH NEW WIRE NUTS.
6. PROVIDE AND INSTALL 2-#12 + 1-#12 GND IN 3/4" LIQUID-TIGHT, NON-METALLIC, FLEXIBLE CONDUIT FROM REMOTE TRANSMITTER TO EXISTING JUNCTION BOX ADJACENT TO PIPE PEDESTAL. SPLICE INTO EXISTING 120V AC CIRCUIT WITH NEW WIRE NUTS.
7. EXISTING CONDUIT AND CONDUCTORS FOR REMOTE TRANSMITTER ANALOG OUTPUT TO BE REPLACED. PROVIDE AND INSTALL 2/C-#18 TWISTED SHIELDED IN 3/4" LIQUID-TIGHT, NON-METALLIC, FLEXIBLE CONDUIT FROM REMOTE TRANSMITTER TO EXISTING JUNCTION BOX ADJACENT TO PIPE PEDESTAL. SPLICE INTO EXISTING CONDUCTORS WITH NEW IDEAL PUSH-IN WIRE CONNECTORS. PART #30-1632. TOTAL OF THREE (3) REQUIRED.
8. PROVIDE AND INSTALL 2/C-#18 TWISTED SHIELDED IN 3/4" LIQUID-TIGHT, NON-METALLIC, FLEXIBLE CONDUIT FROM REMOTE TRANSMITTER TO EXISTING JUNCTION BOX ADJACENT TO PIPE PEDESTAL. SPLICE INTO EXISTING CONDUCTORS WITH NEW IDEAL PUSH-IN WIRE CONNECTORS. PART #30-1632. TOTAL OF THREE (3) REQUIRED.
9. EXISTING CONDUIT/CONDUCTORS TO EXISTING FLOW ELEMENT TO BE REMOVED.
10. PROVIDE AND INSTALL 3/4" LIQUID-TIGHT, NON-METALLIC, FLEXIBLE CONDUIT FOR MANUFACTURER SUPPLIED SENSOR CABLE. ALL SLACK SENSOR CABLE SHALL BE LOOPED AT FLOW METER ELEMENT AND SECURED WITH NYLON TIE-WRAPS.

TRICON CONSULTING ENGINEERS
777 S. Harbour Island Blvd, Suite 350
Tampa, FL 33602
813.227.9190
Certificate of Authorization No. 8363

JOB No.	231900542					
DESIGNED	TDT					
DRAWN	JLH					
CHECKED	TDT	1	12/10/19	TDT		ADDENDUM: MISC REVISIONS
DATE	8/2019	No.	DATE	BY	APP	REVISION DESCRIPTION

SCALE: AS SHOWN

City of Tampa Wastewater Department
HOWARD F. CURREN AWTP
SLUICE GATE AND FLOW METER REPLACEMENT

SLUDGE PUMP BUILDING NO. 2 REMOTE FLOW TRANSMITTER DETAILS

TIMOTHY THOMAS, P.E. No. 47079

SHEET NUMBER 29

FILE: 231900542E01