The Enclosed Document Is Provided For Your Convenience.

Please Email ALL Questions:

MailTo:ContractAdministration@TampaGov.net

Please Let Us Know If You Plan To Bid

City of Tampa
Contract Administration Department
306 E. Jackson St. #280A4N
Tampa, FL 33602
(813)274-8456

CITY OF
TAMPA, FLORIDA

NOTICE TO BIDDERS, INSTRUCTIONS TO BIDDERS
PROPOSAL, BID BOND, FORM OF NOTICE OF AWARD,
AGREEMENT, PERFORMANCE BOND AND
SPECIFICATIONS

FOR

Contract 13-C-00043

HOWARD F. CURREN AWTP OLD PRIMARY SLUDGE PUMPING STATION MOTOR CONTROL CENTER REPLACEMENT

City of Tampa
CONTRACT ADMINISTRATION DEPARTMENT
TAMPA MUNICIPAL OFFICE BUILDING
306 E. JACKSON STREET - 4TH FLOOR NORTH
TAMPA, FLORIDA 33602

JULY 2015

CITY OF TAMPA
CONTRACT ADMINISTRATION DEPARTMENT
306 E. Jackson Street 280A4N
Tampa, FL 33602

****

BID NOTICE MEMO
****

Bids will be received no later than 1:30 p.m. on the indicated Date(s) for the following Project(s):
****

CONTRACT NO.: 13-C-00043; Howard F. Curren AWTP Primary Sludge Pumping Station Motor Control Center Replacement
BID DATE: August 18, 2015 ESTIMATE: $230,000 SCOPE: The project comprises demolition/removal and replacement of the existing HFC AWTP Primary Sludge Motor Control Center, two (2) three-phase transformers, a single phase and three-phase panel board, lighting fixtures with all associated work required for a complete project in accordance with the Contract Documents.
PRE-BID CONFERENCE: Tuesday, August 4, 2015, 10:00a.m., AWTP Maintenance Building Training Room, 2700 Maritime Drive, Tampa, FL 33619. Firms must email names and companies represented for all attendees a minimum of 24 hours in advance to Richard.Birchmire@tampagov.net Mariam.Vliet@tampagov.net and Elaine.Tait@tampagov.net to obtain security clearance. Attendance is not mandatory, but recommended.
****

Bids will be opened in the 4th Floor Conference Room, Tampa Municipal Office Building, 306 E. Jackson Street, Tampa, Florida 33602. Pre-Bid Conference is held at the same location unless otherwise indicated. Plans and Specifications and Addenda for this work may be examined at, and downloaded from, www.demandstar.com. Backup files are available at http://www.tampagov.net/contract-administration/programs/construction-project-bidding. Subcontracting opportunities may exist for City certified Small Local Business Enterprises (SLBEs). A copy of the current SLBE directory may be obtained at www.Tampagov.net. Phone (813) 274-8456 for assistance. Email Technical Questions to: contractadministration@tampagov.net .

TABLE OF CONTENTS

BIDDING REQUIREMENTS

Notice to Bidders....N-1
Instructions to Bidders....I-1a thru I-4
Insurance Requirements....INS-1 thru INS-2
SLBE Goal Setting List....GS-1
Goal Setting List Instructions....GSL-1
Sample Solicitation Letter....SL-1

BID FORMS

Proposal....P-1 thru P-6
Good Faith Efforts Compliance Plan....GFECP
SLBE Solicited....DMI – Solicited
SLBE Utilized....DMI – Utilized
Bid Bond....BB-1

CONTRACT FORMS

Agreement....A-1 thru A-15
Public Construction Bond....PB-1 thru PB-3

GENERAL PROVISIONS

General Provisions....G-1 thru G-10
Specific Provisions....SP-1- thru SP-10
Subcontractors Payment Form....DMI – Payments
Project Sign....Sign-1 thru Sign-2

SPECIFICATION

TECHNICAL

Section 16050 – Electrical – General Provisions....16050-1 thru 16050-5
Section 16060 – Grounding....16060-1 thru 16060-4
Section 16075 – Electrical Identification....16075-1 thru 16075-3
Section 16080 – Electrical Testing Requirements....16080-1 thru 16080-2
Section 16110 – Conduit, Wire and Grounding....16110-1 thru 16110-9
Section 16140 – Wiring Devices....16140-1 thru 16140-3
Section 16421 – Lighting Control Cabinet....16421-1 thru 16421-3
Section 16433 – Panelboards....16433-1 thru 16433-4
Section 16445 – Motor Control Center....16445-1 thru 16445-10
Section 16460 – General Purpose Dry Type Transformers....16460-1 thru 16460-3
Section 16500 – Lighting Fixtures....16500-1 thru 16500-5

PLANS 26 Sheets of Drawings

NOTICE TO BIDDERS
CITY OF TAMPA, FLORIDA

Contract 13-C-00043; Howard F. Curren AWTP Old Primary Sludge Pumping Station Motor Control Center Replacement

Sealed Proposals will be received by the City of Tampa no later than 1:30 P.M., Aug. 18, 2015, in the 4th Floor Conference Room, Tampa Municipal Office Building, 306 E. Jackson Street, Tampa, Florida, there to be publicly opened and read aloud.

The proposed work is to include, but not be limited to, demolition, removal and replacement of the existing Primary Sludge Motor Control Center, two (2) three-phase transformers, a single phase and three-phase panel board, lighting fixtures, with all associated work required for a complete project in accordance with the Contract Documents.

The Instructions to Bidders, Proposal, Form of Bid Bond, Agreement, Form of Public Construction Bond, Specifications, Plans and other Contract Documents are posted at DemandStar.com. Backup files may be downloaded from http://www.tampagov.net/contract-administration/programs/construction-project-bidding. One set may be available for reference at the office of the Contract Administration Department, Municipal Office Building, Fourth Floor North, City Hall Plaza, Tampa, Florida 33602.

Each Proposal must be submitted on the Proposal form included in the Specifications and must be accompanied by a certified check or cashier's check on a solvent bank or trust company in compliance with Section 255.051, Florida Statutes, made payable to the City of Tampa, in an amount of not less than five per cent of the total bid, or a Bid Bond, of like amount, on the form set forth in the Contract Documents, as a guarantee that, if the Proposal is accepted, the Bidder will execute the Proposed Contract and furnish a Public Construction Bond within twenty (20) days after receipt of Notice of Award of Contract.

The City of Tampa reserves the right to reject any or all Bids and to waive any informalities in the Bid and/or Bid Bond. Acceptance or rejection of Proposals will be made as soon as practicable after the Proposals are received, but the City reserves the right to hold Proposals for ninety (90) days from the date of Opening.

Bid Protest Procedures: Unless subsequently indicated otherwise, in a revised posting on the Department's web page for Construction Project Bidding, the City of Tampa intends to award the referenced project to the lowest bidder listed in the tabulation posted on or about the date of Bid Opening. A bidder aggrieved by this decision may file a protest not later than 4:30 P.M., five (5) business days from the first posting thereof, pursuant to City of Tampa Code Chapter 2, Article V, Division 3, Section 2-282, Procurement Protest Procedures. Protests not conforming therewith shall not be reviewed.

Communication with City Staff

Pursuant to City of Tampa Ordinance 2010-92, during the solicitation period, including any protest and/or appeal, NO CONTACT initiated by bidders or responders with City officers or employees, other than the individuals specified below is permitted:
Director of Contract Administration, David Vaughn
Contracts Management Supervisor, Jim Greiner
Contract Officer, Jody Gray
The City's Legal Department staff
The City's Contract Administration Department staff.
Technical Questions and Requests For Information should be directed to the Department via
ContractAdministration@tampagov.net

"A person or affiliate who has been placed on the convicted vendor list following a conviction for a public entity crime may not submit a bid on a contract to provide any goods or services to a public entity, may not submit a bid on a contract with a public entity for the construction or repair of a public building or public work, may not submit bids on leases of real property to a public entity, may not be awarded or perform work as a contractor, supplier, subcontractor, or consultant under a contract with any public entity, and may not transact business with any public entity in excess of the threshold amount provided in Section 287.017, for CATEGORY TWO for a period of 36 months from the date of being placed on the convicted vendor list." Refer to Section 287.133 Florida Statues.

In accordance with the City of Tampa's Equal Business Opportunity Ordinance, a Goal may have been established for subcontracting with Small Local Business Enterprises, SLBEs, certified by the City. Links to further information and a list of SLBEs are on the Department's Construction Project Bidding Web page. A link to the current complete directory of SLBEs is on the Minority Business Development Office Website.

INSTRUCTIONS TO BIDDERS
SECTION 1 - SPECIAL INSTRUCTIONS

I-1.01 GENERAL:

The proposed work is the Howard F. Curren AWTP Old Primary Sludge Pumping Station Motor Control Center Replacement in the City of Tampa, as required for a complete project, as shown on the plans and detailed in the specifications. The work is located on land owned or controlled by the City of Tampa.

I-1.02 FORM PREPARATION AND PRESENTATION OF PROPOSALS: Replace the second sentence with the following: Submission of the entire specification book is not required.

I-1.03 ADDENDA – Section I-2.03 is replaced with the following: No interpretation of the meaning of the Plans, Specifications, or other Contract Documents will be made to any Bidder orally.

Every request for such interpretation must be in writing, addressed to the City of Tampa, Contract Administration Department, 306 E. Jackson St., 4th Floor, Tampa, Florida 33602 and then emailed to ContractAdministration@tampagov.net. To be given consideration, such request must be received at least seven (7) days prior to the date fixed for the opening of the Proposals. Any and all such interpretations and any supplemental instructions will be in the form of written addenda which, if issued, will be posted on DemandStar.Com and on the Department's web page, with notice given to all prospective bidders at the respective fax numbers or e-mail addresses furnished, for such purposes. Failure of any Bidder to receive any such addenda shall not relieve said Bidder from any obligation under his Proposal as submitted. All addenda so issued shall become part of the Contract Documents.

I-1.04 SIGNATURE OF BIDDERS: Section I-2.07 is replaced with the following:

Proposals must be signed in ink by the Bidder with signature in full. When firm is a Bidder, the Proposal shall be signed in the name of the firm by one or more partners. When a corporation is a bidder the officer signing shall set out the corporate name in full beneath which he shall sign his name and give the title of his office. The Proposal shall also bear the seal of the corporation attested by its secretary.

If the bidder referred to in Section I-2.07 is a corporation, it must submit; upon request, a copy of its filed Articles of Incorporation. In addition, if the bidder was incorporated in another state, it must establish that it is authorized to do business in the State of Florida. If the bidder is using a fictitious name, it must submit upon request, proof of registration of such name with the Clerk of the Circuit Court of the Country where its principal place of business is. Failure to submit what is required is grounds to reject the bid of that bidder.

I-1.05 TIME FOR COMPLETION:

The work shall be arranged to be completed in accordance with a progress schedule approved by the Construction Engineer.

The time for completion of this project, referred in Article 4.01 of the Agreement, shall be 270 consecutive calendar days. The period for performance shall start from the date indicated in the Notice To Proceed.

I-1.06 LIQUIDATED DAMAGES:

The amount of liquidated damages, referred to in Article 4.06 of the Agreement, for completion of this project shall be $500.00 per calendar day.

I-1.07 BASIS OF AWARD OF CONTRACT:

The basis of award referred to in Item I-2.11 of Instructions to Bidders shall be the greatest amount of work, which can be accomplished within the funds available as budgeted. The award may be made on the basis of the total bid, base bid, alternates(s) if any, unit bids if any, or any combination thereof deemed to be in the best interest of the City.

INSTRUCTIONS TO BIDDERS
SECTION 1 - SPECIAL INSTRUCTIONS

Unless all bids are rejected, the award will be made within 90 days after opening proposals.

I-1.08 GROUND BREAKING CEREMONY:

Arrangement may be made by the City in coordination with the Contractor, for construction to commence with a Ground Breaking Ceremony. Details will be discussed at the pre-construction conference.

I-1.09 INSURANCE:

The insurance required for this project shall be as indicated on Pages beginning with INS-1. Before commencing work, the Contractor shall provide the evidence of the insurance required on a Certificate of Insurance accompanied by evidence of authority to bind the insurance company or companies such as agents license, power of attorney, or letter of authority.

I-1.10 EQUAL BUSINESS OPPORTUNITY PROGRAM / SLBE / REQUIREMENTS

In accordance with the City of Tampa's Equal Business Opportunity Program, a goal of 0.0% has been established for subcontracting with Small Local Business Enterprises, (SLBEs), certified by the City. The goal is based upon the availability of the firms listed on the Goal Worksheet and as posted in the "SLBEs" link under this Contract's notice on the Department's Construction Project Bidding web page.

BIDDERS MUST SOLICIT ALL SLBEs ON THAT LIST and provide documentation of emails, faxes, phone calls, letters, or other communication with the firms as a first step to demonstrate Good Faith Efforts to achieve the goal. The list is formatted to facilitate e-mail solicitations to the listed firms by copying and pasting e-mail addresses.

Bidders may explore other opportunities for subcontracting with SLBEs by consulting the current directory of all certified SLBEs posted on the Minority Business Development Office web page.

GOOD FAITH EFFORT COMPLIANCE PLAN REQUIRED - When a Goal has been established, the Bidder must submit, with its bid, completed to the fullest extent possible, a Good Faith Effort Compliance Plan using the form GFECP contained herein. Additional documentation is required whenever an SLBE subcontractor's low quote is not utilized. Supplemental information or documentation concerning the Bidder's Compliance Plan may be required prior to award as requested by the City.

DIVERSITY MANAGEMENT INITIATIVE, DMI, DATA REPORTING FORMS REQUIRED - Bidders must submit, with its bid, "DMI-Solicited" forms listing all subcontractors solicited and "DMI-Utilized" forms listing all subcontractors to be utilized. Supplemental forms, documentation, or information may be submitted at bid time or as requested by the City.

After an award, "DMI-Payments" forms are to be submitted with payment requests to report payments to subcontractors.

Bidders may visit the Minority Business Development Office's web page at TampaGov.net for other information about the SLBE program, FAQ's, and the latest SLBE directory of certified firms.

I-1.11 BID SECURITY:

Surety companies shall have a rating of not less than B+ Class VI as evaluated in the most recently circulated Best Key rating Guide Property-Liability.

INSTRUCTIONS TO BIDDERS
SECTION 1 - SPECIAL INSTRUCTIONS

I-1.12 PUBLIC CONSTRUCTION BOND:

The Bidder who is awarded the Contract will be required to furnish a Public Construction Bond upon the form provided herein, equal to 100 percent of the Contract price, such Bond to be issued and executed by (a) surety company(ies) acceptable to the City of Tampa and licensed to underwrite contracts in the State of Florida. After execution of the Agreement and before commencing work, the Contractor must provide the City a certified copy of the officially recorded Bond.

I-1.13 AGREEMENT
Section 2 – Powers of the City's Representatives
Add the following:
Article 2.05 CITY'S TERMINATION FOR CONVENIENCE:

The City may, at any time, terminate the Contract in whole or in part for the City's convenience and without cause. Termination by the City under this Paragraph shall be by a notice of termination delivered to the Contractor, specify the extent of termination and the effective date.

Upon receipt of a notice of termination, the Contractor shall immediately, in accordance with instructions from the City, proceed with performance of the following duties regardless of delay in determining or adjusting amounts due under this Paragraph:

(a) cease operations as specified in the notice;
(b) place no further orders and enter into no further subcontracts for materials, labor, services or facilities except as necessary to complete continued portions of the Contract;
(c) terminate all subcontracts and orders to the extent they relate to the Work terminated;
(d) proceed to complete the performance of Work not terminated; and
(e) take actions that may be necessary, or that the City may direct, for the protection and preservation of the terminated Work.

The amount to be paid to the Contract by the City because of the termination shall consist of:

(a) for costs related to work performed on the terminated portion of the Work prior to the effective date including termination costs relative to subcontracts that are properly chargeable to the terminated portion of the Work.
(b) the reasonable costs of settlement of the Work terminated, including accounting, legal, clerical and other expenses reasonable necessary for the preparation of termination settlement proposals and supporting data; additional costs of termination and settlement of subcontracts excluding amounts of such settlements; and storage, transportation, and other costs incurred which are reasonably necessary for the preservation, protection or disposition of the terminated Work; and
(c) a fair and reasonable profit on the completed Work unless the Contractor would have sustained a loss on the entire Contract had it been completed.

Allowance shall be made for payments previously made to the Contractor for the terminated portion of the Work, and claims which the City has against the Contractor under the Contract, and for the value of materials supplies, equipment or other items that are part of the costs of the Work to be disposed of by the Contractor.

I-1.14 Section 5 – subcontracts and Assignments, Article 5.01, Page A-7, Last Paragraph:
Change "…twenty-five (25) percent… "<u>to</u> fifty-one (51) percent…"

Section 10-Payments, Article .05 Partial Payments, 1st Paragraph, 1st Sentence:
Change "…fair value of the work done, and may apply for…" <u>to</u> "…fair value of the work done, and shall apply for…"

INSTRUCTIONS TO BIDDERS
SECTION 1 - SPECIAL INSTRUCTIONS

I-1.15 Contractors must utilize the U.S. Department of Homeland Security's E-Verify Systems to verify the employment eligibility of all persons employed during the term of the contract to perform employment duties within the State of Florida and all persons, including subcontractors, assigned by the contractor to perform work pursuant to the contract.

I-1.16 GENERAL PROVISIONS; G-2.02 Copies Furnished to Contractor: Replace the first paragraph with the following:

The Contractor shall acquire for its use copies of the plans and specifications as needed. The documents may be downloaded from the City's web site, at
http://www.tampagov.net/dept_contract_administration/programs_and_services/construction_project_bidding/index.asp

I-1.17 PAYMENT DISPUTE RESOLUTION

Any dispute pertaining to pay requests must be presented to the City pursuant to Executive Order 2003-1.

I-1.18 SCRUTINIZED COMPANIES.

For Contracts $1,000,000 and greater, if the City determines the Contractor submitted a false certification under Section 287.135(5) of the Florida Statutes, or if the Contractor has been placed on the Scrutinized Companies with Activities in the Sudan List or the Scrutinized Companies with Activities in the Iran Petroleum Energy Sector List, the City shall either terminate the Contract after it has given the Contractor notice and an opportunity to demonstrate the City's determination of false certification was in error pursuant to Section 287.135(5)(a) of the Florida Statutes, or maintain the Contract if the conditions of Section 287.135(4) of the Florida Statutes are met.

I-1.19 FLORIDA'S PUBLIC RECORDS LAW

4.33.3 The City of Tampa is a public agency subject to Chapter 119, Florida Statutes. In accordance with Florida Statutes, 119.0701, if applicable, Contractor shall comply with Florida's Public Records Law. Specifically, the Contractor shall:

1. Keep and maintain public records that ordinarily and necessarily would be required by the City in order to perform the service;

2. Provide the public with access to such public records on the same terms and conditions that the City would provide the records and at a cost that does not exceed that provided in Chapter 119, Florida Statutes, or as otherwise provided by law;

3. Ensure that public records that are exempt or that are confidential and exempt from public record requirements are not disclosed except as authorized by law;

4. Meet all requirements for retaining public records and transfer to the City, at no cost, all public records in possession of the contractor upon termination of the contract and destroy any duplicate public records that are exempt or confidential and exempt. All records stored electronically must be provided to the City in a format that is compatible with the information technology systems of the agency.

4.33.4 The failure of Contractor to comply with the provisions set forth in this Article shall constitute a Default and Breach of this award and the City shall enforce the Default in accordance with the provisions set forth in the DEFAULT/RE-AWARD section of this document.

SECTION 2
GENERAL INSTRUCTIONS

I-2.01 BIDDER'S RESPONSIBILITY
Before submitting Proposals, Bidders shall carefully examine the entire site of the proposed work and adjacent premises and the various means of approach and access to the site, and make all necessary investigations to inform themselves thoroughly as to the facilities necessary for delivering, placing and operating the necessary construction equipment, and for delivering and handling materials at the site, and inform themselves thoroughly as to all difficulties involved in the completion of all the work in accordance with the Contract Documents.

Bidders must examine the Plans, Specifications, and other Contract Documents and shall exercise their own judgment as to the nature and amount of the whole of the work to be done, and for the bid prices must assume all risk of variance, by whomsoever made, in any computation or statement of amounts or quantities necessary to complete the work in strict compliance with the Contract Documents.

Elevations of the ground are shown on the Plans and are believed to be reasonably correct, but are not guaranteed to be absolutely so and are presented only as an approximation. Bidders shall satisfy themselves as to the correctness of all elevations.

The City may have acquired, for its own use, certain information relating to the character of materials, earth formations, probable profiles of the ground, conditions below ground, and water surfaces to be encountered at the site of the proposed work. This information, if it exists, is on file at the offices of the Department of Public Works and Bidders will be permitted to see and examine this information for whatever value they consider it worth. However, this information is not guaranteed, and Bidders should satisfy themselves by making borings or test pits, or by such other methods as they may prefer, as to the character, location, and amounts of water, peat, clay, sand, quicksand, gravel, boulders, conglomerate, rock, gas or other material to be encountered or work to be performed.

Various underground and overhead structures and utilities are shown on the plans. The location and dimensions of such structures and utilities, where given, are believed to be reasonably correct, but do not purport to be absolutely so. These structures and utilities are plotted on the Plans for the information of the Bidders, but information so given is not to be construed as a representation or assurance that such structures will be found or encountered as plotted, or that such information is complete or accurate.

I-2.02 FORM, PREPARATION AND PRESENTATION OF PROPOSALS
Each Proposal shall be submitted upon the Proposal Form and in accordance with the instructions included herein. The Proposal Form must not be detached herefrom. All blank spaces for bid prices must be filled in, in both words and figures, with the unit or lump sum prices, or both, for which the Proposal is made. The computed total price for each unit price Contract Item shall be determined by multiplying the estimated quantity of the item, as set forth in the Proposal Form, by the corresponding unit price bid for such item. The resulting product shall be entered in the appropriate blank space under the column headed "Computed Total Price for Item". The lump sum price bid for each lump sum price Contract Item shall also be entered in the column headed "Computed Total Price for Item". If a Proposal contains any omissions, erasures, alterations, additions, or items not called for in the itemized Proposal, or contains irregularities of any kind, such may constitute sufficient cause for rejection of the Proposal. In case of any discrepancy in the unit price or amount bid for any item in the Proposal, the price as expressed in written words will govern. In no case is the Agreement Form to be filled out or signed by the Bidder.

In the case of certain jobs bid Lump Sum a "Schedule of Unit Prices" must be filled out as an attachment to the Lump Sum proposal. These prices may be used as a guide for the negotiation of change orders, at the City's option.

The proposal must be signed and certified and be presented on the prescribed form in a sealed envelope on/or before the time and at the place stated in the Notice of Bidders, endorsed with the name of the person, firm or corporation presenting it, the date of presentation, and the title of the work for which the Proposal is made.

Unless the apparent low bidder is now engaged in or has recently completed contract work for the City of Tampa, he, if requested, shall furnish to the City, after the opening of bids and prior to award, a summary statement of record of construction experience over the past three (3) years with proper supporting evidence, and, if required by the City, shall also furnish a list of equipment and other facilities pertinent to and available for the proper execution of the proposed work, and a statement of financial resources to the extent necessary to establish ability to carry on the proposed work. The City may make further investigations as considered necessary with respect to responsibility of the Bidder to whom it appears may be awarded the Contract.

If forwarded by mail, the sealed envelope containing the Proposal, endorsed as directed above, must be enclosed in another envelope addressed as specified in the Notice to Bidders and sent by registered mail.

I-2.03 ADDENDA AND INTERPRETATIONS
No interpretation of the meaning of the Plans, Specifications, or other Contract Documents will be made to any Bidder orally.

Every request for such interpretation must be in writing, addressed to the Contract Administration Department, Tampa Municipal Office Building, 4th Floor North, City Hall Plaza, Tampa, Florida 33602. To be given consideration, such request must be received at least seven (7) days prior to the date fixed for the opening of the Proposals. Any and all such interpretations and any supplemental instructions will be in the form of written addenda which, if issued, will be sent by certified mail, with return receipt requested, to all prospective bidders at the respective addresses furnished, for such purposes, not later than three (3) working days prior to the date fixed for the opening of the Proposals, and if requested, a copy will be delivered to the prospective bidder's representative. Failure of any Bidder to receive any such addenda shall not relieve said Bidder from any obligation under his Proposal as submitted. All addenda so issued shall become part of the Contract Documents.

I-2.04 BID SECURITY
Each Proposal must be accompanied by a certified or cashier's check issued by a solvent bank or trust company and payable at sight to the City of Tampa, in compliance with Section 255.051 Florida Statutes, or a Bid Bond upon the form provided herein, in an amount of not less than five percent of the sum of the computed total amount of the Bidder's Proposal as a guarantee that if the Proposal is accepted, the Bidder will execute and fill in the proposed Contract and Public Construction Bond within twenty (20) days after notice of award of the Contract. Certified checks shall have all necessary documentary revenue stamps attached if required by law. Surety on Bid Bonds shall be a duly authorized surety company authorized to do business in the State of Florida, and all such Bonds shall be issued or countersigned by a local resident producing agent, and satisfactory evidence of the authority of the person or persons executing such Bond to Execute the same shall be submitted with the Bond. Bid Bonds shall be issued by a surety company acceptable to the City.

Within ten (10) days after the opening of Proposals, the bid security of all but the three lowest Bidders will be returned. The bid security of the remaining two Bidders whose Proposals are not accepted will be

returned within ten (10) days after the execution of the Contract, or, if no such Contract has been executed, within ninety (90) days after the date of opening Proposals. The bid security of the Bidder whose Proposal is accepted will be returned only after he has duly executed the Contract and furnished the required Public Construction Bond and insurance.

Should it be necessary for the City to retain the bid security and said bid security is in the form of checks, the checks of these Bidders will be returned if replaced by Bid Bonds in an amount equal to the amount of the checks of such Bidders in such form and issued by a surety company acceptable to the City.

A Bidder may withdraw his Proposal before the time fixed for the opening of Proposals, without prejudice to himself, by communicating his purpose, in writing, to the Mayor and City Council, and when his communication is received, the Proposal will be handed to him or his authorized agent unopened. No Bidder may withdraw his Proposal within ninety (90) days after the day of opening Proposals.

The Bidder whose Proposal is accepted shall enter into a written contract, upon the Agreement form included herein, for the performance of the work and furnish the required Public Construction Bond within twenty (20) days after written notice by the City of Award of Contract has been served on such Bidder personally or after receipt of the written notice by registered mail to such Bidder at the address given in his Proposal.

If the Bidder to whom a Contract is awarded refuses or neglects to execute it or fails to furnish the required Public Construction Bond within twenty (20) days after receipt by him of the Notice of Award of Contract, the amount of his bid security shall be forfeited and shall be retained by the City as liquidated damages, and not as a penalty, it being now agreed that said sum is a fair estimate of the amount of damages that the City will sustain in case said Bidder fails to enter into a Contract and furnish the required Public Construction Bond. If a Bid Bond was furnished, the full amount of the Bond shall become due and payable as liquidated damages caused by such failure. The full amount of the bid security shall be forfeited as liquidated damages without consideration of the fact that an award may be less than the full amount of the Bidder's Proposal, excepting that the award shall be within the conditions of said Proposal relating to the basis of consideration for an award. No plea of mistake in the bid or misunderstanding of the conditions of forfeiture shall be available to the Bidder for the recovery of his deposit or as a defense to any action based upon the neglect or refusal to execute a contract.

I-2.05 LAWS AND REGULATIONS
The Bidder who is awarded the Contract must comply with all laws of the State of Florida, and all applicable Ordinances of the City of Tampa respecting labor and compensation and with all other statutes, ordinances, rules and regulations applicable and having the force of law.

I-2.06 PUBLIC CONSTRUCTION BOND
The Bidder who is awarded the Contract will be required to furnish a Public Construction Bond upon the form provided herein, equal to 100 percent of the Contract price, such Bond to be executed by a surety company acceptable to the City of Tampa and licensed to underwrite contracts in the State of Florida. Surety companies shall have a rating of not less than: B+ Class VI as evaluated in the most recently circulated BEST'S KEY RATING GUIDE PROPERTY-LIABILITY.

I-2.07 SIGNATURE AND QUALIFICATIONS OF BIDDERS
Proposals must be signed in ink by the Bidder with signature in full. When a firm is a Bidder, the Proposal shall be signed in the name of the firm by one or more of the partners. When a corporation is a Bidder the officer signing shall set out the corporate name in full beneath which he shall sign his name and give the title of his office. The Proposal shall also bear the seal of the corporation attested by its secretary. Anyone signing the Proposal as agent must file with it legal evidence of his authority to do so.

Bidders who are nonresident corporations shall furnish to the City a duly certified copy of their permit to transact business in the State of Florida, signed by the Secretary of State, within ten days of the notice to do so. Such notice will be given to Bidders who are nonresident corporations, to whom it appears an award will be made, and the copy of the permit must be filed with the City before the award will be made. Failure to promptly submit this evidence of qualification to do business in the State of Florida may be basis for rejection of the Proposal.

I-2.08 REJECTION OF PROPOSALS
The City reserves the right to reject any Proposal if investigation of the Bidder fails to satisfy the City that such Bidder is properly qualified to carry out the obligations and to complete the work contemplated therein. Any or all Proposals will be rejected if there is reason to believe that collusion exists among Bidders. Proposals will be considered irregular and may be rejected if they show serious omissions, alterations in form, additions not called for, conditions or unauthorized alternates, or irregularities of any kind. The City reserves the right to reject any or all Proposals and to waive such technical errors as may be deemed best for the interests of the City.

I-2.09 QUANTITIES ESTIMATED ONLY
The estimate of quantities of the various items of work and materials, if set forth in the Proposal Form, is approximate only and is given solely to be used as a uniform basis for the comparison of Proposals. The quantities actually required to complete the Contract work may be less or more than so estimated, and if awarded a Contract for the work specified, the Contractor agrees that he will not make any claim for damages or for loss of profits because of a difference between the quantities of the various classes of work assumed for comparison of Proposals and quantities of work actually performed. The City further reserves the right to vary the quantities in any amount.

I-2.10 COMPARISON OF PROPOSALS
Except jobs bid on a "One Lump Sum" basis, proposals will be compared on the basis of a total computed price arrived at by taking the sum of the estimated quantity of each time and the corresponding unit price of each item, and including any lump sum prices on individual items.

The computed total prices for individual Contract Items and the total computed price for the entire Contract, as entered by the Bidder in the Proposal Form, are for convenience only and are subject to correction in the tabulation and computation of the Proposals.

I-2.11 BASIS OF AWARD
The Contract will be awarded, if at all, to the lowest responsible Bidder or Bidders, as determined by the City and by the terms and conditions of the Contract Documents. Unless all bids are rejected, the award will be made within ninety (90) days after the opening of Proposals. The successful Bidder will be required to possess, or obtain, a valid City Occupational License.

I-2.12 INSURANCE REQUIRED
The successful Bidder and his subcontractors will be required to procure and pay for insurance covering the work in accordance with the provisions of Article 6.02 of the Agreement as indicated on special instructions pages beginning with INS-1.

I-2.13 NO ASSIGNMENT OF BID
No Bidder shall assign his bid or any rights thereunder.

I-2.14 NONDISCRIMINATION IN EMPLOYMENT
Contracts for work under this Proposal will obligate the contractors and subcontractors not to discriminate in employment practices.

Bidders must, if requested, submit with their initial bid a signed statement as to whether they have previously performed work subject to the President's Executive Order Nos. 11246 and 11375.
Bidders must, if requested, submit a compliance report concerning their employment practices and policies in order to maintain their eligibility to receive the award of the Contract.

Successful Bidders must, if requested, submit a list of all subcontractors who will perform work on the project and written,

signed statement from authorized agents of the labor pools with which they will or may deal for employees on the work together with supporting information to the effect that said labor pools practices and policies are in conformity with Executive Order No. 11246 and that said labor pools will affirmatively cooperate in or offer no hindrance to the recruitment, employment and equal treatment of employees seeking employment and performing work under the Contract, or a certification as to what efforts have been made to secure such statements when such agents or labor pools have failed or refused to furnish them prior to the award of the Contract.

I-2.15 LABOR STANDARDS
The Bidder's attention is directed to the Contract Provisions of the Labor Standards for federally assisted projects which may be attached to and made a part of the Agreement.

I-2.16 NOTICE TO LABOR UNIONS
If applicable, the successful Bidder will be required to provide Labor Unions and other organizations of workers a completed copy of the form entitled "Notice to Labor Unions or Other Organizations of Workers", and such form may be made a part of the Agreement.

I-2.17 NOTICE TO PROSPECTIVE FEDERALLY-ASSISTED CONSTRUCTION CONTRACTORS
A Certification of Nonsegregated Facilities, as required by the May 9, 1967, Order (32 F.R. 7439, May 19, 1967) on Elimination of Segregated Facilities, by the Secretary of Labor, must be submitted to said Secretary prior to the award of a federally-assisted construction and Contract exceeding $10,000 which is not exempt from the provisions of the Equal Opportunity Clause. The form of certification may be bound herein following the form of Bid Bond.

Contractors receiving federally-assisted construction Contract awards exceeding $10,000 which are not exempt from the provisions of the Equal Opportunity Clause will be required to provide for the forwarding of the following notice to prospective subcontractor for supplies and construction contracts where the subcontracts exceed $10,000 and are not exempt from the provisions of the Equal Opportunity Clause:

NOTICE TO PROSPECTIVE SUBCONTRACTORS OF REQUIREMENT
FOR CERTIFICATIONS OF NONSEGREGATED FACILITIES

"A Certification of Nonsegregated Facilities, as required by the May 9, 1967, Order (32 F.R. 7439, May 19, 1967) on Elimination of Segregated Facilities, by the Secretary of Labor, must be submitted prior to the award of a subcontract exceeding $10,000 which is not exempt from the provisions of the Equal Opportunity Clause."

"Contractors receiving subcontract awards exceeding $10,000 which are not exempt from the provisions of the Equal Opportunity Clause will be required to provide from the forwarding of this notice to prospective subcontractors for supplies and construction contracts where the subcontracts exceed $10,000 and are not exempt from the provisions of the Equal Opportunity Clause."

The United States requires a pre-award conference if a proposed construction contract exceeds one million dollars to determine if the the prospective contractor is in compliance with the Equal Employment Opportunity requirements of Executive Order 11246 of September 24, 1965. In such instances, a meeting may be scheduled at which the prospective contractor must specify what affirmative action he has taken or proposed to take to assure equal employment opportunity which must be approved by the United States before award of the contract will be authorized.

Bidders must be prepared to submit an Equal Employment Opportunity (EEO) plan at a pre-award conference. The plan must include bidding opportunities offered by the Bidder to minority subcontractors.

On October 13, 1971, President Nixon issued Executive Order 11246 emphasizing the government's commitment to the promotion of minority business enterprise. Accordingly, the United States is firmly committed to the utilization of available resources to support this important program. U.S. agencies are most interested in realizing minority participation on the subject. Achieving equal employment opportunity compliance is required through Executive Order 11246. WE cannot emphasize too strongly that minority subcontractors be extended subcontractors bidding opportunities as but one step in your affirmative action policy.

Due to the importance of this contract, U.S. Agencies may conduct an EEO Conference prior to the award of the Contract. It is suggested that the responsive Bidder confirm the minority subcontractors he contacted for bids or quotations in his EEO plan submitted at the conference.

I-2.18 EEO AFFIRMATIVE ACTION REQUIREMENTS
By the submission of a Proposal, each Bidder acknowledges that he understands and will agree to be bound by the equal opportunity requirements of Federal regulations which shall be applicable throughout the performance of work under any contract awarded pursuant to solicitation. Each Bidder agrees that if awarded a contract, he will similarly bind contractually each subcontractor. In policies, each Bidder further understands and agrees that if awarded a contract, he must engage in Affirmative Action directed to promoting and ensuring equal employment opportunity in the work force used under the contract (and he must require contractually the same effort of all subcontractors whose subcontracts exceed $100,000). The Bidder understands and agrees that "Affirmative Action" as used herein shall constitute a good faith effort to achieve and maintain minority employment in each trade in the on-site work force used on the project. * * * * * * * END of SECTION * * * * * * *

CITY OF TAMPA INSURANCE REQUIREMENTS

During the life of the award/contract the Awardee/Contractor shall provide, pay for, and maintain insurance with companies authorized to do business in Florida, with an A.M. Best rating of B+ (or better) Class VII (or higher), or otherwise be acceptable to the City if not rated by A.M. Best. All insurance shall be from responsible companies duly authorized to do business in the State of Florida.

All commercial general liability insurance policies (and Excess or Umbrella Liability Insurance policies, if applicable) shall provide that the City is an additional insured as to the operations of the Awardee/Contractor under the award/contract including the additional insured endorsement, the subrogation wavier endorsement, and the Severability of Interest Provision. In lieu of the additional named insured requirement, if the Awardee/Contractor's company has a declared existing policy which precludes it from including additional insureds, the City may permit the Contractor to purchase an Owners and Contractors Protective Liability policy. Such policy shall be written in the name of the City at the same limit as is required for General Liability coverage. The policy shall be evidenced on an insurance binder which must be effective from the date of issue until such time as a policy is in existence and shall be submitted to the City in the manner described below as applicable to certificates of insurance.

The insurance coverages and limits required must be evidenced by a properly executed Acord 25 Certificate of Insurance form or its equivalent. Each Certificate must be personally manually signed by the Authorized Representative of the insurance company shown in the Certificate with proof that he/she is an authorized representative thereof. Thirty days' written notice must be given to the City of any cancellation, intent not to renew, or reduction in the policy coverages, except in the application of the aggregate liability limits provisions. Should any aggregate limit of liability coverage be reduced, it shall be immediately increased back to the limit required by the contract. The insurance coverages required herein are to be primary to any insurance carried by the City or any self-insurance program thereof.

The following coverages are required:

A. Commercial General Liability Insurance shall be provided on the most current Insurance Services Office (ISO) form or its equivalent. This coverage must be provided to cover liability arising from premises and operations, independent contractors, products and completed operations, personal and advertising injury, contractual liability, and XCU exposures (if applicable). Completed operations liability coverage shall be maintained for a minimum of one-year following completion of work. The amount of Commercial General Liability insurance shall not be less than the amount specified.

(a) $1,000,000 per occurrence and a $2,000,000 general aggregate for projects valued at $2,000,000 or less. General aggregate limit for projects over that price shall equal or exceed the price of the project. An Excess or Umbrella Liability insurance policy can be provided to meet the required limit. Risk Management may be contacted for additional information regarding projects of this nature.

B. Automobile Liability Insurance shall be maintained in accordance with the laws of the State of Florida, as to the ownership, maintenance, and use of all owned, non-owned, leased, or hired vehicles. The amount of Automobile Liability Insurance shall not be less than the amount specified.

(a) $500,000 combined single limit each occurrence bodily injury & property damage- for projects valued at $100,000 and under

(b) $1,000,000 combined single limit each occurrence bodily injury & property damage – for projects valued over $100,000

C. Worker's Compensation and Employer's Liability Insurance shall be provided for all employees engaged in the work under the contract, in accordance with the Florida Statutory Requirements. The amount of the Employer's Liability Insurance shall not be less than:

(a) $500,000 bodily injury by accident and each accident, bodily injury by disease policy limit, and bodily injury by disease each employee – for projects valued at $100,00 and under
(b) $1,000,000 bodily injury by accident and each accident, bodily injury by disease policy limit, and bodily injury by disease each –for projects valued over $100,000

D. Excess Liability Insurance or Umbrella Liability Insurance may compensate for a deficiency in general liability, automobile, or worker's compensation insurance coverage limits. If the Excess or Umbrella policy is being provided as proof of coverage, it must name the City of Tampa as an additional insured **(IF APPLICABLE).**

E. Builder's Risk Insurance, specialized policy designed to cover the property loss exposures that are associated with construction of buildings. The amount of coverage should not be less than the amount of the project. **(IF APPLICABLE).**

F. Installation Floater- a builder's risk type policy that covers specific type of property during its installation, is coverage required for highly valued equipment or materials such as compressors, generators, or other machinery that are not covered by the builder's risk policy **(IF APPLICABLE).**

G. Longshoreman's & Harbor Worker's Compensation Act/Jones Act coverage shall be maintained for work being conducted upon navigable water of the United States. The limit required shall be the same limit as the worker's compensation/employer's liability insurance limit **(IF APPLICABLE).**

H. Professional Liability shall be maintained against claims of negligence, errors, mistakes, or omissions in the performance of the services to be performed and furnished by the Awardee/Contractor or any of its subcontractors when it acts as a DESIGN PROFESSIONAL. The amount of coverage shall be no less than amount specified **(IF APPLICABLE).**

(a) $1,000,000 per incident and general aggregate. Note all claims made policies must provide the date of retroactive coverage.

The City may waive any or all of the above referenced insurance requirements based on the specific nature of goods or services to be provided under the award/contract.

ADDITIONAL INSURED - The City must be included as an additional insured by on the general and (Excess or Umbrella liability policies) if applicable. Alternatively, the Contractor may purchase a separate owners protective liability policy in the name of the City in the specified amount as indicated in the insurance requirements.

CLAIMS MADE POLICIES - If any liability insurance is issued on a claims made form, Contractor agrees to maintain uninterrupted coverage for a minimum of one year following completion and acceptance of the work either through purchase of an extended reporting provision, or through purchase of successive renewals with a retroactive date not later than the beginning of performance of work for the City. The retroactive date must be provided for all claims made policies.

CANCELLATION/NON-RENEWAL - Thirty (30) days written notice must be given to the City of any cancellation, intent to non-renew or material reduction in coverages (except aggregate liability limits). However, ten (10) days notice may be given for non-payment of premium. Notice shall be sent to the City of Tampa Department of Public Works, 306 E. Jackson Street, Tampa, FL 33602.

NUMBER OF POLICIES - General and other liability insurance may be arranged under single policies for the full amounts required or by a combination of underlying policies with the balance provided by an excess or umbrella liability insurance policy.

WAIVER OF SUBROGATION - Contractor waives all rights against City, its agents, officers, directors and employees for recovery of damages to the extent such damage is covered under the automobile or excess liability policies.

SUBCONTRACTORS - It is the Contractor's responsibility to require all subcontractors to maintain adequate insurance coverage.

PRIMARY POLICIES - The Contractor's insurance is primary to the City's insurance or any self insurance program thereof.

RATING - All insurers shall be authorized to do business in Florida, and shall have an A.M. Best rating of B+ (or better), Class VII (or higher), or otherwise be acceptable to the City if not rated by A.M. Best.

DEDUCTIBLES - The Contractor is responsible for all deductibles. In the event of loss which would have been covered but for the presence of a deductible, the City may withhold from payment to Contractor an amount equal to the deductible to cover such loss should full recovery not be obtained under the insurance policy.

INSURANCE ADJUSTMENTS - These insurance requirements may be increased, reduced, or waived at the City's sole option with an appropriate adjustment to the Contract price.

Document updated on 12/22/2009 by RLD (Risk Management)

SOLICITATION FOR SUBCONTRACTOR QUOTES

From:
OUR COMPANY NAME:
TELEPHONE NUMBER:
ADDRESS:
FAX NUMBER:
E-MAIL ADDRESS:

To Subcontractor:

Our firm is in the process of preparing a bid for a **City of Tampa Contract**. Please accept this notice as our request for quotes for the scope of work identified below. Please respond to this request by filling in the information below and returning via e-mail or fax to the address or number provided. Please contact us if you need any assistance in obtaining bonding, lines of credit, insurance, assistance in obtaining necessary equipment, supplies, materials, participation in a City-sponsored mentor-protégé program, or if you have any questions.

Plans and Specs for this project are posted at:
http://www.tampagov.net/dept_contract_administration/programs_and_services/construction_project_bidding/

CONTRACT NO.:
CONTRACT NAME:
CITY'S BID OPENING DATE:
DEADLINE FOR YOUR SUBCONTRACTOR BID OR RESPONSE:
SPECIFIC SCOPE OF WORK:

Please complete and submit with your subcontract bid or response:
YOUR FIRM'S NAME:
MAILING ADDRESS:
CITY:
STATE:
ZIP:
FAX NUMBER:
E-MAIL ADDRESS:
__Yes, my company is interested in quoting this project for the following items of work:

__No, my company will not quote this project for the following reason(s):

(Sample Suggested Sub Solicitation 3-9-9 Tampa MBDO)

PROPOSAL

To the Mayor and City Council of the City of Tampa, Florida:

Name of Bidder _____

_____
Business Phone Number and Email Address

_____
Business Name and Mailing Address

_____
Phone Number and Name of Contact Regarding Permits

_____
Contractor/Qualifiers Name and Federal Identification Number

Date of Proposal _____

(If Bidder is a firm, fill in the following blanks):

Names and Residential Addresses of Partners

_____

_____

(If Bidder is a corporation, fill in the following blanks):

Organized under the laws of the State of _____

Names and Address of President

_____

_____

Name and Address of Vice President

_____

_____

Name and Address of Secretary

_____

_____

Names and Address of Treasurer

_____

_____

The above-named Bidder affirms and declares:

(1) That the Bidder is of lawful age and that no other person, firm or corporation has any interest in this Proposal or in the Contract proposed to be entered into.

(2) That this Proposal is made without any understanding, agreement or connection with any other person, firm, or corporation making Proposal for the same purposes, and is in all respects fair and without collusion or fraud.

(3) That the Bidder is not in arrears to the City of Tampa, upon debt or contract, and is not a defaulter, as surety or otherwise, upon any obligation to the City of Tampa.

(4) That no officer or employee or person whose salary is payable in whole or in part from the City Treasury is, shall be or become interested, directly or indirectly, as a contracting party, partner, stockholder, surety or otherwise, in this Proposal, or in the performance of the Contract, or in the supplies, materials, or equipment and work or labor to which it relates, or in any portion of the profits thereof.

(5) That the Bidder has carefully examined the site of the work and that, from his own investigations, he has satisfied himself as to the nature and location of the work, the character, quality, and quantity of materials and the kinds and extent of equipment and other facilities needed for the performance of the work, the general and local conditions and all difficulties to be encountered, and all other items which may, in any way, affect the work or its performance.

(6) That the Bidder

_____ Has; Treasury Number _____

_____ Has not
(Check applicable box)

previously performed work under the President's Executive Order Nos. 11246 and 11375.

(7) That the undersigned, as Bidder, also declares that he has carefully examined and fully understands all the component parts of the Contract Documents and agrees that he will execute the Contract and finish the required Performance Bond and will completely perform the work in strict accordance with the terms of the Contract and the Contract Documents therein referred to for the following prices, to wit:

Contract Item No.	Estimated Quantity	Description and Price in Words	Computed Total Price for Item in Figures
BASE BID	LS	The work includes the furnishing of all labor, equipment, and material for the demolition, removal and replacement of the existing Primary Sludge Motor Control Center, two (2) three-phase transformers, a single phase and three-phase panel board, lighting fixtures, any allowances as stated in SP-60, and with all associated work required for a complete project in accordance with the Contract Documents. _____ _____ dollars and _____ cents (BASE BID) LS	$_____

Computed Total Price In Words:

_____

_____ dollars and _____ cents.

Computed Total Price in Figures: $_____

The bidder acknowledges that the following addenda have been received and that the changes covered by the addendum(s) have been taken into account in this proposal: #1 ___ #2 ___ #3 ___ #4___ #5___.

The bidder acknowledges the requirements of the City of Tampa's Equal Business Opportunity Program.

Bidder acknowledges that included in the various items of the proposal and the Total Bid Price are costs for complying with the Florida Trench Safety Act (90096), (Laws of Fla.) effective October 1, 1990. The bidder further identifies the costs to be summarized below:

	Trench Safety Measure (Description)	Unit of Measure (LF, SY)	Unit Quantity	Unit Cost	Extended Cost
A.	_____	_____	_____	_____	_____
B.	_____	_____	_____	_____	_____
C.	_____	_____	_____	_____	_____
D.	_____	_____	_____	_____	_____

Total Cost $_____

Signed _____

Failure to complete the above may result in the bid being declared non-responsive.

Accompanying this Proposal is a certified check, cashier's check or Bid Bond (form included herein must be used) on the form at least five (5) percent of the total amount of the Proposal which check shall become the property of the

_____ of _____
(Name of Bank or Surety) (City & State)

City of Tampa, or which bond shall become forthwith due and payable to the City of Tampa, if this Proposal shall be accepted by the City of Tampa and the undersigned shall fail to execute a contract with and to furnish the required Performance Bond and Payment Bond to the City of Tampa within twenty (20) days after the date of receipt of written Notice of Award by the City of Tampa to the undersigned so to do.

Dated _____, 20___

_____
(Name of Bidder)

_____
(Address of Bidder)

_____
(Signature)

_____
(Title)

Where Bidder is a Corporation:

Attest:

_____
Secretary

AFFIX
CORPORATE
SEAL

(ACKNOWLEDGMENT OF PRINCIPAL)

STATE OF)
) SS:
COUNTY OF)

For a Corporation:

STATE OF _____
COUNTY OF _____

The foregoing instrument was acknowledged before me this ___ of _____, 20___ by _____ of _____, a _____ corporation, on behalf of the corporation. He/she is ___ personally known or has ___ produced _____ as identification.

_____
Notary

My Commission Expires:

_____

For an Individual:

STATE OF _____
COUNTY OF _____

The foregoing instrument was acknowledged before me this ___ of _____, 20___ by _____ who is ___ personally known to me or has ___ produced _____ as identification.

_____
Notary

My Commission Expires:

_____

For a Firm:

STATE OF _____
COUNTY OF _____

The foregoing instrument was acknowledged before me this ___ of _____, 20___ by _____ who signed on behalf of the said firm. He/she is ___ personally known or has ___ produced _____ as identification.

_____
Notary

My Commission Expires:

_____

_____

Good Faith Effort Compliance Plan for Small Local Business Subcontracting

City of Tampa - Equal Business Opportunity Program

Contract _____ **Bid Date** _____

Bidder _____

Signature _____ **Date** _____

Name _____ **Title** _____

The following Compliance Plan is a true report of Good Faith Efforts made to accomplish subcontracting goals for Small Local Business Enterprises, SLBEs, on the referenced contract:

□ **The goal for SLBE participation has been met or exceeded. See the DMI form reporting subcontractors to be utilized.**
(Check Box, if appropriate; the remainder of the Compliance Plan need not be reported.)

□ **The goal for SLBE participation has not been met. The following is a recap of Good Faith Efforts made:**
(Check applicable boxes below. Enclose additional documents, and/or add remarks below as needed.)

(1) Soliciting through reasonable and available means the interest of SLBEs that have the capability to perform the work of the contract. The Bidder or Contractor must solicit this interest within sufficient time to allow the SLBEs to respond. The Bidder or Contractor must take appropriate steps to follow up initial solicitations with interested SLBEs. □ See DMI report forms for subcontractors solicited. □ See enclosed supplemental data on solicitation efforts. □ Remarks:

(2) Providing interested SLBEs with adequate information about the plans, specifications, and requirements of the contract, including addenda, in a timely manner to assist them in responding to the solicitation. □ See enclosed sample solicitation. □ Remarks:

(3) Negotiating in good faith with interested SLBEs that have submitted bids. Documentation of negotiation must include the names, addresses, and telephone numbers of SLBEs that were solicited; the date of each such solicitation; a description of the information provided regarding the plans and specifications for the work selected for subcontracting; and evidence as to why agreements could not be reached with SLBEs to perform the work. That there may be some additional costs involved in soliciting and using SLBEs is not a sufficient reason for a contractor's failure to meet the goals, as long as such costs are reasonable. Bidders are not required to accept higher quotes in order to meet the goal. □ DMI subcontractor-utilized forms reflect successful negotiations □ This project is of a low-bid nature and negotiations are limited to clarifications of scope and specifications. □ See enclosed document. □ Remarks:

(4) Not rejecting SLBEs as being unqualified without sound reasons based on a thorough investigation of their capabilities. The SLBEs standing within its industry, membership in specific groups, organizations, or associations and political or social affiliations are not legitimate causes for rejecting or not soliciting bids to meet the goals. □ Not applicable. □ See attached explanation for rejection of a low-bidding subcontractor's bid. □ Remarks:

(5) Making a portion of the work available to SLBE subcontractors and suppliers and to select those portions of the work or material consistent with the available SLBE subcontractors and suppliers, so as to facilitate meeting the goal. □ Sub-Contractors were allowed to bid on their own choice of work or trade without restriction to a pre-determined portion. □ See enclosed comments. □ Remarks:

(6) Making good faith efforts, despite the ability or desire of a Bidder or Contractor to perform the work of a contract with its own organization. A Bidder or Contractor who desires to self-perform the work of a contract must demonstrate good faith efforts unless the goal has been met. □ Sub-Contractors were not prohibited from submitting bids on work not usually sub-contracted. □ Remarks:

(7) Selecting portions of the work to be performed by SLBEs in order to increase the likelihood that the goals will be met. This includes, where appropriate, breaking out contract work items into economically feasible units to facilitate SLBE participation, even when the Bidder or Contractor might otherwise prefer to perform these work items with its own forces. □ Sub-Contractors were allowed to bid on their own choice of work or trade without restriction to a pre-determined portion. □ Sub-Contractors were not prohibited from submitting bids on work not usually sub-contracted. □ See enclosed comments. □ Remarks:

(8) Making efforts to assist interested SLBEs in obtaining bonding, lines of credit, or insurance as required by the city or contractor. □ See enclosed sample solicitation □ see enclosed document. □ Remarks:

(9) Making efforts to assist interested SLBEs in obtaining necessary equipment, supplies, materials, or related assistance or services, including participation in a City-sponsored mentor-protégé program. □ See enclosed sample solicitation. □ See enclosed document. □ Remarks:

(10) Effectively using the services of the City and other organizations that provide assistance in the recruitment and placement of SLBEs. □ See enclosed document. □ The following services were used:

Other Supporting Good Faith Efforts: □ See enclosed document. □ Remarks:

GFECP

Compliance Plan: Guidance For Meeting Good Faith Efforts

1. All firms on the SLBE Goal Setting List must be solicited and documentation provided for email, fax, letters, phone calls, and other communication with the listed firms. The DMI Solicited and DMI-Utilized forms must be completed for all firms solicited or utilized. Other opportunities for subcontracting may be explored by consulting the City of Tampa and/or Hillsborough County certification listings of SLBE's.

2. Solicitation of SLBEs, via written or electronic notification, should provide specific information on the services needed, where plans can be reviewed and assistance offered in obtaining these, if required. Solicitations should be typically be sent a week or more before the bid date. Sample copies of the bidder's solicitations should be provided.

3. With any quotes received, a follow-up should be made whenever needed to confirm scope of work. For any SLBE low quotes rejected, an explanation should be provided detailing negotiation efforts.

4. If a low bid SLBE is rejected or deemed unqualified the contractor must provide an explanation and supporting documentation for this decision.

5. Prime should break down portions of work into economical feasible opportunities for subcontracting. The SLBE directory can be useful in identifying additional subcontracting opportunities and firms not listed in the "SLBE Goal Setting Firms List."

6. Contractor should not preclude SLBEs from bidding on any part of work, even if the Contractor can self-perform the work.

7. Contractor should avoid relying solely on subcontracting out work where availability is not sufficient to attain pre-determined goal.

8. In its solicitations, the Bidder should offer assistance to SLBEs in obtaining bonding, insurance, etc, if required of subcontractors by the City or Prime Contractor.

9. In its solicitation, the Bidder should offer assistance in obtaining equipment for a specific job to SLBEs, if needed.

10. Contractor should use the services offered by such agencies as the Minority Business Development Office of the City of Tampa, Hillsborough County and the NAACP Empowerment Center for the recruitment and placement of SLBEs.

City of Tampa –DMI -Schedule of All Sub-(Contractors/Consultants/Suppliers) Solicited

(FORM MBD-10)

Contract No.:_____ Contract Name:_____

Contractor Name:_____ Address:_____

Federal ID:_____Phone:_____ Fax:_____ Email:_____

[] No Firms were contacted/solicited for this contract.

[] No Firms were contacted because:_____

[] See attached documents with supplemental information.

NIGP Code General Categories: Buildings = 909, General = 912, Heavy = 913, Trades = 914, Architects = 906, Engineers & Surveyors = 925, Supplier = 912-77

This DMI Schedule Must Be Submitted with the Bid or Proposal (Do Not Modify This Form)

S = SLBE W=WMBE Federal ID	Company Name Address Phone & Fax	Type of Ownership (F=Female M=Male) BF BM = African Am. HF HM = Hispanic Am. AF AM = Asian Am. NF NM = Native Am. CF CM = Caucasian	Trade or Services NIGP Code (listed above)	Contact Method L=Letter F=Fax E=Email P=Phone	Quote or Resp. Rec'd Y/N

It is hereby certified that the information provided is an accurate and true account of contacts and solicitations for sub – contracting opportunitieson this contract. ***This form must be completed and submitted with the bid or proposal***.Modifying or failing to sign DMI forms may result in Non-Compliance and/or deemed non-responsive.

Signed:_____ Name/Title:_____ Date:_____

Note: Detailed Instructions for completing this form are on the next page

Instructions for completing The Sub-(Contractors/Consultants/ Suppliers) Solicited Form (Form MBD-10)

This form must be submitted with all bids or proposals. All subcontractors (regardless of ownership or size) solicited and subcontractors from whom unsolicited quotations were received must be included on this form. The instructions that follow correspond to the headings on the form required to be completed.Note: Ability or desire to self-perform all work shall not exempt the prime from Good Faith Efforts when Goal has been established.

- **Contract No.** This is the number assigned by the City of Tampa for the bid or proposal.
- **Contract Name.** This is the name of the contract assigned by the City of Tampa for the bid or proposal.
- **Contractor Name.** The name of your business.
- **Address.** The physical address of your business.
- **Federal ID.**FIN. A number assigned to your business for tax reporting purposes.
- **Phone.** Telephone number to contact business.
- **Fax.** Fax number for business.
- **Email.** Provide email address for electronic correspondence.
- **No Firms were contacted/solicited for this contract.** Checking the box indicates that a pre-determined Subcontract Goal was not set by the City resulting in your business not using subcontractors and will self-perform all work. If during the performance of the contract you employ subcontractors, the City must pre-approve subcontractors. Use of the "Sub-(Contractors/Consultants/Suppliers) Payments" form must be submitted with your invoices. Note: Certified SLBE or WMBE firms bidding as Primes are not exempt from outreach and solicitation of subcontractors.
- **No Firms were contacted because.** Provide brief explanation why no firms were contacted/solicited.
- **See attached documents.**Check box, if after you have completed the DMI Form in its entirety, you are providing any additional documentation relating to the form.All DMI data not submitted on the MBD Form-10 must be in the same format and have all requested data from MBD Form-10 included.

The following instructions are for information of any and all subcontractors solicited.

- **"S" = SLBE, "W" = WMBE.** Enter "**S**" for firms Certified by the City as Small Local Business Enterprises and/or "**W**" for firms Certified by the City as Women/Minority Business Enterprise.
- **Federal ID.**FIN. A number assigned to a business for tax reporting purposes. This information is critical in proper identification of the subcontractor.
- **Company Name, Address, Phone & Fax**. Provide company information for verification of payments.
- **Type of Ownership.** Indicate the Ethnicity and Gender of the owner of the subcontracting business.
- **Trade, Services, or Materials** Indicate the trade, service, or material provided by the subcontractor. NIGP codes are listed at top section of document.
- **Contact Method L=letter, F=fax, E=Email, P=Phone.** Indicate with letter the method of soliciting for bid.
- Q**uote or Resp. (response) Rec'd (received) Y/N**. Indicate "Y" Yes if you received a quotation or if you received a response to your solicitation. Indicate "N" No if you received no response to your solicitation from the subcontractor.

If any additional information is required or you have any questions, you may call the Minority Business Development Office at (813) 274-5522.

City of Tampa –DMI Schedule of Sub-(Contractors/Consultants/Suppliers) to be Utilized

(FORM MBD-20)

Contract No.:_____ Contract Name:_____

Contractor Name:_____ Address:_____

Federal ID:_____Phone:_____ Fax:_____ Email:_____

[ ] See attached documents.

[ ] No Subcontracting (of any kind) will be performed on this contract.

NIGP Code General Categories: Buildings = 909, General = 912, Heavy = 913, Trades = 914, Architects = 906, Engineers & Surveyors = 925, Supplier = 912-77

This DMI Schedule Must Be Submitted with the Bid or Proposal (Do Not Modify This Form)

Enter "S" for firms Certified as Small Local Business Enterprises, "W" for firms Certified as Women/Minority Business Enterprise

S = SLBE W=WMBE Federal ID	Company Name Address Phone & Fax	Type of Ownership (F=Female M=Male) BF BM = African Am. HF HM = Hispanic Am. AF AM = Asian Am. NF NM = Native Am. CF CM = Caucasian	Trade, Services, or Materials NIGP Code Listed above	Amount of Quote. Letter of Intent if available.	Percent of Scope/Contract %

Total Subcontract/Supplier Utilization $_____

Total SLBE Utilization $ _____

Total WMBE Utilization $ _____

Percent SLBE Utilization of Total Bid/Proposal Amt. _____% Percent WMBE Utilization of Total Bid/Proposal Amt. _____%

It is hereby certified that the following information is a true and accurate account of utilization for sub-contracting opportunities on this contract. *This form must be completed and submitted with the bid or proposal*. Modifying or failing to sign DMI forms may result in Non-Complianceand/or deemed non-responsive.

Signed:_____ Name/Title:_____ Date:_____

Note: Detailed Instructions for completing this form are on the next page.

Instructions for completing The Sub-(Contractors/Consultants/ Suppliers) to be Utilized Form

(Form MBD-20)

This form must be submitted with all bids or proposals. All subcontractors projected to be utilized must be included on this form.

- **Contract No.** This is the number assigned by the City of Tampa for the bid or proposal.
- **Contract Name.** This is the name of the contract assigned by the City of Tampa for the bid or proposal.
- **Contractor Name.** The name of your business.
- **Address.** The physical address of your business.
- **Federal ID.**FIN. A number assigned to your business for tax reporting purposes.
- **Phone.** Telephone number to contact business.
- **Fax.** Fax number for business.
- **Email.** Provide email address for electronic correspondence.
- **No Subcontracting (of any kind) will be performed on this contract.** Checking box indicates your business will not use subcontractors when no Subcontract Goal has been set by the City, but will self-perform all work. When subcontractors are utilized during the performance of the contract, the "Sub-(Contractors/Consultants/Suppliers) Payments" form must be submitted with your invoices. Note: Certified SLBE or WMBE firms bidding as Primes are not exempt from outreach and solicitation of subcontractors.
- **See attached documents.** Check if you have provided any additional documentation relating to the utilization of subcontractors.
-

The following instructions are for information of Any and All subcontractors to be utilized.

- **Federal ID.**FIN. A number assigned to a business for tax reporting purposes. This information is critical in proper identification of the subcontractor.
- **"S" = SLBE, "W" = WMBE.** Enter "**S**" for firms Certified by the City as Small Local Business Enterprises and/or "**W**" for firms Certified by the City as Women/Minority Business Enterprise.
- **Company Name, Address, Phone & Fax**. Provide company information for verification of payments.
- **Type of Ownership.** Indicate the Ethnicity and Gender of the owner of the subcontracting business.
- **Trade, Services, or Materials (NIGP code if Known)** Indicate the trade, service, or material provided by the subcontractor. NIGP codes are available at http:/www.tampagov.net/mbd.
- **Amount of Quote, Letters of Intent** (required for both SLBEs and WMBEs)
- **Percent of Work/Contract.** Indicate the percent of the total contract price the subcontract(s) represent.
- **Total Subcontract/Supplier Utilization.** – Provide total dollar amount of all subcontractors/suppliers projected to be used for the contract. (Dollar amounts may not apply to CCNA proposals.)
- **Total SLBE Utilization.** Provide total dollar amount for all projected SLBE subcontractors/Suppliers used for this contract. (Dollar amounts may not apply to CCNA proposals.)
- **Total WMBE Utilization.** Provide total dollar amount for all projected WMBE subcontractors/Suppliers used for this contract. (Dollar amounts may not apply to CCNA proposals.)
- **Percent SLBE Utilization.** Total amount allocated to SLBEs divided by the total bid amount. (Dollar amounts may not apply to CCNA proposals.)
- **Percent WMBE Utilization.** Total amount allocated to WMBEs divided by the total bid/proposal amount. (Dollar amounts may not apply to CCNA proposals.)

If any additional information is required or you have any questions, you may call the Minority Business Development Office at (813) 274-5522.

TAMPA BID BOND

Contract 13-C-00043; Howard F. Curren AWTP Old Primary Sludge Pumping Station Motor Control Center Replacement

KNOW ALL MEN BY THESE PRESENTS, that we, _____

_____

(hereinafter called the Principal) and _____

(hereinafter called the Surety) a Corporation chartered and existing under the laws of the State of _____, with its principal offices in the City of _____, and authorized to do business in the State of Florida, are held and firmly bound unto the City of Tampa, a Municipal Corporation of Hillsborough County, Florida, in the full and just sum of 5% of the amount of the (Bid) (Proposal) good and lawful money of the United States of America, to be paid upon demand of the City of Tampa, Florida, to which payment will and truly to be made we bind ourselves, our heirs, executors, administrators, successors, and assigns, jointly and severally and firmly these presents.

WHEREAS, the Principal is about to submit, or has submitted to the City of Tampa, Florida, a Proposal for the construction of certain facilities for the City designated Contract 13-C-00043, Howard F. Curren AWTP Old Primary Sludge Pumping Station Motor Control Center Replacement.

WHEREAS, the Principal desires to file this Bond in accordance with law, in lieu of a certified Bidder's check otherwise required to accompany this Proposal.

NOW, THEREFORE: The conditions of this obligation are such that if the Proposal be accepted, the Principal shall, within twenty (20) days after the date of receipt of written Notice of Award, execute a contract in accordance with the Proposal and upon the terms, conditions and price set forth therein, in the form and manner required by the City of Tampa, Florida and execute a sufficient and satisfactory Public Construction Bond payable to the City of Tampa, Florida in an amount of one hundred percent (100%) of the total contract price, in form and with security satisfactory to said City, then this Bid Bond obligation is to be void; otherwise to be and remain in full force and virtue in law, and the Surety shall, upon failure of the Principal to comply with any or all of the foregoing requirements within the time specified above, immediately pay to the aforesaid City, upon demand, the amount thereof, in good and lawful money of the United States of America, not as a penalty, but as liquidated damages.

IN TESTIMONY THEREOF, the Principal and Surety have caused these presents to be duly signed and sealed this _____ day of _____, 20___.

Principal _____

BY _____

TITLE _____

BY _____

TITLE _____

(SEAL) _____

Producing Agent

_____

Producing Agent's Address

_____

Name of Agency

_____

The addition of such phrases as "not to exceed" or like import shall render the (Bid) (Proposal)non-responsive.

AGREEMENT

For furnishing all labor, materials and equipment, together with all work incidental thereto, necessary and required for the performance of the work for the construction of Contract 13-C-00043 in accordance with your Proposal dated _____, amounting to a total of $_____ as completed in accordance with subsections I-2.09 and I-2.10 of the Instruction to Bidders.

THIS AGREEMENT, made and entered into in triplicate, this ____ day of _____, 20___, between the City of Tampa, Florida, hereinafter called the City, and hereinafter called the Contractor.

WITNESSETH that, in consideration of the mutual stipulations, agreements, and covenants herein contained, the parties hereto have agreed and hereby agree with each other, the Party of the First Part for itself, its successors and assigns, and the Party of the Second Part for itself, or himself, or themselves, and its successors and assigns, or his or their executors, administrators and assigns, as follows:

Contract 13-C-00043; Howard F. Curren AWTP Old Primary Sludge Pumping Station Motor Control Center Replacement, shall include, but not be limited to, demolition/removal and replacement of the existing HFC AWTP Primary Sludge Motor Control Center, two (2) three-phase transformers, a single phase and three-phase panel board, lighting fixtures with all associated work required for a complete project in accordance with the Contract Documents.

Contract Documents referred to in Article 1.01 of this Agreement also includes this volume, applicable standard drawings, the plans and any provisions referred to whether actually attached or not.

TAMPA AGREEMENT

SECTION 1
GENERAL

ARTICLE 1.01 THE CONTRACT

Except for titles, subtitles, headings, running headlines, and tables of contents (all of which are printed herein merely for convenience), the following, except for such portions thereof as may be specifically excluded, constitute the Contract:

The Notice to Bidders;
The Instructions to Bidders, including Special Instructions and General Instructions;
The Proposal;
The Bid Bond;
The Certification of Nonsegregated Facilities;
The Notice of Award;
The Agreement;
The Performance Bond;
The Notice To Proceed;
The Specifications, including the General Provisions, the Workmanship and Materials, the Specific Provisions or the Contract Items
The Plans;
All Supplementary Drawings Issued after award of the Contract;
All Addenda issued by the City prior to the receipt of proposals;
All provisions required by law to be inserted in this Contract, whether actually inserted or not.

ARTICLE 1.02 DEFINITIONS

The following words and terms, or pronouns used in their stead, shall, wherever they appear in this Contract, be construed as follows, unless different meaning is clear from the context:

(a)"City" shall mean the City of Tampa, Florida, represented by its Mayor and City Council, Party of the First Part, or such other City official as shall be duly empowered to act for the City on matters relating to this Contract.

(b)"Contractor" shall mean the Party of the Second Part hereto, whether corporation, firm or individual, or any combination thereof, and its, their, or his successors, personal representatives, executors, administrators, and assigns, and any person, firm or corporation who or which shall at any time be substituted in the place of the Party of the Second Part under this Contract.

(c)"Engineer" shall mean the Director of the Department or his duly authorized representative.

(d)"Consultant" shall mean the engineering or architectural firm or individual employed by the City to consult with and advise the City in the construction of the project.

(e)"Surety" shall mean any person, firm or corporation that has executed as Surety the Contractor's Performance Bond securing the performance of this Contact.

(f)"The Work" shall mean everything expressly or implied required to be furnished and done by the Contractor under the Contract, and shall include both Contract Work and Extra Work.

(g)"Contract Work" shall mean everything expressly or implied required to be furnished and done by the Contractor by any one or more of the Contract parts referred to in Article 1.01 hereof, except Extra Work, as hereinafter defined; it being understood that, in case of any inconsistency in or between any part or parts of this Contract, the Engineer shall determine which shall prevail.

(h)"Contract" or "Contract Documents" shall mean each of the various part of the Contract referred to in Article 1.01 hereof, both as a whole and severally.

(i)"Extra Work" shall mean work other than that required either expressly or implied by the contract in its present form.

(j)"Plans" shall mean only those drawings specifically referred to as such in these documents, or in any Addendum. Drawings issued after the execution of the Contract to explain further, or to illustrate, or to show changes in the work, will be known as "Supplementary Drawings" and shall be binding upon the Contractor with the same force as the Plans.

(k)"Specifications" shall mean all of the directions, requirements, and standards of performance applying to the work, as hereinafter detailed and designated as such, or which may be issued in an addendum.

(l)"Addendum or Addenda" shall mean the additional contract provisions issued in writing prior to the receipt of bids.

(m)"Notice" shall mean written notice. Notice shall be served upon the Contractor, either personally or by leaving the said notice at his residence or with any employee found on the work, or addressed to the Contractor at the residence or place of business given in his proposal and deposited in a postpaid wrapper in any post office box regularly maintained by the United States Post Office.

(n)"Project" shall mean the entire improvement package or related work. The "project" may consist of several different, but related, contracts.

(o)"Site" shall mean, and be limited to, the area upon or in which the Contractor's operations are carried on and such other appropriate areas as may be designed as such by the Engineer.

(p)"Subcontractor" shall mean any person, firm, or corporation, other than employees of the Contractor, who or which contracts with the Contractor to furnish, or actually furnishes labor, or labor and materials, or labor and equipment or labor, materials, and equipment at the site.

(q)Whenever in the Contract the words "directed", "required", "permitted", "ordered", "designated", "prescribed", and words of like import are used, they shall imply the direction, requirement, permission, order, designation, or prescription of the Engineer; and "approved", "acceptable", "satisfactory", "in the judgement of", and words of like import shall mean approved by, or acceptable to, or satisfactory to, or in the judgment of the Engineer.

(r)Whenever in the Contract the word "day" is used, it shall mean calendar day.

(s)"Final Acceptance" shall mean acceptance of the

work as evidenced by an official resolution of the City. Such acceptance shall be deemed to have taken place only if and when an approving resolution has been adopted by the City Council. The final acceptance shall be signed only after the City has assured itself by tests, inspection, or otherwise, that all of the provisions of the Contract have been carried out to its satisfaction.

(t)"Eastern Standard Time" shall be construed as the time being observed in the City on the day proposals are received or other documents issued or signed.

SECTION 2
POWERS OF THE CITY'S REPRESENTATIVES

ARTICLE 2.01 THE ENGINEER

It is covenanted and agreed that the Engineer, in addition to those matters elsewhere herein expressly made subject to his determination, direction, or approval, shall have the power, subject to such express provisions and limitations herein contained as are not in conflict herewith, and subject to review by the Mayor and City Council:

(a)To monitor the performance of the work.

(b)To determine the amount, kind, quality, sequence, and location of the work to be paid for hereunder and, when completed, to measure such work for payment.

(c)To determine all questions of an engineering character in relation to the work, to interpret the Plans, Specifications and Addenda.

(d)To determine how the work of this Contract shall be coordinated with the work of other contractors engaged simultaneously on this project.

(e)To make minor changes in the work as he deems necessary, provided such changes do not result in a net increase in the cost to the City or to the Contractor of the work to be done under the Contract.

(f)To amplify the Plans, add explanatory information and furnish additional Specifications and Drawings consistent with the intent of the Contract Documents.

The power of the Engineer shall not be limited to the foregoing enumeration, for it is the intent of this Contract that all of the work shall be subject to his determinations and approval, except where the determination or approval of someone other than the Engineer is expressly called for herein and except as subject to review by the Mayor and City Council. All orders of the Engineer requiring the Contractor to perform work as Contract work shall be promptly obeyed by the Contractor.

The Engineer shall not, however, have the power to issue an extra work order, and the performance of such work on the order of the Engineer without previously obtaining written confirmation thereof from the Mayor in accordance with Article 7.02 hereof may constitute a waiver of any right to extra compensation therefor. The Contractor is warned that the Engineer has no power to change the terms and provisions of this Contract, except minor changes where such change results in no net increase in the Contract Price.

ARTICLE 2.02 DIRECTOR

The Director of the Department in addition to those matters expressly made subject to his determination, direction or approval in his capacity as "Engineer", shall also have the power:

(a)To review any and all questions in relation to this Contract and its performance, except as herein otherwise specifically provided, and his determination upon such review shall be final and conclusive upon the Contractor.

(b)With the approval of the Mayor and City Council to authorize modifications or changes in the Contract so as to require: (1) the performance of extra work, or (2) the omission of Contract work whenever he deems it in the interest of the City to do so, or both.

(c)To suspend the whole or any part of the work whenever, in his judgment, such suspension is required: (1) in the interest of the City generally, or (2) to coordinate the work of the various Contractors engaged on this project, or (3) to expedite the completion of the entire project, even though the completion of this particular Contract may be thereby delayed, <u>without compensation to the Contractor for such suspension other than extending the time for the completion of the work, as much as it may have been, in the opinion of the City, delayed by such a suspension.</u>

(d)If, before the final acceptance of all the work contemplated herein, it shall be deemed necessary to take over, use, occupy, or operate any part of the completed or partly completed work, the Engineer shall have the right to do so and the Contractor will not, in any way, interfere with or object to the use, occupation, or operation of such work by the City after receipt of notice in writing from the Engineer that such work or part thereof will be used by the City on and after the date specified in such notice. Such taking over, use, occupancy or operation of any part of the completed or partially completed work shall not constitute final acceptance or approval of any such part of the work.

ARTICLE 2.03 NO ESTOPPEL

The City shall not, nor shall any department, officer, agent, or employee thereof, be bound, precluded, or estopped by any determination, decision, acceptance, return, certificate, or payment made or given under or in connection with this Contract by any officer, agent or employee of the City at any time either before or after final completion and acceptance of the work and payment therefor: (a) from showing the true and correct classification, amount, quality, or character of the work done, or that any determination, decision, acceptance, return certificate or payment is untrue, incorrect or improperly made in any particular, or that the work or any part thereof does not in fact conform to the requirements of the Contract Documents, and (b) from demanding and recovering from the Contractor any overpayments made to him or such damages as it may sustain by reason his failure to comply with the requirements of the Contract of Documents, or both.

ARTICLE 2.04 NO WAIVER OF RIGHTS

Neither the inspection, nor any order, measurements or certificate of the City or its employees, officers, or agents, nor by any order of the City for payment of money, nor any money, nor payments for or acceptance of the whole or any part of the work by the City, nor any extension of time, nor any changes in the Contract, Specifications or Plans, nor any possession by the City or its employees shall operate as a

waiver of any provisions of this Contract, nor any power herein provided nor shall any waiver of any breach of this Contract be held as a waiver of any other subsequent breach.

Any remedy provided in this Contract shall be taken and construed as cumulative, namely, in addition to each and every other suit, action, or legal proceeding. The City shall be entitled as of right to an injunction against any breach of the provisions of this Contract.

SECTION 3
PERFORMANCE OF WORK

ARTICLE 3.01 CONTRACTOR'S RESPONSIBILITY

The Contractor shall do all the work and furnish, at his own cost and expense, all labor, materials, equipment, and other facilities, except as herein otherwise provided, as may be necessary and proper for performing and completing the work under this Contract. The Contractor shall be responsible for the entire work until completed and finally accepted by the City.

The work shall be performed in accordance with the true intent and meaning of the Contract Documents. Unless otherwise expressly provided, the work must be performed in accordance with the best modern practice, with materials as specified and workmanship of the highest quality, all as determined by and entirely to the satisfaction of the Engineer.

Unless otherwise expressly provided, the means and methods of construction shall be such as the Contractor may choose, subject, however, to the approval of the Engineer. Only adequate and safe procedure, methods, structures and equipment shall be used. The Engineer's approval or the Engineer's failure to exercise his right thereon shall not relieve the Contractor of obligations to accomplish the result intended by the Contract, nor shall such create a cause of action for damages.

ARTICLE 3.02 COMPLIANCE WITH LAWS

The Contractor must comply with all local, State and Federal laws, rules, ordinances and regulations applicable to this Contract and to the work done hereunder, and must obtain, at his own expense, all permits, licenses or other authorization necessary for the prosecution of the work.

No work shall be performed under this Contract on Sundays, legal holidays or after regular working hours without the express permission of the Engineer. Where such permission is granted, the Engineer may require that such work be performed without additional expense to the City.

ARTICLE 3.03 INSPECTION

During the progress of the work and up to the date of final acceptance, the Contractor shall, at all times, afford the representatives of the City, the Florida Department of Environmental Regulation, and if applicable, the Federal Environmental Protection Agency and the Federal Department of Labor every reasonable, safe and proper facility for inspecting the work done or being done at the site. The inspection of any work shall not relieve the Contractor of any of his obligations to perform proper and satisfactory work as herein specified. Finished or unfinished work found not to be in strict accordance with the Contract shall be replaced as directed by the Engineer, even though such work may have been previously approved and payment made therefor.

The City shall have the right to reject materials and workmanship which are defective or require their correction. Rejected work and materials must be promptly removed from the site, which must at all times be kept in a reasonably clean and neat condition.

Failure or neglect on the part of the City to condemn or reject bad or inferior work or materials shall not be construed to imply an acceptance of such work or materials, if it becomes evident at any time prior to the final acceptance of the work by the City. Neither shall it be construed as barring the City at any subsequent time from the recovery of damages of such a sum of money as may be needed to build anew all portions of the work in which inferior work or improper materials were used, wherever found.

Should it be considered necessary or advisable by the City at any time before final acceptance of the entire work to make examinations of work already completed, by removing or tearing out all or portions of such work, the Contractor shall, on request, promptly furnish all necessary facilities, labor, and material for that purpose. If such work is found to be defective in any material respect, due to the fault of the Contractor or his subcontractors, he shall defray all expenses of such examination and of satisfactory reconstruction. If, however, such work is found to meet the requirements of the Contract, the cost of examination and restoration of the work shall be considered an item of extra work to be paid for in accordance with the provisions of Article 7.02 hereof.

ARTICLE 3.04 PROTECTION

During performance and until final acceptance, the Contractor shall be under an absolute obligation to protect the finished and unfinished work against any damage, loss, or injury. The Contractor shall take proper precaution to protect the finished work from loss or damage, pending completion and the final acceptance of all the work included in the entire Contract, provided that such precaution shall not relieve the Contractor from any and all liability and responsibility for loss or damage to the work occurring before final acceptance by the City. Such loss or damage shall be at the risk of and borne by the Contractor, whether arising from acts or omissions of the Contractor or others. In the event of any such loss or damage, the Contractor shall forthwith repair, replace, and make good the work without extension of time therefor, except as may be otherwise provided herein.

The provisions of this Article shall not be deemed to create any new right of action in favor of third parties against the Contractor or the City.

ARTICLE 3.05 PRESERVATION OF PROPERTY

The Contractor shall preserve from damage all property along the line of the work, or which is in the vicinity of or is in anywise affected by the work, the removal or destruction of which is not called for by the Plans. This applies, but is not limited, to the public utilities, trees, lawn areas, building monuments, fences, pipe and underground structures, public streets (except natural wear and tear of streets resulting from legitimate use thereof by the Contractor), and wherever such property is damaged due to the activities of the Contractor, it shall be immediately restored to its original condition by the Contractor and at his own expense.

In case of failure on the part of the Contractor to restore such property, or make good such damage or injury, the City may, upon forty-eight (48) hour written notice, proceed to repair, rebuild, or otherwise restore such property as may be deemed necessary, and the cost thereof will be deducted from any monies due or which may become due the Contractor under this Contract. Nothing in this clause shall prevent the Contractor from receiving proper compensation for the removal, damage, or replacement of any public or private property not shown on the Plans, when this is made necessary by alteration of grade or alignment authorized by the Engineer, provided that such property has not been damaged through fault of the Contractor, his employees or agents.

ARTICLE 3.06 BOUNDARIES
The Contractor shall confine his equipment, apparatus, the storage of materials, supplies and apparatus of his workmen to the limits indicated on the plans, by law, ordinances, permits or direction of the Engineer.

ARTICLE 3.07 SAFETY AND HEALTH REGULATIONS
The Contractor shall comply with the Department of Labor Safety and Health Regulations for construction promulgated under the Occupational Safety and Health Act of 1970 (PL 91- 596) and under Section 107 of the Contract Work Hours and Safety Standards Act (PL91-54).

ARTICLE 3.08 TAXES
All taxes of any kind and character payable on account of the work done and materials furnished under this Contract shall be paid by the Contractor and shall be deemed to have been included in his bid. The laws of the State of Florida provide that sales and use taxes are payable by the Contractor upon the tangible personal property incorporated in the work and such taxes shall be paid by the Contractor and shall be deemed to have been included in his bid.

ARTICLE 3.09 ENVIRONMENTAL CONSIDERATIONS
The Contractor, in the performance of the work under this Contract, shall comply with all Local, State and Federal laws, statutes, ordinances, rules and regulations applicable to protection of the environment; and, in the event he violates any of the provisions of same, he shall be answerable to the Local, State and Federal agencies designated by law to protect the environment. In the event the City receives, from any of the environmental agencies, a citation which is occasioned by an act or omission of the Contractor or his subcontractor or any officers, employees or agents of either, it is understood and agreed that the Contractor shall automatically become a party-respondent under said citation; and the City immediately shall notify the Contractor and provide him with a copy of said citation.

The Contractor shall comply with the requirements of the citation and correct the offending conditions(s) within the time stated in said citation and further shall be held fully responsible for all fines and/or penalties.

SECTION 4
TIME PROVISIONS

ARTICLE 4.01 TIME OF START AND COMPLETION
The Contractor must commence work within thirty (30) days subsequent to the date of the receipt of the "Notice to Proceed" by the City unless otherwise provided in the Specific Provisions and Special Instructions. Time being of the essence of this Contract, the Contractor shall thereafter prosecute the work diligently, using such means and methods of construction as well as secure its full completion in accordance with the requirements of the Contract Documents no later than the date specified therefor, or on the date to which the time for completion may be extended.

The Contractor must complete the work covered by this Contract in the number of consecutive calendar days set forth in the Instructions to Bidders, unless the date of completion is extended pursuant to the provisions of Article 4.05 hereof. The period for performance shall start from the date of signing of this Agreement by the City.

The actual date of completion will be established after a final inspection as provided in Article 4.07 hereof.

ARTICLE 4.02 PROGRESS SCHEDULE
To enable the work to be laid out and prosecuted in an orderly and expeditious manner, the Contractor shall submit to the Engineer a proposed progress schedule within fifteen (15) days after the award of this Contract.

The schedule shall state the Contract starting date, time for completion and date of completion and shall show the anticipated time of starting and completion of each of the various operations to be performed under this Contract, together with all necessary and appropriate information regarding sequence and correlation of work and an estimated time required for the delivery of all materials and equipment required for the work. The proposed schedule shall be revised as directed by the Engineer until finally approved by him, and, after such approval, shall be strictly adhered to by the Contractor. The approved progress schedule may be changed only with the written permission of the Engineer.

If the Contractor shall fail to adhere to the approved progress schedule or the schedule as revised, he shall promptly adopt such other or additional means and methods of construction as will make up for the time lost, and will assure completion in accordance with the contract time.

ARTICLE 4.03 APPROVAL REQUESTS
From time to time, as the work progresses and in the sequence indicated by the approved schedule, the Contractor must submit to the Engineer a specific request, in writing, for each item of information or approval required of him by the Contract. These requests must be submitted sufficiently in advance of the date upon which the information or approval is actually required by the Contractor to allow for the time the Engineer may take to act upon such submissions or resubmissions. The Contractor shall not have any right to an extension of time on account of delays due to his failure to submit his requests for the required information or the required approval in accordance with these requirements.

ARTICLE 4.04 COORDINATION WITH OTHER CONTRACTORS
During progress of the work, other Contractors may be engaged in performing other work on this project or on other projects on the site. In that event, the Contractor shall coordinate the work to be done hereunder with the work of such other Contractors in such manner as the Engineer may direct.

ARTICLE 4.05 EXTENSION OF TIME
If such an application is made, the Contractor shall be entitled to an extension of time for delay in completion of the work should the Contractor be obstructed or delayed in the commencement, prosecution or completion of any part of said work by any act or delay of the City, or by acts or omissions of other Contractors on this project, or by a riot, insurrection, war, pestilence, acts of public authorities, fire, lightning, hurricanes, earthquakes, tornadoes, floods, extremely abnormal and excessive inclement weather as indicated by the records of the local weather bureau for a five-year period preceding the date of the Contract, or by strikes, or other causes, which causes of delay mentioned in this Article, in the opinion of the City, are entirely beyond the expectation and control of the Contractor.

The Contractor shall, however, be entitled to an extension of time for such causes only for the number of days of delay which the City may determine to be due solely to such causes and only to the extent that such occurrences actually delay the completion of the project and then only if the Contractor shall have strictly complied with all of the requirements of Articles 4.01, 4.02, 4.03 and 4.04 hereof. It is hereby understood that the determination by the Engineer as to the order and sequence of the work shall not in itself constitute a basis for extension of time.

The determination made by the City on an application for an extension of time shall be binding and conclusive on the Contractor.

Delays caused by failure of the Contractor's materialmen, manufacturers, and dealers to furnish approved working drawings, materials, fixtures, equipment, appliances, or other fittings on time or failure of subcontractors to perform their work shall not constitute a basis of extension of time.

The Contractor agrees to make no claim for damages for delay in the performance of this Contract occasioned by any act or omission to act of the City or any of its representatives or because of any injunction which may be brought against the City or its representatives and agrees that any such claim shall be fully compensated for by an extension of time to complete performance of the work as provided herein.

ARTICLE 4.06 LIQUIDATED DAMAGES
It is mutually agreed between the parties that time is the essence of this Contract and that there will be on the part of the City considerable monetary damage in the event the Contractor should fail to complete the work within the time fixed for completion in the Contract or within the time to which such completion may have been extended.

The amount per day set forth in the Instructions to Bidders is hereby agreed upon as the liquidated damages for each and every calendar day that the time consumed in completing the work under this Contract exceeds the time allowed.

This amount shall, in no event, be considered as a penalty or otherwise than as the liquidated and adjusted damages to the City because of the delay and the Contractor and his Surety agree that the stated sum per day for each such day of delay shall be deducted and retained out of the monies which may become due hereunder and if not so deductible, the Contractor and his Surety shall be liable therefor.

ARTICLE 4.07 FINAL INSPECTION
When the work has been completed in accordance with the requirements of the Contract and final cleaning up performed, a date for final inspection of the work by the Engineer shall be set by the Contractor in a written request therefor, which date shall be not less than ten (10) days after the date of such request. The work will be deemed complete as of the date so set by the Contractor if, upon such inspection, the Engineer determines that no further work remains to be done at the site.

If such inspection reveals interms of work still to be performed, however, the Contractor shall promptly perform them and then request a reinspection. If, upon such inspection, the Engineer determines that the work is complete, the date of final completion shall be deemed to be the last day of such reinspection.

SECTION 5
SUBCONTRACTS AND ASSIGNMENTS

ARTICLE 5.01 LIMITATIONS AND CONSENT
The Contractor shall not assign, transfer, convey, sublet or otherwise dispose of this Contract or of his right, title, or interest therein, or his power to execute such Contract, or to assign any monies due or to become due thereunder to any other person, firm or corporation unless the previous written consent of the City shall first be obtained thereto and the giving of any such consent to a particular subcontract or assignment shall not dispense with the necessity of such consent to any further or other assignment.

Before making any subcontract, the Contractor must submit a

written statement to the Engineer, giving the name and address of the proposed contractor, the portion of the work and materials which he is to perform and furnish and any other information tending to prove that the proposed subcontractor has the necessary facilities, skill, integrity, past experience and financial resources to perform the work in accordance with the terms and conditions of this Contract.

If the City finds that the proposed subcontractor is qualified, the Contractor will be notified in writing. The City may revoke approval of any subcontractor when such subcontractor evidences an unwillingness or inability to perform his work in strict accordance with these Contract Documents. Notice of such revocation of approval will be given in writing to the Contractor.

The Contractor will promptly, upon request, file with the City a conformed copy of the subcontract. The Contractor shall cause appropriate provisions to be inserted in all subcontracts relative to the work to bind subcontractors to the Contractor by the terms of these Contract Documents, insofar as applicable to the work of subcontractors, and to give the Contractor the same power as regards terminating any subcontracts that the City may exercise over the Contractor under provisions of these Contract Documents.

The Contractor shall be required to perform with his own forces at least twenty-five (25) percent of the work, unless written consent to subcontract a greater percentage of the work is first obtained from the City.

ARTICLE 5.02 RESPONSIBILITY
The approval by the City of a subcontractor shall not relieve the Contractor of any of his responsibilities, duties, and liabilities hereunder. The Contractor shall be solely responsible to the City for the acts or defaults or omissions of his subcontractor and of such subcontractor's officers, agents, and employees, each of whom shall for all purposes be deemed to be the agent or employee of the Contractor. Nothing contained in the Contract Documents shall create any contractual relationship between any subcontractor and the City.

SECTION 6
SECURITY AND GUARANTY

ARTICLE 6.01 CONTRACT SECURITY
The Contractor shall execute and deliver to the City a Performance Bond on the form as provided herein, in an amount at least equal to one hundred (100) percent of the full Contract price, such Bond to be executed by a surety company acceptable to the City. The surety on such Performance Bond shall be a surety company duly authorized to do business in the State of Florida, and the Bond shall be issued or countersigned by a local resident producing agent of such surety company who is a resident of the State of Florida, regularly commissioned and licensed in said State, and satisfactory evidence of the authority of the person or persons executing such Bond shall be submitted with the Bond. The Performance Bond shall serve as security for the faithful performance of this Contract, including maintenance and guaranty provisions, and for the payment of all persons performing labor and furnishing materials in connection with the Contract. The premiums on the Performance Bond shall be paid by the Contractor.

If, at any time, the City shall become dissatisfied with any surety or sureties then upon the Performance Bond, or if for any other reason such bond shall cease to be adequate security for the City, the Contractor shall, within five days after notice so to do, substitute an acceptable Bond in such form and sum and signed by such other sureties as may be satisfactory to the City. The premiums on such Bond shall be paid by the Contractor. No further partial payments shall be deemed due or shall be made until the new sureties have qualified.

ARTICLE 6.02 CONTRACTORS INSURANCE
Insurance required shall be as indicated on Special Instructions pages beginning with "INS-1"

ARTICLE 6.03 AGAINST CLAIMS AND LIENS
The City may withhold from the Contractor as much as any approved payments to him as may, in the opinion of the City, be necessary to secure (a) just claims of any persons supplying labor or materials to the Contractor or any of his subcontractors for the work then due and unpaid; (b) loss due to defective work not remedied, or (c) liability, damage, or loss due to injury to persons or damages to the work or property of other contractors, subcontractors, or others, caused by the act or neglect of the Contractor or of any of his subcontractors. The City shall have the right, as agent for the Contractor, to apply any such amounts so withheld in such manner as the City may deem proper to satisfy such claims or to secure such protection. Such application of such money shall be deemed payments for the account of the Contractor.

ARTICLE 6.04 MAINTENANCE AND GUARANTY
The Contractor hereby guarantees all the work furnished under this Contract against any defects in workmanship and materials for a period of one year following the date of final acceptance of the work by the City. Under this guarantee, the Contractor hereby agrees to make good, without delay, at his own expense, any failure of any part of the work due to faulty materials or manufacture, construction, or installation, or the failure of any equipment to perform satisfactorily all the work put upon it within the limits of the Contract Documents, and further, shall make good any damage to any part of the work caused by such failure. It is hereby agreed that the Performance Bond shall fully cover all guarantees contained in this Article.
It is also agreed that all warranties, expressed or implied, inure to the benefit of the City and are enforceable by the City.

SECTION 7
CHANGES

ARTICLE 7.01 MINOR CHANGES
The City reserves the right to make such additions, deductions, or changes to this Contract from time to time as

it deems necessary and in a manner not materially affecting the substance thereof or materially changing the price to be paid in order to carry out and complete more fully and perfectly the work herein agreed to be done and performed. This Contract shall in no way be invalidated by any such additions, deductions, or changes, and no claim by the Contractor shall be made for any loss of anticipated profits thereby.

Construction conditions may require that minor changes be made in the location and installation of the work and equipment to be furnished and other work to be performed hereunder, and the Contractor when ordered by the Engineer, shall make such adjustments and changes in said locations and work as may be necessary, without additional cost to the City, provided such adjustments and changes do not alter the character, quantity of cost of the work as a whole, and provided further that Plans and Specifications showing such adjustments and changes are furnished to the Contractor by the City within a reasonable time before any work involving such adjustment and changes is begun. The Engineer shall be the sole judge of what constitutes a minor change for which no additional compensation shall be allowed.

ARTICLE 7.02 EXTRA WORK

The City may at any time by a written order and without notice to the sureties require the performance of such extra work as it may find necessary or desirable. An order for extra work shall be valid only if issued in writing and signed by the Mayor and the work so ordered must be performed by the Contractor.

The amount of compensation to be paid to the Contractor for any extra work as so ordered shall be determined as follows:

(a)By such applicable unit prices, if any, as are set forth in the Proposal; or

(b)If no such unit prices are set forth then by a lump sum or other unit prices mutually agreed upon by the City and the Contractor; or

(c)If no such unit prices are set forth in the Proposal and if the parties cannot agree upon a lump sum or other unit prices then by the actual net cost in money to the Contractor of the extra work performed, which cost shall be determined as follows:

(1) For all labor and foreman in direct charge of the authorized operations, the Contractor shall receive the current local rate of wages to be agreed upon, in writing, before starting such work for each hour that said labor and foremen are actually engaged thereon, to which shall be added an amount equal to 25 percent of the sum thereof which shall be considered and accepted as full compensation for general supervision, FICA taxes, contributions under the Florida Unemployment Compensation Act, insurance, bond, subcontractor's profit and overhead, the furnishing of small tools and miscellaneous equipment used, such as picks, shovels, hand pumps, and similar items.

(2) For all materials used, the Contractor shall receive the actual cost of such materials delivered at the site or previously approved delivery point as established by original receipted bills. No percentage shall be added to this cost.

(3) For special equipment and machinery such as power-driven pumps, concrete mixers, trucks, and tractors, or other equipment, required for the economical performance of the authorized work, the Contractor shall receive payment based on the average local area rental price for each item of equipment and the actual time of its use on the work. No percentage shall be added to this sum.

(4) Records of extra work done under this procedure shall be reviewed at the end of each day by the Contractor or his representative and the Engineer. Duplicate copies of accepted records shall be made and signed by both Contractor or his representative and the Engineer, and one copy retained by each.

Request for payment for approved and duly authorized extra work shall be submitted in the same form as Contract work or in the case of work performed under paragraph (c) (1) above upon a certified statement supported by receipted bills. Such statement shall be submitted for the current Contract payment for the month in which the work was done.

ARTICLE 7.03 DISPUTED WORK

If the Contractor is of the opinion that any work required, necessitated, or ordered violates the terms and provisions of this Contract, he must promptly notify the Engineer, in writing, of his contentions with respect thereto and request a final determination thereof. If the Engineer determines that the work in question is Contract work and not extra work or that the order complained of is proper, he will direct the Contractor to proceed and the Contractor shall promptly comply. In order, however, to reserve his right to claim compensation for such work or damages resulting from such compliance, the Contractor must, within five (5) days after receiving notice of the Engineer's determination and direction, notify the City in writing that the work is being performed or that the determination and direction is being complied with under protest. Failure of the Contractor to notify shall be deemed as a waiver of claim for extra compensation or damages therefor.

Before final acceptance by the City, all matters of dispute must be adjusted to the mutual satisfaction of the parties thereto. Final determinations and decisions, in case any questions shall arise, shall constitute a condition precedent to the right of the Contractor to receive the money therefor until the matter in question has been adjusted.

ARTICLE 7.04 OMITTED WORK

The City may at any time by a written order and without notice to the sureties require the omission of such Contract work as it may find necessary or desirable.

An order for omission of work shall be valid only if signed by the Mayor and the work so ordered must be omitted by the Contractor. The amount by which the Contract price shall be reduced shall be determined as follows:

(a) By such applicable unit prices, if any, as are set forth in the Contract; or

(b) By the appropriate lump sum price set forth in the Contract; or

(c) By the fair and reasonable estimated cost to the City

of such omitted work as determined by the Engineer and approved by the City.

SECTION 8
CONTRACTOR'S EMPLOYEES

ARTICLE 8.01 CHARACTER AND COMPETENCY

The Contractor and his subcontractors shall employ upon all parts of the work herein contracted for only competent, skillful, and trustworthy workers. Should the Engineer at any time give notice, in writing, to the Contractor or his duly authorized representative on the work that any employee in his opinion is incompetent, unfaithful, disorderly, careless, unobservant of instructions, or in any way a detriment to the satisfactory progress of the work, such employee shall immediately be dismissed and not again allowed upon the site.

ARTICLE 8.02 SUPERINTENDENCE

The Contractor shall give his personal supervision to the faithful prosecution of the work and in case of his absence shall have a competent, experienced, and reliable supervisor or superintendent, acceptable to the Engineer on the site who shall follow without delay all instructions of the Engineer in the prosecution and completion of the work and every part thereof, in full authority to supply workers, material, and equipment immediately. He shall keep on hand at all times copies of the Contract Documents.

ARTICLE 8.03 EMPLOYMENT OPPORTUNITIES

The Contractor shall, in the performance of the work required to be done under this Contract, employ all workers without discrimination regarding race, creed, color, sex or national origin and must not maintain or provide facilities that are segregated on the basis of race, color, creed or national origin.

ARTICLE 8.04 RATES OF WAGES

On federally assisted projects, the rates of wages to be paid under this Contract shall not be less than the rates of wages set forth in Section 12 of this Agreement.

On other projects, no wage rate determination is included. Florida's Prevailing Wage Law (Section 215.19, Florida Statutes) was repealed effective April 25, 1979.

ARTICLE 8.05 PAYROLL REPORTS

The Contractor and each subcontractor shall, if requested to do so, furnish to the Engineer a duly certified copy of his payroll and also any other information required by the Engineer to satisfy him that the provisions of the law as to the hours of employment and rate of wages are being observed.

Payrolls shall be prepared in accordance with instructions furnished by the City and on approved forms. The Contractor shall not carry on his payroll any persons not employed by him. Subcontractor's employees shall be carried only on the payrolls of the employing subcontractor.

SECTION 9
CONTRACTOR'S DEFAULT

ARTICLE 9.01 CITY'S RIGHT AND NOTICE

It is mutually agreed that: (a) if the Contractor fails to begin work when required to do so, or (b) if at any time during the progress of the work it shall appear to the Engineer that the Contractor is not prosecuting the work with reasonable speed, or is delaying the work unreasonably and unnecessarily, or (c) if the force of workmen or quality or quantity of material furnished are not sufficient to insure completion of the work within the specified time and in accordance with the Specifications hereto attached, or (d) if the Contractor shall fail to make prompt payments for materials or labor or to subcontractors for work performed under the Contract, or (e) if legal proceedings have been instituted by others than the City in such manner as to interfere with the progress of the work and may subject the City to peril of litigation or outside claims of (f) if the Contractor shall be adjudged a bankrupt or make an assignment for the benefit of creditors, or (g) if in any proceeding instituted by or against the Contractor an order shall be made or entered granting an extension of time of payment, composition, adjustment, modification, settlement or satisfaction of his debts or liabilities, or (h) if a receiver or trustee shall be appointed for the Contractor or the Contractor's property, or (i) if the Contract or any part thereof shall be sublet without the consent of the City being first obtained in writing, or (j) if this Contract or any right, monies, or claim thereunder shall be assigned by the Contractor, otherwise than as herein specified, or (k) if the Contractor shall fail in any manner of substance to observe the provisions of this Contract, or (l) if any of the work, machinery, or equipment shall be defective, and shall not be replaced as herein provided, or (m) if the work to be done under this Contract shall be abandoned, then such fact or conditions shall be certified by the Engineer and thereupon the City without prejudice to any other rights or remedies of the City, shall have the right to declare the Contractor in default and so notify the Contractor by a written notice, setting forth the ground or grounds upon which such default is declared and the Contractor must discontinue the work, either as a portion of the work or the whole thereof, as directed.

ARTICLE 9.02 CONTRACTOR'S DUTY UPON DEFAULT

Upon receipt of notice that his Contract is in default, the Contractor shall immediately discontinue all further operations on the work or such part thereof, and shall immediately quit the site or such part thereof, leaving untouched all plant, materials, equipment, tools, and supplies.

ARTICLE 9.03 COMPLETION OF DEFAULTED WORK

The City, after declaring the Contractor in default, may then have the work completed or the defective equipment or machinery replaced or anything else done to complete the work in strict accordance with the Contract Documents by such means and in such manner, by Contract with or without public letting, or otherwise, as it may deem advisable,

utilizing for such purpose without additional cost to the City such of the Contractor's plant, materials, equipment, tools, and supplies remaining on the site, and also such subcontractors as it may deem advisable.

The City shall reimburse all parties, including itself, for the expense of such completion, including liquidated damages, if any, and the cost of reletting. The City shall deduct this expense from monies due or to become due to the Contractor under this Contract, or any part thereof, and in case such expense is more than the sum remaining unpaid of the original contract price, the Contractor and his sureties shall pay the amount of such deficiency to the City.

ARTICLE 9.04 PARTIAL DEFAULT
In case the City shall declare the Contractor in default as to a part of the work only, the Contractor shall discontinue such part, shall continue performing the remainder of the work in strict conformity with the terms of the Contract, and shall in no way hinder or interfere with any other contractor or person whom the City may engage to complete the work as to which the Contractor was declared in default.

SECTION 10
PAYMENTS

ARTICLE 10.01 PRICES
For the Contractor's complete performance of the work, the City will pay and the Contractor agrees to accept, subject to the terms and conditions hereof, the lump sum prices or unit prices in the Contractor's Proposal and the award made therein, plus the amount required to be paid for any extra work ordered under Article 7.02 hereof, less credit for any work omitted pursuant to Article 7.04 hereof. Under unit price items, the number of units actually required to complete the work under the Contract may be more than stated in the Proposal. The Contractor agrees that no claim will be made for any damages or for loss of profits because of a difference between the quantities of the various classes of work assumed and stated in the Proposal Form as a basis for comparing Proposals and the quantities of work actually performed.

The sum as awarded for any lump sum Contract or lump sum Contract Item shall represent payment in full for all of the various classes of work, including materials, equipment, and labor necessary or required to complete, in conformity with the Contract Document, the entire work shown, indicated or specified under the lump sum Contract or lump sum Contract Item.

The amount as awarded as a unit price for any unit price Contact Item shall represent payment in full for all the materials, equipment, and labor necessary to complete, in conformity with the Contract Documents, each unit of work shown, specified, or required under the said unit price Contract Item.

No payment other than the amount as awarded will be made for any class of work included in a lump sum Contract Item or a unit price Contract Item, unless specific provision is made therefor in the Contract Documents.

ARTICLE 10.02 SUBMISSION OF BID BREAKDOWN
Within fifteen (15) days after the execution of this Contract, the Contractor must submit to the Engineer in duplicate an acceptable breakdown of the lump sums and unit prices bid for items of the Contract, showing the various operations to be performed under the Contract, as described in the progress schedule required under Article 4.02 hereof, and the value of each of such operations, the total of such items to equal the total price bid. The Contractor shall also submit such other information relating to the bid prices as may be required and shall revise the bid breakdown as directed. Thereafter, the breakdown may be used for checking the Contractor's applications for partial payments hereunder but shall not be binding upon the City or the Engineer for any purpose whatsoever.

ARTICLE 10.03 REPORTS, RECORDS AND DATA
The Contractor shall furnish to the Engineer such schedules of quantities and costs, progress schedules, reports, invoices, delivery tickets, estimates, records, and other data as the Engineer may request concerning work performed or to be performed and the materials furnished under the Contract.

ARTICLE 10.04 PAYMENTS BY CONTRACTOR
The Contractor shall pay (a) for all transportation and utility services not later than the 20th day of the calendar month following that in which such services are rendered, (b) for all materials, tools, and equipment delivered at the site of the project, and the balance of the cost thereof not later than the 30th day following the completion of that part of the work in or on which such materials, tools, and equipment are incorporated or used, and (c) to each of his subcontractors, not later than the 5th day following each payment to the Contractor, the respective amounts allowed the Contractor on account of the work performed by his subcontractors, to the extent of each subcontractor's interest therein; and proof of such payments or releases therefor shall be submitted to the Engineer upon request.

ARTICLE 10.05 PARTIAL PAYMENTS
On or about the first of each month, the Contractor shall make and certify an estimate, on forms prescribed by the City, of the amount and fair value of the work done, and may apply for partial payment therefor. The Contractor shall revise the estimate as the Engineer may direct. When satisfactory progress has been made, and shows that the value of the work completed since the last payment exceeds one percent (1%) of the total Contract price in amount, the Engineer will issue a certificate that such work has been completed and the value thereof. The City will then issue a voucher to the Contractor in accordance with the following schedule:

FOR CONTRACT AMOUNTS UNDER $250,000
(A)In the amount of ninety percent (90%) of the value of the work completed as certified until construction is one hundred percent (100%) complete (operational or beneficial occupancy), the withheld amount may be reduced below ten percent (10%), at the Engineer's option, to only that amount necessary to assure completion.

FOR CONTRACT AMOUNTS OVER $250,000

(A)In the amount of ninety percent (90%) of the value of the work completed as certified until construction is fifty percent (50%) complete.

(B)When the dollar value, as determined by the Engineer, of satisfactorily completed work in place is greater than fifty percent (50%) of the original contract price, vouchers for partial payment will be issued by the City to the Contractor in the amount of one hundred percent (100%) of the value of the work, above 50%, completed as certified for that payment period.

(C)If the Contractor has performed satisfactorily and the work is substantially complete (operational or beneficial occupancy) the withheld amount may be reduced, at the Engineer's option, to only that amount necessary to assure completion.

In addition to the Conditions set forth in (A), (B), and (C) above, payments will always be less any sums that may be retained or deducted by the City under the terms of any of the contract documents and less any sums that may be retained to cover monetary guarantees for equipment, materials or progress performance.

Payment on estimates made on or about the first of the month may be expected on or about the 20th of the month.

Unless specified otherwise in the Contract Items, the delivered cost of equipment and nonperishable materials suitably stored at the site of the work and tested for adequacy may be included in the Contractor's application for partial payment provided, however, that the Contractor shall furnish evidence satisfactory to the City that the Contractor is the unconditional owner and in possession of such materials or equipment. The amount to be paid will be 90 percent of the invoice cost to the Contractor which cost shall be supported by receipted bills within 30 days of the date of payment by the City to the Contractor. Such payment shall not relieve the Contractor from full responsibility for completion of the work and for protection of such materials and equipment until incorporated in the work in a permanent manner as required by the Contract Documents.

Before any payment will be made under this Contract, the Contractor and every subcontractor, if required, shall deliver to the Engineer a written, verified statement, in satisfactory form, showing in detail all amounts then due and unpaid by such Contractor or subcontractor to all laborers, workmen, and mechanics, employed by him under the Contract for the performance of the work at the site thereof, for daily or weekly wages, or to other persons for materials, equipment, or supplies delivered at the site of the work during the period covered by the payment under consideration.

ARTICLE 10.06 FINAL PAYMENT

Under determination of satisfactory completion of the work under this Contract as provided in Article 4.07 hereof, the Engineer will prepare the final estimate showing the value of the completed work. This estimate will be prepared within 30 days after the date of completion or as soon thereafter as the necessary measurements and computations can be made. All prior certificates and estimates, being approximate only, are subject to correction in the final estimate and payment.

When the final estimate has been prepared and certified by Engineer, he will submit to the Mayor and City Council the final certificate stating that the work has been completed and the amount based on the final estimate remaining due to the Contractor. The City will then accept the work as fully completed and will, not later than 30 days after the final acceptance, as defined in Article 1.02, of the work done under this Contract, pay the Contractor the entire amount so found due thereunder after deduction of all previous payments and all percentages and amounts to be kept and retained under provisions of this Contract; provided, however, and it is understood and agreed that, as a precedent to receiving final payment, the Contractor shall submit to the City a sworn affidavit that all bills for labor, service, materials, and subcontractors have been paid and that there are no suits pending in connection with this work. The City, at its option, may permit the Contractor to execute a separate surety bond in a form satisfactory to the City. The surety bond shall be in the full amount of the suit or suits.

Neither the final payment nor any part of the retained percentage shall be paid until the Contractor, if required, shall furnish the City with a complete release from any should remain unsatisfied after all payments are made, the Contractor shall refund to the City all monies which the City may be compelled to pay in discharging such claim, including incidental costs and attorney's fees.

ARTICLE 10.07 ACCEPTANCE OF FINAL PAYMENT

The acceptance by the Contractor, or by anyone claiming by or through him, of the final payment shall operate as and shall be a release to the City and every officer and agent thereof from any and all claims and liability to the Contractor for anything done or furnished in connection with the work or project and for any act or neglect of the Contractor or of any others relating to or affecting the work. No payment, however, final or otherwise, shall operate to release the Contractor or his sureties from any obligations under this Contract or the Performance Bond.

SECTION 11
MISCELLANEOUS PROVISIONS

ARTICLE 11.01 CONTRACTOR'S WARRANTIES

In consideration of, and to induce the award of this contract to him, the Contractor represents and warrants:

(a)That he is not in arrears to the City upon debt or contract, and he is not a defaulter, as surety, contractor, or otherwise.

(b)That he is financially solvent and sufficiently experienced and competent to perform the work.

(c)That the work can be performed as called for by the Contract Documents.

(d)That the facts stated in his proposal and the information given by him are true and correct in all respects.

(e)That he is fully informed regarding all the conditions affecting the work to be done and labor and materials to be

furnished for the completion of this Contract, and that his information was secured by personal investigation and research.

ARTICLE 11.02 PATENTED DEVICES, MATERIAL AND PROCESSES

It is mutually understood and agreed that Contract prices include all royalties and costs arising from patents, trademarks, and copyrights in any way involved in the work. Whenever the Contractor is required or desires to use any design, device, material, or process covered by letters of patent or copyright, the Contractor shall indemnify and save harmless the City, its officers, agents and employees from any and all claims for infringement by reason of the use of any such patented design, device, tool, material, equipment, or process, to be performed under the Contract, and shall indemnify the said City, its officers, agents, and employees for any costs, expenses, and damages which may be incurred by reason of such infringement at any time during the prosecution or after completion of the work.

ARTICLE 11.03 SUITS AT LAW

In case any action at law or suit in equity may or shall be brought against the City or any of its officers, agents, or employees for or on account of the failure, omission, or neglect of the Contractor or his subcontractors, employees, or agents, to do or perform any of the covenants, acts, matters, or things by this Contract undertaken to be done or performed by the Contractor of his subcontractors, employees, or agents, or from any injuries done to property or persons and caused by the negligence or alleged negligence of the Contractor of his subcontractors, employees, or agents, or in any other manner arising out of the performance of this Contract, then the Contractor shall immediately assume and take charge of the defense of such actions or suits in like manner and to all intents and purposes as if said actions or suits have been brought directly against the Contractor, and the Contractor shall also indemnity and save harmless the City, its officers, agents, and employees from any and all loss, cost or damage whatever arising out of such actions or suits, in like manner and to all intents and purposes as if said actions or suits have been brought directly against the Contractor.

The Contractor shall and does hereby assume all liability for and agrees to indemnify the City or its Engineer against any or all loss, costs, damages, and liability for any or by reason of any lien, claims or demands, either for materials purchased or for work performed by laborers, mechanics, and others and from any damages, costs, actions, or causes of action and judgement arising from injuries sustained by mechanics, laborers, or other persons by reason of accidents or otherwise, whether caused by the carelessness or inefficiency or neglect of said Contractor, his subcontractors, agents, employees, workmen or otherwise.

ARTICLE 11.04 CLAIMS FOR DAMAGES

If the Contractor shall claim compensation for any damage sustained, other than for extra or disputed work covered by Article 7.02 and 7.03 hereof, by reason of any act or omission of the City, its agents, or any persons, he shall, within five days after sustaining such damage, make and deliver to the Engineer a written statement of the nature of the damage sustained and of the basis of the claim against the City. On or before the 15th of the month succeeding that in which any damage shall have been sustained, the Contractor shall make and deliver to the Engineer an itemized statement of the details and amounts of such damage, duly verified by the Contractor. Unless such statements shall be made delivered within the times aforesaid, it is stipulated that and all claims for such compensation shall be forfeited and invalidated, and the Contractor shall not be entitled to payment on account of such claims.

ARTICLE 11.05 NO CLAIMS AGAINST INDIVIDUALS

No claim whatsoever shall be made by the Contractor against any officer, agent, employee of the City for, or on account of, anything done or omitted to be done in connection with this Contract.

ARTICLE 11.06 LIABILITY UNAFFECTED

Nothing herein contained shall in any manner create any liability against the City on behalf of any claim for labor, services, or materials, or of subcontractors, and nothing herein contained shall affect the liability of the Contractor or his sureties to the City or to any workmen or materialsmen upon bond given in connection with this Contract.

ARTICLE 11.07 INDEMNIFICATION PROVISIONS

Whenever there appears in this Agreement, or in the other Contact Documents made a part hereof, an indemnification provision within the purview of Chapter 725.06, Laws of Florida, the monetary limitation on the extent of the indemnification under each such provision shall be One Million Dollars or a sum equal to the total Contract price, whichever shall be the greater.

ARTICLE 11.08 UNLAWFUL PROVISIONS DEEMED STRICKEN

If this contract contains any unlawful provisions not an essential part of the Contract and which shall not appear to have a controlling or material inducement to the making thereof, such provisions shall be deemed of no effect and shall, upon notice by either party, be deemed stricken from the Contract without affecting the binding force of the remainder.

ARTICLE 11.09 LEGAL PROVISIONS DEEMED INCLUDED

Each and every provision of any law and clause required by law to be inserted in this Contract shall be deemed to be inserted herein, and the Contract shall be read and enforced as though it were included herein and if, through mistake or otherwise, any such provision is not inserted or is not correctly inserted, then upon application of either party the Contract shall forthwith be physically amended to make such insertion.

ARTICLE 11.10 DEATH OR INCOMPETENCY OF CONTRACTOR

In the event of death or legal incompetency of a Contractor who shall be an individual or surviving member of a contracting firm, such death or adjudication of incompetency

shall not terminate the Contract, but shall act as default hereunder to the effect provided in Article 9.01 hereof and the estate of the Contractor and his surety shall remain liable hereunder to the same extent as though the Contractor had lived. Notice of default, as provided in Article 9.01 hereof, shall not be required to be given in the event of such death or adjudication of incompetency.

ARTICLE 11.11 NUMBER AND GENDER OF WORDS
Whenever the context so admits or requires, all references herein in one number shall be deemed extended to and including the other number, whether singular or plural, and the use of any gender shall be applicable to all genders.

ARTICLE 11.12 ACCESS TO RECORDS
Representatives of Federal Agencies, if applicable, and the State of Florida shall have access to the work whenever it is in preparation of progress. On federally assisted projects the Federal Agency, the Comptroller General of the United States, or any authorized representative shall have access to any books, documents, papers, and records of the Contractor which are pertinent to the project for the purpose of making audit, examination, excerpts, and transcription thereof.

SECTION 12
LABOR STANDARDS

ARTICLE 12.01 LABOR STANDARDS
The Contractor shall comply with all of the regulations set forth in "Labor Standards Provisions for Federally Assisted Construction Contracts", which may be attached, and any applicable Florida Statutes.

ARTICLE 12.02 NOTICE TO LABOR UNIONS
If required, the Contractor shall provide Labor Unions and other organizations of workers, and shall post, in a conspicuous place available to employees or applicants for employment, a completed copy of the form entitled "Notice to Labor Unions or Other Organizations of Workers" attached to and made a part of this Agreement.

ARTICLE 12.03 SAFETY AND HEALTH REGULATIONS
The Contractor shall comply with the Department of Labor Safety and Health Regulations for construction promulgated under the Occupational Safety and Health Act of 1970 (PL 91- 596) and under Section 107 of the Contract Work Hours and Safety Standards Act (PL 91-54). Nothing in these Acts shall be construed to supersede or in any manner affect any worker's compensation law or statutory rights, duties, or liabilities of employers and employees under any law with respect to injuries, diseases, or death of employees arising out of, or in the course of, employment.

ARTICLE 12.04 EEO AFFIRMATIVE ACTION REQUIREMENTS
The Contractor understands and agrees to be bound by the equal opportunity requirements of Federal regulations which shall be applicable throughout the performance of work under this Contract. The Contractor also agrees to similarly bind contractually each subcontractor. In policies, the Contractor agrees to engage in Affirmative Action directed at promoting and ensuring equal employment opportunity in the work force used under the Contract (and the Contractor agrees to require contractually the same effort of all subcontractors whose subcontractors exceed $100,000). The Contractor understands and agrees that "Affirmative Action" as used herein shall constitute a good faith effort to achieve and maintain minority employment in each trade in the on-site work force used on the Contract.

ARTICLE 12.05 PREVAILING RATES OF WAGES
Florida's prevailing wage law was repealed effective April 25, 1979.

For Federally assisted projects, appropriate prevailing wage rate determinations are indicated on pages beginning with WR-1.

* * * * * * *

IN WITNESS THEREOF, the parties have hereunto set their hands and seals, and such of them as are corporation have caused these present to be signed by their duly authorized officers.

CITY OF TAMPA, FLORIDA

_____
Bob Buckhorn, Mayor
(SEAL)

ATTEST:

_____
City Clerk

Approved as to Form:
The execution of this document was authorized
by Resolution No. _____

_____
Rachel S. Peterkin, Assistant City Attorney

Contractor

By:_____
(SEAL)

Title:

ATTEST:

_____
Secretary

TAMPA AGREEMENT (ACKNOWLEDGMENT OF PRINCIPAL)

STATE OF)
) SS:
COUNTY OF)

For a Corporation:

STATE OF _____
COUNTY OF _____

The foregoing instrument was acknowledged before me this ___ of _____, 20___ by _____ of _____, a _____ corporation, on behalf of the corporation. He/she is ___ personally known or has ___ produced _____ as identification.

_____
Notary

My Commission Expires:

_____

For an Individual:

STATE OF _____
COUNTY OF _____

The foregoing instrument was acknowledged before me this ___ of _____, 20___ by _____ who is ___ personally known to me or has ___ produced _____ as identification.

_____
Notary

My Commission Expires:

_____

For a Firm:

STATE OF _____
COUNTY OF _____

The foregoing instrument was acknowledged before me this ___ of _____, 20___ by _____ who signed on behalf of the said firm. He/she is ___ personally known or has ___ produced _____ as identification.

_____
Notary

My Commission Expires:

_____

_____

PUBLIC CONSTRUCTION BOND

Bond No. (enter bond number)_____

Name of Contractor:_____

Principal Business Address of Contractor:_____

_____

Telephone Number of Contractor:_____

Name of Surety (if more than one list each):_____

_____

Principal Business Address of Surety:_____

_____

Telephone Number of Surety:_____

Owner is The City of Tampa, Florida

Principal Business Address of Owner: 306 E Jackson St, Tampa, FL 33602

Contract Administration Department (280A4N)

Telephone Number of Owner: 813/274-8456

Contract Number Assigned by City to contract which is the subject of this bond:_____

Legal Description or Address of Property Improved or Contract Number is:_____

_____

_____

_____

General Description of Work and Services:_____

_____

_____

_____

KNOW ALL MEN BY THESE PRESENTS That we, _____

_____
(Name of Contractor)

as Principal, hereinafter called CONTRACTOR, of the State of _____, and

_____(Name of Surety)
a corporation organized and existing under and by virtue of the laws of the State of _____, and regularly authorized to do business in the State of Florida, as SURETY, are held and firmly bound unto the City of Tampa, a municipal corporation organized and existing under the laws of the State of Florida, hereinafter called Owner, in the penal sum of _____Dollars and _____Cents ($_____), lawful money of the United States of America, for the payment whereof well and truly to be made, we bind ourselves, our heirs, executors, and administrators, successors and assigns, jointly and severally, firmly by these presents.

THE CONDITION OF THIS BOND is that if Principal:

1. Performs the contract dated _____, _____, 20___, between Principal and Owner for construction of _____, the contract being made a part of this bond by reference, in the time and in the manner prescribed in the contract; and

2. Promptly makes payments to all claimants, as defined in Section 255.05(1) (Section 713.01), Florida Statutes, supplying Principal with labor, materials, or supplies, used directly or indirectly by Principal in the prosecution of the work provided for in the contract; and

3. Pays Owner all losses, damages, expenses, costs, and attorney's fees, including appellate proceedings, that Owner sustains because of a default by Principal under the contract; and

4. Performs the guarantee of all work and materials furnished under the contract for the time specified in the contract, then this bond is void; otherwise it remains in full force.

5. Contractor and Surety acknowledge that the Work for which this bond has been issued may be one of several such contract documents for a group of projects. This bond does not secure covenants to pay for or to perform design services survey or program management services. The Owner/Obligee is expected to reasonably account for damages that are caused to Owner with respect to Principal's (Contractor's) default in performance of the scope of the Work incorporated by reference into the bond, and notwithstanding any contractual or common law remedy permitted to Owner as against Contractor, the obligation of Surety for any damages under this bond shall be determined by the cost of completion of the Work less the contract balance unpaid upon default of Contractor for the Work plus liquidated damages at the rate of $500.00 per day for delays by the Contractor and/or Surety in reaching substantial completion.

6. The notice requirements for claimants and conditions for entitlement to payment set forth in Section 255.05, Fla. Stat. and the limitations period to actions upon Section 255.05, Fla. Stat. bonds apply to claimants seeking payment from surety under this bond. Any action instituted by a claimant under this bond for payment must be in accordance with the notice and time limitation provisions in Section 255.05, Florida Statutes.

7. The Surety, for value received, hereby stipulates and agrees that no changes, extensions of time, alterations or additions to the terms of the contract documents or other Work to be performed hereunder, or the specifications referred to therein shall in any way affect its obligations under this bond, and it does hereby waive notice of any such changes, extensions of time, alterations or additions to the terms of the Contract or to Work or to the specifications.

8. The above SURETY states that it has read all of the Contract Documents made by the CONTRACTOR with the CITY, hereto attached, and the terms and conditions of the contract and work, and is familiar therewith and in particular those portions of the Agreement concerning the guaranty of such CONTRACTOR for a period of one year following the date of the final acceptance of the completed work under the Contract by the CITY, all of which this BOND includes.

DATED ON _____, 20___

_____
(Name of Principal)

_____
(Principal Business Address)

By _____

Title _____

_____
Telephone Number of Principal

Countersignature:

_____
(Name of Local Agency)

_____
(Address of Resident Agent)

By _____

Title _____

_____
Telephone Number of Local Agency

_____
(Name of Surety)

_____
(Surety Address)

By _____
(As Attorney in Fact)*

_____
Telephone Number of Surety

Accepted by City of Tampa:

By _____
Bob Buckhorn, Mayor

Date: _____ 20____

Approved as to legal sufficiency:

By _____
Assistant City Attorney

Date: _____, 20____

*(As Attorney in Fact) attach Power of Attorney and Current Certificate with Original Signature

SPECIFICATIONS
GENERAL PROVISIONS

SECTION 1
SCOPE AND INTENT

G-1.01 DESCRIPTION
The work to be done consists of the furnishing of all labor, materials and equipment, and the performance of all work included in this Contract.

G-1.02 WORK INCLUDED
The Contractor shall furnish all labor, superintendence, materials, plant, power, light, heat, fuel, water, tools, appliances, equipment, supplies, and other means of construction necessary or proper for performing and completing the work. He shall obtain and pay for all required permits. He shall perform and complete the work in the manner best calculated to promote rapid construction consistent with safety of life and property and to the satisfaction of the Engineer, and in strict accordance with the Contract Documents. The Contractor shall clean up the work and maintain it during and after construction, until accepted, and shall do all work and pay all costs incidental thereto. He shall repair or restore all structures and property that may be damaged or disturbed during performance of the work.

The cost of incidental work described in these General Provisions, for which there are no specific Contract Items, shall be considered as part of the overhead cost of doing the work and shall be included in the prices for the various Contract Items. No additional payment will be made therefor.

The Contractor shall provide and maintain such modern plant, tools, and equipment as may be necessary, in the opinion of the Engineer, to perform in a satisfactory and acceptable manner all the work required by this Contract. Only equipment of established reputation and proven efficiency shall be used. The Contractor shall be solely responsible for the adequacy of his plant and equipment, prior approval of the Engineer notwithstanding.

G-1.03 PUBLIC UTILITY INSTALLATIONS AND STRUCTURES
Public utility installations and structures shall be understood to include all poles, tracks, pipes, wires, conduits, house service connections, vaults, manholes, and all other appurtenances and facilities pertaining thereto whether owned or controlled by the City, other governmental bodies or privately owned by individuals, firms, or corporations, and used to serve the public with transportation, traffic control, gas, electricity, telephone, sewerage, drainage, water or other public or private property which may be affected by the work.

The Contract Documents contain data relative to existing public utility installations and structures above and below the ground surface. These data are not guaranteed as to their completeness or accuracy and it is the responsibility of the Contractor to make his own investigations to inform himself fully of the character, condition and extent of all such installations and structures as may be encountered and as may affect the construction operations.

The Contractor shall protect all public utility installations and structures from damage during the work. Access across any buried public utility installation or structure shall be made only in such locations and by means approved by the Engineer. The Contractor shall so arrange his operations as to avoid any damage to these facilities. All required protective devices and construction shall be provided by the Contractor at his expense. All existing public utilities damaged by the Contractor which are shown on the Plans or have been located in the field by the utility shall be repaired by the Contractor, at his expense, as directed by the Engineer. No separate payment shall be made for such protection or repairs to public utility installations or structures.

Public utility installations or structures owned or controlled by the City or other governmental body which are shown on the Plans to be removed, relocated, replaced or rebuilt by the Contractor shall be considered as a part of the general cost of doing the work and shall be included in the prices bid for the various Contract Items. No separate payment shall be made therefor.

Where public utility installations or structures owned or controlled by the City or other governmental body are encountered during the course of the work, and are not indicated on the Plans or in the Specifications, and when, in the opinion of the Engineer, removal, relocation, replacement or rebuilding is necessary to complete the work under this Contract, such work shall be accomplished by the utility having jurisdiction or such work may be ordered, in writing by the Engineer, for the Contractor to accomplish. If such work is accomplished by the utility having jurisdiction it will be carried out expeditiously and the Contractor shall give full cooperation to permit the utility to complete the removal, relocation, replacement or rebuilding as required. If such work is accomplished by the Contractor, it will be paid for as extra work as provided for in Article 7.02 of the Agreement.

The Contractor shall, at all times in performance of the work, employ approved methods and exercise reasonable care and skill so as to avoid unnecessary delay, injury, damage or destruction of public utility installations and structures; and shall, at all times in the performance of the work, avoid unnecessary interference with, or interruption of, public utility services, and shall cooperate fully with the owners thereof to that end.

All City and other governmental utility departments and other owners of public utilities, which may be affected by the work, will be informed in writing by the Engineer within two weeks after the execution of the Contract or Contracts covering the work. Such notice will set out, in general, and direct attention to, the responsibilities of the City and other governmental

utility departments and other owners of public utilities for such installations and structures as may be affected by the work and will be accompanied by one set of Plans and Specifications covering the work under such Contract or Contracts.

In addition to the general notice given by the Engineer, the Contractor shall give written notice to all City and other governmental utility departments and other owners of public utilities of the location of his proposed construction operations, at least forty-eight (48) hours in advance of breaking ground in any area or on any unit of the work. This can be accomplished by making the appropriate contact with the "Underground Utility Notification Center for Excavators (Call Candy)".

The maintenance, repair, removal, relocation, or rebuilding of public utility installations and structures, when accomplished by the Contractor as herein provided, shall be done by methods approved by the Engineer.

SECTION 2
PLANS AND SPECIFICATIONS

G-2.01 PLANS
The Plans referred to in the Contract Documents bear the general project name and number as shown in the Notice To Bidders.

When obtaining data and information from the Plans, figures shall be used in preference to scaled dimensions, and large scale drawings in preference to small scale drawings.

G-2.02 COPIES FURNISHED TO CONTRACTOR
After the Contract has been executed, the Contractor will be furnished with five sets of paper prints, the same size as the original drawings, of each sheet of the Plans and five copies of the Specifications. Additional copies of the Plans and Specifications, when requested, may be furnished to the Contractor at cost of reproduction.

The Contractor shall furnish each of the subcontractors, manufacturers, and material suppliers such copies of the Contract Documents as may be required for his work.

G-2.03 SUPPLEMENTARY DRAWINGS
When, in the opinion of the Engineer, it becomes necessary to explain more fully the work to be done or to illustrate the work further or to show any changes which may be required, drawings known as Supplementary Drawings, with specifications pertaining thereto, will be prepared by the Engineer and five paper prints thereof will be given to the Contractor.

The Supplementary Drawings shall be binding upon the Contractor with the same force as the Plans. Where such Supplementary Drawings require either less or more than the estimated quantities of work, credit to the City or compensation therefor to the Contractor shall be subject to the terms of the Agreement.

G-2.04 CONTRACTOR TO CHECK PLANS AND DATA
The Contractor shall verify all dimensions, quantities, and details shown on the Plans, Supplementary Drawings, Schedules, Specifications, or other data received from the Engineer, and shall notify him of all errors, omissions, conflicts, and discrepancies found therein. Failure to discover or correct errors, conflicts or discrepancies shall not relieve the Contractor of full responsibility for unsatisfactory work, faulty construction or improper operation resulting therefrom nor from rectifying such conditions at his own expense. He will not be allowed to take advantage of any errors or omissions as full instructions will be furnished by the Engineer, should such errors or omissions be discovered. All schedules are given for the convenience of the Engineer and the Contractor and are not guaranteed to be complete. The Contractor shall assume all responsibility for the making of estimates of the size, kind, and quality of materials and equipment included in work to be done under the Contract.

G-2.05 SPECIFICATIONS
The specifications consist of four parts, the General Provisions, the Technical Specifications, the Special Provisions and the Contract Items. The General Provisions and Technical Specifications contain general requirements which govern the work. The Special Provisions and the Contract Items modify and supplement these by detailed requirements for the work and shall always govern, whenever there appears to be conflict.

G-2.06 INTENT
All work called for in the Specifications applicable to this Contract, but not shown on the Plans in their present form, or vice versa, shall be of like effect as if shown or mentioned in both. Work not specified in either the Plans or in the Specifications, but involved in carrying out their intent or in the complete and proper execution of the work, is required and shall be performed by the Contractor as though it were specifically delineated or described.

The apparent silence of the Specifications as to any detail, or the apparent omission from them of a detailed description concerning any work to be done and materials to be furnished, shall be regarded as meaning that only the best general practice is to prevail and that only material and workmanship of the best quality is to be used, and interpretation of these Specifications shall be made upon that basis.

SECTION 3
WORKING DRAWINGS

G-3.01 SCOPE
The Contractor shall promptly prepare and submit layout, detail and shop drawings to insure proper construction, assembly, and installation of the work using those materials and methods as hereafter specified under the Technical Specifications, Special Provisions and Contract Items.

These drawings shall accurately and distinctly present the following:

a. All working and erection dimensions.
b. Arrangements and sectional views.
c. Necessary details, including complete information for making connections between work under this Contract and work under other Contracts.
d. Kinds of materials and finishes.
e. Parts listed and description thereof.

Drawings for mechanical equipment shall present, where applicable, such data as dimensions, weight and performance characteristics. These data shall show conformance with the performance characteristics and other criteria incorporated in the Plans and Specifications.

Each drawing shall be dated and shall contain the name of the project, Division number and description, the technical specifications section number, names of equipment or materials and the location at which the equipment or materials are to be installed. Location shall mean both physical location and location relative to other connected or attached material. The Engineer will return unchecked any submittal which does not contain complete data on the work and full information on related matters.

Stock or standard drawings will not be accepted for review unless full identification and supplementary information is shown thereon in ink or typewritten form.

The Contractor shall review all working drawing submittals before transmitting them to the Engineer to determine that they comply with requirements of the Specifications. Drawings which are incomplete or are not in compliance with the Contract Documents shall not be submitted for processing by the Engineer. The Contractor shall place his stamp of approval on all working drawings submitted to the Engineer to indicate compliance with the above.

G-3.02 APPROVAL
If the working drawings show departures from the Contract requirements, the Contractor shall make specific mention thereof in his letter of submittal; otherwise approval of such submittals shall not constitute approval of the departure. Approval of the drawings shall constitute approval of the subject matter thereof only and not of any structure, material, equipment, or apparatus shown or indicated.

The approval of drawings will be general and shall not relieve the Contractor of responsibility for the accuracy of such drawings, nor for the proper fitting and construction of the work, nor for the furnishing of materials or work required by the Contract and not indicated on the drawings. No work called for by working drawings shall be done until such drawings have been approved by the Engineer.

The procedure in seeking approval of the working drawings shall be as follows:

1.The Contractor shall submit four complete sets of drawings and other descriptive data together with one copy of a letter of transmittal to the Engineer for approval. The letter of transmittal shall contain the name of the project, contract number, technical specifications section number, the name of the Contractor, a list of drawings with numbers and titles, and any other pertinent information.

2.Drawings or descriptive data will be stamped "Approved", "Approved Subject to Corrections Marked", or "Examined and Returned for Correction" and one copy with a letter of transmittal will be returned to the Contractor.

3.If a drawing or other data is stamped "Approved", the Contractor shall insert the date of approval on five additional copies of the document and transmit the five copies to the Engineer together with one copy of a letter of transmittal containing substantially the same information as described in Instruction 1. above.

4.If a drawing or other data is stamped "Approved Subject to Corrections Marked", the Contractor shall make the corrections indicated and proceed as in Instruction 3., above.

5.If a drawing or data is stamped "Examined and Returned for Correction", the Contractor shall make the necessary corrections and resubmit the documents as set forth in Instruction 1., above. The letter of transmittal shall indicate that this is a resubmittal.

The Contractor shall revise and resubmit the working drawings as required by the Engineer, until approval thereof is obtained.

SECTION 4
MATERIALS AND EQUIPMENT

G-4.01 GENERAL REQUIREMENTS
All materials, appliances, and types or methods of construction shall be in accordance with the Specifications and shall, in no event, be less than that necessary to conform to the requirements of any applicable laws, ordinances, and codes.

All materials and equipment shall be new, unused, and correctly designed. They shall be of standard first grade quality, produced by expert personnel, and intended for the use for which they are offered. Materials or equipment which, in the opinion of the Engineer, are inferior or of a lower grade than indicated, specified, or required will not be accepted.

The quality of Workmanship and Materials entering into the work under this Contract shall conform to the requirements of the pertinent sections, clauses, paragraphs, and sentences, both directly and indirectly applicable thereto, of that part of the Technical Specifications, whether or not direct reference to such occurs in the Contract Items.

Equipment and appurtenances shall be designed in conformity with ANSI, ASME, IEEE, NEMA and other

generally accepted standards and shall be of rugged construction and of sufficient strength to withstand all stresses which may occur during fabrication, testing, transportation, installation, and all conditions of operation. All bearings and moving parts shall be adequately protected against wear by bushings or other approved means and shall be fully lubricated by readily accessible devices. Details shall be designed for appearance as well as utility. Protruding members, joints, corners, gear covers, and the like, shall be finished in appearance. All exposed welds shall be ground smooth and the corners of structural shapes shall be mitered.

Equipment shall be of the approximate dimensions as indicated on the Plans or as specified, shall fit the spaces shown on the Plans with adequate clearances, and shall be capable of being handled through openings provided in the structure for this purpose. The equipment shall be of such design that piping and electrical connections, ductwork, and auxiliary equipment can be assembled and installed without causing major revisions to the location or arrangement of any of the facilities.

Machinery parts shall conform exactly to the dimensions shown on the working drawings. There shall be no more fitting or adjusting in setting up a machine than is necessary in assembling high grade apparatus of standard design. The equivalent parts of identical machines shall be made interchangeable. All grease lubricating fittings on equipment shall be of a uniform type. All machinery and equipment shall be safeguarded in accordance with the safety codes of the ANSI and applicable state and local codes.

G-4.02 MANUFACTURER

The names of proposed manufacturers, suppliers, material, and dealers who are to furnish materials, fixtures, equipment, appliances or other fittings shall be submitted to the Engineer for approval, as early as possible, to afford proper investigation and checking. Such approval must be obtained before shop drawings will be checked. No manufacturer will be approved for any materials to be furnished under this Contract unless he shall be of good reputation and have a plant of ample capacity. He shall, upon the request of the Engineer, be required to submit evidence that he has manufactured a similar product to the one specified and that it has been previously used for a like purpose for a sufficient length of time to demonstrate its satisfactory performance.

All transactions with the manufacturers or subcontractors shall be through the Contractor, unless the Contractor shall request, in writing to the Engineer, that the manufacturer or subcontractor deal directly with the Engineer. Any such transactions shall not in any way release the Contractor from his full responsibility under this Contract.

Any two or more pieces of material or equipment of the same kind, type or classification, and being used for identical types of service, shall be made by the same manufacturer.

G-4.03 REFERENCE TO STANDARDS

Whenever reference is made to the furnishing of materials or testing thereof to conform to the standards of any technical society, organization or body, it shall be construed to mean the latest standard, code, specification or tentative specification adopted and published at the date of advertisement for proposals, even though reference has been made to an earlier standard, and such standards are made a part hereof to the extent which is indicated or intended.

Reference to a technical society, organization or body may be made in the Specifications by abbreviations, in accordance with the following list:

AASHTO for American Association of State Highway and Transportation Officials (formerly AASHO)
ACI for American Concrete Institute
AGMA for American Gear Manufacturer's Association
AFBMA for Anti-Friction Bearing Manufacturer's Association
AISC for American Institute of Steel Construction
AISI for American Iron and Steel Institute
ANSI for American National Standards Institute
ASCE for American Society of Civil Engineers
ASTM for American Society for Testing and Materials
ASME for American Society of Mechanical Engineers
AWS for American Welding Society
AWWA for American Water Works Association
AWPA for American Wood Preservers Association
CEMA for Conveyor Equipment Manufacturers Association
CIPRA for Cast Iron Pipe Research Association
IEEE for Institute of Electrical and Electronic Engineers
IPCEA for Insulated Power Cable Engineers Association
NEC for National Electrical Code
NEMA for National Electrical Manufacturers Association
SAE for Society of Automotive Engineers
SHBI for Steel Heating Boiler Institute
Fed.Spec. for Federal Specifications
Navy Spec. for Navy Department Specifications
U.L.,Inc. for Underwriters' Laboratories, Inc.

When no reference is made to a code, standard or specification, the Standard Specifications of the ANSI, the ASME, the ASTM, the IEEE, or the NEMA shall govern.

G-4.04 SAMPLES

The Contractor shall, when required, submit to the Engineer for approval typical samples of materials and equipment. The samples shall be properly identified by tags and shall be submitted sufficiently in advance of the time when they are to be incorporated into the work, so that rejections thereof will not cause delay. A letter of transmittal, in duplicate, from the Contractor requesting approval must accompany all such samples.

G-4.05 EQUIVALENT QUALITY

Whenever, in the Contract Documents, an article, material, apparatus, equipment, or process is called for by trade name or by the name of a patentee, manufacturer, or dealer or by reference to catalogs of a manufacturer or dealer, it shall be understood as intending to mean and specify the article, material, apparatus, equipment or process designated, or any

equal thereto in quality, finish, design, efficiency, and durability and equally serviceable for the purposes for which it is intended.

Whenever material or equipment is submitted for approval as being equal to that specified, the decision as to whether or not such material or equipment is equal to that specified shall be made by the Engineer.

Upon rejection of any material or equipment submitted as the equivalent of that specifically named in the Contract, the Contractor shall immediately proceed to furnish the designated material or equipment.

Neither the approval by the Engineer of alternate material or equipment as being equivalent to that specified nor the furnishing of the material or equipment specified, shall in any way relieve the Contractor of responsibility for failure of the material or equipment, due to faulty design, material, or workmanship, to perform the functions required of them by the Specifications.

G-4.06 DELIVERY

The Contractor shall deliver materials in ample quantities to insure the most speedy and uninterrupted progress of the work so as to complete thw work within the allotted time. The Contractor shall also coordinate deliveries in order to avoid a delay in, or impediment of, the progress of the work of any related Contractor.

G-4.07 CARE AND PROTECTION

The Contractor shall be solely responsible for properly storing and protecting all materials, equipment, and work furnished under the Contract from the time such materials and equipment are delivered at the site of the work until final acceptance thereof. He shall, at all times, take necessary precautions to prevent injury or damage by water, freezing, or by inclemencies of the weather to such materials, equipment and work. All injury or damage to materials, equipment, or work resulting from any cause whatsoever shall be made good by the Contractor.

The Engineer shall, in all cases, determine the portion of the site to be used by the Contractor for storage, plant or for other purposes. If, however, it becomes necessary to remove and restack materials to avoid impeding the progress of any part of the work or interference with the work to be done by any other Contractor, the Contractor shall remove and restack such materials at his own expense.

G-4.08 TOOLS AND ACCESSORIES

The Contractor shall, unless otherwise stated in the Contract Documents, furnish with each type, kind or size of equipment, one complete set of suitably marked high grade special tools and appliances which may be needed to adjust, operate, maintain, or repair the equipment. Such tools and appliances shall be furnished in approved painted steel cases, properly labeled and equipped with good grade cylinder locks and duplicate keys.

Spare parts shall be furnished as specified.

Each piece of equipment shall be provided with a substantial nameplate, securely fastened in place and clearly inscribed with the manufacturer's name, year of manufacture, serial number, weight and principal rating data.

G-4.09 INSTALLATION OF EQUIPMENT

The Contractor shall have on hand sufficient proper equipment and machinery of ample capacity to facilitate the work and to handle all emergencies normally encountered in work of this character.

Equipment shall be erected in a neat and workmanlike manner on the foundations at the locations and elevations shown on the Plans, unless directed otherwise by the Engineer during installation. All equipment shall be correctly aligned, leveled and adjusted for satisfactory operation and shall be installed so that proper and necessary connections can be made readily between the various units.

The Contractor shall furnish, install and protect all necessary anchor and attachment bolts and all other appurtenances needed for the installation of the devices included in the equipment specified. Anchor bolts shall be as approved by the Engineer and made of ample size and strength for the purpose intended. Substantial templates and working drawings for installation shall be furnished.

The Contractor shall, at his own expense, furnish all materials and labor for, and shall properly bed in non-shrink grout, each piece of equipment on its supporting base that rests on masonry foundations. Grout shall completely fill the space between the equipment base and the foundation.

G-4.10 OPERATING INSTRUCTIONS

The Contractor, through qualified individuals, shall adequately instruct designated employees of the City in the operation and care of all equipment installed hereunder, except for equipment that may be furnished by the City.

The Contractor shall also furnish and deliver to the Engineer three complete sets for permanent files, identified in accordance with Subsection G-3.01 hereof, of instructions, technical bulletins and any other printed matter, such as diagrams, prints or drawings, containing full information required for the proper operation, maintenance, and repair, of the equipment installed and the ordering of spare parts, except for equipment that may be furnished by the City.

In addition to the above three copies, the Contractor shall furnish any additional copies that may be required for use during construction and start-up operations.

G-4.11 SERVICE OF MANUFACTURER'S ENGINEER

The Contract prices for equipment shall include the cost of furnishing a competent and experienced engineer or superintendent who shall represent the manufacturer and shall assist the Contractor, when required, to install, adjust, test and place in operation the equipment in conformity with the Contract Documents. After the equipment is placed in

permanent operation by the City, such engineer or superintendent shall make all adjustments and tests required by the Engineer to provide that such equipment is in proper and satisfactory operating condition, and shall instruct such personnel as may be designated by the City in the proper operation and maintenance of such equipment.

SECTION 5
INSPECTION AND TESTING

G-5.01 GENERAL
The Contractor's attention is hereby directed to Article 3.03 of the Agreement.

Inspection and testing of materials will be performed by the City unless otherwise specified.

For tests specified to be made by the Contractor, the testing personnel shall make the necessary inspections and tests and the reports thereof shall be in such form as will facilitate checking to determine compliance with the Contract Documents. Five copies of the reports shall be submitted and authoritative certification thereof must be furnished to the Engineer as a prerequisite for the acceptance of any material or equipment.

If, in the making of any test of any material or equipment, it is ascertained by the Engineer that the material or equipment does not comply with the Contract, the Contractor will be notified thereof and he will be directed to refrain from delivering said material and equipment, or to remove it promptly from the site or from the work and replace it with acceptable material, without cost to the City.

Tests of electrical and mechanical equipment and appliances shall be conducted in accordance with recognized test codes of the ANSI, ASME, or the IEEE, except as may otherwise be stated herein.

The Contractor shall be fully responsible for the proper operation of equipment during tests and instruction periods and shall neither have nor make any claim for damage which may occur to equipment prior to the time when the City formally takes over the operation thereof.

G-5.02 COSTS
All inspection and testing of materials furnished under this Contract will be performed by the City or duly authorized inspection engineers or inspection bureaus without cost to the Contractor, unless otherwise expressly specified.

The cost of shop and field tests of equipment and of certain other tests specifically called for in the Contract Documents shall be borne by the Contractor and such costs shall be deemed to be included in the contract price.

Materials and equipment submitted by the Contractor as the equivalent to those specifically named in the Contract may be tested by the City for compliance. The Contractor shall reimburse the City for the expenditures incurred in making such tests on materials and equipment which are rejected for noncompliance.

G-5.03 INSPECTIONS OF MATERIALS
The Contractor shall give notice, in writing to the Engineer, sufficiently in advance of his intention to commence the manufacture or preparation of materials especially manufactured or prepared for use in or as part of the permanent construction. Such notice shall contain a request for inspection, the date of commencement and the expected date of completion of the manufacture or preparation of materials. Upon receipt of such notice the Engineer will arrange to have a representative present at such times during the manufacture as may be necessary to inspect the materials or he will notify the Contractor that inspection will be made at a point other than the point of manufacture, or he will notify the Contractor that inspection will be waived. The Contractor must comply with these provisions before shipping any material. Such inspection shall not release the Contractor from the responsibility for furnishing materials meeting the requirements of the Contract Documents.

G-5.04 CERTIFICATE OF MANUFACTURE
When inspection is waived or when the Engineer so requires, the Contractor shall furnish to him authoritative evidence in the form of Certificates of Manufacture that the materials to be used in the work have been manufactured and tested in conformity with the Contract Documents. These certificates shall be notarized and shall include copies of the results of physical tests and chemical analyses, where necessary, that have been made directly on the product or on similar products of the manufacturer.

G-5.05 SHOP TESTS OF OPERATING EQUIPMENT
Each piece of equipment for which pressure, duty, capacity, rating, efficiency, performance, function, or special requirements are specified shall be tested in the shop of the maker in a manner which shall conclusively prove that its characteristics comply fully with the requirements of the Contract Documents. No such equipment shall be shipped to the work until the Engineer notifies the Contractor, in writing, that the results of such tests are acceptable.

Five copies of the manufacturer's actual test data and interpreted results thereof, accompanied by a certificate of authenticity sworn to by a responsible official of the manufacturing company, shall be forwarded to the Engineer for approval.

The cost of the shop tests and of furnishing manufacturer's preliminary and shop test data of operating equipment shall be borne by the Contractor.

G-5.06 PRELIMINARY FIELD TESTS
As soon as conditions permit, the Contractor shall furnish all labor, materials, and instruments and shall make preliminary field tests of equipment. If the preliminary field tests disclose any equipment furnished under this Contract which does not comply with the requirements of the Contract Documents, the Contractor shall, prior to the acceptance tests, make all changes, adjustments, and replacements required.

G-5.07 FINAL FIELD TESTS
Upon completion of the work and prior to final payment, all equipment and appliances installed under this Contract shall be subjected to acceptance tests as specified or required to prove compliance with the Contract Documents.

The Contractor shall furnish labor, fuel, energy, water and all other materials, equipment, and instruments necessary for all acceptance tests, at no additional cost to the City.

G-5.08 FAILURE OF TESTS
Any defects in the materials and equipment or their failure to meet the tests, guarantees or requirements of the Contract Documents shall be promptly corrected by the Contractor by replacements or otherwise. The decision of the Engineer as to whether or not the Contractor has fulfilled his obligations under the Contract shall be final and conclusive. If the Contractor fails to make those corrections or if the improved materials and equipment, when tested, shall again fail to meet the guarantees or specified requirements, the City, notwithstanding its partial payment for work, and materials and equipment, may reject the materials and equipment and may order the Contractor to remove them from the site at his own expense.

In case the City rejects any materials and equipment, then the Contractor shall replace the rejected materials and equipment within a reasonable time. If he fails to do so, the City may, after the expiration of a period of thirty calendar days after giving him notice in writing, proceed to replace such rejected materials and equipment, and the cost thereof shall be deducted from any compensation due or which may become due the Contractor under this Contract.

The City agrees to obtain other equipment within a reasonable time and the Contractor agrees that the City may use the equipment furnished by him without rental or other charges until the new equipment is obtained.

Materials or work in place that fails to pass acceptability tests shall be retested at the direction of the construction engineer all such retests shall be at the Contractor's expense. The rates charged shall be in accordance with the Department of Public Works current annual inspection contract which is available for inspection at the offices of the Department of Public Works.

G-5.09 FINAL INSPECTION
The procedures for final inspection shall be in accordance with the provisions of Article 4.07 of the Agreement. During such final inspections, the work shall be clean and free from water. In no case will the final estimate be prepared until the Contractor has complied with all the requirements set forth and the Engineer has made his final inspection of the entire work and is satisfied that the entire work is properly and satisfactorily cosntructed in accordance with the requirements of the Contract Documents.

SECTION 6

TEMPORARY STRUCTURES

G-6.01 GENERAL
All false work, scaffolding, ladders, hoistways, braces, pumping plants, shields, trestles, roadways, sheeting, centering forms, barricades, drains, flumes, and the like, any of which may be needed in the construction of any part of the work and which are not herein described or specified in detail, must be furnished, maintained and removed by the Contractor, and he shall be responsible for the safety and efficiency of such works and for any damages that may result from their failure or from their improper construction, maintenance, or operation.

G-6.02 PUBLIC ACCESS
At all points in the work where public access to any building, house, place of business, public road, or sidewalk would be obstructed by any action of the Contractor in executing the work required by this Contract, the Contractor shall provide such temporary structure, bridges or roadway as may be necessary to maintain public access at all times. At least one lane for vehicular traffic shall be maintained in streets in which the Contractor is working. Street closure permits are required from the Department of Public Works.

The Contractor shall provide suitable temporary bridges, as directed by the Engineer, at street intersections when necessary for the maintenance of vehicular and pedestrian traffic.

Prior to temporarily cutting of access to driveways and garages, the Contractor shall give twelve (12) hours notice to affected property owners. Interruptions to use of private driveways shall be kept to a minimum.

G-6.03 CONTRACTOR'S FIELD OFFICE
The Contractor shall erect, furnish and maintain a field office with a telephone at the site during the entire period of construction. He or an authorized agent shall be present at this office at all times while his work is in progress. Readily accessible copies of both the Contract Documents and the latest approved working drawings shall be kept at this field office.

G-6.04 TEMPORARY FENCE
If, during the course of the work, it is necessary to remove or disturb any fence or part thereof, the Contractor shall, at his own expense, if so ordered by the Engineer, provide a suitable temporary fence which shall be maintained until the permanent fence is replaced. The Engineer shall be solely responsible for the determination of the necessity for providing a temporary fence and the type of temporary fence to be used.

G-6.05 RESPONSIBILITY FOR TEMPORARY STRUCTURES
In accepting the Contract, the Contractor assumes full responsibility for the sufficiency and safety of all temporary structures or work and for any damage which may result from their failure or their improper construction, maintenance, or operation and will indemnify and save harmless the City from

all claims, suits or actions and damages or costs of every description arising by reason of failure to comply with the above provisions.

SECTION 7
TEMPORARY SERVICES

G-7.01 WATER
The Contractor shall provide the necessary water supply at his own expense. He shall, if necessary, provide and lay necessary waterlines from existing mains to the place of using, shall secure all necessary permits and pay for all taps to water mains or hydrants and for all water used at the established rates.

G-7.02 LIGHT AND POWER
The Contractor shall provide, at his own expense, temporary lighting and power facilities required for the proper prosecution and inspection of the work. If, in the opinion of the Engineer, these facilities are inadequate, the Contractor will not be permitted to proceed with any portion of the work affected thereby.

G-7.03 SANITARY REGULATIONS
The Contractor shall prohibit and prevent the committing of nuisances on the site of the work or on adjoining property and shall discharge any employee who violates this rule.

Ample washrooms and toilet facilities and a drinking water supply shall be furnished and maintained in strict conformity with the law by the Contractor for use by his employees.

G-7.04 ACCIDENT PREVENTION
Precautions shall be exercised at all times for the protection of persons and property. The safety provisions of applicable laws, building and construction codes shall be observed. The Contractor shall comply with the U. S. Department of Labor Safety and Health Regulations for construction promulgated under the Occupational Safety and Health Act of 1970 (PL 91-596), and under Section 107 of the Contract Work. Hours and Safety Standards Act (PL 91-54), except where state and local safety standards exceed the federal requirements and except where state safety standards have been approved by the Secretary of Labor in accordance with provisions of the Occupational Safety and Health Act.

G-7.05 FIRST AID
The Contractor shall keep upon the site, at each location where work is in progress, a completely equipped first aid kit and shall provide ready access thereto at all times when men are employed on the work.

G-7.06 HEATING
The Contractor shall provide temporary heat, at his own expense, whenever required on account of work being carried on during cold weather and to prevent freezing of water pipes and other damage to the work.

SECTION 8

LINES AND GRADES

G-8.01 GENERAL
All work done under this Contract shall be constructed in accordance with the lines and grades shown on the Plans, or as given by the Engineer. The full responsibility for keeping alignment and grade shall rest upon the Contractor.

The Engineer will establish bench marks and base line controlling points. Reference remarks for lines and grades as the work progresses will be located to cause as little inconvenience to the prosecution of the work as possible. The Contractor shall so place excavation and other materials as to cause no inconvenience in the use of the use of the reference marks provided. He shall remove any obstructions placed by him contrary to this provision.

G-8.02 SURVEYS
The Contractor shall furnish and maintain, at his own expense, stakes and other such materials, and give such assistance, including qualified helpers, as may be required by the Engineer for setting reference marks. The Contractor shall check such reference marks by such means as he may deem necessary and, before using them, shall call the Engineer's attention to any inaccuracies. The Contractor shall, at his own expense, establish all working or construction lines and grades as required from the reference marks set by the Engineer, and shall be solely responsible for the accuracy thereof. He shall, however, be subject to the check and review of the Engineer.

The Contractor shall keep the Engineer informed a reasonable time in advance as to his need for line and grade reference marks, in order that they may be furnished and all necessary measurements made for record and payment with the minimum of inconvenience to the Engineer or of delay to the Contractor.

It is the intention not to delay the work for the establishment of reference marks but, when necessary, working operations shall be suspended for such reasonable time as the Engineer may require for this purpose.

G-8.03 SAFEGUARDING MARKS
The Contractor shall safeguard all points, stakes, grade marks, monuments and bench marks made or established on the work, bear the cost of reestablishing them if disturbed, and bear the entire expense of rectifying work improperly installed due to not maintaining or protecting or to removing without authorization such established points, stakes and marks.

The Contractor shall safeguard all existing and known property corners, monuments and marks adjacent to but not related to the work and, if required, shall bear the cost of reestablishing them if disturbed or destroyed.

G-8.04 DATUM PLANE
All elevations indicated or specified refer to the Mean Sea Level Datum of the U.S.C. & G.S. (N.O.S.) which is 0.80 feet above the Mean Low Water Datum of the U. S. Army

Corps of Engineers.

SECTION 9
ADJACENT STRUCTURES AND LANDSCAPING

G-9.01 RESPONSIBILITY
The responsibility for removal, replacement, relocation, repair, rebuilding or protection of all public utility installations, including poles, tracks, pipes, wires, conduits, house service connections, vaults, manholes, sewers, traffic control and fire alarm signal circuit installations and other appurtenances and facilities shall be in accordance with G-1.02 and G-1.03.

The Contractor shall also be entirely responsible and liable for all damage or injury as a result of his operations to all other adjacent public and private property, structures of any kind and appurtenances thereto met with during the progress of the work. The cost of protection, replacement in their original locations and conditions or payment of damages for injuries to such adjacent public and private property and structures affected by the work, whether or not shown on the Plans, and the removal, relocation, and reconstruction of such items called for on the Plans or specified shall be included in the various Contract Items and no separate payment will be made therefor. Where such public and private property, structures of any kind and appurtenances thereto are not shown on the Plans and when, in the opinion of the Engineer, removal or relocation and reconstruction is necessary to avoid interference with the work, payment therefor will be made as provided for extra work in Article 7.02 of the Agreement.

G-9.02 PROTECTION OF TREES
All trees and shrubs shall be adequately protected by the Contractor with boxes or otherwise and, within the City of Tampa, in accordance with ordinances governing the protection of trees. No excavated materials shall be placed so as to injure such trees or shrubs. Trees or shrubs destroyed by negligence of the Contractor or his employees shall be replaced by him with new stock of similar size and age, at the proper season, and at the sole expense of the Contractor.

Beneath trees or other surface structures, where possible, pipelines may be built in short tunnels, backfilled with excavated materials, except as otherwise specified, or the trees or structures carefully supported and protected from damage.

The City may order the Contractor, for the convenience of the City, to remove trees along the line of trench excavation. If so ordered, the City will obtain any permits required for removal of trees. Such tree removal ordered shall be paid for under the appropriate Contract Items.

G-9.03 LAWN AREAS
Lawn areas shall be left in as good condition as before the starting of the work. Where sod is to be removed, it shall be carefully removed and later replaced, or the area where sod has been removed shall be restored with new sod in the manner described in the Technical Specifications section.

G-9.04 RESTORATION OF FENCES
Any fence, or part thereof, that is damaged or removed during the course of the work shall be replaced or repaired by the Contractor and shall be left in as good a condition as before the starting of the work. The manner in which the fence is repaired or replaced and the materials used in such work shall be subject to the approval of the Engineer. The cost of all labor, materials, equipment, and work for the replacement or repair of any fence shall be deemed included in the appropriate Contract Item or Items, or if no specific Item is provided therefor, as part of the overhead cost of the work, and no additional payment will be made therefor.

SECTION 10
PROTECTION OF WORK AND PUBLIC

G-10.01 TRAFFIC REGULATIONS
The Contractor shall arrange his work to comply with Article G-6.02. The work shall be done with the least possible inconvenience to the public and to that end the work may be confined by the Engineer to one block at a time.

G-10.02 BARRIERS AND LIGHTS
During the prosecution of the work, the Contractor shall put up and maintain at all times such barriers, and lights, as will effectually prevent accidents. The Contractor shall provide suitable barricades, red lights, "danger" or "caution" or "street closed" signs and watchmen at all places where the work causes obstructions to the normal traffic or constitutes in any way a hazard to the public. Such barriers and signs shall be constructed to State of Florida Department of Transportation standards and placed as recommended by the Traffic Division of the City's Department of Public Works.

No open fires will be permitted.

G-10.03 SMOKE PREVENTIONS
The Contractor shall use hard coal, coke, oil or gas as fuel for equipment generating steam. A strict compliance with ordinances regulating the production and emission of smoke will be required.

G-10.04 NOISE
The Contractor shall eliminate noise to as great an extent as practicable at all times. Air compressing plants shall be equipped with silencers and the exhaust of all gasoline motors or other power equipment shall be provided with mufflers. In the vicinity of hospitals and schools, special care shall be used to avoid noise or other nuisances. The Contractor shall strictly observe all local regulations and ordinances covering noise control.

Except in the event of an emergency, no work shall be done between the hours of 7:00 p.m. and 7:00 a.m., or on Sundays. If the proper and efficient prosecution of the work requires operations during the night, the written permission of the Engineer shall be obtained before starting such items of the work.

G-10.05 ACCESS TO PUBLIC SERVICES
Neither the materials excavated nor the materials or plant used in the construction of the work shall be so placed as to prevent free access to all fire hydrants, valves or manholes.

G-10.06 DUST PREVENTION
The Contractor shall prevent dust nuisance from his operations or from traffic by keeping the streets sprinkled with water at all times.

G-10.07 PRIVATE PROPERTY
The Contractor shall so conduct the work that no equipment, material, or debris will be placed or allowed to fall upon private property in the vicinity of the work unless he shall have obtained the owner's written consent thereto and shall have shown this consent to the Engineer.

SECTION 11
SLEEVES AND INSERTS

G-11.01 COORDINATION
When the Contract requires the placing of conduits, saddles, boxes, cabinets, sleeves, inserts, foundation bolts, anchors, and other like work in floors, roofs, or walls of buildings and structures, they shall be promptly installed in conformity with the construction program. The Contractor who erects the floors, roofs, and walls shall facilitate such work by fully cooperating with the Contractors responsible for installing such appurtenances. The Contractor responsible for installing such appurtenances shall arrange the work in strict conformity with the construction schedule and avoid interference with the work of other contractors.

G-11.02 OPENINGS TO BE PROVIDED
In the event timely delivery of sleeves and other materials cannot be made and to avoid delay, the affected Contractor may arrange to have boxes or other forms set at the locations where the appurtenances are to pass through or into the floors, roofs, walls, or other work. Upon the subsequent installation of these appurtenances, the Contractor erecting the structure shall fill around them with materials as required by the Contract. The necessary expenditures incurred for the boxing out and filling in shall be borne by the Contractor or Contractors required to furnish the sleeves and inserts. Formed openings and later installation of sleeves will not be permitted at locations subject to hydrostatic pressure.

SECTION 12
CUTTING AND PATCHING

G-12.01 GENERAL
The Contractor shall do all cutting, fitting, or patching of his portion of the work that may be required to make the several parts thereof join and coordinate in a manner satisfactory to the Engineer and in accordance with the Plans and Specifications. The work must be done by competent workmen skilled in the trade required by the restoration.

SECTION 13
CLEANING

G-13.01 DURING CONSTRUCTION
During construction of the work, the Contractor shall, at all times, keep the site of the work and adjacent premises as free from material, debris, and rubbish as is practicable and shall remove the same from any portion of the site if, in the opinion of the Engineer, such material, debris, or rubbish constitutes a nuisance or is objectionable.

The Contractor shall remove from the site all of his surplus materials and temporary structures when no further need therefor develops.

G-13.02 FINAL CLEANING
At the conclusion of the work, all erection plant, tools, temporary structures and materials belonging to the Contractor shall be promptly taken away, and he shall remove and promptly dispose of all water, dirt, rubbish or any other foreign substances.

The Contractor shall thoroughly clean all equipment and materials installed by him and shall deliver such materials and equipment undamaged in a bright, clean, polished, and new appearing condition.

SECTION 14
MISCELLANEOUS

G-14.01 PROTECTION AGAINST SILTATION AND BANK EROSION
The Contractor shall arrange his operations to minimize siltation and bank erosion on construction sites and on existing or proposed watercourses and drainage ditches.

G-14.02 EXISTING FACILITIES
The work shall be so conducted to maintain existing facilities in operation insofar as is possible. Work shall be scheduled to minimize bypassing during construction. Requirements and schedules of operations for maintaining existing facilities in service during construction shall be as described in the Special Provisions.

G-14.03 USE OF CHEMICALS
All chemicals used during project construction or furnished for project operation, whether herbicide, pesticide, disinfectant, polymer, reactant or of other classification, must show approval of either EPA or USDA. Use of all such chemicals and disposal of residues shall be in strict conformance with instructions.

* * * * * * *

SPECIFIC PROVISIONS

SP-1.G Scope

The work included under these Contract Documents is described in the Proposal.

The Contractor shall furnish all labor, materials and equipment for the accomplishment of all work as described in the Specifications, as shown on the Plans and as directed by the Engineer in accordance with the obvious or expressed intent of the Contract.

SP-2.TP Permits

The Contractor shall have in his possession the proper license to perform the work before submittal of his bid and shall obtain any required City/County building permits and shall obtain and pay for all other licenses and authorizations required for the prosecution of the work, including the cost of all work performed in compliance with the terms and conditions of such permits, licenses and authorizations, whether by himself or others.

City permit fees will be paid by the City.

The Contractor shall require all subcontractors to be currently licensed by the City to perform the proposed work in their respective fields and to obtain permits for the execution of said work. All work shall be performed in accordance with the licenses, permits and the requirements of the current Building and Construction Regulations Chapter of the City of Tampa Code.

The Contractor is responsible to schedule and coordinate with the City Inspectional Services Division of the Department of Housing and Development Coordination all required inspections and tests for all phases of work to obtain final approval thereof.

The Contractor is encouraged to contact the City's Permitting Department and Building Inspections Bureau prior to commencement of work to ascertain their respective requirements.

SP-5 Working Drawings

Prior to performing any work requiring working drawings, as specified on the Plans and in the Workmanship and Materials Sections, the Contractor shall submit the working drawings in accordance with the General Provisions section headed "Working Drawings."

SP-6 Environmental Protection

The Contractor will be held liable for the violation of any and all environmental regulations. Violation citations carry civil penalties and in the event of willful violation, criminal penalties. The fact that the permits are issued to the City does not relieve the Contractor in any way of his environmental obligations and responsibilities.

SP-8 Construction Start

Construction will not begin prior to receipt by the City of the required permits. If issuance of the Notice to Proceed is delayed due to permit acquisition, the contract time will be extended to suit, but no extra payment will be made to the Contractor.

SP-9 Coordination and Cooperation

In performing work under this Contract, the Contractor shall coordinate his work with that of any adjacent contractors for the City, and others, and cooperate with them in every reasonable way, to the end that there shall be the minimum practicable interference with their operations.

SP-12 Releasing Facilities for Use

It is the intent of these Specifications that all newly constructed sewers and appurtenant facilities be placed in service as rapidly as an integrated portion of the facilities can be constructed, inspected and accepted by the Engineer. Acceptance or use by the City of any portion of the facilities prior to final acceptance shall not relieve the Contractor of any responsibilities, regarding such facilities, included in the Contract.

SP-13 Material and Equipment Approval

The Contractor shall not enter into any subcontracts, or place any order, for the furnishing of any material or equipment until he has received the Engineer's written approval of the manufacturers.

SP-14 Contractor Emergency Response Time

The Contractor must be available to service emergency calls seven (7) days a week, twenty-four (24) hours a day. The response time for emergency calls shall be within two (2) hours. A contact person and telephone number shall be provided to the Engineer for such purposes.

SP-15 Contractor's Field Office

Delete Article G-6.03 Contractor's Field Office on Page G-14 from GENERAL PROVISIONS. The Contractor or an authorized agent shall be present at all times while his work is in progress. Readily accessible copies of both the contract documents and the latest approved working drawings shall be kept at the job site.

SP-16 Salvage

All existing transformers, conduit and conductors removed by the Contractor shall become the property of the Contractor and shall be removed from the site of the work to the Contractor's own place of disposal.

Items which are shown on the Plans or specified to be salvaged shall be removed by the Contractor, delivered, and unloaded at a location within the Department’s service area, as directed by the Engineer. The cost of removing, disposing, delivering, and unloading as salvage items of pipe and appurtenances shall be included in the various classified unit price Contract Items or in the total Lump Sum Price, as applicable, and no separate payment will be made therefor.

SP-17 Sequence of Operations

The Contractor shall develop with the Engineer a complete schedule of operations which, in the opinion of the Engineer, will permit use of the facility at the earliest possible date.

Taking over of parts of the work for operation before completion of the entire project shall not relieve the Contractor of any responsibility for proper integrated operations of all parts of the work, nor shall it act to relieve him of any

responsibilities under Article A-6.04 of the Agreement, for guaranty of all parts of the work, for one year after the date of acceptance of all the work on the project.

SP-23 Project Cleanup

Cleanup is extremely important and the Contractor will be responsible for keeping the construction site neat and clean with debris to be removed regularly as the work progresses.

SP-60 Contingency

The Contractor shall include a Ten Thousand Dollar ($10,000) contingency sum, to be included as part of the total bid amount for this contract. The contingency is for the purpose of compensating the Contractor for any incidental work that may arise as construction operations proceed and was not addressed as part of the original work portrayed in the Plans and Specifications.

The Ten Thousand Dollar ($10,000) contingency sum is an upset limit. Any amount of the contingency shall be paid only after negotiation.

SP-67 Interruption of Service

Because of the nature of the work, it is imperative that the treatment plant power grid not be interrupted at any time. The Contractor shall give 72 hours (minimum) prior notice to the City and shall arrange to have treatment plant electrical personnel present when making any connections to, or disconnections from, the existing electrical and/or control systems.

SP-68 Water, Light and Power

Delete Article G-7.01 Water and G-7.02 Light and Power on Page G-14 from GENERAL CONDITIONS. The City currently provides water and electrical power facilities to the sites. The Contractor may use the electrical and water sources as presently configured. If necessary to modify, extend, or relocate either the electrical or water facilities to facilitate construction, all costs shall be the responsibility of the Contractor.

SP-70 Electrical Equipment Certification

All equipment and materials shall be UL listed or listed and labeled as complying with the requirements of a Southern Building Code Congress International, Inc. (SBCCI) recognized testing laboratory, for the particular application, whenever available.

An electrical/mechanical system that is not available as a standard UL listed assembly (e.g. industrial equipment of unique configuration or custom design) shall be composed of listed components, whenever they are available, and constructed in accordance with the design documents, and the latest nationally recognized industry standards. The Contractor shall certify in writing that the equipment satisfies the above requirements and that it has been installed in compliance with the latest edition of the National Electrical Code (NEC) and Chapter 5 of the City of Tampa Code.

The Contractor shall secure all required permits and arrange for progress and final inspections as the work develops.

SP-71 Electrical Work

Where definite requirements are not set forth in the Specifications, all electrical equipment, materials, and work

under this Division shall comply with the requirements of the Occupational Safety and Health Act (OSHA) and shall be in accordance with applicable ANSI, IEEE, IPCEA, and NEMA standards. The work shall be performed in compliance with the latest issue of the NEC, all applicable state and municipal regulations and codes, and the service rules of the Tampa Electric Company, unless otherwise specified or directed. All equipment and materials shall be listed and labeled as complying with the requirements of a Southern Building Code Congress International (SBCCI) recognized testing laboratory for the particular applications wherever available.

Where listing is not available for the device as a whole, refer to the provision entitled "Electrical Equipment Certification" for submittal requirements.

SP-72 Operation and Maintenance Manual, Submittals / Request for Information / Shop Drawings, and Asset Tracking Form

Operation and Maintenance Manuals

The Contractor shall prepare and submit to the Engineer four (4) hardcopies and one (1) high resolution color, bookmarked, and unsecured electronic portable document format (PDF) of an Operation and Maintenance Manual for all equipment and associated control systems furnished and installed under this Contract. Black and white copies will not be accepted. When the work reaches 75 to 80 percent completion, the Contractor shall submit to the Engineer for approval one (1) hardcopy and one (1) PDF electronic copy of the manual with all specified material that is available at that time. The submittal shall accompany the Contractor's partial payment request for the specified completion. Within 30 days after approval of the Engineer of the PDF submittal, the Contractor shall furnish to the Engineer four (4) hardcopies of the manual. Appropriate space shall be left in the manual for material not available at the time of submittal. All missing material for the manual shall be submitted prior to the request for final payment.

Also along with the missing material submitted with the request for final payment, one electronic copy (in pdf format) complete with all the missing material to be included in the earlier submitted hard copies shall be submitted. The manual shall be prepared and arranged as follows:

1. Space shall be provided in the manual for a reduced set of record Contract Drawings, size approximately 11 by 17 inches and folded to 8-1/2 by 11 inches. Drawings will be furnished by the Engineer.

2. One copy of all approved shop drawings and diagrams for all equipment furnished. The shop drawings and diagrams shall be reduced to either 8-1/2 by 11 inches or to 11 inches in the vertical dimension and as near as practicable to 17 inches in the horizontal dimension. Such sheets shall be folded to 8-1/2 by 11 inches.

3. One copy of manufacturer's operating, lubrication and maintenance instructions for all equipment and controls furnished. All equipment operating, lubrication and maintenance instruction and procedures shall be furnished on 8-1/2 by 11 inch commercially printed or typed forms. Such forms shall include equipment name, serial number and other identifying references.

4. One copy of manufacturer's spare parts list for all equipment furnished and prepared as specified in No. 3 above.

5. One valve schedule, giving the valve number, location, fluid and fluid destination for each valve installed and prepared as specified in No. 3 above. All valves in the same piping system shall be grouped together in the schedule. A sample of the valve numbering system to be used will be furnished by the Engineer. Valve numbers may include three or four numerals and a letter.

6. List of electrical relay settings and control and alarm contact settings.

Each copy of the manual shall be assembled in one or more binders, each with title page, typed table of contents, and heavy section dividers with copper reinforced holes and numbered plastic index tabs. Each manual shall be divided into sections headed by the equipment specification section included in "Workmanship and Materials." Binders shall be 3-ring hard-back. All data shall be punched for binding and composition and printing shall be arranged so that punching does not obliterate any data. The cover and binding edge of each manual shall have the project title, Division designation and manual title printed thereon, all as furnished and approved by the Engineer.

Where more than one binder is required, they shall be labeled Vol. 1, Vol. 2, and so on. The table of contents for the entire set, identified by volume number, shall appear in each binder.

The four (4) hardcopies of the manuals and data included therein shall be provided in conformance with the subsection headed "Working Drawings" and, in addition, to the requirements of the General Provisions. The costs of the Operation and Maintenance Manual shall be included in the various Contract Items, or in the total Lump Sum Price, as applicable, and no separate payment will be made therefor.

Submittals / Request for Information / Shop Drawings

Contractor shall prepare and submit a minimum four (4) hardcopies and one (1) bookmarked, unsecured electronic portable document format (PDF) file for all Submittals, RFI, and Shop Drawings. The City will review the submittals and return one (1) hardcopy and PDF file of the marked up submittal to the contractor. The contractor shall have approved hard copies of all submittals at the job site. Each electronic submission must be in a high resolution color format and shall be original electronic documents from the manufacturer. Hardcopies shall be high quality printed in color. Scanned printouts or poor quality resolution PDF files will not be accepted.

Asset Tracking Form

The Asset Tracking Form (ATF) is a form that is intended to begin tracking assets and their respective preventative maintenance at an early stage in the project. The Contractor will be required to submit an electronic Asset Tracking Form for each piece of equipment. The information to be included on the form will include general information and specifications on the equipment such as, but not limited to, model, voltage, amperage, horsepower, material, manufacturer, serial number, recommended spare parts and preventative maintenance tasks.

During the preconstruction meeting of the project, the City will furnish the contractor with a blank electronic copy of the ATF in Microsoft Office 2010 and a preliminary list of equipment that will require an ATF. The City may provide the contractor a list of additional equipment requiring an ATF as the project progresses.

The Contractor shall submit all ATF(s) after the project is substantially complete. The City prefers one submission of all ATF(s).

SP-73 Work Directive Change

A Work Directive Change is a written directive to the Contractor, issued on or after the date of the execution of the Agreement, and signed by the Engineer on behalf of the City, ordering an addition, deletion or revision in the work, or responding to an emergency. A Work Directive Change will not change the contract price or the time for completion, but is evidence that the parties expect that the change directed or documented by an Authorization to Proceed with Extra Work letter will be incorporated in a subsequently issued Change Order following negotiations by the parties as to its effect, if any, on the contract price or the time for completion.

Without invalidating the Agreement, additions, deletions or revisions in the work may, at any time or from time to time, be authorized by a Change Order or a Work Directive Change. Upon receipt of any such document, the Contractor shall promptly proceed with the work involved.

SP-81 Services of Manufacturers' Representatives

The services of manufacturers' representatives shall be provided on the site as required for the supervision of installation, the adjustment and placing in satisfactory trouble-free operation of such equipment, and instructing City personnel in the operation and maintenance of such equipment for which such specialized services are specified, directed, or required.

Such manufacturers' services shall be of sufficient time and include a minimum period of one 8-hour day for instruction of City personnel. Additional time shall be provided if necessary.

The cost of all services of manufacturers' representatives shall be included in the various Contract Unit Price Items, or in the total Lump Sum Price, as applicable and no separate payment will be made therefor.

SP-82 Access

GENERAL

Access to the site of the work shall be from Guy Verger Boulevard. The Contractor shall construct, as required for his purposes or as necessary, such temporary access roads between the public roads and the site as may be required for movement of heavy construction equipment and material delivery vehicles at locations approved by the Engineer.

Access facilities shall be adequate for equipment movement and shall provide for surface drainage. Areas used for temporary access, haul roads and access from public or plant roads shall be graded and restored to proposed site grade conditions, all to the satisfaction of the Engineer.

Access to existing plant roads by the Contractor will be restricted to those roads so designated. The Contractor will not be permitted to use any existing plant roads not designated for such use. All existing plant roads which are designated for use by the Contractor shall be maintained in serviceable condition by the Contractor during construction. Any damage to such roads caused by construction operations shall be promptly repaired to keep the road in serviceable condition. Any accumulations of soil, gravel or any other debris deposited on such plant roads as a result of construction operations shall be promptly removed by the Contractor to his own place of disposal.

Additionally, all existing plant roads which are designated for use by the Contractor shall be open at all times for unrestricted use by plant operations, maintenance and inspection service.

In NO case will the Contractor be permitted to use the monitored plant entrances for the passage of heavy construction equipment, concrete trucks or any other large vehicles.

PARKING

All employees of the Contractor shall park personal vehicles within the Contractor's storage and field office site. Contractor employees will not be permitted to drive personal vehicle onto the construction site. The Contractor shall provide transportation for all employees between the Contractor's storage and field office site and the work areas on the construction site.

IDENTIFICATION

The Contractor shall provide a Photo I.D. card for each employee. Each photo I.D. card shall be encapsulated in plastic and be provided with a clip for fastening to each employee's apparel. Each photo I.D. card shall be approximately 2 inches by 3 inches in size and shall include the following:

1. Employee photograph mounted on the left half of the card.

2. Name of employee and name of Contractor located on the right half of the card.

Each employee shall display the photo I.D. card on outer apparel at all times when on the plant site.

Any person found on the site without the required photo I.D. card will be directed to leave the site immediately.

The cost of construction, modification, maintenance, removal and restoration of all access facilities, and existing plant roads including excavation, backfilling, select fill material, paving material, grading, drainage and other such work, and all costs associated with limited access to the site, employee parking and transportation and photo I.D. cards, except as specified otherwise shall be included in the lump sum Contract Item for Structures and Equipment and no separate payment will be made therefor.

SP-84 Piping and Equipment Identification

All piping and equipment shall be identified as follows:

1. All painted piping and equipment shall be color coded. Such coding on pipelines shall include painted or plastic tape banding at 10-foot intervals. The Engineer will select the colors. Underground pipelines with plastic tape wrapping shall be wrapped with colored tape and include additional colored bands as directed. Polyethylene or hot bituminous wrapped underground pipelines shall have plastic tape bands. Polyethylene wrapping for ductile iron sewage or force main piping shall be green. Tape bands shall be placed at 10-foot intervals and all colors shall be selected by the Engineer.

2. All equipment and slide gates shall have an identification nameplate. The nameplates shall be of Type 304 stainless steel, No. 6 finish, not less than No. 16 gauge with indented stamped lettering. Nameplates shall be attached to equipment bases in accessible locations. Nameplates shall be fastened, in a permanent manner arranged not to damage equipment, with not less than four stainless steel fasteners. All nameplates shall be of the same size (approximately 3- by 8-inch) and shall conform to the following standard sample:

Sewage Pump	(Name of item)
SC-P-1	(General type of designation, final list furnished by Engineer)
(12 digit number)	(Furnished by Engineer)

Lettering shall be block style in size and spacing to suit the nameplate. A sample nameplate including fastenings shall be submitted to the Engineer for approval prior to manufacture of any of the nameplates. Stainless steel identification nameplates shall not be painted.

3. Piping shall be identified with a designation and directional flow arrow. The designation will be furnished by the Engineer. The designation will comprise a maximum of 20 letters. The designations and flow arrows shall be painted on after completion of color coding using suitable stencils and colors. Designations and flow arrows shall be arranged to be clearly in view from the normal operating or access space all as directed and approved by the Engineer. Designations and flow arrows shall be located along straight runs at intervals of not more than 50 feet,

near valves, branches and junction points, and where pipes pass through walls or ceilings. Underground piping wrapped with polyethylene shall be provided with colored material selected by the Engineer.

The cost of piping and equipment identification shall be included in the various Contract Items, or in the total Lump Sum Price, as applicable, and no separate payment will be made therefor.

SP-87.TP Use of Site for Storage and Field Office

Space, on the site, for storage and field office for the Contractor shall be as directed by the Engineer. Any structures or facilities needed for storage or field office shall be constructed by the Contractor at his own expense and no separate payment will be made therefor. All security requirements for such facilities shall be provided and maintained by the Contractor.

Upon completion of the work, and as directed, the Contractor shall clean up the areas, remove any temporary facilities and finish grade as necessary, all as approved.

SP-91 Project Photographs

The Contractor will not be required to furnish photographs of the project; however, the Engineer may or may not take photographs of the area immediately prior to and after completion of the construction for record and information. To assure that there will not be any conflict with this photography, the Contractor shall not perform clearing operations or action which will disturb any street or area within the project until the Engineer has been advised thereof and has had adequate opportunity to perform the desired photography.

SP-129.TP As-Built Plans

During manufacture and construction, installation and testing, records shall be kept of any changes or adjustments made in the work. All such changes shall be incorporated in the "As-Built" plans, shown in red.

The Contractor shall provide the City of Tampa with one (1) hardcopy and (1) electronic high resolution color PDF copy of "As-Built" plans. Plan sheets shall have all deviations from original design annotated in red pencil to clearly show as-built conditions. Relocation of existing facilities and utilities must be clearly noted.

All as-built plans shall be submitted within seven (7) calendar days of the final inspection. The final payment will not be issued until the as-built plans have been submitted to, and accepted by the City. Upon request the City will provide AutoCAD drawings.

SP-130 SAFETY:

A. Responsibility: Employees shall immediately report any unsafe work practice or unsafe condition to their supervisor(s). The Contractor is solely responsible for the safety of their workers, and shall comply with all applicable requirements [i.e.: 29 CFR 1910 -Occupational Safety and Health Standards, 29 CFR 1926 - Safety and Health Regulations for Construction, etc] and industry safety standards while at the work site. The fact that City personnel may bring un-safe conditions to the attention of any member of the Contractors work force does not relieve the Contractor of this responsibility.

Suggest, all Contractors employees and sub-contractors be given a copy of SP-130.

The Contractor shall have a designated Safety Officer within his organization. At the Pre-Construction meeting, the Contractor shall provide the name and contact information of the Safety Officer to the Engineer.

At the Pre-Construction meeting, the Contractor will be given pertinent safety related information, necessary forms and instructions (i.e.: AWTP Lockout/Tagout Procedures, AWTP Hot Work Permits, etc) that pertain to any work that might be utilized during the contract. The Contractor shall be responsible to disseminate that information to their employees and sub-contractors. Special care shall be taken by the Contractor to ensure that any new employee or sub-contractor to the work site shall be briefed on these safety instructions.

If warranted by the project and directed by the Engineer, the Contractor shall develop and implement a comprehensive health and safety plan for their employees that will cover all aspects of onsite construction operations and activities associated with the contract. This plan must comply with all applicable health and safety regulations and any project specific requirements that the contract has specified.

B. Incident Reporting: All accidents that result in personal injury, illness or property damage shall be immediately reported and investigated, regardless of the extent of injury, illness or property damage. Employees must report accidents within one hour (or as soon as practical) from the time of occurrence to their immediate supervisor who in turn will report it to the City's inspector. The City inspector will record the incident in their daily report and report it to the Risk Management Division (274-5708).

C. Air-Borne Debris: All personnel in close proximity to drilling, sawing, sanding, scraping, spraying, power-washing or other work being done, either in enclosed spaces or in the open, that creates dust or air-borne debris shall wear eye protection
[29 CFR 1910.133] and a respirator [29 CFR 1910.134].

D. Hot Work: All welding, soldering, brazing, acetylene cutting or any other work at the AWTP or any pump station; that produces high temperatures shall require a AWTP "Hot Work Permit" and may require one or more fire watches. The number and location of fire watches (if any) shall be a condition of the Hot Work Permit. A current, portable, fully charged fire extinguisher shall be located with each person performing hot work and each fire watch. The Hot Work Permit shall be signed off by the appropriate personnel and maintained in the project file.

E. Confined Spaces: OSHA defines a confined space as having limited or restricted means for entry or exit, and is not designed for continuous employee occupancy. Confined spaces include, but are not limited to: vaults, tanks, manholes, wet-wells, pipelines, utility tunnels, etc.

The Contractor shall take measures [29 CFR 1910.146 (c)(5)] to ensure that atmospheric conditions in confined spaces are not hazardous to occupants. This can be accomplished by forcing a sufficient amount of clean air through the confined space and testing the atmosphere by using a portable certified, calibrated, atmosphere monitor that meets OSHA requirements [29 CFR 1910.146(c)(5)(ii)(C)]. The atmosphere monitor should record oxygen content, flammable gases and vapors and toxic air contaminants, such as the Industrial Scientific TMX-412.

F. Air-Borne Gases: The AWTP is located in an industrial area and as such there are several different substances, either on or off site, that can escape and become dangerous fumes such as: chlorine, methanol, anhydrous ammonia, etc. The AWTP currently has nine (9) Shelter In Place (SIP) locations that are designated as safe havens in the event of release of hazardous gases. These SIP's are stocked with necessary instructions and supplies to protect City and any Contractor's personnel.

The first day on site, City personnel will show all the Contractor's personnel present where the several closest SIP's are located, explain the alarm signals and provide the current alarm testing schedule. It shall be the

Contractor's responsibility to show any future employee and/or sub-contractor that comes on site the location of the SIP's and explain the alarm signals.

In the event of an alarm, the Contractor's personnel shall immediately and hastily proceed to the nearest SIP along with the City personnel and remain there until further notice, taking guidance from and following the instruction of the senior City employee present.

G. Lockout / Tagout Policy: The AWTP Lockout / Tagout program is designed to set standards to help safeguard all employees from hazardous electrical or mechanical energy while they are performing service or maintenance on machines and equipment at the AWTP or any pump station. This program will also identify the practices and procedures to shut down and Lockout or Tagout machines and equipment. The Contractor shall be given a copy of the AWTP "LOCKOUT / TAGOUT POLICY AND PROCEDURES" instruction and shall make all of his employees and sub-contractors aware of this program.

No padlock (lockout) shall be removed except by the individual that installed it or if not available, by a City of Tampa AWTP team leader.

No tag (tagout) shall be removed except by the individual that installed it or if not available, by a City of Tampa AWTP team leader, except in an Emergency and the tag states "Do Not Use Unless in an Emergency". In that event, the Contractor shall notify the City of Tampa AWTP team leader, who will prepare the necessary follow up report.

H. Trench Safety: Any excavation deeper than four (4) feet shall adhere to the requirements contained in 29 CFR 1926.650 thru 652 and the Florida Trench Safety Act [Florida Statutes, ss 553.60 - 553.64].

I. Open Flames: No fires shall be allowed. No open flames necessary for any construction activity shall ever be left un-attended. A current, portable, fully charged fire extinguisher shall be located with each activity requiring an open flame.

J. Sparks: Any activity lasting more than 10 continuous minutes, that creates sparks, such as grinding or chipping shall have a dedicated fire watch in attendance. A current, portable, fully charged fire extinguisher shall be located with each activity creating sparks, regardless if a fire watch is required or not.

K. First Aid: The Contractor shall furnish appropriate First Aid Kits [29 CFR 1910.151] and shall be responsible to ensure his employees are properly trained to render first aid. If injurious corrosive materials are to be utilized, eye wash and body wash facilities must be provided in the immediate area.

L. Related Costs: All costs associated with these or any safety measures shall be included in the total lump sum contract price or the various contract item unit prices, as applicable, and no separate payment shall be made thereof.

SP-133 Tampa Port Authority Access

The Tampa Port Authority has restricted access in accordance with Florida Statute 311.12. Procedures for Tampa Port Authority access are available at http://tampaport.com/Port-Operations/Security. All costs to comply with these procedures shall be included in the total price for this project, and no separate payment shall be made therefore.

End of Section

City of Tampa – DMI Sub-(Contractors/Consultants/Suppliers) Payments

(FORM MBD-30)

[ ] Partial [ ] Final

Contract No.: _____ WO#,(if any):_____ Contract Name:_____

Contractor Name:_____ Address:_____

Federal ID:_____ Phone:_____ Fax:_____ Email:_____

GC Pay Period:_____ Payment Request/Invoice Number:_____ City Department:_____

Total Amount Requested for pay period: $_____ Total Contract Amount(including change orders):$_____

-Type of Ownership - (F=Female M=Male), BF BM = African Am., HF HM = Hispanic Am., AF AM = Asian Am., NF NM = Native Am., CF CM = Caucasian S = SLBE

Type Trade/Work Activity []Sub []Supplier Federal ID	Company Name Address Phone & Fax	Total Sub Contract Or PO Amount	Amount Paid To Date Amount Pending Previously Reported	Amount To Be Paid For This Period Sub Pay Period Ending Date
			$	$
			$	$
			$	$
			$	$
			$	$
			$	$

(Modifying This Form or Failure to Complete and Sign May Result in Non-Compliance)

Certification: I hereby certify that the above information is a true and accurate account of payments to sub – contractors/consultants on this contract.

Signed:_____ Name/Title:_____ Date:_____

 Note: Detailed Instructions for completing this form are on the next page

Page 2 of 2 – DMI Payment

Instructions for completing The DMI Sub-(Contractors/Consultants/ Suppliers) Payment Form

(Form MBD-30)

This form must be submitted with all invoicing or payment requests where there has been subcontracting rendered for the pay period. If applicable, after payment has been made to the subcontractor, "Waiver and Release of Lien upon Progress Payment", "Affidavit of Contractor in Connection with Final Payment", or an affidavit of payment must be submitted with the amount paid for the pay period. The following will detail what data is required for this form. The instructions that follow correspond to the headings on the form required to be completed. **(Modifying or omitted information from this form my result in non-compliance).**

- **Contract No.** This is the number assigned by the City of Tampa for the bid or proposal.
- **W.O.#** If the report covers a work order number (W.O.#) for the contract, please indicate it in that space.
- **Contract Name.** This is the name of the contract assigned by the City of Tampa for the bid or proposal.
- **Contractor Name.** The name of your business.
- **Address.** The physical address of your business.
- **Federal ID.** A number assigned to a business for tax reporting purposes.
- **Phone.** Telephone number to contact business.
- **Fax.** Fax number for business.
- **Email.** Provide email address for electronic correspondence.
- **Pay Period.** Provide start and finish dates for pay period. (e.g. 05/01/13 – 05/31/13)
- **Payment Request/Invoice Number.** Provide sequence number for payment requests. (ex. Payment one, write 1 in space, payment three, write 3 in space provided.)
- **City Department**. The City of Tampa department to which the contract pertains.
- **Total Amount Requested for pay period.** Provide all dollars you are expecting to receive for the pay period.
- **Total Contract Amount (including change orders).** Provide expected total contract amount. This includes any change orders that may increase or decrease the original contract amount.
- **Signed/Name/Title/Date**. This is your certification that the information provided on the form is accurate.
- **See attached documents.** Check if you have provided any additional documentation relating to the payment data. Located at the bottom middle of the form.
- **Partial Payment.** Check if the payment period is a partial payment, not a final payment. Located at the top right of the form.
- **Final Payment.** Check of this period is the final payment period. Located at the top right of the form.

The following instructions are for information of any and all subcontractors used for the pay period.

- **(Type) of Ownership.** Indicate the Ethnicity and Gender of the owner of the subcontracting business or SLBE.
- **Trade/Work Activity.** Indicate the trade, service, or material provided by the subcontractor.
- **SubContractor/SubConsultant/Supplier.** Please indicate status of firm on this contract.
- **Federal ID.** A number assigned to a business for tax reporting purposes. This information is critical in proper identification of the subcontractor.
- **Company Name, Address, Phone & Fax**. Provide company information for verification of payments.
- **Total Subcontract Amount.** Provide total amount of subcontract for subcontractor including change orders.
- **Amount Paid To Date.** Indicate all dollars paid to date for the subcontractor.
- **Amount Pending, Previously Reported.** Indicate any amount previously reported that payments are pending.
- **Amount To Be Paid for this Period.** Provide dollar amount of dollars requested for the pay period.
- **Sub Pay Period Ending Date.** Provide date for which subcontractor invoiced performed work.

Forms must be signed and dated or will be considered incomplete. The company authorized representative must sign and certify the information is true and accurate. Failure to sign this document or return the document unsigned can be cause for determining a company is in non-compliance of Ordinance 2008-89.

If any additional information is required or you have any questions, you may call the Minority Business Development Office at (813) 274-5522.

SIGN EXAMPLE ONLY GRAPHIC TO BE DEVELOPED BY CONTRACTOR

scale: 3" 3"

Sign Information

Building a Better Tampa

Downtown Riverwalk

Creates a waterfront pedestrian walkway connecting the south edge of the CapTrust building with MacDill Park.

$1.5 Million investment
Scheduled for completion in October 2012

Orion Marine
Construction, Inc.

Colors

Blue: Sherwin Williams Naval SW6244
Green: Sherwin Williams Center Stage SW6920
White: Sherwin Williams Pure White SW7005

Font

Franklin Gothic

K:\CA\edr\dpw project sign 4-28-04.dwg, 08/22/2005 12:32:38 PM, pw1m

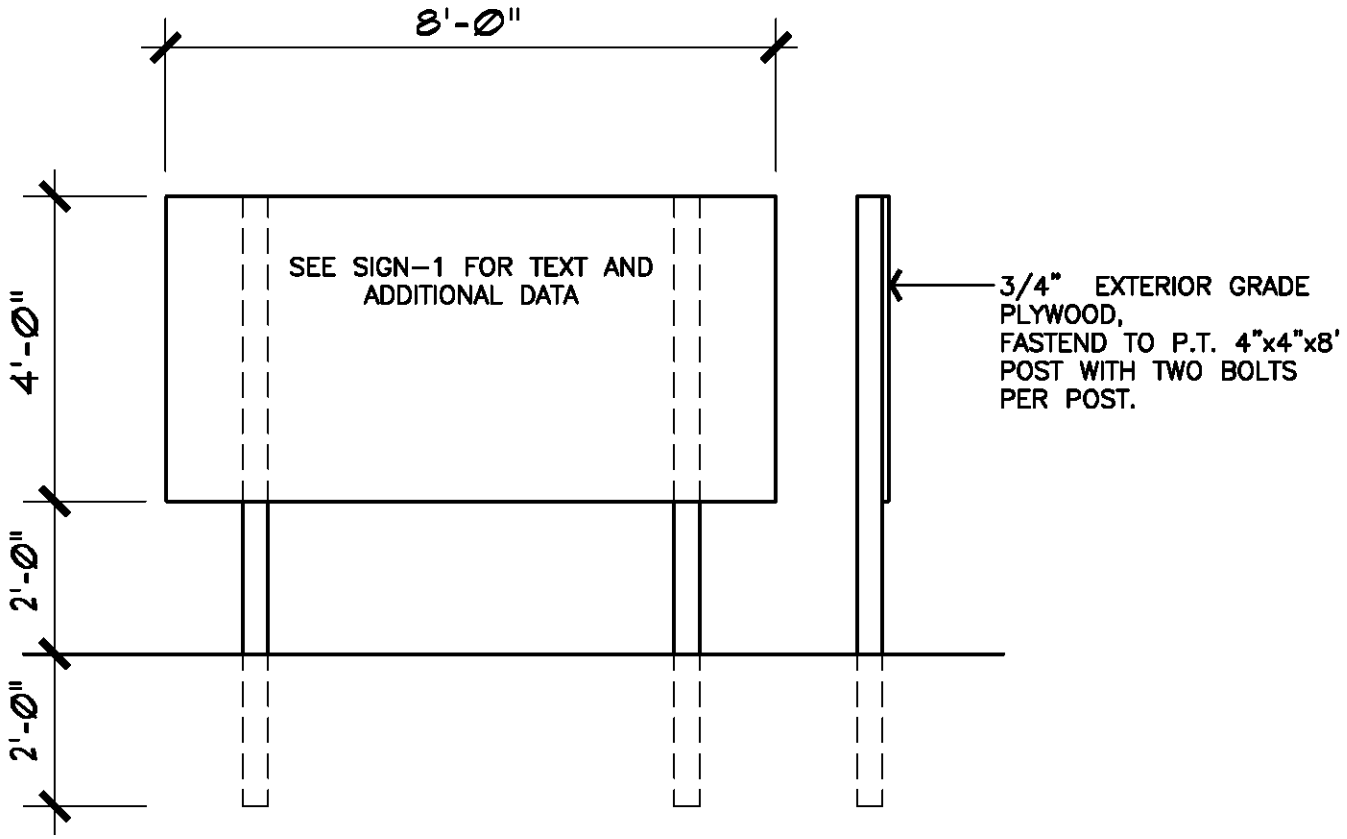

CITY OF TAMPA–PROJECT SIGN
REVISED 4/28/04

SIGN – 2

SECTION 16050

ELECTRICAL – GENERAL PROVISIONS

PART 1 - GENERAL

1.01 SCOPE OF WORK

A. Furnish all labor, materials, equipment, transportation and performing all operations required to support the installation and commissioning of the Howard F. Curren AWTP Primary Sludge Pumping Station Motor Control Center (MCC) replacement. The work includes, but is not limited to, the following:

1. Demolish and remove the existing Primary Sludge Pumping Station Motor Control Center (MCC-20).

2. Replace the existing 600A, 480V, 3-phase, 3-wire, Motor Control Center (MCC-20) with a new Motor Control Center of similar specifications.

3. Demolish and remove an existing 480V-120/208V, three-phase 9 KVA transformer.

4. Provide and install a new 480V-120/208V, three-phase 15 KVA transformer.

5. Demolish and remove an existing 120/208V, three-phase, 4-wire, panelboard.

6. Provide and install a new 120/208V, three-phase, 4-wire, 60 ampere main circuit breaker panelboard ‘LP’.

7. Demolish and remove an existing 480V, single-phase, 20A enclosed circuit breaker.

8. Demolish and remove an existing 277/480V, three-phase, 4-wire panelboard.

9. Provide and install a new 277/480V, three-phase, 4-wire, 30 ampere main circuit breaker panelboard ‘LPO’.

10. Demolish and remove an existing 277/480V, lighting control cabinet.

11. Provide and install a new 480V, 4-pole, 30 ampere lighting control cabinet ‘C1’.

12. Demolish and remove an existing air compressor.

13. Demolish and remove existing 8’ and 4’ fluorescent lighting fixtures. Demolish and remove all conduit and conductors associated with the fluorescent lighting fixtures.

14. Provide and install new 4’ fluorescent lighting fixtures within the interior of the Primary Sludge Pumping Station. Provide and install new conduit and conductors for the fluorescent lighting fixtures.

15. Demolish and remove existing wallpack lighting fixtures. Demolish and remove all conduit and conductors associated with the wallpack lighting fixtures.

16. Provide and install new wallpack lighting fixtures on the exterior of the Primary Sludge Pumping Station. Provide and install new conduit and conductors for the wallpack lighting fixtures.

17. Demolish and remove existing light switches as indicated on the drawings. Demolish and remove all conduit and conductors associated with the light switches.

18. Provide and install new light switches within the interior of the Primary Sludge Pumping Station. Provide and install new conduit and conductors for the light switches.

19. Demolish and remove existing receptacles as indicated on the drawings. Demolish and remove all conduit and conductors associated with the receptacles.

20. Provide and install new receptacles within the interior of the Primary Sludge Pumping Station. Provide and install new conduit and conductors for the receptacles.

21. Remove existing conductors between existing MCC-62A (located within Sludge Control Building A) and existing MCC-20 (located within the Primary Sludge Pumping Station). After conduit cleaning and integrity check, install new conductors as indicated on the drawings.

22. Remove existing starter cabinet and pushbutton controls for each longitudinal collector and cross collector as indicated on the drawings. Remove all associated conduit and conductors.

23. Provide new pushbutton control station for each longitudinal collector and cross collector as indicated on the drawings. Provide new conduit and conductors as indicated.

24. Remove existing 480V conductors for : existing Sludge Pump No. 1 (and associated controls); Sludge Pump No. 2 (and associated controls); Exhaust Fan; Scum Gate motor operated valve; and Slide Gates 1G, 2G, 3G and 4G. After conduit cleaning and integrity check, install new conductors as indicated on the drawings.

25. Remove existing control stations and junction boxes for Sludge Pump No. 1 and Sludge Pump No. 2 and replace with new as indicated on the drawings.

26. Remove existing ground system ground rods and install new grounding grid system.

27. Demolish and replace miscellaneous conductors/conduits as indicated on the drawings.

28. Provide and install new conductors and conduit (as required) for new I/O points required for the existing SCADA system. All conductors at the existing SCADA RTU shall be terminated by the City of Tampa.

B. The work, apparatus and materials, which shall be furnished under these Specifications and accompanying Drawings, shall include all items listed hereinafter and/or shown on the Drawings. All materials necessary for the complete installation shall be furnished and installed by the CONTRACTOR to provide complete power, instrumentation, wiring and control systems as indicated on the Drawings and/or as specified herein.

C. The CONTRACTOR shall furnish and install the necessary cables, protective devices, conductors, supports, raceways, exterior electrical system, etc., to serve loads as indicated on the Drawings and/or as specified.

D. The work shall include complete testing of all equipment and wiring at the completion of the work and making any minor connection changes or adjustments necessary for the proper functioning of the system and equipment. All workmanship shall be of the highest quality; sub-standard work will be rejected.

E. It is the intent of these Specifications that the electrical system shall be suitable in every way for the service required. All material and all work, which may be reasonably implied as being incidental to the work of this Section, shall be furnished at no extra cost.

F. Furnish and install a complete system of conduit as herein specified and shown on the drawings.

G. Submit working drawings, parts schedules, cut-sheets, maintenance items to be performed and written testing protocol to the Engineer.

1.02 CODES, INSPECTION AND FEES

A. All material and installation shall be in accordance with the latest edition of the National Electrical Code and all applicable national, local and state codes, laws and ordinances.

1.03 TESTS

A. Test all systems and repair or replace all defective work. Make all necessary adjustments to the systems and instruct OWNER's personnel in the proper operation of the systems.

B. The minimum tests required shall be as indicated in Section 16080 of the specifications.

C. The Engineer shall be notified forty-eight (48) hours before tests are made to enable the Owner to have designated personnel present.

1.04 CUTTING AND PATCHING

A. All cutting and patching shall be done in a thoroughly workmanlike manner.

1.05 INTERPRETATION OF DRAWINGS

A. The Drawings are not intended to show exact locations of conduit runs.

B. Each three-phase circuit shall be run independently, in a separate conduit. No conduit shall contain more than one (1) three-phase circuit.

C. Unless otherwise approved by the Engineer, conduit shown exposed shall be installed exposed; conduit shown concealed shall be installed concealed.

D. Where circuits are shown as "home-runs," all necessary fittings and boxes shall be provided for a complete raceway installation.

E. The locations of equipment, outlets, and similar devices shown on the Drawings are approximate only. Exact locations shall be as approved by the Engineer during construction. Obtain in the field all information relevant to the placing of electrical work and in case of any interference with other work, proceed as directed by the Engineer and furnish all labor and materials necessary to complete the work in an approved manner.

F. Circuit layouts shown are not intended to show the number of fittings, or other installation details. Furnish all labor and materials necessary to install and place in satisfactory operation all power, lighting, and other electrical systems shown. Additional circuits shall be installed wherever needed to conform to the specific requirements of the equipment.

G. The ratings of motors and other electrically operated devices together with the size shown for their branch circuit conductors and conduits are approximate only and are indicative of the probable power requirements insofar as they can be determined in advance of the purchase of equipment.

H. All connections to equipment shall be made as shown, specified and directed and in accordance with the approved shop drawings, regardless of the number of conductors shown on the Electrical Drawings.

1.06 RECORD DRAWINGS

A. As the work progresses, legibly record all field changes on a set of project Contract Drawings. When the project is complete, furnish a complete set of reproducible "As-built" drawings for the Project Record Documents.

1.07 COMPONENT INTERCONNECTIONS

A. Component equipment furnished under this Specification will not be furnished as integrated systems.

B. Analyze all systems components and their shop drawings; identify all terminals and prepare drawings or wiring tables necessary for component interconnection.

1.08 SHOP DRAWINGS

A. As specified under other Sections, shop drawings shall be submitted for approval for all materials, equipment, apparatus, and other items as required by the Engineer.

B. Prior to submittal by the CONTRACTOR, all shop drawings shall be checked for accuracy and contract requirements. Shop drawings shall bear the date checked and shall be accompanied by a statement that the shop drawings have been examined for conformity to Specifications and Drawings. This statement shall also list all discrepancies with the Specifications and Drawings. Shop drawings not so checked and noted shall be returned.

C. The Engineer's check shall be only for conformance with the design concept of the project and compliance with the Specifications and Drawings. The responsibility of, or the necessity of, furnishing materials and workmanship required by the Specifications and Drawings, which may not be indicated on the shop drawings, is included under the work of this Section.

D. The responsibility for all dimensions to be confirmed and correlated at the job site and for coordination of this work with the work of all other trades is also included under the work of this Section.

E. No material shall be ordered or shop work started until the Engineer's approval of shop drawings has been given.

1.09 WARRANTY

A. Provide a warranty for all the electrical equipment in accordance with the requirements of other Sections. Under no circumstances shall the warranty be for less than one year starting from substantial completion.

PART 2 – PRODUCTS (Not Used)

PART 3 – EXECUTION (Not Used)

END OF SECTION

SECTION 16060

GROUNDING

PART 1 GENERAL

1.1 SUMMARY

A. Section Includes: Requirements for providing a complete grounding system as specified and shown. Grounding includes but is not limited to: electric equipment enclosures, transformers, motor control centers, ground grid systems, grounding rods, grounding conductors, bonding jumpers, water pipe connections, and structure metal frames as required.

B. Related Work Specified in Other Sections Includes:

1. Section 16050 - Basic Electrical Materials and Methods
2. Section 16110 – Conduit, Wiring and Grounding
3. Section 16080 - Electrical Testing Requirements

1.2 REFERENCES

A. Codes and Standards: The following codes and standards are referred to in this Section:

1. NEC - National Electrical Code

1.3 SUBMITTALS

A. General: Furnish all submittals, including the following, as specified in the Specific/General Provisions.

B. Product Data and Information: Furnish manufacturer's catalog data for the following:

1. Grounding and grounded conductors
2. Grounding connectors, clamps and bushings
3. Grounding rods
4. Bonding jumpers

C. Shop Drawings: Furnish shop drawings showing the locations and length of grounding rods. Label the size and material used for grounding rods. Furnish details pertaining to grounding electrode conductors, grounding and grounded conductors, grounding connections and the ground grid.

D. Quality Control: Furnish a field report of the system ground impedance test results.

1.4 QUALITY ASSURANCE

A. Codes and Standards: Construct a complete grounding system in accordance with applicable ANSI, IEEE Standards and the NEC and local codes.

1.5 DELIVERY, STORAGE AND HANDLING

A. General: Deliver, store and handle all products and materials as specified in the Specific/General Provisions.

PART 2 PRODUCTS

2.1 MANUFACTURERS

A. Acceptable Manufacturers: Acceptable manufacturers are listed below. Other manufacturers of equivalent products may be submitted for review.

1. Grounding and Grounded Conductors

   a. American Insulated Wire Corporation

   b. Southwire Company

2. Grounding Rods

   a. Harger Lightning Protection, Inc.

   b. Thomson Industries, Inc.

   c. Carolina Galvanizing Utility Products Division

   d. Erico Products

   e. Superior Grounding Systems

2.2 MATERIALS

A. General: Provide conductor sizes as shown or required.

B. Materials: Provide conductors in accordance with the requirements specified in Section 16110.

C. Bare conductors: Provide bare copper conductor where buried in earth, embedded in concrete or exposed.

D. Insulated Conductors: Provide copper conductor with green color insulation rated at 600 volts where installed in conduits or other enclosed raceways.

2.3 CONNECTORS

A. Grounding Clamps and Bolted Connectors: Provide grounding clamps and bolted connectors as indicated on the drawings.

B. Welding: Provide the exothermic welding process for buried, concealed and accessible connections to structural members, ground rods, and case grounds.

Clean and paint welds embedded in the ground or encased in concrete with asphalt base paint.

C. Bolted Connectors: Provide bolted connectors for grounding to ground buses and equipment.

D. Grounding Bushings: Provide grounding bushings for conduits where conduits are not effectively grounded by firm contact to the grounded enclosure.

2.4 GROUNDING RODS

A. Length and Size: Provide grounding rods 3/4-inch in diameter and 20 feet long.

B. Grounding Rod Material: Stainless steel.

PART 3 EXECUTION

3.1 INSTALLATION

A. General:

1. Install conductors to preclude exposure to physical damage.

2. Install connections firm and tight.

3. Arrange conductors and connectors without placing strain on the connections.

4. Bury equipment grounding conductors as shown, or at a minimum of 12 inches below grade.

5. Bring loops or taps up for connection to equipment or other items to be grounded.

6. Install an insulated grounding conductor in all conduits.

7. When raceways are used to contain and protect grounding conductors, install in accordance with NEC.

8. Where conductors are installed in nonmetallic raceway, provide the grounding conductor in addition to the neutral wire, sized in accordance with NEC or as scheduled.

9. Perform exothermic welding with properly sized molds.

B. Grounding Rod Installation:

1. Install grounding rods as shown with the top of the rod a minimum of 6 inches below grade.

2. Drive grounding rods into permanently moist soil.

3. Provide additional ground rod sections as required to reach permanently moist soil.

4. Provide ground rod test well without bottom for access to grounding rod and conductor where shown.

C. Equipment Grounding: Ground each piece of electrical equipment using a conductor in the raceway feeding the equipment in accordance with NEC.

1. Unless specified otherwise, connect transformer enclosures and neutrals to the grounding system. Connect the neutral ground connection at the transformer terminal. Make the connection from the ground grid to the ground bus and enclosures of motor control center, lighting and distribution panelboard, and control, relay and instrumentation panels.

2. Provide two separate, independent, diagonally opposite connections for power transformers so removal of one connection will not impair continuity of the ground system.

D. Grounding Conductors: Connect the grounding conductor between the equipment and the grounding system. Where a ground bar is furnished with the panelboard, connect the grounding conductor to the bar.

E. Miscellaneous Grounding: Provide grounding for the following:

1. Ground receptacles and switches and their metal plates through positive ground connection to the yoke/strap, outlet box and grounding system grounding wire installed in the conduit.

2. Ground racks, supports, frames, covers and metal parts in manholes or handholes, controllers, motor frames, surge capacitors, arrestors, lighting fixtures, metal structures, exposed noncurrent carrying metal, mechanical equipment, hoist beams, cranes and similar items.

3.2 FIELD QUALITY CONTROL

A. Tests: Conduct a witnessed test to determine the ground impedance for the entire system using a ground loop impedance tester. Provide a maximum impedance of 5 ohms at any point of the test. Add additional grounding rods if necessary to meet this requirement.

END OF SECTION

SECTION 16075
ELECTRICAL IDENTIFICATION

PART 1 GENERAL

1.1 SUMMARY

A. Section Includes: Requirements for providing materials for the identification of electrical equipment, components, conduits, cables and wiring, and furnishing and installing safety signs.

B. Related Work Specified in Other Sections Includes:

1. Section 16050 - Basic Electrical Materials and Methods

1.2 REFERENCES

A. Codes and standards referred to in this Section are:

1.	ANSI C2	-	National Electrical Safety Code (NESC)
2.	ANSI Z535.1	-	Safety Color Code
3.	ANSI Z535.2	-	Environmental and Facility Safety Signs
4.	ANSI Z535.3	-	Criteria for Safety Symbols
5.	OSHA	-	Occupational Safety and Health Act

1.3 SUBMITTALS

A. General: Furnish all submittals, including the following, as specified in the Specific/General Provisions.

B. Product Data and Information: Furnish manufacturer's catalog data for safety signs, nameplates, labels and markers.

1. Furnish manufacturer's instructions indicating application conditions and limitations of use; and storage, handling, protection, examination and installation of product.

C. CONTRACTOR's Record Drawings: Furnish CONTRACTOR's record drawings accurately showing actual location of markers for underground ducts, handholes and manholes, at completion of the Project.

1.4 DELIVERY, STORAGE AND HANDLING

A. General: Deliver, store and handle all products and materials as specified in the Specific/General Provisions.

1.5 SPARE PARTS

A. General: Furnish the following spare parts.

1. Ten safety signs of each size and wording.

B. Packaging: Package spare parts in containers bearing labels clearly designating contents. Identify all spare parts with information needed for reordering. Deliver spare parts in original factory packages.

PART 2 PRODUCTS

2.1 MANUFACTURERS

A. Acceptable Manufacturers: Acceptable manufacturers are listed below. Other manufacturers of equivalent products may be submitted for review.

1. W. H. Brady Company
2. Seton
3. Thomas & Betts

2.2 MATERIALS AND COMPONENTS

A. General: Provide identification materials listed and classified by UL or tested by an acceptable Electrical Testing Company certifying the equivalence of the materials to UL listing requirements and OSHA approved.

B. Laminated Plastic Nameplates: Provide engraved three layer laminated plastic nameplates with black letters on white background and fastened with corrosion-resistant screws. Do not use mounting cement for fastening nameplates.

1. Provide nameplates with 1-inch high lettering for motor control center, Methanol Pump Control Panels, automatic transfer switch, mini power-zone, panelboard, and similarly grouped equipment, transformers and disconnect switches.

2. Provide nameplates with 1/2-inch high lettering for individual components of a group such as main breakers, motor control center units and similar devices.

3. Provide nameplates for each motor identifying service or function and lettering of an appropriate size to suit each motor.

5. Provide approved laminated directories of circuits with typewritten designations of each branch circuit in each panelboard.

6. Provide smaller lettering for a neat, legible nameplate where the amount of lettering causes excessively large nameplates.

C. Wire Markers: Identify wire bundles and each individual wire.

1. Wire bundles: Provide a brass or rigid fiber identifying tag attached with nylon self locking "Ty-Raps".

2. Wire identification markers: Provide a printed white, heat-shrink, seamless tubing type with black bold lettering for wires size No. 10 AWG and smaller. Provide a printed self-laminating white, vinyl type with black bold lettering for wires No. 8 AWG and larger.

D. Safety Signs: Provide safety signs in accordance with OSHA standard meeting the requirements of ANSI C2, ANSI Z535.1, ANSI Z535.2 and ANSI Z535.3.

1. Provide safety signs manufactured from vinyl having a minimum thickness of 60 mils with red and black letters and graphics on a white background.

2. Size: 10 inches by 14 inches except signs 7-inch by 10-inch may be provided where the larger size cannot be applied.

3. Mount safety signs using corrosion-resistant screws. Do not use mounting cement.

PART 3 EXECUTION

3.1 PREPARATION

A. Surface Preparation: Degrease and clean surfaces to receive nameplates, labels and marking paint.

3.2 INSTALLATION

A. General: Install nameplates on the front of equipment, parallel to the equipment lines and secured with corrosion resistant screws.

1. Install laminated nameplates identifying:
   a. Each electrical equipment enclosure
   b. Individual equipment and devices

B. Wire Markers: Identify wire bundles and each individual wire with identification tags as follows:

1. Wire Bundles: Install an identifying tag engraved with the conduit number where conduits enter motor control centers, switchgear, switchboards, control panels, terminal boxes and the like.

2. Wire identification markers: Provide wire identification markers on each wire at all termination points.

   a. On power and lighting circuits: The branch circuit or feeder number as indicated on drawings

   b. On control circuits terminated in motor control center, control panels and alike: The field device and terminal number of the opposite end connection.

   c. On control circuits at each field device: The panel or compartment number and terminal number of the opposite end connection.

3. Oversize wire markers so that after heat shrinking the wire marker can be rotated on the wire. Rotate wire markers so that wire identification number is visible.

END OF SECTION

SECTION 16080

ELECTRICAL TESTING REQUIREMENTS

PART 1 GENERAL

1.1 SUMMARY

A. Section Includes: Requirements of field acceptance testing of materials and equipment provided under various other sections to determine suitability for installation and energization. Requirements of field testing and certification of electrical equipment and materials provided under various other sections to assess their equivalence to UL Inc. listing/labeling.

B. Related Work Specified in Other Sections Includes, But is Not Limited to, the Following:

1. All relevant electrical sections.

1.2 REFERENCES

A. Codes and standards referred to in this Section are:

1. NETA - International Electrical Testing Association
2. NIST - National Institute of Standards and Technology

1.3 SUBMITTALS

A. General: Furnish all submittals including the following, as specified in Section 16050.

1. Acceptance Testing Reports: Furnish acceptance testing reports for all equipment and materials including the following information:

a. Summary of the test

b. Description of material or equipment tested

c. Description of test including acceptable test values

d. Test results

e. Analysis of test results with recommendations

2. UL Testing: Furnish standard test parameters in accordance with the acceptable codes and standards for all the equipment and materials tested for equivalence to UL listing.
3. UL Test Reports and Certificates: Furnish test reports and certificates for all equipment and materials tested for equivalence to UL listing, for approval.

PART 2 PRODUCTS

2.1 TESTING COMPANIES

A. Acceptable Testing Companies: Acceptable testing companies are as listed below:

1. MET Electrical Testing Co., Inc.
2. ASET Power Systems Services, Inc.
3. Electric Power Systems, Inc.
4. Electro-Test, Inc.
5. High Voltage Maintenance Corp.
6. UL Underwriters Laboratories, Inc.
7. Other OSHA and NETA approved testing facilities

2.2 SOURCE QUALITY CONTROL

A. Tests: Furnish all testing and certification in accordance with the latest NETA, ANSI, IEEE and NEMA Standards to meet the UL requirements, NFPA Standards and NEC.

B. Test Equipment: Furnish all testing equipment, cables and appurtenances required to perform all tests and certifications in accordance with the following:

1. Use instruments that have been calibrated, to assure that they are within rated accuracy in accordance with NIST.
2. Select test instruments that are appropriate for the variable being measured.

PART 3 EXECUTION

3.1 UL TESTING AND CERTIFICATION

A. General: Furnish the test reports and certifications for UL equivalence prior to acceptance of all materials and equipment requiring such tests and certifications.

3.2 ACCEPTANCE TESTING

A. General: Furnish acceptance test reports prior to acceptance of all materials, equipment and installations requiring such tests.

END OF SECTION

SECTION 16110

CONDUIT, WIRE AND GROUNDING

PART 1 - GENERAL

1.01 SCOPE

A. Conduit, wire, and grounding includes furnishing and installing all conduits, underground ducts, wires, cables, and grounding systems as shown, specified, and required for a complete installation. The work includes the furnishing and installation of wires and cables in flexible and rigid conduits, underground ducts, all as required, shown, and specified.

B. Descriptive literature and technical information relative to conduits, wires, and grounding shall be submitted by the Contractor in conformance with the requirements of the General Provisions.

C. The Contractor shall, with reference to approved drawings of equipment being installed, prepare detailed plans showing the layout and size of all conduits, ducts, bus ducts, cables and wires, connections between the point of service connection and all utilizing equipment. These plans shall be in sufficient detail to serve as working drawings for the installing electricians. The drawings shall be to scale not less than the Plans and be prepared as the work develops with approval by the Engineer before major steps of work are undertaken.

D. During construction, careful notes shall be kept of all deviations or changes in the layout or connection diagrams. Upon completion of the work, all working drawings shall be corrected and then marked “Record Drawings”.

E. Excavation, backfill, form work, concrete, and reinforcing shall be in accordance with the applicable Workmanship and Materials sections.

1.02 WIRES AND CABLES - GENERAL

A. Wires and cables required for all systems shall be complete, connecting all equipment and control components. Conductors shall be of ample size, with suitable insulation as specified hereinafter.

PART 2 – PRODUCTS

2.01 600-VOLT WIRE AND CABLE - CONDUCTORS

A. All ground conductors and power, control, and lighting conductors shall be soft-drawn or annealed stranded copper wire meeting the requirements of ASTM B 3

or B 33. For lighting fixture and convenience outlet wiring only, conductors No. 10 AWG and smaller may be solid conductor. Conductors shall be sized to limit the maximum conductor temperature to less than 75°C, except where specifically stated otherwise. Table 310.15(B)(16) of the NEC shall be the guide in determining 600-volt conductor sizes. The minimum size of conductor for power and lighting wiring shall be No. 12 AWG.

2.02 600-VOLT POWER AND CONTROL CABLE -INSULATION

A. Low voltage circuits shall be wired with 600-volt insulated conductors, sized as shown, or as required by the actual load to be served, whichever is larger.

B. Single Conductor : Insulation for single 600-volt copper conductors to be used on 480V feeders shall be cross-linked polyethylene compound, U.L. Inc. listed, NEC Type XHHW-2, with surface print cable identification; as manufactured by Okonite, American, Southwire or equal.

C. Multiconductor Cables : Individual conductors shall be insulated with 15 mils of polyethylene or PVC and 4-mil nylon jacket. The bundle of conductors shall be wrapped with tape binder and an outer jacket of not less than 45 mils of PVC. Use ICEA Method 1 for color coding wires.

D. Insulation for 600-volt copper conductors to be used for lighting and receptacle circuits shall be Polyvinyl Chloride (PVC) insulated, U.L. Inc. listed, NEC Type THWN-2, and shall be Okonite X-Olene, American, or equal.

2.03 INSTRUMENTATION/DATA CABLES - INSULATION

A. 4-20mA Analog: Shielded two-conductor No. 16 AWG cables for instrumentation shall be properly stranded 600-volt insulated copper wire twisted cables as shown. Conductor insulation shall be polyethylene. Shields shall be overlapped metalized tape providing 100 percent coverage with tinned copper drain wire. Cable outer jacketing shall be of polyvinyl chloride. Cables shall be as manufactured by Belden #8719, or equal.

B. Three Conductor: Stranded No. 16 wire, 600 volt polyethylene insulation, twisted conductors, tinned copper drain wire, overlapped metalized tape overall shield providing 100 percent shield coverage and outer jacket of PVC. Beldon Cat. No. 8618.

C. Category 5: Provide cable having third party verification to TIA/EIA 568-A Category 5 requirements and constructed of 4 pair stranded No. 24 AWG solid copper wire, polyethylene or polypropylene insulation, stranded No. 24 AWG tinned copper drain wire, overlapped metalized tape overall shield providing 100 percent shield coverage and outer jacket of gray PVC. Belden Cat. No. 1624R.

D. Twinaxial (Data Highway): Provide stranded No. 20 AWG tinned copper wire (9.5 ohms/mile), 78 ohm nominal impedance, 300 volt polyethylene insulation, tinned copper drain wire, overlapped metalized tape overall shield providing 100

percent shield coverage and 55 percent tinned copper braid shield (4.1 ohms/mile) and outer jacket of blue PVC. Belden Cat. No. 9463.

E. 1-1/2 Pair (RS-485): Provide three stranded No. 22 AWG tinned copper wires with 300 volt FHDPE insulation, a tinned copper drain wire, overlapped metalized tape overall shield providing 100 percent shield coverage, 90 percent tinned copper braid shield and a PVC outer jacket. Insulated wires shall be configured as one twisted pair and one reference conductor – 120 Ohms characteristic impedance. Belden Cat. No. 3106A.

2.04 UNDERGROUND DUCTS:

A. Underground ducts for feeders, instrumentation wiring, control wiring, and communication wiring shall be plastic conduit and shall be encased in reinforced concrete as shown. In general, the plastic conduit shall be PVC Schedule 80, NEMA TC-2, as manufactured by Carlon, Triangle, Allied Tube, or equal. Ducts shall be installed as shown and shall be sloped uniformly between the elevations shown. Manufactured fitted plastic duct spacers shall be used for installation spacing.

B. Concrete for the encasement shall be Class B using aggregate not exceeding 3/4 inch and shall be reinforced as shown. Ducts shall drain to the manholes or end structures. End bell fittings shall be provided on the ducts in the manholes.

C. Appropriate expansion fittings or other approved methods shall be used in the installation of plastic ducts so as to avoid expansion and distortion prior to encasement in concrete. Spacers shall be located a maximum of 8 feet, 0 inches on-centers and the duct spacings center-to-center shall not vary in excess of 1/16 inch from the specified spacings shown, prior to and after encasement.

D. Each duct shall be carefully cleaned before and after installation. All inside surfaces shall be free from imperfections likely to injure the cable. After installation of complete duct runs in sizes 2 inches and larger, ducts shall be snaked with an approved tube cleaner equipped with an approved cylindrical mandrel of a diameter not less than 85 percent of the nominal diameter of the duct. Ducts through which the mandrel will not pass shall not be incorporated in the work. After snaking, the ends of dead-ended ducts shall be protected with standard conduit caps to prevent the entrance of water or other foreign matter.

E. Where ducts enter buildings or at stub-ups to equipment, transitions to aluminum conduits shall be made as noted and detailed. Where it is not otherwise shown, all ducts entering buildings and structures, exclusive of manholes, shall have transitions to aluminum conduit at least 5 feet from the outermost edge of the pile cap or footing supporting the outermost vertical wall of the building or structure.

F. Transition from above-grade rigid aluminum conduit to nonmetallic conduit shall be accomplished with a threaded adapter. Rigid aluminum conduit installed above grade and extending below grade shall include the first 90° elbow. All

rigid aluminum conduit extending below grade shall be coated with two coats of an asphaltum-type paint along its entire length below grade and extending 6" above grade or above the top of the finished slab. The asphaltum-type paint shall conform to Fed. Spec. TT-V-51 and equivalent to Koppers Bitumastic Super Service Black.

2.05 LIQUIDTIGHT FLEXIBLE NONMETALLIC CONDUIT (Size 2 Inch or Less)

A. All flexible conduits size 2 inch or less in non-classified areas shall be nonmetallic, liquidtight, and have a circular cross section. The conduit shall be resistant to oil, water, heat, sunlight, corrosion, most acids, ozone, alkali, strains, abrasions, and crushing. The conduit shall be rated for continuous use at 140°F and be U.L. Inc. listed. Compatible liquidtight nonmetallic fittings shall be used for conduit installation. The flexible conduit and fittings shall be as manufactured by Carlon, Kellems, K-Flex, or equal.

2.06 LIQUIDTIGHT FLEXIBLE NONMETALLIC CONDUIT (Greater than 2 Inch)

A. All flexible conduits greater than 2 inch in non-classified areas shall be nonmetallic, liquidtight, and have a circular cross section. The conduit shall be of a light-weight aluminum core, coupled with a PVC jacket. The conduit shall resistant to sunlight, acid, and oil. The conduit shall be rated for a working temperature between -20°C to 80°C and be U.L. Inc. listed. Compatible liquidtight metallic fittings shall be used for conduit installation. The flexible conduit and fittings shall be as manufactured by Thomas & Betts or equal.

2.07 METALLIC CONDUIT AND BOXES

A. All conduit shall comply with the requirements of the U.L. Inc. Standards. Conduit shall be delivered to the job site in standard bundles having each length suitably marked with the manufacturer's name or trademark and bearing the label of the U.L. Inc. inspection service. The minimum size conduit shall be 3/4 inch.

B. All conduit shall be rigid heavy wall, Alloy 6063T-42 aluminum conduit. Aluminum conduit shall conform to Federal Specification WW-C-540 and ANSI C80.5. Aluminum conduit installed exterior to the Primary Sludge Pumping Station (aboveground) shall be provided with 40 mil PVC coating.

C. Cast aluminum shall be used for outlet boxes and fittings in aluminum conduit systems. Outlet and junction boxes shall be of proper dimensions for each application. Cast metal boxes shall have watertight gaskets and covers secured with nonferrous screws.

D. PVC coated boxes and fittings shall be used in PVC coated conduit systems.

E. Conduit fittings, such as elbows, tees, couplings, caps, bushings, nipples, and locknuts shall be threaded to provide watertight connections.

F. Where it is necessary to use electrical unions, Universal, Erikson, or equal conduit couplings shall be used.

2.08 EXPANSION FITTINGS

A. Expansion fittings shall be installed at all expansion joints and where required by codes. Conduit expansion fittings shall be Crouse-Hinds Type XD, O.Z./Gedney Type DX, or equal.

2.09 TERMINAL, JUNCTION AND PULL BOXES

A. Junction and pull boxes shall be installed as shown and as required.

B. Surface-mounted junction and pull boxes, unless specified otherwise herein, shall be of cast aluminum complete with mounting lugs, threaded entry bosses and flange or rabbeted gasketed covers.

C. Surface-mounted junction and pull boxes which would exceed 50 pounds weight if cast or which are shown as fabricated sheet metal boxes shall be made of 1/8-inch sheet aluminum with sides return channel flanged around the cover opening or with approved welded angle or channel supporting frames. Sheet aluminum boxes shall be provided with mounting lugs or channels and with conduit termination hubs. All seams in sheet aluminum boxes shall be continuously welded and ground smooth. All surface boxes larger than 6 inches square shall be mounted a minimum of 3/4 inch clear of the mounting surface by means of offset lugs or support channels.

D. Fabricated junction and pull boxes which are partially or fully encased in concrete shall be made of 10-gauge sheet stainless steel and fabricated in a similar manner to the sheet aluminum pull boxes specified herein, complete with mounting lugs or channels and conduit termination hubs. Cast steel boxes shall be provided in smaller sizes where required for full or partial encasement in concrete.

E. All junction and pull boxes shall be provided with covers or doors as shown or required. Covers and doors shall be fabricated of materials equal in weight, gauge, structure, and metallic composition as the basic box. All covers shall be gasketed and held in place with nonferrous captive knurled head screw slot bolts. All pull and junction boxes shall be provided with hinged doors.

F. Enclosures with doors shall have continuous hinges, and 3-point catches with nylon rollers at the top and bottom and external handles and hasps for padlocks. All doors shall utilize an overlapping design and shall be gasketed.

G. All boxes shall be provided with partitions as shown and as required.

H. Fabricated boxes shall be NEMA 12 enclosures for indoor, above grade areas; rated NEMA 4X enclosures for outdoor or corrosive areas. Fabricated boxes shall be as manufactured by Hennessy Products, Inc., Hoffman, Hope or equal.

PART 3 – EXECUTION

3.01 CONDUIT INSTALLATION

A. All conduits shall be installed as required. The conduit system shall be installed complete with all accessories, fittings, and boxes, in an approved and workmanlike manner to provide proper raceways for electrical conductors.

B. The Contractor shall note that conduit runs shown are for the purpose of outlining the general method of routing the conduits to avoid interferences.

C. All conduit shall be run exposed, except where shown otherwise.

D. Sizes not shown shall be one size larger than indicated in Tables 1 or 4, Chapter 9, of the NEC. Exposed conduit shall be run parallel to or at right angles from walls or beams and plumb on columns and on walls. Conduit shall not be run through beams except where approved by the Engineer or specifically detailed. Where possible, conduit shall be pitched slightly to drain to the outlet boxes or otherwise installed to avoid trapping of condensate. Where necessary to ensure drainage, Appleton Type ECD, Crouse-Hinds or equal, 1/4-inch drain fitting shall be installed in the trapped conduit at low points.

E. Factory made bends or elbows shall be used wherever possible. Field bends shall be carefully made to prevent conduit damage or reduction in the internal area. The bending radius shall be not less than six times the nominal diameters of the conduit with carefully matched bends on parallel runs to present a neat appearance. The number of crossovers shall be kept to a minimum.

F. All conduit shall be reamed to remove burrs before installation. Aluminum conduit shall be cut with a saw to prevent reduction in internal area. Threads on aluminum conduit shall be given a coat of graphite or other approved compound. All connections and joints in all conduit runs shall be watertight and ensure a low resistance ground path in the conduit system. All conduit runs shall be swabbed to remove foreign matter before wires
are pulled in. Conduit terminations in boxes, panels, switchboards, motor control centers, and other sheet metal enclosures shall be bonded together for grounding and be fitted with insulating bushings, O.Z./Gedney Type A, Thomas and Betts, or equal. Where grounding bushings are required by code or shown, O.Z./Gedney Type SBLG, Thomas and Betts, or equal shall be furnished.

G. Conduit shall be neatly grouped where several lines follow a parallel course, and shall be well supported, using stainless steel clips or hangers of the ring or trapeze type. Clips, hangers, and support rods shall be held by self-drilling

anchors, power-driven fasteners, or stainless steel channel insets in the concrete ceilings or walls. Perforated strap hangers will not be accepted.

H. Conduit runs that enter the building from outdoors, or that pass through refrigerated or air-conditioned areas, are subject to moisture accumulation due to condensation. A pull box shall be provided in the conduit run near the point of temperature change to prevent trapping of moisture within the conduit system. A 1/4-inch weep hole shall be drilled in the bottom of the pull box. After the wires and cables are installed, the end of the conduit continuing into the warmer area shall be packed with a nonsetting sealing compound.

3.02 CONDUIT CONNECTIONS TO EQUIPMENT

A. The conduit system shall terminate at the terminal box or at the conduit connection point of electric motors, devices, and equipment. Terminations of conduits at such locations shall permit direct wire connections to the motors, devices, or equipment.

B. Conduit connections shall be made with rigid conduit if the equipment is fixed and not subject to adjustment, mechanical movement, or vibration, Myers water-tight/dust-tight hubs shall be used for outdoor, below grade or wash down areas. Rigid conduit connections shall have union fittings to permit removal of equipment without cutting or breaking the conduit.

C. Conduit connections shall be made with approved flexible nonmetallic conduit if the equipment is subject to adjustment, mechanical movement, or vibration. Flexible conduit connections shall be watertight.

3.03 HAZARDOUS AREAS

A. All conduit and equipment installed in or run through hazardous areas, as well as other electrical appurtenances installed therein, shall be installed to conform in every respect to Chapter 5 of the NEC for Class I, Division 2, Group D hazardous locations. All material installed in hazardous areas shall be listed as complying with the requirements of Underwriters Laboratories for use in Class I, Group D atmospheres.

B. Sealing shall be provided for all conduits within and leaving hazardous areas as required.

3.04 600-VOLT WIRE AND CABLE - INSTALLATION

A. The 600-volt wires and cables pulled into ducts and conduit shall be installed without the use of lubricants, except where such use is necessary and approved by the cable manufacturers and the Engineer. Wires and cables shall be carefully handled to avoid twists and kinks in the conductors or damage to the insulation. All trapped conduit and duct
lines shall be swabbed to remove any accumulated moisture or debris before wires or cables are pulled in.

B. Cable reels shall be stored on concrete or other hard surface, or shall be lagged with 2 x 4 wood laggings providing 100 percent coverage.

C. No splicing will be permitted, except in junction boxes.

D. Lug bolting at terminals, devices, or bus bars shall be made up with a flat washer, a Belleville washer, and a locknut.

E. Lines of nylon or polypropylene, propelled by carbon dioxide or compressed air, shall be used to snake or pull wire and cable into conduits. Flat steel tapes or steel cables shall not be used.

3.05 600-VOLT WIRE AND CABLE – SPLICES AND TERMINATIONS

A. Splices between copper conductors, Size No. 10 AWG and smaller, shall be made up with compression type butt connections. Splices between copper conductors, Size No. 8 AWG and larger, shall be made up with U.L. Inc. listed compression type tube connectors. Lug bolting at devices or bus bars shall be made up with a flat washer, a Belleville washer, and a locknut.

B. Splices and pigtail connections for lighting and receptacle wiring inside the buildings, No. 10 AWG and smaller, shall be made with a pre-insulated spring connectors, or equal.

C. Splices and lug terminations in 600-volt insulated cables shall be carefully taped and covered, using materials recommended by the cable manufacturer, to provide watertight insulation equal to that of the conductors.

D. Splices shall not be made within manholes unless specifically approved by the Engineer.

3.06 600-VOLT WIRE AND CABLE - TESTS

A. The 600-volt insulated cables shall be factory tested prior to shipment in accordance with IPCEA standards for the insulation specified.

B. The following 600-volt wires and cable shall be tested after installation but before final connections are made up:

1. All feeders from motor control centers to motors 30 horsepower and larger.
2. All feeders from variable speed drive units.
3. All feeders from motor control centers to lighting panels and dry-type transformers.

C. For the above listed cables, a test voltage of 1,500 volts ac shall be applied for a period of 1 minute between all conductors in the same conduit, and between each conductor and ground.

D. All tests shall be made at the Contractor's expense, and certification of the tests shall be submitted to the Engineer. If any failures occur during the tests, the Contractor shall replace the cable.

3.07 IDENTIFICATION OF CIRCUITS

A. All wires and cables shall be banded with an identifying number and color code at each end termination and at each splice point in junction boxes. The identifying number of each wire shall be determined at the point of circuit origin, and shall continue unchanged to the point of circuit termination. In each conduit system, the wire identifying numbers shall include the conduit designation with a numeral suffix. The numeral suffix shall start with No. 1 and continue as required.

B. Where conduits enter motor control centers, switchgear terminal cabinets, and the like, the identification tag shall be fastened to the wire bundle near the conduit termination. The tag shall be held by an adjustable, self-locking nylon "Ty-Rap" as manufactured by Thomas and Betts Co., or equal. The identifying tag shall be of aluminum, brass, rigid fiber, and shall be engraved, stamped, or painted with the scheduled conduit number.

C. The wire identifying numbers and color code shall be applied as PVC slip-on sleeves, properly fitted to the wire diameter. The sleeves shall be as manufactured by Brady Co., Thomas and Betts Co., or equal. Wires shall be color coded in conformance with the requirements of applicable codes.

3.08 WIRE AND CABLE CONNECTIONS TO EQUIPMENT

A. Electrical connections shall be made to all equipment in strict accordance with the manufacturer's approved wiring diagrams, the Plans, or as approved by the Engineer. The Contractor shall be responsible for the accuracy of his work, and shall repair any damage and replace any damaged equipment resulting from erroneous connections.

3.09 COATING

A. Where aluminum surfaces such as boxes, conduit, or structural supports come in contact with incompatible metals, lime, mortar, concrete, or other masonry materials, the contact areas shall be given one field coat of Koppers Metal Passivator No. 40 and one coat of Koppers Bitumastic Super Service Black or two coats of asphalt varnish conforming to Fed. Spec. TT-V-51.

END OF SECTION

SECTION 16140

WIRING DEVICES

PART 1 GENERAL

1.1 SUMMARY

A. Section Includes: Requirements for providing, wiring devices and appurtenances as indicated, in accordance with the Contract Documents.

B. Related Work Specified in Other Sections Includes:

1. Section 16050 - Basic Electrical Materials and Methods
2. Section 16110 – Conduit, Wiring and Grounding
3. Section 16060 - Grounding

1.2 REFERENCES

A. Codes and standards referred to in this Section are:

1. Fed Spec WC 596 - Electrical Power Connector, Plug, Receptacle and Cable Outlet
2. Fed Spec WS 896 - Toggle and Lock, Flush Mounted Switches
3. CSA C22.2-182.1 - Industrial-type, Special-Use Attachment Plugs, Receptacles and Connectors
4. UL 20 - General - Use Snap Switches
5. UL 498 - Attachment Plugs and Receptacles
6. UL 508 - Industrial Control Equipment
7. UL 894 - Switches for Use in Hazardous (Classified) Locations
8. UL 1010 - Receptacle-Plug Combinations for Use in Hazardous (Classified) Locations
9. UL 1682 - Plugs, Receptacles, and Cable Connectors of the Pin and Sleeve Type
10. UL 1686 - Standard for Pin and Sleeve Configurations

1.3 SUBMITTALS

A. General: Furnish all submittals, including the following, as specified in Section 16050.

1.4 DELIVERY, STORAGE AND HANDLING

A. General: Deliver, store and handle all products and materials as specified the Specific/General Provisions.

1.5 SPARE PARTS

A. General: Furnish the following spare parts.

1. Two 20-ampere, 125-volt, 2-pole, 3-wire, grounding type plugs, NEMA 5-20P, nylon housing, Hubbell Cat. No. HBL5366C

B. Packaging: Package spare parts in containers bearing labels clearly designating contents. Identify all spare parts with information needed for reordering. Deliver spare parts in original factory packages.

PART 2 PRODUCTS

2.1 MANUFACTURERS

A. Standard of Quality and General Configuration: Use of manufacturer's name and model or catalog number is for the purpose of establishing the desired.

B. Configuration And Rating: Provide NEMA specification grade wiring devices in the type, color, configuration and electrical rating for the service indicated.

C. Symbols: See the electrical symbol list shown for identification of all device types.

D. Acceptable Manufacturers: Acceptable manufacturers are listed below. Other manufacturers of equivalent products may be submitted for review.

1. Hubbell Inc. Wiring Device/Kellems Division
2. Pass and Seymour
3. Cooper Wiring Devices
4. Leviton
5. Appleton Electric Company
6. Crouse-Hinds Company
7. Tork
8. Thomas & Betts

2.2 LIGHTING TOGGLE SWITCHES

A. General: Provide toggle switches of specification grade rated 20- amperes, 120-277 volts ac conforming to Fed. Spec. WS 896 and UL Standard 20. Manufacture switches with back and side wired binding screw type terminals, one piece spring contact arm and terminal plate with silver alloy contacts, one piece steel mounting strap with an assured grounding clip, thermoset body color coded for identification by amperage and a brown toggle. Provide ivory toggles in finished areas.

B. Types:

DESCRIPTION	HUBBELL CAT. NO.
Single pole	HBL1221

2.4 CONVENIENCE RECEPTACLES

A. General: Provide specification grade convenience receptacles conforming to Fed.

Spec. WC 596 UL listed, with nylon impact resistant face, one piece metal wrap around mounting strap with assured grounding clip, back and side wired binding screw type terminals, brass power contacts and a heavy duty heat stabilized thermoset plastic base. Provide brown devices in unfinished areas and ivory devices in finished areas unless otherwise specified.

B. TYPES:

DESCRIPTION	RATING	COLOR	HUBBELL CAT. NO.
Duplex	NEMA 5-20R 20A, 125V, 2P, 3W	Brown/ Ivory	HBL5362/ HBL5362I

2.5 PLATES AND COVERS

A. General: Provide covers and plates for the various areas as follows:

1. Interior Areas:

a. Provide receptacles and switches with brushed aluminum cover plates.

1. Exterior Areas:

a. For switches provide weatherproof, gasketed, covers with external operating handle.

b. For receptacles provide a weatherproof, gasketed, clear, flameretardant, jumbo, polycarbonate cover a minimum of 5.4-inches deep, suitable for use with a 10-3 cord that allows the cover to be closed even when the receptacle is in use.

PART 3 EXECUTION

3.1 INSTALLATION

A. General: Install all wiring devices in accordance with manufacturer's recommendations and approved shop drawings.

B. Toggle Switches: Install toggle switches applicable for the area environment for switching lighting or other branch circuit loads.

C. Receptacles: Install receptacles applicable for the area environment.

D. Grounding: Ground all devices in accordance with the requirements specified in Section 16060.

END OF SECTION

SECTION 16421
LIGHTING CONTROL CABINET

PART 1 GENERAL

1.1 SUMMARY

A. Section Includes: Requirements for providing, installing and testing enclosed contactors for controlling feeders and branch circuits for lighting, heating and general purpose loads.

B. Related Work Specified in Other Sections Includes, But is Not Limited to, the Following:

1. Section 16050 - Basic Electrical Materials and Methods
2. Section 16075 - Electrical Identification
3. Section 16060 - Grounding
4. Section 16110 – Conduit, Wiring and Grounding
5. Section 16500 - Lighting

1.2 REFERENCES

A. Codes and standards referred to in this Section are:

1. NEC - National Electrical Code
2. NEMA ICS 2 - Industrial Control and Systems Controllers, Contactors and Overload Relays Not More than 2000 Volts AC or 750 Volts DC.
3. UL 486A - Wire Connectors and Soldering Lugs For Use With Copper Conductors

1.3 SUBMITTALS

A. General: Furnish all submittals, including the following, as specified in the General Provisions and Section 16050.

B. Product Data and Information: Furnish manufacturer's data indicating contactor dimensions size, voltage ratings, current ratings and withstand ratings.

C. Shop Drawings: Furnish shop drawings for the contactors.

D. Operations and Maintenance Manuals: Furnish six copies of the manufacturer's operations and maintenance manuals. Furnish instructions for replacing and maintaining contacts and coils.

1.4 QUALITY ASSURANCE

A. Codes: Provide contactors meeting the requirements of NFPA and the National Electrical Code.

B. Regulatory Requirements: Provide all contactors designed, manufactured and tested in accordance with latest ANSI, IEEE and NEMA Standards, and UL listed

1.5 SPARE PARTS

A. General: Furnish the following spare parts:

1. One set of contacts for each type of contactor furnished
2. One coil for each type of contactor furnished

B. Packaging: Package and identify the spare parts properly for use and reordering. Provide spare parts in original factory cartons.

1.6 DELIVERY, STORAGE AND HANDLING

A. General: Deliver, store and handle all products and materials as specified in the Specific Provisions.

PART 2 PRODUCTS

2.1 MANUFACTURERS

A. Acceptable Manufacturers: Acceptable manufacturers are listed below. Other manufacturers of equivalent products may be submitted for review.

1. Square D Company
2. Cutler Hammer
3. Approved equal

2.2 MATERIALS

A. General Purpose Contactors: Provide general purpose contactors in accordance with NEMA ICS 2 meeting the following:

1. Coil Voltage: 120-volts, 60-hertz as shown

2. Poles: Provide four-pole contactor, unless otherwise indicated.

3. Size: NEMA rated contactors Size 1 or larger designed to handle the connected load.

B. Lighting Contactors: Provide lighting contactors meeting the following:

1. Configuration: Electrically operated, electrically held for 3 wire control as shown

2. Coil Voltage: 120-volts, 60-hertz as shown

3. Poles: Provide four-pole contactor, unless otherwise indicated.

4. Contact Rating: 20 amperes for tungsten or ballast loads and 30 amperes for all other loads at 600 volts.

C. Contactor Housings: Provide contactor housed in NEMA 1 rated enclosure.

2.3 ACCESSORIES

A. Hand-Off-Auto (HOA) Selector Switch

B. 1000 Watt Photocell for lighting control.

C. Single-pole, 120V, 15 ampere circuit breaker for control power disconnecting means.

PART 3 EXECUTION

3.1 INSTALLATION

A. General: Install all contactors in accordance with the manufacturer's recommendations and approved shop drawings and recognized industry practices. Comply with requirements of NEMA, NEC, and local electrical codes.

B. Coordination: Coordinate contactor installation with other work including cabling and wiring work.

C. Torque Requirements: Tighten electrical connectors and terminals including screws and bolts, in accordance with equipment manufacturers' published torque tightening recommendations. Where manufacturer’s torquing requirement are not available, tighten connectors and terminals in accordance with UL 486 A.

3.2 CLEANING AND PAINTING

A. General: Clean and paint contactor enclosures as required.

END OF SECTION

SECTION 16433
PANELBOARDS

PART 1 GENERAL

1.1 SUMMARY

A. Section Includes: Requirements for providing lighting and distribution panelboards including circuit breakers and cabinets.

B. Related Work Specified in Other Sections Includes, But is Not Limited to, the Following:

1. Section 16050 - Basic Electrical Materials and Methods
2. Section 16075 - Electrical Identification
3. Section 16060 - Grounding

1.2 REFERENCES

A. Codes and standards referred to in this Section are:

1. NEMA PB 1 - Panelboards
2. UL 67 - Panelboards
3. Fed. Spec. W-P-115 - Power Distribution Panel
4. UL 486A - Wire Connectors and Soldering Lugs for Use with Copper
5. NEC - National Electrical Code

1.3 SUBMITTALS

A. General: Furnish all submittals, including the following, as specified in the Specific/General Provisions and Section 16050.

B. Product Data and Information: Furnish the manufacturer's catalog data for panelboards, circuit breakers and accessories.

C. Operations and Maintenance Manuals: Furnish operation and maintenance manuals for the panelboards as specified in the Specific/General Provisions.

1.4 QUALITY ASSURANCE

A. Codes: Provide all materials and workmanship meeting the requirements of the NFPA, the National Electrical Code and local codes.

1. Design, fabricate and test the panelboards in accordance with applicable ANSI, IEEE and NEMA standards.

2. Provide panelboards suitable for operation at their standard nameplate ratings in accordance with ANSI standards.

1.5 DELIVERY, STORAGE AND HANDLING

A. General: Deliver, store and handle all products and materials as specified in the Specific/General Provisions.

PART 2 PRODUCTS

2.1 MANUFACTURERS

A. Acceptable Manufacturers: Acceptable manufacturers are listed below. Other manufacturers of equivalent products may be submitted for review.

1. Panelboards

a. Cutler Hammer
b. General Electric Company
c. Square D Company

2.2 MATERIALS

A. General: Provide factory-assembled fully rated dead-front type, panelboards, suitable for surface or flush mounting with branch circuit breakers and a main circuit breaker or main lugs as indicated.

1. Provide panelboards with a full capacity separate ground bus and connected to a three-phase four-wire or a single-phase three-wire service with insulated neutral buses as indicated.

2. Provide panelboards with the voltage, frequency and current ratings as indicated conforming to NEMA Standard PB 1, Fed. Spec. W-P-115, UL 67 and the NEC.

3. Provide panelboards with copper main, neutral and ground buses.

B. Bracing: Provide main bus bracing exceeding the lowest interrupting rating of any circuit breaker installed.

C. Fabrication: Fabricate panelboards using galvanized steel, continuously welded. Provide cabinet fronts with doors over the circuit breakers. Provide doors fastened with concealed hinges and equipped with flush type catches.

1. Provide panelboards at least 20 inches wide, 5-3/4 inches deep, with wiring gutters on both sides.

2. Provide all panelboard trims exceeding five square feet in area with an inside permanently secured angle to support the trim during fastening.

2.3 COMPONENTS

A. Circuit Breakers: Provide bolt-on type branch and main circuit breakers.

1. Furnish the frame sizes, trip settings and number of poles as indicated. Mark ampere trip rating on the circuit breakers clear and visible.

   a. Provide 20-ampere, single-pole, 120 or 277 volt circuit breakers unless otherwise shown or scheduled.

2. Provide all breakers with quick-make, quick-break, toggle mechanisms with automatic thermal-magnetic, inverse time-limit overload and instantaneous short circuit protection on all poles, unless otherwise indicated. Indicate automatic tripping by the breaker handle assuming a clearly distinctive position from the manual ON and OFF position. Design the breaker handle to be trip-free on overloads.

3. Interrupting Rating: 10,000 rms symmetrical amperes for circuit breakers on 208 volt systems or less, and 42,000 rms symmetrical amperes for circuit breakers on 277 or 480 volt systems.

4. Provide multipole breakers that utilize a common tripping bar.

5. Provide ground fault interrupter circuit breakers for all circuits serving receptacles located below grade and outdoors and as scheduled.

6. Provide full module size single-pole breakers. Do not install two-pole breakers in a single-pole module.

2.4 ACCESSORIES

A. Directories: Provide directories in accordance with Section 16075.

B. Circuit Breaker Lockouts: Provide circuit breakers for Discharge Valves and Sludge Tank Motor Operated Valves with padlockable lockouts capable of locking the circuit breaker in the OFF position.

C. Keying: Key all panelboards alike.

PART 3 EXECUTION

3.1 INSTALLATION

A. General: Install all panelboards in accordance with manufacturer's recommendations and approved shop drawings and as specified in the General Provisions and in compliance with the requirements of NEMA standards, NEC, and applicable ANSI Publications.

B. Mounting Height: Mount all panelboards either surface or flush mounted as shown such that the height of the top operating handle does not exceed 6 feet 6 inches from the floor.

C. Coordination: Coordinate with other Work including cabling and wiring work to interface the installation of the panelboards.

D. Torque Requirements: Tighten electrical connectors and terminals, including screws and bolts, in accordance with the equipment manufacturer's published torque tightening values for the equipment connectors. Where manufacturer's torque requirements are not indicated, tighten connectors and terminals in accordance with UL 486A.

E. Circuit Breaker Handle Lock: Install circuit breaker handle clamp on each circuit breaker as indicated.

F. Directory: Provide a laminated typewritten directory with the following information:

1. Circuit number
2. Area served
3. Utilizing equipment

3.2 CLEANING AND PAINTING

A. Field Painting: Touch up scratched and marred surfaces to match the original finish.

END OF SECTION

SECTION 16445
MOTOR CONTROL CENTER

PART 1 GENERAL

1.1 SUMMARY

A. Section Includes: Requirements for providing new motor control centers.

B. Related Work Specified in Other Sections Includes:

1. Section 16050 - Basic Electrical Materials and Methods
2. Section 16060 - Grounding
3. Section 16075 - Electrical Identification
4. Section 16080 - Electrical Testing Requirements
5. Section 16110 - Wires and Cables

1.2 REFERENCES

A. Codes and standards referred to in this Section are:

1. IEEE C37.90 - IEEE Standard for Relay and Relay Systems Associated with Electrical Power Apparatus

2. IEEE C62.41 - IEEE Recommended Practice on Surge Voltages in Low Voltage AC Power Circuits

3. IEEE C62.45 - IEEE Guide on Surge Testing for Equipment Connected to Low Voltage AC Power Circuits

4. MIL-STD-220A - Method of Insertion-loss Measurement 12/1/59; with N1and N2 (Fed/mil H-q)

5. NEMA ICS 2 - Industrial Control and Systems Controllers, Contactors and Overload Relays Not More than 2000 Volts AC or 750 Volts DC.

6. NEMA ICS 3 - Industrial Control and Systems Factory Built Assemblies

7. NEMA 250 - Enclosures for Electrical Equipment (1000 Volts Maximum)

8. UL 486A - Wire Connectors and Soldering Lugs for Use With Copper Conductors

9. UL 845 - Motor Control Centers

10. UL 1283 - Electromagnetic Interference Filters

11. UL 1449 - Transient Voltage Surge Suppressors

1.3 SYSTEM DESCRIPTION

A. Design Requirements: Provide equipment capable of operating in an ambient

temperature range of 0 to 40 degrees C and humidity of up to 90 percent noncondensing.

1. Provide motor control centers designed for 480-volt, three-phase, three-wire, 60-hertz operation.

2. Provide all control devices in the center suitable for operation at 120-volts, 60-hertz, unless specifically noted otherwise.

3. Provide all control equipment and devices that meet the requirements of the 600-volt insulation class.

4. Provide motor control center to include the indicated number of 20-inch deep sections and the components arranged as shown.

5. Arrange the equipment for convenient and ready accessibility from the front for inspection and maintenance of devices, terminals and wiring.

1.4 SUBMITTALS

A. General: Furnish all submittals, including the following, as specified in the Specific/General Provisions and Section 16050.

B. Product Data and Information: Provide catalog data for all associated equipment and devices.

C. Shop Drawings: Furnish shop drawings customized to the project for motor control centers to include the following:

1. Outline drawings showing dimensions, weights, arrangement, elevations, identification of components and a nameplate schedule for all units.

2. Bill of materials including manufacturers' name and catalog number.

3. Interconnecting wiring diagrams, where required.

4. Individual schematic and wiring diagrams for each compartment.

5. Furnish details showing electrical connections between main and tie circuit breakers and corresponding main buses.

6. Furnish instruction booklets and time-current curves for each circuit breaker supplied.

7. Furnish the following information on surge protection devices (SPDs):

a. Verification that surge protection devices comply with UL 1449.

b. Actual let through voltage test data in the form of oscillograph results for both the ANSI/IEEE C62.41 Category C3 (combination wave) and B3 (ringwave) tests in accordance with ANSI/IEEE C62.45.

c. Spectrum analysis of each unit based on MIL-STD-220A test

procedures between 50 kHz and 200 kHz verifying that the device's noise attenuation exceeds 50 dB at 100 kHz.

d. Test reports from a recognized independent testing laboratory verifying the suppressor components can survive published surge current ratings on both a per mode and per phase basis using the IEEE C62.41, 8 x 20 microsecond current wave. Test data on individual modules are not acceptable. Obtain and enter full performance details on all motors and other equipment being served on the above drawings.

D. Quality Control: Furnish the following test reports and certificates as specified below:

1. Certified Shop Test Reports for motor control centers and related components. Provide a minimum of 15 days written notice prior to shop tests.

2. Detailed field test reports of all tests indicating test performed as specified, discrepancies found, and corrective action taken.

E. Operation and Maintenance Manuals: Furnish operation and maintenance manuals.

1.5 QUALITY ASSURANCE

A. Standards: Provide motor control centers in accordance with NEMAICS 2, ICS 3, and UL Standard No. 845.

B. Codes: Provide motor control centers in accordance with the NEC and local codes.

C. UL Label: Provide a UL Label on each vertical section of each motor control center.

1.6 DELIVERY, STORAGE AND HANDLING

A. General: Deliver, store, and handle all products and materials as specified in the Specific/General Provisions.

B. Shipping and Packing: Provide all structures, equipment and materials rigidly braced and protected against weather, damage, and undue strain during shipment.

C. Storage and Protection: Store all equipment and materials in a dry, covered, heated and ventilated location. Provide any additional measures in accordance with manufacturer's instructions.

1.7 SPARE PARTS

A. General: Furnish the following spare parts:

1. One set of contact tips, control power transformers and operating coils for each six or less of each size of motor starter.

2. One auxiliary contact unit or one set of auxiliary contact tips for each six or less motor control units.

3. Ten percent but not less than two complete control, latching and timing relays of each type used in motor control centers.

4. Two complete replacements of overload heater units for each catalog number installed in motor control centers and motor starters.

5. Two complete replacements of all LED indicating lamps and fuses used in the installation.

6. One complete magnetic starter with motor circuit protector for each size required.

7. Two sets of replacement indicating light color lenses of each color furnished.

8. One circuit breaker test unit.

9. Three 12-ounce spray cans of the final finish for touch-up

B. Packaging: Pack spare parts in containers bearing labels clearly designating contents and related pieces of equipment. Deliver spare parts in original factory packages. Identify all spare parts with information needed for reordering.

PART 2 PRODUCTS

2.1 MANUFACTURERS

A. Acceptable Manufacturers: Acceptable manufacturers are listed below. Other manufacturers of equivalent products may be submitted for review.

1. Motor Control Center:

a. Square-D Model 6 Series

b. Cutler-Hammer 2100 Series

2. Surge Protection Devices (SPDs):

a. Advanced Protection Technology

2.2 MOTOR CONTROL CENTER

A. Basic Structural Components: Provide totally enclosed, dead-front, rigid, NEMA 1, Motor Control Center in a self-supporting and freestanding structure.

1. Construct the various sections from channels not less than 12 gauge, formed into proper shape, suitably reinforced and welded. Grind all internal welds smooth and round off all corners to give a neat and pleasing appearance. Construct doors and covers from a minimum of 14-gauge steel sheets.

2. Provide steel bottom plates in each compartment section.

3. Provide hinges, screws, bolts, circuit breaker operating mechanisms, nameplate mounting screws and other metallic appurtenances with a non-corrodible metal covering.

6. Install full height steel barriers on each side of the tie breaker structure to prevent the passage of flames and ionized gases.

7. Provide each motor control center with a three-phase bus compartment at the top and a conduit and cable compartment at the top and bottom.

8. Provide the cable compartments that run the full length of the motor control center.

9. Provide access to cable compartments by means of removable hinged doors.

10. Provide each structure with a vertical wiring space between the starter cells and side sheet for unit wiring.

11. Equip the vertical wiring space with cable supports to hold the cables and wiring in place.

B. Bus Requirements: Provide main buses of tin plated copper bars across each structure, sized in accordance with UL temperature rise of 50 degrees C based on a 40-degree C ambient temperature.

1. Provide a 600-ampere minimum, main horizontal bus, unless otherwise shown.

2. Support all bus bars in each structure by means of bus supports fabricated from an insulating material.

3. Connect the horizontal bus to the incoming line circuit breakers and from both sides of the tie breaker with copper bars securely fastened in place.

4. Provide tin-plated vertical three-phase copper bus of sufficient size to carry loads served.

5. Insulate main and vertical buses over their entire length. Provide insulated covers over all bolted connections.

6. Separate the bus bar compartments from breaker and controller cubicles by insulated barriers or steel plates.

7. Provide a 300-ampere uninsulated copper grounding bus with lugs for connections to the plant grounding system in the bottom of each motor control center.

8. Brace all bus work suitably to withstand a minimum of 42,000 rms amperes symmetrical short circuit current. Substantiate construction by a certified laboratory test covering units of similar construction.

C. Individual Units: Provide motor control or circuit breaker units in combinations of not less than 6-inch modular heights.

1. Provide units of the plug-in or nonremovable type in accordance with the manufacturer's standard for type and size of controller.

2. Provide plug-in units within-plated, pressure-type line disconnecting stabs of high strength copper alloy. Hold each plug-in unit in place and arrange the units such that they can be removed or remounted readily without access to the rear of the structure.

3. Construct doors to be drip-proof and dust-tight. Provide all doors with hinges and screw fasteners for holding the doors closed. Fabricate each door as a part of the structure and not part of the unit.

7. Equip the doors for motor control compartments with a motor circuit protector operating mechanism, thermal overload relay reset mechanism, controls and indicating lights and other required devices as shown.

8. Equip the doors for branch feeder equipment with a circuit breaker operating mechanism.

9. Provide mechanical interlocks between the compartment door and circuit breaker operating mechanism to prevent opening of the door unless the breaker is in the OFF position, and to prevent closing the breaker unless the door is fully closed.

10. Provide circuit breaker operating mechanisms or handles that are padlockable in the OFF position with room for a minimum of three padlocks.

11. Provide units having devices that are serviceable from the front, without provisions for rear access.

12. Provide control power transformers, relays, timers and accessories for each unit as shown or specified.

D. Wiring:

1. Provide NEMA Class II Type B wiring for the motor control centers, including internal interlock and internal wiring between controller units and devices.

2. Provide internal wiring runs for interconnecting units with stranded switchboard wire having 600-volt rated, flame-resistant, type SIS insulation. Provide No. 14 AWG wire for control interconnections. Provide power connections as required for the service.

3. Provide wire markers at each end of all wires.

4. Where wiring connections are made to equipment mounted on hinged doors, provide connections with extra flexible wires suitably cabled together and cleated.

5. Provide the wiring of all control connections to individual terminal blocks at each motor starter. Locate terminal blocks for front access.

6. Provide interlocking wiring between units of a motor control center or between units of grouped centers as internal wiring with terminals provided for external connections.

7. Provide sufficient pull apart terminal blocks for all devices external to the motor control center.

E. Magnetic Starters: Provide 480-volt, 3-phase, 60-hertz across-the-line combination motor circuit breakers and magnetic starters having individual control power transformers.

1. Provide full-voltage nonreversing starters as required.

2. Provide starter contacts of the replaceable, spring-loaded, wedge type with silver-cadmium oxide-plated contact surfaces. Provide replaceable coils of the epoxy sealed type.

3. Thermal Overload Elements: Provide each magnetic starter unit with a Class 20 thermal overload element and all required accessories.

a. Provide overload relays of the bimetallic type with an adjustment knob that allow plus or minus 15 percent adjustment of the nominal heater rating.

b. Provide and adjust overload relays to match the associated motor nameplate running current rating. Size the overload relays after approval of the corresponding motor.

c. Provide a set of isolated normally-open and normally-closed contacts for each overload relay.

G. Feeder Circuit Breakers: Provide molded-case type, two- or three-pole feeder circuit breakers as shown, with a minimum voltage rating of 600-volt ac.

1. Interrupting Ratings: Provide an interrupting capacity of 42,000 rms symmetrical amperes at 480 volts. Base interrupting rating on the IEEE and NEMA Standard duty cycle for this class of equipment.

2. Provide circuit breakers trip units as follows:

a. Provide individual, thermal-magnetic trip units for all frame sizes smaller than 400 amperes.

b. Provide trip units that actuate a common tripping bar to open all poles when an overload or short circuit occurs on any one.

c. Provide trip elements with inverse time tripping and instantaneous tripping at about ten times the normal trip device rating.

d. Provide circuit breakers with trip-free handles.

H. Main Circuit Breaker: Provide main circuit breaker rated as shown, of equal construction to the feeder breakers,

I. Surge Protection Devices (SPDs):

1. Provide surge protection devices (SPDs) that complies with UL 1449.

2. Provide units with a maximum, continuous-operating voltage that exceeds 115 percent of the nominal system operating voltage.

3. Provide surge protection devices suitable for delta configured systems.

4. Provide surge protection device that distribute the surge current to all MOV components to ensure equal stressing and maximum performance and provides equal impedance paths to each matched MOV.

6. Provide high-performance EMI/RFI noise rejection filters that attenuate the electric line noise at least 50 dB at 100 kHz using the MIL-STD-220A insertion loss test method.

7. Wire internal components with connections utilizing low impedance conductors and compression fittings.

8. Provide a monitoring panel for each system that incorporates the following features:

   a. Green/red solid state indicator light to indicate which phase(s) have been damaged.

9. Provide SPDs suitable for service entrance or branch location application with a minimum total surge current capable of withstanding 160kA per phase respectively.

10. Provide SPD with circuit breaker sized per manufacturer’s recommendations. Circuit breaker handle for SPD shall extend through SPD door.

J. Control Power Transformers: Provide individual control power transformers for each starter to derive the 120 volts for the unit's control circuit. Ground the unfused leg of the secondary to the enclosure.

K. Selector Switches and Indicating Lights: Provide Hand-Off-Auto (HOA) selector switches Sludge Pumps and sump Pump. Provide start/stop selector switches for all Longitudinal Collector Drives and Exhaust Fan. All equipment shall have a red, running indication light. Include legend plates having the same type, appearance, shape and catalog number throughout each motor control center.

L. Control Components: Provide control components including elapsed time meters, HOA selector switches, pushbuttons, control relays, latching relays, time delay relays, reset timers, repeat cycle timers, alternators, phase failure and undervoltage relay and ground fault protection relays as indicated.

M. Feeder Cable Terminals: Provide closed-end, compression-type, solderless connectors and terminals, suitable for copper conductors for terminating cables.

N. Wiring Schematic: Provide a schematic wiring diagram of each unit and affix it to the inside of the door of that unit.

O. Identification: Provide nameplates having the same type, appearance and shape throughout each motor control center in accordance with the requirements of Section 16075.

2.3 SOURCE QUALITY CONTROL

A. Tests: Shop test each motor control center in accordance with IEEE and NEMA standards.

1. Operational Tests: After the equipment has been completely assembled, perform operational tests to determine the general operating conditions and circuit continuity. Also, perform high potential tests and other standard tests for that particular class of equipment.

PART 3 EXECUTION

3.1 INSTALLATION

A. General: Install all equipment in accordance with the manufacturer's recommendations and approved shop drawings and as specified in the Specific/General Provisions.

B. Overloads: Adjust the thermal overloads on each phase of the starter units to the actual motor installed.

C. Cable Connections: Terminate and label all field wiring per the approved diagrams.

D. Torque Requirements: Tighten electrical connectors and terminals, including screws and bolts, in accordance with equipment manufacturers' published torque tightening recommendations. Where manufacturers' torquing requirements are not available, tighten connectors and terminals in accordance with UL Standard 486A.

3.2 FIELD QUALITY CONTROL

A. Inspections: Inspect, adjust and check the installation for physical alignment, cable terminations and ventilation.

B. Tests: Perform the following field tests:

1. Close and open each circuit breaker and motor circuit protector to test operation.

2. Energize the motor control center and test for hot spots.

3. When site conditions permit, energize and de-energize each equipment item served by each motor control center, testing the complete control sequence of each item.

3.3 OPERATION DEMONSTRATION

A. Manufacturer's Representative: Furnish the services of a qualified, factory-trained service engineer to assist in installation, start-up, field testing, calibration, placing into operation and provide training of each motor control center.

1. Furnish the services of a service engineer when the equipment is placed into operation.

2. Furnish the services of a service engineer at job site as often as necessary until all problems are corrected and the equipment installation and operation are satisfactory.

3. Training: Following completion of installation and field testing provide training for 6 employees of the City in the proper operation, troubleshooting and maintenance of the equipment as outlined below. All training will be at the City's facilities at a time agreeable to the City:

a. Operational Training: A minimum of two 4-hour sessions combining both classroom and hands-on instruction, excluding travel time.

b. Maintenance Training: A minimum of two 4-hour sessions combining both classroom and hands-on instruction, excluding travel time.

B. Operation and Maintenance: Furnish operation and maintenance instructions as specified in the General Provisions.

3.4 CLEANING AND PAINTING

A. Field Painting: Clean and touch up any scratched or marred surface to match original finish.

END OF SECTION

SECTION 16460
GENERAL PURPOSE DRY TYPE TRANSFORMERS

PART 1 GENERAL

1.1 SUMMARY

A. Section Includes: Requirements for furnishing and installing ventilated, dry-type transformers.

B. Related Work Specified in Other Sections Includes:

1. Section 16050 - Basic Electrical Materials and Methods
2. Section 16060 - Grounding

1.2 REFERENCES

A. Codes and standards referred to in this Section are:

1. ASTM D 635 - Test Method for Rate of Burning and/or Extent and Time of Burning of Self-Supporting Plastics in a Horizontal Position

2. NEC - National Electrical Code

3. NEMA ST 20 - Dry Type Transformers for General Applications

4. NEMA TP 1 - Guide for Determining Energy Efficiency for Distribution Transformers

1.3 SUBMITTALS

A. General: Furnish all submittals, including the following, as specified in the Specific/General Provisions.

B. Product Data and Information: Furnish manufacturer's data including:

1. KVA ratings
2. Service voltages
3. Impedance and X/R ratio
4. Number of phases
5. Taps
6. Insulation class
7. Sound level
8. Dimensions
9. Weights
10. Mounting details

C. Quality Control: Furnish the following:

1. Test Reports:

a. Certified production reports for sound-level and temperature in accordance with NEMA ST 20

2. Manufacturer's Installation Instructions

D. Operations and Maintenance Manuals: Furnish 6 copies of manufacturer's operations and maintenance manuals.

1.4 QUALITY ASSURANCE

A. UL Label: Provide UL listing label or mark.

B. Energy Star Compliance: Provide “Energy Star” label for all transformers rated more than15 kVA in accordance with NEMA TP 1.

1.5 DELIVERY, STORAGE AND HANDLING

A. General: Deliver, store and handle all products and materials as specified in the Specific/General Provisions.

PART 2 PRODUCTS

2.1 MANUFACTURERS

A. Acceptable Manufacturers: Acceptable manufacturers are listed below. Other manufacturers of equivalent products may be submitted for review.

1. Cutler Hammer
2. General Electric Company
3. Square D Company

2.2 MATERIALS

A. General: Provide dry-type transformers suitable for indoor use.

B. Insulation: Provide transformers above 15 kVA with 220-degree C temperature insulation materials. Provide transformers 15 kVA and below with a minimum of 185-degree C insulation materials.

C. Flame Retardant Materials: Provide transformers with flame retardant materials that will not support combustion as defined in ASTM D 635.

2.3 FABRICATION

A. Transformer Taps: Provide transformers rated over 15 kVA with at least two 2-1/2 percent full capacity taps above and below nominal in the primary winding.
Provide transformers rated 15 kVA and below with two five percent taps or with four 2-1/2 percent taps below rated voltage on the primary winding.

B. Windings: Provide primary and secondary windings fabricated from copper conductors.

C. Voltage and KVA Ratings: Provide three-phase or single-phase transformers with primary and secondary voltages and kVA ratings as specified.

D. Connections:

1. Three phase: Primary - 3-wire Delta; Secondary - 4-wire, solidly-grounded wye.

E. Continuous Operations: Provide transformers suitable for continuous operation at the rated kVA with a normal life expectancy as defined in NEMA ST 20 and the performance obtained without exceeding 115 degrees C average temperature rise by resistance or 145 degrees C hot spot temperature rise in 40-degree C maximum ambient and 30-degree C average ambient. Do not provide transformers that exceed 185-degree C maximum coil hot spot temperature.

F. K-Factor: Provide three-phase transformers with a K-Factor not less than 13.

G. Electrostatic Shields: Provide electrostatic shields between windings.

H. Construction: Provide transformers with core mounting frames and enclosures of welded and bolted construction with sufficient mechanical rigidity and strength to withstand shipping, erection and short circuit stresses.

I. Isolation transformer 'IT1' shall be 480V, 3-phase, delta primary: 277/480V, 3-phase, Wye secondary. Transformer shall be 15 KVA.

J. Sound Levels: Do not provide transformers that exceed the following sound levels:

	Average Sound Level in dB
Transformer kVA	NEMA ST 20
0 – 09	40
10 - 50	45
51 – 150	50

K. Lifting Lugs and Jacking Plates: Provide lifting lugs and jacking plates as required on the transformer.

PART 3 EXECUTION

3.1 INSTALLATION

A. General: Install all transformers and provide guards as specified by the latest NEC and ANSI standards, and in accordance with manufacturer's instructions.

B. Clearances: Provide clearance around the transformer meeting the manufacturer's recommendation.

C. Supports: Provide suitable supports for all transformers. Mount transformers on one inch of Korfund, or equal sound-absorbent material.

D. Primary Disconnect: Provide primary disconnect circuit breaker or disconnect switch as shown or required.

3.2 CLEANING AND PAINTING

A. Field Painting: Clean and touch up scratched and marred surfaces to match the original finish.

END OF SECTION

SECTION 16500
LIGHTING FIXTURES

PART 1 GENERAL

1.1 SUMMARY

A. Section Includes: Requirements for providing complete lighting systems as specified and as shown.

B. Related Work Specified in Other Sections Includes:

1. Section 16050 - Basic Electrical Materials and Methods
2. Section 16075 - Electrical Identification
3. Section 16110 – Conduit, wiring and Grounding
4. Section 16140 - Wiring Devices
5. Section 16421 – Lighting Control Cabinet

1.2 REFERENCES

A. Codes and standards referred to in this Section are:

1. NEC - National Electrical Code
2. UL 924 - Emergency Lighting and Power Equipment

1.3 SYSTEM DESCRIPTION

A. System Components: Provide all interior and exterior lighting fixtures including all supports, plaster frames, trim rings, outlet boxes, light standards, concrete bases, ground rods, and all accessories and appurtenances required for complete functioning lighting systems, as shown and as specified.

B. Performance Requirements: Provide lighting systems that adhere to code and are in accordance with manufacturers' recommendations.

1.4 SUBMITTALS

A. General: Furnish all submittals, including the following, as specified in the Specific/General Provisions.

B. Manufacturer's Data and Information:

1. Furnish catalog data for all equipment provided under this section.

2. Furnish complete photometric data reports from an independent testing laboratory with shop drawings for each luminaire. Luminaires submitted without photometric data will not be reviewed.

C. Shop Drawings: Furnish layout drawings showing arrangement, circuiting, erection requirements of equipment and details of construction and assembly.

D. Quality Control: Furnish the following:
1. Manufacturer's certificates for equipment performance.
2. Manufacturer's test reports.

3. Manufacturer’s installation instructions.

E. Operation and Maintenance Manuals: Furnish two copies of the operation and maintenance manuals for lighting equipment.

1.5 QUALITY ASSURANCE

A. Codes: Provide materials and workmanship that meet the requirements of the NFPA Standards and the National Electrical Code.

B. Regulatory Requirements: Provide UL and FMS listed and labeled lighting equipment.

1.6 DELIVERY, STORAGE AND HANDLING

A. General: Deliver, store and handle all products and materials as specified in accordance with the Specific/General Provisions.

B. Storage and Protection: Store and protect equipment, components and accessories in accordance with the manufacturer's instructions.

1.7 SPARE PARTS

A. General: Furnish the following spare parts:

1. Fixtures: Provide one lighting fixture of each type for every 40, but not less than one, for each type provided.

2. Ballasts: Provide two of each type of:

   a. Fluorescent ballast provided.

3. Fluorescent Lamps: Provide 20 percent, but not less than 12, of each type of fluorescent lamp provided.
4. LED drivers: Provide 2 of each type of LED driver provided.

5. Lens and Globes: Provide 10 percent, but not less than 6, of each type of lens or globes provided.

6. Provide one contactor of each type provided.

7. Provide one of each type photo cell provided.

8. Provide five sets of special tools that may be required for maintenance of lighting fixtures.

B. Packaging: Deliver all spare parts neatly wrapped or boxed, indexed and tagged with complete information for use and reordering.

PART 2 PRODUCTS

2.1 MANUFACTURERS

A. General: The lighting fixture descriptions and catalog numbers listed in the Lighting Fixture Schedule are used to indicate the acceptable quality, design and

distribution characteristics of approved lighting fixtures.

B. Acceptable Manufacturers: Acceptable manufacturers are listed below. Other manufacturers of equivalent products may be submitted for review.

1. Lamps:

a. General Electric Company Lamp Division
b. Philips Lighting Company
c. Osram Sylvania
d. Venture

2. Ballasts:

a. Advance Transformer Company
b. Universal Manufacturing Corporation
c. Osram Sylvania

3. Photocells:
a. Tork
b. Intermatic

2.2 MATERIALS

A. General: Provide lighting fixtures complete with all required lamps, ballasts, fittings, receptacles, gaskets, globes and diffusers, as shown and scheduled.

B. Wiring Channel Construction: Construct the wiring channels to permit access to the auxiliaries and sockets for repair or replacement of components without removal of the fixture.

C. Fluorescent Fixture Diffusers: Secure diffusers for fluorescent fixtures securely in place in a manner which enables them to be removed when required.

D. Lamp Holders: Rigidly support screw-type, lamp holders, secure them against turning, and install them in a manner that allows for easy replacement. In general, fixtures designed to accept lamps of different wattages shall have adjustable sockets to allow for variations in lamp light centers. Provide brass, shell-type lamp holders. Aluminum shells will not be accepted.

E. Insulation: Provide a wire insulation systems and components that are capable of withstanding the temperatures to which they will be subjected in the fixture, while maintaining normal expected ballast life.

2.3 COMPONENTS

A. Ballasts:

1. Provide Class P ballasts for fluorescent fixtures bearing CBM and UL labels having a high power factor. Provide non-PCB capacitors. Provide ballasts with the quietest sound rating available for its type. In general, use A-sound rated, 34-watt, rapid-start, energy saving ballasts. Provide two-lamp ballasts whenever possible, unless specifically noted otherwise.

2.4 EXIT SIGNS

A. Nonhazardous Areas:

1. General: Provide fully-automatic, self-contained, battery-pack, LED type exit signs, normally operated from the ac wiring system, but capable of remaining lighted for a period of 1.5 hours during an ac power outage. Provide exit signs suitable for dual voltage input with surge protection suitable for operation on either 120 volts or 277 volts. Equip each sign with nickel cadmium batteries and a totally solid-state charger which constantly evaluates the state of charge of the batteries and keeps them fully charged. Provide a charger that is capable of fully recharging the batteries in 24 hours, following a discharge. Provide a press-to-test switch located on the bottom of the housing to test the lamps and battery, and an ac indicator lamp to indicate that the charger is functioning and the unit is in operating condition. Provide UL listed exit signs complying with OSHA regulations.

2. Construction: Provide exit signs having a cast-aluminum housing with field selectable direction arrows, a red, translucent optical diffuser over the LED lamps, single or double-faced, as listed in the Lighting Fixture Schedule or as shown.

2.5 OUTDOOR LIGHTING

A. General: Provide outdoor lighting luminaires and standards as listed in the Lighting Fixture Schedule.

B. Mounting: Mount outdoor lighting on structures as shown.

2.6 LIGHTING CONTROL PANELS

A. General: Provide lighting control panels consisting of a NEMA Type 1 enclosure with contactor and controls as shown.

B. Contactor: Provide contactor, as specified in Section 16421. Provide contactor with vibration mounts.

C. Control Devices: Provide selector switches as specified in Section 16491.

2.7 PHOTOCELLS

A. General: Provide SPST photocells suitable for 120-volt operation and capable of switching 1000 VA. Provide photocells that turn on at light levels of 1.5 to 5.5 footcandles and turn off at approximately three times the turn-on value. Incorporate a built-in, approximately 2 minute time delay to avoid false switching due to lights from vehicles or lightning. Provide photocells with a 1/2-inch conduit fitting and a die-cast zinc housing suitable of operating from -40 degrees F to 140 degrees F.

PART 3 EXECUTION

3.1 PREPARATION

A. Packing: Suitably pack and rigidly brace all equipment and protect it against

weather, damage and undue strain during shipment.

3.2 INSTALLATION

A. General: Install lighting fixtures and lamps in accordance with the manufacturer's recommendations and approved shop drawings. Locate fixtures to suit the architectural details of the area involved. Install fixtures in the same location where replacing an existing fixture or in close proximity. Install lamps of proper type, wattage and voltage rating in fixtures prior to completion of project. Install all fixtures to comply with applicable provisions of NEC.

B. Obstructions: In areas, such as equipment and mechanical rooms, which have obstructions at the ceiling or walls such as ducts, large pipes, groups of pipes, and like items, install fixtures so that maximum utilization of the light is achieved.

C. Accessories: Provide straps, mounting plates, nipples, plaster rings, brackets and all accessories necessary for proper installation.

D. Suspended Fixture Support: Support suspended fixtures by approved means, consisting of rods, stems attached to studs, hickeys and suitable outlet box cover aligners of the shock-absorbing, vaportight or swivel type having flexible joints permitting fixtures to hang plumb. Install stems using 3/4-inch galvanized steel conduits, unless otherwise specified. Where indicated or required, support fixtures by means of a suspended channel. Provide channels that meet the requirements for the type of conduit provided. Where the channel is used as the wiring raceway, provide closure strips, end caps and fittings as required for an approved raceway.

E. Photocells: Install photocells 6-inches above roof peak with the lens facing north.

F. Nameplates: Install nameplates as specified in Section 16075.

3.3 FIELD QUALITY CONTROL

A. Testing: Test the entire lighting system for continuity and balance after installation and prior to acceptance.

3.4 ADJUSTING

A. Fixtures: Aim and adjust fixtures as shown.

B. Relamping: Relamp fixtures that have failed lamps at substantial completion.

3.5 CLEANING AND PAINTING

A. Steel Surfaces: Prior to final completion of the Work, thoroughly clean all steel surfaces and retouch all scratches and abrasions. Use the same paint as used for shop finishing coats.

B. Photometric Control Surfaces: Clean photometric control surfaces as recommended by the manufacturer.

END OF SECTION