The Enclosed Document Is Provided For Your Convenience.

Please Email ALL Questions:

MailTo:ContractAdministration@TampaGov.net

Please Let Us Know If You Plan To Bid

City of Tampa
Contract Administration Department
306 E. Jackson St. #280A4N
Tampa, FL 33602
(813)274-8456

TPB014-001

LOCATION MAP

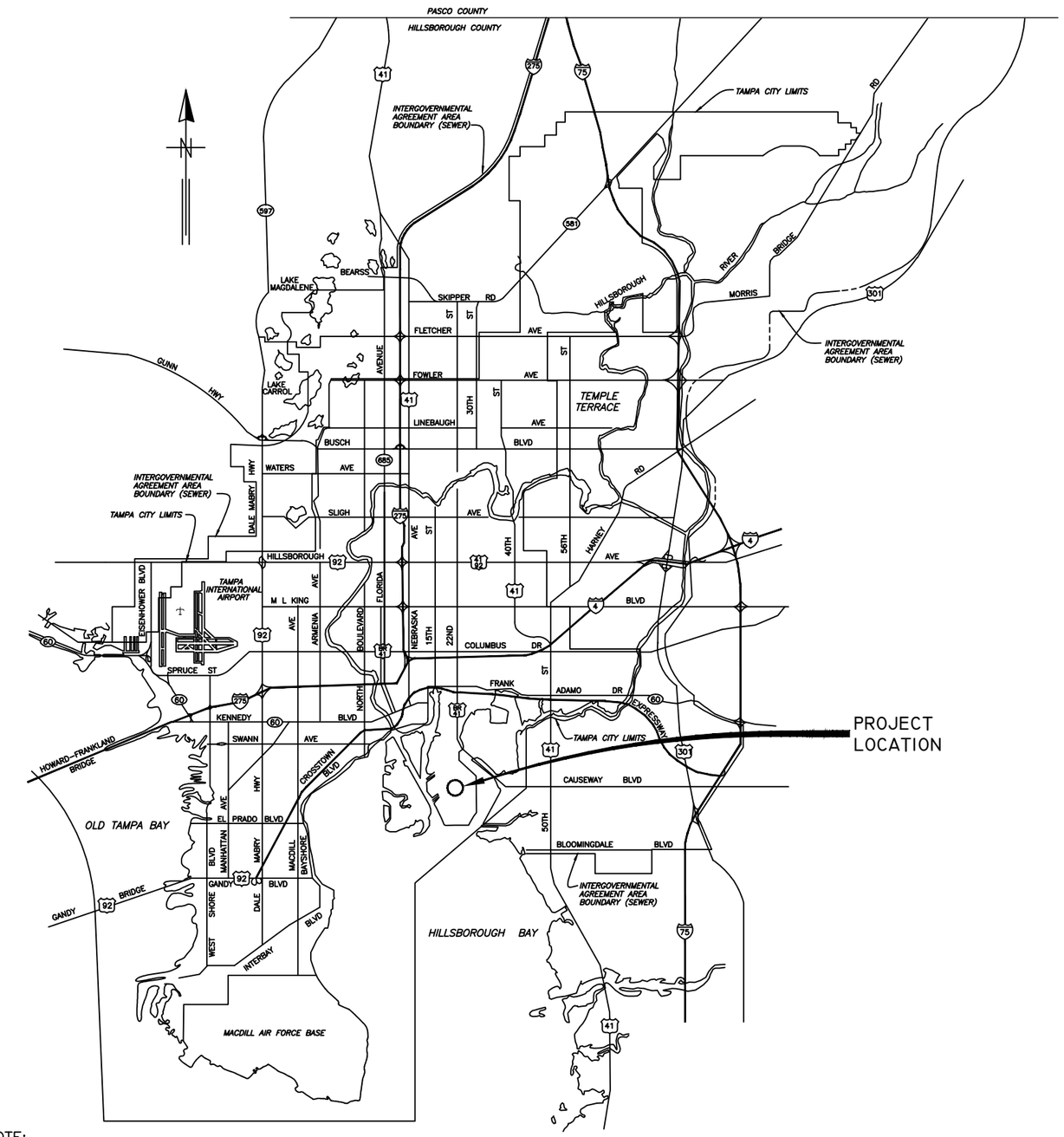

NOTE:

ATTENTION IS DIRECTED TO THE FACT THAT THESE PLANS MAY HAVE BEEN REDUCED IN SIZE BY REPRODUCTION. THIS MUST BE CONSIDERED WHEN OBTAINING SCALED DATA.

CITY of TAMPA

CITY OF TAMPA FLORIDA
MASCOTTE
ORGANIZED JULY 15 1887

WASTEWATER DEPARTMENT

PLANS FOR

HOWARD F. CURREN AWTP
MIXED SLUDGE PUMPING STATION
PUMP REPLACEMENT

CONTRACT No. 14-C-00022
ORACLE No. 1000102

JACINTO CARLOS FERRAS, P.E. #49454
DESIGN DIVISION HEAD
WASTEWATER DEPARTMENT

TIMOTHY THOMAS, P.E. #47079
ELECTRICAL ENGINEER
TRICON CONSULTING ENGINEERS

DES: D.R.
DRN: BB
CKD:
DATE:

No.	DATE	REVISIONS
3		
2		
1		

CITY of TAMPA
HOWARD F. CURREN
ADVANCED WASTEWATER TREATMENT PLANT

• COVER SHEET •

W.O. 5983
SHEET 1 OF 28

TPB014-002

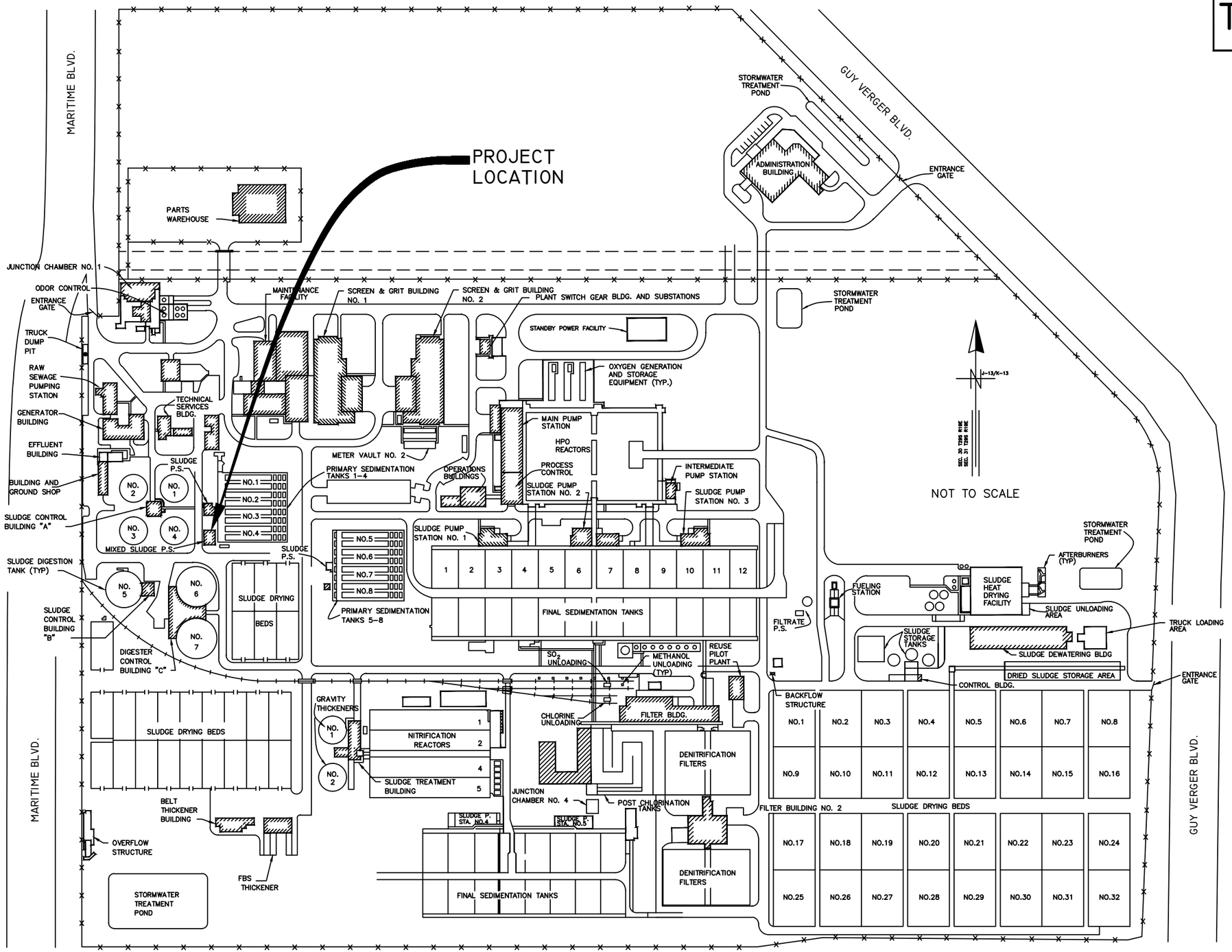

User: ssif Drawing Name: K:\WW_Projects\2013\2013_5983_Mixed Sludge PS Rehab\Dwg\5983-Sheet-02&03.dwg
Layout- Sep 02, 2014 - 3:30pm CTB - MONOCHROME.CTB

JACINTO CARLOS FERRAS, P.E. #49454
DESIGN DIVISION HEAD
WASTEWATER DEPARTMENT

No.	DATE	REVISIONS
3		
2		
1		

DES: D.R.
DRN:
CKD:
DATE:

CITY of TAMPA
HOWARD F. CURREN
ADVANCED WASTEWATER TREATMENT PLANT

HOWARD F. CURREN A.W.T.P.
MIXED SLUDGE PUMPING STATION PUMP REPLACEMENT
PROJECT MAP

W.O. 5983
SHEET 2 OF 28

TPB014-003

INDEX

SHT No.	DESCRIPTION
1	COVER SHEET
2	PROJECT MAP
3	NOTES AND INDEX
4	DEMOLITION PLANS – PLAN VIEW
5	DEMOLITION PLANS – SECTION A–A
6	DEMOLITION PLANS – SECTION B–B
7	PROPOSED PLANS – PLAN VIEW
8	PROPOSED PLANS – SECTION A–A
9	PROPOSED PLANS – SECTION B–B
10	MISCELLANEOUS DETAILS
E1/11	ELECTRICAL SCOPE, NOTES AND LEGEND
E2/12	PROPOSED OVERALL ONE–LINE DIAGRAM
E3/13	EXISTING PUMPING SYSTEM ONE–LINE DIAGRAM AND DEMOLITION
E4/14	PROPOSED PUMPING SYSTEM ONE–LINE DIAGRAM
E5/15	EXISTING MCC & INSTRUMENTATION PANEL ELEVATION
E6/16	EXISTING MCC SCHEDULES
E7/17	PROPOSED MCC & INSTRUMENTATION PANEL ELEVATION
E8/18	PROPOSED MCC SCHEDULES
E9/19	SLUDGE PUMP No. 1 CONTROLS
E10/20	EXISTING ELECTRICAL PLAN
E11/21	ELECTRICAL DEMOLITION PLAN
E12/22	PROPOSED ELECTRICAL PLAN
E13/23	CONDUIT AND CONDUCTOR SCHEDULE
E14/24	SCHEMATIC 1/4
E15/25	SCHEMATIC 2/4
E16/26	SCHEMATIC 3/4
E17/27	SCHEMATIC 4/4
E18/28	DOCUMENTATION OF SOFT STARTER PARAMETERS

GENERAL NOTES

1. CONTRACTOR IS RESPONSIBLE FOR OBTAINING ALL FIELD MEASUREMENTS AND VERIFYING THE LOCATIONS, ELEVATIONS, AND DIMENSIONS OF ALL EXISTING PIPING, STRUCTURES, AND OTHER FEATURES AFFECTING HIS WORK PRIOR TO SUBMITTAL OF SHOP DRAWINGS OR STARTING CONSTRUCTION.
2. PROPOSED PUMP SHALL BE A 60 HP MODEL F4K–S SCREW CENTRIFUGAL PUMP AS MANUFACTURED BY WEMCO–HIDROSTAL. SEE SPECIFICATIONS FOR FURTHER INFORMATION.
3. PROPOSED GRINDER SHALL BE A 5 HP MODEL 30001–18–10 MUFFIN MONSTER GRINDER AS MANUFACTURED BY JWC ENVIRONMENTAL. SEE SPECIFICATION FOR FURTHER INFORMATION.
4. ALL PIPE AND FITTINGS SHALL BE CLASS 53 DUCTILE IRON PIPE (DIP) LINED WITH PROTECTO 401 OR APPROVED EQUAL. FITTINGS SHALL BE LONG–RADIUS (C110) TO MATCH EXISTING.
5. PRESSURE GAGES SHALL BE EQUIPPED WITH STAINLESS STEEL DIAPHRAGM SEALS AND ISOLATION VALVES.
6. MECHANICAL SEAL DRAIN PIPING SHALL BE INSTALLED TO DISCHARGE INTO THE EXISTING FLOOR DRAINS
7. ALL PIPE, FITTINGS, HANGERS, SUPPORTS, AND EQUIPMENT SHALL BE PAINTED IN ACCORDANCE WITH CONTRACT SPECIFICATIONS. HANGERS, SUPPORTS AND ALL HARDWARE SHALL BE 316 STAINLESS STEEL.
8. OPENING IN WET WELL SHALL BE LARGE ENOUGH TO ACCOMMODATE LINK SEAL AND PIPE'S OUTSIDE DIAMETER. DRY PIT SIDE OF SPOOL PIECE SHALL BE EQUIPPED WITH A SERIES 2100 MEGA–FLANGE RESTRAINED FLANGE ADAPTOR WITH STAINLESS STEEL HARDWARE AS MANUFACTURED BY EBAA IRON OR APPROVED EQUAL.
9. PUMP STATION SHUTDOWNS ARE REQUIRED FOR THE INSTALLATION AND DISASSEMBLY OF THE SUCTION PIPE THROUGH THE WET WELL WALL. SHUTDOWNS SHALL BE LIMITED TO A MAXIMUM 4 HOURS PER SHUT DOWN. ALL SHUTDOWNS SHALL BE DONE AS PLANT OPERATIONS PERMIT AND WITH A MINIMUM 72 HOURS ADVANCE NOTICE. IT IS ESSENTIAL THAT THE CONTRACTOR HAVE ALL NECESSARY MATERIALS AND EQUIPMENT ON–SITE AND "READY TO GO" AND ALL PIPING PRE–ASSEMBLED (IF POSSIBLE) BEFORE THE START OF THE SHUTDOWN. THE MINIMUM DURATION BETWEEN SHUTDOWNS SHALL BE 24 HOURS.
10. CONTRACTOR SHALL SUBMIT SHOP DRAWINGS FOR PIPE HANGERS AND SUPPORTS. PIPE HANGERS AND SUPPORTS SHALL BE SCREW ADJUSTABLE AND SHALL BE ADEQUATE TO MAINTAIN THE PIPELINES AND EQUIPMENT IN PROPER ALIGNMENT UNDER ALL SERVICE CONDITIONS. FLOOR PIPE SUPPORTS SHALL BE BOLTED TO THE FLOOR WITH 316 S.S. EPOXY ANCHORS.
11. ALL METAL SURFACES THAT COME IN CONTACT WITH CONCRETE SURFACES OR DISSIMILAR METALS SHALL RECEIVE 2–COATS OF CARBOLINE BITUMINOUS 50 COATING OR APPROVED EQUAL.
12. CONTRACTOR SHALL SUBMIT DETAILS OF THE PIPE LAYOUT FOR APPROVAL BY THE ENGINEER PRIOR TO FABRICATION AND ERECTION. DETAILS SHALL INCLUDE ALL DIMENSIONS OF PIPING TO EXISTING STRUCTURES AND EQUIPMENT.
13. CONCRETE SHALL HAVE A 28–DAY COMPRESSIVE STRENGTH OF 4,000 PSI AND STEEL REINFORCEMENT SHALL BE GRADE 60. ALL STEEL REINFORCEMENT SHALL BE DETAILED ACCORDING TO ACI 315–99 "DETAILS AND DETAILING OF CONCRETE REINFORCEMENT". STEEL PLACEMENT SHALL BE REFLECTED ON SHOP DRAWINGS AND SUBMITTED FOR THE ENGINEER'S APPROVAL.
14. OSHA STANDARD SAFETY EQUIPMENT SUCH AS SAFETY HARNESSES, GAS MONITORS, LOWER EXPLOSIVE LIMIT (LEL) DETECTORS, BREATHING APPARATUS, ETC. SHALL BE UTILIZED WHERE THE WORK DICTATES THEIR USE.
15. ALL HARDWARE INCLUDING BOLTS, EXPANSION ANCHORS, WASHERS, NUTS, ETC. SHALL BE 316 STAINLESS STEEL UNLESS OTHERWISE SPECIFIED.

DEMOLITION NOTES

1. UNLESS OTHERWISE NOTED, ALL ITEMS SHOWN IN HATCHED AREAS ARE TO BE DEMOLISHED AND REMOVED.
2. ALL PIPE SUPPORTS AND CONCRETE ANCHORS SHALL BE GROUND BACK AND SEALED.
3. WHERE NEW CONCRETE IS TO BE INSTALLED OVER OR NEXT TO EXISTING CONCRETE SURFACES, CONTRACTOR SHALL ROUGHEN EXISTING SURFACES AND APPLY AN APPROVED EPOXY BONDING AGENT. WHERE SECTIONS OF CONCRETE ARE TO BE CUT AND A SIDE IS TO REMAIN EXPOSED, EXISTING REINFORCEMENT STEEL SHALL BE GROUND BACK 1" AND THE SURFACE RESTORED WITH GROUT.
4. ALL ITEMS DESIGNATED FOR REMOVAL SHALL BE PROPERLY DISPOSED OF BY THE CONTRACTOR AS DIRECTED BY TREATMENT PLANT PERSONNEL.

JACINTO CARLOS FERRAS, P.E. #49454
DESIGN DIVISION HEAD
WASTEWATER DEPARTMENT

No.	DATE	REVISIONS
3		
2		
1		

DES: D.R.
DRN:
CKD:
DATE:

CITY of TAMPA
HOWARD F. CURREN
ADVANCED WASTEWATER TREATMENT PLANT

HOWARD F. CURREN A.W.T.P.
MIXED SLUDGE PUMPING STATION PUMP REPLACEMENT
NOTES AND INDEX

W.O. 5983
SHEET 3 OF 28

User: ss1f Drawing Name: K:\WW_Projects\2013\2013_5983_Mixed Sludge PS Rehab\Dwg\5983-Sheet-02&03.dwg
Layout- Sep 02, 2014 - 3:30pm CTB - MONOCHROME.CTB

TPB014-004

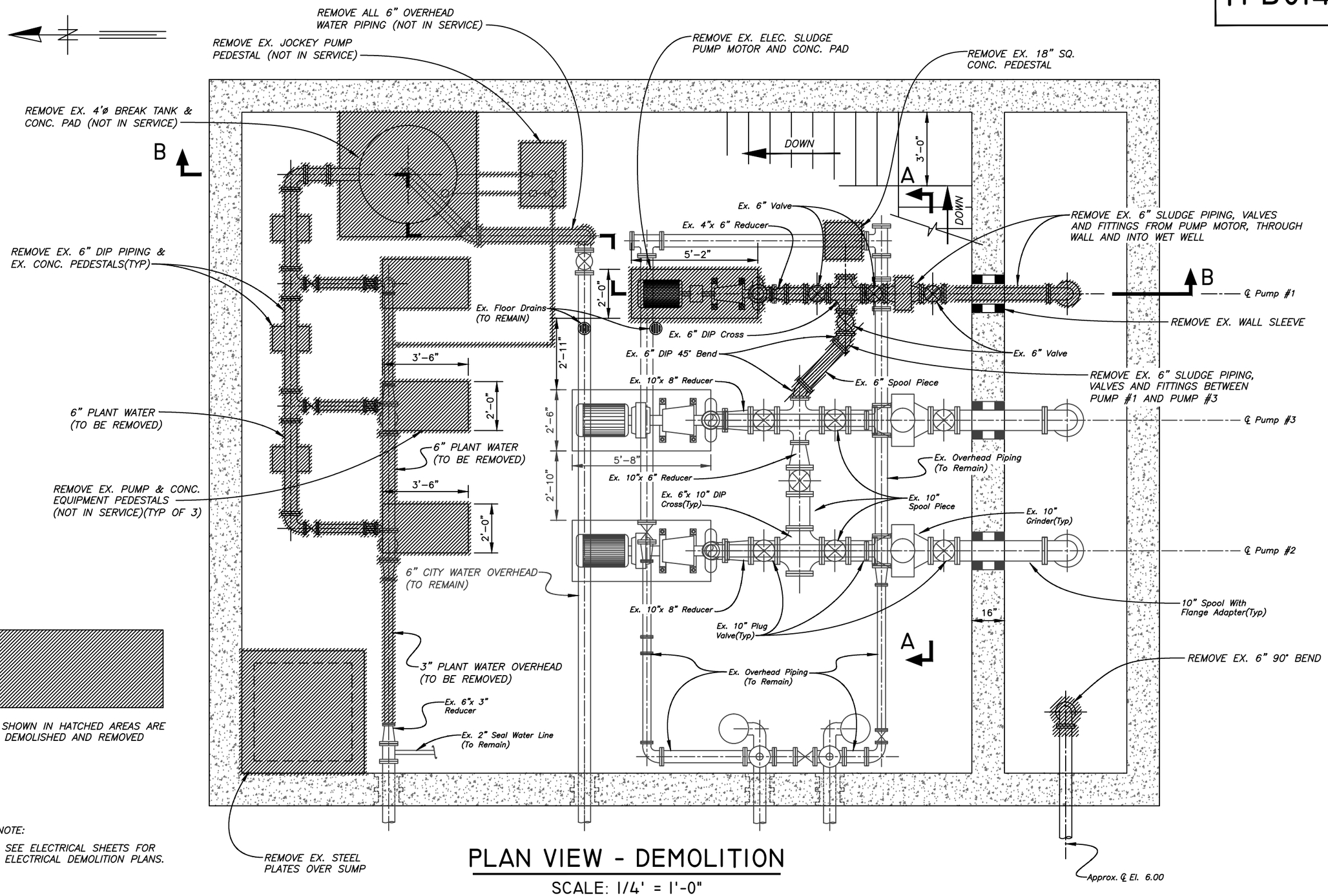

PLAN VIEW - DEMOLITION

SCALE: 1/4' = 1'-0"

	No.	DATE	REVISIONS
	3		
	2		
	1		

JACINTO CARLOS FERRAS, P.E. #49454
DESIGN DIVISION HEAD
WASTEWATER DEPARTMENT

DES: D.R.
DRN: BB
CKD:
DATE:

CITY of TAMPA
WASTEWATER DEPARTMENT

HOWARD F. CURREN A.W.T.P.
MIXED SLUDGE PUMPING STATION PUMP REPLACEMENT
DEMOLITION PLAN - PLAN VIEW

W.O. 5983
SHEET 4 OF 28

User: ssif Drawing Name: K:\WW_Projects\2014\2014-0483\5983_Mixed Sludge PS Rehab\Dwg\5983-Sheet-04&07.dwg
Layout- Sep 04, 2014 - 3:24pm

TPB014-005

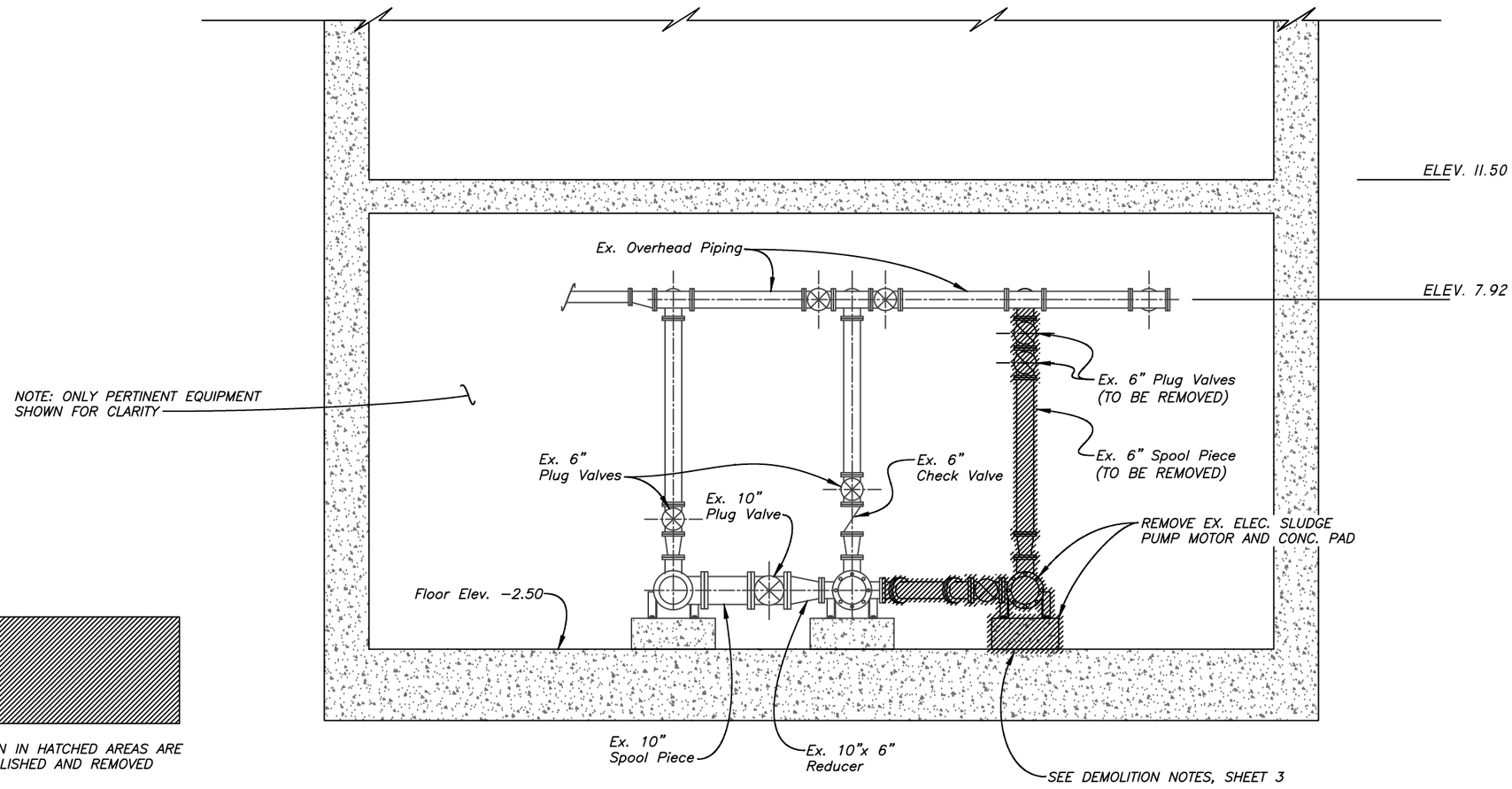

ITEMS SHOWN IN HATCHED AREAS ARE
TO BE DEMOLISHED AND REMOVED

MIXED SLUDGE PUMPING STATION
DEMOLITION PLAN - SECTION A-A

SCALE: 1/4" = 1'-0"

NOTE:

SEE ELECTRICAL SHEETS FOR
ELECTRICAL DEMOLITION PLANS.

User: ss1f Drawing Name: K:\WW_Projects\2013\2013_5983_Mixed Sludge PS Rehab\Dwg\5983-Sheet-05&08.dwg
Layout- Sep 02, 2014 - 3:29pm CTB - MONOCHROME.CTB

	No.	DATE	REVISIONS
JACINTO CARLOS FERRAS, P.E. #49454 DESIGN DIVISION HEAD WASTEWATER DEPARTMENT	3		
	2		
	1		

DES: D.R.
DRN:
CKD:
DATE:

CITY of TAMPA
WASTEWATER DEPARTMENT

HOWARD F. CURREN A.W.T.P.
MIXED SLUDGE PUMPING STATION PUMP REPLACEMENT
DEMOLITION PLAN - SECTION A-A

W.O. 5983
SHEET 5 OF 28

TPB014-006

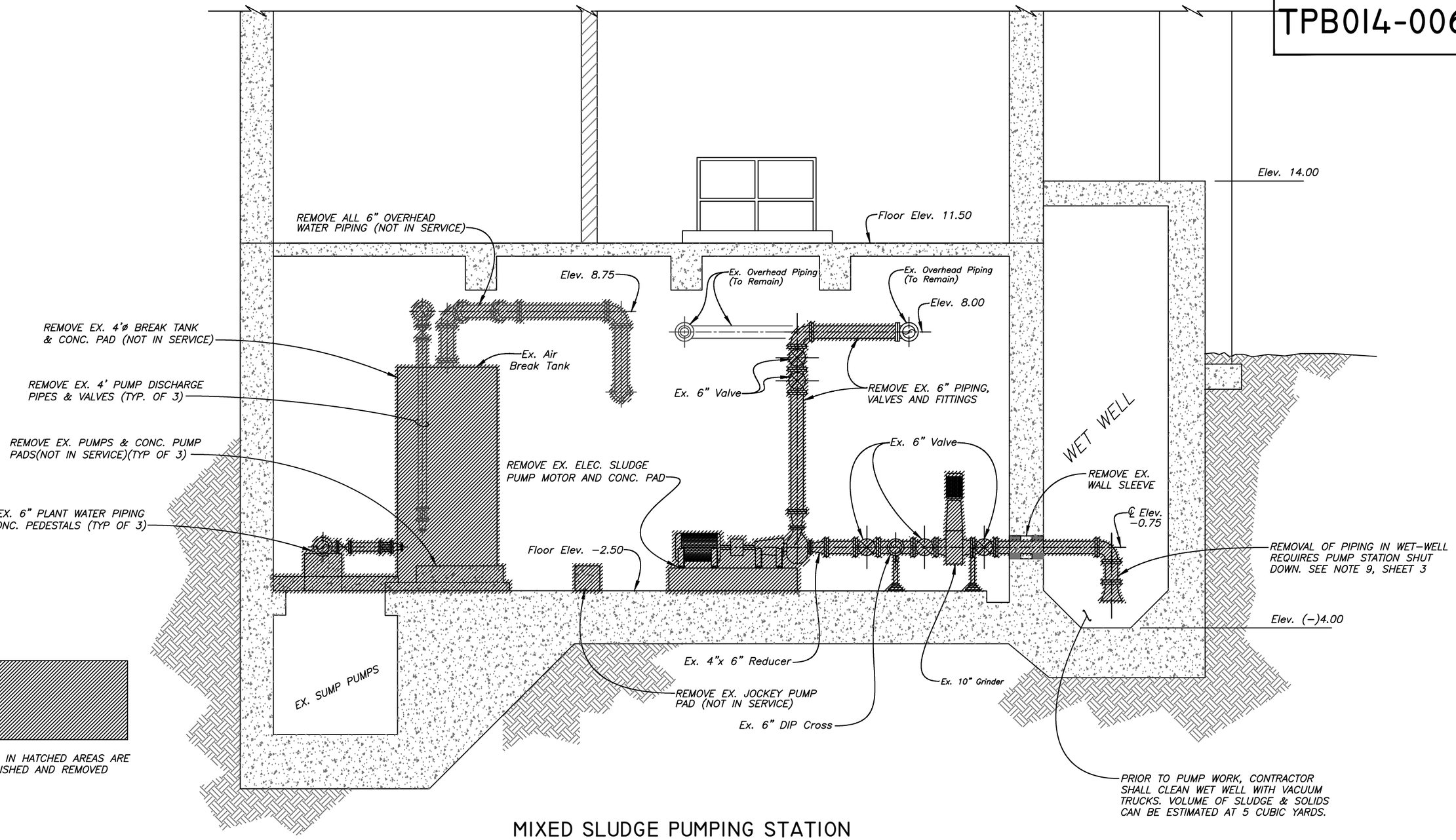

ITEMS SHOWN IN HATCHED AREAS ARE TO BE DEMOLISHED AND REMOVED

NOTE:

SEE ELECTRICAL SHEETS FOR ELECTRICAL DEMOLITION PLANS.

MIXED SLUDGE PUMPING STATION
DEMOLITION PLAN - SECTION B-B

SCALE: 1/4" = 1'-0"

User: ss1f Drawing Name: K:\WW_Projects\2013\2013_5983_Mixed Sludge PS Rehab\Dwg\5983-Sheet-06&09.dwg
Layout- Sep 10, 2014 - 12:41pmCTB - MONOCHROME.CTB

	No.	DATE	REVISIONS				
JACINTO CARLOS FERRAS, P.E. #49454 DESIGN DIVISION HEAD WASTEWATER DEPARTMENT	3			DES: D.R. DRN: CKD: DATE:	CITY of TAMPA WASTEWATER DEPARTMENT	HOWARD F. CURREN A.W.T.P. MIXED SLUDGE PUMPING STATION PUMP REPLACEMENT DEMOLITION PLAN - SECTION B-B	W.O. 5983 SHEET 6 OF 28
	2						
	1						

TPB014-007

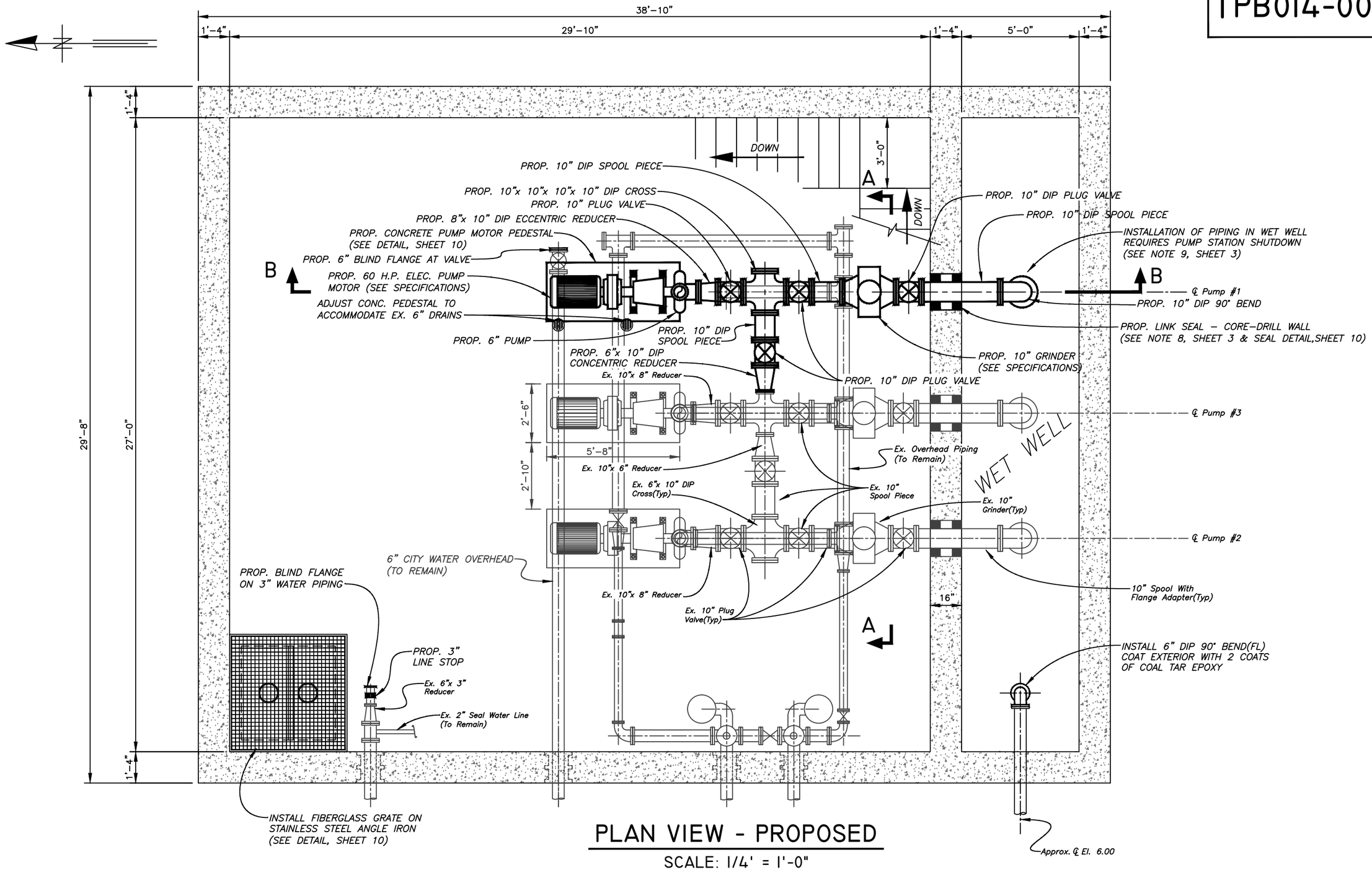

PLAN VIEW - PROPOSED

SCALE: 1/4' = 1'-0"

User: ss11 Drawing Name: K:\WW_Projects\2013\2013_5983_Mixed Sludge PS Rehab\Dwg\5983-Sheet-04&07.dwg
Layout- Sep 04, 2014 - 3:24pm CTB - MONOCHROME.CTB

	No.	DATE	REVISIONS
	3		
	2		
	1		

JACINTO CARLOS FERRAS, P.E. #49454
DESIGN DIVISION HEAD
WASTEWATER DEPARTMENT

DES: D.R.
DRN: BB
CKD:
DATE:

CITY of TAMPA
WASTEWATER DEPARTMENT

HOWARD F. CURREN A.W.T.P.
MIXED SLUDGE PUMPING STATION PUMP REPLACEMENT
PROPOSED PLAN - PLAN VIEW

W.O. 5983
SHEET 7 OF 28

TPB014-008

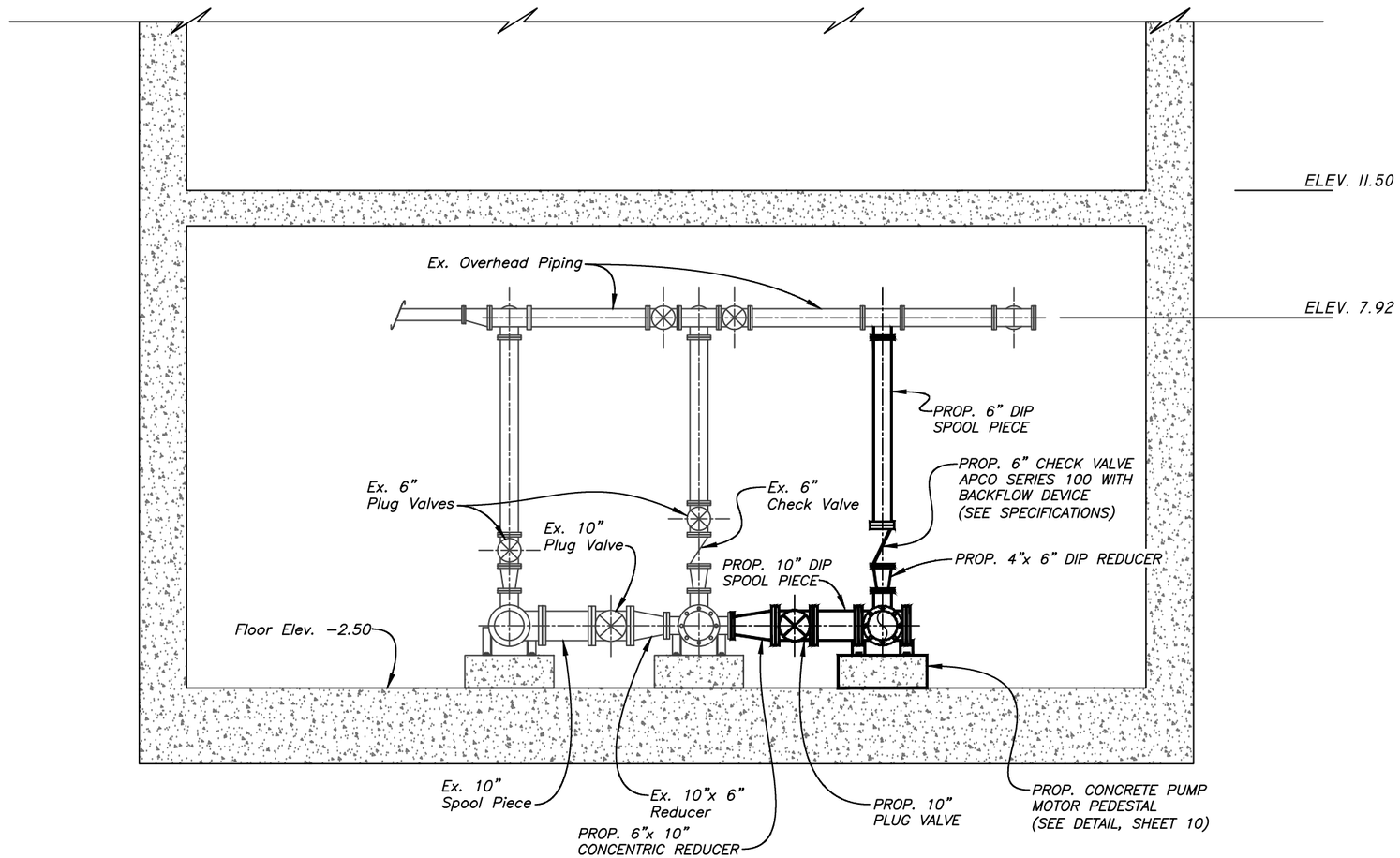

MIXED SLUDGE PUMPING STATION
PROPOSED PLAN - SECTION A-A

SCALE: 1/4" = 1'-0"

User: ss11 Drawing Name: K:\WW_Projects\2013\2013_5983_Mixed Sludge PS Rehab\Dwg\5983-ExSectionAA.dwg
Layout- Sep 02, 2014 - 3:29pm CTB - MONOCHROME.CTB

	No.	DATE	REVISIONS
JACINTO CARLOS FERRAS, P.E. #49454 DESIGN DIVISION HEAD WASTEWATER DEPARTMENT	3		
	2		
	1		

DES: D.R.
DRN:
CKD:
DATE:

CITY of TAMPA
WASTEWATER DEPARTMENT

HOWARD F. CURREN A.W.T.P.
MIXED SLUDGE PUMPING STATION PUMP REPLACEMENT
PROPOSED PLAN - SECTION A-A

W.O. 5983
SHEET 8 OF 28

TPB014-009

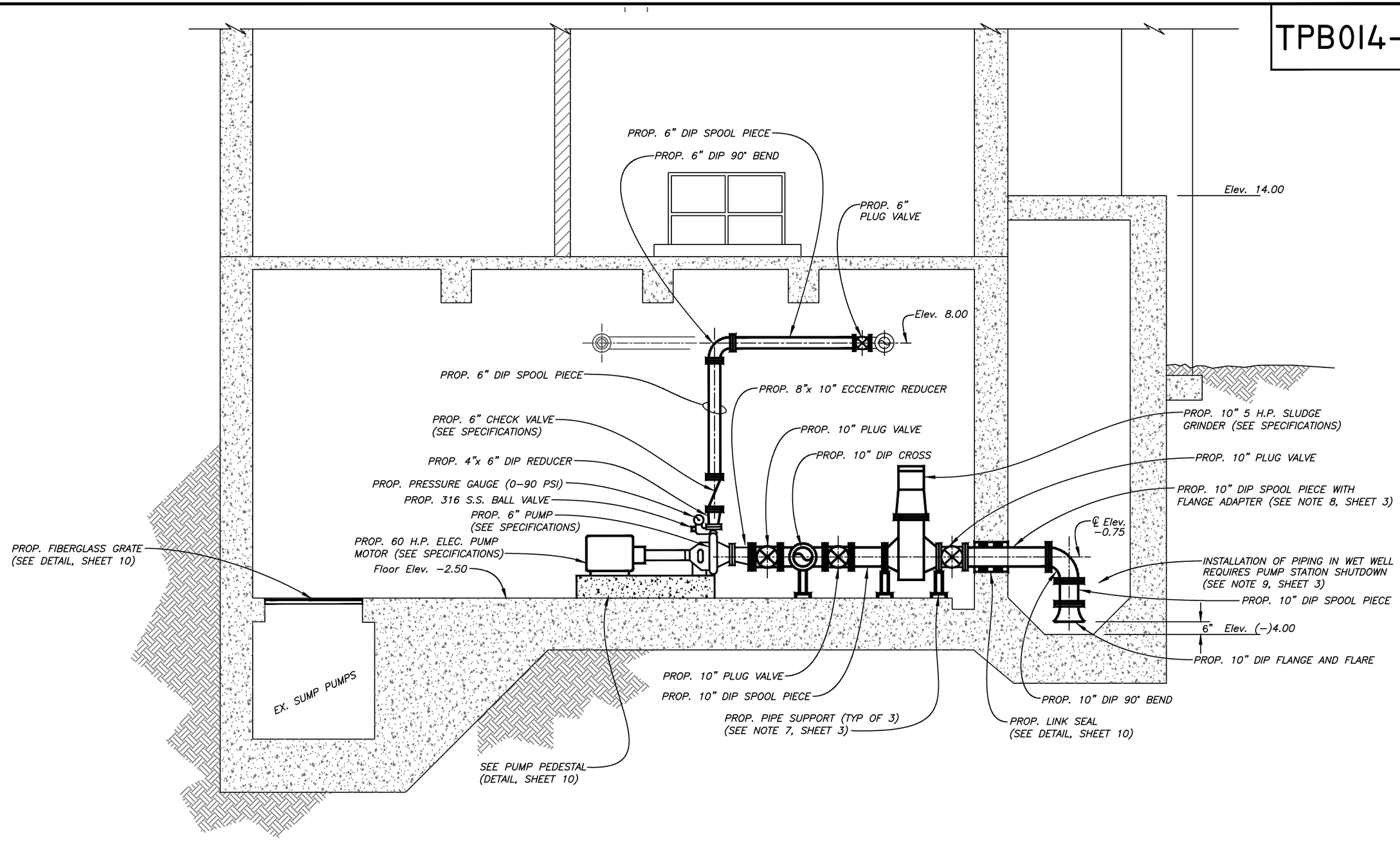

MIXED SLUDGE PUMPING STATION
PROPOSED PLAN - SECTION B-B

SCALE: 1/4" = 1'–0"

No.	DATE	REVISIONS
3		
2		
1		

JACINTO CARLOS FERRAS, P.E. #49454
DESIGN DIVISION HEAD
WASTEWATER DEPARTMENT

DES: D.R.
DRN:
CKD:
DATE:

CITY of TAMPA
WASTEWATER DEPARTMENT

HOWARD F. CURREN A.W.T.P.
MIXED SLUDGE PUMPING STATION PUMP REPLACEMENT
PROPOSED PLAN - SECTION B-B

W.O. 5983
SHEET 9 OF 28

User: ss1f Drawing Name: K:\WW_Projects\2013\2013_5983_Mixed Sludge PS Rehab\Dwg\5983-Sheet-06&09.dwg
Layout- Sep 10, 2014 - 12:41pmCTB - MONOCHROME.CTB

TPB014-010

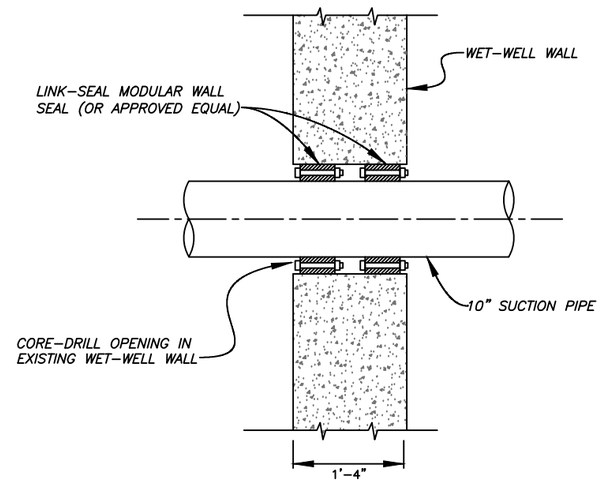

LINK SEAL DETAIL

NOT TO SCALE

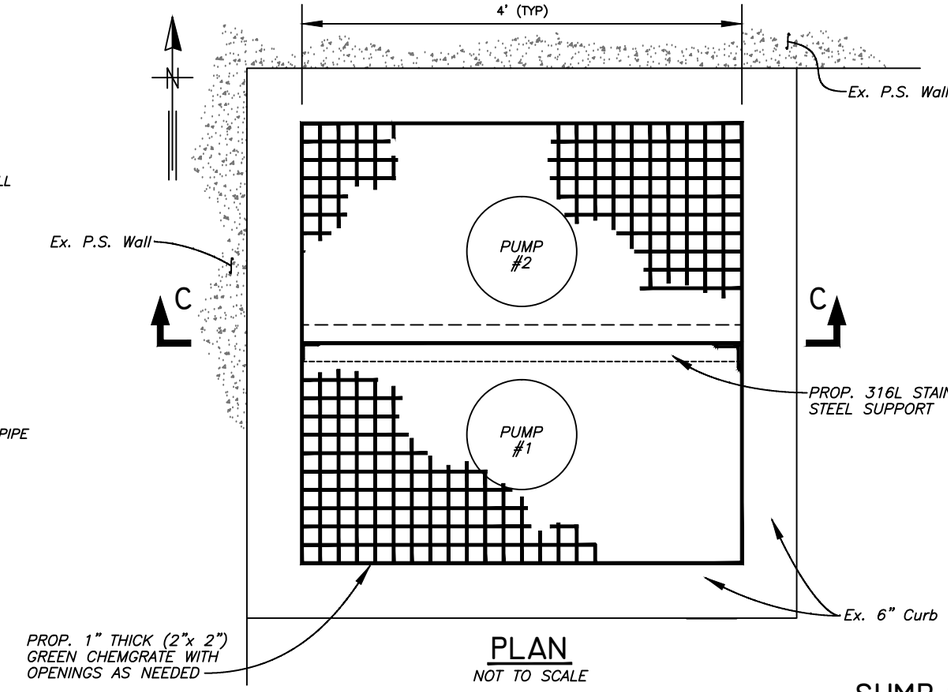

PLAN

NOT TO SCALE

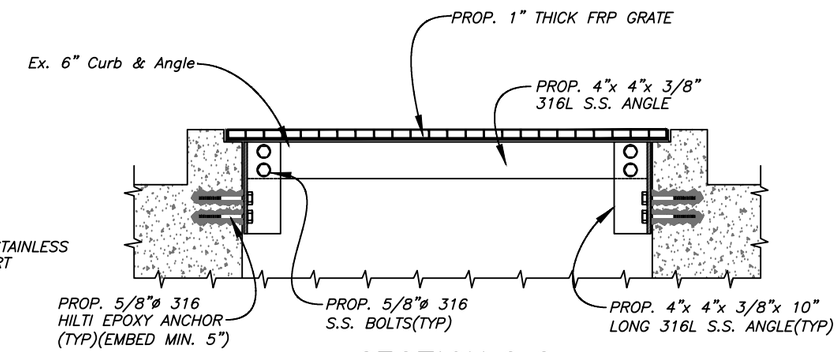

SECTION C-C

NOT TO SCALE

NOTE:

CONTRACTOR TO PROVIDE ADDITIONAL SUPPORTS AS NEEDED AROUND GRATE OPENINGS

SUMP COVER

NOT TO SCALE

NOTES

1. ALL PIPE, VALVES AND FITTINGS SHALL BE ½" DIAMETER.
2. SEAL WATER PIPING SHALL BE 316 STAINLESS STEEL TUBING OR 316 STAINLESS STEEL BRAIDED HOSE, AS NECESSARY.
3. ALL BALL VALVES ARE TO BE 316 STAINLESS STEEL, FULL PORT BALL VALVES.

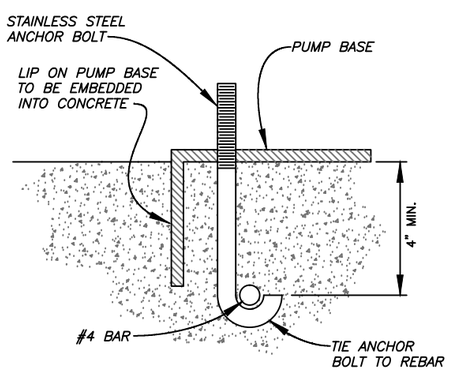

ANCHOR BOLT DETAIL

NOT TO SCALE

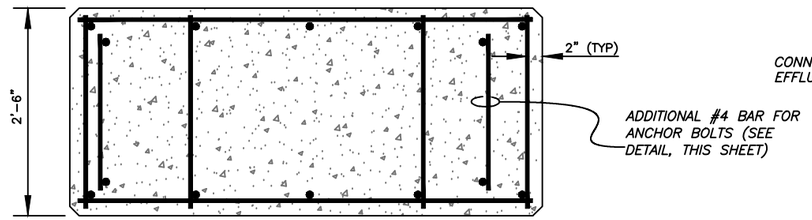

SECTION PLAN

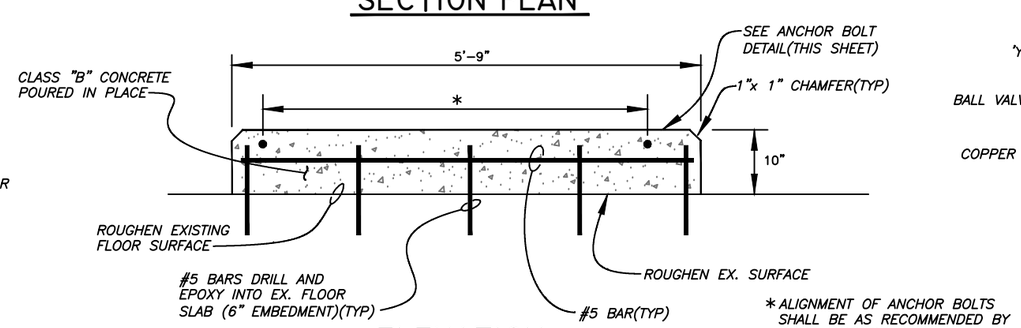

ELEVATION

PUMP PEDESTAL REINFORCEMENT DETAIL

NOT TO SCALE

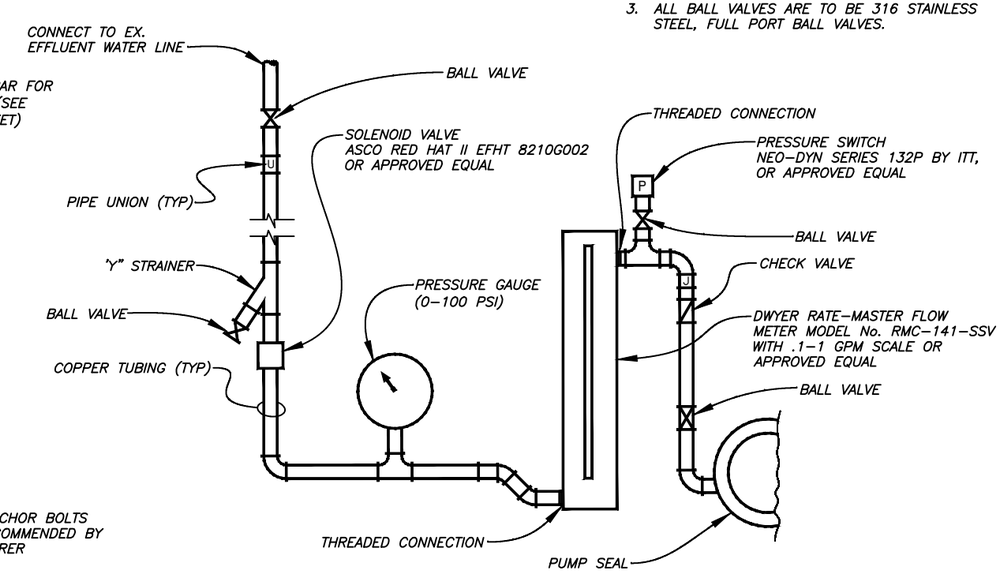

SEAL WATER DETAIL

NOT TO SCALE

User: ss1f Drawing Name: K:\WW_Projects\2013\2013_5983_Mixed Sludge PS Rehab\Dwg\5983-Sheet-10.dwg
Layout- Sep 10, 2014 - 12:41pmCTB - MONOCHROME.CTB

	No.	DATE	REVISIONS
	3		
JACINTO CARLOS FERRAS, P.E. #49454 DESIGN DIVISION HEAD WASTEWATER DEPARTMENT	2		
	1		

DES: D.R.
DRN: BB
CKD:
DATE:

CITY of TAMPA
WASTEWATER DEPARTMENT

HOWARD F. CURREN A.W.T.P.
MIXED SLUDGE PUMPING STATION PUMP REPLACEMENT DETAILS

W.O. 5983
SHEET 10 OF 28

TPB014-011

SCOPE OF WORK:

THE SCOPE OF WORK UNDER THIS DIVISION CONSISTS OF FURNISHING ALL LABOR, MATERIALS, EQUIPMENT AND TRANSPORTATION, AND PERFORMING ALL OPERATIONS REQUIRED TO SUPPORT THE INSTALLATION AND COMMISSIONING OF THE ELECTRICAL PORTION OF THE PROPOSED MIXED SLUDGE PUMPING STATION REHABILITATION INCLUDING, BUT NOT LIMITED TO, THE FOLLOWING:

A. SUBMIT WORKING DRAWINGS, PARTS SCHEDULES, AND CUT–SHEETS TO THE ENGINEER FOR APPROVAL PRIOR TO BEGINNING WORK.

B. FURNISH AND INSTALL ALL ELECTRICAL EQUIPMENT, CONTROLS, AND INSTRUMENTATION AS SHOWN ON THE PLANS AND DESCRIBED IN THE SPECIFICATIONS. THIS INSTALLATION INCLUDES:

1. DISCONNECT AND REMOVE / MODIFY THE ELECTRICAL EQUIPMENT ASSOCIATED WITH THE EXISTING SLUDGE PUMP NO.1 AND GRINDER NO.1. PORTIONS OF THE EXISTING CONDUIT, CONDUCTOR, AND ANCILLARY SYSTEMS MAY BE REUSED IF THEY ARE FOUND IN GOOD CONDITION, AND THEY DO NOT INTERFERE WITH OTHER ASPECTS OF THE PROPOSED MECHANIZATION. REMOVE ALL LOCALLY MOUNTED CONTROL EQUIPMENT INCLUDING CONTROLLERS, PUSHBUTTONS, SOLENOIDS, LIMIT SWITCHES, ETCETERA, ASSOCIATED WITH THE EXISTING SLUDGE PUMP NO.1 AND GRINDER NO.1.

2. FURNISH AND INSTALL IN THE BASEMENT: SLUDGE PUMP NO.1 MOTOR, PUSHBUTTON STATION, SEAL WATER SOLENOID, AND SEAL WATER PRESSURE SWITCH, AS SHOWN ON THE PLANS AND DESCRIBED IN THE SPECIFICATIONS.

3. FURNISH AND INSTALL IN THE BASEMENT: GRINDER NO.1 MOTOR, DISCONNECT SWITCH, AND NEMA 4X S/S CONTROLLER, AS SHOWN ON THE PLANS AND DESCRIBED IN THE SPECIFICATIONS.

4. FURNISH AND INSTALL ALL NECESSARY RIGID ALUMINUM CONDUITS, CONDUCTORS AND GROUNDING AS SHOWN ON THE PLANS AND DESCRIBED IN THE SPECIFICATIONS.

5. MODIFY THE EXISTING MOTOR CONTROL CENTERS, MCC–40 AND MCC–41, AS SHOWN ON THE PLANS AND DESCRIBED IN THE SPECIFICATIONS.

6. MODIFY THE EXISTING INSTRUMENTATION AND CONTROL PANEL, AS SHOWN ON THE PLANS AND DESCRIBED IN THE SPECIFICATIONS.

7. SUPPLY, AND PULL THROUGH THE EXISTING CONDUITS, ANY NECESSARY CONDUCTORS TO PROVIDE SLUDGE PUMP/GRINDER NO.1 FAULT INFORMATION TO THE EXISTING SCADA RTU. FINAL RTU CONNECTIONS WILL BE MADE BY CITY FORCES.

GENERAL NOTES:

1. CONTRACTOR SHALL SUBMIT SHOP DRAWINGS FOR APPROVAL PRIOR TO PURCHASING EQUIPMENT OR COMMENCING CONSTRUCTION.

2. ALL CONDUCTORS SHALL BE STRANDED COPPER, AWG 12 MIN. w/ THWN INSULATION, UNLESS OTHERWISE NOTED.

3. ALL WIRING SHALL BE IDENTIFIED w/ NUMBERS AT ALL TERMINALS AND ON WIRING DIAGRAMS.

4. VERIFY ALL MECHANICAL EQUIPMENT SIZES AND RATINGS PRIOR TO CONNECTING.

5. FIELD VERIFY ALL EQUIPMENT LOCATIONS AND CONNECTIONS PRIOR TO COMMENCING CONSTRUCTION.

6. ALL ELECTRICAL WORK SHALL BE PERFORMED IN ACCORDANCE w/ CHAPTER 27 OF THE FLORIDA BUILDING CODE, THE NEC AND ALL APPLICABLE LOCAL ORDINANCES.

7. ALL THREADED CONNECTIONS SHALL BE COATED w/ COPPER SHIELD ANTI–SEIZE COMPOUND MANUFACTURED BY THOMAS & BETTS (T & B).

8. ALL PANELS, DISCONNECTS, SWITCHES AND EQUIPMENT COVERPLATES SHALL BE LABELED w/ NAMEPLATES. NAMEPLATES SHALL BE THREE–PLY PHENOLIC BLACK–WHITE–BLACK ENGRAVED THROUGH THE FIRST BLACK LAYER. LETTERING SHALL BE 0.5 CM (3/16") MIN. EDGE OF NAMEPLATE SHALL BE BEVELED 45 DEG.

9. ALL CONDUIT SHALL BE SUPPORTED AT MAXIMUM 5'–0" INTERVALS.

10. ALL CIRCUITS SHALL HAVE A GROUNDING CONDUCTOR ROUTED INSIDE EACH CONDUIT w/ POWER CONDUCTORS.

11. ALL CONDUCTOR LENGTHS SHALL BE CONTINUOUS. NO SPLICES OR CONDUCTOR TERMINATIONS SHALL BE PERMITTED UNLESS SPECIFICALLY DESIGNATED IN THE DRAWINGS.

12. NEATLY COIL ALL SPARE CONDUCTORS & TAPE w/ VINYL ELECTRICAL TAPE (SCOTCH 33+). U.O.N.

13. PROVIDE A MINIMUM OF 3'–0" CLEARANCE IN FRONT OF ALL ELECTRICAL EQUIPMENT IN ACCORDANCE w/ ARTICLE 110 OF THE NEC.

14. ALL INSTALLATIONS SHALL BE IN ACCORDANCE w/ CITY OF TAMPA CODE, CHAPTER 5.

15. ALL FASTENING HARDWARE (SCREWS, BOLTS, NUTS, ETC.) SHALL BE 316 STAINLESS STEEL. FASTENING HARDWARE CONSTRUCTED OF FERROUS MATERIAL ARE NOT ACCEPTABLE.

16. ALL CONDUITS SHALL BE RIGID HEAVY WALL ALUMINUM CONDUIT.

17. A 316 STAINLESS STEEL CHANNEL ERECTOR SYSTEM SHALL BE USED TO SUPPORT ALL CONDUITS, BOXES, ETC. USE 316 STAINLESS STEEL MOUNTING HARDWARE. EXISTING UNISTRUT SUPPORTS MAY BE USED WHERE PRACTICABLE.

18. THE CONTRACTOR SHALL FIELD VERIFY EXISTING CONDITIONS AND MAKE ADJUSTMENTS AS NECESSARY TO EXECUTE THE PROPOSED INSTALLATIONS.

19. ALL EXISTING INSTALLATIONS DENOTED ON THE DRAWINGS ARE FOR THE CONTRACTORS REFERENCE ONLY. ALL EXISTING INSTALLATIONS SHALL BE FIELD VERIFIED PRIOR TO SUBMITTING A BID AND PRIOR TO COMMENCING CONSTRUCTION.

LEGEND

- DISCONNECTING DEVICE
- MCP 100 300 — MOTOR CIRCUIT PROTECTOR; 100 AMPERE CONTINUOUS RATING; 300 AMPERE MAGNETC TRIP SETTING
- CVT — CONTROL POWER TRANSFORMER
- FUSE
- NORMALLY OPEN CONTACT
- NORMALLY CLOSED CONTACT
- OR TIME DELAY RELAY INSTANT TRANSFER SWITCH
- IM — MOTOR STARTER COIL
- MOL — MOTOR THERMAL OVERLOAD
- R — PILOT LIGHT (RED LENS)
- TERMINAL STRIP
- ETM — HOUR METER
- STOP/L — STOP PUSHBUTTON WITH PROVISIONS FOR PADLOCK
- 1 OFF 3 — 3 POSITION SELECTION SWITCH
- LS1 — LIMIT SMITCH, NORMALLY OPEN
- LS3 — LIMIT SWITCH, NORMALLY CLOSED
- PSI — PRESSURE SWITCH, NORMALLY CLOSED
- 30 — 3 PHASE MOTOR, 30 H.P.
- MOUNTED NEAR EQUIPMENT OR MOTOR (LOCAL)
- NEUTRAL
- N.O. PUSHBUTTON
- N.C. PUSHBUTTON
- TR — NORMALLY OPEN "ON DELAY" TIMING RELAY
- TR — NORMALLY OPEN "ON DELAY" TIMING RELAY
- TR — INSTANT CLOSE – DELAY OPEN TIMING RELAY (OFF DELAY)
- TR — INSTANT OPEN – DELAY CLOSE TIMING RELAY (OFF DELAY)
- CR — CONTROL RELAY COIL
- TR — TIME DELAY RELAY COIL
- SV — SOLENOID VALVE
- 3FVNR — NEMA SIZE 3 FULL VOLTAGE, NON–REVERSING MOTOR STARTER
- CB 15 — THERMAL MAGNETIC CIRCUIT BREAKER 15 AMP
- H O A — HAND–OFF–AUTO SWITCH
- L — LOCKABLE STOP PUSH BUTTON
- SOLENOID VALVE
- J — JUNCTION BOX
- 3 — 3 H.P. MOTOR; LIQUID TIGHT FLEX CONDUIT
- SAFETY SWITCH
- 1 — MOUNTED ON INSTRUMENTATION – CONTROL PANEL
- SSRV — SOLID STATE REDUCED VOLTAGE MOTOR STARTER

TRICON CONSULTING ENGINEERS
777 S. Harbour Island Blvd.
Suite 870
Tampa, FL 33602
813.227.9190
Certificate of Authorization No. 8363

TIMOTHY THOMAS, P.E. #47079

No.	DATE	REVISIONS
3		
2		
1		

DES: T.DT.
DRN: E.A.K.
CKD: T.DT.
DATE: 9–9–14

CITY of TAMPA
HOWARD F. CURREN
ADVANCED WASTEWATER TREATMENT PLANT

HOWARD F. CURREN A.W.T.P.
MIXED SLUDGE PUMPING STATION REHABILITATION
SCOPE, NOTES AND LEGEND

W.O. 5983
SHEET
EI

TPB014-012

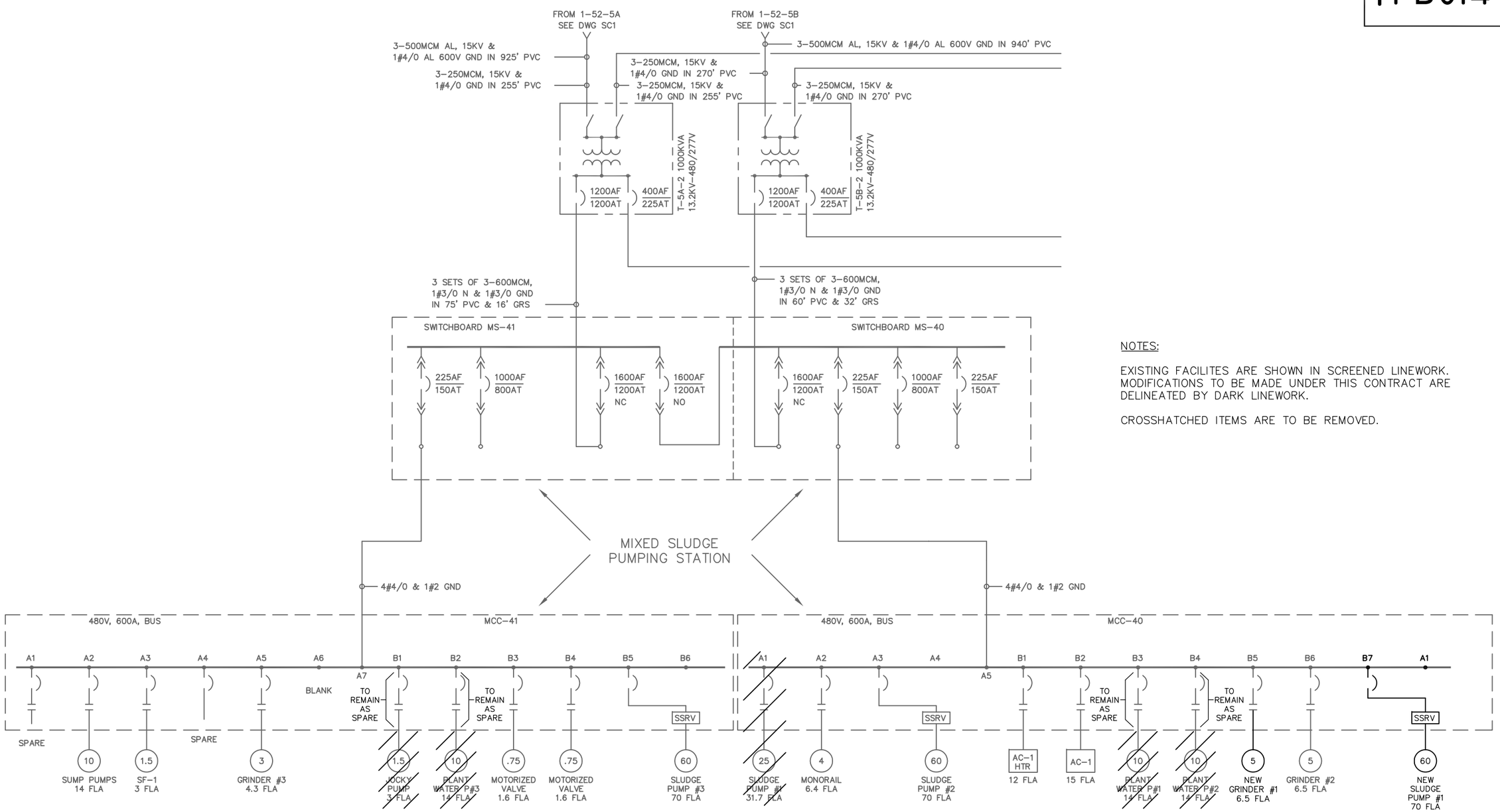

NOTES:

EXISTING FACILITES ARE SHOWN IN SCREENED LINEWORK. MODIFICATIONS TO BE MADE UNDER THIS CONTRACT ARE DELINEATED BY DARK LINEWORK.

CROSSHATCHED ITEMS ARE TO BE REMOVED.

TRICON CONSULTING ENGINEERS
777 S. Harbour Island Blvd,
Suite 670
Tampa, FL 33602
813.227.9190
Certificate of Authortzation No. 8363

No.	DATE	REVISIONS
3		
2		
1		

TIMOTHY THOMAS, P.E. #47079

DES: T.DT.
DRN: E.A.K.
CKD: T.DT.
DATE: 9-9-14

CITY of TAMPA
HOWARD F. CURREN
ADVANCED WASTEWATER TREATMENT PLANT

HOWARD F. CURREN A.W.T.P.
MIXED SLUDGE PUMPING STATION REHABILITATION
PROPOSED OVERALL ONE-LINE DIAGRAM

W.O. 5983
SHEET
E2

TPB014-013

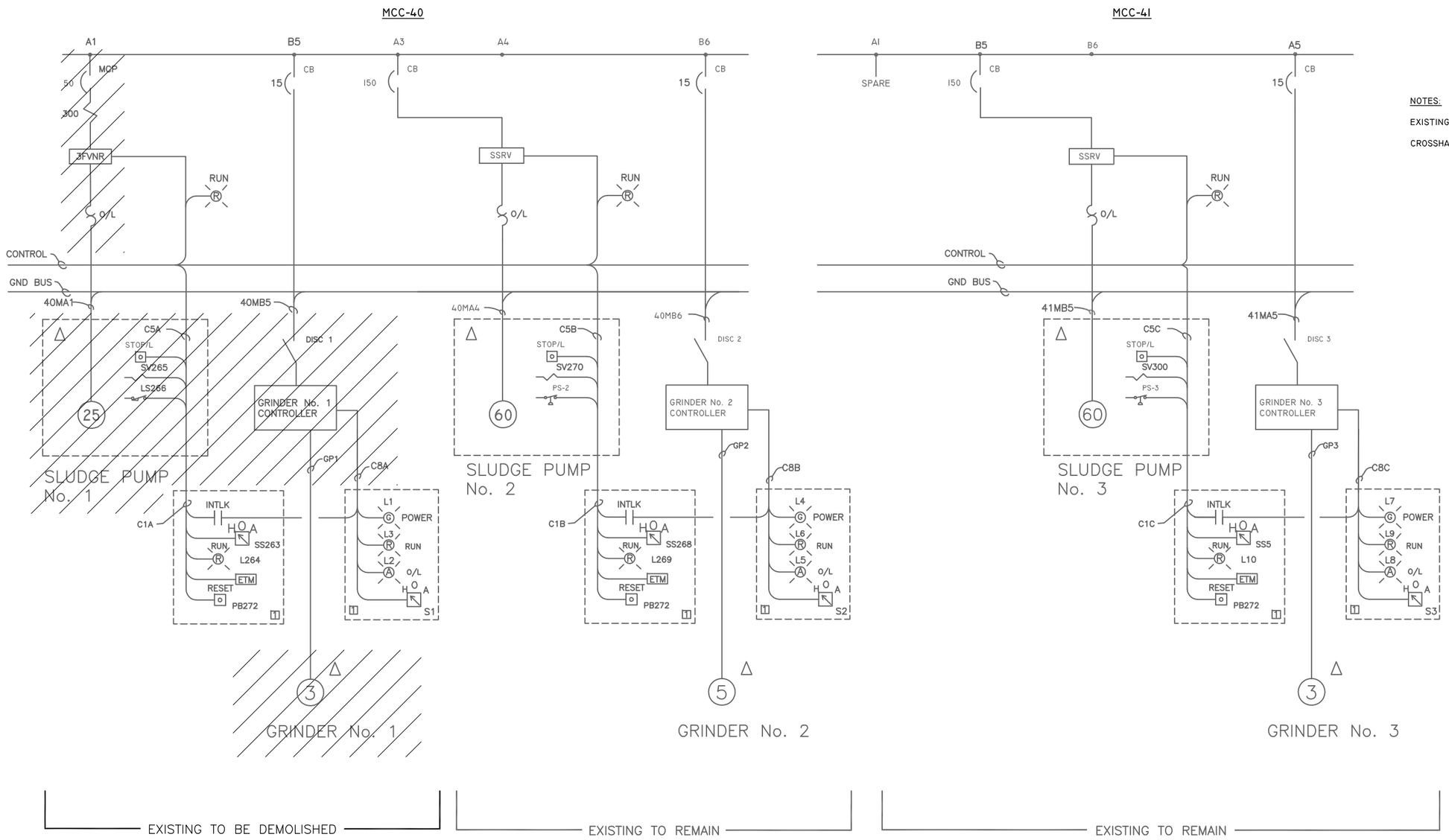

NOTES:

EXISTING ITEMS SHOWN IN SCREENED LINEWORK.

CROSSHATCHED ITEMS ARE TO BE REMOVED.

SLUDGE PUMPING SYSTEM
EXISTING ONE LINE DIAGRAM

TRICON CONSULTING ENGINEERS
777 S. Harbour Island Blvd.
Suite 870
Tampa, FL 33602
813.227.9190
Certificate of Authorization No. 8363

No.	DATE	REVISIONS
3		
2		
1		

TIMOTHY THOMAS, P.E. #47079

DES: T.DT.
DRN: E.A.K.
CKD: T.DT.
DATE: 9–9–14

CITY of TAMPA
HOWARD F. CURREN
ADVANCED WASTEWATER TREATMENT PLANT

HOWARD F. CURREN A.W.T.P.
MIXED SLUDGE PUMPING STATION REHABILITATION
EX. PUMPING SYSTEM ONE-LINE DIAGRAM AND DEMO

W.O. 5983

SHEET
E3

TPB014-014

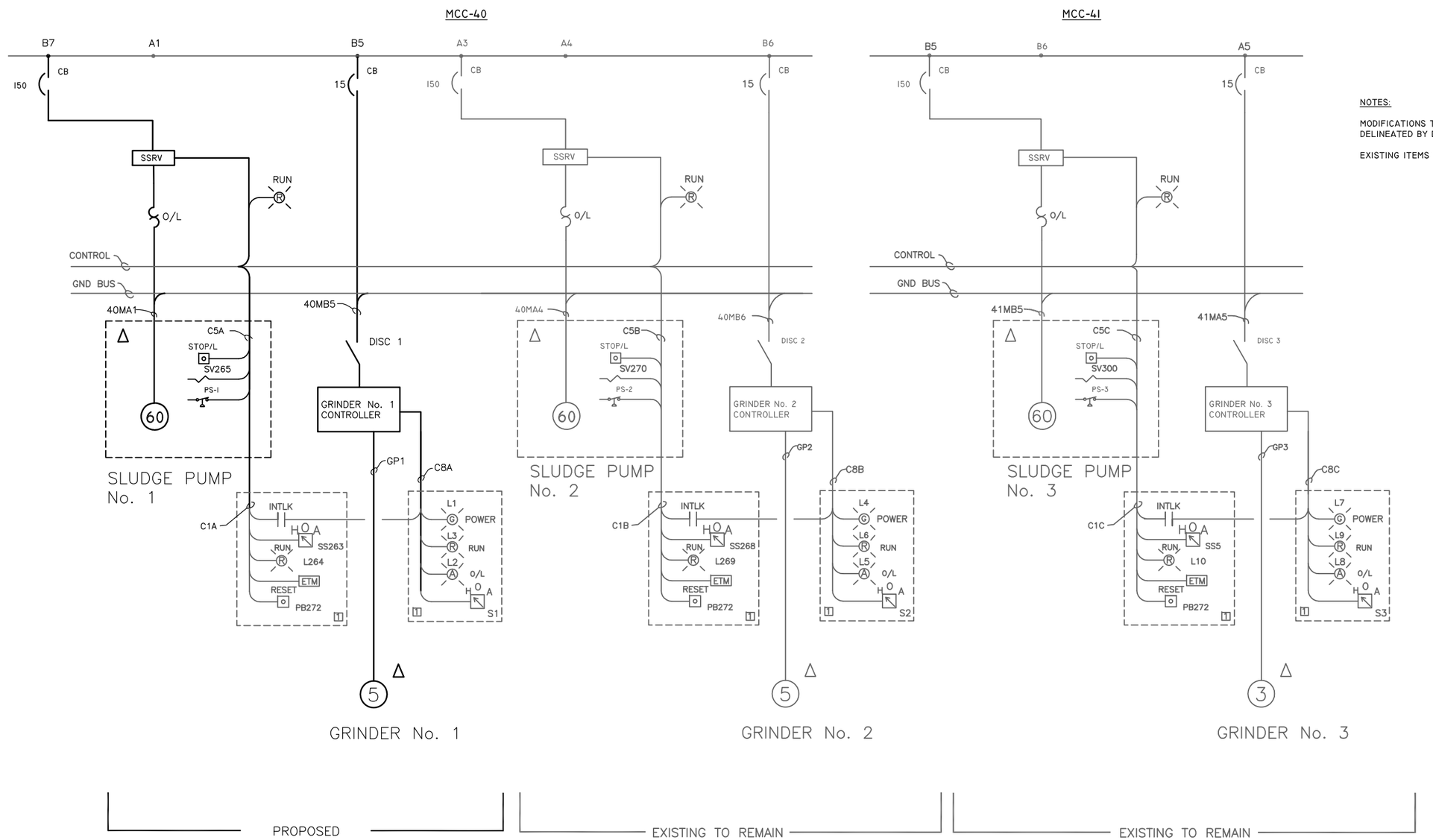

NOTES:

MODIFICATIONS TO BE MADE UNDER THIS CONTRACT ARE DELINEATED BY DARK LINEWORK.

EXISTING ITEMS TO REMAIN SHOWN IN SCREENED LINEWORK.

SLUDGE PUMPING SYSTEM
PROPOSED ONE LINE DIAGRAM

TRICON CONSULTING ENGINEERS
777 S. Harbour Island Blvd.
Suite 870
Tampa, FL 33602
813.227.9190
Certificate of Authorization No. 8363

No.	DATE	REVISIONS
3		
2		
1		

TIMOTHY THOMAS, P.E. #47079

DES: T.DT.
DRN: E.A.K.
CKD: T.DT.
DATE: 9-9-14

CITY of TAMPA
HOWARD F. CURREN
ADVANCED WASTEWATER TREATMENT PLANT

HOWARD F. CURREN A.W.T.P.
MIXED SLUDGE PUMPING STATION REHABILITATION
PROPOSED PUMPING SYSTEM ONE-LINE DIAGRAM

W.O. 5983
SHEET
E4

TPB014-015

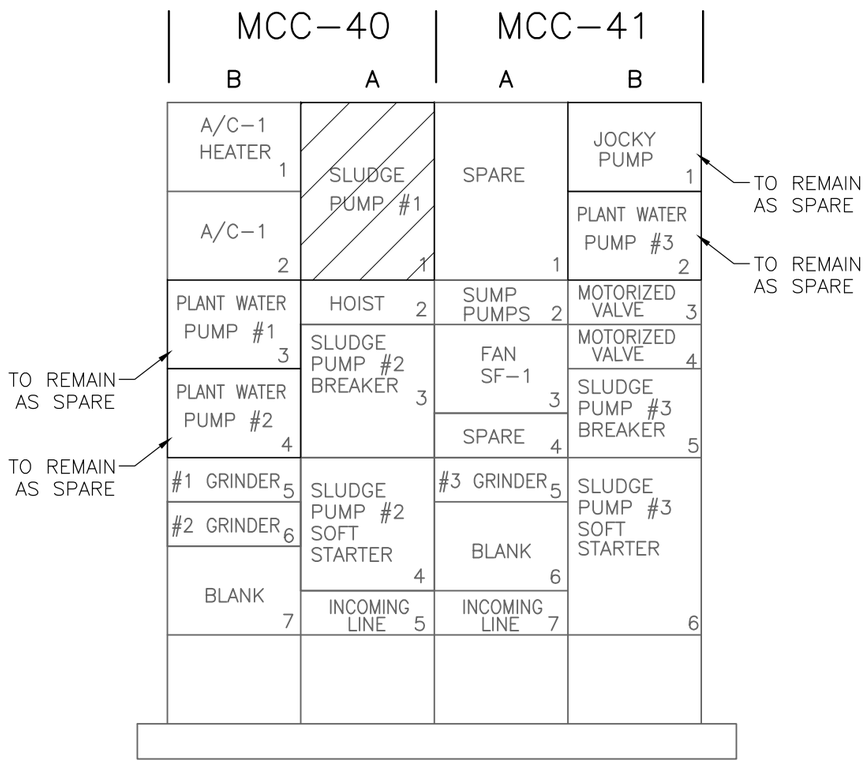

EXISTING MCC–40 AND MCC–41
FRONT ELEVATION

NOTES:

EXISTING ITEMS SHOWN IN SCREENED LINEWORK.

CROSSHATCHED ITEMS ARE TO BE REMOVED/MODIFIED.

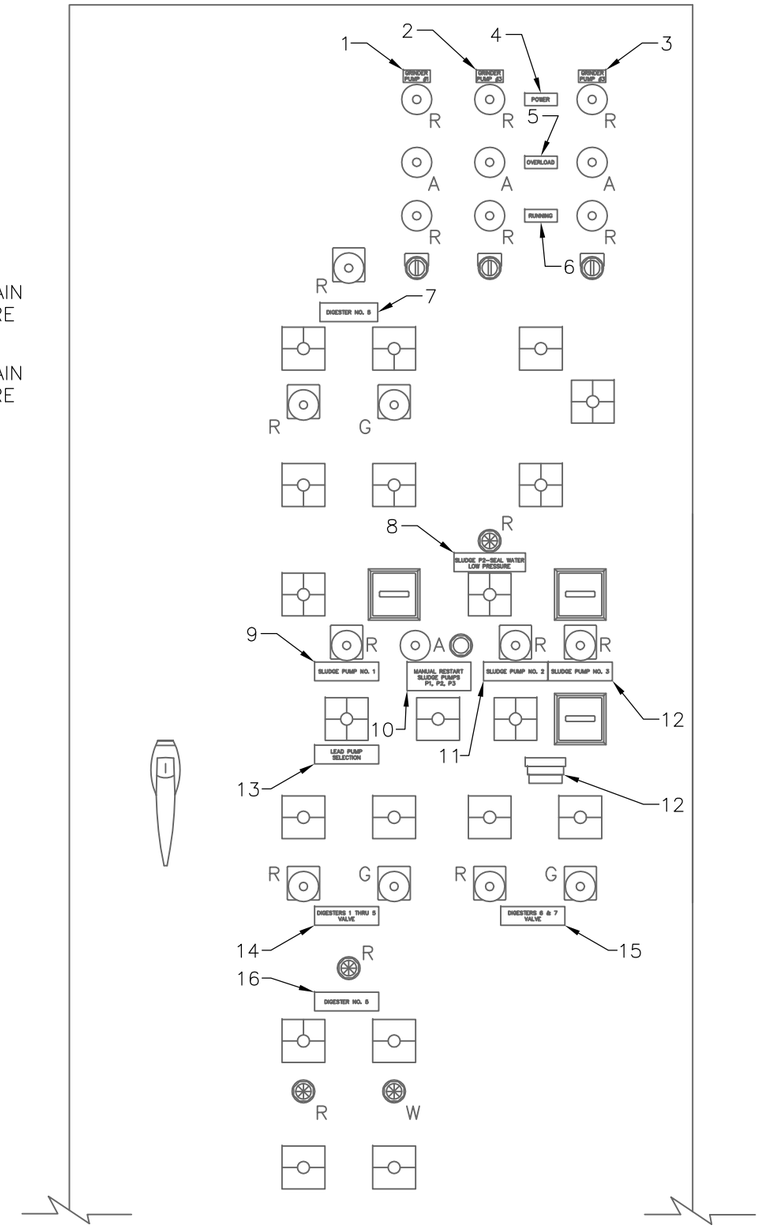

EXISTING INSTRUMENTATION
CONTROL PANEL FRONT ELEVATION

EXISTING NAME PLATE LEGEND	
ITEM	DEVICE
1	GRINDER PUMP #1
2	GRINDER PUMP #2
3	GRINDER PUMP #3
4	POWER
5	OVERLOAD
6	RUNNING
7	DIGESTER No. 5
8	SLUDGE P2–SEAL WATER LOW PRESSURE
9	SLUDGE PUMP No. 1
10	MANUAL RESTART SLUDGE PUMPS P1, P2, P3
11	SLUDGE PUMP No. 2
12	SLUDGE PUMP No. 3
13	LEAD PUMP SELECTION
14	DIGESTERS 1 THRU 5 VALVE
15	DIGESTERS 6 & 7 VALVE
16	DIGESTER No. 8

TRICON CONSULTING ENGINEERS
777 S. Harbour Island Blvd.
Suite 870
Tampa, FL 33602
813.227.9190
Certificate of Authorization No. 8363

TIMOTHY THOMAS, P.E. #47079

No.	DATE	REVISIONS
3		
2		
1		

DES: T.DT.
DRN: E.A.K.
CKD: T.DT.
DATE: 9–9–14

CITY of TAMPA
HOWARD F. CURREN
ADVANCED WASTEWATER TREATMENT PLANT

HOWARD F. CURREN A.W.T.P.
MIXED SLUDGE PUMPING STATION REHABILITATION
EX. MCC & INSTRUMENTATION PANEL ELEVATION

W.O. 5983
SHEET
E5

TPB014-016

MCC – 40

TYPE: GE, MODEL 8000 LINE
VOLT: 480V, 3PH, 4W
MTG: FREE STANDING – FRONT ACC.

MAINS – 225A – FULL NEU
CONN. LOAD = 146KVA

CKT No.	DESIGNATION	HP	KVA	V	PH	FRAME SIZE	TRIP RANGE	STARTER	WIRE	COND	REMARKS
A–1	SLUDGE PUMP #1	25	27	480	3	100	330/1200	3FVNR	3–#4, 1#8	1–1/2	
A–2	HOIST	4	5.3			100	18/58	–	4–#10	3/4	
A–3	SLUDGE PUMP #2	60	61.3			150	450/2000				72 AMP SOLID STATE REDUCED VOLTAGE MOTOR STARTER
A–4								72 RVNR	4–#3, 1–#8	1–1/2	
A–5	INCOMING LINE	–	–				–	–	–	–	
B–1	AC–1 HEATER	–	10			100	30	1FVNR	4–#10	3/4	
B–2	AC–1	–	12				20	1FVNR	4–#12	3/4	
B–3	PLANT WATER P#1	10	10.5				100/300	1FVNR	4–#10	3/4	
B–4	PLANT WATER P#2	10	10.5				100/300	1FVNR	4–#10	3/4	
B–5	#1 GRINDER	3	3.8				15	–	4–#12	3/4	
B–6	#2 GRINDER	5	6.0				15	–	4–#12	3/4	
B–7	BLANK	–	–				–	–	–	–	

MCC – 41

TYPE: GE, MODEL 8000 LINE
VOLT: 480V, 3PH, 4W
MTG: FREE STANDING – FRONT ACC.

MAINS – 225A – FULL NEU
CONN. LOAD = 95KVA

CKT No.	DESIGNATION	HP	KVA	V	PH	FRAME SIZE	TRIP RANGE	STARTER	WIRE	COND	REMARKS
A–1	SPARE	–	–	480	3	100	330/1200	3FVNR	–	–	
A–2	SUMP PUMPS	10	12.2				50/150	–	4–#10	3/4	
A–3	FAN SF–1	1–1/2	2.5				8/22	1FVNR	4–#12	3/4	WITH H–O–A SW.
A–4	SPARE	–	–				15	–	–	–	
A–5	#3 GRINDER	3	3.8				15	–	4–#12	3/4	
A–6	BLANK	–	–				–	–	–	–	
A–7	INCOMING LINE	–	–				–	–	–	–	
B–1	JOCKEY PUMP	1–1/2	2.5				18/58	1FVNR	4–#12	3/4	
B–2	PLANT WATER P#3	10	10.5				100/300	1FVNR	4–#10	3/4	
B–3	MOTORIZED VALVE	3/4	1.05				20	–	4–#12	3/4	
B–4	MOTORIZED VALVE	3/4	1.05				20	–	4–#12	3/4	
B–5	SLUDGE PUMP #3	60	61.3			150	450/2000				72 AMP SOLID STATE REDUCED VOLTAGE MOTOR STARTER
B–6								72 RVNR	4–#3, 1–#8	1–1/2	

NOTES:

CROSSHATCHED ITEMS ARE TO BE REMOVED.

EXISTING FACILITES ARE SHOWN IN SCREENED LINEWORK.

TRICON CONSULTING ENGINEERS
777 S. Harbour Island Blvd.
Suite 870
Tampa, FL 33602
813.227.9190
Certificate of Authorization No. 8363

TIMOTHY THOMAS, P.E. #47079

No.	DATE	REVISIONS
3		
2		
1		

DES: T.DT.
DRN: E.A.K.
CKD: T.DT.
DATE: 9–8–14

CITY of TAMPA
HOWARD F. CURREN
ADVANCED WASTEWATER TREATMENT PLANT

HOWARD F. CURREN A.W.T.P.
MIXED SLUDGE PUMPING STATION REHABILITATION
EXISTING MCC SCHEDULES

W.O. 5983
SHEET
E6

TPB014-017

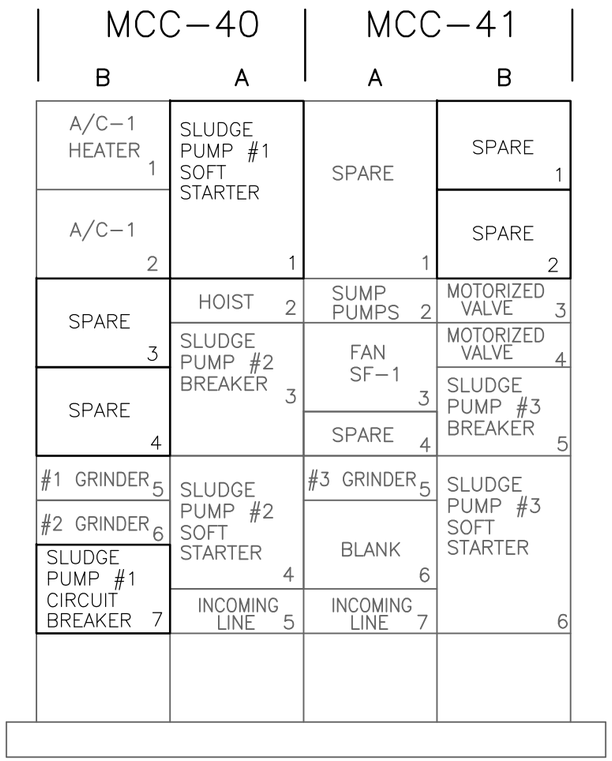

PROPOSED MODIFICATIONS TO EXISTING MCC–40 FRONT ELEVATION

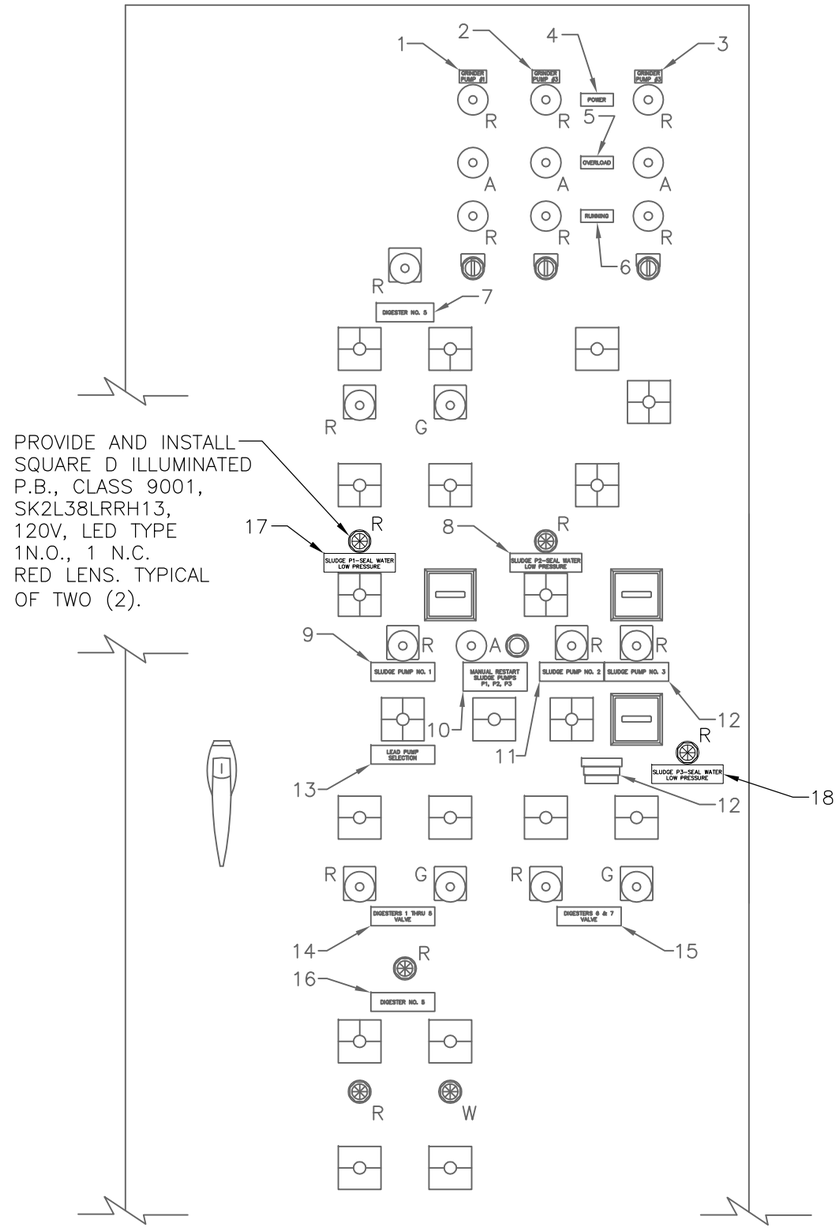

PROPOSED MODIFICATIONS TO CONTROL PANEL

REVISED NAME PLATE LEGEND	
ITEM	DEVICE
1	GRINDER PUMP #1
2	GRINDER PUMP #2
3	GRINDER PUMP #3
4	POWER
5	OVERLOAD
6	RUNNING
7	DIGESTER No. 5
8	SLUDGE P2–SEAL WATER LOW PRESSURE
9	SLUDGE PUMP No. 1
10	MANUAL RESTART SLUDGE PUMPS P1, P2, P3
11	SLUDGE PUMP No. 2
12	SLUDGE PUMP No. 3
13	LEAD PUMP SELECTION
14	DIGESTERS 1 THRU 5 VALVE
15	DIGESTERS 6 & 7 VALVE
16	DIGESTER No. 8
17	SLUDGE P1–SEAL WATER LOW PRESSURE
18	SLUDGE P3–SEAL WATER LOW PRESSURE

NOTES:

MODIFICATIONS TO BE MADE UNDER THIS CONTRACT ARE DELINEATED BY DARK LINEWORK.

EXISTING ITEMS TO REMAIN SHOWN IN SCREENED LINEWORK.

TRICON CONSULTING ENGINEERS
777 S. Harbour Island Blvd.
Suite 870
Tampa, FL 33602
813.227.9190
Certificate of Authorization No. 8363

TIMOTHY THOMAS, P.E. #47079

No.	DATE	REVISIONS
3		
2		
1		

DES: T.DT.
DRN: E.A.K.
CKD: T.DT.
DATE: 9–8–14

CITY of TAMPA
HOWARD F. CURREN
ADVANCED WASTEWATER TREATMENT PLANT

HOWARD F. CURREN A.W.T.P.
MIXED SLUDGE PUMPING STATION REHABILITATION
PROP. MCC & INSTRUMENTATION PANEL ELEVATION

W.O. 5983
SHEET E7

TPB014-018

TYPE: GE, MODEL 8000 LINE
VOLT: 480V, 3PH, 4W
MTG: FREE STANDING – FRONT ACC.

MCC – 40

MAINS – 225A – FULL NEU

CONN. LOAD = 162KVA

CKT No.	DESIGNATION	HP	KVA	V	PH	FRAME SIZE	TRIP RANGE	STARTER	WIRE	COND	REMARKS
A–1	SLUDGE PUMP #1	60	61.3	480	3			85 RVNR	4–#3, 1–#8	1-1/2	85 AMP SOLID STATE REDUCED VOLTAGE MOTOR STARTER
A–2	HOIST	4	5.3			100	18/58	–	4–#10	3/4	
A–3	SLUDGE PUMP #2	60	61.3			150	450/2000				72 AMP SOLID STATE REDUCED VOLTAGE MOTOR STARTER
A–4								72 RVNR	4–#3, 1–#8	1-1/2	
A–5	INCOMING LINE	–	–				–	–	–	–	
B–1	AC–1 HEATER	–	10			100	30	1FVNR	4–#10	3/4	
B–2	AC–1	–	12				20	1FVNR	4–#12	3/4	
B–3	SPARE	–	–				100/300	1FVNR	–	–	
B–4	SPARE	–	–				100/300	1FVNR	–	–	
B–5	#1 GRINDER	5	6.0			100	15	–	4–#12	3/4	
B–6	#2 GRINDER	5	6.0				15	–	4–#12	3/4	
B–7	SLUDGE PUMP #1	60	61.3			150	150	–	4–#3, 1–#8	–	CIRCUIT BREAKER FOR SSRV IN MCC–40 A1

TYPE: GE, MODEL 8000 LINE
VOLT: 480V, 3PH, 4W
MTG: FREE STANDING – FRONT ACC.

MCC – 41

MAINS – 225A – FULL NEU

CONN. LOAD = 82KVA

CKT No.	DESIGNATION	HP	KVA	V	PH	FRAME SIZE	TRIP RANGE	STARTER	WIRE	COND	REMARKS
A–1	SPARE	–	–	480	3	100	330/1200	3FVNR	–	–	
A–2	SUMP PUMPS	10	12.2				50/150	–	4–#10	3/4	
A–3	FAN SF–1	1-1/2	2.5				8/22	1FVNR	4–#12	3/4	WITH H–O–A SW.
A–4	SPARE	–	–				15	–	–	–	
A–5	#3 GRINDER	3	3.8				15	–	4–#12	3/4	
A–6	BLANK	–	–				–	–	–	–	
A–7	INCOMING LINE	–	–				–	–	–	–	
B–1	SPARE	–	–				18/58	1FVNR	–	–	
B–2	SPARE	–	–				100/300	1FVNR	–	–	
B–3	MOTORIZED VALVE	3/4	1.05			100	20	–	4–#12	3/4	
B–4	MOTORIZED VALVE	3/4	1.05				20	–	4–#12	3/4	
B–5	SLUDGE PUMP #3	60	61.3			150	450/2000				72 AMP SOLID STATE REDUCED VOLTAGE MOTOR STARTER
B–6								72 RVNR	4–#3, 1–#8	1-1/2	

NOTES:

MODIFICATIONS TO BE MADE UNDER THIS CONTRACT ARE DELINEATED BY DARK LINEWORK.

EXISTING ITEMS TO REMAIN SHOWN IN SCREENED LINEWORK.

THE CONTRACTOR SHALL PROVIDE AND INSTALL A NEW THERMAL-MAGNETIC CIRCUIT BREAKER TO FEED THE NEW SLUDGE PUMP (#1) SSRV. A MOTOR CIRCUIT PROTECTOR (MCP) SHALL NOT BE ALLOWED.

TRICON CONSULTING ENGINEERS
777 S. Harbour Island Blvd.
Suite 870
Tampa, FL 33602
813.227.9190
Certificate of Authorization No. 8363

TIMOTHY THOMAS, P.E. #47079

No.	DATE	REVISIONS
3		
2		
1		

DES: T.DT.
DRN: E.A.K.
CKD: T.DT.
DATE: 9–8–14

CITY of TAMPA
HOWARD F. CURREN
ADVANCED WASTEWATER TREATMENT PLANT

HOWARD F. CURREN A.W.T.P.
MIXED SLUDGE PUMPING STATION REHABILITATION
PROPOSED MCC SCHEDULE

W.O. 5983

SHEET
E8

TPB014-019

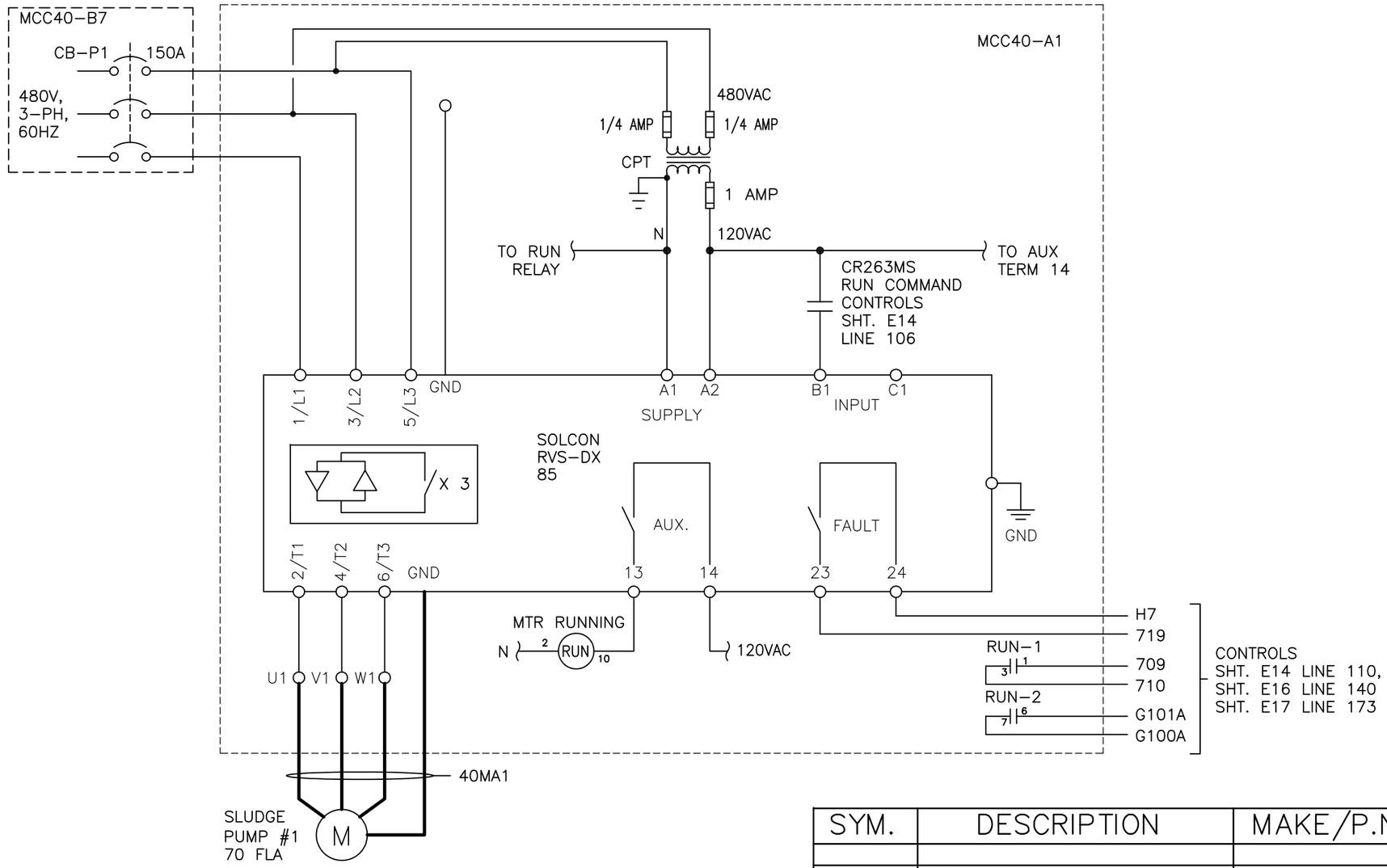

SYM.	DESCRIPTION	MAKE/P.N.	DETAILS
SSRV	SOLID STATE SOFT STARTER	SOLCON RVS-DX 85 480-115-8-S	85A, 60HP @ 460V, 1.15SF
RUN	CONTROL RELAY	POTTER & BRUMFIELD KRPA14AN120	120VAC COIL, 3PDT, 10A CONTACTS W/ INDICATOR
CPT	CONTROL POWER TRANSFORMER	SQUARE-D 9070T100D1	100VA, 480V-120V
CB-P1	FEEDER CIRCUIT BREAKER	GENERAL ELECTRIC THED136150	150A, 25KAIC @ 480V

SLUDGE PUMP #1
SCHEMATIC DIAGRAM

TRICON CONSULTING ENGINEERS
777 S. Harbour Island Blvd,
Suite 870
Tampa, FL 33602
813.227.9190
Certificate of Authorization No. 8363

No.	DATE	REVISIONS
3		
2		
1		

TIMOTHY THOMAS, P.E. #47079

DES: T.DT.
DRN: E.A.K.
CKD: T.DT.
DATE: 9-9-14

CITY of TAMPA
HOWARD F. CURREN
ADVANCED WASTEWATER TREATMENT PLANT

HOWARD F. CURREN A.W.T.P.
MIXED SLUDGE PUMPING STATION REHABILITATION
SLUDGE PUMP No.I CONTROLS

W.O. 5983

SHEET E9 OF 18

TPB014-020

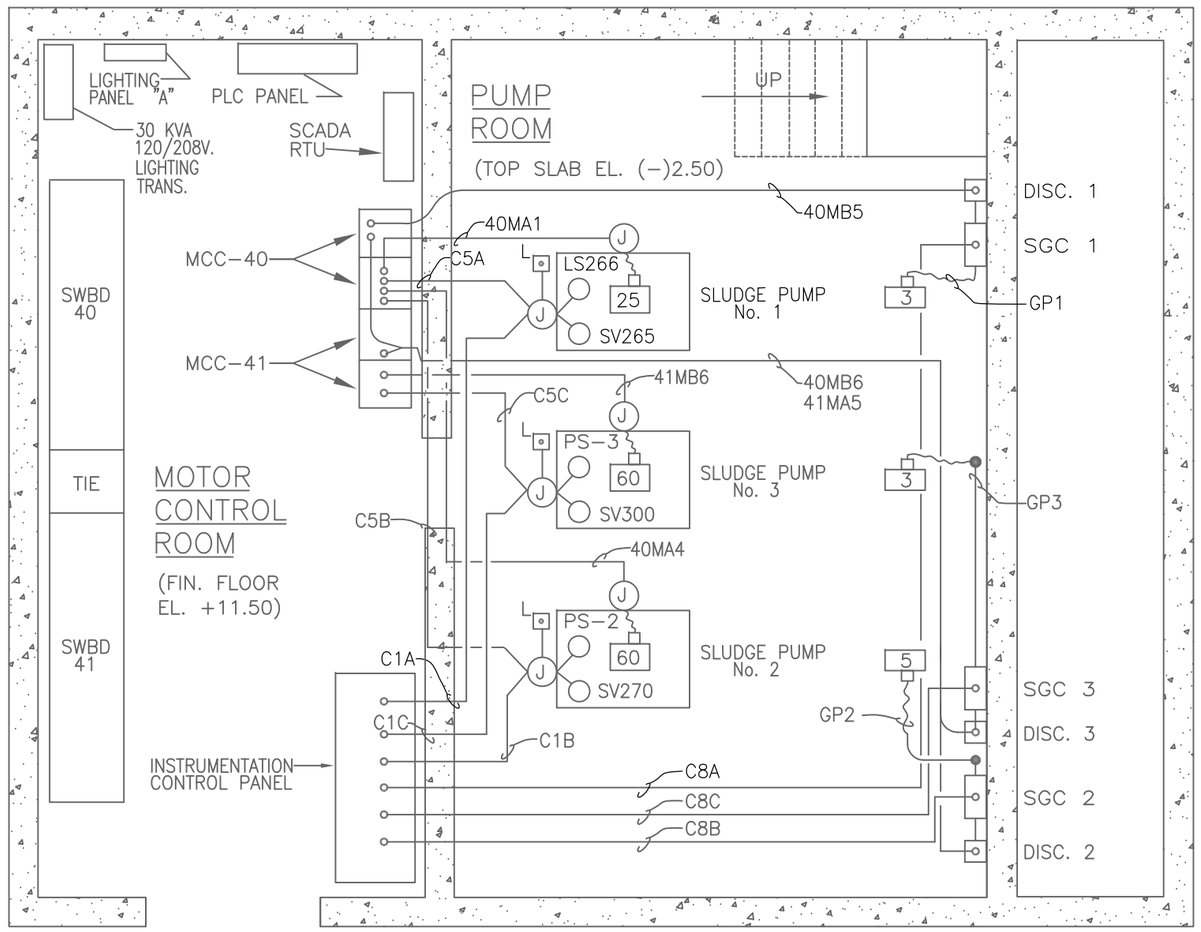

EXISTING ELECTRICAL PLAN

NOTE:

THIS DRAWING SHOWS EXISTING CONDITIONS USING THE BEST AS–BUILT INFORMATION AVAILABLE AT THE TIME OF DESIGN. IT IS PROVIDED FOR REFERENCE ONLY. THE CONTRACTOR SHALL FIELD VERIFY EXISTING FACILITIES LYING WITHIN HIS SCOPE OF WORK.

TRICON CONSULTING ENGINEERS
777 S. Harbour Island Blvd.
Suite 870
Tampa, FL 33602
813.227.9190
Certificate of Authorization No. 8363

TIMOTHY THOMAS, P.E. #47079

No.	DATE	REVISIONS
3		
2		
1		

DES: T.DT.
DRN: E.A.K.
CKD: T.DT.
DATE: 9–9–14

CITY of TAMPA
HOWARD F. CURREN
ADVANCED WASTEWATER TREATMENT PLANT

HOWARD F. CURREN A.W.T.P.
MIXED SLUDGE PUMPING STATION REHABILITATION
EXISTING ELECTRICAL PLAN

W.O. 5983
SHEET E10 OF 18

TPB014-021

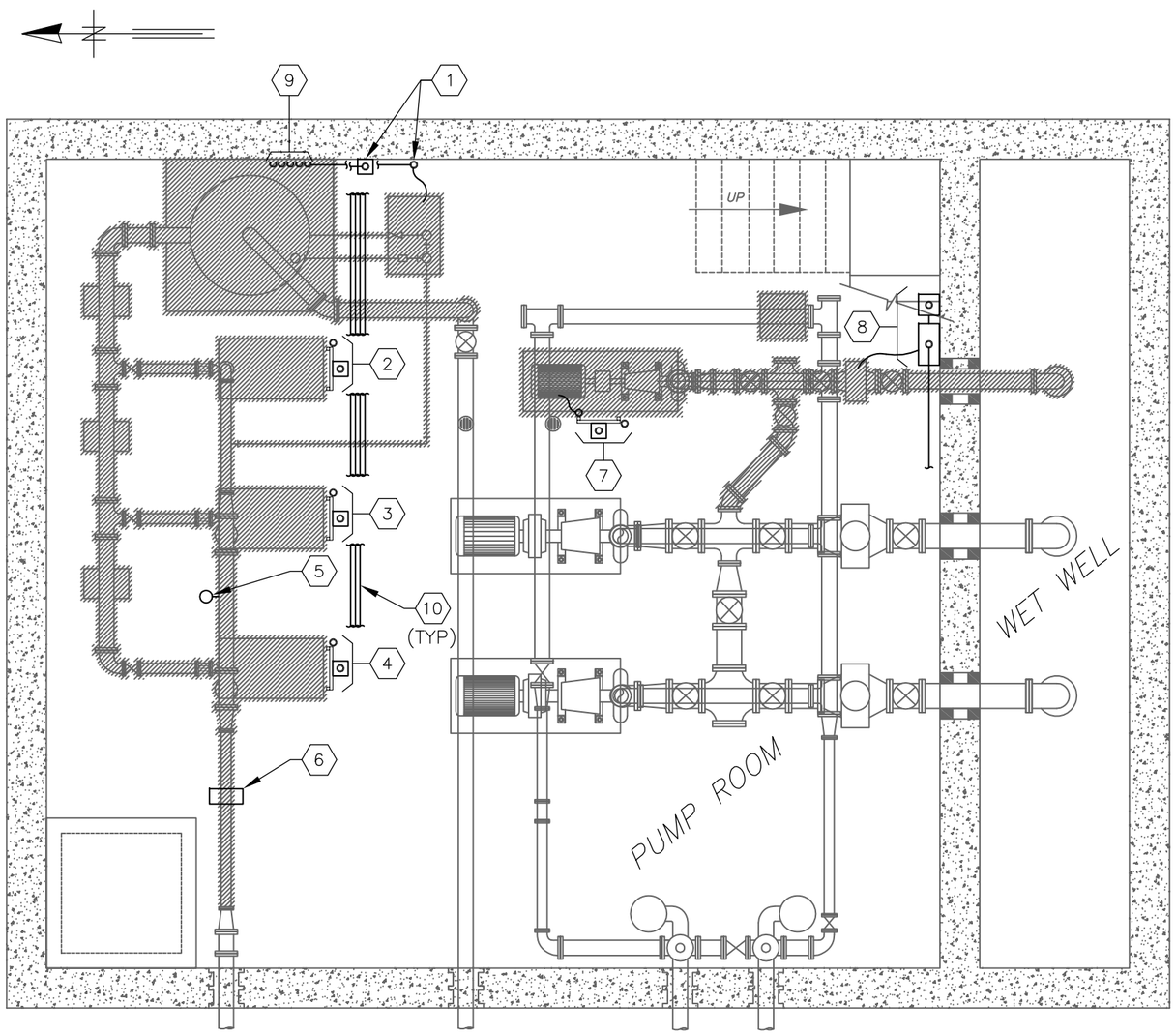

ELECTRICAL DEMOLITION PLAN

ITEMS SHOWN IN HATCHED AREAS ARE TO BE DEMOLISHED AND REMOVED BY MECHANICAL CONTRACTOR

TRICON CONSULTING ENGINEERS
777 S. Harbour Island Blvd,
Suite 870
Tampa, FL 33602
813.227.9190
Certificate of Authorization No. 8363

KEYED NOTES:

1. CONTRACTOR TO REMOVE ALL CONDUIT, CONDUCTORS, PUSHBUTTON, UNISTRUT AND JUNCTION BOXES ASSOCIATED WITH THE EXISTING JOCKEY PUMP TO BE REMOVED. REMOVE CONDUCTORS BACK TO THEIR ORIGIN. CONDUITS SHALL BE CAPPED AT FLOOR SLAB OF MOTOR CONTROL ROOM (FIRST FLOOR).
2. CONTRACTOR TO REMOVE ALL CONDUIT, CONDUCTORS, PUSHBUTTON, UNISTRUT AND JUNCTION BOXES ASSOCIATED WITH THE EXISTING PUMP (PWP–1) TO BE REMOVED. REMOVE CONDUCTORS BACK TO THEIR ORIGIN. CONDUITS SHALL BE CAPPED AT FLOOR SLAB OF MOTOR CONTROL ROOM (FIRST FLOOR).
3. CONTRACTOR TO REMOVE ALL CONDUIT, CONDUCTORS, PUSHBUTTON, UNISTRUT AND JUNCTION BOXES ASSOCIATED WITH THE EXISTING PUMP (PWP–2) TO BE REMOVED. REMOVE CONDUCTORS BACK TO THEIR ORIGIN. CONDUITS SHALL BE CAPPED AT FLOOR SLAB OF MOTOR CONTROL ROOM (FIRST FLOOR).
4. CONTRACTOR TO REMOVE ALL CONDUIT, CONDUCTORS, PUSHBUTTON, UNISTRUT AND JUNCTION BOXES ASSOCIATED WITH THE EXISTING PUMP (PWP–3) TO BE REMOVED. REMOVE CONDUCTORS BACK TO THEIR ORIGIN. CONDUITS SHALL BE CAPPED AT FLOOR SLAB OF MOTOR CONTROL ROOM (FIRST FLOOR).
5. CONTRACTOR TO REMOVE ALL CONDUIT, CONDUCTORS AND JUNCTION BOXES ASSOCIATED WITH THE EXISTING PRESSURE SWITCH TO BE REMOVED. REMOVE CONDUCTORS BACK TO THEIR ORIGIN. CONDUIT SHALL BE CAPPED AT FLOOR SLAB OF MOTOR CONTROL ROOM (FIRST FLOOR). REMOVAL OF PRESSURE SWITCH BY MECHANICAL CONTRACTOR.
6. CONTRACTOR TO REMOVE ALL CONDUIT, CONDUCTORS AND JUNCTION BOXES ASSOCIATED WITH THE EXISTING FLOW METER TO BE REMOVED. REMOVE CONDUCTORS BACK TO THEIR ORIGIN. CONDUIT SHALL BE CAPPED AT FLOOR SLAB OF MOTOR CONTROL ROOM (FIRST FLOOR). REMOVAL OF FLOW METER BY MECHANICAL CONTRACTOR.
7. CONTRACTOR TO REMOVE ALL CONDUCTORS, PUSHBUTTON, LIMIT SWITCH, PRESSURE SWITCH, UNISTRUT AND JUNCTION BOXES ASSOCIATED WITH THE EXISTING SLUDGE PUMP (SP–1) TO BE REMOVED. REMOVE CONDUCTORS BACK TO THEIR ORIGIN. CONDUITS MAY BE REUSED AFTER CLEANING. SOME CONDUIT WILL NEED TO BE REWORKED TO ACCOMMODATE NEW SLUDGE PUMP TO BE INSTALLED. PROVIDE ALL NEW CONDUCTORS.
8. CONTRACTOR TO REMOVE ALL CONDUCTORS, DISCONNECT, CONTROL PANEL, UNISTRUT AND JUNCTION BOXES ASSOCIATED WITH THE EXISTING GRINDER PUMP (G–1) TO BE REMOVED. REMOVE CONDUCTORS BACK TO THEIR ORIGIN. CONDUITS MAY BE REUSED AFTER CLEANING. SOME CONDUIT WILL NEED TO BE REWORKED TO ACCOMMODATE NEW DISCONNECT AND CONTROL PANEL TO BE INSTALLED. PROVIDE ALL NEW CONDUCTORS.
9. EXISTING CONDUITS UP TO PLC PANEL ON FIRST FLOOR.
10. APPROXIMATE LOCATION OF EXISTING CONDUIT/CONDUCTORS ASSOCIATED WITH NOTES 2 THRU 6. THESE CONDUITS ARE TO BE REMOVED.

TIMOTHY THOMAS, P.E. #47079

No.	DATE	REVISIONS
3		
2		
1		

DES: T.DT.
DRN: E.A.K.
CKD: T.DT.
DATE: 9–9–14

CITY of TAMPA
HOWARD F. CURREN
ADVANCED WASTEWATER TREATMENT PLANT

HOWARD F. CURREN A.W.T.P.
MIXED SLUDGE PUMPING STATION REHABILITATION
ELECTRICAL DEMOLITION PLAN

W.O. 5983
SHEET E11 OF 18

TPB014-022

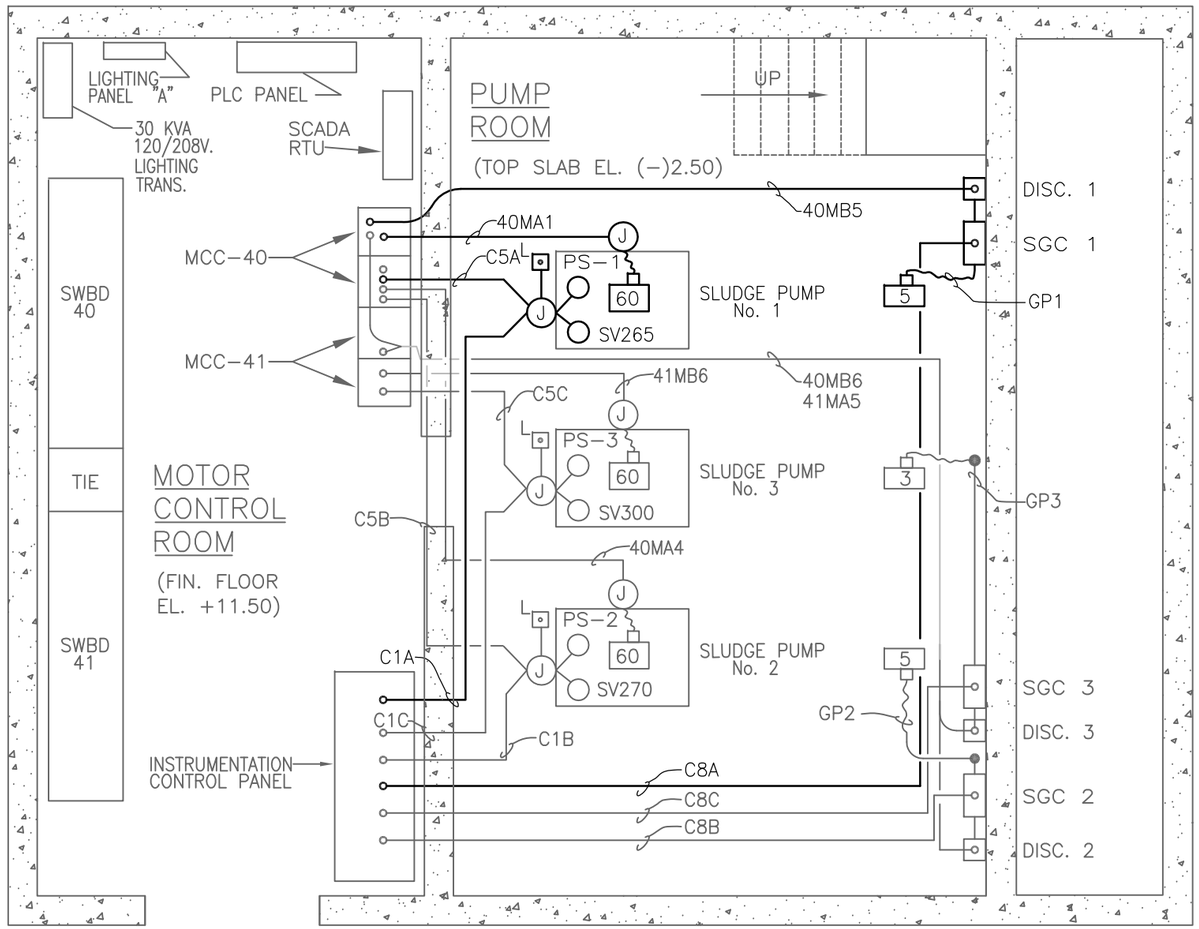

PROPOSED MODIFICATIONS
TO ELECTRICAL PLAN

NOTES:

1. ITEMS SHOWN ON THIS SHEET THAT SHALL BE PROVIDED AND INSTALLED INCLUDE, BUT ARE NOT LIMITED TO, THE FOLLOWING:

   *** GRINDER #1 -- LOCAL NEMA 4X S/S DISCONNECT AND LOCAL NEMA 4X S/S CONTROLLER

   *** SLUDGE PUMP #1 -- CONTROLS AND INTERLOCKS AS SHOWN, STOP/L PUSHBUTTON, SEAL WATER SOLENOID VALVE, SEAL WATER PRESSURE SWITCH.

TRICON CONSULTING ENGINEERS
777 S. Harbour Island Blvd.
Suite 870
Tampa, FL 33602
813.227.9190
Certificate of Authorization No. 8363

TIMOTHY THOMAS, P.E. #47079

No.	DATE	REVISIONS
3		
2		
1		

DES: T.DT.
DRN: E.A.K.
CKD: T.DT.
DATE: 9–9–14

CITY of TAMPA
HOWARD F. CURREN
ADVANCED WASTEWATER TREATMENT PLANT

HOWARD F. CURREN A.W.T.P.
MIXED SLUDGE PUMPING STATION REHABILITATION
PROPOSED ELECTRICAL PLAN

W.O. 5983
SHEET E12 OF 18

TPB014-023

CONDUIT AND CONDUCTOR SCHEDULE

LABEL	CONDUIT SIZE	FROM	TO	REMARKS
C1A	1"	CONTROL PANEL	SLUDGE PUMP #1	STOP/L PS-1 SV265 (2) SPARE 5-TWISTED PR. #16AWG
C1B	1"	CONTROL PANEL	SLUDGE PUMP #2	STOP/L PS-2 SV270 (2) SPARE 5-TWISTED PR. #16AWG
C1C	1"	CONTROL PANEL	SLUDGE PUMP #3	STOP/L PS-3 SV300 (2) SPARE 5-TWISTED PR. #16AWG
C5A	3/4"	CONTROL PANEL	MCC-40-A1	CR263MS MS1-AUX SPARE 3-TWISTED PR. #16AWG
C5B	3/4"	CONTROL PANEL	MCC-40-A4	CR268MS MS2-AUX SPARE 3-TWISTED PR. #16AWG
C5C	3/4"	CONTROL PANEL	MCC-41-B6	CR300MS MS3-AUX SPARE 3-TWISTED PR. #16AWG
C8A	3/4"	CONTROL PANEL	SLUDGE GRINDER #1 CONTROLLER	O/L RELAY RUN LIGHT POWER LIGHT SPARE 4-TWISTED PR. #16AWG
C8B	3/4"	CONTROL PANEL	SLUDGE GRINDER #2 CONTROLLER	O/L RELAY RUN LIGHT POWER LIGHT SPARE 4-TWISTED PR. #16AWG
C8C	3/4"	CONTROL PANEL	SLUDGE GRINDER #3 CONTROLLER	O/L RELAY RUN LIGHT POWER LIGHT SPARE 4-TWISTED PR. #16AWG
40MA1	1-1/2"	MCC-40-B7	SLUDGE PUMP #1	3-#3, 1-#8 B.C. TO MOTOR
40MA4	1-1/2"	MCC-40-A4	SLUDGE PUMP #2	3-#3, 1-#8 B.C. TO MOTOR
41MB6	1-1/2"	MCC-41-B6	SLUDGE PUMP #3	3-#3, 1-#8 B.C. TO MOTOR
40MB5	3/4"	MCC-40-B5	DISC. 1 TO #1 GRINDER CONTROLLER	4-#12
40MB6	3/4"	MCC-40-B6	DISC. 2 TO #2 GRINDER CONTROLLER	4-#12
41MA5	3/4"	MCC-41-A5	DISC. 3 TO #3 GRINDER CONTROLLER	4-#12
GP1	3/4"	#1 GRINDER CONTROLLER	MOTOR 1	4-#12
GP2	3/4"	#2 GRINDER CONTROLLER	MOTOR 2	4-#12
GP3	3/4"	#3 GRINDER CONTROLLER	MOTOR 3	4-#12

TRICON CONSULTING ENGINEERS
777 S. Harbour Island Blvd.
Suite 870
Tampa, FL 33602
813.227.9190
Certificate of Authorization No. 8363

TIMOTHY THOMAS, P.E. #47079

No.	DATE	REVISIONS
3		
2		
1		

DES: T.DT.
DRN: E.A.K.
CKD: T.DT.
DATE: 9-9-14

CITY of TAMPA
HOWARD F. CURREN
ADVANCED WASTEWATER TREATMENT PLANT

HOWARD F. CURREN A.W.T.P.
MIXED SLUDGE PUMPING STATION REHABILITATION
CONDUIT AND CONDUCTOR SCHEDULE

W.O. 5983

SHEET E13 OF 18

TPB014-024

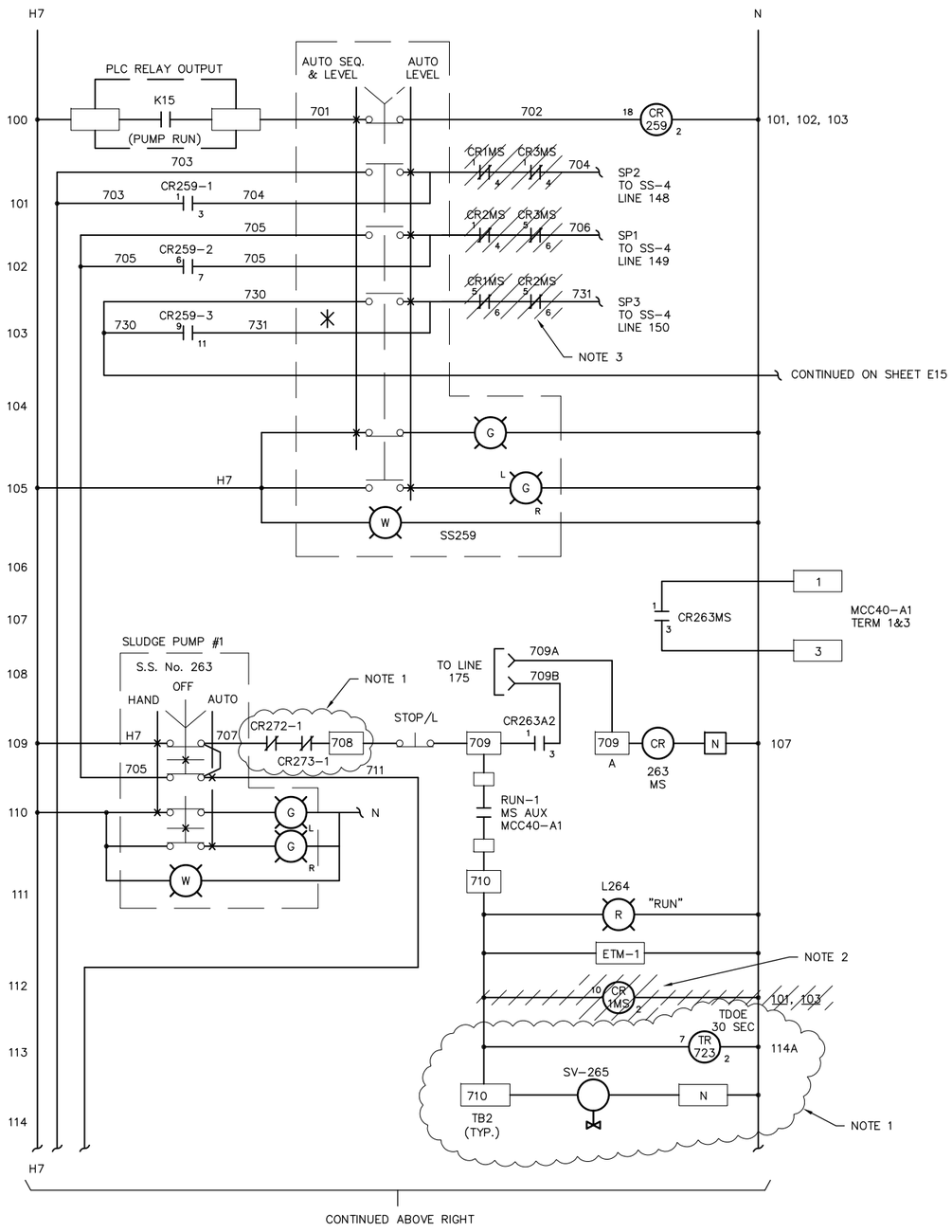

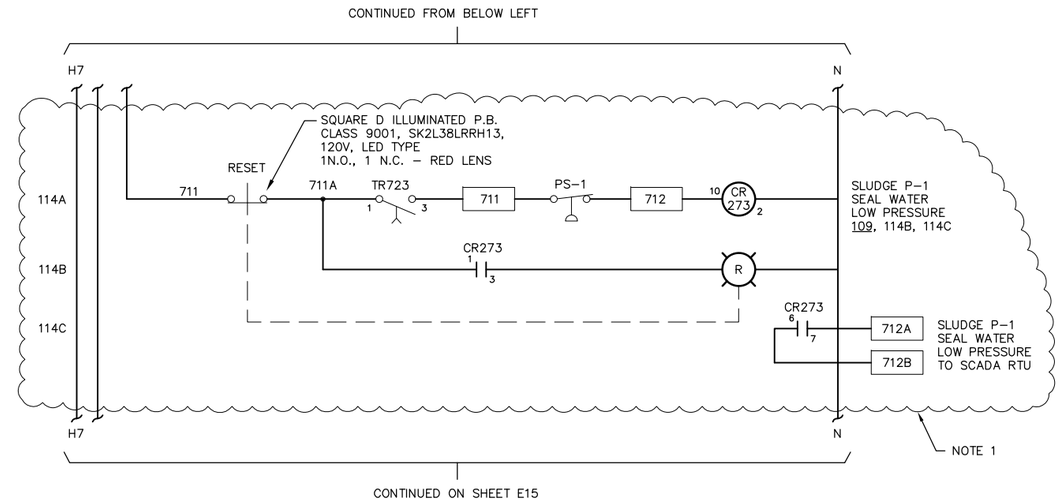

NOTES:

1. CLOUDED AREA SHOWS FACILITIES THAT REQUIRE MODIFICATIONS AND/OR ADDITIONS UNDER THIS CONTRACT.
2. HATCHED AREA INDICATES ITEMS TO BE FIELD VERIFIED FOR ACCURACY BY THE CONTRACTOR. THESE ITEMS ARE NOT REQUIRED AND SHALL BE REMOVED UNDER THIS CONTRACT.
3. HATCHED AREA INDICATES ITEMS TO BE FIELD VERIFIED FOR ACCURACY BY THE CONTRACTOR. THESE ITEMS ARE NOT REQUIRED AND SHALL BE REMOVED UNDER THIS CONTRACT. IF CONTACTS SHOWN ARE REQUIRED TO BE REMOVED, THE CONTRACTOR SHALL INSTALL CONDUCTORS TO CONTINUE THE RESPECTIVE CIRCUITS TO SS-4.

GENERAL NOTE:

THE CONTROL SCHEMATICS SHOWN ARE DEVELOPED FROM THE BEST AVAILABLE AS-BUILT DRAWINGS AND FIELD OBSERVATIONS. THE CONTRACTOR SHALL FIELD VERIFY ALL EXISTING CONDITIONS AND DOCUMENT ANY DISCREPANCIES DISCOVERED.

TRICON CONSULTING ENGINEERS
777 S. Harbour Island Blvd,
Suite 870
Tampa, FL 33602
813.227.9190
Certificate of Authorization No. 8363

TIMOTHY THOMAS, P.E. #47079

No.	DATE	REVISIONS
3		
2		
1		

DES: T.DT.
DRN: E.A.K.
CKD: T.DT.
DATE: 9-9-14

CITY of TAMPA
HOWARD F. CURREN
ADVANCED WASTEWATER TREATMENT PLANT

HOWARD F. CURREN A.W.T.P.
MIXED SLUDGE PUMPING STATION REHABILITATION
SCHEMATIC 1/4

W.O. 5983

SHEET E14 OF 18

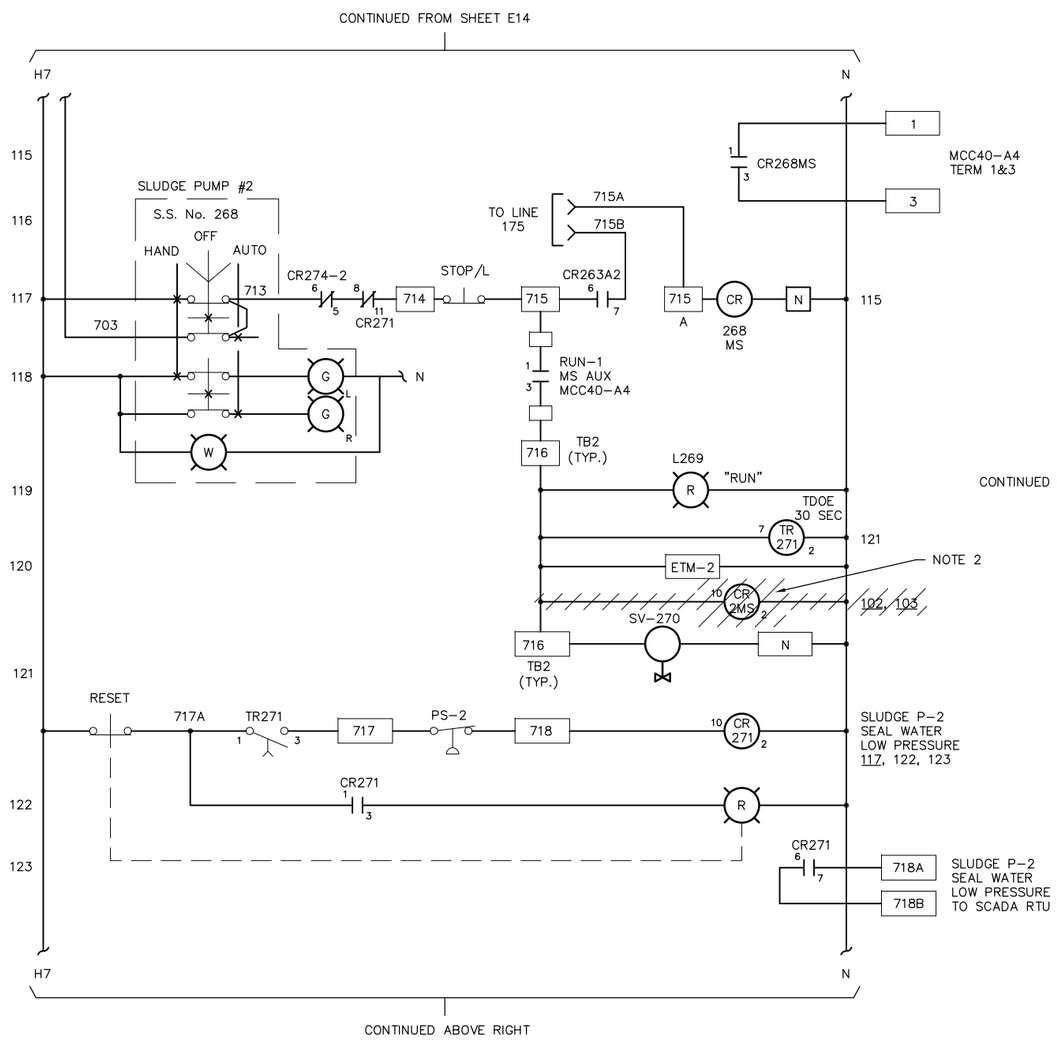

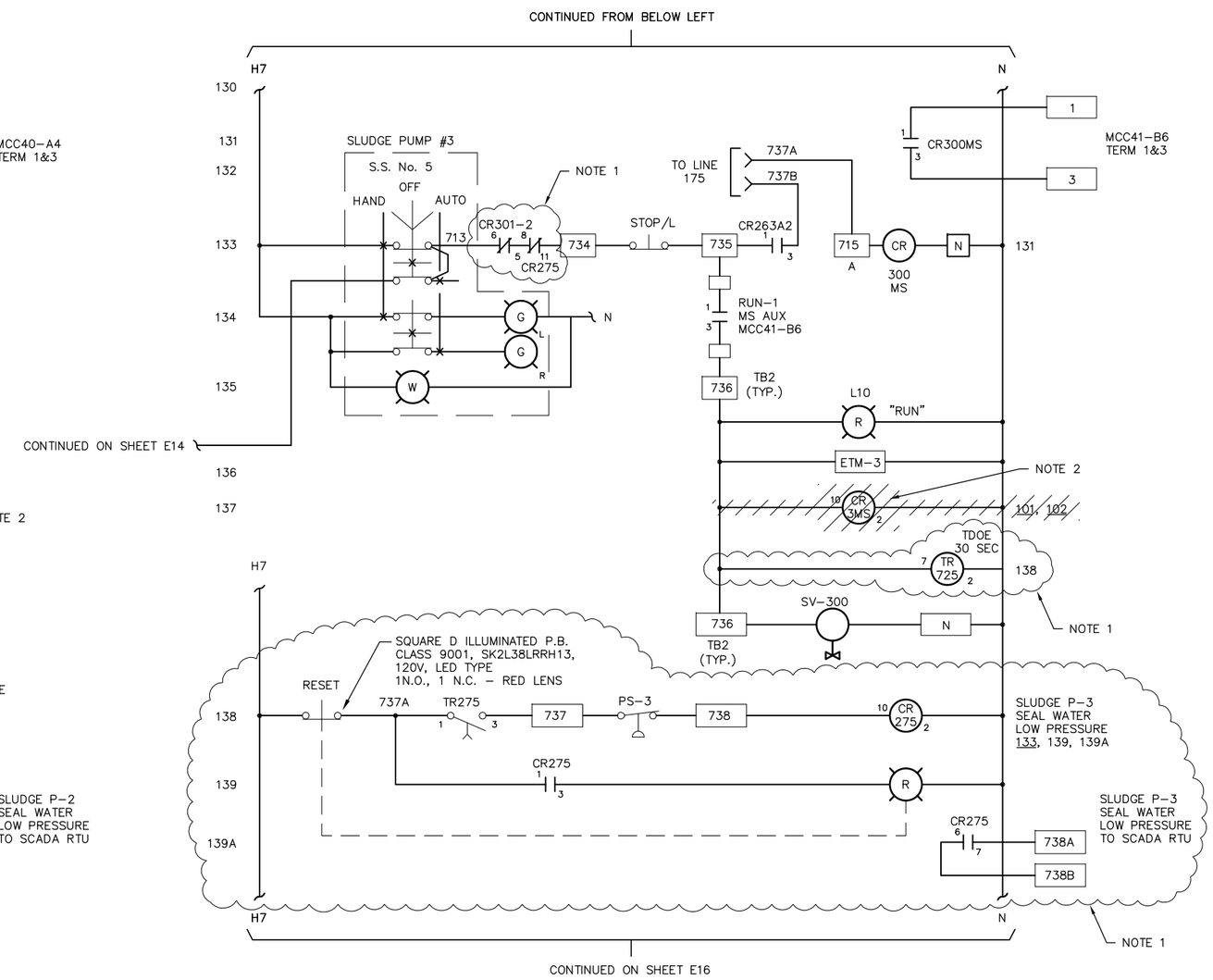

NOTES:

1. CLOUDED AREA SHOWS FACILITIES THAT REQUIRE MODIFICATIONS AND/OR ADDITIONS UNDER THIS CONTRACT.

2. HATCHED AREA INDICATES ITEMS TO BE FIELD VERIFIED FOR ACCURACY BY THE CONTRACTOR. THESE ITEMS ARE NOT REQUIRED AND SHALL BE REMOVED UNDER THIS CONTRACT.

GENERAL NOTE:

THE CONTROL SCHEMATICS SHOWN ARE DEVELOPED FROM THE BEST AVAILABLE AS-BUILT DRAWINGS AND FIELD OBSERVATIONS. THE CONTRACTOR SHALL FIELD VERIFY ALL EXISTING CONDITIONS AND DOCUMENT ANY DISCREPANCIES DISCOVERED.

TRICON CONSULTING ENGINEERS
777 S. Harbour Island Blvd.
Suite 870
Tampa, FL 33602
813.227.9190
Certificate of Authorization No. 8363

TIMOTHY THOMAS, P.E. #47079

No.	DATE	REVISIONS
3		
2		
1		

DES: T.DT.
DRN: E.A.K.
CKD: T.DT.
DATE: 9-9-14

CITY of TAMPA
HOWARD F. CURREN ADVANCED WASTEWATER TREATMENT PLANT

HOWARD F. CURREN A.W.T.P.
MIXED SLUDGE PUMPING STATION REHABILITATION
SCHEMATIC 2/4

W.O. 5983

SHEET E15 OF 18

TPB014-026

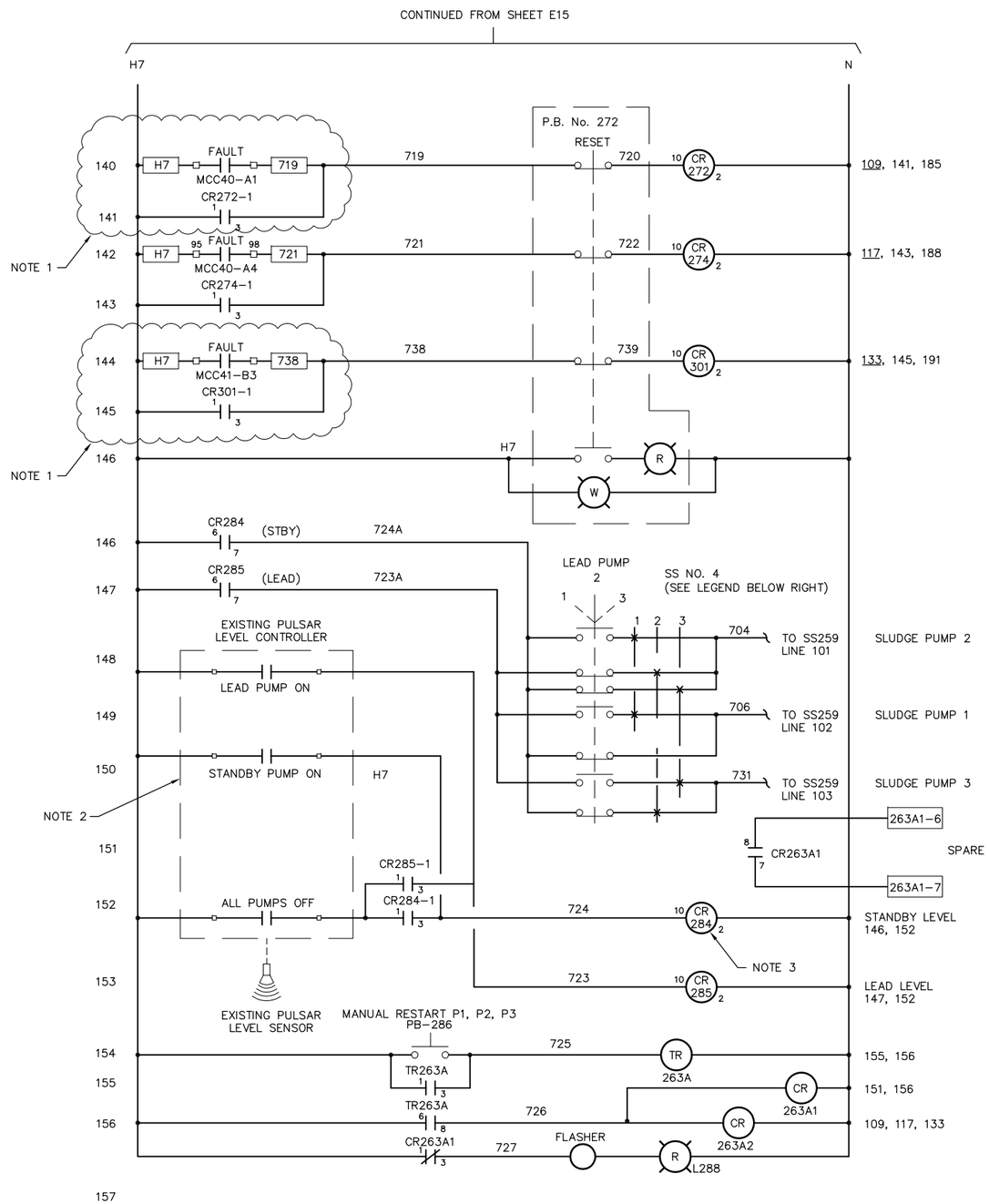

NOTES:

1. CLOUDED AREA SHOWS FACILITIES THAT REQUIRE MODIFICATIONS AND/OR ADDITIONS UNDER THIS CONTRACT.
2. WIRING/CONNECTIONS TO EXISTING PULSAR LEVEL CONTROLLER TO BE FIELD VERIFIED FOR ACCURACY BY THE CONTRACTOR. CONTRACTOR SHALL MODIFY IF REQUIRED.
3. CONTRACTOR TO PROVIDE MISSING RELAY AND CHECK FOR PROPER CONNECTIONS.

GENERAL NOTE:

THE CONTROL SCHEMATICS SHOWN ARE DEVELOPED FROM THE BEST AVAILABLE AS-BUILT DRAWINGS AND FIELD OBSERVATIONS. THE CONTRACTOR SHALL FIELD VERIFY ALL EXISTING CONDITIONS AND DOCUMENT ANY DISCREPANCIES DISCOVERED.

LEGEND		
SS NO.4	SLUDGE PUMP LEAD SWITCH	
	LEAD	STANDBY
POS-1	PUMP NO. 1	PUMP NO. 2
POS-2	PUMP NO. 2	PUMP NO. 3
POS-3	PUMP NO. 3	PUMP NO. 2

TRICON CONSULTING ENGINEERS
777 S. Harbour Island Blvd.
Suite 870
Tampa, FL 33602
813.227.9190
Certificate of Authorization No. 8363

No.	DATE	REVISIONS
3		
2		
1		

TIMOTHY THOMAS, P.E. #47079

DES: T.DT.
DRN: E.A.K.
CKD: T.DT.
DATE: 9-9-14

CITY of TAMPA
HOWARD F. CURREN
ADVANCED WASTEWATER TREATMENT PLANT

HOWARD F. CURREN A.W.T.P.
MIXED SLUDGE PUMPING STATION REHABILITATION
SCHEMATIC 3/4

W.O. 5983

SHEET E16 OF 18

TPB014-027

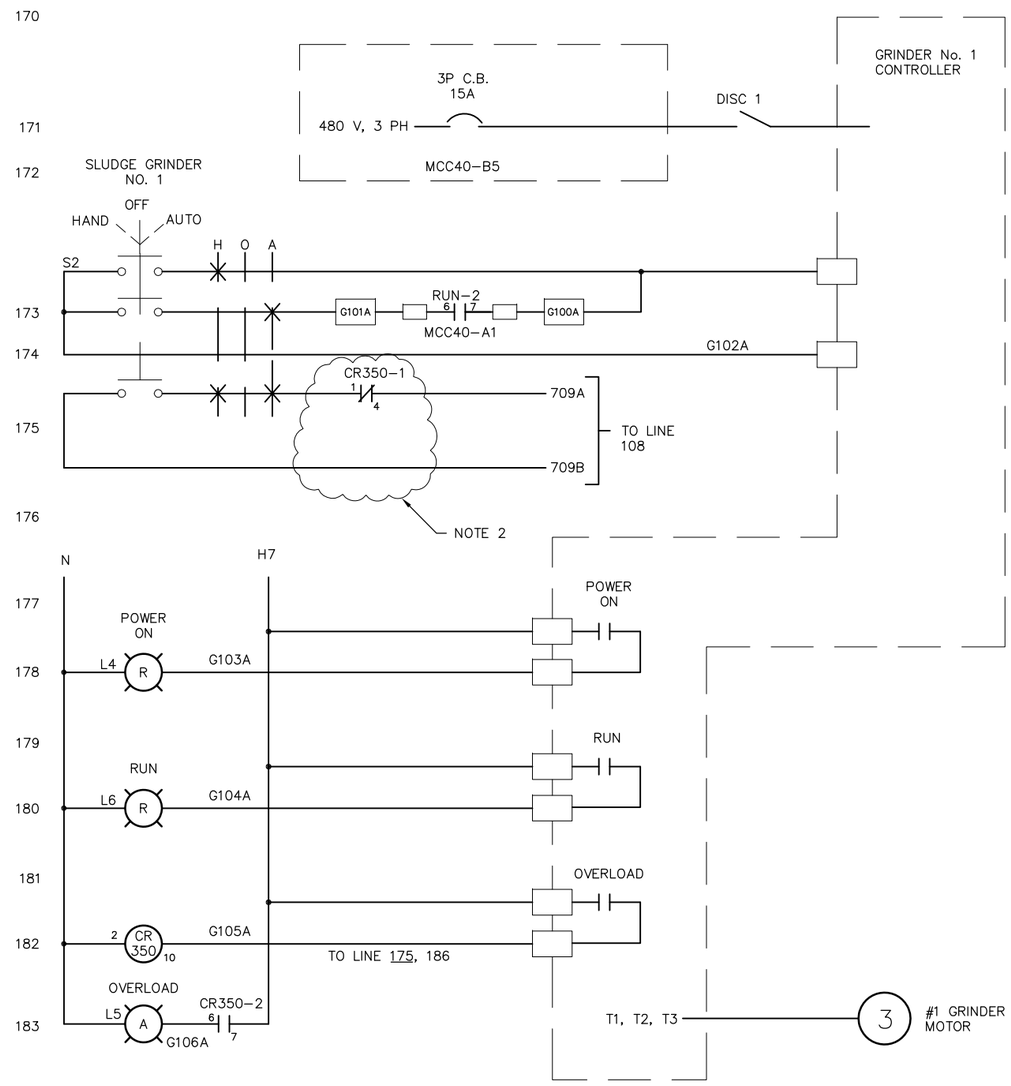

SLUDGE GRINDER CONTROLS

No. 1 SHOWN, No. 2 AND No. 3 CONTROLS ARE IDENTICAL.
(SEE CROSS REFERENCE TABLE)

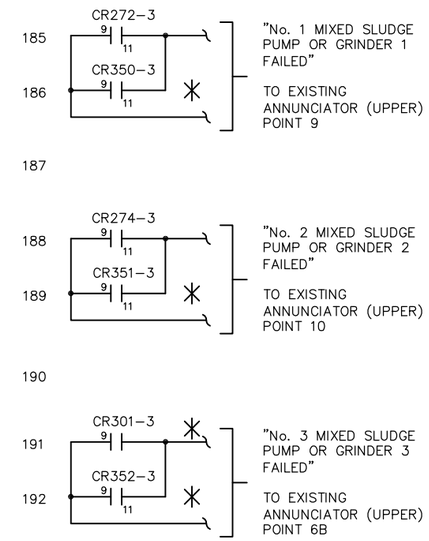

NOTES:

1. ITEMS SHOWN ON THIS SHEET THAT SHALL BE PROVIDED AND INSTALLED INCLUDE, BUT ARE NOT LIMITED TO, THE FOLLOWING :

   *** GRINDER #1 – LOCAL NEMA 4X S/S DISCONNECT, LOCAL NEMA 4X S/S CONTROLLER.

2. CLOUDED AREA SHOWS FACILITIES THAT REQUIRE MODIFICATIONS UNDER THIS CONTRACT.

TRICON CONSULTING ENGINEERS
777 S. Harbour Island Blvd.
Suite 870
Tampa, FL 33602
813.227.9190
Certificate of Authorization No. 8363

TIMOTHY THOMAS, P.E. #47079

No.	DATE	REVISIONS
3		
2		
1		

DES: T.DT.
DRN: E.A.K.
CKD: T.DT.
DATE: 9–9–14

CITY of TAMPA
HOWARD F. CURREN
ADVANCED WASTEWATER TREATMENT PLANT

HOWARD F. CURREN A.W.T.P.
MIXED SLUDGE PUMPING STATION REHABILITATION
SCHEMATIC 4/4

W.O. 5983

SHEET
E17
OF 18

SOFTSTARTER SET UP PARAMETERS

UPON START–UP OF SOFT STARTER, THE CONTRACTOR SHALL DOCUMENT THE INITIAL CONTROL PARAMETERS AND SETTING UTILIZED.

THE SETTINGS FOR THE SOFT STARTER SHALL BE PROVIDED ON AN 8" X 11" LAMINATED DOCUMENT AND SHALL BE PLACED ON THE INNER DOOR OF THE SOFT STARTER (MOTOR STARTER CUBICLE).

THE MINIMUM PARAMETERS TO BE DOCUMENTED SHALL INCLUDE :

1. SOFT STARTER FULL LOAD CURRENT
2. MOTOR FULL LOAD CURRENT
3. SOFT STARTER RATED POWER
4. CONNECTION TYPE (LINE OR INSIDE DELTA)
5. RATED LINE VOLTAGE
6. OVERCURRENT TRIP AS A FUNCTION OF FULL LOAD AMPERES
7. UNDERCURRENT DELAY (IN SECONDS)
8. OVERCURRENT SHEAR PIN (% OF FULL LOAD CURRENT)
9. OVERCURRENT TIME DELAY
10. OVERLOAD CLASS
11. OVERLOAD PROTECT ENABLE WHILE RUN
12. UNDERVOLT TRIP (% OF LINE VOLTAGE)
13. UNDERVOLTAGE TRIP DELAY (IN SECONDS)
14. OVERVOLTAGE TRIP (% OF LINE VOLTAGE)
15. OVERVOLTAGE TRIP DELAY (IN SECONDS)
16. SOFT START CURVE
17. PULSE TIME (IN SECONDS)
18. INITIAL VOLTAGE (% OF LINE VOLTAGE)
19. INITIAL CURRENT (% OF FULL LOAD CURRENT)
20. CURRENT LIMIT OF FULL LOAD (% OF FULL LOAD CURRENT)
21. ACCELERATION TIME (IN SECONDS)
22. MAX START TIME (IN SECONDS)
23. NUMBER OF STARTS (NUMBER OF STARTS PERMITTED IN START PERIOD)
24. STARTS PERIOD (1–60 MINUTE PERIOD)
25. START INHIBIT (1–60 MINUTES)
26. SOFT STOP CURVE
27. DECELERATION TIME (IN SECONDS)
28. FINAL TORQUE

TRICON CONSULTING ENGINEERS
777 S. Harbour Island Blvd.
Suite 870
Tampa, FL 33602
813.227.9190
Certificate of Authorization No. 8363

TIMOTHY THOMAS, P.E. #47079

No.	DATE	REVISIONS
3		
2		
1		

DES: T.DT.
DRN: E.A.K.
CKD: T.DT.
DATE: 9–9–14

CITY of TAMPA
HOWARD F. CURREN
ADVANCED WASTEWATER TREATMENT PLANT

HOWARD F. CURREN A.W.T.P.
MIXED SLUDGE PUMPING STATION REHABILITATION
DOCUMENTATION OF SOFT STARTER PARAMETERS

W.O. 5983

SHEET E18 OF 18