The Enclosed Document Is Provided For Your Convenience.

Please Email ALL Questions:

MailTo:ContractAdministration@TampaGov.net

Please Let Us Know If You Plan To Bid

City of Tampa
Contract Administration Department
306 E. Jackson St. #280A4N
Tampa, FL 33602
(813)274-8456

TPB013-028

LOCATION MAP

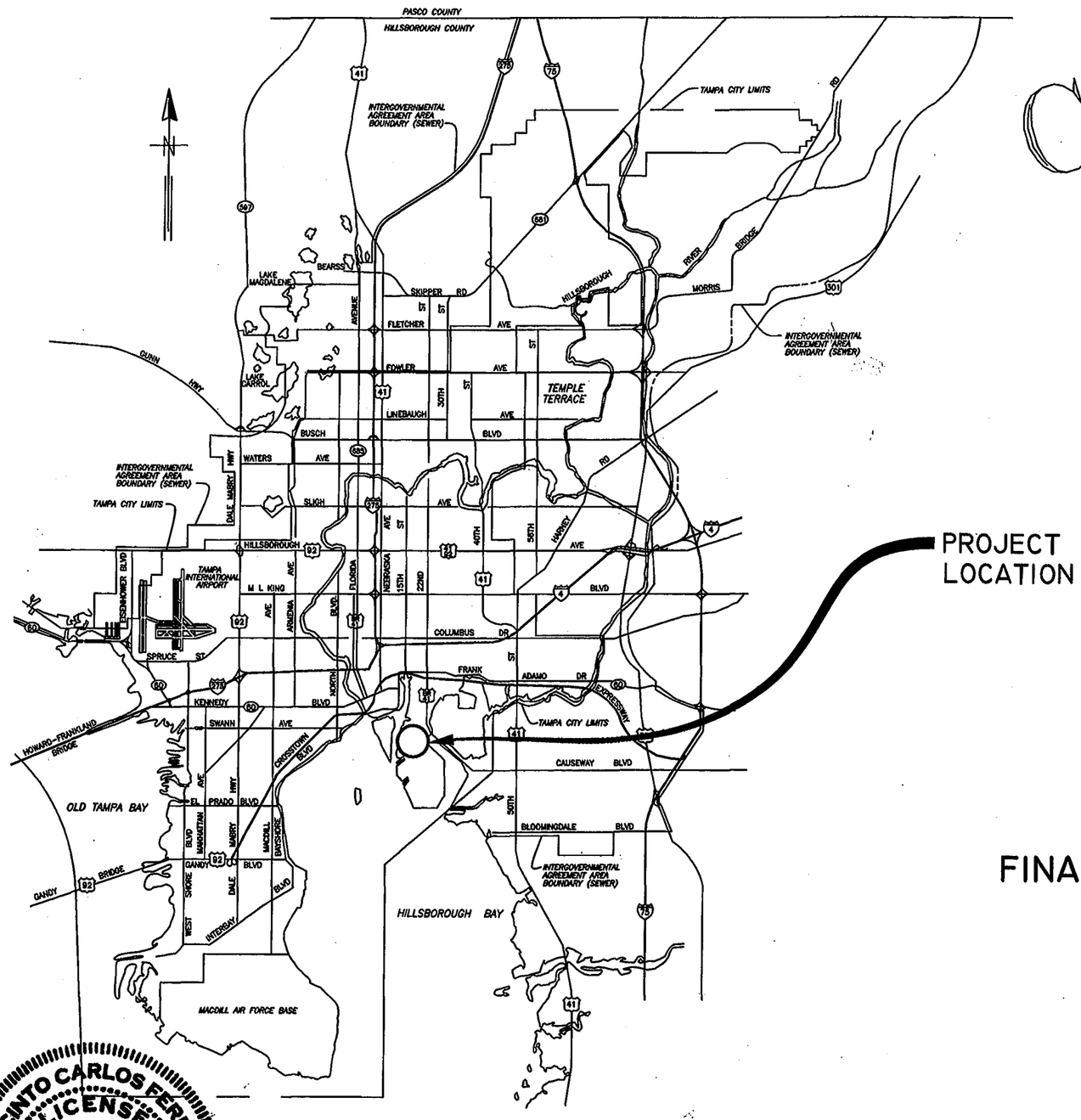

CITY of TAMPA

CITY OF TAMPA FLORIDA
ORGANIZED JULY 15 1887
MASCOTTE

WASTEWATER DEPARTMENT

PLANS FOR

FINAL SEDIMENTATION TANKS REHABILITATION PHASE 2

CONTRACT No.
14-C-00028

JACINTO CARLOS FERRAS
LICENSE
No 49454
STATE OF FLORIDA
PROFESSIONAL ENGINEER

Jacinto Carlos Ferras 6/11/14
JACINTO CARLOS FERRAS, P.E. #49454
WASTEWATER DIVISION HEAD
WASTEWATER DEPARTMENT

No.	DATE	REVISIONS
3		
2		
1		

DES: JH
DRN: JHJ
CKD: JF
DATE: 6/10/14

CITY of TAMPA
WASTEWATER DEPARTMENT

COVER SHEET

W.O. 5971
SHEET
1

User: ss13 Drawing Name: K:\WW_Projects\2013\2013_5971_Final Sedimentation Tanks Rehabilitation Phase 2\DWG\FINAL SEDIMENTATION TANKS REHABILITATION PHASE 2.dwg
Layout - May 02, 2014 - 3:32pm CTB - MONOCHROME.CTB

TPB013-029

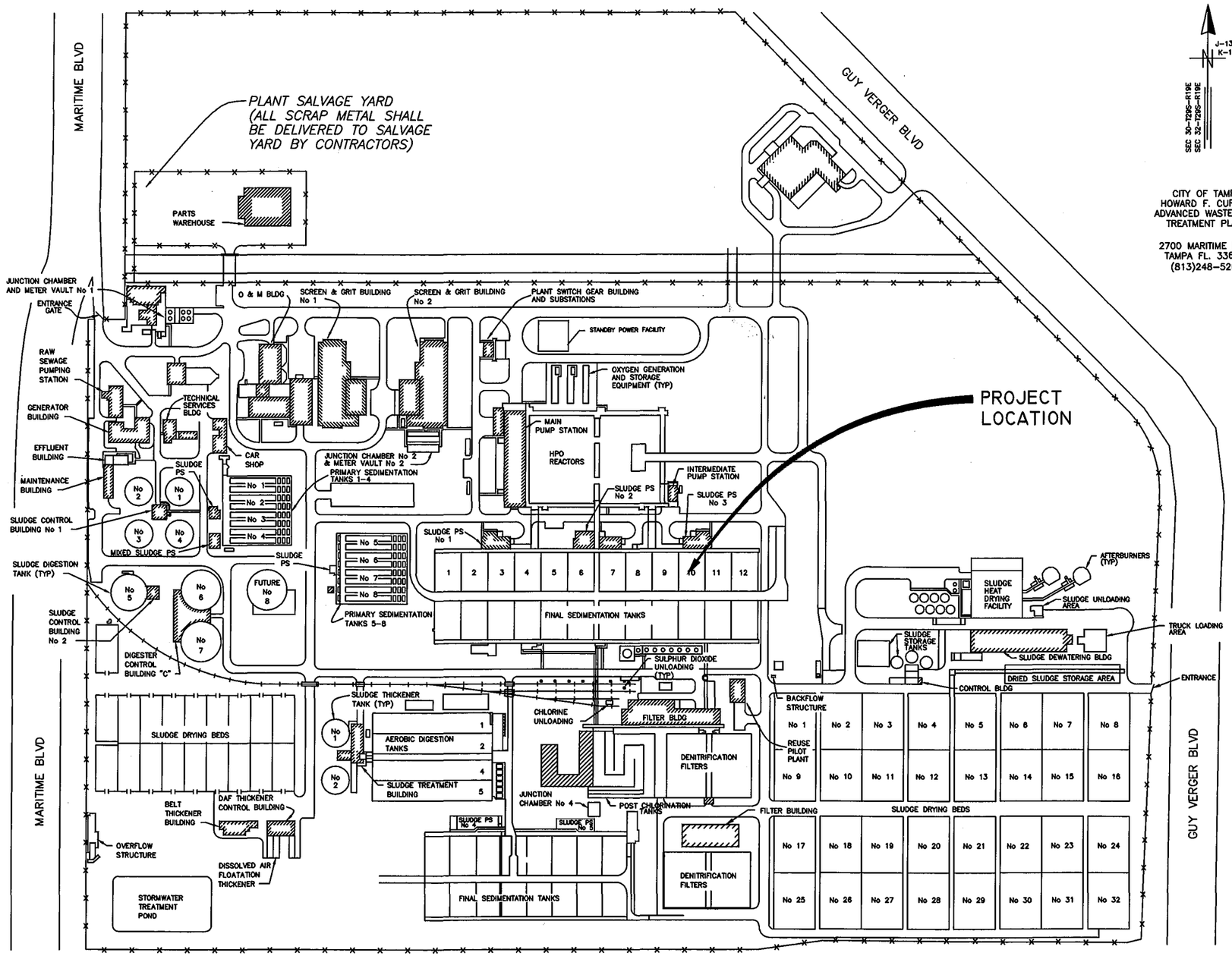

LOCATION MAP

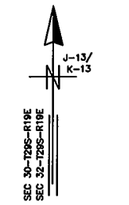

CITY OF TAMPA
HOWARD F. CURREN
ADVANCED WASTEWATER
TREATMENT PLANT

2700 MARITIME BLVD.
TAMPA FL. 33605
(813)248-5269

INDEX

SHT. NO.	TITLE
1.	COVER SHEET
2.	PROJECT MAP & INDEX
3.	FINAL SEDIMENTATION TANKS OVERVIEW
4.	CONSTRUCTION & DEMOLITION NOTES
5.	SEDIMENTATION TANKS 7 THRU 12 PLAN VIEW
6.	FINAL SEDIMENTATION TANK SECTIONS
7.	SEDIMENTATION TANKS CROSS COLLECTOR SECTIONS
8.	INFLUENT END LONGITUDINAL COLLECTOR SECTIONS
9.	EFFLUENT END LONGITUDINAL COLLECTOR SECTIONS
10.	INFLUENT END MODIFICATIONS DETAILS
11.	PROPOSED INLET BAFFLE & SUPPORT DETAILS
12.	PROPOSED IDLER SHAFT WALL MOUNT MODIFICATIONS
13.	PROPOSED WALL MODIFICATIONS @ INFLUENT END

JACINTO CARLOS FERRAS, P.E., #49454
DESIGN DIVISION HEAD
WASTEWATER DEPARTMENT

No.	DATE	REVISIONS
3		
2		
1		

DES: JH
DRN: JHJ
CKD: JF
DATE: 6/10/14

CITY of TAMPA
WASTEWATER DEPARTMENT

FINAL SEDIMENTATION TANKS REHABILITATION
PHASE 2
PROJECT MAP AND INDEX

W.O. 5971
SHEET
2

User: ss13 Drawing Name: K:\WW_Projects\2013\2013_5971_Final Sedimentation Tanks Rehabilitation Phase 2\DWG\FINAL SEDIMENTATION TANKS REHABILITATION PHASE 2.dwg
Layout– Jun 16, 2014 – 11:34am

TPB013-030

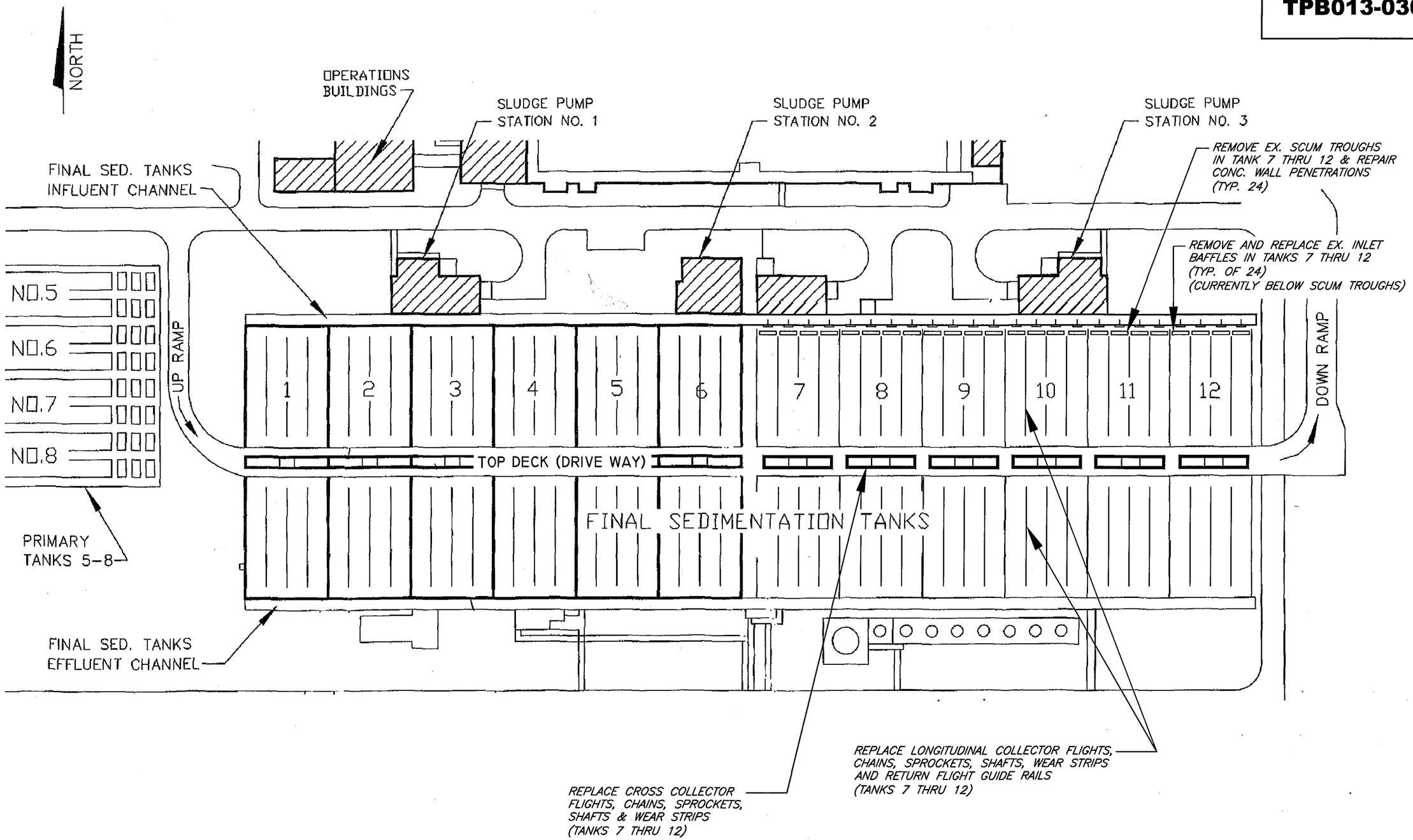

JACINTO CARLOS FERRAS, P.E., #49454
DESIGN DIVISION HEAD
WASTEWATER DEPARTMENT

No.	DATE	REVISIONS
3		
2		
1		

DES: JH
DRN: JHJ
CKD: JF
DATE: 6/10/14

CITY of TAMPA
WASTEWATER DEPARTMENT

FINAL SEDIMENTATION TANKS REHABILITATION
PHASE 2
FINAL SEDIMENTATION TANKS OVERVIEW

W.O. 5971
SHEET
3

User: ss13 Drawing Name: K:\WW_Projects\2013\2013_5971_Final Sedimentation Tanks Rehabilitation Phase 2\DWG\FINAL SEDIMENTATION TANKS REHABILITATION PHASE 2.dwg
Layout- Jun 16, 2014 - 11:34am

CONSTRUCTION NOTES

GENERAL

A–1. CONTRACTOR SHALL COORDINATE ALL CONSTRUCTION ACTIVITIES WITH TREATMENT PLANT PERSONNEL AND PLANT OPERATIONS.

A–2. EXISTING DIMENSIONS AND ELEVATIONS ARE BASED ON THE BEST INFORMATION AVAILABLE. TRUE DIMENSIONS AND ELEVATIONS SHALL BE DETERMINED IN THE FIELD PRIOR TO LAYOUT AND SHOP DRAWING SUBMITTALS.

A–3. ALL SUBMITTALS AND SHOP DRAWINGS SHALL BE ORIGINALS OR HIGH QUALITY COPIES (EASILY READABLE). NO FAXED SHEETS OR POOR QUALITY COPIES WILL BE ACCEPTED FOR SUBMITTAL REVIEW.

A–4. CONTRACTOR SHALL WORK IN NO MORE THAN TWO TANKS AT ANY TIME. CONTRACTOR SHALL COMPLETE TANKS 11 & 12 PRIOR TO WORKING ON THE OTHER FOUR TANKS.

A–5. SEDIMENTATION TANKS (AND INFLUENT CHANNEL) MAY NEED TO BE USED FOR STORAGE IN CASE OF AN EMERGENCY. IN SUCH CASE, THE CONTRACTOR MAY BE REQUIRED TO EVACUATE THE SEDIMENTATION TANKS AT ANY TIME WITH LESS THAN 30–MINUTES NOTICE. FOR THIS PURPOSE, CONTRACTOR MUST REMOVE ALL CONSTRUCTION EQUIPMENT AND MATERIALS FROM THE TANKS AT THE END OF EACH WORKING DAY.

A–6. AWTP PERSONNEL SHALL BE RESPONSIBLE FOR DRAINING SEDIMENTATION TANKS. CONTRACTOR SHALL PROVIDE A MINIMUM OF FIVE WORKING DAYS NOTICE (IN WRITING) BEFORE HAVING AWTP PERSONNEL DRAIN A TANK.

A–7. CONTRACTOR SHALL NOT GROUT ANY COLLECTOR SHAFT ASSEMBLIES OR GUIDE RAIL BRACKETS IN PLACE UNTIL THE TANK SET–UP HAS BEEN INSPECTED AND APPROVED BY THE CITY'S INSPECTOR AND THE COLLECTOR SYSTEM MANUFACTURER'S (POLYCHEM) REPRESENTATIVE.

A–8. ALL HARDWARE, UNLESS OTHERWISE NOTED, SHALL BE TYPE 316 STAINLESS STEEL.

A–9. ALL WEAR STRIP REPLACEMENT SHALL BE ¾" x 3" x 10' WEAR STRIPS MANUFACTURED FROM STARBOARD, AS SUPPLIED BY CURBELL PLASTICS, INCORPORATED. WEAR STRIPS SHALL BE PROVIDED WITH COUNTER–SUNK BOLT HOLES AND SLOTS SO AS TO PROVIDE ½" OF CLEARANCE BETWEEN THE TOP OF THE WEAR STRIP AND THE TOP OF THE COUNTERSUNK BOLT.

A–10. LEADING ENDS OF WEAR STRIPS SHALL BE CUT AT A 45–DEGREE ANGLE SO AS TO PREVENT TRAVELING FLIGHTS FROM CATCHING WEAR STRIP ENDS.

A–11. CONTRACTOR'S WORK SHALL NOT INVOLVE REMOVAL OR INSTALLATION OF THE SLUDGE COLLECTORS' DRIVE MOTORS OR GEAR BOXES. DRIVE UNITS SHALL BE PROVIDED BY AND INSTALLED BY CITY FORCES.

A–12. CONTRACTOR SHALL CONSULT WITH POLYCHEM PERSONNEL TO DETERMINE APPROPRIATE LOCATIONS FOR WEAR STRIPS ON TANKS' FLOORS (AND ASSOCIATED LOCATIONS FOR FLIGHT WEAR SHOES, CHAINS, AND SPROCKETS) IN ORDER TO AVOID CONFLICTING WITH EXISTING STEEL RAILS EMBEDDED IN TANKS' CONCRETE FLOORS. CONTRACTOR SHALL SUBMIT PROPOSED LOCATIONS FOR APPROVAL BY THE CITY'S ENGINEER.

CROSS COLLECTORS

B–1. CONTRACTOR SHALL REMOVE AND REPLACE ALL CROSS COLLECTOR SHAFTS, CHAINS SPROCKETS, FLIGHTS, WEAR STRIPS AND ALL APPURTENANT ITEMS IN TANKS 7 THRU 12. FLIGHTS, CHAINS, SPROCKETS AND SHAFTS SHALL BE AS SUPPLIED BY POLYCHEM SYSTEMS, A DIVISION OF BRENTWOOD INDUSTRIES.

LONGITUDINAL COLLECTORS

C–1. ALL IDLER (NON–DRIVE) SHAFTS IN SEDIMENTATION TANKS 7 THRU 12 SHALL BE REPLACED W/ IDLER STUB SHAFT AND SPROCKET ASSEMBLIES MADE OF CAST NYLON–6 WITH SELF–LUBRICATED BEARINGS, AS SUPPLIED BY POLYCHEM SYSTEMS, A DIVISION OF BRENTWOOD INDUSTRIES.

C–2. CONTRACTOR SHALL REPLACE ALL RETURN FLIGHT GUIDE RAILS, WEAR STRIPS, AND RAIL SUPPORT BRACKETS IN TANKS 7 THRU 12.

C–3. EXISTING WEAR STRIPS AT THE BOTTOM OF THE LONGITUDINAL COLLECTORS SHALL BE REPLACED (AND RELOCATED) WITH NEW WEAR STRIPS. WEAR STRIP TERMINATIONS ON BOTH SIDES OF FLIGHTS SHALL BE STAGGERED FROM ONE ANOTHER.

C–4. ALL RETURN FLIGHT GUIDE RAILS SHALL BE REPLACED WITH 20–FOOT LENGTHS OF 3" x 3" x ⅜" THICK FIBERGLASS ANGLE, WITH A DESIGN LOADING OF 2.5 LB/FT, AS SUPPLIED BY POLYCHEM SYSTEMS. GUIDE RAIL TERMINATION ON BOTH SIDES OF FLIGHTS SHALL BE STAGGERED FROM ONE ANOTHER.

C–5. ALL PROPOSED FLIGHT GUIDE RAILS SHALL BE SUPPORTED AT 10–FOOT (MAX.) INTERVALS BY WALL BRACKET ASSEMBLIES MANUFACTURED FROM NYLON 6–6, AS SUPPLIED BY POLYCHEM SYSTEMS.

C–6. WEAR STRIPS SHALL BE FASTENED TO FIBERGLASS GUIDE RAILS WITH ¼" TYPE 316 SS COUNTERSUNK BOLTS AND 316 SS NYLON INSERT SELF–LOCKING NUTS (NY–LOCK NUTS) AT INTERVALS OF 2.5– FEET (MAX).

C–7. GUIDE RAIL BRACKETS TO BE MOUNTED ON HORIZONTAL CONCRETE BEAM SECTIONS (ON PIER LINES "A" AND "B") SHALL BE MOUNTED USING 1/4"–THICK T–304 STAINLESS STEEL WALL BRACKET ADAPTER PLATES (SUPPLIED BY POLYCHEM) IN ORDER TO PREVENT ANCHOR BOLTS FROM BEING SET WITHIN 3–INCHES OF CONCRETE EDGES.

DEMOLITION NOTES

D–1. CONTRACTOR SHALL WORK IN NO MORE THAN TWO TANKS AT ONE TIME.

D–2. SEDIMENTATION TANKS (AND INFLUENT CHANNEL) MAY NEED TO BE USED FOR STORAGE IN CASE OF AN EMERGENCY. IN SUCH CASE, THE CONTRACTOR MAY BE REQUIRED TO EVACUATE THE SEDIMENTATION TANKS AT ANY TIME WITH LESS THAN 30–MINUTES NOTICE. FOR THIS PURPOSE, CONTRACTOR MUST REMOVE ALL EQUIPMENT AND LOOSE MATERIALS FROM THE TANKS AT THE END OF EACH WORKING DAY.

D–3. THE UPPER DECK OF THE SEDIMENTATION TANKS SHALL BE KEPT CLEAN OF MATERIALS AND DEBRIS AT ALL TIMES. WALKWAYS AND DRIVEWAY SHALL BE KEPT CLEAR FOR AWTP PERSONNEL TO PASS THROUGH.

D–4. SALVAGEABLE MATERIAL, AS DETERMINED BY AWTP PERSONNEL, SHALL BE DELIVERED TO THE PARTS WAREHOUSE LOCATED ON THE TREATMENT PLANT SITE. NON–SALVAGEABLE MATERIALS ARE TO BE REMOVED FROM THE SITE AND PROPERLY DISPOSED OF AT THE CONTRACTOR'S EXPENSE.

D–5. CONTRACTOR SHALL REMOVE ALL EXISTING COLLECTOR SHAFTS, SUPPORT AND BRACKETS AND GROUT BACK TO A SMOOTH CONCRETE SURFACE. CONTRACTOR SHALL CUT ANY EXPOSED STEEL BACK TO 1–INCH BELOW WALL SURFACE AND GROUT OVER.

D–6. CONTRACTOR SHALL REMOVE ALL EXISTING SCUM TROUGHS AND ASSOCIATED WALL BRACKETS AND ACTUATORS AND REPAIR WALL SLEEVES AS PER DETAILS IN PLANS.

JACINTO CARLOS FERRAS, P.E., #49454
DESIGN DIVISION HEAD
WASTEWATER DEPARTMENT

No.	DATE	REVISIONS
3		
2		
1		

DES: JH
DRN: JHJ
CKD: JF
DATE: 6/10/14

CITY of TAMPA
WASTEWATER DEPARTMENT

FINAL SEDIMENTATION TANKS REHABILITATION
PHASE 2
CONSTRUCTION / DEMOLITION NOTES

W.O. 5971
SHEET
4

User: ss13 Drawing Name: K:\WW_Projects\2013\2013_5971_Final Sedimentation Tanks Rehabilitation Phase 2\DWG\FINAL SEDIMENTATION TANKS REHABILITATION PHASE 2.dwg
Layout– Jun 16, 2014 – 11:34am

TPB013-032

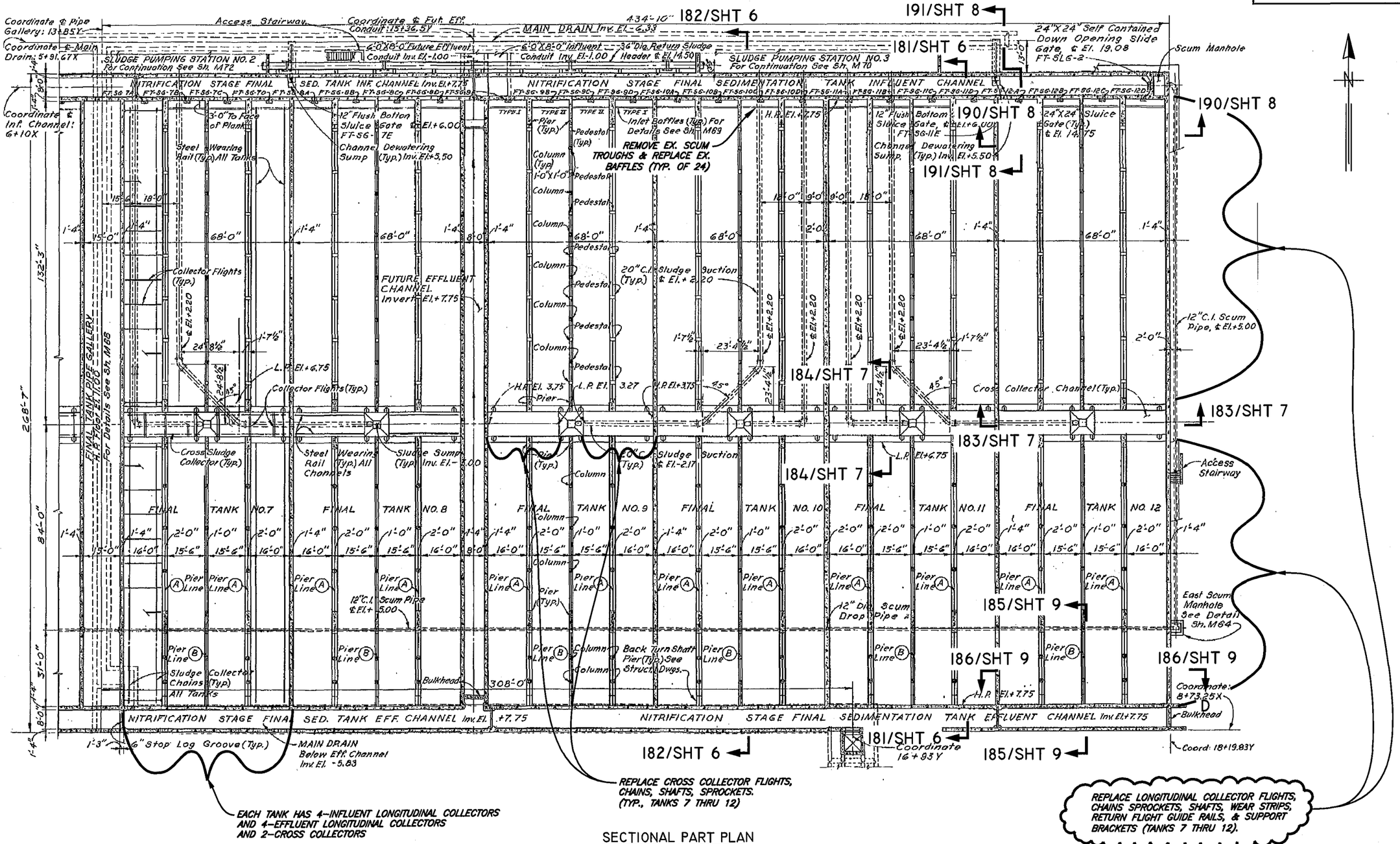

SECTIONAL PART PLAN
N.T.S.

User: ss13 Drawing Name: K:\WW_Projects\2013\2013_5971_Final Sedimentation Tanks Rehabilitation Phase 2\DWG\FINAL SEDIMENTATION TANKS REHABILITATION PHASE 2.dwg
Layout– Jun 16, 2014 – 11:34am

JACINTO CARLOS FERRAS, P.E., #49454 DESIGN DIVISION HEAD WASTEWATER DEPARTMENT	No. / DATE / REVISIONS 3 2 1	DES: JH DRN: JHJ CKD: JF DATE: 6/10/14	CITY of TAMPA WASTEWATER DEPARTMENT	FINAL SEDIMENTATION TANKS REHABILITATION PHASE 2 SEDIMENTATION TANKS 7 THRU 12 PLAN VIEW	W.O. 5971 SHEET 5

TPB013-033

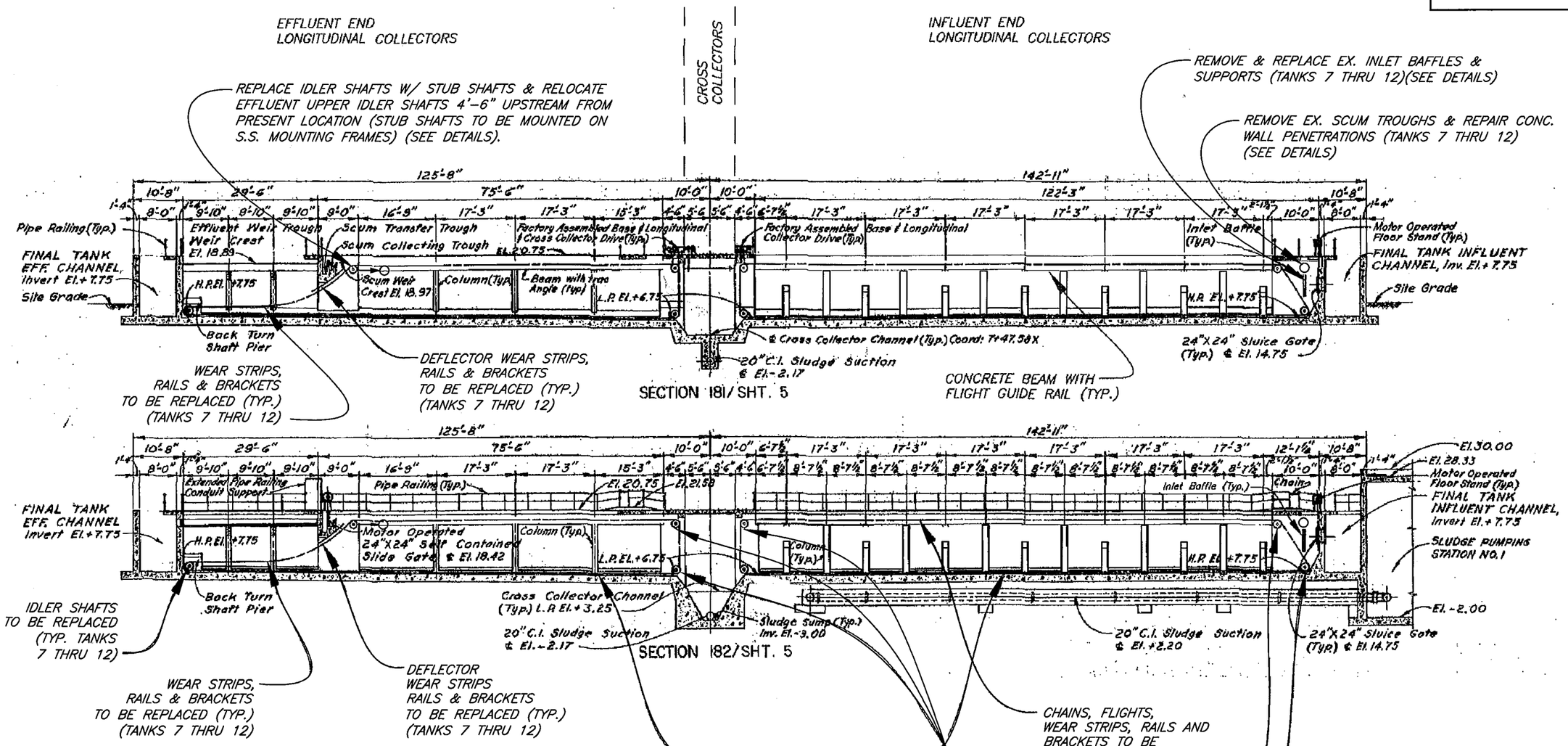

NOTES

1. LONGITUDINAL COLLECTORS WEAR WEAR STRIPS BE 10' IN LENGTH AND FASTENED TO RAIL AT 2.5' INCREMENTS (MAX.)

2. LONGITUDINAL COLLECTORS RETURN FLIGHT GUIDE RAILS SHALL BE 3/8"x 3"x 3" FIBERGLASS ANGLE AND SHALL BE PROVIDED IN 20-FOOT SECTIONS.

3. LONGITUDINAL COLLECTOR RETURN FLIGHT GUIDE RAILS SHALL BE SUPPORTED BY NYLON BRACKETS SET AT A MAXIMUM DISTANCE OF 10' ON-CENTERS. GUIDE RAIL TERMINATIONS SHALL BE STAGGERED FROM RAILS ON OPPOSITE SIDE OF BAY.

4. JOINTS IN GUIDE RAILS AND WEAR STRIPS SHALL BE STAGGERED FROM JOINTS ON OPPOSITE SIDE OF CHANNEL

SECTIONAL PART PLAN
N.T.S.

JACINTO CARLOS FERRAS, P.E., #49454 DESIGN DIVISION HEAD WASTEWATER DEPARTMENT	No. / DATE / REVISIONS 3 2 1	DES: JH DRN: JHJ CKD: JF DATE: 6/10/14	CITY of TAMPA WASTEWATER DEPARTMENT	FINAL SEDIMENTATION TANKS REHABILITATION PHASE 2 FINAL SEDIMENTATION TANK SECTIONS	W.O. 5971 SHEET 6

User: ss13 Drawing Name: K:\WW_Projects\2013\2013_5971_Final Sedimentation Tanks Rehabilitation Phase 2\DWG\FINAL SEDIMENTATION TANKS REHABILITATION PHASE 2.dwg
Layout: Jun 16, 2014 - 11:34am

TPB013-034

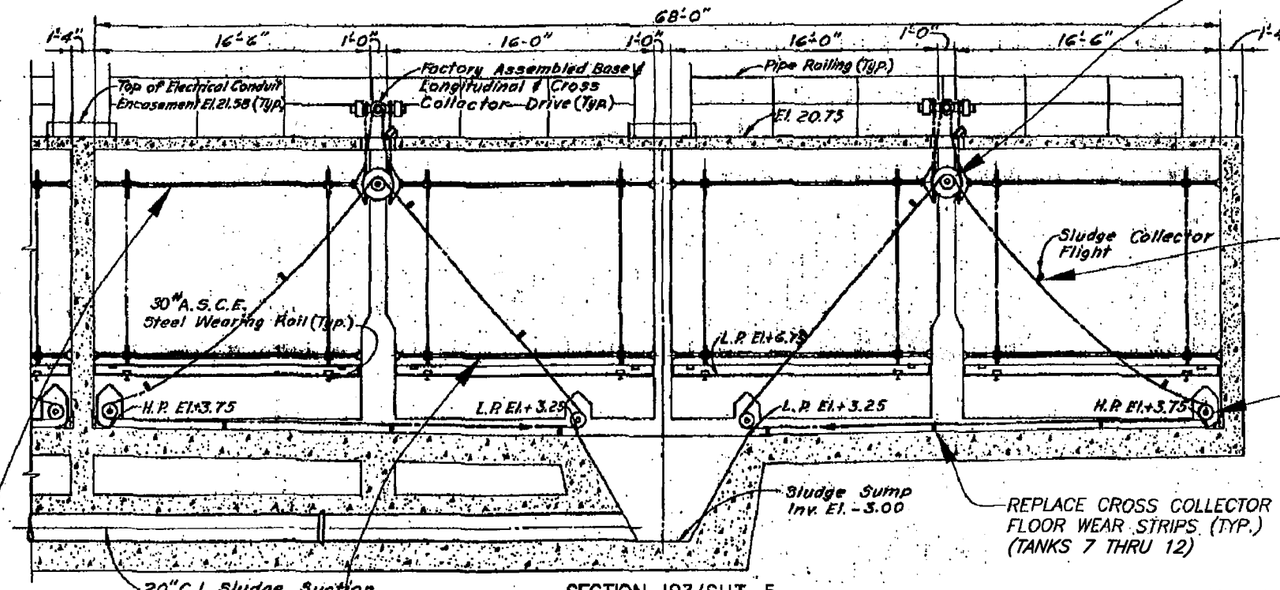

SECTION 183/SHT. 5

REPLACE CROSS COLLECTOR HEAD SHAFT, SPROCKETS. DRIVE CHAIN, FLIGHT CHAINS & FLIGHTS (TYP.) (TANKS 7 THRU 12)

CROSS COLLECTOR FLIGHTS WITH APPROX. 5-FEET SPACING (TYP.)

REPLACE EXISTING CROSS COLLECTOR IDLER SHAFTS & SPROCKETS W/ STUB SHAFTS & SPROCKETS (TYP.) (TANKS 7 THRU 12)

REPLACE CROSS COLLECTOR FLOOR WEAR STRIPS (TYP.) (TANKS 7 THRU 12)

EXISTING LONGITUDINAL HEAD SHAFT (& SPROCKETS), CHAINS & FLIGHTS TO BE REPLACED (TANKS 7 THRU 12)

REPLACE EXISTING LONGITUDINAL COLLECTOR IDLER SHAFTS AND SPROCKETS WITH STUB SHAFTS AND SPROCKETS (TYP. OF 3 SHAFTS PER COLLECTOR)

EXISTING CROSS COLLECTOR SHAFTS, CHAINS, FLIGHTS TO BE REPLACED (TYP.) (TANKS 7 THRU 12)

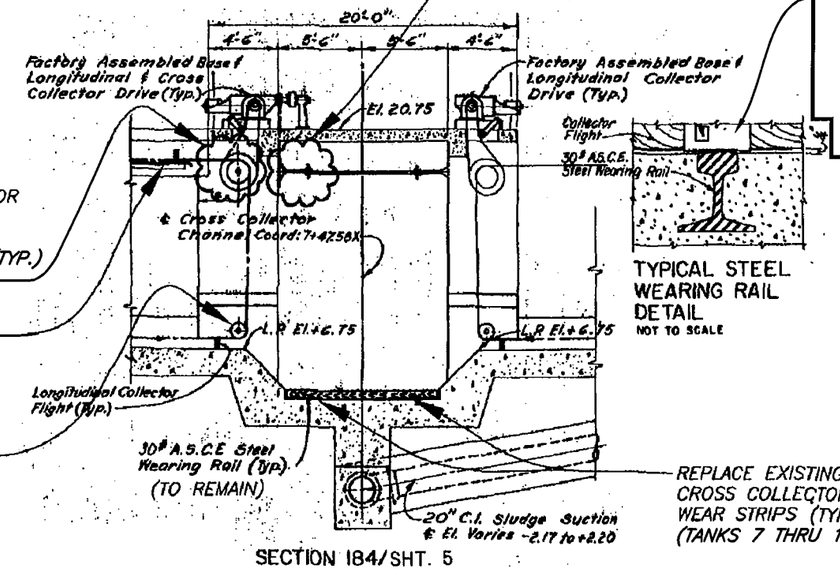

SECTION 184/SHT. 5

EX. STARBOARD WEAR-STRIP (PROP. WEAR STRIPS TO BE PLACED IN NEW LOCATION AWAY FROM EX. STEEL RAILS IN LONGITUDINAL AND CROSS COLLECTORS)

TYPICAL STEEL WEARING RAIL DETAIL
NOT TO SCALE

EXISTING LONGITUDINAL COLLECTOR HEAD SHAFT (& SPROCKETS), DRIVE CHAIN, FLIGHT CHAINS AND FLIGHTS TO BE REPLACED (TYP.) (TANKS 7 THRU 12)

LONGITUDINAL COLLECTOR WEAR STRIPS, FLIGHT GUIDE RAILS & SUPPORT BRACKETS TO BE REPLACED (TYP.) (TANKS 7 THRU 12)

REPLACE EXISTING LONGITUDINAL COLLECTOR IDLER SHAFTS & SPROCKETS WITH STUB SHAFTS & SPROCKETS (TYP.) (TANKS 7 THRU 12)

REPLACE EXISTING CROSS COLLECTOR WEAR STRIPS (TYP.) (TANKS 7 THRU 12)

JACINTO CARLOS FERRAS, P.E., #49454 DESIGN DIVISION HEAD WASTEWATER DEPARTMENT	No.	DATE	REVISIONS	DES: JH DRN: JHJ CKD: JF DATE: 6/10/14	CITY of TAMPA WASTEWATER DEPARTMENT	FINAL SEDIMENTATION TANKS REHABILITATION PHASE 2 SEDIMENTATION TANKS CROSS COLLECTOR SECTIONS	W.O. 5971 SHEET 7
	3						
	2						
	1						

User: ss13 Drawing Name: K:\WW_Projects\2013\2013_5971_Final Sedimentation Tanks Rehabilitation Phase 2\DWG\FINAL SEDIMENTATION TANKS REHABILITATION PHASE 2.dwg
Layout- Jun 16, 2014 - 11:34am

TPB013-035

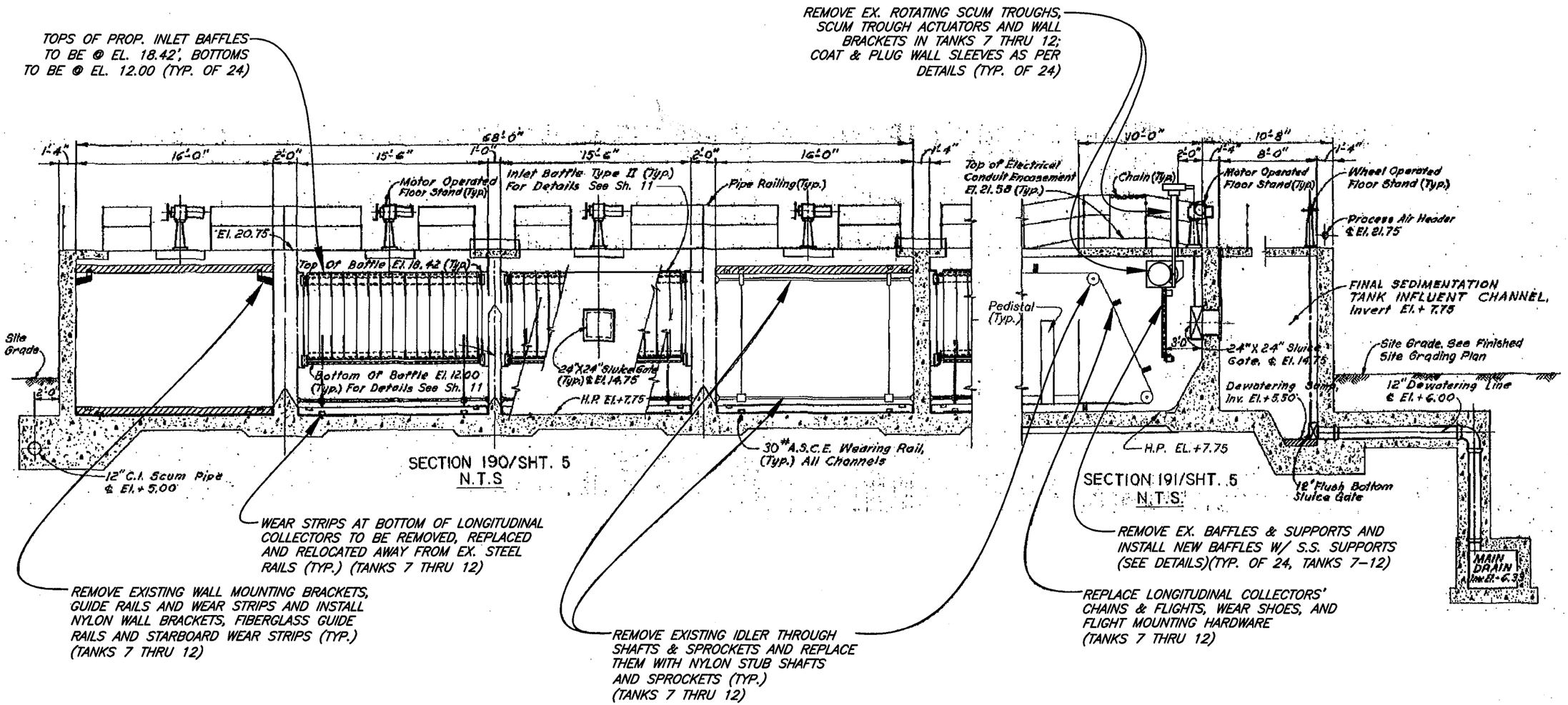

User: ss13 Drawing Name: K:\WW_Projects\2013\2013_5971_Final Sedimentation Tanks Rehabilitation Phase 2\DWG\FINAL SEDIMENTATION TANKS REHABILITATION PHASE 2.dwg
Layout– Jun 16, 2014 – 11:34am

JACINTO CARLOS FERRAS, P.E., #49454
DESIGN DIVISION HEAD
WASTEWATER DEPARTMENT

No.	DATE	REVISIONS
3		
2		
1		

DES: JH
DRN: JHJ
CKD: JF
DATE: 6/10/14

CITY of TAMPA
WASTEWATER DEPARTMENT

FINAL SEDIMENTATION TANKS REHABILITATION
PHASE 2
INFLUENT END LONGITUDINAL COLLECTOR SECTIONS

W.O. 5971
SHEET
8

TPB013-036

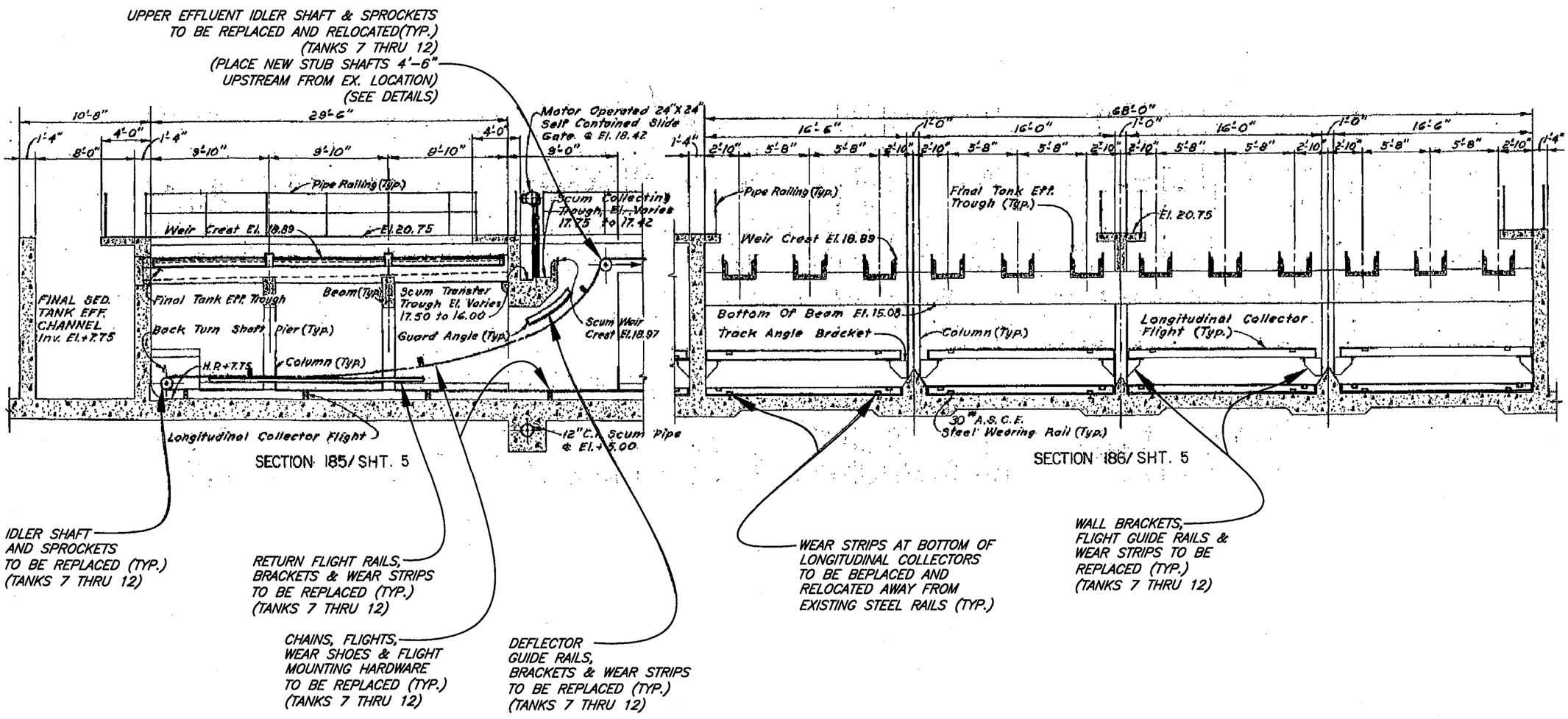

User: ss13 Drawing Name: K:\WW_Projects\2013\2013_5971_Final Sedimentation Tanks Rehabilitation Phase 2\DWG\FINAL SEDIMENTATION TANKS REHABILITATION PHASE 2.dwg
Layout– Jun 16, 2014 – 11:34am

JACINTO CARLOS FERRAS, P.E., #49454 DESIGN DIVISION HEAD WASTEWATER DEPARTMENT	No. / DATE / REVISIONS 3 2 1	DES: JH DRN: JHJ CKD: JF DATE: 6/10/14	CITY of TAMPA WASTEWATER DEPARTMENT	FINAL SEDIMENTATION TANKS REHABILITATION PHASE 2 EFFLUENT END LONGITUDINAL COLLECTOR SECTIONS	W.O. 5971 SHEET 9

TPB013-037

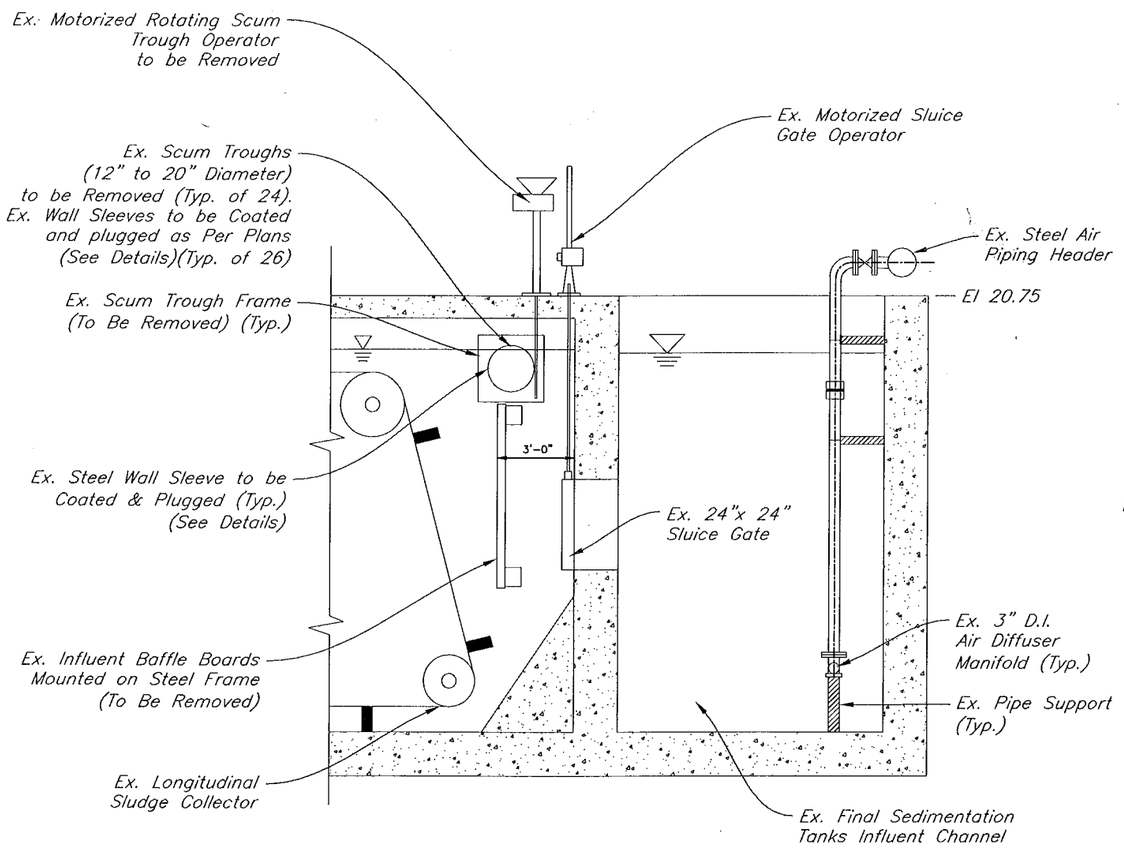

EXISTING INFLUENT END MODIFICATION DETAILS
N.T.S.

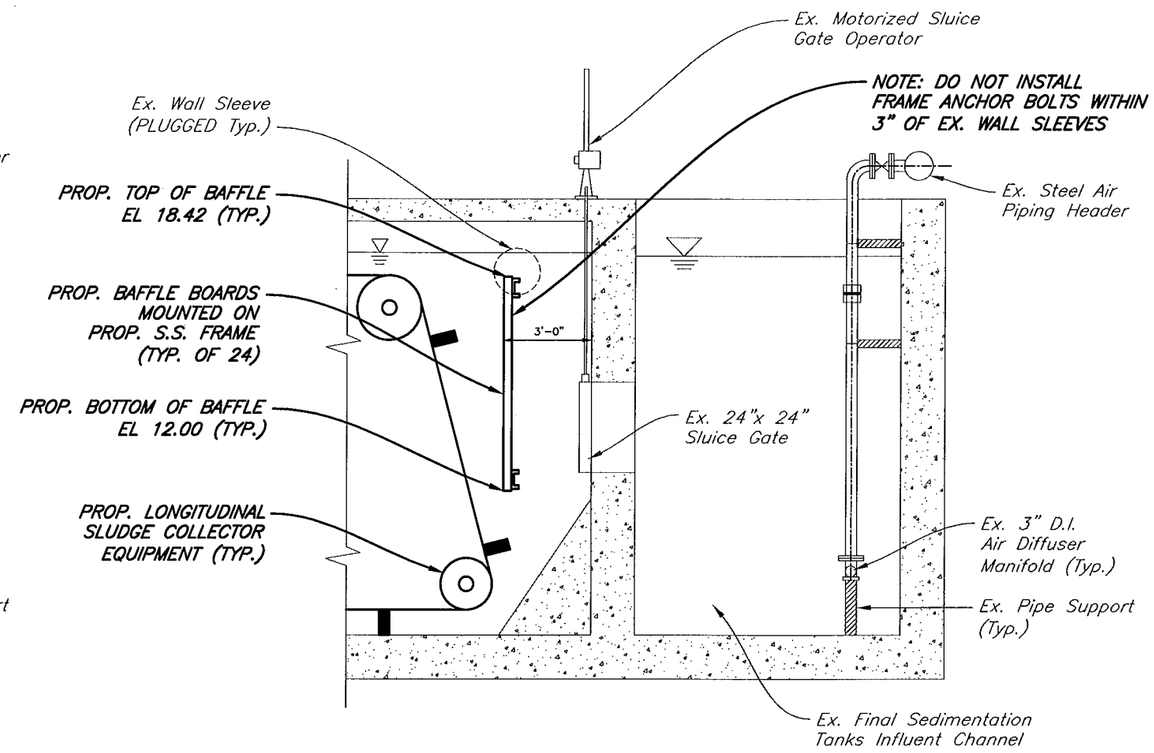

PROPOSED INFLUENT END MODIFICATION DETAILS
N.T.S.

JACINTO CARLOS FERRAS, P.E., #49454 DESIGN DIVISION HEAD WASTEWATER DEPARTMENT	No. / DATE / REVISIONS 3 2 1		DES: JH DRN: JHJ CKD: JF DATE: 6/10/14	CITY of TAMPA WASTEWATER DEPARTMENT	FINAL SEDIMENTATION TANKS REHABILITATION PHASE 2 INFLUENT END MODIFICATION DETAILS	W.O. 5971 SHEET 10

User: ss13 Drawing Name: K:\WW_Projects\2013\2013_5971_Final Sedimentation Tanks Rehabilitation Phase 2\DWG\FINAL SEDIMENTATION TANKS REHABILITATION PHASE 2.dwg
Layout- Jun 16, 2014 - 11:34am

TPB013-038

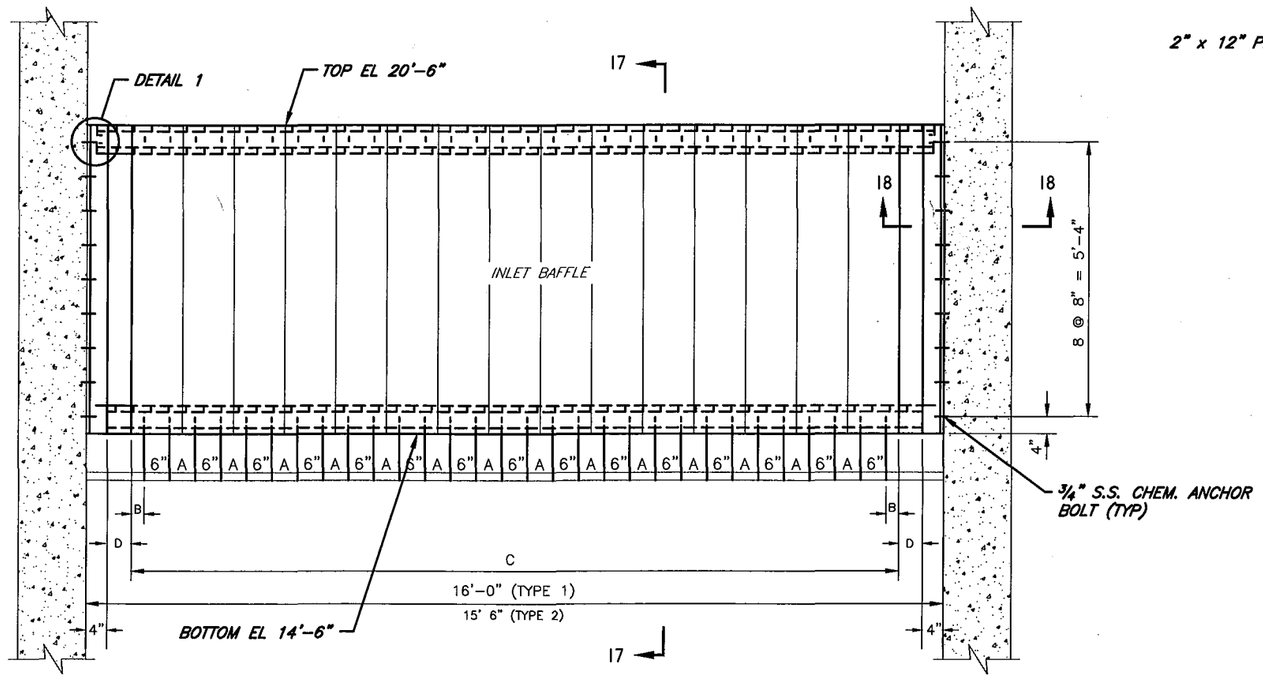

LUMBER \ DIMENSION	A	B	C_1	D_1	C_2	D_2
FIBERFORCE	5 1/4"	2 5/8"	15'-0"	2"	14'-0 3/4"	4 5/8"
UNTREATED	5 1/2"	2 3/4"	14'-4 1/2"	5 3/4"	14'-4 1/2"	2 3/4"

NOTE: PLANKS SHALL BE ALL UNTREATED WOOD LUMBER, OR FIBERFORCE® REINFORCED PLASTIC LUMBER (SEE SPECIFICATIONS)

INLET BAFFLE DETAILS

N.T.S.

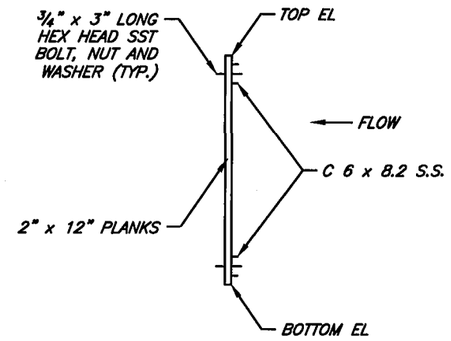

SECTION 17

N.T.S.

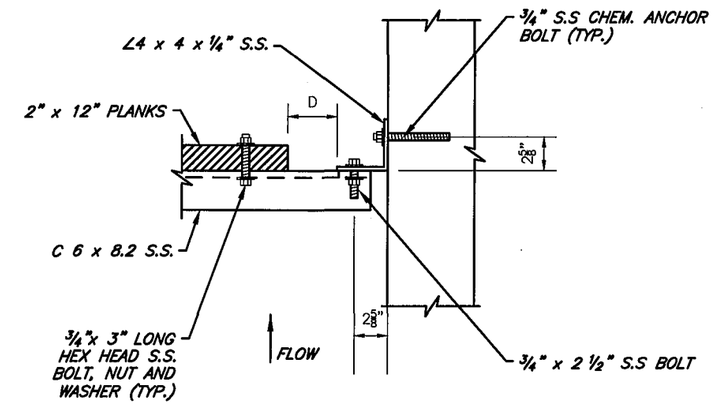

SECTION 18

N.T.S.

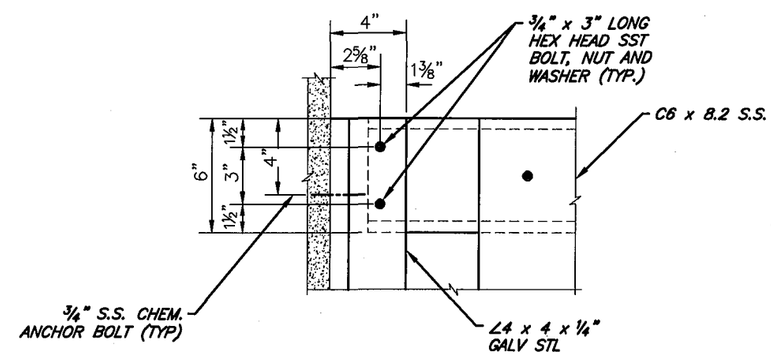

DETAIL 1

N.T.S.

NOTES:

1. CONTRACTOR SHALL CORE HOLES IN EXISTING CONCRETE WALLS FOR ALL PROPOSED CHEMICAL ANCHOR BOLTS (FOR BAFFLE SUPPORTS ONLY)

User: ss13 Drawing Name: K:\WW_Projects\2013\2013_597I_Final Sedimentation Tanks Rehabilitation Phase 2\DWG\FINAL SEDIMENTATION TANKS REHABILITATION PHASE 2.dwg
Layout– Jun 16, 2014 – 11:34am

JACINTO CARLOS FERRAS, P.E., #49454
DESIGN DIVISION HEAD
WASTEWATER DEPARTMENT

No.	DATE	REVISIONS
3		
2		
1		

DES: JH
DRN: JHJ
CKD: JF
DATE: 6/10/14

CITY of TAMPA
WASTEWATER DEPARTMENT

FINAL SEDIMENTATION TANKS REHABILITATION
PHASE 2
PROPOSED INLET BAFFLE & SUPPORT DETAILS

W.O. 5971
SHEET
11

TPB013-039

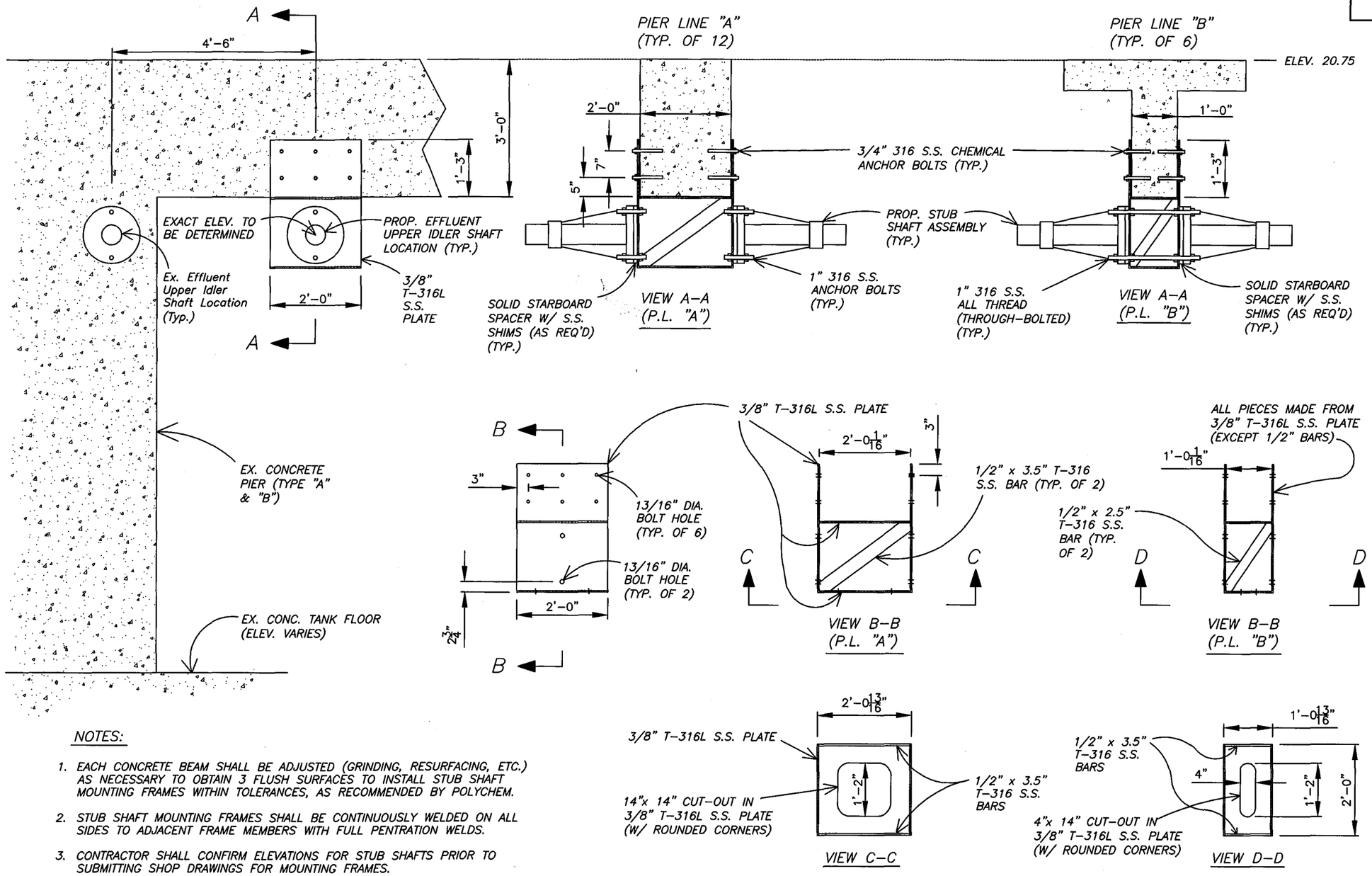

NOTES:

1. EACH CONCRETE BEAM SHALL BE ADJUSTED (GRINDING, RESURFACING, ETC.) AS NECESSARY TO OBTAIN 3 FLUSH SURFACES TO INSTALL STUB SHAFT MOUNTING FRAMES WITHIN TOLERANCES, AS RECOMMENDED BY POLYCHEM.
2. STUB SHAFT MOUNTING FRAMES SHALL BE CONTINUOUSLY WELDED ON ALL SIDES TO ADJACENT FRAME MEMBERS WITH FULL PENTRATION WELDS.
3. CONTRACTOR SHALL CONFIRM ELEVATIONS FOR STUB SHAFTS PRIOR TO SUBMITTING SHOP DRAWINGS FOR MOUNTING FRAMES.

(NOT TO SCALE)

JACINTO CARLOS FERRAS, P.E., #49454 DESIGN DIVISION HEAD WASTEWATER DEPARTMENT	No. / DATE / REVISIONS 3 2 1	DES: JH DRN: JHJ CKD: JF DATE: 6/10/14	CITY of TAMPA WASTEWATER DEPARTMENT	FINAL SEDIMENTATION TANKS REHABILITATION PHASE 2 PROPOSED EFFLUENT UPPER IDLER SHAFT MOUNTING FRAMES	W.O. 5971 SHEET 12

User: ss13 Drawing Name: K:\WW_Projects\2013\2013_5971_Final Sedimentation Tanks Rehabilitation Phase 2\DWG\FINAL SEDIMENTATION TANKS REHABILITATION PHASE 2.dwg
Layout– Jun 16, 2014 – 11:34am

TANK #12

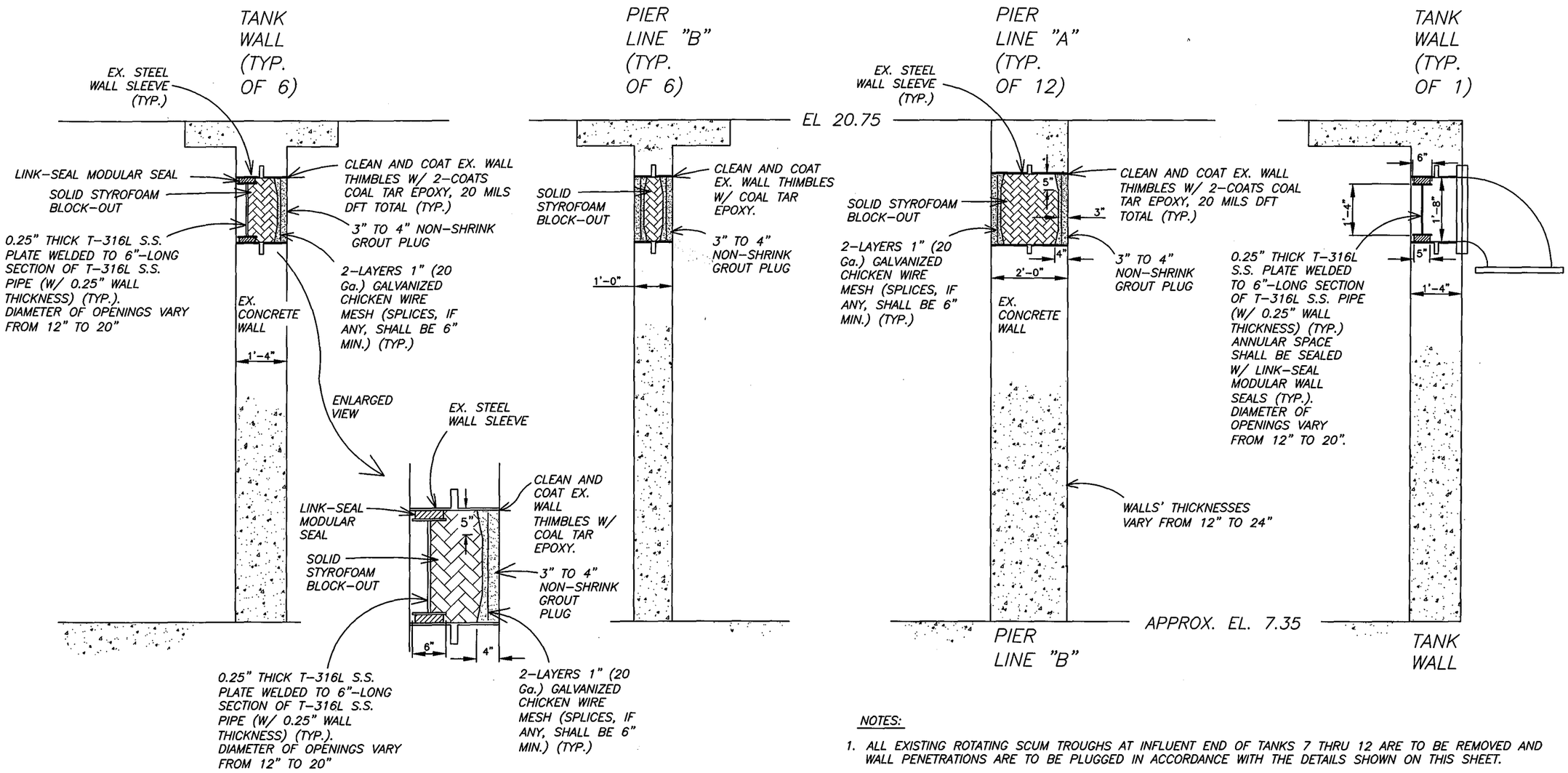

NOTES:

1. ALL EXISTING ROTATING SCUM TROUGHS AT INFLUENT END OF TANKS 7 THRU 12 ARE TO BE REMOVED AND WALL PENETRATIONS ARE TO BE PLUGGED IN ACCORDANCE WITH THE DETAILS SHOWN ON THIS SHEET.
2. THE PARTIAL SECTIONS ABOVE REFLECT WORK TO BE DONE AT THE EXISTING SCUM TROUGH LOCATIONS IN TANKS 7 THRU 12. OPENING DIAMETERS AND CENTERLINE ELVEVATIONS CHANGE THROUGHOUT PROJECT.

PROPOSED WALL MODIFICATIONS @ INFLUENT ENDS OF TANKS

NOT TO SCALE

JACINTO CARLOS FERRAS, P.E., #49454
DESIGN DIVISION HEAD
WASTEWATER DEPARTMENT

No.	DATE	REVISIONS
3		
2		
1		

DES: JH
DRN: JHJ
CKD: JF
DATE: 6/10/14

CITY of TAMPA
WASTEWATER DEPARTMENT

FINAL SEDIMENTATION TANKS REHABILITATION PHASE 2
PROPOSED PARTIAL SECTIONS
PROPOSED WALL MODIFICATIONS @ INFLUENT ENDS OF TANKS

W.O. 5971
SHEET 13

User: ss13 Drawing Name: K:\WW_Projects\2013\2013_5971_Final Sedimentation Tanks Rehabilitation Phase 2\DWG\FINAL SEDIMENTATION TANKS REHABILITATION PHASE 2.dwg
Layout- Jun 16, 2014 - 11:34am