The Enclosed Document Is Provided For Your Convenience.

Please Email ALL Questions:

MailTo:ContractAdministration@TampaGov.net

Please Let Us Know If You Plan To Bid

City of Tampa
Contract Administration Department
306 E. Jackson St. #280A4N
Tampa, FL 33602
(813)274-8456

WAYNE C. PAPY CENTER ADDITION AND RENOVATION

PLOT DATE : PLOT_DATE

CONSULTANTS

CIVIL
MILLS AND ASSOCIATES, INC.
3242 HENDERSON BLVD. STE. 300
TAMPA, FLORIDA 33609
(813) 876-5869

STRUCTURAL
BROADWAY ENGINEERING
1335 W. CASS ST.
TAMPA, FLORIDA 33606
(813) 251-9244 FAX. (813) 251-9330

MECHANICAL, ELECTRICAL, PLUMBING
HALL ENGINEERING GROUP
14499 N. DALE MABRY HWY #179
TAMPA, FLORIDA 33618
(813) 374-2121

ABBREVIATIONS

AFF	above finished floor	INSUL	insulate (d), (ion)
ADJT	adjustable	JT	joint
A/C	air conditioning	JST	joist
ALT	alternate	LAV	lavatory
AB	anchor bolt	LTL	lintel
BM	beam	MH	manhole
BIT	bituminous	MO	masonry opening
BLKG	blocking	MECH	mechanical
BUR	built up roofing	MET	metal
CIPC	cast-in-place concrete	MOD	modular
CLG	ceiling	NOM	nominal
CT	ceramic tile	NIC	not in contract
CLR	clearance	NTS	not to scale
COL	column	PLAS	plaster
CON	concrete	PT	pressure
CMT	ceramic mosaic tile	PVC	polyvinyl chloride
CMU	concrete masonry unit	PTC	post-tension concrete
CONT	continuous or continue	PCF	pounds per cubic feet
CJT	control joint	PFL	pounds per linesl foot
DP	dampproofing	PSF	pounds per square foot
DL	dead load	PSI	pounds per square inch
DET	detail	PCC	precast concrete
DIA	diameter	PL	property line
DIM	dimension	RAD	radius
DR	door	RVT	reinforced vinyl title
DS	downspout	REF	reference
DWG	drawing	RA	return air
DF	drinking fountain	RD	roof drain
ELEC	electrical	RFG	roofing
EWC	electrical water cooler	RO	rough opening
EL	elevation	SS	service sink
EQ	equal	SIM	similar
EXIST	existing	SC	solid core
EXPJT	expansion joint	SPEC	specification(s)
EXT	exterior	SQ	square
FFE	finished floor elevation	SS	stainless steel
FFL	finished floor line	STL	steel
FLG	flashing	STR	structural
FLR	flooring	TBR	to be removed
FD	floor drain	TEL	telephone
FTG	footing	THK	thick(ness)
FOB	furnished by others	T&G	tongue & groove
GA	gage, gauge	UNO	unless noted otherwise
GALV	galvanized	VB	vapor barrier
GC	general contractor	VERT	vertical
GL	glass, glazing	VAT	vinyl asbestos title
GB	grab bar	VB	vinyl base
GYPDWL	gypsum dry wall	WC	water closet
HH	handhole	WH	water heater
HDW	hardware	WP	water proofing
HT	height	WD	wood
HC	hollow core		
HB	hose bibb		

SCOPE OF WORK EXISTING

FLORIDA BUILDING CODE - EXISTING BUILDING
CHAPTER 4 - CLASSIFICATION OF WORK,
SECTION 404 ALTERATION - LEVEL 2.
LEVEL 2 ALTERATIONS INCLUDE THE,
RECONFIGURATION OF SPACE,THE ADDITION OR
ELIMINATION OF ANY SYSTEM OR THE
INSTALLATION OF ANY ADDITIONAL EQUIPMENT.

SYMBOLS

a — mark, or type
WINDOW TYPE

105 — number
ROOM NUMBER

15 — item number
RESTROOM ACCESSORY

15 — note number
DRAWING NOTE

100 — mark, or type
DOOR NUMBER

1 / A-5 — section mark / sheet number
SECTION CUT

A / A-7 — elevation mark / sheet number
ELEVATION

A B C D / A-15 — elevation mark / sheet number
MULTI-ELEVATION

a — view mark (on same sheet)
VIEW

1 / A-2 — mark / sheet number; FLOOR PLAN; SCALE: 1/8"=1'-0"; drawing type; scale; north arrow; N
DESCRIPTIVE TITLE

room title: KITCHEN
109 — room number
ROOM TITLE

1 / A-2 — mark / sheet number
DETAIL

PROJECT NOTES

1 ALL CONSTRUCTION SHALL COMPLY WITH APPLICABLE CODES AND STANDARDS, INCLUDING BUT NOT LIMITED TO ALL STATE LAWS, LOCAL ORDINANCES, UTILITY COMPANY, FLORIDA ACCESSIBILITY CODE FOR BUILDING CONSTRUCTION, THE STANDARD MECHANICAL CODE, THE STANDARD PLUMBING CODE, THE OCCUPATIONAL SAFETY AND HEALTH ACT, NFPA AND THE CURRENTLY ADOPTED STANDARD BUILDING CODE.

2 CONTRACTOR SHALL REMOVE ALL DEBRIS FROM THE PROJECT SITE AS REQUIRED TO MAINTAIN A SAFE AND ORDERLY WORK ENVIRONMENT.

3 GENERAL CONTRACTOR SHALL VERIFY ALL DIMENSIONS AND EXISTING CONDITIONS PRIOR TO AND DURING CONSTRUCTION.

4 DEMOLITION WORK SHALL NOT BE LIMITED TO THESE DOCUMENTS TO COMPLETE PROJECT AS ILLUSTRATED, REMOVE ITEMS NECESSARY TO ALLOW FOR NEW CONSTRUCTION.

5 EXISTING SURFACES (FLOOR WALLS, CEILINGS, AND FACILITIES / AMENITIES.) SHALL BE PROTECTED DURING CONSTRUCTION. THE CONTRACTOR SHALL CLEAN SURFACES AFTER CONSTRUCTION. REPAIR, PAINT AND OR REPLACE AREAS DAMAGED AS A RESULT OF PERFORMANCE OF THE WORK.

6 ALL WORK SHALL BE COORDINATED WITH THE CITY OF TAMPA'S ARCHITECTURAL REPRESENTATIVE.

7 THE CONTRACTOR SHALL SECURE ALL OPENINGS UNDER CONSTRUCTION AT THE END OF EACH WORKING DAY.

8 ITEMS OR AREAS DAMAGED BY THE CONTRACTOR OR SUBCONTRACTORS SHALL BE REPAIRED OR REPLACED AT THE CONTRACTOR'S EXPENSE.

9 PRIOR TO WORK CONTRACTOR SHALL LOCATE EXISTING UTILITIES IN AREAS, TO BE DISTURBED AND AVOID DAMAGING. SEE NOTE 8, FOR REPAIR REQUIREMENTS.

BUILDING TYPE: IV-U

FIRM NOTE
SEE PLANS

FLOOD ZONE C

CODE REFERENCE NOTE
ALL CONSTRUCTION SHALL COMPLY WITH CURRENTLY ADOPTED CODES, WHICH INCLUDE BUT ARE NOT LIMITED TO:

CHAPTER 11	*TAMPA CITY CODE, WHICH INCLUDES:* TAMPA CITY CODE, WHICH INCLUDES: NATIONAL FIRE PROTECTION ASSOCIATION CODES, LATEST ADOPTED EDITION. STANDARD FIRE PREVENTION CODE, LATEST ADOPTED EDITION. NFPA #101 LIFE SAFETY CODE, LATEST ADOPTED EDITION.
CHAPTER 5	*TAMPA CITY CODE, WHICH INCLUDES:* FLORIDA BUILDING CODE, 2010 WITH 2009 SUPPLEMENTS FBC MECHANICAL CODE, 2010 WITH 2009 SUPPLEMENTS NFPA #70, NATIONAL ELECTRICAL CODE, LATEST ADOPTED EDITION.
FLORIDA STATUE 633	*WHICH INCLUDES:* STATE FIRE MARSHALL'S RULES AND REGULATIONS.

ARCHITECT

THOMAS A. HESTER SR, AIA
AR0091745
306 E. JACKSON ST. - 4N
TAMPA, FL 33602
PHONE (813) 274-8442 / FAX (813) 274-8080
EMAIL : THOMAS.HESTER@TAMPAGOV.NET

INDEX

G-0.1 COVER SHEET / GENERAL INFORMATION

CIVIL
C-10 SITE DEMOLITION PLAN & CIVIL SITE PLAN

STRUCTURAL
S-1 FOUNDATION PLAN
S-2 FRAMING ELEVATIONS
S-3 FRAMING DETAILS
S-4 ROOF FRAMING PLAN
S-5 GENERAL NOTES

ARCHITECTURAL
A-2.1 DEMOLITION FLOOR PLAN
A-2.2 INFORMATION FLOOR PLAN
A-3.1 ROOF PLANS / DETAILS
A-3.2 ROOF DETAILS
A-4.1 REFLECTED CEILING PLAN / PARTITION TYPES
A-5.1 EXTERIOR ELEVATIONS
A-6.1 BUILDING SECTIONS
A-6.2 DETAILS
A-6.3 DETAILS
A-6.4 DETAILS
A-7.1 ENLARGED FLOOR PLANS
A-7.2 INTERIOR ELEVATIONS DOOR / FRAME / STORE FRONT ELEVATIONS
A-8.1 SCHEDULES
A-10.1 MILLWORK

MECH./ PLUMB. / ELEC.
M10 MECHANICAL NOTES , LEGEND & SCHEDULE
M1.1 HVAC PLANS
M5.1 HVAC DETAIL
M5.2 HVAC DETAIL
P10 PLUMBING NOTES / SCHEDULES / DEMOLITION FLOOR PLAN
P1.1 PLUMBING PLANS RISER DIAGRAMS
P5.1 PLUMBING DETAILS
E10 ELECTRICAL SPECIFICATIONS & LEGEND
E2.1 ELECTRICAL DEMOLITION PLAN
E3.1 LIGHTING PLANS
E3.2 POWER PLANS
E4.1 SCHEDULES AND POWER ONE - LINE DIAGRAM

LOCATION MAP

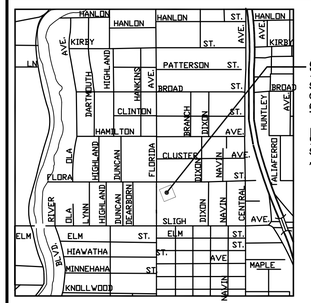

SITE LOCATION
SEMINOLE HEIGHTS COMMUNITY CENTER
6925 NORTH FLORIDA AVE.
TAMPA, FLORIDA 33603

LEGAL DESCRIPTION
SEC25-T28-R18
ATLAS SHEET D-12

NORTH

LEGAL DESCRIPTION
SEC25, T28, R18
ATLAS SHEET No. D-12

SQUARE FOOTAGE
SQUARE FEET

SHEET NUMBER
G - 1
2 OF ___

PLOT DATE : PLOT_DATE

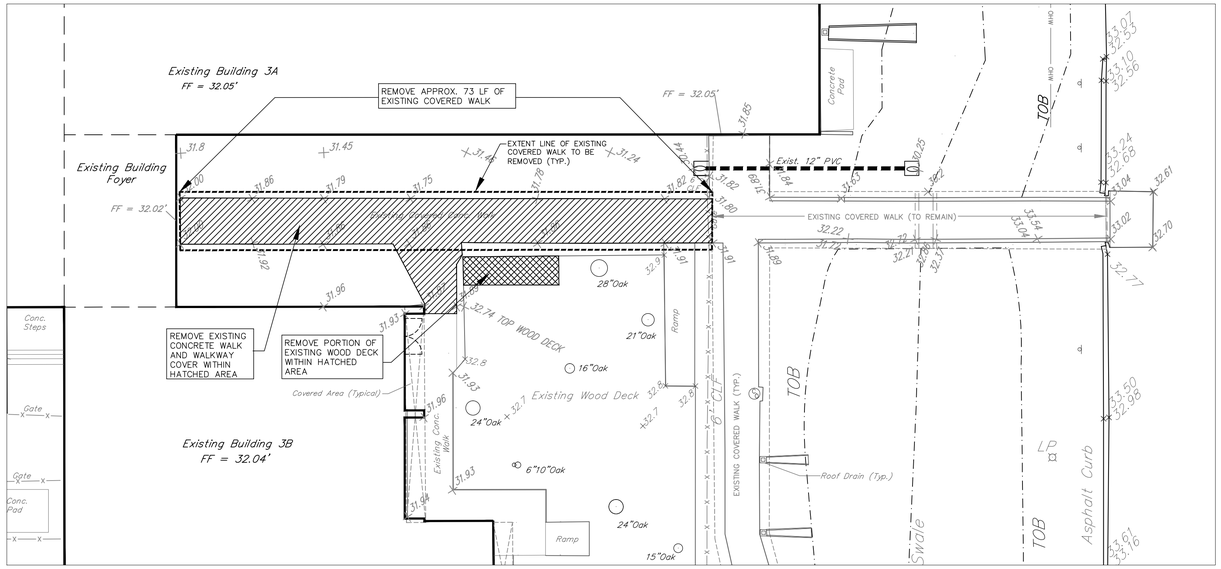

NORTH

DEMOLITION PLAN
SCALE 1" = 10'

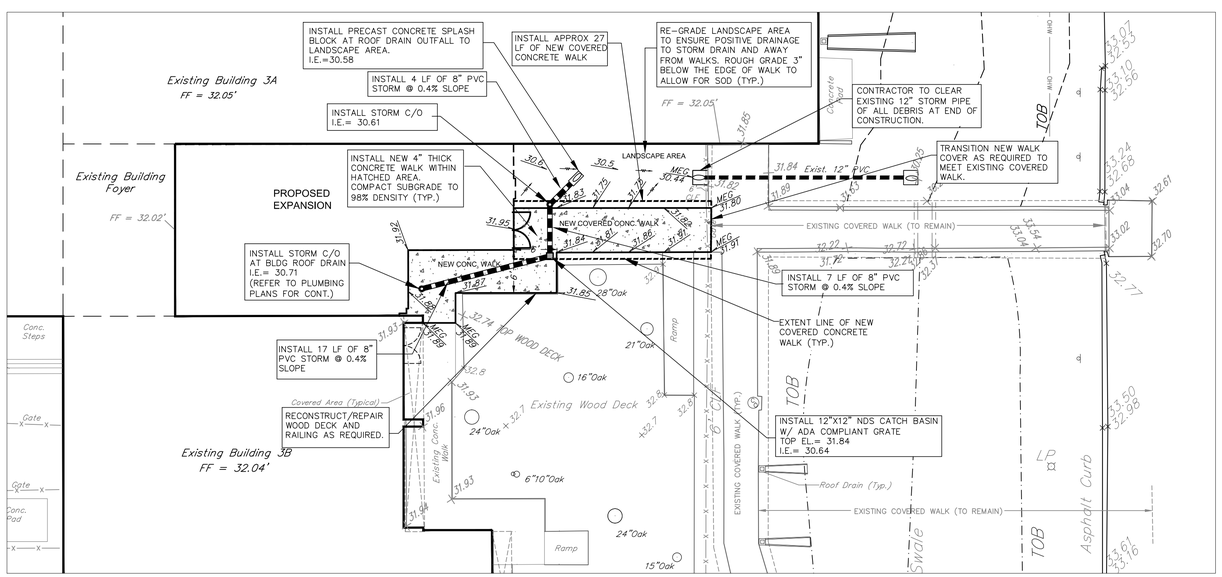

NORTH

SITE PLAN
SCALE 1" = 10'

GENERAL NOTES:

1. All work shall comply with the regulations, requirements and ordinances of the various governing agencies having jurisdiction over said work, including, and not limited to: Hillsborough County, City of Tampa, F.D.E.P., S.W.F.W.M.D., and F.D.O.T. and others as may be applicable.

2. Contractor is responsible for compliance, permitting and inspections of all underground site piping, appurtenances, etc. with the local Plumbing Code and Plumbing Department, as applicable.

3. It is the responsibility of the Contractor to initiate inspections and testing as coordinated with governing agencies and utilities, notify Engineer-of-Record upon completion of said site utility installation and provide as-built information. Property Owner to execute operation and maintenance forms as provided by Engineer. Failure to comply with the above may result in agency fines that the Engineer-of-Record will not be responsible for.

4. The Contractor shall maintain copies of all applicable permits on-site and shall be responsible to adhere to all permit conditions during construction.

5. Location, dimension, elevation, and identification of existing utilities, structures and other topographic features are approximate only, according to the best information available at the time of preparation of these plans. There may be additional existing details on-site and off-site, the presence of which is not known or detected at this time. Engineer/Surveyor shall not be held responsible for undetected underground utilities. Prior to construction, it is the Contractor's responsibility to verify the location, dimension, elevation and identification of all utilities, structures and topographic features (i.e. buildings, sidewalks, canopy supports, fences, pavement, underground utilities, utility poles/guy wires, manholes, inlets, a/c units, trees, landscaping, etc.). If any of the existing or proposed conditions either: a) conflict with the proposed improvements, or b) are not shown or shown incorrectly on the plans, it is the Contractor's responsibility to contact the Engineer prior to the commencing any work activities.

6. The construction testing/inspection shall be the Contractor's responsibility to schedule and complete any and all tests as required with all site civil improvements constructed on and off site. It shall also be the Contractor's responsibility to pre-test these improvements prior to giving the Engineer-of-Record any governing agency field representative 48 hours advance notice of any formal tests.

7. Engineer/Surveyor shall not be held responsible for undetected underground utilities and/or soil conditions Site preparation to be in accordance with a geotechnical engineers recommendations and as a minimum standard must confront with the following: a) Unsuitable material to be removed upon Engineers approval; b) Fill material to be clean with no organics, muck, clay, trash, etc.; c) Fill to be placed in 12" lifts and compacted to 98% modified proctor; d) 4:1 maximum slope unless noted otherwise

8. Location of existing utilities are approximate as shown on plans and it is the Contractor's responsibility to determine the exact locations of the utilities prior to construction in their vicinity.

9. The Contractor to coordinate sanitary sewer, water and storm roof drain building connections with Plumbing, Structural and Architectural plans.

10. The Contractor shall notify the appropriate governing agencies and/or utilities prior to commencing work within their jurisdiction(s).

11. The Contractor shall notify all utility companies with facilities in the area of the project before beginning construction, as required.

12. Florida Statute 553.851 (1979) requires a minimum of 2 days and maximum of 5 days notice before excavation. Effective December 1, 1993, a new telephone number, SUNSHINE STATE ONE CALL OF FLORIDA, 1-800-432-4770 must be called for underground utility location purposes before you dig.

13. Contractor to maintain positive stormwater drainage and flood control during construction.

14. The Contractor shall use appropriate measures to prevent erosion and transport of sediment to surface drains. The Contractor shall use hay bales and/or silt barriers to mitigate adverse impacts to existing surface water quality.

15. Any relocation or modification of proposed storm sewer system shall not be made without the approval of the Engineer-of-Record

16. All pipe lengths are plus or minus and are measured from center of fittings and/or structures.

17. Upon completion of the work, all surfaces and facilities will be returned to a minimum standard of profile and condition as existed prior to commencement of work.

18. Mills & Associates, Inc. makes no representations or guarantees pertaining to easements, rights of way, set back lines, reservations, agreements and other similar matters.

19. Contractor to coordinate scheduling of existing site lighting demolition and proposed site lighting installation with Tampa Electric Company.

20. Contractor to temporarily support all existing adjacent utilities/structures during pipeline/excavation work. Contact local utility for temporary securing of power poles, as necessary. Alignment may vary due to field conditions, contact Engineer. Prior to backfill of pipe trench, contact Engineer.

21. The Contractor shall check plans for conflicts and discrepancies prior to construction. The Contractor shall notify the owner's Engineer of any conflict before performing any work in the affected area.

22. The Contractor is responsible for repairing any damage to existing facilities, above or below ground, that may occur as a result of the work performed by the Contractor called for in this contract.

23. SAFETY:
    A. During the construction and/or maintenance of this project, all safety regulations are to be enforced. The Contractor or his representative shall be responsible for the control and safety of the traveling public and the safety of his personnel.
    B. Labor safety regulations shall conform to the provisions set forth by OSHA in the Federal Register of the Department of Transportation.
    C. The minimum standards as set forth in the current edition of "The State of Florida, Manual on Traffic Control and Safe Practices for Street and Highway Construction, Maintenance and Utility Operations" shall be followed in the design application, installation, maintenance and removal of all traffic control devices, warning devices and barriers necessary to protect the public and workmen from hazards within the project limits
    D. All traffic control markings and devices shall conform to the provisions set forth in the manual on uniform traffic control devices prepared by the U.S. Department of Transportation Federal Highway Administration

It shall be the sole responsibility of the Contractor to comply and enforce all applicable safety regulations. The above information has been provided for the Contractor's information only and does not imply the Owner or Engineer will inspect and/or enforce safety regulations.

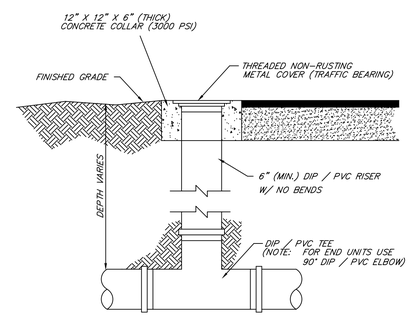

NOTES:

1. CLEANOUT MATERIAL SPECIFICATION:
   IF PIPELINE MATERIAL IS DIP, USE CLASS 51 DIP
   IF PIPELINE MATERIAL IS PVC, USE SCHEDULE 40 PVC

TWO-WAY CLEANOUT
N.T.S.

GENERAL NOTES

KEY NOTES

LEGEND (As Applicable):

BC	Back of Curb
CPP	Corrugated Plastic Pipe
EP	Edge of Pavement
IE	Invert Elevation
L.P.	Light Pole
(M)	Measured
MEG	Match Existing Grade
PVC	Polyvinylchloride (pipe)
(R)	Reported
App.	Approximately
TOB	Top of Bank
	Roof Drain
	Existing Tree
31.65	Proposed Grade
x 31.77	Existing Grade
	Concrete Walk to be Removed
	Wood Deck to be Removed
	New Concrete Walk

CITY OF TAMPA
CONTRACT ADMINISTRATION DEPARTMENT
PLANNING AND DESIGN DIVISION
306 E. JACKSON STREET 4 NORTH
TAMPA, FLORIDA 33602
p: 813. 274. 8456 - f: 813. 274. 80
url: www.tampagov.net

James E. Jackson, Jr. AIA, NOMA
City Architect
Edward D. Rice, AIA
Project Architect
Kevin L. Henika, AIA
Project Architect
Thomas A. Hester, Sr., AIA, NOMA
Project Architect
David R. Pagitt
Supervisor, Architectural Drafting
Kinsey C. Tillman
Drafting Technician
Jerry P. Sanders
Drafting Technician
Byron K. Thomas, LEED AP
Drafting Technician

MEP CONSULTANT
HALL ENGINEERING GROUP
14499 N. DALE MABRY HWY #
TAMPA, FLORIDA 33618
(813) 374-2121

STRUCTURAL CONSULTAN
BROADWAY ENGINEERING
1335 W. CASS ST.
TAMPA, FLORIDA 33606
(813) 251-9244 FAX. (813) 2

CIVIL CONSULTANT
MILLS AND ASSOCIATES, INC.
3242 HENDERSON BOULEVARD
SUITE 300
TAMPA, FLORIDA 33609
(813) 876-5869

LANDSCAPE CONSULTANT

WAYNE C. PAPY CENTER
ADA IMPROVEMENTS
6925 NORTH FLORIDA AVENUE
TAMPA, FLORIDA 33604

DPW FILE NUMBER
X

DPW NUMBER
X

ISSUE DATE
May 2015

DRAWN BY
CVM

REVISIONS

SEAL

SCALE: 1" = 10'

SITE DEMOLITION & CIVIL SITE PLAN

SHEET NUMBER
C-1.0

X OF X

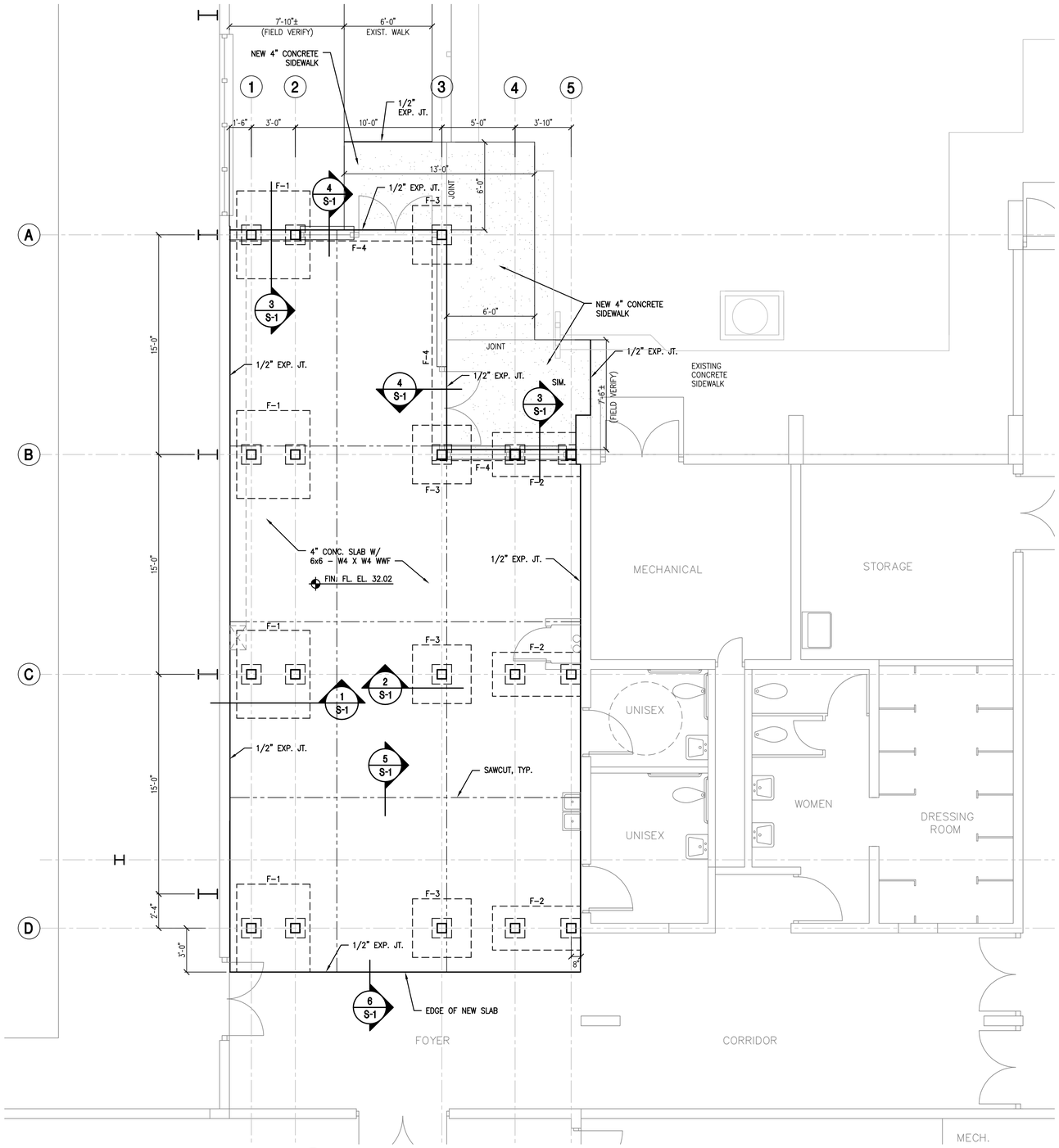

FOUNDATION PLAN

SCALE: 1/4" = 1'-0"

FOOTING SCHEDULE			
NO.	SIZE	REINFORCEMENT	REMARKS
F-1	6'-0" X 5'-0" X 2'-0"	(5) #5 TRANSV., TOP & BOT. (5) #5 LONG., TOP & BOT.	16" X 16" X 10" COL. PEDESTAL
F-2	6'-0" X 3'-0" X 2'-0"	(5) #5 TRANSV., TOP & BOT. (3) #5 LONG., TOP & BOT.	16" X 16" X 10" COL. PEDESTAL
F-3	4'-0" X 4'-0" X 2'-0"	(4) #5 E.W., TOP & BOT.	16" X 16" X 10" COL. PEDESTAL
F-4	1'-0" X 1'-6" X CONT.	(2) #5 CONT.	EDGE FOOTING

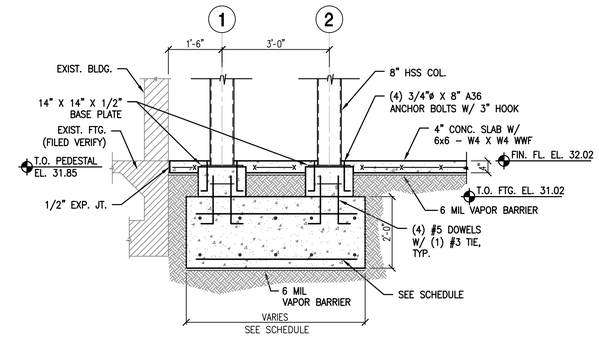

1 / S-1 INTERIOR COLUMN FOOTING (F-1, F-2 SIM.)

SCALE: 1/2" = 1'-0"

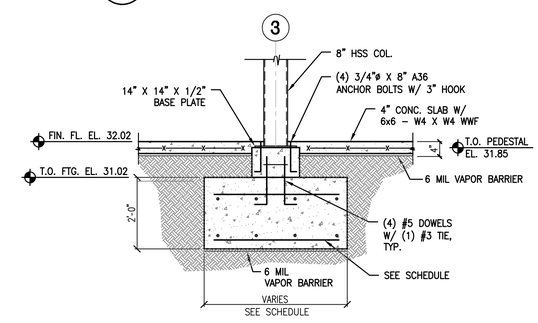

1 / S-1 INTERIOR COLUMN FOOTING (F-3)

SCALE: 1/2" = 1'-0"

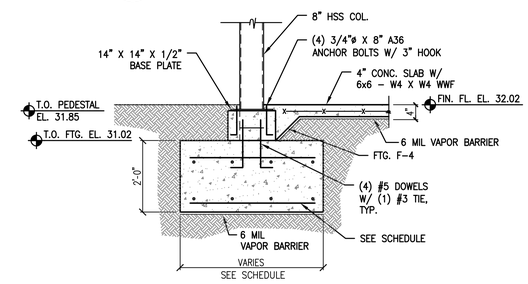

3 / S-1 FOOTING SECTION

SCALE: 1/2" = 1'-0"

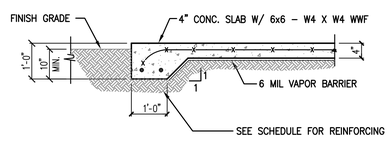

4 / S-3 EDGE FOOTING (F-4)

SCALE: 1/2"=1'-0"

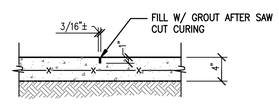

5 / S-1 SAW CUT CONTROL JOINT

NTS

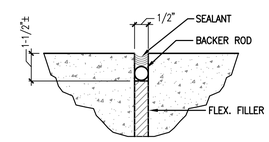

6 / S-1 SEALED EXPANSION JOINTS

SCALE: N.T.S.

GENERAL NOTES

KEY NOTES

CITY OF TAMPA
CONTRACT ADMINISTRATION DEPARTMENT
PLANNING AND DESIGN DIVISION
306 E. JACKSON STREET 4 NORTH
TAMPA, FLORIDA 33602
p: 813. 274. 8456 – f: 813. 274. 8080
url: www.tampagov.net

James E. Jackson, Jr. AIA, NOMA
City Architect
Edward D. Rice, AIA
Project Architect
Kevin L. Henika, AIA
Project Architect
Thomas A. Hester, Sr., AIA, NOMA
Project Architect
David R. Pagitt
Supervisor, Architectural Drafting
Kinsey C. Tillman
Drafting Technician
Jerry P. Sanders
Drafting Technician
Byron K. Thomas, LEED AP
Drafting Technician

MEP CONSULTANT
HALL ENGINEERING GROUP
14499 N. DALE MABRY HWY #179
TAMPA, FLORIDA 33618
(813) 374–2121

STRUCTURAL CONSULTANT
BROADWAY ENGINEERING
1335 W. CASS ST.
TAMPA, FLORIDA 33606
(813) 251–9244
FAX. (813) 251–9330

CIVIL CONSULTANT
MILLS AND ASSOCIATES, INC.
3242 HENDERSON BOULEVARD
SUITE 300
TAMPA, FLORIDA 33609
(813) 876–5869

LANDSCAPE CONSULTANT

WAYNE C. PAPY CENTER
ADA IMPROVEMENTS
6925 NORTH FLORIDA AVENUE
TAMPA, FLORIDA 33604

DPW FILE NUMBER
X

DPW NUMBER
X

ISSUE DATE
JUNE 30 2015

DRAWN BY
DEG

REVISIONS

SEAL

ELIZABETH A. BROADWAY
PROFESSIONAL ENGINEER
FLORIDA REGISTRATION NO. 38558

SCALE: 1/4" = 1'-0"

FOUNDATION PLAN

SHEET NUMBER
S–1

X OF X

BROADWAY ENGINEERING, P.A.
CIVIL, MECHANICAL, STRUCTURAL AND BUILDING DESIGN
See Us At www.Broadway–Eng.Com
1335 W. Cass Street
Tampa, Florida 33606 813-251-9244
Fax 813–251–9330 Bus. Email: Info@Broadway–Eng.Com
Cadd. Email: DGarr@Broadway–Eng.Com
BE–4254 Certificate of Authorization No. 4599

C:\CAD\JOBS\4254\S-1.dwg
Jun 30, 2015

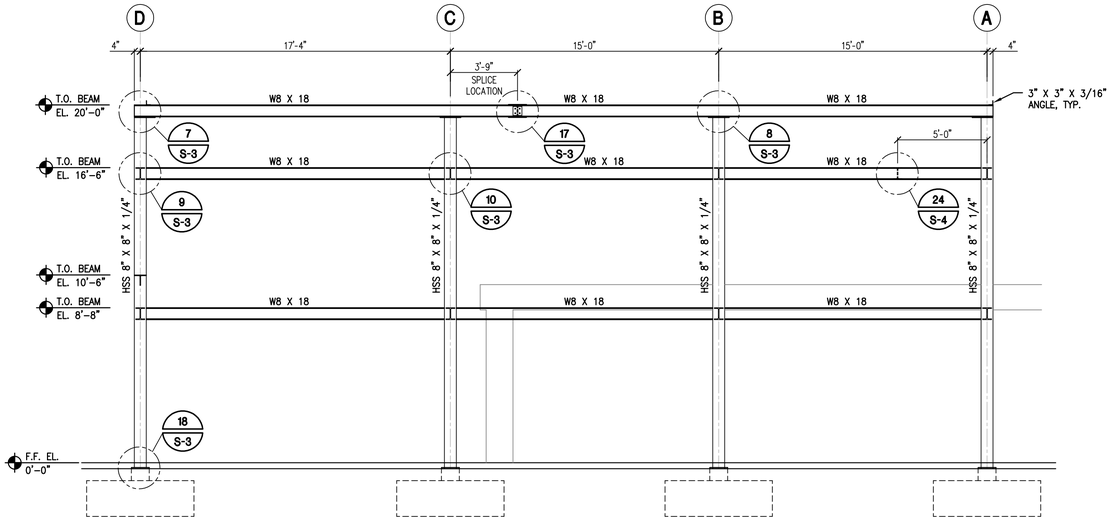

1 / S-2 FRAMING ELEVATION - FRAME LINE 3
SCALE: 1/4" = 1'-0"

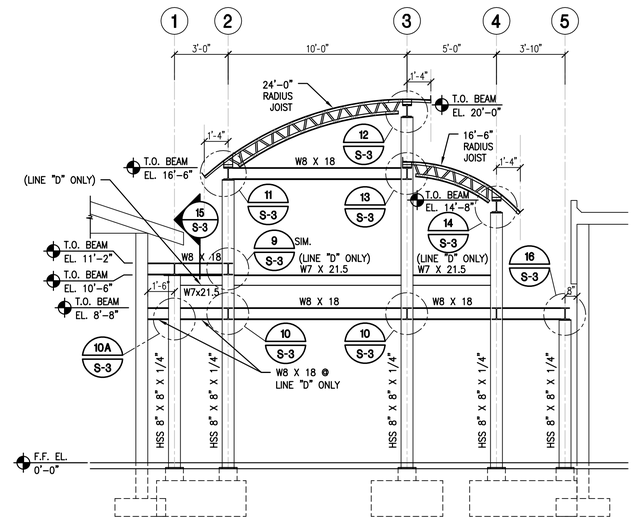

4 / S-2 FRAMING ELEVATION - FRAME LINES B, C, & D
SCALE: 1/4" = 1'-0"

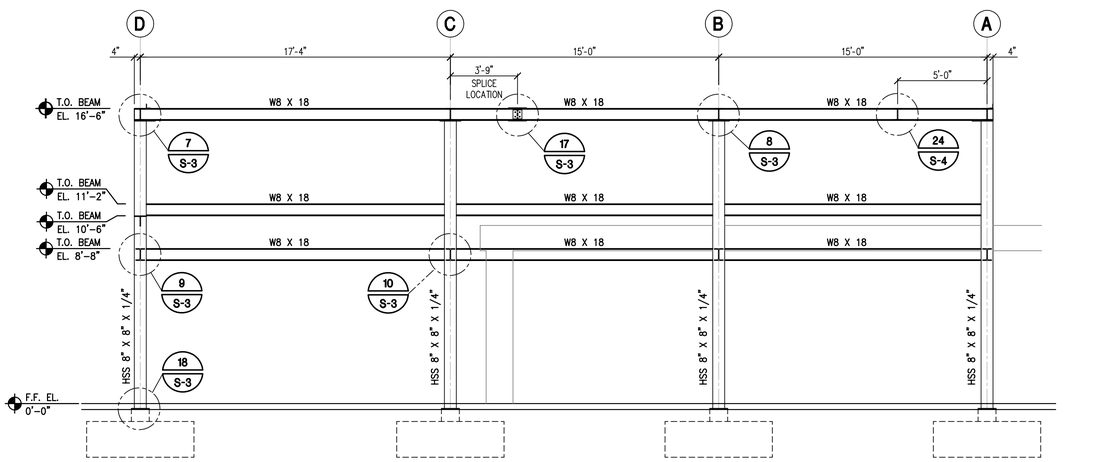

2 / S-2 FRAMING ELEVATION - FRAME LINE 2
SCALE: 1/4" = 1'-0"

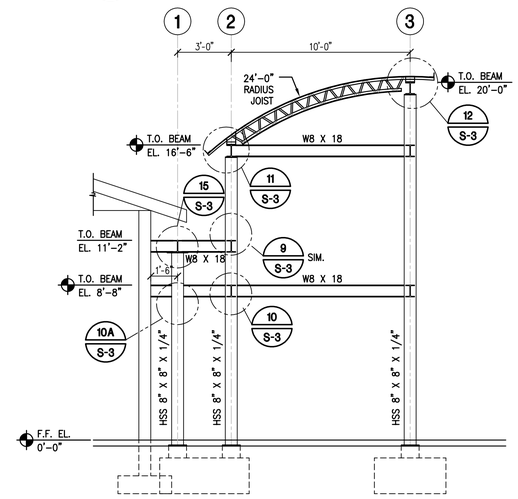

5 / S-2 FRAMING ELEVATION - FRAME LINE A
SCALE: 1/4" = 1'-0"

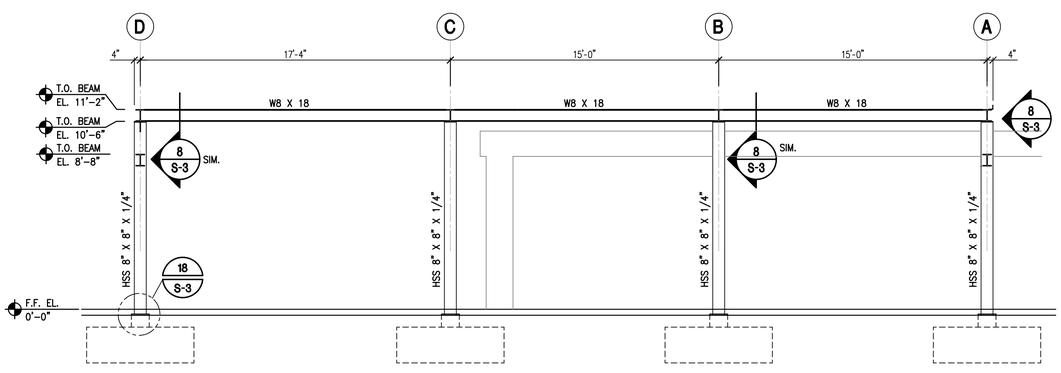

3 / S-2 FRAMING ELEVATION - FRAME LINE 1
SCALE: 1/4" = 1'-0"

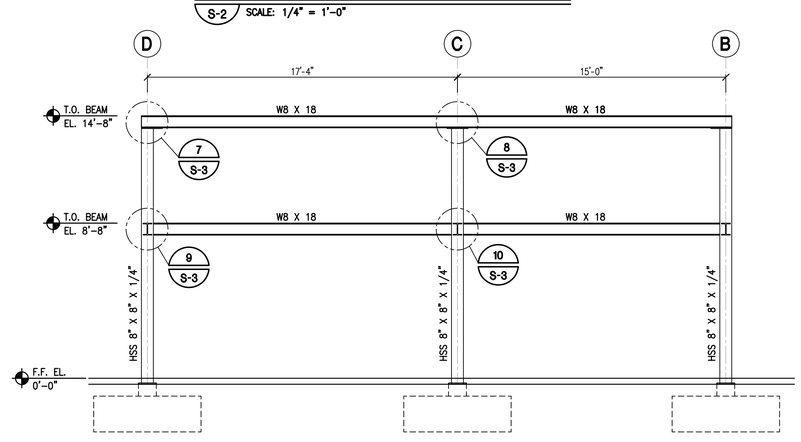

6 / S-2 FRAMING ELEVATION - FRAME LINE 4, LINE 5 SIM.
SCALE: 1/4" = 1'-0"

GENERAL NOTES

KEY NOTES

BROADWAY ENGINEERING, P.A.
CIVIL, MECHANICAL, STRUCTURAL AND BUILDING DESIGN
See Us At www.Broadway-Eng.Com
1335 W. Cass Street
Tampa, Florida 33606 813-251-9244
Fax 813-251-9330 Bus. Email: Info@Broadway-Eng.Com
Cadd. Email: DCorr@Broadway-Eng.Com
BE-4254 Certificate of Authorization No. 4599

CITY OF TAMPA
CONTRACT ADMINISTRATION DEPARTMENT
PLANNING AND DESIGN DIVISION
306 E. JACKSON STREET 4 NORTH
TAMPA, FLORIDA 33602
p: 813. 274. 8456 – f: 813. 274. 8080
url: www.tampagov.net

James E. Jackson, Jr. AIA, NOMA
City Architect
Edward D. Rice, AIA
Project Architect
Kevin L. Henika, AIA
Project Architect
Thomas A. Hester, Sr., AIA, NOMA
Project Architect
David R. Pagitt
Supervisor, Architectural Drafting
Kinsey C. Tillman
Drafting Technician
Jerry P. Sanders
Drafting Technician
Byron K. Thomas, LEED AP
Drafting Technician

MEP CONSULTANT
HALL ENGINEERING GROUP
14499 N. DALE MABRY HWY #179
TAMPA, FLORIDA 33618
(813) 374–2121

STRUCTURAL CONSULTANT
BROADWAY ENGINEERING
1335 W. CASS ST.
TAMPA, FLORIDA 33606
(813) 251–9244
FAX. (813) 251–9330

CIVIL CONSULTANT
MILLS AND ASSOCIATES, INC.
3242 HENDERSON BOULEVARD
SUITE 300
TAMPA, FLORIDA 33609
(813) 876–5869

LANDSCAPE CONSULTANT

WAYNE C. PAPY CENTER
ADA IMPROVEMENTS
6925 NORTH FLORIDA AVENUE
TAMPA, FLORIDA 33604

DPW FILE NUMBER
X

DPW NUMBER
X

ISSUE DATE
JUNE 30 2015

DRAWN BY
DEG

REVISIONS

SEAL

ELIZABETH A. BROADWAY
PROFESSIONAL ENGINEER
FLORIDA REGISTRATION NO. 38558

SCALE: 1/4" = 1'-0"

FRAMING ELEVATIONS

SHEET NUMBER
S-2

X OF X

C:\CAD\JOBS\4254\S-2.dwg Jun 30, 2015

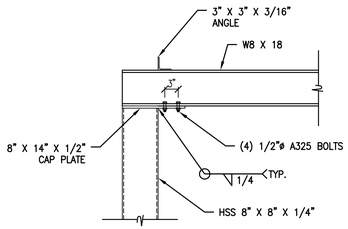

7 FRAMING DETAILS
S-3 SCALE: 3/4" = 1'-0"

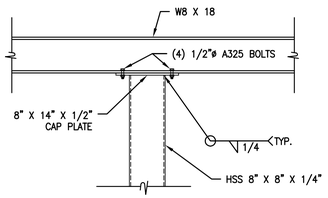

8 FRAMING DETAILS
S-3 SCALE: 3/4" = 1'-0"

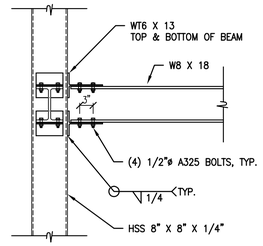

9 FRAMING DETAILS
S-3 SCALE: 3/4" = 1'-0"

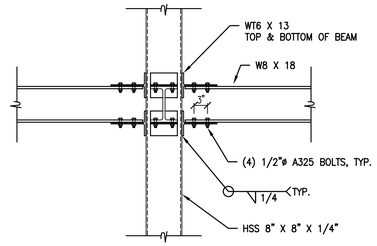

10 FRAMING DETAILS
S-3 SCALE: 3/4" = 1'-0"

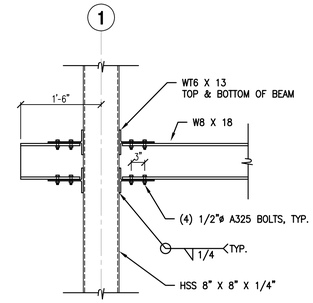

10A FRAMING DETAILS
S-3 SCALE: 3/4" = 1'-0"

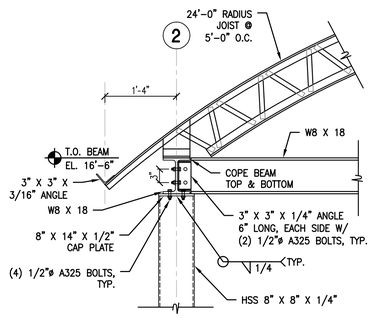

11 FRAMING DETAILS
S-3 SCALE: 3/4" = 1'-0"

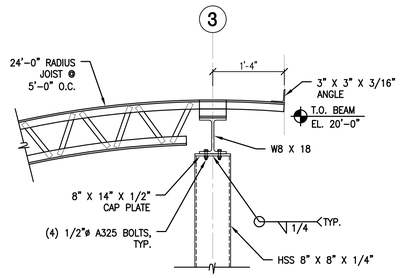

12 FRAMING DETAILS
S-3 SCALE: 3/4" = 1'-0"

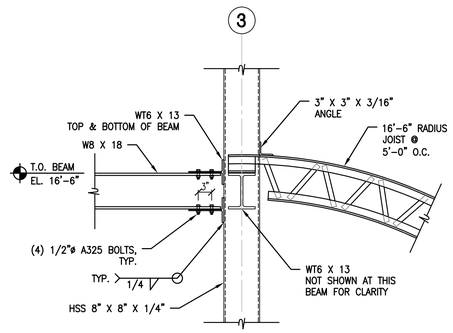

13 FRAMING DETAILS
S-3 SCALE: 3/4" = 1'-0"

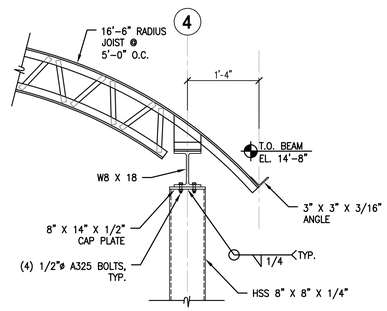

14 FRAMING DETAILS
S-3 SCALE: 3/4" = 1'-0"

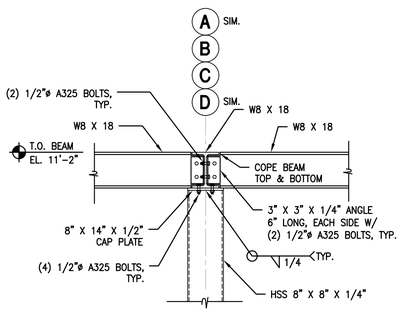

15 FRAMING DETAILS
S-3 SCALE: 3/4" = 1'-0"

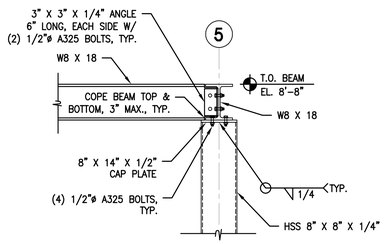

16 FRAMING DETAILS
S-3 SCALE: 3/4" = 1'-0"

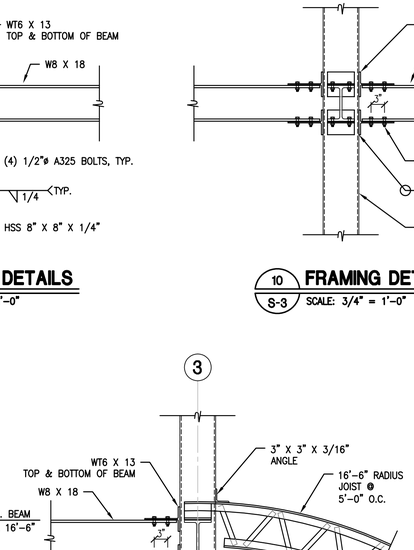

19 FRAMING DETAILS
S-3 SCALE: 1/2" = 1'-0"

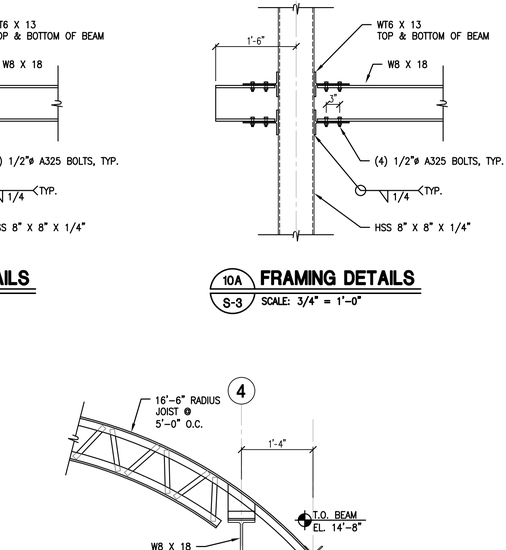

20 FRAMING DETAILS
S-3 SCALE: 1/2" = 1'-0"

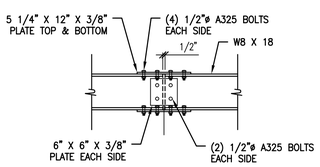

17 FRAMING DETAILS
S-3 SCALE: 3/4" = 1'-0"

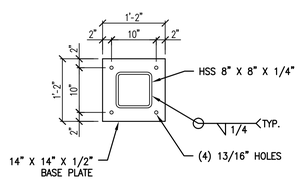

18 BASE PLATE DETAIL
S-3 SCALE: 3/4" = 1'-0"

GENERAL NOTES

NOTE TO FABRICATOR:

ALL FRAMING CONNECTIONS ARE DESIGNED AS MOMENT CONNECTIONS EXCEPT AS NOTED BELOW;

1. W8 X 18 BEAMS @ FRAME LINE 1.
2. W8 X 18 BEAMS @ FRAME LINES B, C, & D @ FRAME LINE 5 ONLY AS SHOWN ON DETAIL 16/S-3.

KEY NOTES

BROADWAY ENGINEERING, P.A.
CIVIL, MECHANICAL, STRUCTURAL AND BUILDING DESIGN
See Us At www.Broadway-Eng.Com
1335 W. Cass Street
Tampa, Florida 33606 813-251-9244
Fax 813-251-9330 Bus. Email: Info@Broadway-Eng.Com
Codd. Email: DGorr@Broadway-Eng.Com
BE-4254 Certificate of Authorization No. 4599

CITY OF TAMPA
CONTRACT ADMINISTRATION DEPARTMENT
PLANNING AND DESIGN DIVISION
306 E. JACKSON STREET 4 NORTH
TAMPA, FLORIDA 33602
p: 813. 274. 8456 – f: 813. 274. 8080
url: www.tampagov.net

James E. Jackson, Jr. AIA, NOMA
City Architect
Edward D. Rice, AIA
Project Architect
Kevin L. Henika, AIA
Project Architect
Thomas A. Hester, Sr., AIA, NOMA
Project Architect
David R. Pagitt
Supervisor, Architectural Drafting
Kinsey C. Tillman
Drafting Technician
Jerry P. Sanders
Drafting Technician
Byron K. Thomas, LEED AP
Drafting Technician

MEP CONSULTANT
HALL ENGINEERING GROUP
14499 N. DALE MABRY HWY #179
TAMPA, FLORIDA 33618
(813) 374–2121

STRUCTURAL CONSULTANT
BROADWAY ENGINEERING
1335 W. CASS ST.
TAMPA, FLORIDA 33606
(813) 251–9244
FAX. (813) 251–9330

CIVIL CONSULTANT
MILLS AND ASSOCIATES, INC.
3242 HENDERSON BOULEVARD
SUITE 300
TAMPA, FLORIDA 33609
(813) 876–5869

LANDSCAPE CONSULTANT

WAYNE C. PAPY CENTER
ADA IMPROVEMENTS
6925 NORTH FLORIDA AVENUE
TAMPA, FLORIDA 33604

DPW FILE NUMBER
X

DPW NUMBER
X

ISSUE DATE
JUNE 30 2015

DRAWN BY
DEG

REVISIONS

SEAL

ELIZABETH A. BROADWAY
PROFESSIONAL ENGINEER
FLORIDA REGISTRATION NO. 38558

SCALE: 1/2" = 1'-0"

FRAMING DETAILS

SHEET NUMBER
S-3

X OF X

Jun 30, 2015

C:\CAD\JOBS\4254\S-3.dwg

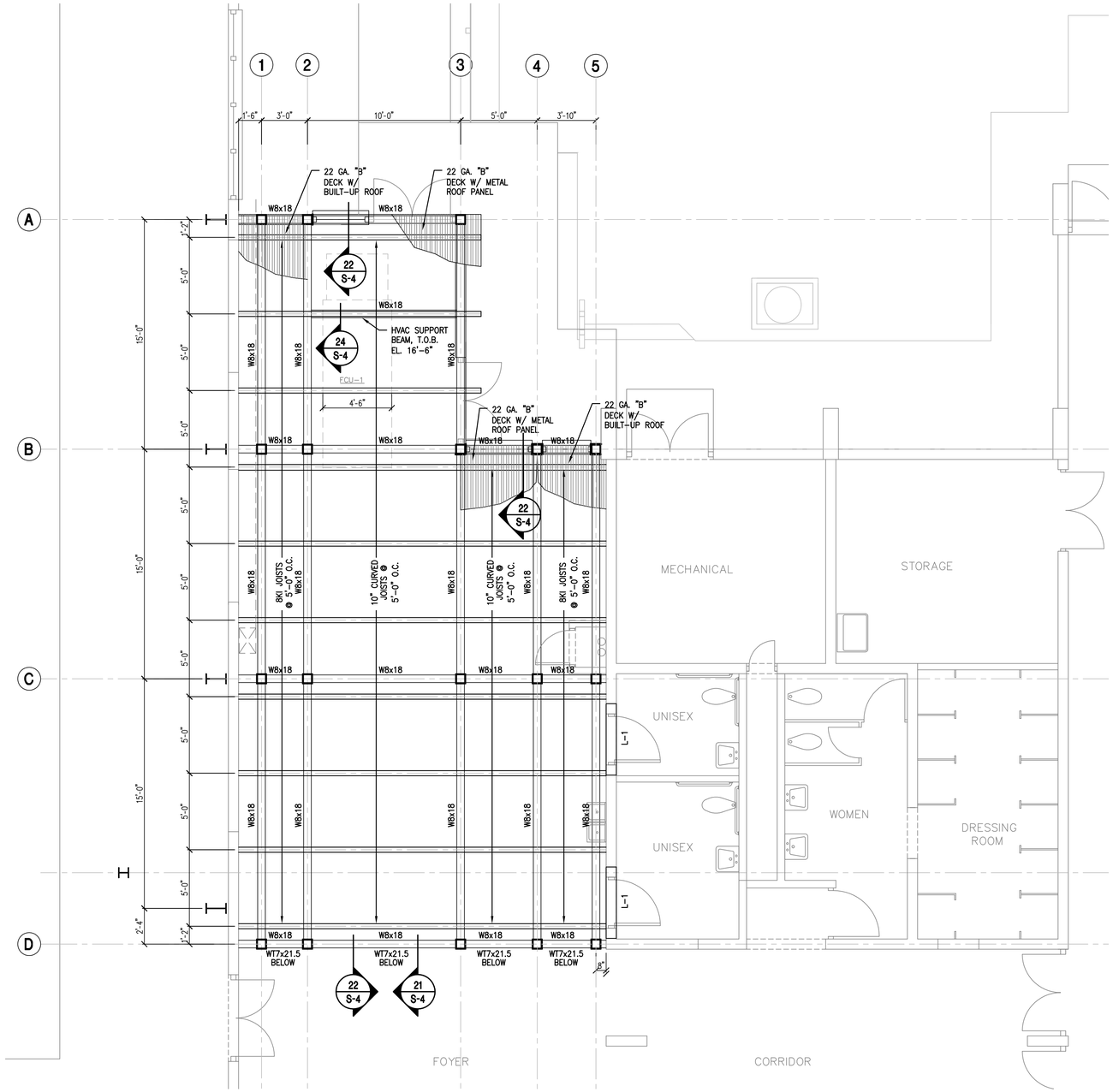

ROOF FRAMING PLAN

SCALE: 1/4" = 1'-0"

OPEN WEB BAR JOIST DESIGN CRITERIA						
AREA	LIVE LOAD (PLF)	DEAD LOAD (PLF)	NET WIND UPLIFT LOAD (PLF)	SIZE	SPACING (FT.)	NOTES
EXIST. GYM BLDG. TO FRAME LINE 2	100	100	230	8KI	5'-0"	18" TOP CHORD EXTENSION @ ONE END
FRAME LINE 2 TO FRAME LINE 3	100	100	186	10" DEEP 24'-0" RADIUS	5'-0"	16" TOP CHORD EXTENSION @ BOTH ENDS
FRAME LINE 3 TO FRAME LINE 4	100	100	230	10" DEEP 16'-6" RADIUS	5'-0"	16" TOP CHORD EXTENSION @ ONE END
FRAME LINE 4 TO FRAME LINE 5	100	50	230	8KI	5'-0"	8" TOP CHORD EXTENSION @ ONE END

PRECAST LINTEL SCHEDULE						
MARK	TYPE	REINFORCEMENT	LENGTH	GRAVITY (PLF)	UPLIFT (PLF)	LATERAL (PLF)
L-1	8" X 8" PRECAST	–	4'-8"	221	–	–

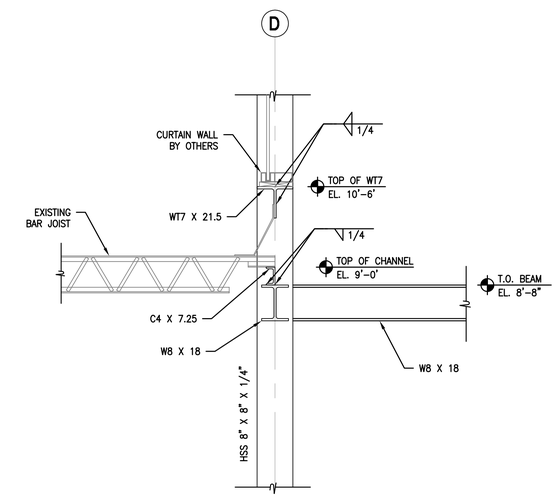

21 / S-4 FRAMING DETAILS

SCALE: 3/4" = 1'-0"

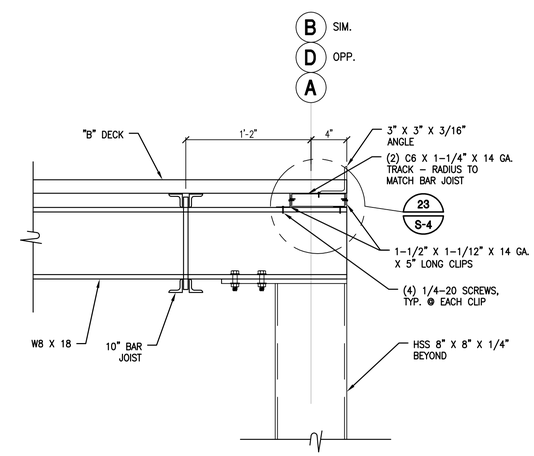

22 / S-4 ROOF DECK END

SCALE: 1-1/2" = 1'-0"

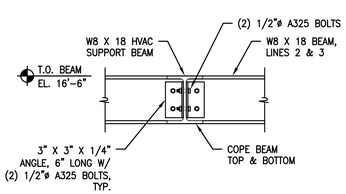

24 / S-4 FRAMING DETAIL

SCALE: 1" = 1'-0"

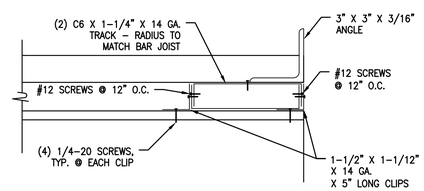

23 / S-4 ROOF DECK END TRACK DETAIL

SCALE: 3" = 1'-0"

GENERAL NOTES

KEY NOTES

CITY OF TAMPA
CONTRACT ADMINISTRATION DEPARTMENT
PLANNING AND DESIGN DIVISION
306 E. JACKSON STREET 4 NORTH
TAMPA, FLORIDA 33602
p: 813. 274. 8456 – f: 813. 274. 8080
url: www.tampagov.net

James E. Jackson, Jr. AIA, NOMA
City Architect
Edward D. Rice, AIA
Project Architect
Kevin L. Henika, AIA
Project Architect
Thomas A. Hester, Sr., AIA, NOMA
Project Architect
David R. Pagitt
Supervisor, Architectural Drafting
Kinsey C. Tillman
Drafting Technician
Jerry P. Sanders
Drafting Technician
Byron K. Thomas, LEED AP
Drafting Technician

MEP CONSULTANT
HALL ENGINEERING GROUP
14499 N. DALE MABRY HWY #179
TAMPA, FLORIDA 33618
(813) 374–2121

STRUCTURAL CONSULTANT
BROADWAY ENGINEERING
1335 W. CASS ST.
TAMPA, FLORIDA 33606
(813) 251–9244
FAX. (813) 251–9330

CIVIL CONSULTANT
MILLS AND ASSOCIATES, INC.
3242 HENDERSON BOULEVARD
SUITE 300
TAMPA, FLORIDA 33609
(813) 876–5869

LANDSCAPE CONSULTANT

WAYNE C. PAPY CENTER
ADA IMPROVEMENTS
6925 NORTH FLORIDA AVENUE
TAMPA, FLORIDA 33604

DPW FILE NUMBER
X

DPW NUMBER
X

ISSUE DATE
JUNE 30 2015

DRAWN BY
DEG

REVISIONS

SEAL

ELIZABETH A. BROADWAY
PROFESSIONAL ENGINEER
FLORIDA REGISTRATION NO. 38558

SCALE: 1/4" = 1'-0"

ROOF FRAMING PLAN

SHEET NUMBER
S–4

X OF X

BROADWAY ENGINEERING, P.A.
CIVIL, MECHANICAL, STRUCTURAL AND BUILDING DESIGN
See Us At www.Broadway–Eng.Com
1335 W. Cass Street
Tampa, Florida 33606 813-251-9244
Fax 813–251–9330 Bus. Email: Info@Broadway–Eng.Com
Cadd. Email: DCorr@Broadway–Eng.Com
BE–4254 Certificate of Authorization No. 4599

C:\CAD\JOBS\4254\S-4.dwg Jun 30, 2015

GENERAL NOTES

GENERAL

1.- ALL DRAWINGS SHALL BE USED IN CONJUNCTION WITH EACH OTHER TO COORDINATE WITH MECHANICAL, ELECTRICAL, PLUMBING AND SITE PLANS.

2.- CHECK ALL SHOP DRAWINGS FOR SLEEVES, DEPRESSIONS, AND PLUMBING DETAILS NOT SHOWN ON THESE DRAWINGS.

3.- AS A MINIMUM, CONSTRUCTION SHALL COMPLY WITH CITY OF TAMPA, THE 2010 FLORIDA BUILDING CODE, ACI 318-08, ACI 350, 1986-89 AISI, AND LATEST AISC AND MBMA SPECIFICATIONS.

4.- ALL DETAILS AND SECTIONS SHOWN ON THE DRAWINGS ARE INTENDED TO BE TYPICAL AND SHALL BE CONSTRUED TO APPLY TO ANY SIMILAR SITUATION ELSEWHERE ON THE PROJECT, EXCEPT WHERE A DIFFERENT DETAIL IS SHOWN.

5.- ALL DIMENSIONS AND CONDITIONS MUST BE VERIFIED IN THE FIELD. DO NOT SCALE THE DRAWINGS. FOLLOW WRITTEN DIMENSIONS ONLY. ANY DISCREPANCIES SHALL BE BROUGHT TO THE ATTENTION OF THE ENGINEER PRIOR TO PROCEEDING WITH THE AFFECTED PART OF THE WORK.

6.- THE STRUCTURE IS DESIGNED TO BE SELF SUPPORTING AND STABLE AFTER THE BUILDING IS COMPLETE. IT IS THE CONTRACTOR'S RESPONSIBILITY TO DETERMINE ERECTION PROCEDURES AND SEQUENCE TO INSURE SAFETY OF THE BUILDING AND ITS COMPONENTS DURING ERECTION.

7.- BUILDING ERECTION INCLUDES THE ADDITION OF NECESSARY SHORING, SHEETING, TEMPORARY BRACING, GUYS OR TIEDOWNS.

8.- THE CONTRACTOR SHALL SUPPLEMENT THE MINIMUM REQUIRED FOUNDATION AND SITE PREPARATION REQUIREMENTS AND SLAB-ON-GRADE THICKNESS TO HANDLE CONSTRUCTION AND EQUIPMENT LOADS.

9.- FIELD VERIFY EXISTING BUILDING CONDITIONS, DIMENSIONS, SIZE, VOLTAGE, AND LOCATION OF UTILITIES PRIOR TO NEW OR REMODELING WORK.

10.- DEVIATIONS FROM DRAWINGS SHALL BE APPROVED BY THE ENGINEER.

11.- INFORM ENGINEER OF CONSTRUCTION CONFLICTS FOUND AMONG TRADES FOR ANY REQUIRED CHANGES FROM THESE DRAWINGS.

DESIGN LOADS

1.- ROOF LIVE LOADS SHALL BE 12/20 PSF, AS PER THE 2010 FLORIDA BUILDING CODE, SECTION 1607. IN ADDITION TO BUILDING WEIGHT, 10 PSF OF COLLATERAL DEAD LOAD SHALL BE APPLIED TO THE ROOF.

2.- WIND LOADS SHALL BE 145 MPH , APPLIED AS PER THE 2010 FLORIDA BUILDING CODE, SECTION 1609.

3.- WIND LOADS FOR COMPONENTS AND CLADDING SHALL BE AS SHOWN BELOW:

WIND LOADS FOR COMPONENTS AND CLADDING (PSF)					
TRIBUTARY AREA ($FT.^2$)	ROOF ZONE			WALL ZONE	
	1	2	3	4	5
10	29.0	40.3	62.9	26.5	32.6
20	29.0	39.6	56.1	25.4	30.4
50	29.0	38.7	47.1	23.9	27.5
100	29.0	38.0	40.3	23.5	25.4

4.- WIND LOADS FOR MAIN WIND FORCE RESISTING SYSTEM SHALL BE AS SHOWN BELOW:

WIND LOADS FOR MAIN WIND FORCE RESISTING SYSTEM (PSF)												
LOAD CASE	ZONE											
	1	2	3	4	5	6	1E	2E	3E	4E	5E	6E
A	16.8	25.1	15.9	13.6	–	–	22.9	36.1	20.5	17.6	–	–
B	18.2	25.1	15.9	18.2	16.8	13.6	19.1	36.1	20.5	19.1	22.9	17.6

NOTES:

1. WIND LOADS HAVE BEEN CALCULATED IN ACCORDANCE WITH ASCE 7-10. WIND VELOCITY OF 145 MPH, EXPOSURE B, ENCLOSED BUILDING (GCP = ±0.18), RISK CATEGORY II.
2. CORNER DISTANCE IS EQUAL TO 3.0 FT.
3. WIND LOADS HAVE BEEN MULTIPLIED BY 0.6 FOR ALLOWABLE STRESS DESIGN, PER ASCE 7-10, SECTION 2.4.

5.- BUILDING DEFLECTIONS SHALL BE LIMITED TO:

FRAMES: L/240 FOR LIVE PLUS DEAD LOADS
H/180 FOR BUILDING DRIFT DUE TO WIND
L/180 FOR WIND PLUS DEAD LOADS

JOISTS: L/240 FOR LIVE PLUS DEAD LOADS
L/180 FOR WIND UPLIFT

WALL BEAMS / GIRTS: L/180 FOR WIND LOADS

STUDS: L/240 FOR WIND LOADS (OR INTERIOR LATERAL LOADS)

6.- INTERIOR WALL LATERAL/WIND LOADS SHALL BE 10 PSF.

7.- THE WIND UPLIFT ON JOISTS SHALL NOT TAKE INTO ACCOUNT THE 10 PSF OF COROLLARY DEAD LOAD.

FORMWORK

1.- FORMWORK, SHORING, AND BRACING FOR ALL CONCRETE BEAMS, SLABS, COLUMNS, AND WALLS SHALL BE DESIGNED AND CONSTRUCTED IN ACCORDANCE WITH ACI 347, "RECOMMENDED PRACTICE FOR CONCRETE FORMWORK".

REINFORCING STEEL

1.- REBAR SHALL BE ASTM A615 GRADE 60 DEFORMED BARS, FREE FROM OIL, SCALE, AND RUST.

2.- REINFORCING BARS SHALL BE PLACED IN ACCORDANCE WITH THE TYPICAL BENDING DIAGRAM AND PLACING DETAILS OF THE ACI STANDARDS AND SPECIFICATIONS.

3.- HORIZONTAL AND VERTICAL BARS SHALL LAP A MINIMUM OF 5 X BAR NO. = INCHES, (40 BAR DIAMETERS) UNLESS OTHERWISE NOTED.

WELDED WIRE MESH FIBERS

1.- WELDED WIRE MESH IF USED, SHALL BE ASTM A185, GRADE 65, FREE FROM OIL, SCALE, AND RUST.

2.- WIRE MESH SHALL BE PLACED IN ACCORDANCE WITH ACI DETAILS.

3.- MINIMUM WIRE MESH LAP SHALL BE ONE WIRE SPACE PLUS TWO INCHES.

FOUNDATION/SITE PREPARATION

1.- FOOTINGS ARE DESIGNED FOR AN ASSUMED ALLOWABLE SOIL BEARING PRESSURE OF 2000 PSF.

2.- FOUNDATIONS AND SITE PREPARATION SHALL BE COMPLETED IN SUBSTANTIAL ACCORDANCE WITH STANDARD PRACTICES AND WITH THE RECOMMENDATIONS OF THE SUBSURFACE EXPLORATION SOILS REPORT.

3.- FOOTING EXCAVATIONS AND SLAB SUBGRADE SHALL BE COMPACTED TO A DRY DENSITY OF AT LEAST 98% OF THE MODIFIED PROCTOR MAXIMUM DRY DENSITY, DETERMINED IN ACCORDANCE WITH ASTM D1557.

4.- THE CONTRACTOR SHALL RETAIN THE SERVICES OF AN INDEPENDENT GEOTECHNICAL ENGINEER TO VERIFY SUCCESSFUL COMPLETION OF SITE / FOUNDATION PREPARATION EFFORTS.

5.- LOCATIONS FAILING TO MEET THE GEOTECHNICAL ENGINEER'S REQUIREMENTS SHALL BE RECOMPACTED AND RETESTED AT THE CONTRACTOR'S EXPENSE, AND AS DIRECTED BY THE ENGINEER.

6.- WRITTEN CERTIFICATION THAT THE MINIMUM DESIGN BEARING CAPACITY, AND THAT THE COMPACTION REQUIREMENTS HAVE BEEN MET SHALL BE MADE BY THE GEOTECHNICAL ENGINEER.

7.- ALL SLABS AND FOOTINGS SHALL BE PLACED OVER A 6 MIL THICK VAPOR BARRIER MEMBRANE.

STEEL ROOF DECK

1.– STEEL ROOF DECK SHALL BE A MINIMUM OF 1-1/2", 22 GA. "B" DECK.

2.– ALL STEEL ROOF DECK SHALL BE HOT-DIPPED GALVANIZED AS PER ASTM SPECIFICATIONS.

3.– ALL STEEL ROOF DECK SHALL BE CAPABLE OF SUPPORTING ALL CONSTRUCTION LOADS.

4.– ALL STEEL ROOF DECK SHALL BE CONTINUOUS OVER THREE OR MORE STRUCTURAL SUPPORTS.

5.– NO ELECTRICAL, MECHANICAL, PLUMBING, OR ARCHITECTURAL ITEMS SHALL BE HUNG FROM ROOF DECK. ANY ITEMS REQUIRING SUPPORT SHALL BE HUNG FROM STRUCTURAL COMPONENTS ONLY.

6.– STEEL ROOF DECK SHALL BE WELDED AT ENDS AND ALL INTERMEDIATE SUPPORTING MEMBERS WITH ¼" DIAMETER PUDDLE WELDS ON 36/5 PATTERN.

7.– STEEL ROOF DECK SIDELAPS SHALL BE FASTENED WITH #10 SCREWS.

CONCRETE

1.- CONCRETE SHALL ACHIEVE MINIMUM 28 DAY COMPRESSIVE STRENGTHS AS LISTED BELOW:

4000 PSI FOR SLABS ON GRADE, AND FOOTINGS.

2.- CONCRETE SLUMP SHALL NOT EXCEED 4"±1" (EXCEPT FOR GROUTS).

3.- CONCRETE SHALL COMPLY WITH ALL THE REQUIREMENTS OF ACI 301 AND ASTM C94 FOR MEASURING, MIXING, TRANSPORTING, ETC.

4.- CONCRETE TICKETS SHALL BE STAMPED WHEN CONCRETE IS BATCHED.

5.- THE MAXIMUM TIME ALLOWED FROM THE TIME THE WATER IS ADDED TO CONCRETE UNTIL IT IS DEPOSITED IN ITS FINAL POSITION SHALL NOT EXCEED ONE AND ONE-HALF (1-1/2) HOURS.

6.- IF FOR ANY REASON THERE IS A LONGER DELAY THAN THAT STATED ABOVE, THE CONCRETE SHALL BE DISCARDED.

7.- IT SHALL BE THE RESPONSIBILITY OF THE CONTRACTOR'S RETAINED TESTING LAB TO NOTIFY THE OWNER'S REPRESENTATIVE AND THE ENGINEER OF ANY NONCOMPLIANCE WITH THE ABOVE.

8.- ALL CONCRETE SHALL BE CURED USING CURING COMPOUND MEETING ASTM STANDARD C309 TYPE 1 AND SHALL HAVE A FUGITIVE DYE.

9.- THE CURING COMPOUND SHALL BE PLACED AS SOON AS THE FINISHING IS COMPLETED OR AS SOON AS THE VISIBLE WATER HAS LEFT THE UNFINISHED CONCRETE.

10.- ALL SCUFFED OR BROKEN AREAS IN THE CURING MEMBRANE SHALL BE RECOATED DAILY.

11.- CALCIUM CHLORIDES SHALL NOT BE UTILIZED; OTHER ADMIXTURES MAY BE USED ONLY WITH THE APPROVAL OF THE ARCHITECT/ENGINEER.

12.- REQUIRED CONCRETE COVERAGE OVER REBAR SHALL BE AS FOLLOWS:

A: 3" FOR CONCRETE CAST AGAINST AND PERMANENTLY EXPOSED TO EARTH.
B: FOR CONCRETE EXPOSED TO EARTH AND/OR WEATHER:
1-1/2" FOR #5 AND SMALLER
2" FOR #6 AND LARGER
C: FOR CONCRETE NOT EXPOSED TO EARTH OR WEATHER:
3/4" FOR SLABS, WALLS, AND JOISTS
1-1/2" FOR BEAM AND COLUMN PRIMARY REINF., TIES, AND STIRRUPS.

13.– EXPANSION/CONTRACTION JOINTS IN CONCRETE SHALL BE SEALED.

STRUCTURAL STEEL

1.- THE MATERIAL, FABRICATION, AND ERECTION OF STRUCTURAL STEEL SHALL COMPLY WITH THE 9th EDITION OF THE AISC SPECIFICATION BY THE AMERICAN INSTITUTE OF STEEL CONSTRUCTION.

2.- STRUCTURAL STEEL SHALL BE ASTM A36 GRADE 36.

3.- STRUCTURAL TUBING SHALL BE ASTM A500, GRADE B, Fy = 46 KSI.

4.- CAST-IN-PLACE ANCHOR BOLTS AT COLUMN BASES SHALL BE ASTM A36 BOLTS.

5.- FRAMING BOLTS SHALL BE ASTM A325-N BOLTS WITH WASHERS UNDER THE TURNED NUT.

6.- BOLTS SHALL BE TIGHTENED IN ACCORDANCE WITH THE TURN-OF-THE-NUT METHOD.

7.- WELDING SHALL BE DONE BY AWS CERTIFIED WELDERS USING THE MOST RECENT AWS APPROVED TECHNIQUES.

8.- SHIELDED METAL ARC WELDING (SMAW) SHALL USE E70XX LOW-HYDROGEN ELECTRODES AND WELDED IN ACCORDANCE TO AWS SPECIFICATIONS.

9.- ALL STEEL SHALL RECEIVE SHOP AND FIELD TOUCH-UP COATS OF PAINT IN ACCORDANCE WITH SSPC SPECIFICATIONS.

LIGHT GAUGE STRUCTURAL STEEL

1.- THE STEEL STUD FRAMING CONTRACTOR SHALL SUBMIT SHOP DRAWINGS SHOWING LAYOUT, CONNECTION DETAILS, JOIST AND STUD SPACINGS AND ARRANGEMENTS, AND ANY OTHER DETAIL THAT MAY BE NEEDED DURING THE COURSE OF THE WORK FOR ALL LIGHT GAUGE METAL FRAMING.

2.- STEEL STUDS, TRACK, ANGLES, AND OTHER FRAMING MEMBERS SHALL BE OF TYPE SHOWN ON THE DRAWINGS, AND SHALL CONFORM TO ASTM A446, GRADE D (MINIMUM Fy = 50 KSI) FOR 16 GAUGE AND THICKER, AND GRADE A (MINIMUM Fy = 33 KSI) FOR 18 GAUGE AND THINNER, WITH HOT DIPPED GALVANIZED COATING CONFORMING TO ASTM A525 (CLASS G90).

3.- LIGHT GAUGE STEEL SHALL BE DESIGNED AS PER THE 1986-89 AISI SPECIFICATIONS AND AS MANUFACTURED BY DALE/INCOR, MARINO/WARE, ALLSTEEL, DIETRICH OR EQUAL.

4.- FRAMING MEMBERS SHALL BE CUT SQUARELY OR AT AN ANGLE AS REQUIRED TO FIT SQUARELY AGAINST ABUTTING MEMBERS.

5.- MEMBERS SHALL BE HELD FIRMLY IN PLACE UNTIL PROPERLY JOINED.

6.- JOINING OF STRUCTURAL MEMBERS SHALL BE MADE WITH SELF DRILLING SCREWS OR WELDING.

7.- WIRE TYING OF FRAMING MEMBERS IN STRUCTURAL APPLICATIONS SHALL NOT BE PERMITTED.

8.- ATTACHMENT OF COLLATERAL MATERIALS TO STEEL MEMBERS SHALL BE MADE WITH SELF-DRILLING SCREWS.

9.- STUDS SHALL SIT SQUARELY IN THE TOP AND BOTTOM RUNNER TRACKS WITH FIRM ABUTMENT AGAINST TRACK WEBS.

10.- NON-FULL HEIGHT STUD WALLS SHALL BE LATERALLY SUPPORTED AT THE TOP WITH "KICKERS" OR BRACES AT 8' ON CENTER MAXIMUM SPACING.

11.- STUD WALLS OVER 12' IN HEIGHT SHALL HAVE CONTINUOUS COLD-ROLLED CHANNEL BRIDGING AT 6' MAXIMUM ON CENTER VERTICALLY, INSTALLED THROUGH THE STUD HOLES.

12.- STUD ENDS SHALL NOT BE CUT THROUGH A STUD HOLE.

13.- FIELD CUT STUD HOLES OR NOTCHES SHALL BE REINFORCED BY SCREWING ANGLES OR STUD SECTIONS OF EQUAL THICKNESS TO THE CUT MEMBER.

14.- BASE TRACK SHALL BE ANCHORED TO THE STEEL/CONCRETE AS SHOWN ON THE DRAWINGS.

15.- ALL FASTENERS USED WITH LIGHT GAUGE STEEL SHALL BE A MINIMUM OF #12 SELF-DRILLING SCREWS AS MANUFACTURED BY BUILDEX, GUARDIAN, OR EQUAL.

TERMITE PROTECTION

1.- CONDENSATE AND ROOF DOWNSPOUTS SHALL DISCHARGE AT LEAST 1'-0" AWAY FROM BUILDING SIDE WALLS IN ACCORDANCE WITH 2010 FLORIDA BUILDING CODE SECTION 1503.4.

2.- TO PROVIDE FOR INSPECTION FOR TERMITE INFESTATION, BETWEEN WALL COVERING AND FINAL EARTH GRADE SHALL NOT BE LESS THAN 6 INCHES. EXCEPTION: PAINT OR DECORATIVE CEMENTIOUS FINISH LESS THAN 5/8" THICK ADHERED DIRECTLY TO THE FOUNDATION WALL IN ACCORDANCE WITH 2010 FLORIDA BUILDING CODE SECTION 1403.7.

3.- INITIAL TREATMENT SHALL BE DONE AFTER ALL EXCAVATION AND BACKFILL IS COMPLETE IN ACCORDANCE WITH 2010 FLORIDA BUILDING CODE SECTION 1816.1.1.

4.- SOIL DISTURBED AFTER THE INITIAL TREATMENT SHALL BE RE-TREATED INCLUDING SPACES BOXED OR FORMED IN ACCORDANCE WITH 2010 FLORIDA BUILDING CODE SECTION 1816.1.2.

5.- BOXED AREAS IN CONCRETE FLOORS FOR SUBSEQUENT INSTALLATION OF TRAPS, ETC., SHALL BE MADE WITH PERMANENT METAL OR PLASTIC FORMS. PERMANENT FORMS MUST BE OF SIZE AND DEPTH THAT WILL ELIMINATE THE DISTURBANCE OF SOIL AFTER THE INITIAL TREATMENT IN ACCORDANCE WITH 2010 FLORIDA BUILDING CODE SECTION 1816.1.3.

6.- MINIMUM 6 MIL VAPOR RETARDER MUST BE INSTALLED TO PROTECT AGAINST RAINFALL DILUTION. IF RAINFALL OCCURS BEFORE VAPOR RETARDER PLACEMENT, RE-TREATMENT IS REQUIRED IN ACCORDANCE WITH 2010 FLORIDA BUILDING CODE SECTION 1816.1.4.

7.- CONCRETE OVER-POUR AND MORTAR ALONG THE FOUNDATION PERIMETER MUST BE REMOVED BEFORE EXTERIOR SOIL TREATMENT IN ACCORDANCE WITH 2010 FLORIDA BUILDING CODE SECTION 1816.1.5.

8.- SOIL TREATMENT MUST BE APPLIED UNDER ALL EXTERIOR CONCRETE OR GRADE WITHIN 1'-0" OF THE STRUCTURE SIDEWALLS IN ACCORDANCE WITH 2010 FLORIDA BUILDING CODE SECTION 1816.1.6.

9.- AN EXTERIOR VERTICAL CHEMICAL BARRIER MUST BE INSTALLED AFTER CONSTRUCTION IS COMPLETE INCLUDING LANDSCAPING AND IRRIGATION. ANY SOIL DISTURBED AFTER THE VERTICAL BARRIER IS APPLIED, SHALL BE RE-TREATED IN ACCORDANCE WITH 2010 FLORIDA BUILDING CODE SECTION 1816.1.6.

10.- ALL BUILDINGS ARE REQUIRED TO HAVE PRE-CONSTRUCTION TREATMENT IN ACCORDANCE WITH 2010 FLORIDA BUILDING CODE SECTION 1816.1.7.

11.- A CERTIFICATE OF COMPLIANCE MUST BE ISSUED TO THE BUILDING DEPARTMENT BY A LICENSED PEST CONTROL COMPANY BEFORE A CERTIFICATE OF OCCUPANCY WILL BE ISSUED. THE CERTIFICATE OF COMPLIANCE SHALL STATE: THE BUILDING HAS RECEIVED A COMPLETE TREATMENT FOR THE PREVENTION OF SUBTERRANEAN TERMITES. THE TREATMENT IS IN ACCORDANCE WITH THE RULES AND LAWS OF THE FLORIDA DEPARTMENT OF AGRICULTURE AND CONSUMER SERVICES IN ACCORDANCE WITH 2010 FLORIDA BUILDING CODE SECTION 1816.1.7.

12.- AFTER ALL WORK IS COMPLETED, LOOSE WOOD AND FILL MUST BE REMOVED FROM BELOW AND WITHIN 1'-0" OF THE BUILDING. THIS INCLUDES ALL GRADE STAKES, TUB TRAP BOXES, FORMS, SHORING OR OTHER CELLULOSE CONTAINING MATERIAL IN ACCORDANCE WITH 2010 FLORIDA BUILDING CODE SECTION 2304.13.3.

13.- NO WOOD, VEGETATION, STUMPS, CARDBOARD, TRASH, ETC., SHALL BE BURIED WITHIN 1'-0" OF ANY BUILDING OR PROPOSED BUILDING IN ACCORDANCE WITH 2010 FLORIDA BUILDING CODE SECTION 2304.13.2.

SHOP DRAWING REVIEW

1.- SHOP DRAWINGS SHALL BE REVIEWED FOR GENERAL COMPLIANCE WITH THE DESIGN INTENT OF THE CONTRACT DOCUMENTS ONLY.

2.- IT SHALL BE THE RESPONSIBILITY OF THE CONTRACTOR TO VERIFY COMPLIANCE WITH THE CONTRACT DOCUMENTS AS TO QUANTITY, LENGTH, ELEVATIONS, DIMENSIONS, ETC.

3.- IN ALL INSTANCES, THE CONTRACT DOCUMENTS SHALL GOVERN THE SHOP DRAWINGS UNLESS OTHERWISE SPECIFIED IN WRITING BY THE ENGINEER.

STEEL JOISTS

1.– STEEL JOIST CONSTRUCTION SHALL CONFORM TO THE LATEST SPECIFICATIONS OF, AND THE JOISTS SHALL BE APPROVED BY THE STEEL JOIST INSTITUTE.

2.– UNLESS OTHERWISE NOTED, BEAR SHORT SPAN JOISTS MINIMUM OF 2-1/2" ON STEEL BEAMS AND BEAR LONG SPAN JOISTS MINIMUM OF 4" ON STEEL SUPPORTS.

3.– ALL JOISTS BEARING ON BEAMS SHALL BE WELDED OR BOLTED TO THOSE BEAMS.

4.– PROVIDE BRIDGING FOR ALL JOISTS AS REQUIRED BY THE STEEL JOIST INSTITUTE OR THE STEEL JOIST DESIGNER. BRIDGING SHALL CONSIST OF MINIMUM 1-1/4" X 1-1/4" X 1/8" ANGLES (U.N.O.).

5.– ALL BRIDGING SHALL BE PROVIDED AND INSTALLED BY JOIST SUPPLIER.

6.– ALL CLIPS AND CONNECTIONS SHALL BE SHOP WELDED.

7.– NO FIELD WELDING TO BAR JOISTS EXCEPT ITEMS SPECIFICALLY SHOWN ON STRUCTURAL DRAWINGS SHALL BE ALLOWED WITHOUT SPECIFIC PERMISSION FROM THE ENGINEER.

8.– NO JOISTS SHALL BE FIELD SPLICED.

9.– MAXIMUM DEFLECTION OF STEEL JOISTS = L/240.

10.– FOR PAINTING OF STEEL JOISTS, SEE SPECIFICATIONS.

11.– JOIST MANUFACTURER SHALL SUBMIT WITH THE SHOP DRAWINGS THE CATALOG USED FOR THE MANUFACTURE OF JOISTS, INDICATING THE LOAD TABLES AND SIZES OF ALL MEMBERS USED.

12.– NO LOADS EXCEEDING 40 POUNDS MAY BE HUNG FROM JOISTS WITHOUT SPECIFIC PERMISSION FROM THE STRUCTURAL ENGINEER. LOADS LESS THAN 40 POUNDS MAY BE HUNG AT PANEL POINTS ONLY. ANY COST INVOLVED IN REINFORCING OF JOISTS SHALL BE BORNE BY THE CONTRACTOR REQUIRING ADDED LOADS.

13.– ALL SHORT SPAN JOISTS, AND DEEP LONG SPAN JOISTS SHALL HAVE UNIFORM CROSS SECTION, WITH STANDARD DEAD LOAD CAMBER.

14.– FOR SPECIFIC JOIST ENDS, SEE DRAWINGS.

15.– RIGID CONNECTIONS OF BOTTOM CHORDS OF JOISTS TO COLUMNS SHALL BE MADE ONLY AFTER THE APPLICATION OF ALL THE DEAD LOADS. PROVIDE LOOSE BOLTED CONNECTION OF THESE BOTTOM CHORDS DURING ERECTION.

STOREFRONT / PANELS & FASCIAS

1.- ARCHITECTURAL WINDOW WALL SYSTEM PANELS & FASCIAS SHALL BE DESIGNED FOR THE DESIGN LOADS AND CODES AS SPECIFIED IN THESE NOTES & MEET 2010 FBC SECT. 2404.

2.- ALL FRAMING AND THEIR CONNECTIONS TO THE WALLS, SOFFITS AND FASCIA FRAMING SHALL BE AS PER THE MANUFACTURER INSTRUCTIONS.

3.- COORDINATE ARCHITECTURAL SOFFIT PANEL PLANS WITH ALL THE BUILDING DRAWINGS.

4.– STORE FRONT ALUMINUM AND GLAZING SYSTEM SHALL BE AS PER MANUFACTURER'S SPECIFICATIONS.

GENERAL NOTES

KEY NOTES

BROADWAY ENGINEERING, P.A.
CIVIL, MECHANICAL, STRUCTURAL AND BUILDING DESIGN
See Us At www.Broadway-Eng.Com
1335 W. Cass Street
Tampa, Florida 33606 813-251-9244
Fax 813-251-9330 Bus. Email: Info@Broadway-Eng.Com
Cadd. Email: DCorr@Broadway-Eng.Com
BE-4254 Certificate of Authorization No. 4599

CITY OF TAMPA
CONTRACT ADMINISTRATION DEPARTMENT
PLANNING AND DESIGN DIVISION
306 E. JACKSON STREET 4 NORTH
TAMPA, FLORIDA 33602
p: 813. 274. 8456 – f: 813. 274. 8080
url: www.tampagov.net

James E. Jackson, Jr. AIA, NOMA
City Architect
Edward D. Rice, AIA
Project Architect
Kevin L. Henika, AIA
Project Architect
Thomas A. Hester, Sr., AIA, NOMA
Project Architect
David R. Pagitt
Supervisor, Architectural Drafting
Kinsey C. Tillman
Drafting Technician
Jerry P. Sanders
Drafting Technician
Byron K. Thomas, LEED AP
Drafting Technician

MEP CONSULTANT
HALL ENGINEERING GROUP
14499 N. DALE MABRY HWY #179
TAMPA, FLORIDA 33618
(813) 374-2121

STRUCTURAL CONSULTANT
BROADWAY ENGINEERING
1335 W. CASS ST.
TAMPA, FLORIDA 33606
(813) 251-9244
FAX. (813) 251-9330

CIVIL CONSULTANT
MILLS AND ASSOCIATES, INC.
3242 HENDERSON BOULEVARD
SUITE 300
TAMPA, FLORIDA 33609
(813) 876-5869

LANDSCAPE CONSULTANT

WAYNE C. PAPY CENTER
ADA IMPROVEMENTS
6925 NORTH FLORIDA AVENUE
TAMPA, FLORIDA 33604

DPW FILE NUMBER
X

DPW NUMBER
X

ISSUE DATE
JUNE 30 2015

DRAWN BY
DEG

REVISIONS
△
△
△

SEAL

ELIZABETH A. BROADWAY
PROFESSIONAL ENGINEER
FLORIDA REGISTRATION NO. 38558

SCALE: 1/4" = 1'-0"

GENERAL NOTES

SHEET NUMBER
S-5

X OF X

C:\CAD\JOBS\4254\S-5.dwg Jun 30, 2015

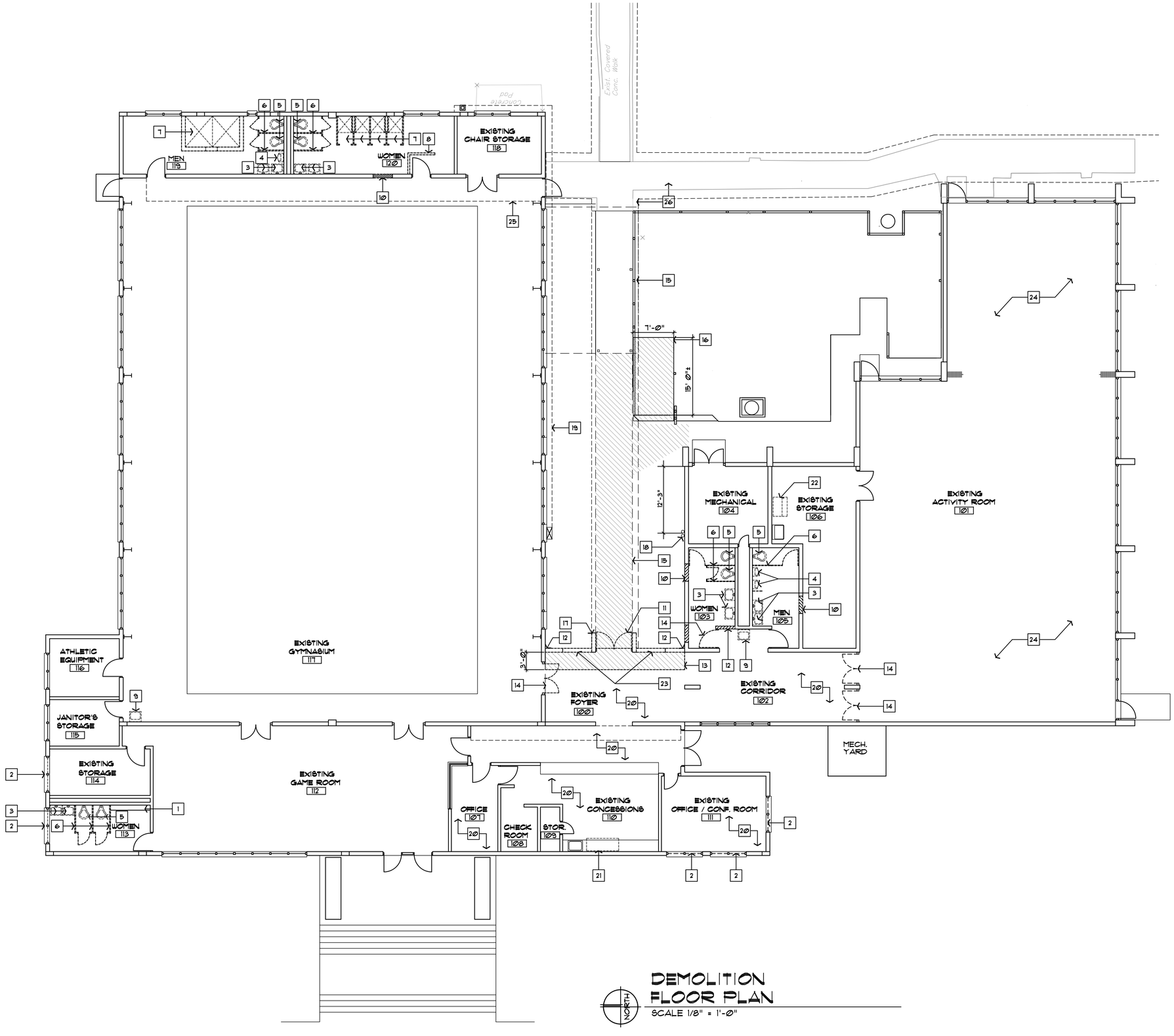

DEMOLITION FLOOR PLAN

SCALE 1/8" = 1'-0"

GENERAL NOTES

KEY NOTES

1. EXISTING SHELVING TO BE REMOVED
2. EXISTING WINDOWS TO BE REMOVED
3. EXISTING HAND SINKS TO BE REMOVED
4. EXISTING URINALS TO BE REMOVED
5. EXISTING TOILETS TO BE REMOVED
6. EXISTING TOILET PARTITIONS TO BE REMOVED
7. EXISTING SHOWERS AND PARTITION TO BE REMOVED
8. EXISTING PARTITION TO BE REMOVED
9. EXISTING WATER COOLER AND RELATED PIPING TO BE REMOVED / RELOCATED
10. REMOVE SECTION OF CONCRETE BLOCK WALL. ALLOW FOR INSTALLATION OF PRECAST CONC. LINTEL AND 8" FILLED CELLS ON BOTH SIDES OF INSTALLATION OF PRECAST CONC. LINTEL
11. REMOVE EXISTING PAIR OF EXTERIOR DOORS.
12. REMOVE EXISTING CONCRETE WALL SECTIONS.
13. REMOVE EXISTING PORTION OF CONCRETE SLAB AND VCT.
14. REMOVE EXISTING DOOR AND FRAME
15. REMOVE EXISTING CONCRETE SLAB WALK AND WALKWAY COVER ABOVE PERFORM ROOT PRUNING AROUND EXISTING TREE SYSTEM.
16. REMOVE PORTION OF EXISTING WOOD DECK.
17. REMOVE EXISTING CONCRETE WALL SEGMENTS AND BUILT- UP ROOF SECTION ABOVE.
18. EXISTING CHILLED WATER PIPING TO REMAIN.
19. EXISTING CHILLED WATER PIPING ENCLOSURE TO REMAIN.
20. REMOVE EXISITNG VCT AND VINYL BASE THIS AREA.
21. REMOVE EXISTING STAINLESS STEEL COOLER
22. EXISTING ICE MACHINE TO BE REMOVED RELOCATED.
23. REMOVE EXISTING CONCRETE BLOCK SEGMENTS.
24. REMOVE EXISTING DANCE FLOOR IF ADDITIVE ALTERNATE #1 IS SELECTED
25. PROVIDE TEMPORARY BARRIER DURING CONSTRUCTION.
26. EXISTING WALKWAY COVER TO REMAIN.

CITY OF TAMPA
CONTRACT ADMINISTRATION DEPARTMENT
PLANNING AND DESIGN DIVISION

306 E. JACKSON STREET 4 NORTH
TAMPA, FLORIDA 33602
p: 813. 274. 8456 – f: 813. 274. 8080
url: www.tampagov.net

James E. Jackson, Jr. AIA, NOMA
City Architect

Edward D. Rice, AIA
Project Architect

Kevin L. Henika, AIA
Project Architect

Thomas A. Hester, Sr., AIA, NOMA
Project Architect

Kinsey C. Tillman
Drafting Technician

Jerry P. Sanders
Drafting Technician

Byron K. Thomas, LEED GA
Drafting Technician

MEP CONSULTANT
HALL ENGINEERING GROUP
14499 N. DALE MABRY HWY #179
TAMPA, FLORIDA 33618
(813) 374-2121

STRUCTURAL CONSULTANT
BROADWAY ENGINEERING
1335 W. CASS ST.
TAMPA, FLORIDA 33606
(813) 251-9244 FAX (813) 251-9330

CIVIL CONSULTANT
MILLS AND ASSOCIATES, INC.
3242 HENDERSON BOULEVARD
SUITE 300
TAMPA, FLORIDA 33609
(813) 876-5869

LANDSCAPE CONSULTANT

WAYNE C. PAPY CENTER
ADDITION AND RENOVATION
6925 N. FLORIDA AVENUE
TAMPA, FLORIDA 33604

FILE NUMBER
X

PROJECT NUMBER
X

ISSUE DATE
JUNE 30, 20015

DRAWN BY
JERRY P. SANDERS

REVISIONS

PROFESSIONAL SEAL
THOMAS HESTER, AIA, NOMA

X

SCALE: 1'=1'-0"

DEMOLITION FLOOR PLAN

SHEET NUMBER
A 2.1

X OF X

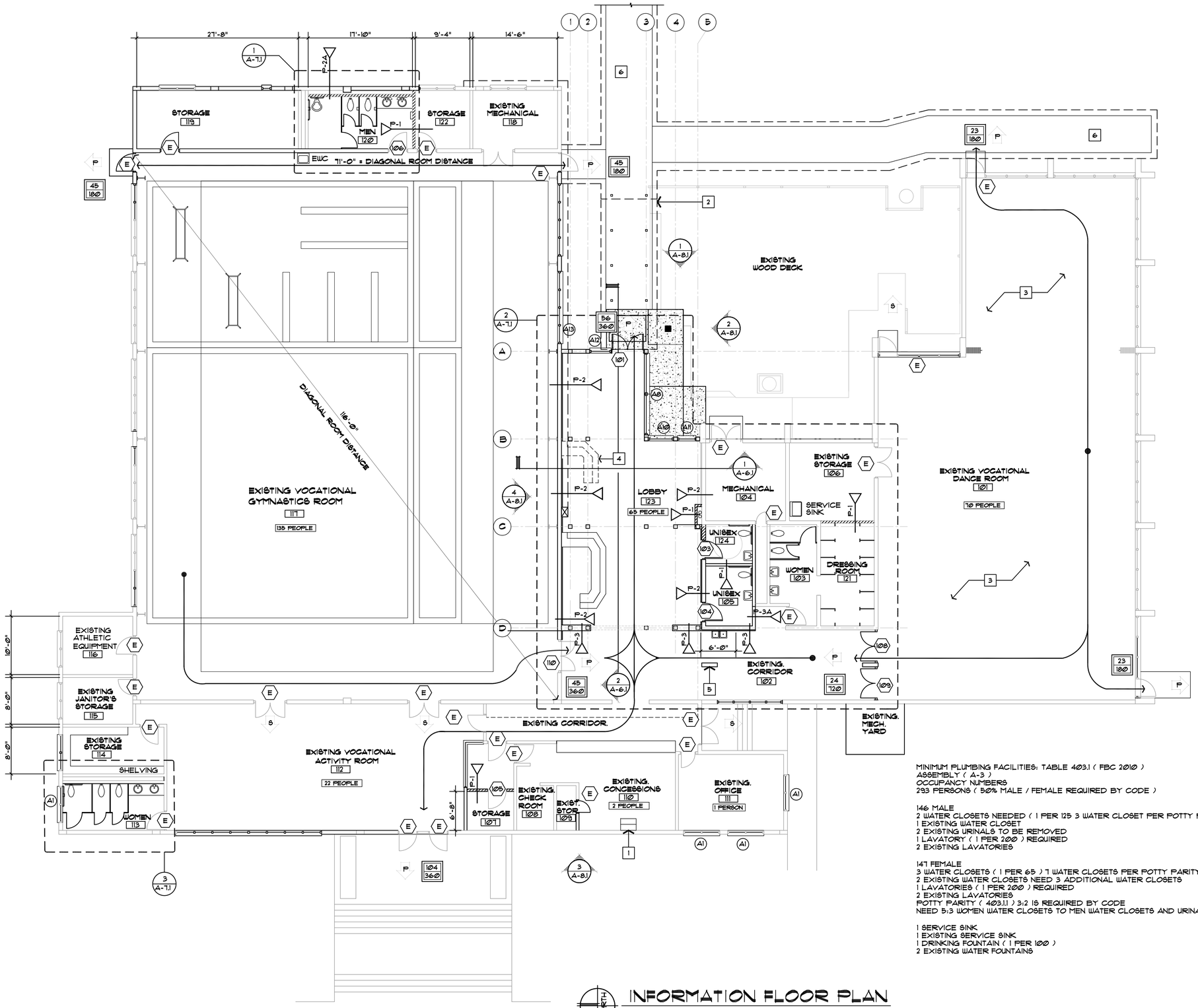

MINIMUM PLUMBING FACILITIES: TABLE 403.1 (FBC 2010)
ASSEMBLY (A-3)
OCCUPANCY NUMBERS
293 PERSONS (50% MALE / FEMALE REQUIRED BY CODE)

146 MALE
2 WATER CLOSETS NEEDED (1 PER 125 3 WATER CLOSET PER POTTY PARTY)
1 EXISTING WATER CLOSET
2 EXISTING URINALS TO BE REMOVED
1 LAVATORY (1 PER 200) REQUIRED
2 EXISTING LAVATORIES

147 FEMALE
3 WATER CLOSETS (1 PER 65) 7 WATER CLOSETS PER POTTY PARITY
2 EXISTING WATER CLOSETS NEED 3 ADDITIONAL WATER CLOSETS
1 LAVATORIES (1 PER 200) REQUIRED
2 EXISTING LAVATORIES
POTTY PARITY (403.1.1) 3:2 IS REQUIRED BY CODE
NEED 5:3 WOMEN WATER CLOSETS TO MEN WATER CLOSETS AND URINALS

1 SERVICE SINK
1 EXISTING SERVICE SINK
1 DRINKING FOUNTAIN (1 PER 100)
2 EXISTING WATER FOUNTAINS

INFORMATION FLOOR PLAN

SCALE 1/8" = 1'-0"

GENERAL NOTES

KEY NOTES

1. RELOCATED ICE MACHINE.
2. NEW WALK WAY COVER (APPROXIMATELY 28 L.F.).
3. INSTALL 3300 SF OF NEW DANCE FLOOR SIMILAR TO EXISTING FLOOR ADDITIVE ALTERNATE #1
4. TEMPORARY DESK FOR VOLUNTEERS. SEE GENERAL NOTES 2 & 3 SHEET A1.0.1
5. EXISTING COLUMN.
6. EXISTING WALK.

LIFE SAFETY INFORMATION

EXISTING VOCATIONAL GYMNASTICS ROOM
6,744 SF / 50 NET SF PER PERSON
PER PERSON =135 PERSONS

EXISTING VOCATIONAL DANCE ROOM
3471 SF / 50 NET SF. PER PERSON
=70 PERSONS

LOBBY
969 SF / 15 NET SF
PER PERSON =65 PERSONS

EXISTING VOCATIONAL ACTIVITY LOBBY
1,129SF / 50 NET SF PER PERSON=22 PERSONS

OCCUPANCY

OCCUPANT LOAD — 00 PEOPLE

ACTUAL OCCUPANT LOAD

MAXIMUM OCCUPANT LOAD PER SBCCI AND NFPA 101

PRIMARY EXIT — P

SECONDARY EXIT — S

CODE REFERENCES

FLORIDA BUILDING CODE LATEST ed.

NFPA 101 LATEST ed.

ASSEMBLY SPACE = 15 s.f. / PERSON

ASSEMBLY SPACE = (GYMNASIUM) 18" WIDTH / PERSON

CLASSROOM SPACE = 20 s.f. / PERSON

CITY OF TAMPA
CONTRACT ADMINISTRATION DEPARTMENT
PLANNING AND DESIGN DIVISION

306 E. JACKSON STREET 4 NORTH
TAMPA, FLORIDA 33602
p: 813. 274. 8456 – f: 813. 274. 8080
url: www.tampagov.net

James E. Jackson, Jr. AIA, NOMA
City Architect

Edward D. Rice, AIA
Project Architect

Kevin L. Hendica, AIA
Project Architect

Thomas A. Hester, Sr., AIA, NOMA
Project Architect

Kinsey C. Tillman
Drafting Technician

Jerry P. Sanders
Drafting Technician

Byron K. Thomas, LEED GA
Drafting Technician

MEP CONSULTANT

STRUCTURAL CONSULTANT

CIVIL CONSULTANT

LANDSCAPE CONSULTANT

WAYNE C. PAPY CENTER
ADDITION AND RENOVATION
6925 N. FLORIDA AVENUE
TAMPA, FLORIDA 33604

FILE NUMBER
X

PROJECT NUMBER
X

ISSUE DATE
JUN 30, 2015

DRAWN BY
JERRY P. SANDERS

REVISIONS

PROFESSIONAL SEAL
THOMAS HESTER, AIA, NOMA

X

SCALE: 1"=1'-0"

INFOMATION FLOOR PLAN

SHEET NUMBER
A 2.2

X OF X

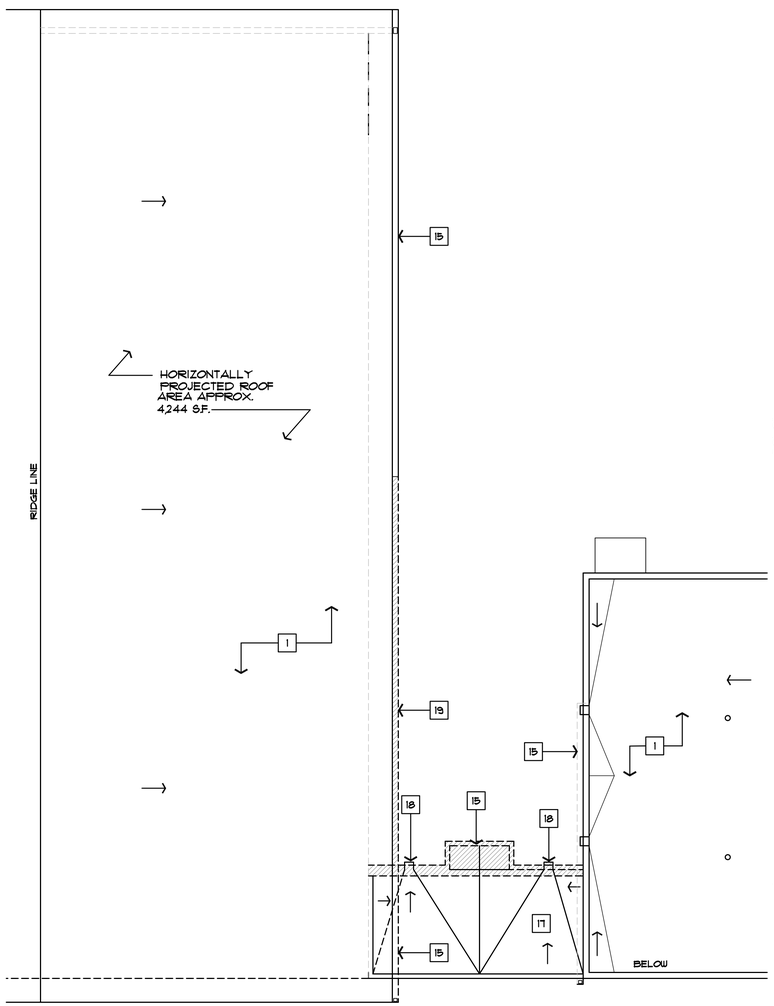

DEMO ROOF PLAN

SCALE 1/8" = 1'-0"

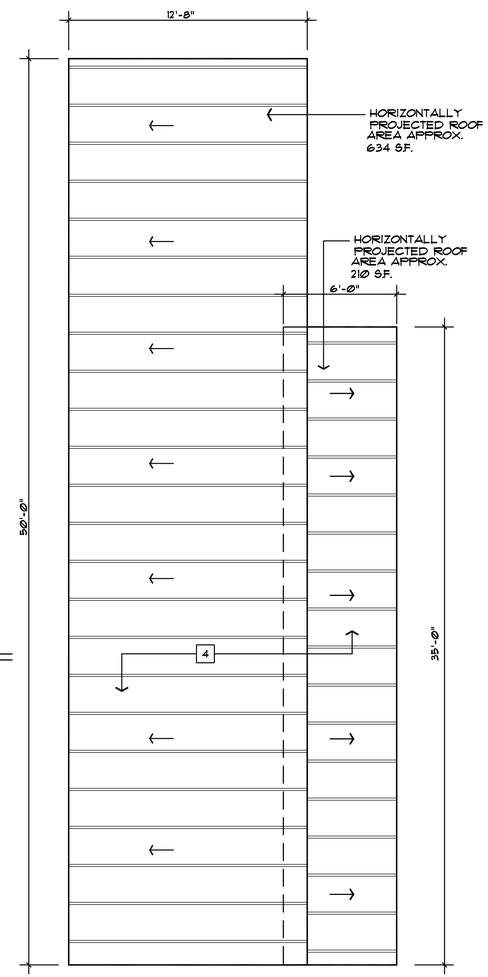

STANDING METAL SEAM ROOF PLAN

SCALE 1/4" = 1'-0"

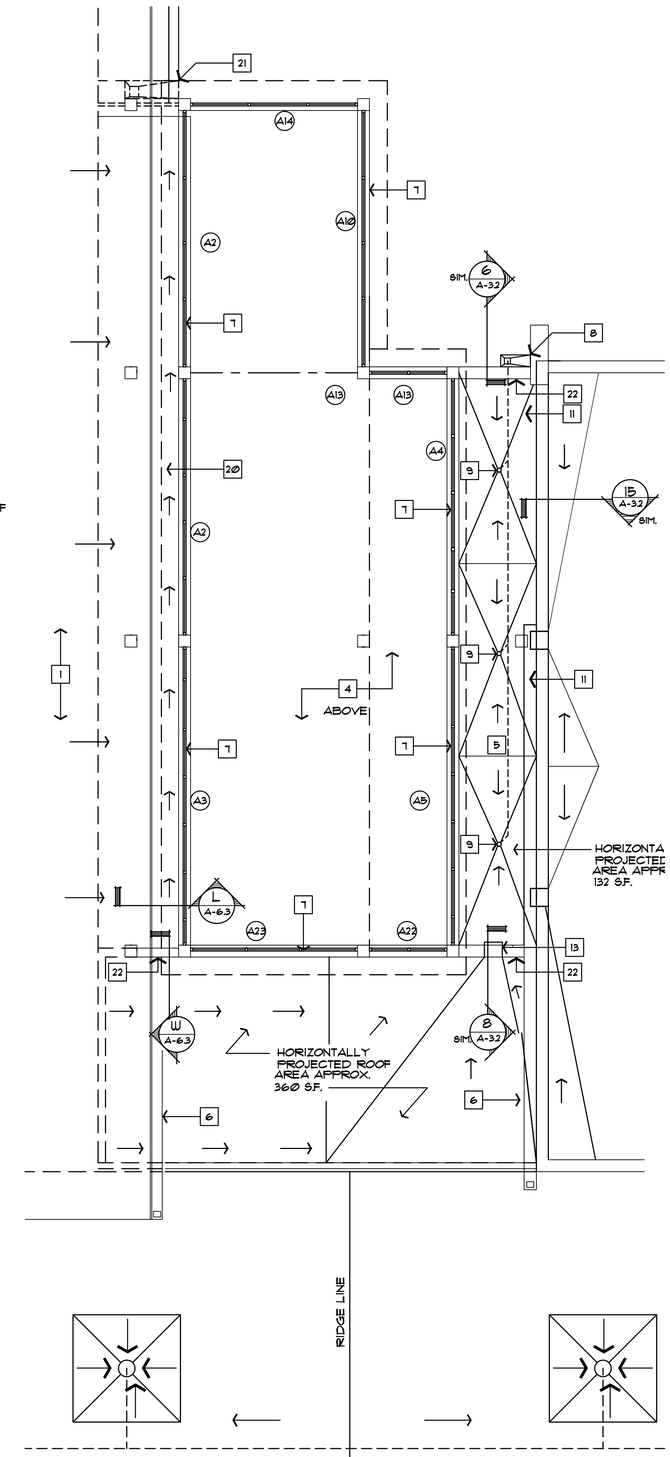

DETAIL ROOF PLAN

SCALE 1/4" = 1'-0"

GENERAL NOTES

RAIN FALL RATE 4.5 INCHES PER HOUR TAMPA FLORIDA.

PER APPENDIX B
FLORIDA PLUMBING CODE 2010

ALL CIRCULAR VERTICAL LEADERS AND CONDUCTORS SIZED PER TABLE 1106.2(1)

ALL RECTANGULAR VERTICAL LEADERS AND CONDUCTORS SIZED PER TABLE 1106.2(2)

KEY NOTES

1. EXISTING GYMNASIUM ROOF
2. EXISTING LOBBY ROOF
3. EXISTING ACTIVITY ROOM ROOF
4. NEW STANDING SEAM METAL ROOFING
5. NEW ROOF
6. EXISTING ROOF GUTTER TO REMAIN (8" WIDE x 10" DEEP)
7. ALUMINUM CURTAIN WALL W/ 9/16" TINTED TEMPERED GLASS
8. NEW 2'-4" x 1'-4" x 10 1/2" CONDUCTOR HEAD AND 5 1/4" x 3 3/4" RECTANGULAR DOWN SPOUT.
9. NEW ROOF DRAIN.
10. GYPSUM BOARD ON 8" STRUCTURAL. STEEL STUDS @ 18" O.C. AND INSULATION.
11. PIPING FROM ROOF DRAIN TO GUTTER.
12. SBS MODIFIED BITUMEN ROOF ON MIN. 1½" RIGID INSULATION 1½" METAL DECK AND STEEL BAR JOISTS.
13. NEW ROOF SCUPPER.
14. REMOVE EXISITING ROOF GUTTER
15. EXISTING GUTTER TO REMAIN.
16. REMOVE EXISTING ROOFING DOWN TO CANT STRIP.
17. EXISITING ROOF
18. REMOVE EXISTING SCUPPER.
19. REMOVE APPROXIMATELY 48 LF OF EXISTING GUTTER.
20. NEW STAINLESS STEEL ROOF GUTTER
21. NEW 12" X 9" X 6" CONDUCTOR HEAD AND 3" x 2" RECTANGULAR DOWNSPOUT
22. METAL COPING AND FLASHING SIMILAR TO 6/ A3.2

CITY OF TAMPA
CONTRACT ADMINISTRATION DEPARTMENT
PLANNING AND DESIGN DIVISION

306 E. JACKSON STREET 4 NORTH
TAMPA, FLORIDA 33602
p. 813. 274. 8456 – f. 813. 274. 8080
url: www.tampagov.net

James E. Jackson, Jr. AIA, NOMA
City Architect

Edward D. Rice, AIA
Project Architect

Kevin L. Hentke, AIA
Project Architect

Thomas A. Hester, Sr., AIA, NOMA
Project Architect

Kinsey C. Tillman
Drafting Technician

Jerry P. Sanders
Drafting Technician

Byron K. Thomas, LEED GA
Drafting Technician

MEP CONSULTANT
HALL ENGINEERING GROUP
14499 N. DALE MABRY HWY #175
TAMPA, FLORIDA 33618
(813) 374-2121

STRUCTURAL CONSULTANT
BROADWAY ENGINEERING
1335 W. CASS ST.
TAMPA, FLORIDA 33606
(813) 251-9244 FAX (813) 251-93

CIVIL CONSULTANT
MILLS AND ASSOCIATES, INC.
3242 HENDERSON BOULEVARD
SUITE 300
TAMPA, FLORIDA 33609
(813) 876-5869

LANDSCAPE CONSULTANT

WAYNE C. PAPY CENTER
ADDITION AND RENOVATION
6925 N. FLORIDA AVENUE
TAMPA, FLORIDA 33604

FILE NUMBER
X

PROJECT NUMBER
X

ISSUE DATE
JUNE 30, 2015

DRAWN BY
JERRY P. SANDERS

REVISIONS

PROFESSIONAL SEAL
THOMAS HESTER, AIA, NOMA

X

SCALE: AS SHOWN

ROOF PLANS DETAILS

SHEET NUMBER
A 3.1

X OF X

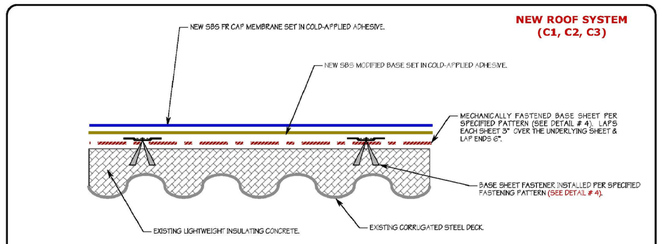

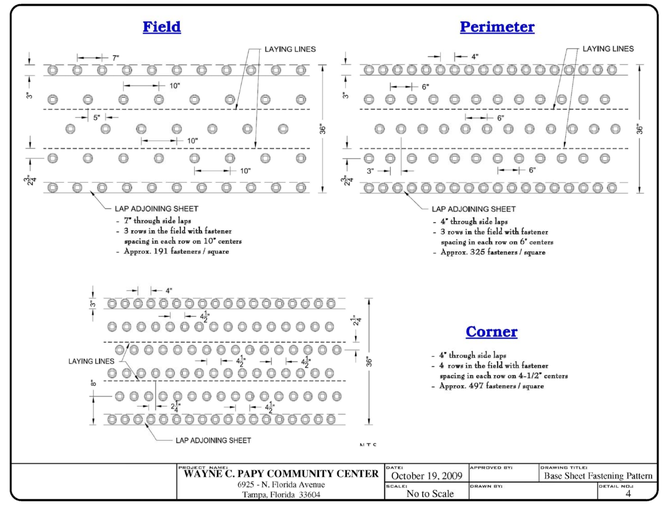

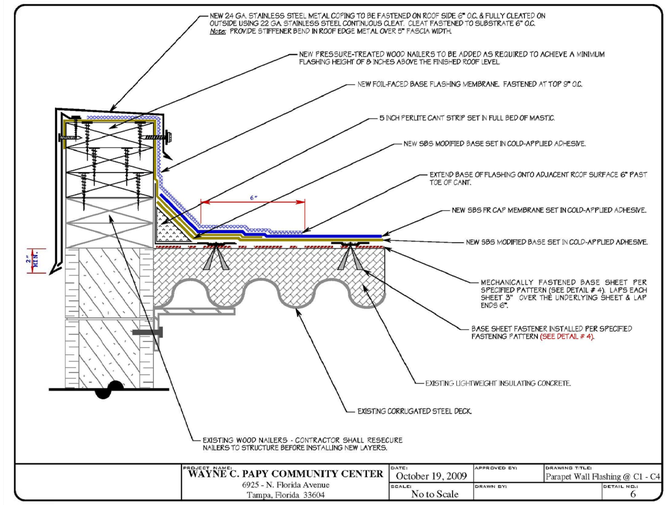

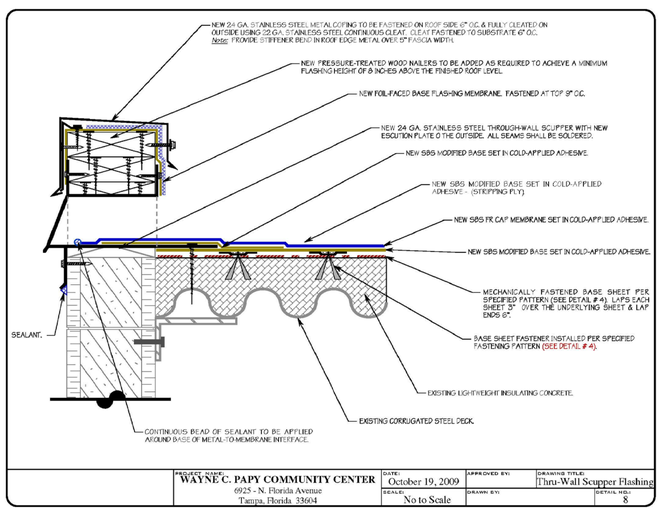

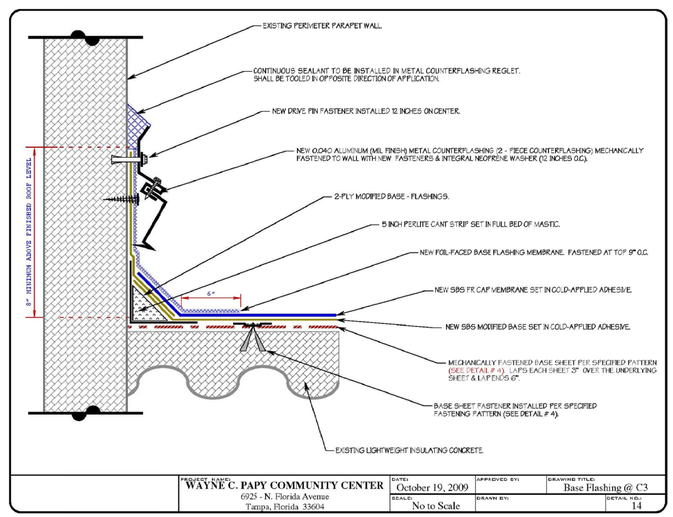

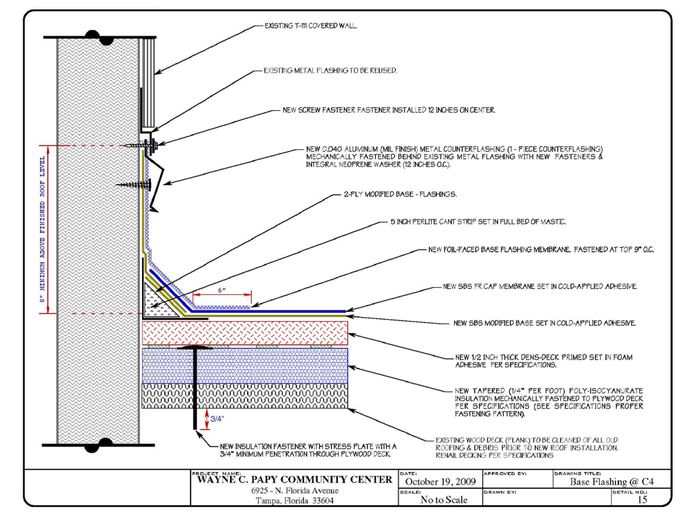

CITY OF TAMPA
CONTRACT ADMINISTRATION DEPARTMENT
PLANNING AND DESIGN DIVISION

306 E. JACKSON STREET 4 NORTH
TAMPA, FLORIDA 33602
p. 813. 274. 8456 – f. 813. 274. 8080
url: www.tampagov.net

James E. Jackson, Jr. AIA, NOMA
City Architect

Edward D. Rice, AIA
Project Architect

Kevin L. Herrlica, AIA
Project Architect

Thomas A. Hester, Sr., AIA, NOMA
Project Architect

Kinsey C. Tillman
Drafting Technician

Jerry P. Sanders
Drafting Technician

Byron K. Thomas, LEED GA
Drafting Technician

MEP CONSULTANT

STRUCTURAL CONSULTANT

CIVIL CONSULTANT

LANDSCAPE CONSULTANT

WAYNE C. PAPY CENTER
ADDITION AND RENOVATION
6925 NORTH FLORIDA AVENUE
TAMPA, FLORIDA 33604

FILE NUMBER
x

PROJECT NUMBER
x

ISSUE DATE
JUNE 30, 2015

DRAWN BY
x

REVISIONS

PROFESSIONAL SEAL
THOMAS HESTER, AIA, NOMA

x

SCALE: 1'=1'-0"

ROOF DETAILS

SHEET NUMBER
A-3.2

x OF x

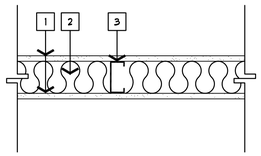

P-1 / A-4.1 PARTITION TYPE
SCALE 1 1/2" = 1'-0"

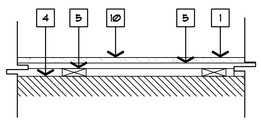

P-2A / A-4.1 P-2 / A-4.1 PARTITION TYPE
SCALE 1 1/2" = 1'-0"

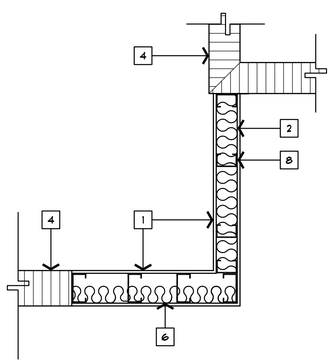

P-3A / A-4.1 P-3 / A-4.1 PARTITION TYPE
SCALE 3/4" = 1'-0"

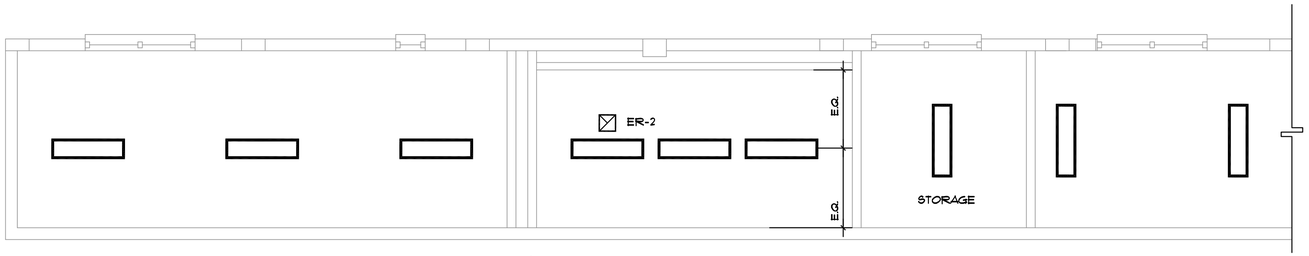

REFLECTED CEILING PLAN
SCALE 1/4" = 1'-0"

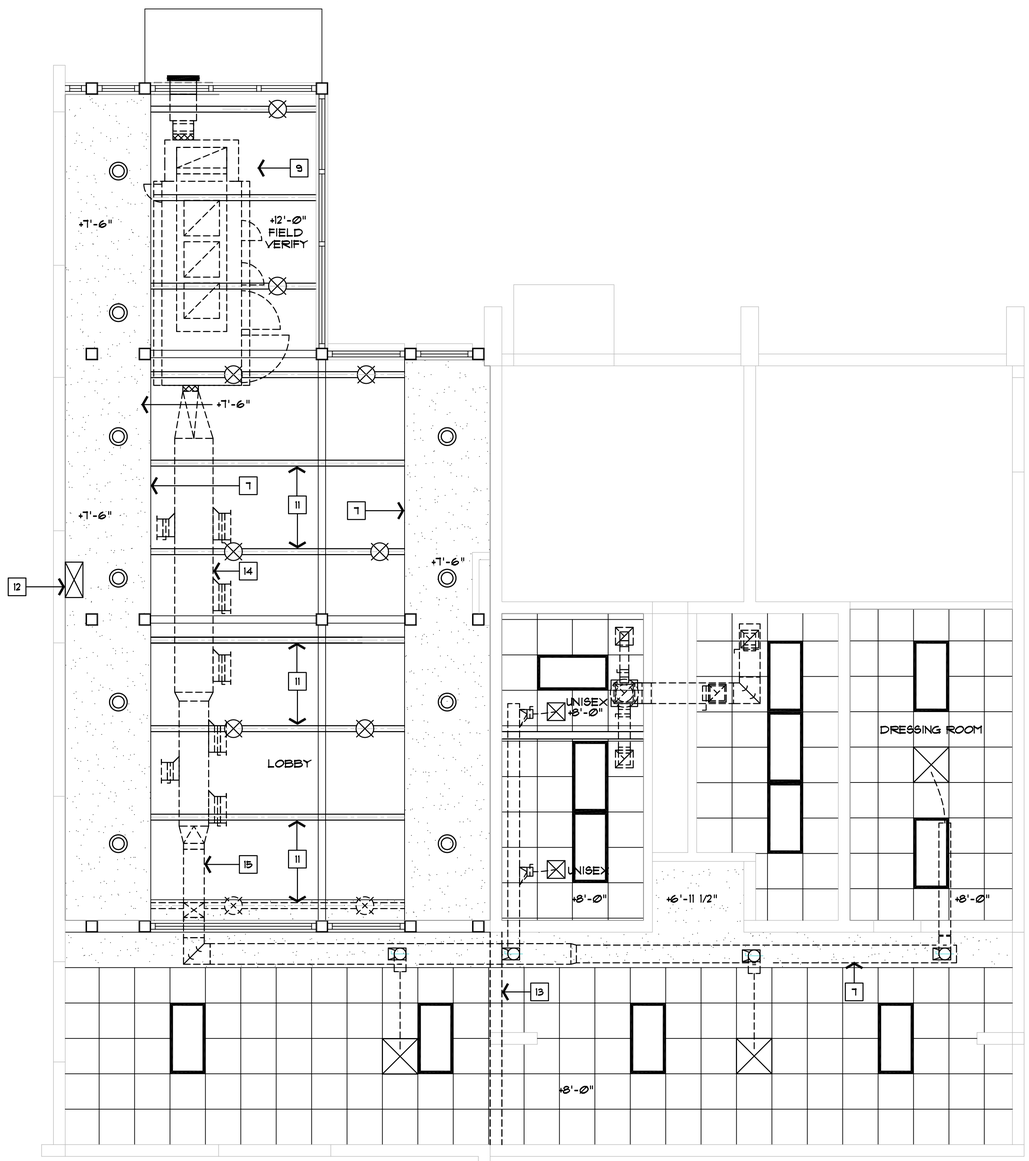

REFLECTED CEILING PLAN
SCALE 1/4" = 1'-0"

GENERAL NOTES

KEY NOTES

1. 5/8" MOISTURE RESISTANT GYPSUM BOARD PROVIDE IN ALL REST ROOMS
2. ACOUSTICAL BATT INSULATION
3. 3 5/8 METAL STUDS @ 16" O.C.
4. EXISITNG CONCRETE BLOCK WALL.
5. 1" x 2" PT WOOD FURRING @ 16" O.C. WITH 3/4" RIGID INSULATION IN FILL.
6. 8" METAL STUDS @ 16" O.C.
7. 1/2" GYPSUM BOARD SOFFIT, PAINTED
8. FOR P-3A , PROVIDE 6" METAL STUDS @ 16" O.C. WITH 5/8" GYPSUM BOARD EACH SIDE.
9. SHEET METAL AUXILIARY DRAIN PAN. 2" DEEP, PAINTED COLOR TO BE DETERMINED BY ARCHITECT.
10. FOR P-2A, PROVIDE 3 5/8" METAL STUDS @ 16" O.C. WITH 5/8" GYPSUM BOARD OVER EXISTING WALL AND JOIST.
11. RADIUSED JOIST ABOVE.
12. EXISTING CHILLED WATER PIPING ENCLOSURE.
13. EXISTING CONCRETE BEAM BOTTOM OF BEAM ELEVATION AT 9'-0" AFF.
14. ROUND DUCTWORK ABOVE ,PAINTED.
15. RECTANGULAR TRASITION DUCTWORK ABOVE ,PAINTED

LEGEND

- 2 x 4 FLUORESCENT LIGHT
- 6" DOWN LIGHT
- 6" PENDANT CYLINDER
- 1 x 4 FLUORESCENT LIGHT SURFACE MOUNT TO EXISTING CEILING
- ER-2 — 16" X 10" EXHAUST FAN GRILL
- ER-1 — 8" x 8" EXHAUST FAN
- 2 x 4 SUSPENDED CEILING SYSTEM
- GYPSUM BOARD SUSPENDED CEILING

CITY OF TAMPA
CONTRACT ADMINISTRATION DEPARTMENT
PLANNING AND DESIGN DIVISION
306 E. JACKSON STREET 4 NORTH
TAMPA, FLORIDA 33602
p: 813. 274. 8456 – f: 813. 274. 8080
url: www.tampagov.net

James E. Jackson, Jr. AIA, NOMA
City Architect
Edward D. Rice, AIA
Project Architect
Kevin L. Hendica, AIA
Project Architect
Thomas A. Hester, Sr., AIA, NOMA
Project Architect
Kinsey C. Tillman
Drafting Technician
Jerry P. Sanders
Drafting Technician
Byron K. Thomas, LEED GA
Drafting Technician

MEP CONSULTANT
HALL ENGINEERING GROUP
14499 N. DALE MABRY HWY #179
TAMPA, FLORIDA 33618
(813) 374-2121

STRUCTURAL CONSULTANT
BROADWAY ENGINEERING
1335 W. CASS ST.
TAMPA, FLORIDA 33606
(813) 251-9244 FAX (813) 251-9330

CIVIL CONSULTANT
MILLS AND ASSOCIATES, INC.
3242 HENDERSON BOULEVARD
SUITE 300
TAMPA, FLORIDA 33609
(813) 876-5869

LANDSCAPE CONSULTANT

WAYNE C. PAPY CENTER
ADDITION AND RENOVATION
6925 N. FLORIDA AVENUE
TAMPA, FLORIDA 33604

FILE NUMBER
X

PROJECT NUMBER
X

ISSUE DATE
JUNE 30, 2015

DRAWN BY
JERRY P. SANDERS

REVISIONS

PROFESSIONAL SEAL
THOMAS HESTER, AIA, NOMA

X

SCALE: 1'=1'-0"

REFLECTED CEILING PLAN

SHEET NUMBER
A 4.1

X OF X

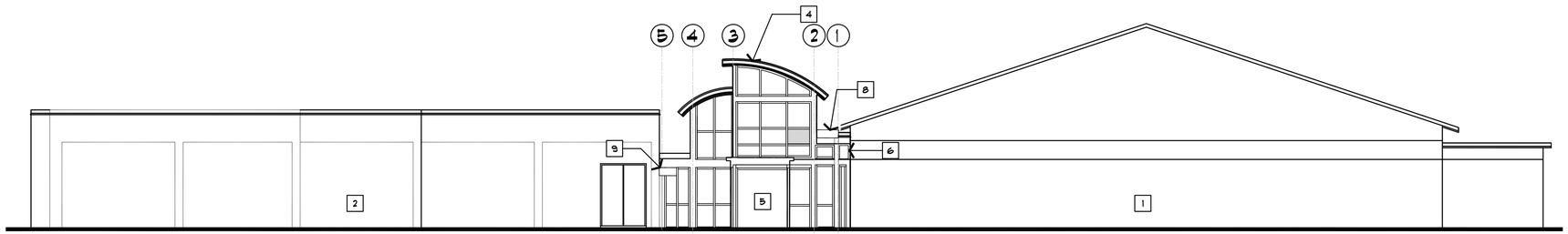

1 A-4.1 EAST ELEVATION
SCALE 1/8" = 1'-0"

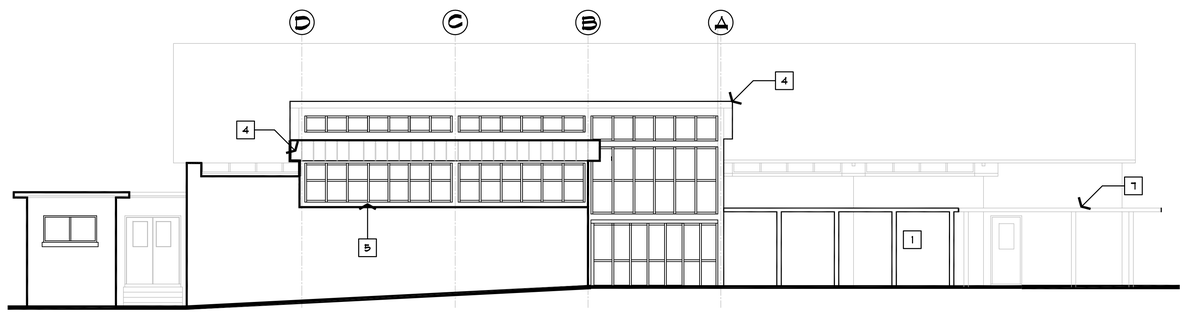

2 A-4.1 SOUTH ELEVATION
SCALE 1/8" = 1'-0"

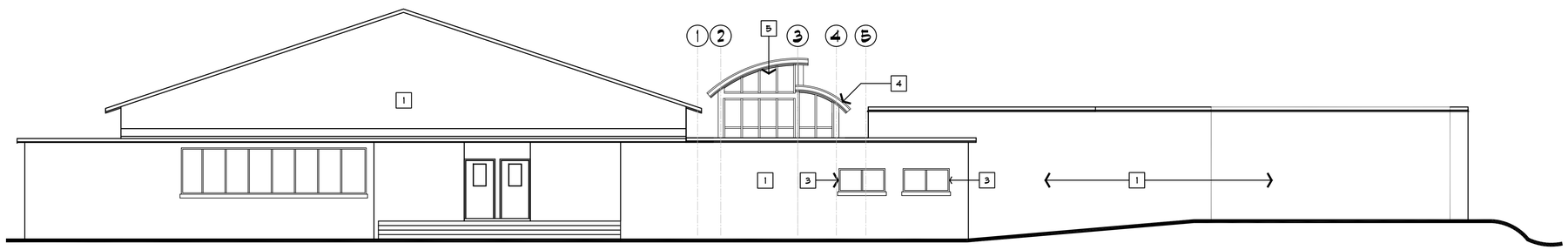

3 A-4.1 WEST ELEVATION
SCALE 1/8" = 1'-0"

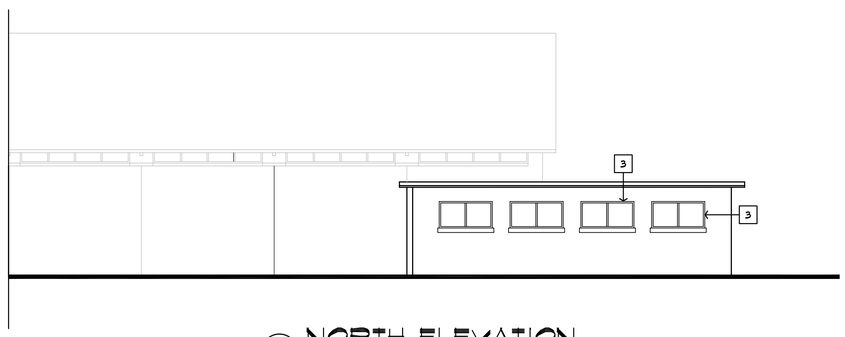

4 A-4.1 NORTH ELEVATION
SCALE 1/8" = 1'-0"

GENERAL NOTES

KEY NOTES

1. EXISTING BUILDING TO REMAIN.
2. NEW ALUMINUM WALKWAY COVER
3. NEW STOREFRONT WINDOW SEE SHEET SHEET A 8.2.
4. STANDING SEAM METAL ROOF
5. ALUMINUM CURTAIN WALL WITH GLASS INFILL
6. EXISTING 17"x13" CHILLED WATER ENCLOSURE
7. EXISITNG ALUMINUM WALKWAY COVER. TO MATCH EXISTING.
8. 36"x18"x12" CONDUCTOR HEAD W/ 6"x6" DOWNSPOUT.
9. 20"x20"x8" CONDUCTOR HEAD W/ 4"x4" DOWNSPOUT.

CITY OF TAMPA
CONTRACT ADMINISTRATION DEPARTMENT
PLANNING AND DESIGN DIVISION

305 E. JACKSON STREET 4 NORTH
TAMPA, FLORIDA 33602
p: 813. 274. 8455 – f: 813. 274. 8080
url: www.tampagov.net

James E. Jackson, Jr. AIA, NOMA
City Architect

Edward D. Rice, AIA
Project Architect

Kevin L. Henika, AIA
Project Architect

Thomas A. Hester, Sr., AIA, NOMA
Project Architect

Kinsey C. Tillman
Drafting Technician

Jerry P. Sanders
Drafting Technician

Byron K. Thomas, LEED GA
Drafting Technician

MEP CONSULTANT
HALL ENGINEERING GROUP
14498 N. DALE MABRY HWY #178
TAMPA, FLORIDA 33618
(813) 374-2121

STRUCTURAL CONSULTANT
BROADWAY ENGINEERING
1335 W. CASS ST.
TAMPA, FLORIDA 33606
(813) 251-9244 FAX (813) 251-9330

CIVIL CONSULTANT
MILLS AND ASSOCIATES, INC.
3242 HENDERSON BOULEVARD
SUITE 300
TAMPA, FLORIDA 33609
(813) 876-5869

LANDSCAPE CONSULTANT

WAYNE C. PAPY CENTER
ADDITION AND RENOVATION
6925 N. FLORIDA AVENUE
TAMPA, FLORIDA 33604

FILE NUMBER
x

PROJECT NUMBER
x

ISSUE DATE
JUNE 30, 2015

DRAWN BY
JERRY P. SANDERS

REVISIONS

PROFESSIONAL SEAL
THOMAS HESTER, AIA, NOMA

x

SCALE: 1'=1'-0"

EXTERIOR ELEVATION

SHEET NUMBER
A 5.1

x OF x

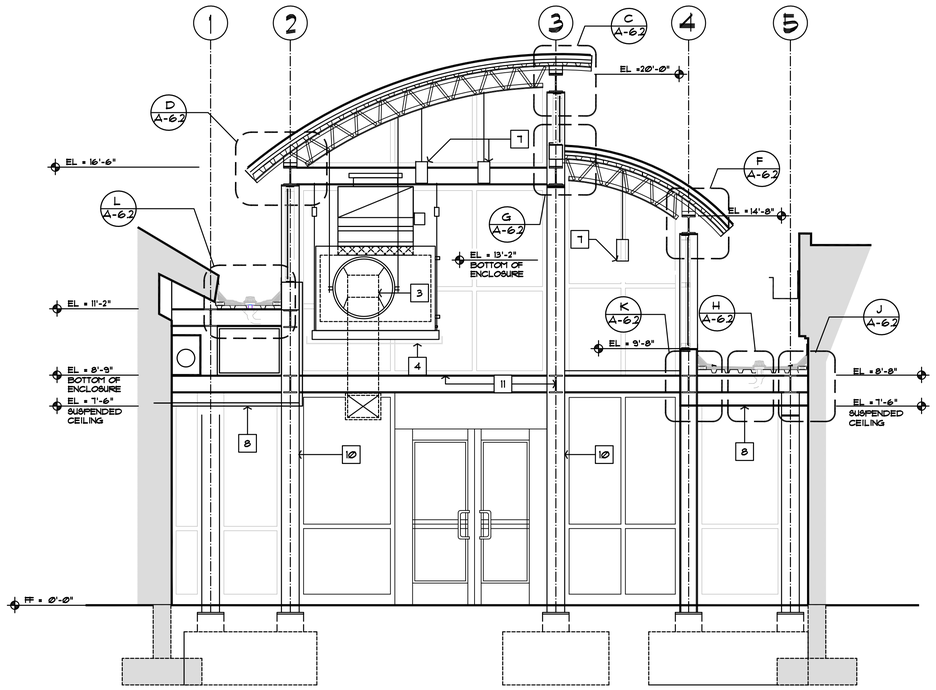

1 A-6.1 EAST BUILDING SECTION
SCALE 3/8" = 1'-0"

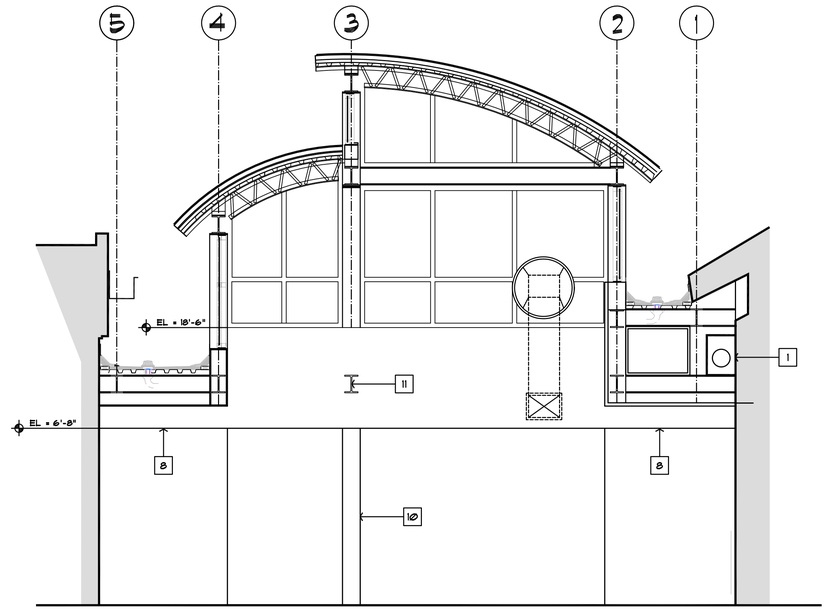

2 A-6.1 WEST BUILDING SECTION
SCALE 3/8" = 1'-0"

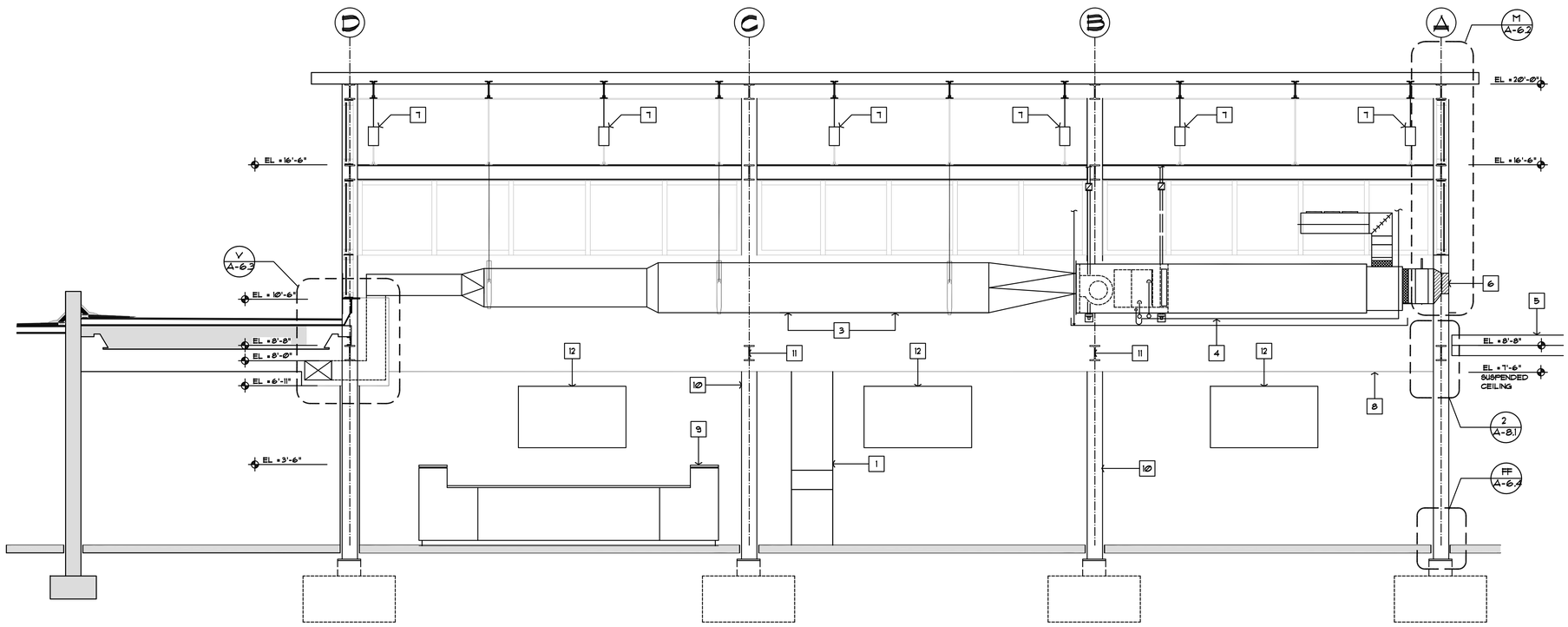

3 A-6.1 NORTH BUILDING SECTION
SCALE 3/8" = 1'-0"

GENERAL NOTES

KEY NOTES

1. EXISTING CHILLED WATER PIPING ENCLOSURE, PAINTED.
2. NEW FAN COIL UNIT
3. NEW CIRCULAR DUCTWORK
4. NEW AUXILIARY DRAIN PAN, PAINTED
5. NEW COVERED WALKWAY.
6. OUTSIDE AIR LOUVER IN CURTAIN WALL.
7. NEW PENDANT LIGHTING
8. SUSPENDED GYPSUM BOARD SOFFIT, PAINTED.
9. NEW RECEPTION DESK.
10. STEEL COLUMN, PAINTED
11. STEEL BEAM, PAINTED
12. PROPOSED MONITORS.

CITY OF TAMPA
CONTRACT ADMINISTRATION DEPARTMENT
PLANNING AND DESIGN DIVISION
306 E. JACKSON STREET 4 NORTH
TAMPA, FLORIDA 33602
p: 813. 274. 8456 – f: 813. 274. 8080
url: www.tampagov.net

James E. Jackson, Jr. AIA, NOMA
City Architect
Edward D. Rice, AIA
Project Architect
Kevin L. Hanka, AIA
Project Architect
Thomas A. Hester, Sr., AIA, NOMA
Project Architect
Kinsey C. Tillman
Drafting Technician
Jerry P. Sanders
Drafting Technician
Byron K. Thomas, LEED GA
Drafting Technician

MEP CONSULTANT
HALL ENGINEERING GROUP
14499 N. DALE MABRY HWY #179
TAMPA, FLORIDA 33618
(813) 374-2121

STRUCTURAL CONSULTANT
BROADWAY ENGINEERING
1335 W. CASS ST.
TAMPA, FLORIDA 33606
(813) 251-9244 FAX (813) 251-9330

CIVIL CONSULTANT
MILLS AND ASSOCIATES, INC.
3242 HENDERSON BOULEVARD
SUITE 300
TAMPA, FLORIDA 33609
(813) 876-5869

LANDSCAPE CONSULTANT

WAYNE C. PAPY CENTER
ADDITION AND RENOVATION
6925 N. FLORIDA AVENUE
TAMPA, FLORIDA 33604

FILE NUMBER
X

PROJECT NUMBER
X

ISSUE DATE
JUNE 30, 2015

DRAWN BY
JERRY P. SANDERS

REVISIONS

PROFESSIONAL SEAL
THOMAS HESTER, AIA, NOMA

X

SCALE: 1"=1'-0"

BUILDING SECTIONS

SHEET NUMBER
A 6.1

X OF X

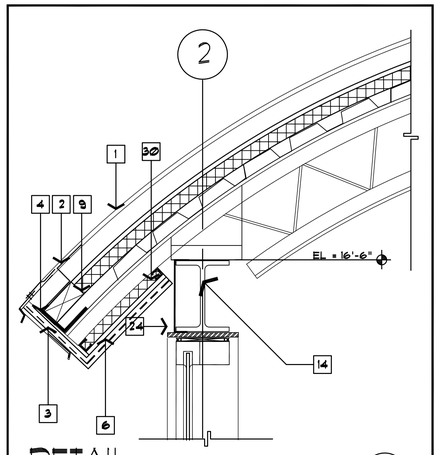

DETAIL D
SCALE: 1½"=1'-0"

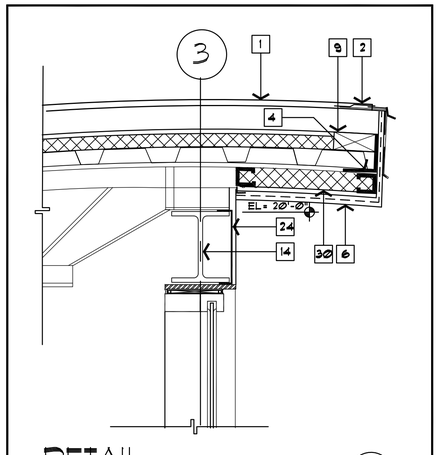

DETAIL C
SCALE: 1½" =1'-0"

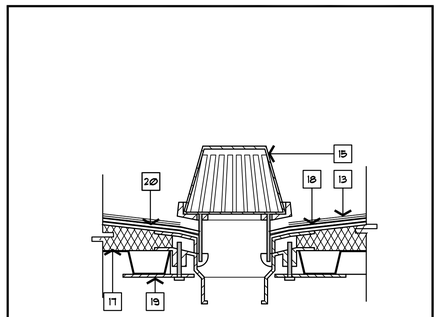

DETAIL H
SCALE: 3" =1'-0"

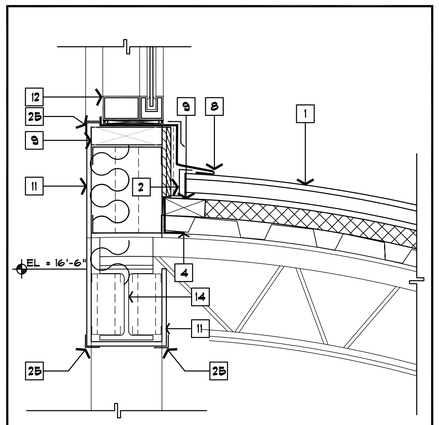

CLERESTORY SILL G
SCALE: 1-1/2" =1'-0"

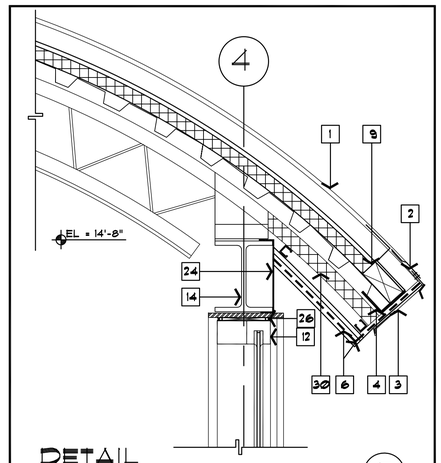

DETAIL F
SCALE: 1-½" =1'-0"

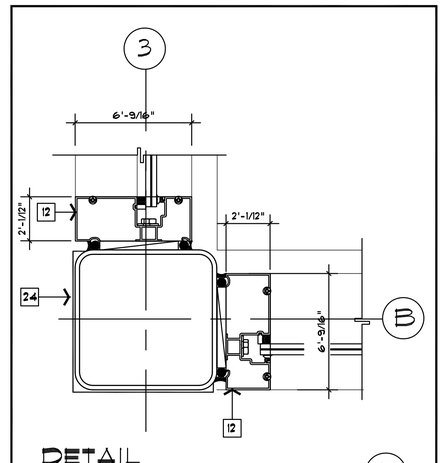

DETAIL E
SCALE: 3" =1'-0"

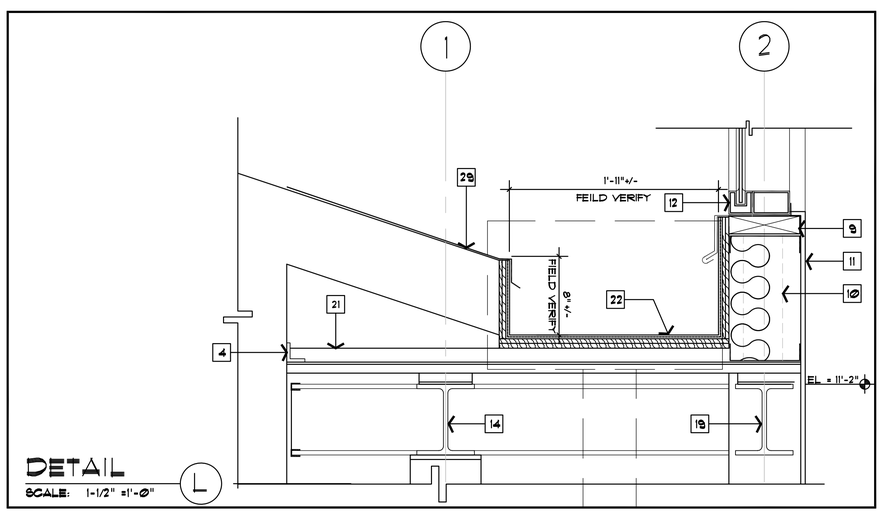

DETAIL L
SCALE: 1-1/2" =1'-0"

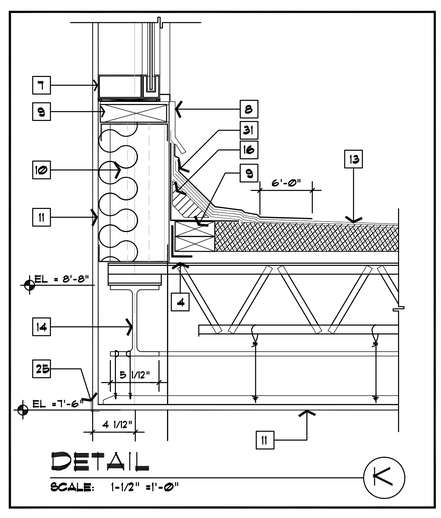

DETAIL K
SCALE: 1-1/2" =1'-0"

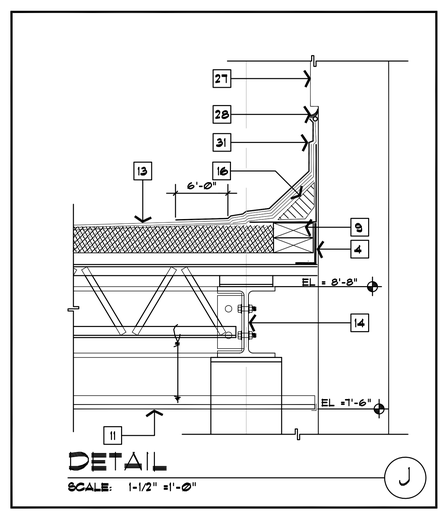

DETAIL J
SCALE: 1-1/2" =1'-0"

GENERAL NOTES

KEY NOTES

1. STANDING SEAM METAL ROOF ON ½" PLYWOOD NAILING SURFACE ON 1½" POLYISOCYNURATE INSULATION ON METAL DECK ON RADIUS JOISTS.
2. ZEE CLOSURE TRIM.
3. ALUMINUM EAVE TRIM
4. STEEL CLOSURE ANGLE
5. CONTINUOUS ALUMINUM CLEAT WITH NEO PRENE SEPARATION BETWEEN METALS
6. 24 GAUGE BRAKE METAL OVER PLYWOOD FASCIA AND SOFFIT OVER GRACE ICE AND WATER SHEILD WATER PROOFING.
7. CONTINUOUS CAULK
8. ALUMINUM COUNTER FLASHING - OVER 3/4" P.T. PLYWOOD, CONT.
9. P.T. 2X BLOCKING.
10. 8" METAL STUD FRAMING @ 16"OC W / R-30 INSULATION.
11. 1/2" GYPSUM BOARD
12. 2 1/2" x 6 9/16" ALUMINUM CURTAIN WALL WITH 9/16" TINT GLAZING.
13. SBS MODIFIED BITUMEN ROOF ON MIN. 1½" RIGID INSULATION 1½" METAL DECK AND STEEL BAR JOISTS.
14. STEEL BEAM SEE STRUCTURAL
15. 4" METAL ROOF DRAIN WITH CLAMPING RING AND CAST IRON DOME.
16. 4" FIBER CANT STRIP.
17. INSTALL 2 PLIES OF FIBERGLASS MAT AND 2 COURSES OF ROOF CEMENT AT THE JUNCTION OF THE FELTS AND DRAIN BOWL. LAP ONTO FELT 12" AND ONTO FLANGE OF DRAIN BOWL 3" MIN.
18. LEAD OR COPPER SHEET 36"X36".
19. UNDER DECK CLAMP (REQUIRED).
20. TWO PLIES OF FIBERGLASS FABRIC AND THREE COURSES OF ROOF CEMENT.
21. 1 1/2" METAL DECK ON STEEL BAR JOISTS
22. ALUMINUM GUTTER. FEEL AND STICK OVER P.T. CDX PLYWOOD.
23. MEDIUM STILE CURTAIN WALL DOORS WITH 1/4" TINTED TEMPERED GLASS.
24. 24 GAUGE BRAKE METAL OVER STEEL OVER STEEL COL.
25. CORNER BEAD
26. 1/2" SHIM
27. EXISING CONCRETE WALL
28. FLASHING W/ CAULK
29. ALUMINUM DRIP, REMOVED MINIMUM 24" OF EXISTING ASPHALT SHINGLES. REPLACE SHINGLES AFTER INSTALLATION.
30. 1 1/2" POLYISOCYNURATE FLASHING INSULATION
31. NEW FOIL- FACED FLASHING MEMBRANE AT TOP @ 9" O.C. SEE DETAILS 14 & 15 / A3.2 (SIMILAR)

CITY OF TAMPA
CONTRACT ADMINISTRATION DEPARTMENT
PLANNING AND DESIGN DIVISION
306 E. JACKSON STREET 4 NORTH
TAMPA, FLORIDA 33602
p: 813. 274. 8456 – f: 813. 274. 8080
url: www.tampagov.net

James E. Jackson, Jr. AIA, NOMA
City Architect
Edward D. Rice, AIA
Project Architect
Kevin L. Hendke, AIA
Project Architect
Thomas A. Hester, Sr., AIA, NOMA
Project Architect
Kinsey C. Tillman
Drafting Technician
Jerry P. Sanders
Drafting Technician
Byron K. Thomas, LEED GA
Drafting Technician

MEP CONSULTANT
HALL ENGINEERING GROUP
14499 N. DALE MABRY HWY #179
TAMPA, FLORIDA 33618
(813) 374-2121

STRUCTURAL CONSULTANT
BROADWAY ENGINEERING
1335 W. CASS ST.
TAMPA, FLORIDA 33606
(813) 251-9244 FAX (813) 251-9330

CIVIL CONSULTANT
MILLS AND ASSOCIATES, INC.
3242 HENDERSON BOULEVARD
SUITE 300
TAMPA, FLORIDA 33609
(813) 876-5868

LANDSCAPE CONSULTANT

WAYNE C. PAPY CENTER
ADA IMPROVEMENTS
6925 N. FLORIDA AVENUE
TAMPA, FLORIDA 33604

FILE NUMBER
X

PROJECT NUMBER
X

ISSUE DATE
JUNE 30, 2015

DRAWN BY
JERRY P. SANDERS

REVISIONS

PROFESSIONAL SEAL
THOMAS HESTER, AIA, NOMA

AR0091745

SCALE: AS SHOWN

DETAILS

SHEET NUMBER
A6.2

X OF X

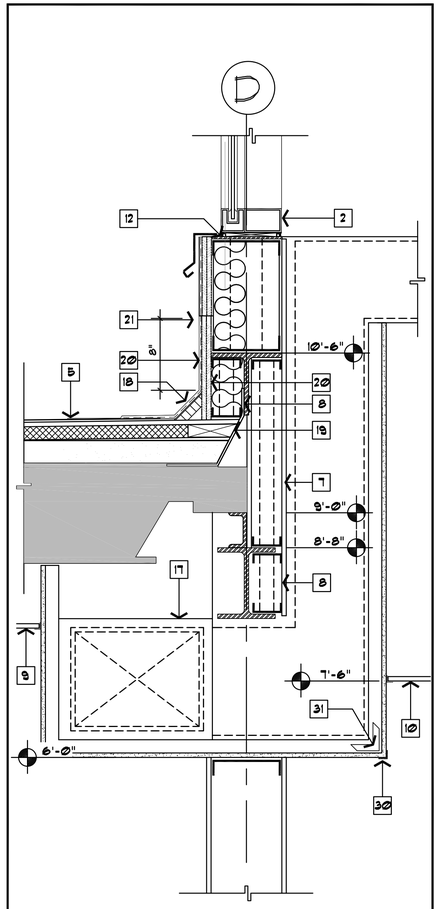

COPING AND SOFFIT
DETAIL AT Col. Line 2-3 (V)
SCALE: 1-1/2" =1'-0"

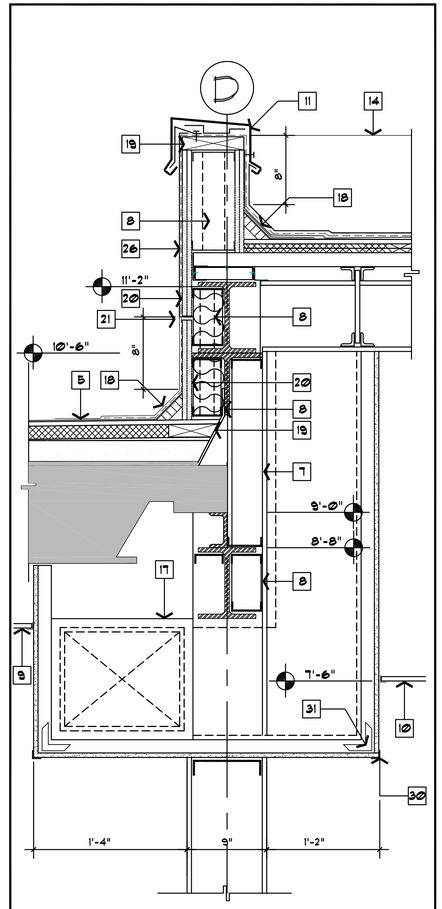

COPING AND SOFFIT
DETAIL AT Col. Line 1-2 (W)
SCALE: 1-1/2" =1'-0"

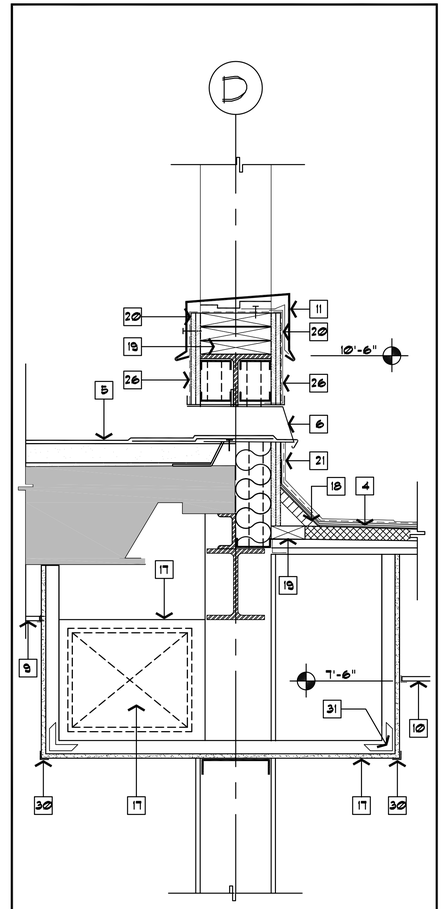

COPING AND SOFFIT
DETAIL AT Col. Line 4-5 (X)
SCALE: 1-1/2" =1'-0"

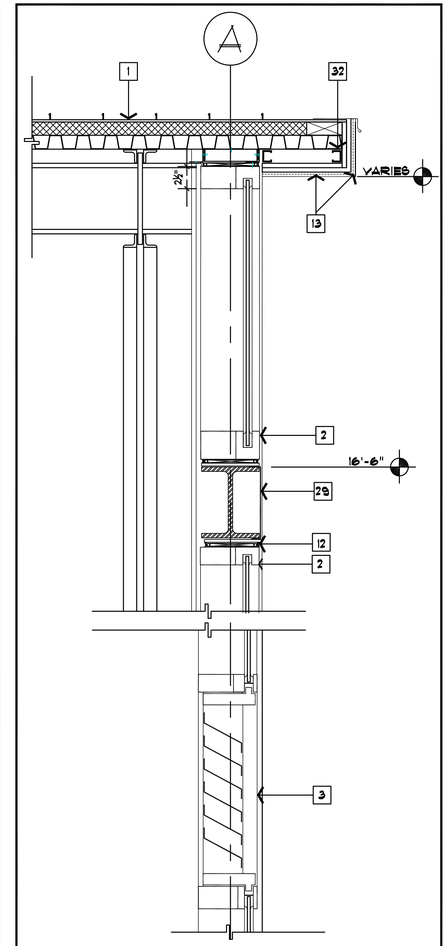

STOREFRONT HEADER (Y)
SCALE: 1-1/2" =1'-0"

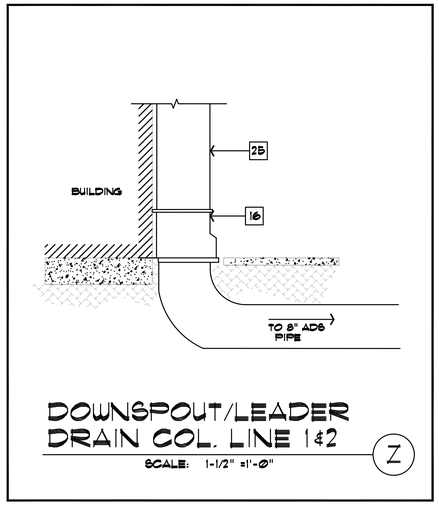

DOWNSPOUT/LEADER
DRAIN COL. LINE 1&2 (Z)
SCALE: 1-1/2" =1'-0"

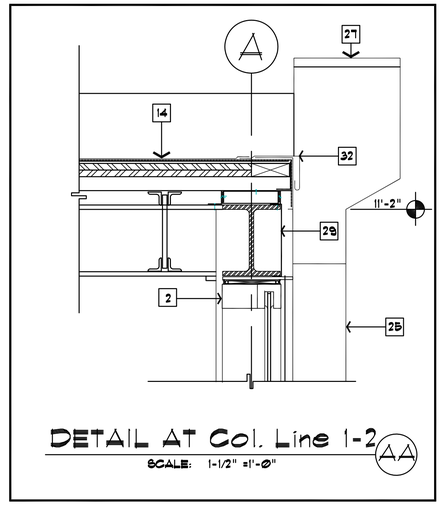

DETAIL AT Col. Line 1-2 (AA)
SCALE: 1-1/2" =1'-0"

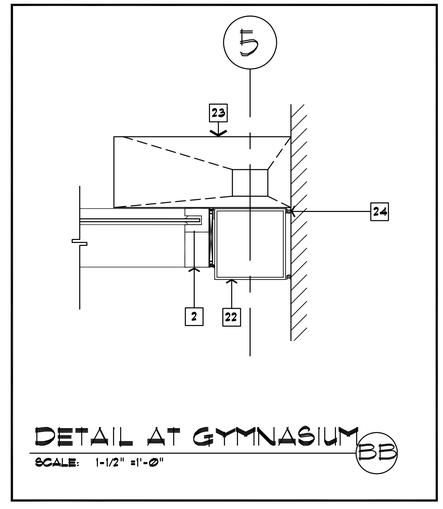

DETAIL AT GYMNASIUM (BB)
SCALE: 1-1/2" =1'-0"

GENERAL NOTES

KEY NOTES

1. STANDING SEAM METAL ROOF ON ½" PLYWOOD NAILING SURFACE ON 1½" POLYISOCYNURATE INSULATION ON METAL DECK ON RADIUS JOISTS.
2. 2½" x 6 9/16" CURTAIN WALL WITH 9/16" TINTED GLAZING.
3. OUTSIDE AIR LOUVER WITHIN CURTAIN WALL SYSTEM.
4. SBS BITUMEN ROOF ON MIN. 1½" RIGID INSULATION 1½" METAL DECK AND STEEL BAR JOISTS.
5. SBS BITUMEN ROOF OVER NEW POURED LIGHT WEIGHT CONCRETE OVER EXISTING ROOF STRUCTURE.
6. NEW 24 GA. STAINLESS STEEL THROUGH WALL SCUPPER WITH NEW ESCUTCHEON PLATE TO THE OUT SIDE. ALL SEAMS TO BE SOLDERED SEE 8/A 3.2 (SIM.)
7. ⅝" GYPSUM BOARD.
8. 3⅝" METAL FRAMING.
9. EXISTING SUSPENDED CEILING.
10. NEW SUSPENDED GYPSUM BOARD CEILING.
11. NEW 24 GA STAINLESS STEEL COPING TO BE FASTENED ON ROOF SHOE 8" O.C. AND FULLY SEALED ON OUTSIDE USING 22 GAUGE STAINLESS STEEL CONTINUOUS CLEAT FASTENED TO SUBSTRUCTURE 6" O.C.
12. ½" SHIM
13. 24 GAUGE BRAKE METAL OVER PLYWOOD FASCIA AND SOFFIT OVER GRACE ICE AND WATER SHIELD WATER PROOFING
14. NEW STAINLESS STEEL GUTTER.
15. NEW 6x6" DOWNSPOUT.
16. FLEXIBLE DOWN SPOUT ADAPTER BY GUTTER SUPPLY.COM OR APPROVED EQUAL.
17. HVAC DUCTWORK IN SOFFIT.
18. FIBER CANT. STRIP.
19. P.T. 2X BLOCKING
20. P.T. CDX PLYWOOD W/ 24 GA. BRAKE
21. NEW FOIL FACE FLASHING MEMBRANE FASTENED @ 9" O.C. SEE DETAILS 14 & 15 / A 3.2 (SIMILAR)
22. 8X8 COLUMN
23. NEW ALUMINUM 20" x 16" x 8" CONDUCTOR 4" x 4" DOWNSPOUT.
24. 1/2" JOINT W/ CAULK
25. 6" x 6" DOWNSPOUT
26. GRACE ICE AND WATER SHIELD WATER PROOFING EXTEND OVER PLYWOOD SUB FACE BOTH SIDES.
27. NEW CONDUCTOR HEAD 24" x 18" x 12"
28. 1/2" GYPSUM BOARD IN DRYWALL SUSPENDED FURRING SYSTEM, (TYP.)
29. 24 GAUGE BRAKE METAL OVER STEEL W-SHAPE.
30. CORNER BEAD
31. DRYWALL 90 DEGREE ANGLE CLIP
32. STEEL CLOSURE ANGLE

CITY OF TAMPA
CONTRACT ADMINISTRATION DEPARTMENT
PLANNING AND DESIGN DIVISION
306 E. JACKSON STREET 4 NORTH
TAMPA, FLORIDA 33602
p: 813. 274. 8456 – f: 813. 274. 8080
url: www.tampagov.net

James E. Jackson, Jr. AIA, NOMA
City Architect
Edward D. Rice, AIA
Project Architect
Kevin L. Hendica, AIA
Project Architect
Thomas A. Hester, Sr., AIA, NOMA
Project Architect
Kinsey C. Tillman
Drafting Technician
Jerry P. Sanders
Drafting Technician
Byron K. Thomas, LEED GA
Drafting Technician

MEP CONSULTANT
HALL ENGINEERING GROUP
14499 N. DALE MABRY HWY #179
TAMPA, FLORIDA 33618
(813) 374-2121

STRUCTURAL CONSULTANT
BROADWAY ENGINEERING
1335 W. CASS ST.
TAMPA, FLORIDA 33606
(813) 251-9244 FAX (813) 251-9330

CIVIL CONSULTANT
MILLS AND ASSOCIATES, INC.
3242 HENDERSON BOULEVARD
SUITE 300
TAMPA, FLORIDA 33609
(813) 876-5868

LANDSCAPE CONSULTANT

WAYNE C. PAPY CENTER
ADA IMPROVEMENTS
6925 N. FLORIDA AVENUE
TAMPA, FLORIDA 33604

FILE NUMBER
X

PROJECT NUMBER
X

ISSUE DATE
JUNE 30, 2015

DRAWN BY
JERRY P. SANDERS

REVISIONS

PROFESSIONAL SEAL
THOMAS HESTER, AIA, NOMA

AR0091745

SCALE: AS SHOW

DETAILS

SHEET NUMBER
A6.3

X OF X

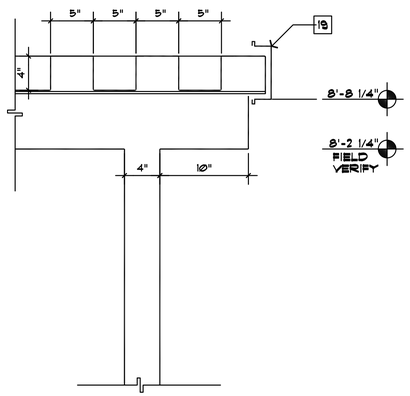

END DETAIL

SCALE: 1-1/2" =1'-0" (CC)

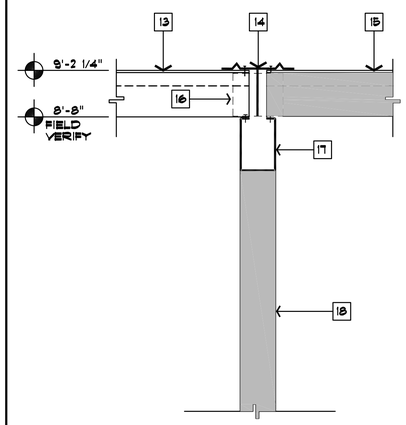

SPLICE B/W EXISTING NEW CANOPY

SCALE: 1-1/2" =1'-0" (DD)

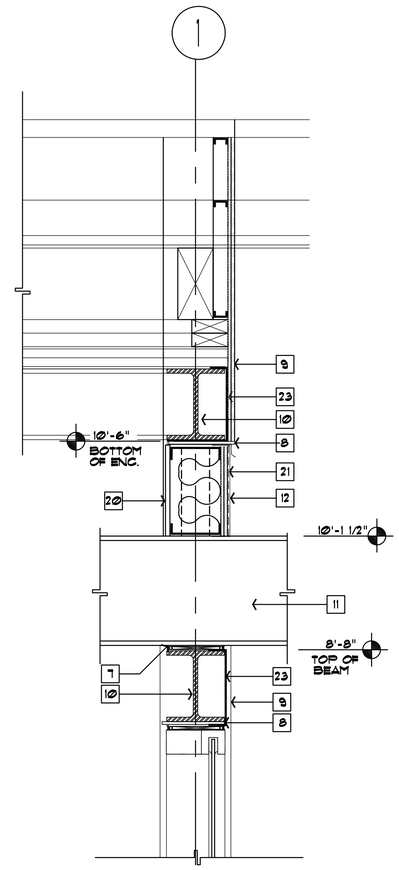

CHILLED WATER ENCLOSURE AT COLUMN LINE 1

SCALE: 1-1/2" =1'-0" (EE)

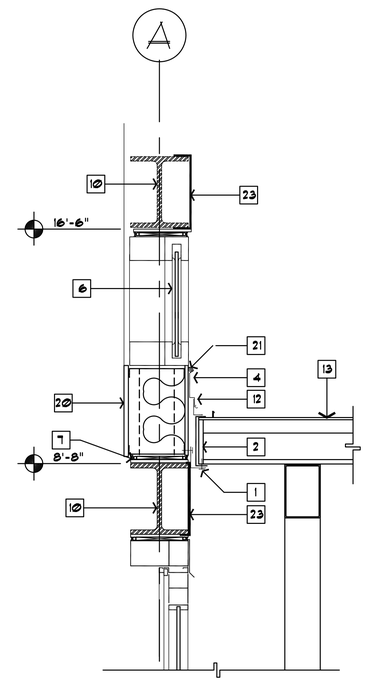

CANOPY AT ENTRY

SCALE: 1-1/2" =1'-0" (FF)

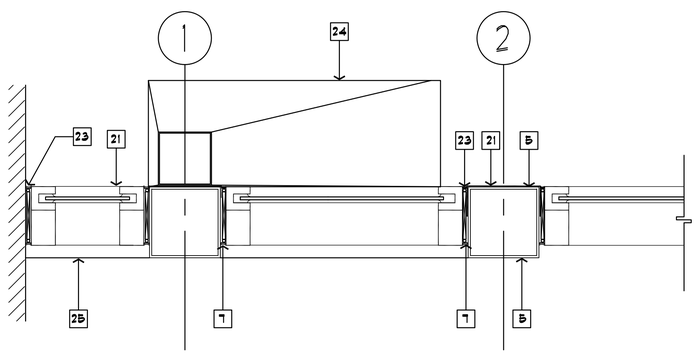

DETAIL AT GYMNASIUM

SCALE: 1-1/2" =1'-0" (GG)

GENERAL NOTES

KEY NOTES

1. 2" x 3" x 1/4" WALL ANGLE W/ 3/8" DIA. STEEL ANCHOR BOLT @ 4'-0"
2. WELDED END DAM
3. ALUMINUM FASCIA W/ FLASHING.
4. COUNTER FLASHING WITH SEALANT
5. 8" x 8" COLUMN PAINTED.
6. GLAZING
7. 1 x SHIM & CAULKING
8. MTL. DRIP EDGE
9. 8x8 COLUMN BEYOND
10. W-SHAPE
11. CHILLED PIPING ENCLOSURE.
12. 24 GAUGE BRAKE METAL SET IN MASTIC OVER 3/4" PLYWOOD ON METAL STUDS.
13. NEW STEEL DECK & FASCIA.
14. NEW ALUM. T FLASHING W/ SEALANT
15. EXISTING DECK & FASCIA
16. ALUMINUM FASCIA SPLICE
17. EXISTING 4x6 CROSS BEAM
18. EXISTING 4x4 SUPPORT
19. EXTRUDED ALUMINUM FASCIA
20. 1/2" GYPSUM BOARD OVER MTL STUDS
21. GRACE ICE AND WATER SHIELD WATER PROOFING EXTEND OVER PLYWOOD SUB FACE BOTH SIDES.
22. 1/2" JOINT W/ CAULK
23. 24 GAUGE BRAKE METAL OVER STEEL W SHAPE
24. 36" x 24" x 12" CONDUCTOR HEAD W/ 6" X 6" DOWNSPOUT.
25. OPAQUE SPANDREL PANEL IN CURTAIN WALL SYSTEM.

CITY OF TAMPA
CONTRACT ADMINISTRATION DEPARTMENT
PLANNING AND DESIGN DIVISION

306 E. JACKSON STREET 4 NORTH
TAMPA, FLORIDA 33602
p: 813. 274. 8456 – f: 813. 274. 8080
url: www.tampagov.net

James E. Jackson, Jr. AIA, NOMA
City Architect

Edward D. Rice, AIA
Project Architect

Kevin L. Hendke, AIA
Project Architect

Thomas A. Hester, Sr., AIA, NOMA
Project Architect

Kinsey C. Tillman
Drafting Technician

Jerry P. Sanders
Drafting Technician

Byron K. Thomas, LEED GA
Drafting Technician

MEP CONSULTANT
HALL ENGINEERING GROUP
14499 N. DALE MABRY HWY #179
TAMPA, FLORIDA 33618
(813) 374-2121

STRUCTURAL CONSULTANT
BROADWAY ENGINEERING
1335 W. CASS ST.
TAMPA, FLORIDA 33606
(813) 251-9244 FAX (813) 251-9330

CIVIL CONSULTANT
MILLS AND ASSOCIATES, INC.
3242 HENDERSON BOULEVARD
SUITE 300
TAMPA, FLORIDA 33609
(813) 876-5868

LANDSCAPE CONSULTANT

WAYNE C. PAPY CENTER
ADA IMPROVEMENTS
6925 N. FLORIDA AVENUE
TAMPA, FLORIDA 33604

FILE NUMBER
X

PROJECT NUMBER
X

ISSUE DATE
JUNE 30, 2015

DRAWN BY
JERRY P. SANDERS

REVISIONS

PROFESSIONAL SEAL
THOMAS HESTER, AIA, NOMA

AR0091745

SCALE: AS SHOW

DETAILS

SHEET NUMBER
A6.4

X OF X

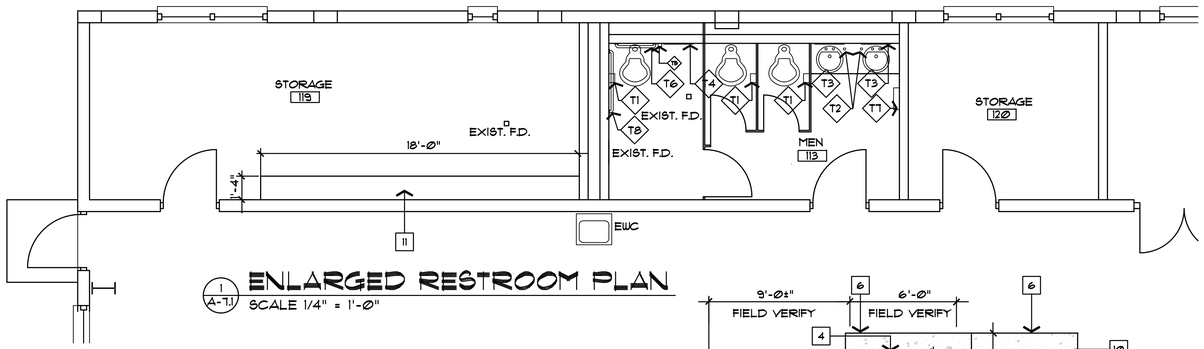

1 A-7.1 ENLARGED RESTROOM PLAN
SCALE 1/4" = 1'-0"

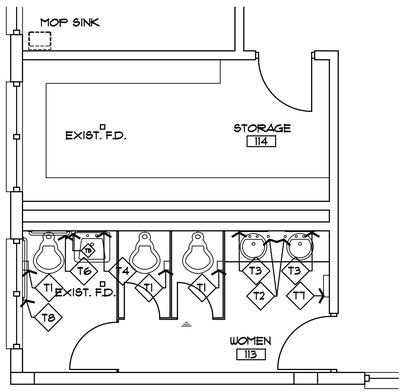

3 A-7.1 ENLARGED RESTROOM PLAN
SCALE 1/4" = 1'-0"

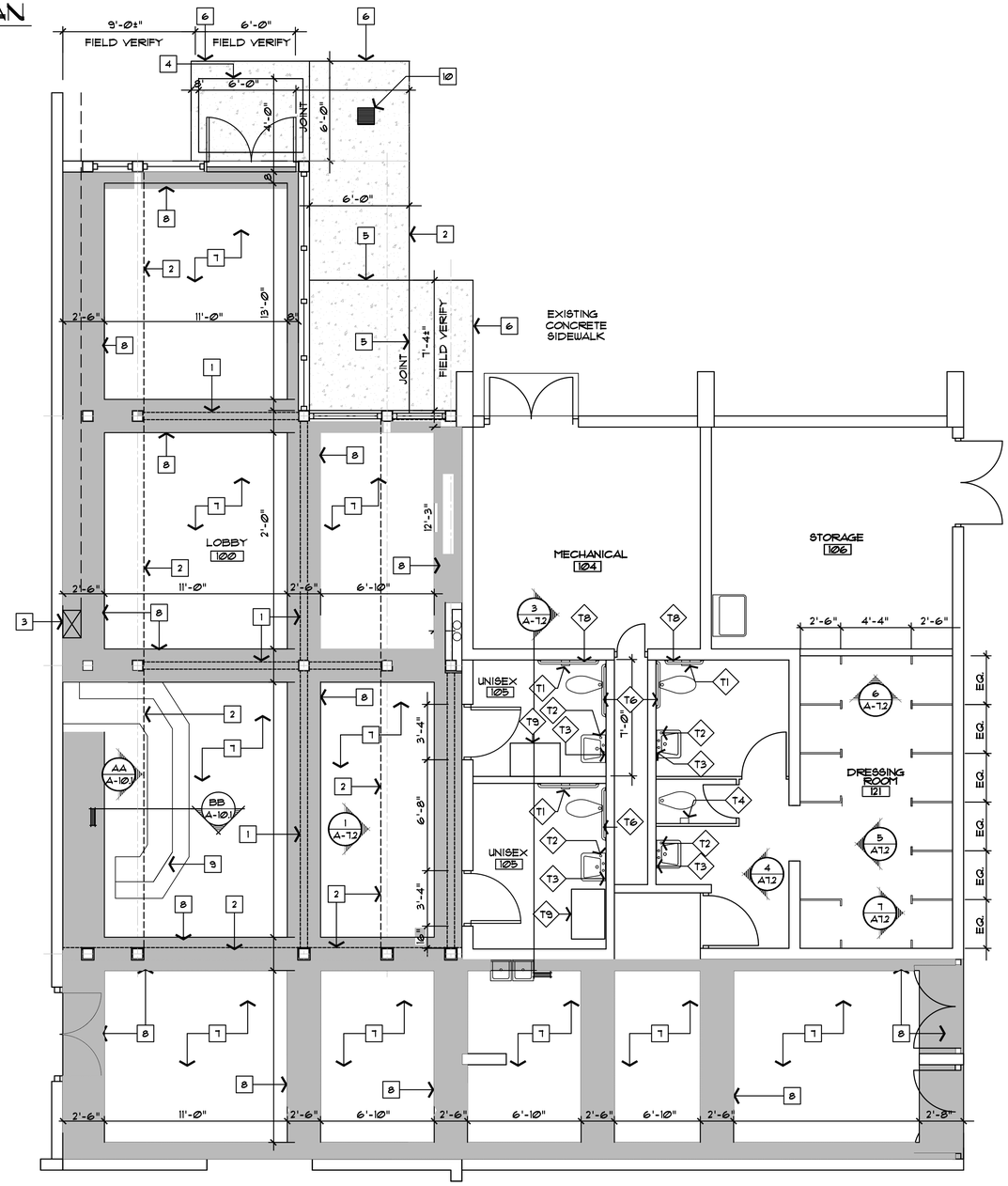

2 A-7.1 ENLARGED FLOOR PLAN
SCALE 1/4" = 1'-0"

TOILET ACCESSORIES

- T1 THREE ROLL SURFACE MOUNTED TOILET TISSUE DISPENSER SIMILAR TO RENOUN REN 05161- WB
- T2 SOAP DISPENSER SIMILAR TO BRADLEY #6324.
- T3 2' x 3' CHANNEL FRAMED MIRROR SIMILAR TO BRADLEY #781.
- T4 2' x 3' FIXED TILT FRAMED MIRROR SIMILAR TO BRADLEY #740.
- T5 SURFACE MOUNTED SOAP DISPENSER SIMILAR TO BRADLEY #6542.
- T6 GRAB BAR SIMILAR TO BRADLEY 800-001 SERIES 36" IN LENGHT.
- T7 PAPER TOWEL DISPENSER / RECEPTACLE SIM. TO BOBRICK MODEL #B-3942
- T8 GRAB BARS - SIMILAR TO BRADLEY 800-001 SERIES WITH 42" BAR AT SIDE OF WATER CLOSET.
- T9 BABY CHANGING TABLE SIMILAR TO KOALA KARE MODEL MODEL # 12100-00

GENERAL NOTES

KEY NOTES

1. EXPOSED STEEL BEAM ABOVE, PAINTED
2. GYPSUM BOARD SOFFIT ABOVE, PAINTED
3. EXISITNG CHILLED WATER PIPE ENCLOSURE.
4. 6'- 0" x 4'-0" WALK - OFF MAT.
5. CONTROL JOINT.
6. EXPANSION JOINT.
7. VCT (FIELD COLOR)
8. VCT (ACCENT COLOR)
9. RECEPTION DESK.
10. 12' x 12' ADA COMPLIANT GRATE. SEE SITE PLAN SHEET C-10.
11. 3 SHELVES

CITY OF TAMPA
CONTRACT ADMINISTRATION DEPARTMENT
PLANNING AND DESIGN DIVISION
306 E. JACKSON STREET 4 NORTH
TAMPA, FLORIDA 33602
p: 813. 274. 8456 – f: 813. 274. 8080
url: www.tampagov.net

James E. Jackson, Jr. AIA, NOMA
City Architect
Edward D. Rice, AIA
Project Architect
Kevin L. Henika, AIA
Project Architect
Thomas A. Hester, Sr., AIA, NOMA
Project Architect
Kinsey C. Tillman
Drafting Technician
Jerry P. Sanders
Drafting Technician
Byron K. Thomas, LEED GA
Drafting Technician

MEP CONSULTANT
HALL ENGINEERING GROUP
14499 N. DALE MABRY HWY #179
TAMPA, FLORIDA 33618
(813) 374-2121

STRUCTURAL CONSULTANT
BROADWAY ENGINEERING
1335 W. CASS ST.
TAMPA, FLORIDA 33606
(813) 251-9244 FAX (813) 251-9330

CIVIL CONSULTANT
MILLS AND ASSOCIATES, INC.
3242 HENDERSON BOULEVARD
SUITE 300
TAMPA, FLORIDA 33609
(813) 876-5869

LANDSCAPE CONSULTANT

WAYNE C. PAPY CENTER
ADDITION AND RENOVATION
6925 N. FLORIDA AVENUE
TAMPA, FLORIDA 33604

FILE NUMBER
X

PROJECT NUMBER
X

ISSUE DATE
JUNE 30, 2015

DRAWN BY
JERRY P. SANDERS

REVISIONS

PROFESSIONAL SEAL
X

X

SCALE: 1"=1'-0"

ENLARGED FLOOR PLANS

SHEET NUMBER
A 7.1

X OF X

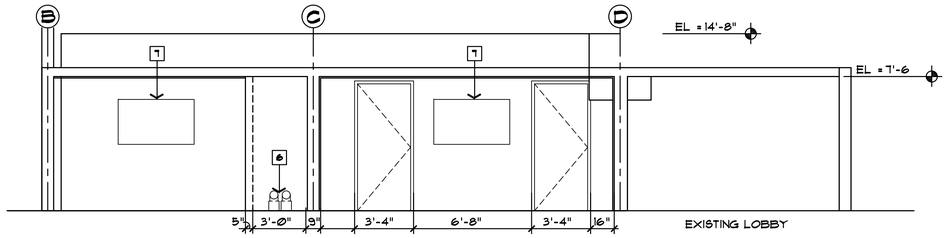

SOUTH INTERIOR ELEVATION (1 / A-7.2)
SCALE 1/4" = 1'-0"

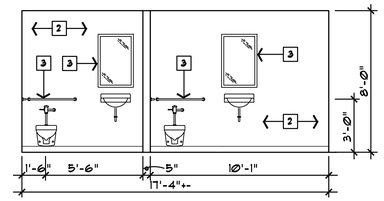

ELEVATION (3 / A-7.2)
SCALE 1/4" = 1'-0"

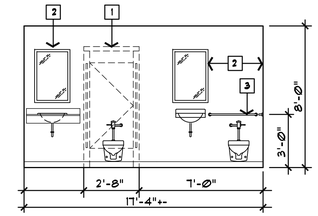

ELEVATION (4 / A-7.2)
SCALE 1/4" = 1'-0"

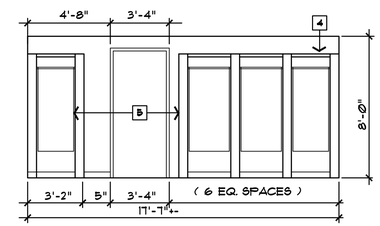

ELEVATION (5 / A-7.2)
SCALE 1/4" = 1'-0"

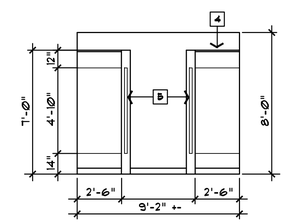

ELEVATION (6 / A-7.2)
SCALE 1/4" = 1'-0"

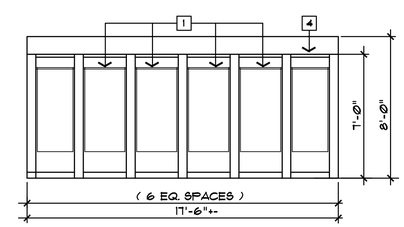

ELEVATION (7 / A-7.2)
SCALE 1/4" = 1'-0"

GENERAL NOTES

KEY NOTES

1. TOILET PARTITION, DASH FOR CLARITY
2. EXISTING CONCRETE BLOCK WALL, PAINTED
3. TOILET ACCESSORIES. SEE SHEET A7.1
4. DRESSING ROOM PARTITIONS.
5. PHENOLIC CURTAINS & RODS. EXISTING
6. CHILLED WATER PIPES. DASHED FOR CLARITY.
7. PROPOSED MONITOR

CITY OF TAMPA
CONTRACT ADMINISTRATION DEPARTMENT
PLANNING AND DESIGN DIVISION
306 E. JACKSON STREET 4 NORTH
TAMPA, FLORIDA 33602
p: 813. 274. 8456 – f: 813. 274. 8080
url: www.tampagov.net

James E. Jackson, Jr. AIA, NOMA
City Architect

Edward D. Rice, AIA
Project Architect

Kevin L. Henika, AIA
Project Architect

Thomas A. Hester, Sr., AIA, NOMA
Project Architect

Kinsey C. Tillman
Drafting Technician

Jerry P. Sanders
Drafting Technician

Byron K. Thomas, LEED GA
Drafting Technician

MEP CONSULTANT
HALL ENGINEERING GROUP
14499 N. DALE MABRY HWY #179
TAMPA, FLORIDA 33618
(813) 374-2121

STRUCTURAL CONSULTANT
BROADWAY ENGINEERING
1335 W. CASS ST.
TAMPA, FLORIDA 33606
(813) 251-9244 FAX (813) 251-9330

CIVIL CONSULTANT
MILLS AND ASSOCIATES, INC.
3242 HENDERSON BOULEVARD
SUITE 300
TAMPA, FLORIDA 33609
(813) 876-5869

LANDSCAPE CONSULTANT

WAYNE C. PAPY CENTER
ADDITION AND RENOVATION
6925 N. FLORIDA AVENUE
TAMPA, FLORIDA 33604

FILE NUMBER
X

PROJECT NUMBER
X

ISSUE DATE
JUNE 30, 2015

DRAWN BY
JERRY P. SANDERS

REVISIONS

PROFESSIONAL SEAL
X

X

SCALE: 1/4"=1'-0"

INTERIOR ELEVATION

SHEET NUMBER
A 7.2

X OF X

DOOR SCHEDULE

NO.	EL.	DOOR W	DOOR H	DOOR T	DOOR MATERIAL	FRAME TYP.	FRAME MAT'L	DETAILS HEAD	DETAILS JAMB	DETAILS SILL	FIRE RATED	REMARKS
100			7'-0"	1-3/4"	ALUM.			-	-	3	-	SEE STOREFRONT ELEVATION CLOSER, PANIC BAR
101	B	2-3'-0"	7'-0"	1-3/4"	CURTAIN WALL	-	ALUM.	4	4	2	-	SEE ALUM. CURTAIN ELEVATION CLOSER PANIC BAR
102	B	2-3'-0"	7'-0"	1-3/4"	S.C. WOOD	-	ALUM.					SEE ALUM. CURTAIN ELEVATION CLOSER PANIC BAR
103	A	3'-0"	7'-0"	1-3/4"	S.C. WOOD	1	H.M.					
104	A	3'-0"	7'-0"	1-3/4"	S.C. WOOD	1	H.M.					
105	A	3'-0"	7'-0"	1-3/4"	S.C. WOOD	1	H.M.					
106	A	3'-0"	7'-0"	1-3/4"	S.C. WOOD	1	H.M.					
107					S.C. WOOD	1	H.M.					
108	C	2-3'-0"	7'-0"	1-3/4"	S.C. WOOD	EXIST.	-					NEW DOOR IN EXISTING H.M. FRAMES
109	C	2-3'-0"	7'-0"	1-3/4"	S.C. WOOD	EXIST.	-					NEW DOOR IN EXISTING H.M. FRAMES
110	C	2-3'-0"	7'-0"	1-3/4"	S.C. WOOD	EXIST.	-					NEW DOOR IN EXISTING H.M. FRAMES

FINISH SCHEDULE

NO.	ROOM NAME	FLOOR	BASE	WALLS N	WALLS E	WALLS S	WALLS W	CLG.	CLG. HT.	REMARKS
103	WOMEN	F1	B1	W3	W3	W3	W3	C2	EXIST.	
105	UNISEX	F1	B1	W3	W3	W3	W3	C2	8'-0"	
113	WOMEN	F1	B1	W3	W3	W3	W3	C2	EXIST.	REPAINT EXISTING CEILING
114	STORAGE	F1	B1	W3	W3	W3	W3	C2	EXIST.	REPAINT EXISTING CEILING
118	MECHANICAL	EXIST.	W3	W3	W3	W3	W3	EXIST.	EXIST.	REPAINT EXISTING WALLS
119	STORAGE	EXIST.	B1	W3	W3	W3	W3	EXIST.	EXIST.	
120	WOMEN	F1	B1	W3	W3	W3	W3	C1	8'-0"	
121	DRESSING ROOM	F1	B1	W3	W3	W3	W3	C2	EXIST.	
122	STORAGE	F1	B1	W3	-	W3	W3	C1/C3	7'-10"@ C1	CEILING HEIGHTS VARY @ C3
123	LOBBY	F1	B1	W3	W3	W3	W3	C2	8'-0"	
124	UNISEX	EXIST.	EXIST.	W3	W3	W3	W3	EXIST.	EXIST.	

FINISH LEGEND

W1	PAINT GYP. BD	F1	VINLY COMPOSTION TILE (VCT)	C1	SUSPENDED ACOUSTICAL CEILING	B1	VINLY BASE
W2	CERAMIC TILE	F2	CERAMIC TILE	C2	SUSPENDED ACOUSTICAL CEILING	B2	CERAMIC TILE BASE
W3	EPOXY PAINT	F3	TILE	C3	EXPOSED STRUCTURE, PAINT	B3	QUARRY TILE

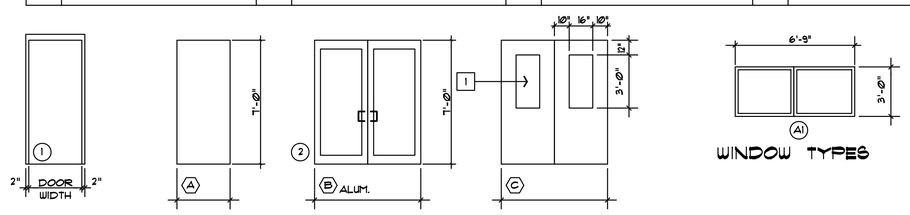

DOOR TYPES

WINDOW TYPES

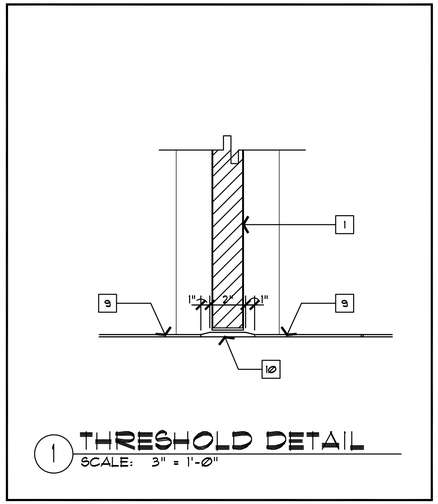

1 THRESHOLD DETAIL
SCALE: 3" = 1'-0"

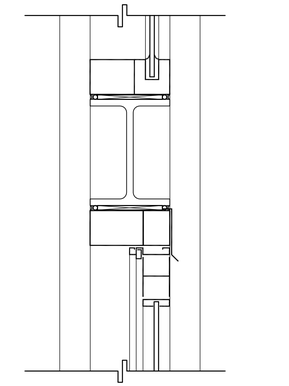

2 DETAIL
SCALE: 3" = 1'-0"

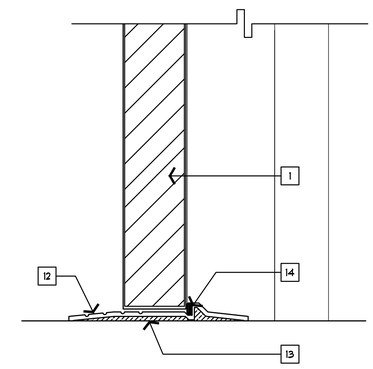

3 THRESHOLD DETAIL
SCALE: 6" = 1'-0"

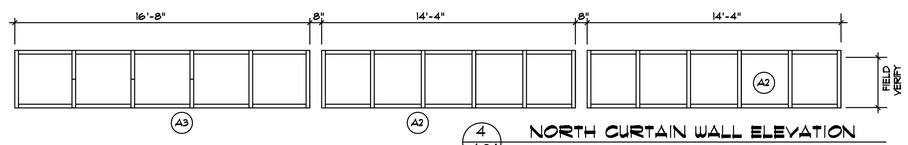

4 A8.1 NORTH CURTAIN WALL ELEVATION

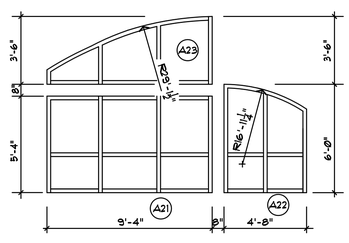

3 A8.1 WEST CURTAIN WALL ELEVATION

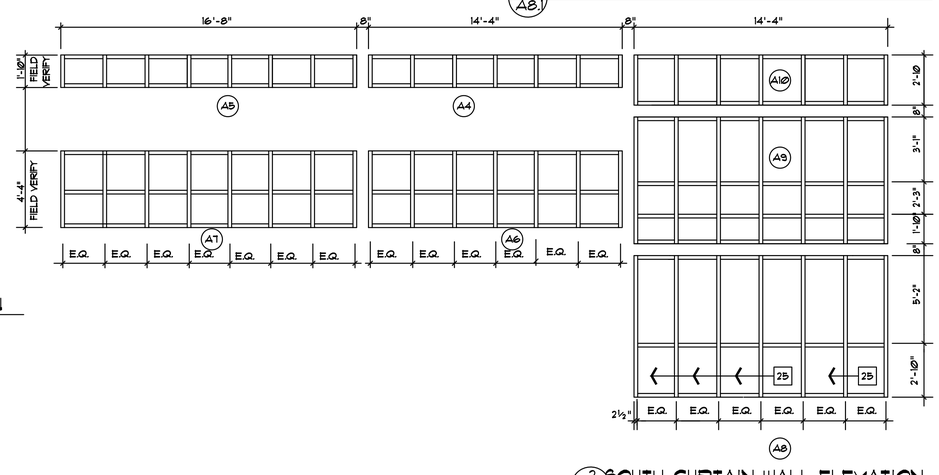

2 A8.1 SOUTH CURTAIN WALL ELEVATION

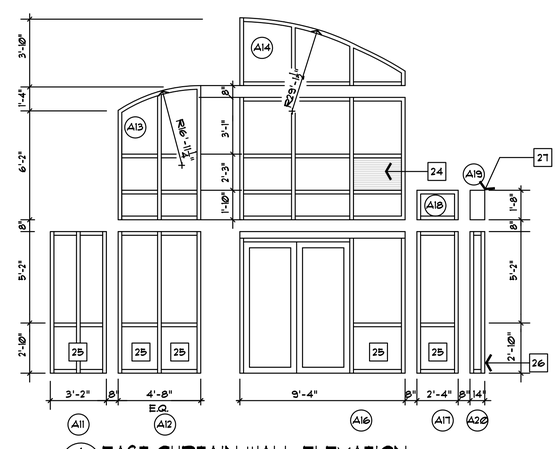

1 A8.1 EAST CURTAIN WALL ELEVATION

GENERAL NOTES

KEY NOTES

1. DOOR SEE SCHEDULE.
2. 2- 2x4 HEADER W/PLYWOOD INFILL.
3. CASING.
4. CORNER BEAD.
5. SEALANT.
6. HOLLOW METAL FRAME PROVIDE G90 GALV. AT ALL EXTERIOR FRAMES. FILLED WITH GROUT AND PAINTED
7. PROVIDE 1x2 PT AT ALL CORNERS TYPICAL.
8. NOT USED
9. FLOOR - SEE SCHEDULE.
10. MARBLE THRESHOLD.
11. CERAMIC TILE.
12. ALUMINUM SADDLE.
13. CONTINUOUS BED OF SEALANT.
14. VINYL INSERT.
15. SEE FLOOR PLAN FOR OTHER WALL TYPES FOR VARIOUS LOCATIONS.
16. NOT USED
17. PRE-ENGINEERED STEEL LINTEL. PAINT ALL EXPOSED SURFACES.
18. 1/4" WIRE GLASS
19. PROVIDE STOPS CONTINUOUS, MECHANICALLY FASTEN TO FRAME
20. ASTRAGAL
21. 2 X 4 SUB-FRAME HEAD AND JAMB
22. SEE HEAD DETAIL #4 FOR INFORMATION
23. HOLLOW METAL FRAME ANCHOR
24. 32" x 22" OA LOUVER .
25. TEMPERED GLASS IN HAZARDOUS LOCATION.
26. OPAQUE TRANSOM PANEL IN CURTIAN WALL SYSTEM.
27. EXISTING CHILLED WATER PIP ENCLOSURE.

CITY OF TAMPA
CONTRACT ADMINISTRATION DEPARTMENT
PLANNING AND DESIGN DIVISION
306 E. JACKSON STREET 4 NORTH
TAMPA, FLORIDA 33602
p: 813. 274. 8456 – f: 813. 274. 8080
url: www.tampagov.net

James E. Jackson, Jr. AIA, NOMA
City Architect
Edward D. Rice, AIA
Project Architect
Kevin L. Hendica, AIA
Project Architect
Thomas A. Hester, Sr., AIA, NOMA
Project Architect
Kinsey C. Tillman
Drafting Technician
Jerry P. Sanders
Drafting Technician
Byron K. Thomas, LEED GA
Drafting Technician

MEP CONSULTANT
HALL ENGINEERING GROUP
14499 N. DALE MABRY HWY #179
TAMPA, FLORIDA 33618
(813) 374-2121

STRUCTURAL CONSULTANT
BROADWAY ENGINEERING
1335 W. CASS ST.
TAMPA, FLORIDA 33606
(813) 251-9244 FAX. (813) 251-9330

CIVIL CONSULTANT
MILLS AND ASSOCIATES, INC.
3242 HENDERSON BOULEVARD
SUITE 300
TAMPA, FLORIDA 33609
(813) 876-5869

LANDSCAPE CONSULTANT

WAYNE C. PAPY CENTER
ADDITION AND RENOVATION
6925 N. FLORIDA AVENUE
TAMPA, FLORIDA 33604

FILE NUMBER
X

PROJECT NUMBER
X

ISSUE DATE
JUNE 30, 2015

DRAWN BY
JERRY P. SANDERS

REVISIONS

PROFESSIONAL SEAL
X

X

SCALE: 1"=1'-0"

SCHEDULES / DOOR & FRAME

SHEET NUMBER
A 8.1

X OF X

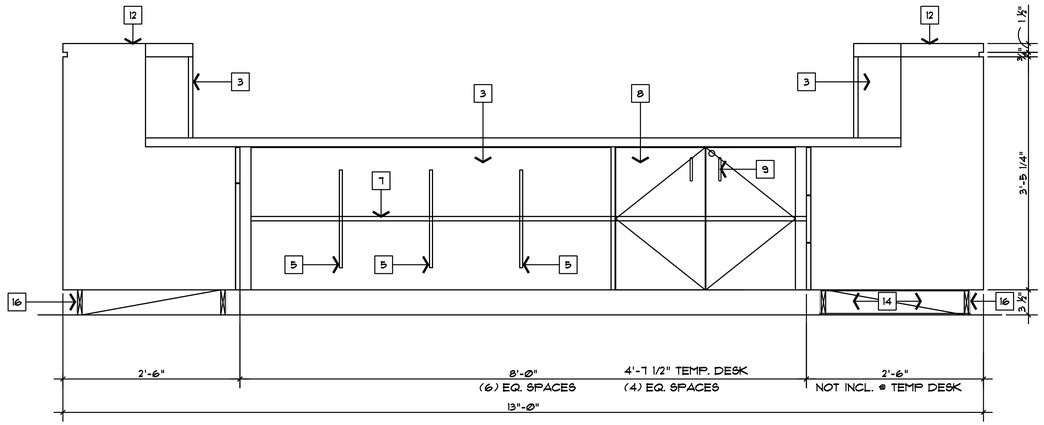

AA RECEPTION

SCALE: 1"= 1'-0"

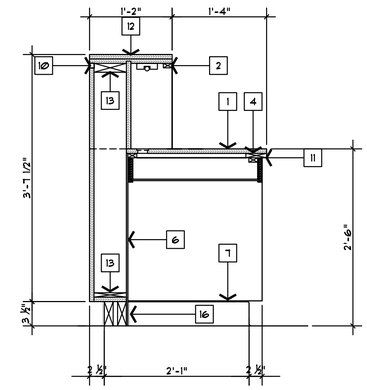

BB SECTION (RECEPTION DESK)

SCALE 1"=1'-0"

GENERAL NOTES

1. ALL DRAWERS SHALL BE LOCKABLE
2. TEMPORAY DESK WILL NOT HAVE LOCKABLE DRAWERS.
3. TEMPORAY DESK WILL WILL BE CONSTRUCTED WITH HEAVY DUTY CASTER TO ALLOW IT TO BE MOVED.

KEY NOTES

1. 3/4" PLYWOOD. COVER TOP AND FRONT WITH LAMINATE. COVER BOTTOM WITH CABINET LINER.
2. 1"X2" WOOD FRAME/GROUND. COVER EXPOSED SURFACES WITH LAMINATE
3. OPEN BINS
4. 1"X2" WOOD FRAME/GROUND.
5. METAL SHELF STANDARDS.
6. 1/2" FURNITURE GRADE PLYWOOD. COVER EXPOSED SURFACE WITH CABINET LINER.
7. 3/4" FURNITURE GRADE PLYWOOD. COVER WITH PLASTIC LAMINATE.
8. LOCKABLE CABINET
9. BRUSHED SSTL WIRE PULL. TYPICAL AT ALL DOORS.
10. METAL REVEAL. COLOR TO MATCH CABINET
11. 1"X4" WOOD GROUND.
12. 1 1/2" COUNTERTOP AND EDGE,TYP.
13. 3/4" WOOD BLOCKING.
14. 2"X4" SUPPORT GROUND. NOTCH AS INDICATED.
15. NOT USED
16. INSTALL 4" VINYL BASE.

CITY OF TAMPA
CONTRACT ADMINISTRATION DEPARTMENT
PLANNING AND DESIGN DIVISION

306 E. JACKSON STREET 4 NORTH
TAMPA, FLORIDA 33602
p: 813. 274. 8456 – f: 813. 274. 8080
url: www.tampagov.net

James E. Jackson, Jr. AIA, NOMA
City Architect

Edward D. Rice, AIA
Project Architect

Kevin L. Henfke, AIA
Project Architect

Thomas A. Hester, Sr., AIA, NOMA
Project Architect

Kinsey C. Tillman
Drafting Technician

Jerry P. Sanders
Drafting Technician

Byron K. Thomas, LEED GA
Drafting Technician

MEP CONSULTANT
HALL ENGINEERING GROUP
14499 N. DALE MABRY HWY #179
TAMPA, FLORIDA 33618
(813) 374-2121

STRUCTURAL CONSULTANT
BROADWAY ENGINEERING
1335 W. CASS ST.
TAMPA, FLORIDA 33606
(813) 251-9244 FAX (813) 251-9330

CIVIL CONSULTANT
MILLS AND ASSOCIATES, INC.
3242 HENDERSON BOULEVARD
SUITE 300
TAMPA, FLORIDA 33609
(813) 876-5868

LANDSCAPE CONSULTANT

WAYNE C. PAPY CENTER
ADA IMPROVEMENTS
6925 N. FLORIDA AVENUE
TAMPA, FLORIDA 33604

FILE NUMBER
X

PROJECT NUMBER
X

ISSUE DATE
JUNE 30, 2015

DRAWN BY
JERRY P. SANDERS

REVISIONS

PROFESSIONAL SEAL
THOMAS HESTER, AIA, NOMA

16

SCALE: AS SHOW

MILLWORK DETAILS

SHEET NUMBER
A10.1

X OF X

AIR HANDLING UNIT SCHEDULE

MARK	AIRFLOW DATA: TOTAL SUPPLY AIR	AIRFLOW DATA: OUTSIDE AIR	FAN DATA: EXTERNAL STATIC PRESSURE	FAN DATA: MOTOR POWER	FAN DATA: VARIABLE FREQUENCY DRIVE	FAN DATA: MCA	FAN DATA: MOCP	FAN DATA: ELECTRICAL	COOLING DATA: TOTAL CAPACITY	COOLING DATA: SENSIBLE CAPACITY	COOLING DATA: ENTERING AIR TEMP.	COOLING DATA: LEAVING AIR TEMP.	COOLING DATA: CHILLED WATER FLOW	COOLING DATA: WATER PRESSURE DROP	COOLING DATA: ENTERING WATER TEMP.	COOLING DATA: LEAVING WATER TEMP.
	CFM	CFM	IN. WG.	HP		AMPS	AMPS	V/PH/Hz	MBtuH	MBtuH	°Fdb/°Fwb	°Fdb/°Fwb	GPM	FT. WG.	°F	°F
AHU-5	3400	425	1.5	5	PROVIDE	16.2	25	230/3/60	127	92.8	77.9/65.4	53.0/52.8	26	6.0	45	55

MARK	ELECTRIC HEAT DATA: HEATING CAPACITY	ELECTRIC HEAT DATA: HEATING AIR FLOW	ELECTRIC HEAT DATA: COIL POSITION	ELECTRIC HEAT DATA: ENTERING & LEAVING AIR TEMP.	ELECTRIC HEAT DATA: MCA	ELECTRIC HEAT DATA: MOCP	ELECTRIC HEAT DATA: ELECTRICAL	UNIT DATA: UNIT ORIENTATION	UNIT DATA: FILTER	UNIT DATA: UNIT WEIGHT	UNIT DATA: MANUFACTURER & MODEL	NOTES
	KW	CFM		°F – °F	AMPS	AMPS	V/PH/Hz			LBS.		
AHU-5	20.0	2,600	REHEAT	66.8 – 90	48	60	240/3/60	HORIZONTAL	2" PLEATED MERV 8	2100	CARRIER 39M	1,2,3,4, 5,6,7,8,9

NOTES:
1. PROVIDE UNIT WITH INTEGRAL DISCONNECT SWITCH.
2. PROVIDE UNIT WITH DOUBLE WALL CONSTRUCTION.
3. PROVIDE SHEET METAL RETURN AIR PLENUM WITH UNIT – SEE DRAWINGS FOR SIZE.
4. PROVIDE UNIT WITH DIRECT EXPANSION COOLING COIL HAVING SCHEDULED COOLING CAPACITY, AND WITH REFRIGERANT PIPING TAPS FOR FUTURE HEAT PUMP IF NECESSARY.
5. PROVIDE STAINLESS STEEL DRAIN PAN INSIDE UNIT.
6. PROVIDE OVERFLOW AUXILIARY PAN UNDER UNIT WITH FLOAT SWITCH AND ALARM.
7. PROVIDE INVERTER-DUTY MOTOR WITH SUPPLY FAN CAPABLE FOR USE WITH VARIABLE FREQUENCY DRIVE.
8. PROVIDE VFD TO CONTROL SUPPLY FAN.
9. PROVIDE MINIMUM 6-ROW COOLING COIL

DUCT & DUCT INSULATION SCHEDULE

DUCT SYSTEM	DUCT TYPE	DUCT MATERIAL	PRESSURE CLASS	MINIMUM SMACNA SEAL CLASS	VAPOR BARRIER	SMACNA LEAKAGE CLASS	INSULATION TYPE	INSULATION THICKNESS	INSULATION DENSITY	INSULATION JACKET
SUPPLY AIR	CONCEALED, SINGLE WALL, ROUND OR RECTANGULAR	G-60 GALVANIZED STEEL	POSITIVE 2 IN. W.G.	CLASS 'A'	YES	6	MINERAL-FIBER BLANKET	2 IN.	1.5 LB/CU. FT.	FACTORY APPLIED FSK ALUMINUM FOIL WITH FIBERGLASS REINFORCED SCRIM
SUPPLY AIR	EXPOSED, SINGLE WALL, ROUND	G-60 GALVANIZED STEEL; PAINT WITH COLOR AS DIRECTED BY ARCHITECT	POSITIVE 2 IN. W.G.	CLASS 'A'	YES	6	N/A	N/A	N/A	N/A
RETURN AIR	CONCEALED OR EXPOSED SINGLE WALL, RECTANGULAR	GALVANIZED STEEL; PAINT WITH COLOR AS DIRECTED BY ARCHITECT	POSITIVE OR NEGATIVE 2 IN. W.G.	CLASS 'A'	YES	6	N/A	N/A	N/A	N/A
EXHAUST AIR (CONNECTED TO EXHAUST FAN)	CONCEALED OR EXPOSED, SINGLE WALL, RECTANGULAR	ALUMINUM ALLOY, 3003-H14, ASTM B 209	NEGATIVE 2 IN. W.G.	CLASS 'A'	YES	12	N/A	N/A	N/A	N/A
OUTSIDE AIR	CONCEALED, SINGLE WALL, ROUND OR RECTANGULAR	G-60 GALVANIZED STEEL	POSITIVE OR NEGATIVE 2 IN. W.G.	CLASS 'A'	YES	6	MINERAL-FIBER BOARD	2 IN.	3.0 LB/CU. FT.	N/A

FAN SCHEDULE

MARK	TYPE	SERVICE	AIR VOLUME	STATIC PRESSURE	FAN DRIVE	FAN SPEED	MOTOR POWER	MOTOR SPEED	ELECTRICAL	SOUND LEVEL	MANUFACTURER & MODEL	DETAIL REFERENCE	NOTES
			CFM	IN. WC.		RPM	HP	RPM	V/PH/Hz	SONES			
EF-1	ROOF UPBLAST	LOBBY RESTROOM EXHAUST	375	0.4	DIRECT	1,475	1/8	1,550	115/1/60	8.3	COOK 100R15DM	D/M5.1	1,2,3,4,7
EF-2	INLINE	N.E. RESTROOM 120	240	0.4	DIRECT	1,355	1/6	1,200	115/1/60	5.6	COOK 90SQN12D	E/M5.1	1,2,4,6,7
EF-3	ROOF UPBLAST	N.W. RESTROOM 113	240	0.4	DIRECT	1,470	1/8	1,550	115/1/60	5.6	COOK 90R15DL	D/M5.1	1,2,3,6,7

NOTES:
1. PROVIDE MOTORIZED BACKDRAFT DAMPER, WIRED TO CLOSE WHEN FAN STOPS.
2. PROVIDE BIRDSCREEN AT PENETRATION TO EXTERIOR.
3. PROVIDE 12" HIGH ALUMINUM ROOF CURB.
4. PROVIDE WITH DISCONNECT SWITCH, NON-FUSIBLE TYPE, WITH THERMAL-OVERLOAD PROTECTION, MOUNTED INSIDE FAN HOUSING.
5. PROVIDE INSULATED FAN HOUSING.
6. PROVIDE SPRING CEILING VIBRATION ISOLATOR KIT.
7. PROVIDE FLEXIBLE CONNECTORS AT EVERY DUCT CONNECTION TO EQUIPMENT.

DESIGN TEMPERATURES

OUTSIDE TEMPERATURES: COOLING DESIGN	OUTSIDE TEMPERATURES: DEHUMIDIFICATION DESIGN	OUTSIDE TEMPERATURES: HEATING DESIGN	INSIDE TEMPERATURES: COOLING DESIGN	INSIDE TEMPERATURES: HEATING DESIGN
°Fdb-°Fwb	°Fdb-°Fwb	°Fdb	°Fdb-%RH	°Fdb
92-77	88-80	38	75-50	70

GRILLE – REGISTER – DIFFUSER – SCHEDULE

MARK	PANEL SIZE	NECK SIZE	TYPE	MAX. AIRFLOW	MIN. AIRFLOW	MANUFACTURER & MODEL	NOTES
	IN.	IN.		CFM	CFM		
SR-1	20x12	18x10	SIDEWALL	500	340	PRICE 620DAL	1,2
S-1	12x12	6ø	CEILING	180	50	PRICE ASPD	1
S-2	24x24	8ø	CEILING	280	140	PRICE ASPD	1
R-1	24x24	20x20	CEILING	1400	800	PRICE 630DAL	1,2
ER-1	12x12	6x6	CEILING	90	40	PRICE 630DAL	1,2
ER-2	12x12	8x8	CEILING	180	100	PRICE 630DAL	1,2
ER-3	24x24	10x10	CEILING	290	190	PRICE 630DAL	1,2

NOTES:
1. INSTALL RUNOUT DUCT WITH THE SAME SIZE AS SCHEDULED NECK SIZE, UNLESS OTHERWISE NOTED.
2. PROVIDE WITH INTEGRAL ALUMINUM OPPOSED BLADE DAMPER.

CONTROL POINT LIST – EXHAUST FAN (EF-1,2,3)

INPUTS: POINT	INPUTS: DESCRIPTIONS	INPUTS: ALARM	OUTPUTS: POINT	OUTPUTS: DESCRIPTIONS
DI-1	EXHAUST FAN STATUS	EXHAUST FAN MALFUNCTION	DO-1	EXHAUST FAN ENERGIZE/DE-ENERGIZE

CONTROL POINT LIST – VARIABLE VOLUME AHU (AHU-5)

INPUTS: POINT	INPUTS: DESCRIPTIONS	INPUTS: ALARM	OUTPUTS: POINT	OUTPUTS: DESCRIPTIONS
DI	SUPPLY FAN STATUS	SUPPLY FAN MALFUNCTION	DO	SUPPLY FAN ENERGIZE/DE-ENERGIZE
AI	VFD FEEDBACK		AO	VFD SUPPLY FAN SPEED CONTROL
AI	OA FLOW (CFM)		AO	OA DAMPER – MODULATING
AI	RA TEMPERATURE		AO	RA DAMPER – MODULATING
DI	RA SMOKE DETECTED	SMOKE DETECTED	AO	CHW VALVE CONTROL – MODULATING
AI	FILTER DP	DIRTY FILTER	DO	ELECTRIC HEATING ON/OFF (STAGE 1)
AI	CHWS TEMPERATURE		DO	ELECTRIC HEATING ON/OFF (STAGE 2)
AI	CHWR TEMPERATURE			
AI	CHW DIFFERENTIAL PRESSURE			
AI	CHW VALVE POSITION			
AI	COOLING COIL LEAVING AIR TEMPERATURE			
AI	SPACE TEMPERATURE			
DI	SA SMOKE DETECTED	SMOKE DETECTED		
AI	SPACE RELATIVE HUMIDITY			

EXHAUST FAN CONTROL SCHEMATIC
TYPICAL FOR: EF-1, EF-2, EF-3

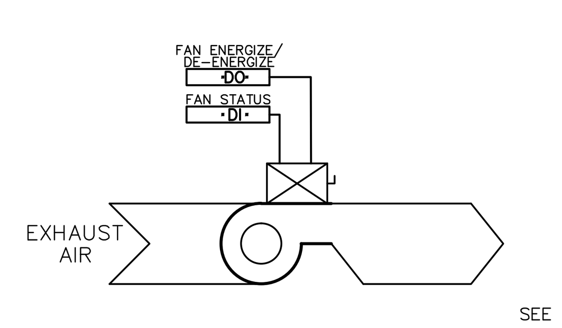

CONTROL SCHEMATIC – EXHAUST FAN
(B) SCALE: NTS

VAV AHU CONTROL SCHEMATIC
TYPICAL OF AHU-5

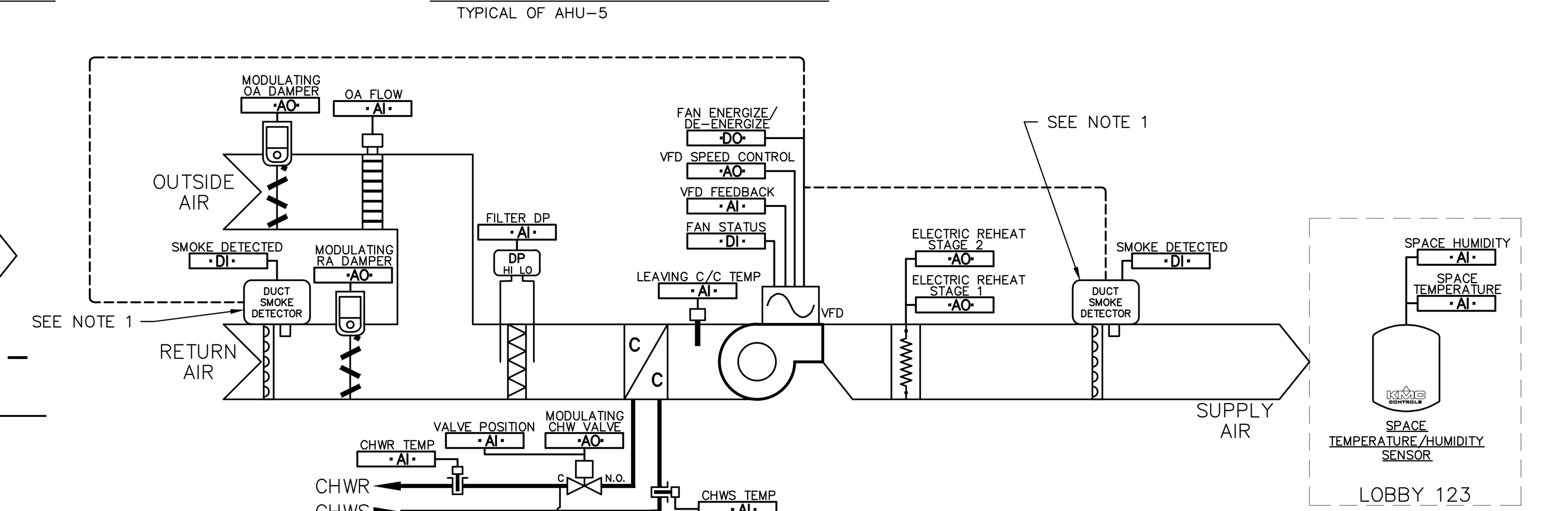

NOTE 1: SMOKE DETECTORS SHALL BE DIRECTLY HARD WIRED TO DE-ENERGIZE SUPPLY FAN UPON DETECTION OF PRODUCTS OF COMBUSTION.

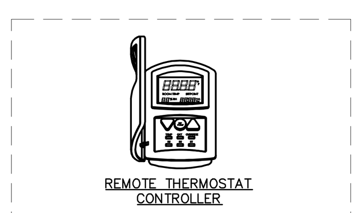

EXISTING
OFFICE 110A

NOTE:
CONTROLLING THERMOSTAT SHALL BE LOCKED IN REMOTE OFFICE PER HVAC DRAWINGS. LCD DISPLAY SHALL INDICATE LOBBY 123 SPACE TEMPERATURE/HUMIDITY SENSOR READINGS IN LIEU OF ON BOARD READINGS.

CONTROL SCHEMATIC – VAV AHU-5
(A) SCALE: NTS

SEQUENCE OF OPERATIONS – AHU-5

AHU-5 – SINGLE-ZONE VAV AIR HANDLING UNIT:

UNOCCUPIED MODE: THE AHU SHALL BE DE-ENERGIZED, 2-WAY CONTROL VALVE SHALL MODULATE CLOSED, AND THE OUTSIDE AIR DAMPER SHALL CLOSE. THE SPACE TEMPERATURE AND HUMIDITY WILL BE MONITORED TO MAINTAIN A SETBACK TEMPERATURE OF 85°F (ADJUSTABLE) AND HUMIDITY LEVEL OF 70% (ADJUSTABLE). IF SPACE TEMPERATURE EXCEEDS SETPOINT THE AIR HANDLER SHALL BE STARTED AND ENTER THE LOW OCCUPANCY MODE CONTROL SEQUENCE. IF THE HUMIDITY SETPOINT IS EXCEEDED, THE AIR HANDLER SHALL BE STARTED AND ENTER THE HUMIDITY CONTROL MODE SEQUENCE. IF SYSTEM IS INITIATED DURING UNOCCUPIED MODE, THEN ALL ASSOCIATED EQUIPMENT (CHILLERS, PUMPS, ETC.) THAT IS REQUIRED FOR OPERATION SHALL BE PLACED INTO A MODE OF OPERATION AS PROGRAMMED IN THEIR RESPECTIVE SEQUENCES OF OPERATION.

OCCUPIED COOLING MODE: THE AHU SHALL BE STARTED AND STOPPED VIA AN ADJUSTABLE OCCUPANCY SCHEDULE ENTERED INTO THE DIGITAL CONTROLLER. OCCUPANCY SCHEDULES SHALL BE ADJUSTABLE THROUGH THE OPERATOR'S WORKSTATION OR VIA INTERNET CONNECTION FROM A REMOTE WORKSTATION. UPON RECEIVING A START SIGNAL, THE RETURN AIR AND OUTSIDE AIR DAMPERS SHALL BE MODULATED TO MAINTAIN 425 CFM OA CONTINUOUSLY, AND THE AHU'S SUPPLY FAN SHALL BE ENERGIZED. FAN OPERATION SHALL BE MONITORED BY A CURRENT SENSING SWITCH LOCATED IN THE FAN STARTER. MODULATE THE 2-WAY CHILLED WATER VALVE TO MAINTAIN A COOLING COIL LEAVING AIR TEMPERATURE SETPOINT OF 54°F (ADJUSTABLE). MODULATE THE SUPPLY FAN SPEED BETWEEN MINIMUM AIR FLOW OF 1700 CFM (ADJUSTABLE) AND MAXIMUM AIRFLOW OF 3400 CFM TO MAINTAIN A SPACE TEMPERATURE SETPOINT TARGET OF 72°F (ADJUSTABLE). IF SPACE TEMPERATURE DROPS BELOW SETPOINT (72°F; ADJUSTABLE) FAN SHALL BE MODULATE TO LOW SPEED TO PRODUCE 2600 CFM.

OCCUPIED HEATING MODE: UPON A FALL IN SPACE TEMPERATURE BELOW THE HEATING SETPOINT OF 68°F (ADJUSTABLE), THE DIGITAL CONTROLLER SHALL MODULATE THE SUPPLY FAN VFD TO 2600 CFM AIR FLOW, AND MODULATE OR ENABLE THE FIRST STAGE OF HEAT, AND MODULATE THE OUTSIDE AIR DAMPER TO MAINTAIN 425 CFM OA. AFTER A 10 MINUTE DELAY (ADJUSTABLE) AND FURTHER DROP IN SPACE TEMPERATURE BELOW 65°F (ADJUSTABLE), THE ELECTRIC HEATER SHALL MODULATE OR ENERGIZE STAGE 2 IN ORDER TO MAINTAIN SPACE TEMPERATURE. ONCE SPACE HEATING SETPOINT IS MAINTAINED THE REVERSE SEQUENCE SHALL OCCUR UNTIL THE SPACE TEMPERATURE FALLS BELOW THE HEATING SETPOINT.

HUMIDITY CONTROL: UPON A RISE IN SPACE RELATIVE HUMIDITY ABOVE 70% (ADJUSTABLE), THE CHILLED WATER VALVE SHALL BE DRIVEN TO ITS FULL OPEN POSITION. SIMULTANEOUSLY, THE AHU'S ELECTRIC HEATER SHALL BE MODULATED TO MAINTAIN SPACE TEMPERATURE SETPOINT. THIS SEQUENCE SHALL CONTINUE UNTIL THE SPACE RELATIVE HUMIDITY DROPS BELOW 65% (ADJUSTABLE).

SAFETY:

1. SMOKE DETECTION: DUCT MOUNTED SMOKE DETECTORS SHALL BE DIRECTLY HARD WIRED TO DE-ENERGIZE SUPPLY FAN UPON DETECTION OF PRODUCTS OF COMBUSTION. IF PRODUCTS OF COMBUSTION ARE SENSED BY DUCT MOUNTED SMOKE DETECTOR THEN THE SUPPLY FAN SHALL BE DE-ENERGIZED, THE CHILLED WATER VALVE SHALL CLOSE, THE OUTSIDE AIR DAMPER SHALL CLOSE, AND THE EXHAUST FAN EF-1 SHALL BE DE-ENERGIZED.

ALARMS:

1. DIRTY FILTER: IF THE DIFFERENTIAL PRESSURE SENSOR ACROSS FILTER IS GREATER THAN 1" (ADJUSTABLE) ABOVE CLEAN FILTER DIFFERENTIAL PRESSURE, A DIRTY FILTER ALARM SHALL BE INITIATED AT OPERATOR'S CONTROL STATION.
2. SMOKE DETECTOR: IF PRODUCTS OF COMBUSTION ARE SENSED BY DUCT MOUNTED SMOKE DETECTOR, AN ALARM SIGNAL SHALL BE INITIATED AND THE SAFETY SEQUENCE FOR SMOKE DETECTION SHALL BE ACTIVATED.
3. FAN MALFUNCTION: IF CURRENT SENSOR DETECTS CURRENT OUT OF NORMAL OPERATING RANGE, ACTIVATE FAN MALFUNCTION ALARM.

SEQUENCE OF OPERATIONS – EF

EF-1 – EXHAUST FAN: EXHAUST FAN EF-1 SHALL BE ENERGIZED AND WIRED TO OPERATE WHEN AHU-5 SUPPLY FAN IS ENERGIZED. EXHAUST FAN EF-1 SHALL DE-ENERGIZE WHEN AHU-5 SUPPLY FAN IS DE-ENERGIZED.

EF-2,3 – EXHAUST FANS: EXHAUST FAN SHALL BE ENERGIZED AND WIRED TO OPERATE WHEN ROOM LIGHTS ARE TOGGLED "ON". EXHAUST FAN SHALL DE-ENERGIZE AFTER A 10-MINUTE TIME DELAY WHEN ROOM LIGHTS ARE TOGGLED "OFF".

MECHANICAL NOTES

GENERAL:

A. THE COMPLETE MECHANICAL SYSTEM WHICH SHALL BE PROVIDED BY THE CONTRACTOR SHALL INCLUDE ALL WORK, MATERIALS AND APPARATUSES SPECIFIED HEREINAFTER AND INDICATED ON THE DRAWINGS. ALL WORKMANSHIP SHALL BE OF THE HIGHEST QUALITY AND NO SUBSTANDARD WORK WILL BE ACCEPTED.

B. PROVIDE ALL WORK AND MECHANICAL SYSTEM COMPONENTS REQUIRED, AS SPECIFIED, AND INDICATED ON THE DRAWINGS. THE WORK SHALL INCLUDE COMPLETE TESTING OF ALL MECHANICAL SYSTEMS AT THE COMPLETION OF THE WORK AND MAKING ANY CHANGES AND ADJUSTMENTS NECESSARY FOR THE PROPER FUNCTIONING OF THE SYSTEMS.

C. MAKE A THOROUGH EXAMINATION OF THE SITE AND THE CONTRACT DOCUMENTS PRIOR TO EXECUTING THE CONTRACT. NO CLAIM FOR ADDITIONAL COMPENSATION WILL BE RECOGNIZED FOR DIFFICULTIES ENCOUNTERED WHICH AN EXAMINATION OF SITE CONDITIONS AND CONTRACT DOCUMENTS WOULD HAVE REVEALED.

D. THE PLANS ARE GENERALLY DIAGRAMMATIC. COORDINATE ALL WORK WITH OTHER TRADES AS REQUIRED TO AVOID INTERFERENCES BETWEEN TRADES (i.e. BEAMS, CONDUITS, EQUIPMENT, PIPING, ETC).

E. ALL CONTRACTORS ARE RESPONSIBLE TO EXAMINE THE EXISTING CONDITIONS AND PROJECT DOCUMENTS PRIOR TO COMMENCING WORK ON BIDS.

F. THESE DRAWINGS ARE DIAGRAMMATIC AND INDICATE THE DESIGN INTENT OF WORK TO BE PERFORMED UNDER THIS CONTRACT.

G. COORDINATE LOCATION OF ALL DUCTWORK, PIPING, EQUIPMENT, ETC WITH ALL TRADES PRIOR TO INSTALLATION. PROVIDE THE REQUIRED CLEARANCES AROUND ALL ELECTRICAL PANELS, SWITCHGEAR, ETC. IF CONFLICTS EXIST, THEY SHALL BE BROUGHT TO THE ENGINEER OF RECORD PRIOR TO RESOLVING CONFLICT AND PRIOR TO INSTALLATION.

H. THE COMPLETE MECHANICAL SYSTEM WHICH SHALL BE PROVIDED BY THE CONTRACTOR SHALL INCLUDE ALL WORK, MATERIALS AND APPARATUSES SPECIFIED HEREINAFTER AND INDICATED ON THE DRAWINGS. ALL WORKMANSHIP SHALL BE OF THE HIGHEST QUALITY AND NO SUBSTANDARD WORK WILL BE ACCEPTED.

I. PROVIDE ALL WORK AND MECHANICAL SYSTEM COMPONENTS REQUIRED, AS SPECIFIED, AND INDICATED ON THE DRAWINGS. THE WORK SHALL INCLUDE COMPLETE TESTING OF ALL MECHANICAL SYSTEMS AT THE COMPLETION OF THE WORK AND MAKING ANY CHANGES AND ADJUSTMENTS NECESSARY FOR THE PROPER FUNCTIONING OF THE SYSTEMS.

J. MAKE A THOROUGH EXAMINATION OF THE SITE AND THE CONTRACT DOCUMENTS PRIOR TO EXECUTING THE CONTRACT. NO CLAIM FOR ADDITIONAL COMPENSATION WILL BE RECOGNIZED FOR DIFFICULTIES ENCOUNTERED WHICH AN EXAMINATION OF SITE CONDITIONS AND CONTRACT DOCUMENTS WOULD HAVE REVEALED.

K. THE PLANS ARE GENERALLY DIAGRAMMATIC. COORDINATE ALL WORK WITH OTHER TRADES AS REQUIRED TO AVOID INTERFERENCES BETWEEN TRADES (i.e. BEAMS, CONDUITS, EQUIPMENT, PIPING, ETC).

MECHANICAL LEGEND

SYMBOL	DESCRIPTION
'EQUIP'	EQUIPMENT MARK
⟨#⟩	KEYED NOTES
	CONNECTION DATUM: NEW TO EXISTING

ABBREVIATIONS:

A/E	ARCHITECT/ENGINEER	FPM	FEET PER MINUTE
AFF	ABOVE FINISHED FLOOR	FT	FOOT (FEET)
AHU	AIR HANDLING UNIT	GPM	GALLONS PER MINUTE
AHJ	AUTHORITY HAVING JURISDICTION	HP	HORSEPOWER
ANSI	AMERICAN NATIONAL STANDARDS INSTITUTE	IN	INCHES
AI	ANALOG INPUT	kW	KILOWATT
AO	ANALOG OUTPUT	MAX	MAXIMUM
AP	ACCESS PANEL	MB	MIXING BLOCK
BFG	BELOW FINISHED GRADE	MBtuH	THOUSAND BTU PER HOUR
BHP	BRAKE HORSEPOWER	MCA	MINIMUM CIRCUIT AMPACITY
BTU	BRITISH THERMAL UNITS	MIN	MINIMUM
CFM	CUBIC FEET PER MINUTE	MOCP	MAXIMUM OVERCURRENT PROTECTION
CH	CHILLER	NA	NOT APPLICABLE
CHWR	CHILLED WATER RETURN	NC	NOISE CRITERIA
CHWS	CHILLED WATER SUPPLY	NTS	NOT TO SCALE
COND	CONDENSATE	OA	OUTSIDE AIR
DDC	DIRECT DIGITAL CONTROL	P	PUMP
DI	DIGITAL INPUT	RA	RETURN AIR
DO	DIGITAL OUTPUT	RAR	RETURN AIR REGISTER
DP	DIFFERENTIAL PRESSURE SENSOR	RPM	REVOLUTIONS PER MINUTE
EA	EXHAUST AIR	SA	SUPPLY AIR
EF	EXHAUST FAN	SP	STATIC PRESSURE SENSOR
EL	ELEVATION	TAB	TEST, ADJUST & BALANCE
ER	EXHAUST REGISTER	TEMP	TEMPERATURE OR TEMPORARY
EXIST	EXISTING	TYP	TYPICAL
°Fdb	DEGREES FAHRENHEIT DRY BULB	UL	UNDERWRITERS LABORATORY
°Fwb	DEGREES FAHRENHEIT WET BULB	VFD	VARIABLE FREQUENCY DRIVE
FLA	FULL LOAD AMPS	WC	WATER COLUMN

SYMBOL	DESCRIPTION
	EXISTING OBJECT OR CONSTRUCTION
	EXISTING OBJECT OR CONSTRUCTION TO BE DEMOLISHED
	NEW OBJECT OR CONSTRUCTION TO BE PROVIDED
	DIRECTION OF FLOW
	PIPING UP
	PIPING DOWN
	TOP BRANCH CONNECTION
	BOTTOM BRANCH CONNECTION
	SUPPLY AIR DUCT SECTION
	RETURN OR OUTSIDE AIR DUCT SECTION
	EXHAUST AIR DUCT SECTION
	FLEXIBLE DUCT
	ROUND OR RECTANGULAR DUCT TAKE-OFF FITTING WITH BALANCING DAMPER – SEE DETAIL G/M5.1.
	MOTORIZED AIR CONTROL DAMPER
	MANUAL AIR BALANCING DAMPER
	DUCT MOUNTED SMOKE DETECTOR
UC	DOOR UNDERCUT (3/4" UON)
(T)	THERMOSTAT CONTROLLER
	SPACE TEMPERATURE/HUMIDITY SENSOR
	MOTOR STARTER / DISCONNECT

PERMIT DOCUMENTS
MAY 2015

CITY OF TAMPA
CONTRACT ADMINISTRATION DEPARTMENT
PLANNING AND DESIGN DIVISION
306 E. JACKSON STREET 4 NORTH
TAMPA, FLORIDA 33602
p: 813. 274. 8456 – f: 813. 274. 8080
url: www.tampagov.net

James E. Jackson, Jr. AIA, NOMA
City Architect
Edward D. Rice, AIA
Project Architect
Kevin L. Henika, AIA
Project Architect
Thomas A. Hester, Sr., AIA, NOMA
Project Architect
Kinsey C. Tillman
Drafting Technician
Jerry P. Sanders
Drafting Technician
Byron K. Thomas, LEED GA
Drafting Technician

MEP CONSULTANT
HALL ENGINEERING GROUP
14499 N. Dale Mabry Hwy.
Suite 179
Tampa, FL, USA 33618-2042
Tel: 813.374.2121
FL. C.O.A. #: 27620

- HALL ENGINEERING GROUP, INC. RETAINS INTELLECTUAL AND PHYSICAL RIGHTS TO THIS DOCUMENT AND ITS CONTENT AND PROHIBITS ITS PUBLISHING, DISCLOSURE OR REPRODUCTION WITHOUT CONSENT.
- THIS DOCUMENT IS VALID FOR 12 MONTHS FROM DATE OF ENGINEER'S SIGNATURE AND SEAL.

STRUCTURAL CONSULTANT
BROADWAY ENGINEERING
1335 W. CASS ST.
TAMPA, FLORIDA 33606
(813) 251-9244
FAX (813) 251-9330

CIVIL CONSULTANT
MILLS AND ASSOCIATES, INC.
3242 HENDERSON BOULEVARD
SUITE 300
TAMPA, FLORIDA 33609
(813) 876-5869

LANDSCAPE CONSULTANT

WAYNE C. PAPY CENTER
ADDITION AND RENOVATION
6925 N. FLORIDA AVENUE
TAMPA, FLORIDA 33604

FILE NUMBER

PROJECT NUMBER

ISSUE DATE
MAY, 2015

DRAWN BY
RM

REVISIONS

PROFESSIONAL SEAL

JOHN M. SPIERTO, P.E.; FL. REG. #: 58182

SCALE: AS NOTED

MECHANICAL NOTES, LEGEND, SCHEDULES, & CONTROLS

SHEET NUMBER
M1.0
---- OF x

Z:\2014 projects\0414b wayne c papy athletic center-lobby exp\Drawings\MEP\sheet set\0414B_M1.0 Mechanical Notes, Legend, Schedules, & Controls.dwg Jun.2.2015 11:45 am

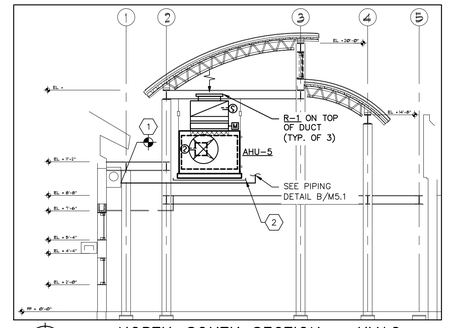

02 NORTH-SOUTH SECTION – HVAC
SCALE: 3/16" = 1'-0"

HVAC NOTES

A. PAINT ALL EXPOSED PIPE & DUCT INSULATION WITH COLOR AS DIRECTED BY ARCHITECT.

HVAC DRAWING KEYNOTES

1. CONNECT NEW CHILLED WATER PIPING TO EXISTING PIPING IN SHROUD OUTSIDE THE BUILDING. ISOLATE NEW PIPING WITH BALL VALVES.
2. INSTALL UNIT ENTIRELY WITHIN AN AUXILIARY DRAIN PAN; PROVIDE FLOAT SWITCH AND INTERLOCK WITH SUPPLY FAN. PAINT BOTTOM OF DRAIN PAN WITH COLOR AS DIRECTED BY ARCHITECT.
3. INSTALL 3/4" CONDENSATE DRAIN PIPING TO BUILDING EXTERIOR AND TERMINATE DOWN IN DRYWELL OUTSIDE – SEE DETAIL J/M5.1.
4. REMOVE EXISTING EXHAUST FAN AND ASSOCIATED DUCTWORK SERVING EXISTING RESTROOM(S) UP TO POINT OF EXTERIOR PENETRATION.
5. PROVIDE NEW EXHAUST FAN, DUCTWORK, AND ACCESSORIES. REUSE EXISTING HOLE IN ROOF OR WALL AND ENLARGE OPENING AS NECESSARY FOR NEW EQUIPMENT INSTALLATION; FIELD COORDINATE EXACT LOCATIONS.
6. BLANK OFF EXISTING OPENING IN EXTERIOR WALL AND SEAL WATER TIGHT.
7. REMOVE EXISTING SUPPLY DIFFUSERS AND RUNOUT DUCTWORK FROM AHU-3 SERVING EXISTING CORRIDOR 102; PATCH AHU-3 SUPPLY MAIN DUCT. PROVIDE NEW DUCTWORK AND SUPPLY DIFFUSERS AS INDICATED ON FLOOR PLAN.
8. REMOVE EXISTING RETURN REGISTER AND RUNOUT DUCTWORK FROM AHU-3 SERVING EXISTING CORRIDOR 102; PATCH AHU-3 RETURN MAIN DUCT.
9. PROVIDE ALL REQUIRED CONTROL AND ELECTRICAL COMPONENTS AND PROGRAM NEW AIR HANDLING UNIT TO BE CONTROLLED & MONITORED BY EXISTING DDC BUILDING AUTOMATION SYSTEM; COORDINATE WITH OWNER'S CONTROLS CONTRACTOR.
10. CONTRACTOR VERIFY THAT OUTLET HAS A MINIMUM FREE AREA OF 0.5 SQUARE FT. IF NOT, PROVIDE 18x18 OA LOUVER WITH 18" DEEP FULL-SIZE PLENUM BEHIND LOUVER; RUSKIN ELF-375DX OR EQUAL.
11. INTERLOCK EXHAUST FAN WITH ROOM LIGHT SWITCH; COORDINATE WITH ELECTRICAL CONTRACTOR.
12. PROVIDE CHANNEL SUPPORTS UNDER UNIT – SEE DETAILS A/M5.1 & D/M5.2. LOCATE CHANNELS DIRECTLY UNDER STRUCTURAL BEAMS ABOVE – SEE STRUCTURAL DRAWINGS FOR EXACT LOCATIONS.

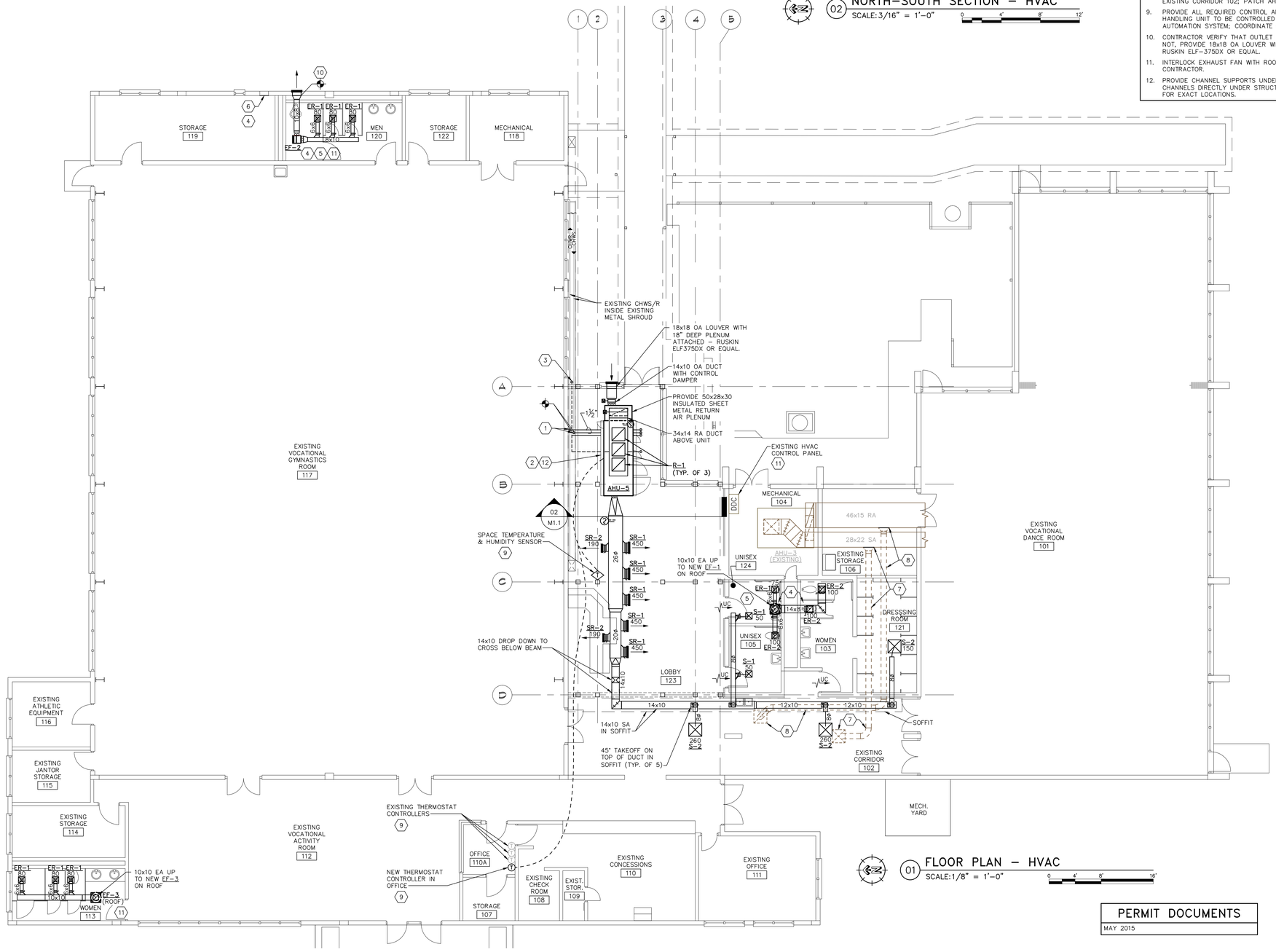

01 FLOOR PLAN – HVAC
SCALE: 1/8" = 1'-0"

PERMIT DOCUMENTS
MAY 2015

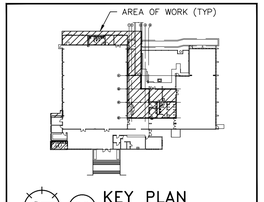

00 KEY PLAN
SCALE: N.T.S

CITY OF TAMPA
CONTRACT ADMINISTRATION DEPARTMENT
PLANNING AND DESIGN DIVISION
306 E. JACKSON STREET 4 NORTH
TAMPA, FLORIDA 33602
p: 813. 274. 8456 – f: 813. 274. 8080
url: www.tampagov.net

James E. Jackson, Jr. AIA, NOMA
City Architect

Edward D. Rice, AIA
Project Architect

Kevin L. Henika, AIA
Project Architect

Thomas A. Hester, Sr., AIA, NOMA
Project Architect

Kinsey C. Tillman
Drafting Technician

Jerry P. Sanders
Drafting Technician

Byron K. Thomas, LEED GA
Drafting Technician

MEP CONSULTANT
HALL ENGINEERING GROUP
14499 N. Dale Mabry Hwy.
Suite 179
Tampa, FL, USA 33618-2042
Tel: 813.374.2121
FL. C.O.A. #: 27620

STRUCTURAL CONSULTANT
BROADWAY ENGINEERING
1335 W. CASS ST.
TAMPA, FLORIDA 33606
(813) 251-9244
FAX (813) 251-9330

CIVIL CONSULTANT
MILLS AND ASSOCIATES, INC.
3242 HENDERSON BOULEVARD
SUITE 300
TAMPA, FLORIDA 33609
(813) 876-5869

LANDSCAPE CONSULTANT

HALL ENGINEERING GROUP INC. RETAINS OWNERSHIP OF ALL DRAWINGS, SPECIFICATIONS, EQUIPMENTS, DATA, OR DESIGN. OR REPRODUCTION, IN WHOLE OR IN PART.
THIS DOCUMENT IS VALID FOR 3 MONTHS FROM THE DATE OF THE ORIGINAL SEAL.

WAYNE C. PAPY CENTER ADDITION AND RENOVATION
6925 N. FLORIDA AVENUE
TAMPA, FLORIDA 33604

FILE NUMBER

PROJECT NUMBER

ISSUE DATE
MAY, 2015

DRAWN BY
RM

REVISIONS

PROFESSIONAL SEAL

JOHN M. SPIERTO, P.E., FL REG. # 58182

SCALE: AS NOTED

HVAC PLANS

SHEET NUMBER
M1.1

---- OF X

Z:\2014 projects\0414b wayne c papy athletic center-lobby exp\Drawings\MEP\sheet set\0414B_M1.1 HVAC Plans.dwg Jun.2,2015 11:45 am

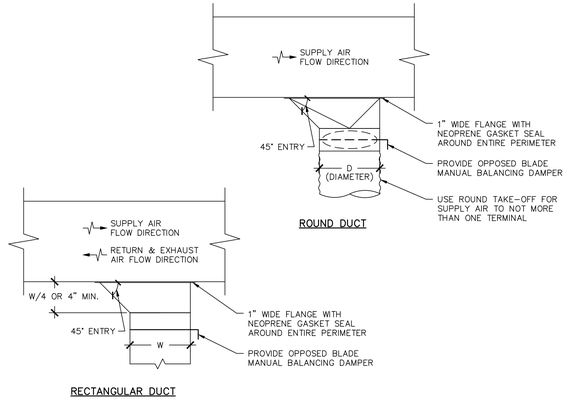

G TYPICAL DUCT TAKE-OFF FITTINGS
SCALE:NTS

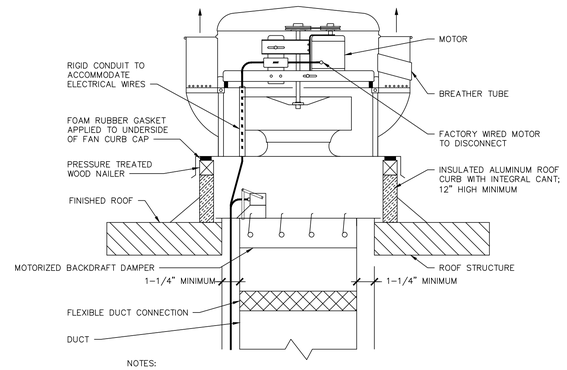

NOTES:

A. SECURE FAN TO CURB AS NECESSARY TO MEET WIND LOADING CODE REQUIREMENTS.

B. SECURE ROOF CURB TO ROOF USING SHEET METAL SCREWS, EXPANSION BOLTS, OR OTHER METHOD CONSISTENT WITH ROOF CONSTRUCTION AS NECESSARY TO MEET WIND LOADING CODE REQUIREMENTS.

D UPBLAST ROOF EXHAUST FAN
SCALE:NTS

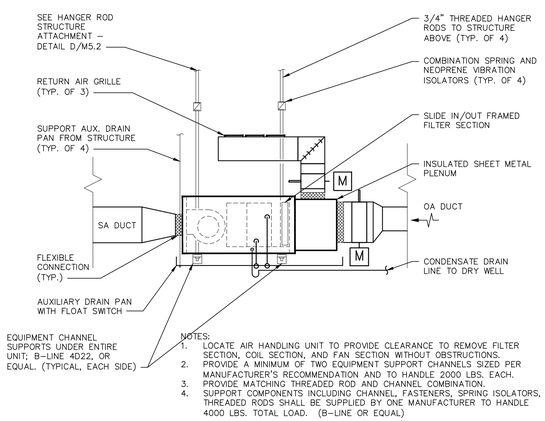

NOTES:
1. LOCATE AIR HANDLING UNIT TO PROVIDE CLEARANCE TO REMOVE FILTER SECTION, COIL SECTION, AND FAN SECTION WITHOUT OBSTRUCTIONS.
2. PROVIDE A MINIMUM OF TWO EQUIPMENT SUPPORT CHANNELS SIZED PER MANUFACTURER'S RECOMMENDATION AND TO HANDLE 2000 LBS. EACH.
3. PROVIDE MATCHING THREADED ROD AND CHANNEL COMBINATION.
4. SUPPORT COMPONENTS INCLUDING CHANNEL, FASTENERS, SPRING ISOLATORS, THREADED RODS SHALL BE SUPPLIED BY ONE MANUFACTURER TO HANDLE 4000 LBS. TOTAL LOAD. (B-LINE OR EQUAL)

A SUSPENDED AIR HANDLING UNIT DETAIL
SCALE:NTS

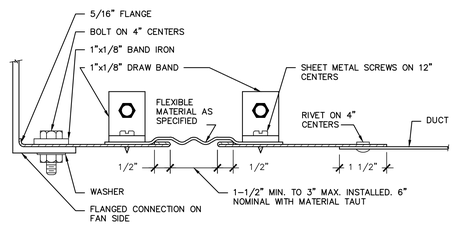

H ROUND FLEXIBLE DUCT CONNECTION DETAIL
SCALE:NTS

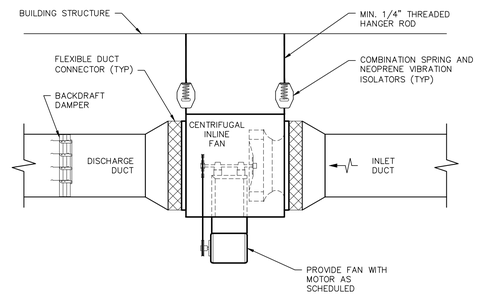

NOTES:

1. INSTALL FAN TO ALLOW ACCESS FOR MAINTENANCE.

E CENTRIFUGAL INLINE FAN
SCALE:NTS

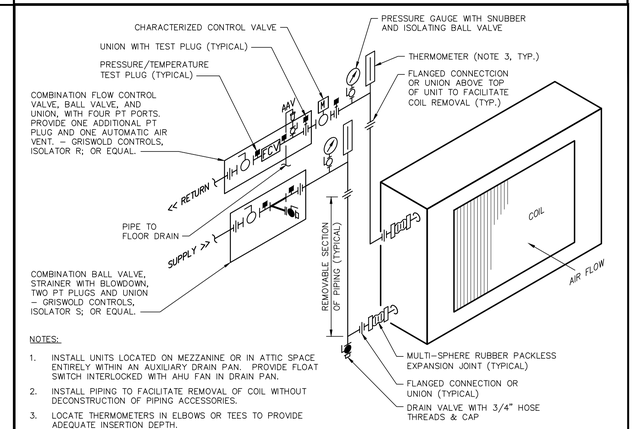

NOTES:

1. INSTALL UNITS LOCATED ON MEZZANINE OR IN ATTIC SPACE ENTIRELY WITHIN AN AUXILIARY DRAIN PAN. PROVIDE FLOAT SWITCH INTERLOCKED WITH AHU FAN IN DRAIN PAN.
2. INSTALL PIPING TO FACILITATE REMOVAL OF COIL WITHOUT DECONSTRUCTION OF PIPING ACCESSORIES.
3. LOCATE THERMOMETERS IN ELBOWS OR TEES TO PROVIDE ADEQUATE INSERTION DEPTH.

B CHILLED WATER COIL PIPING WITH 2-WAY CONTROL VALVE
SCALE:NTS

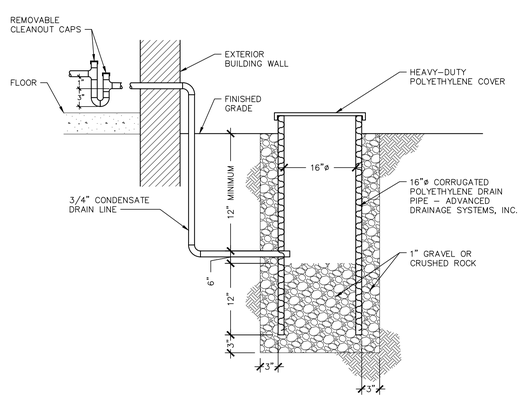

J DRY WELL DETAIL
SCALE:NTS

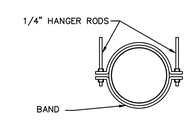

NOTES:

1. PROVIDE TWO (2) 1/4" HANGER RODS SPACED AT 10'-0" MAX. INTERVALS.
2. ROD DIAMETER BASED ON DUCT ONLY, NO EXTERNAL LOADS SHALL BE HUNG FROM DUCTWORK.

F ROUND DUCT HANGERS DETAIL
SCALE:NTS

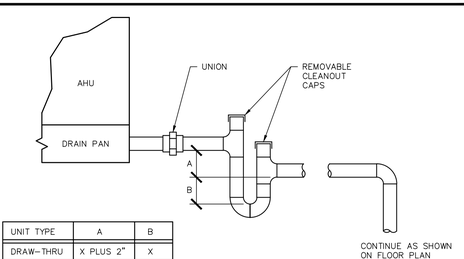

UNIT TYPE	A	B
DRAW-THRU	X PLUS 2"	X
BLOW-THRU	1" MIN.	2X

WHERE X=STATIC PRESSURE IN PAN

NOTES:

1. DRAIN LINE SHALL BE AT LEAST THE SAME SIZE AS THE CONNECTION ON THE DRAIN PAN (1" MINIMUM).
2. DRAIN LINE SHALL SLOPE DOWN MINIMUM 1/8" PER FOOT.

C CONDENSATE DRAIN DETAIL
SCALE:NTS

PERMIT DOCUMENTS
MAY 2015

CITY OF TAMPA
CONTRACT ADMINISTRATION DEPARTMENT
PLANNING AND DESIGN DIVISION
306 E. JACKSON STREET 4 NORTH
TAMPA, FLORIDA 33602
p: 813. 274. 8456 – f: 813. 274. 8080
url: www.tampagov.net

James E. Jackson, Jr. AIA, NOMA
City Architect

Edward D. Rice, AIA
Project Architect

Kevin L. Henika, AIA
Project Architect

Thomas A. Hester, Sr., AIA, NOMA
Project Architect

Kinsey C. Tillman
Drafting Technician

Jerry P. Sanders
Drafting Technician

Byron K. Thomas, LEED GA
Drafting Technician

MEP CONSULTANT
HALL ENGINEERING GROUP
14499 N. Dale Mabry Hwy.
Suite 179
Tampa, FL, USA 33618-2042
Tel: 813.374.2121
FL. C.O.A. #: 27620

STRUCTURAL CONSULTANT
BROADWAY ENGINEERING
1335 W. CASS ST.
TAMPA, FLORIDA 33606
(813) 251-9244
FAX (813) 251-9330

CIVIL CONSULTANT
MILLS AND ASSOCIATES, INC.
3242 HENDERSON BOULEVARD
SUITE 300
TAMPA, FLORIDA 33609
(813) 876-5868

LANDSCAPE CONSULTANT

HALL ENGINEERING GROUP – ALL ENGINEERING, CONSULTING, REPORTS, DRAWINGS, SPECIFICATIONS, ESTIMATES, COST ESTIMATES, EQUIPMENT, SOFTWARE, DATA, DOCUMENTS, DISCLOSURE OR REPRODUCTION THIS DOCUMENT IS VALID FOR 5 MONTHS FROM THE DATE OF THE COMPLETION OF THE PLANS.

WAYNE C. PAPY CENTER ADDITION AND RENOVATION
6925 N. FLORIDA AVENUE
TAMPA, FLORIDA 33604

FILE NUMBER

PROJECT NUMBER

ISSUE DATE
MAY, 2015

DRAWN BY
RM

REVISIONS

PROFESSIONAL SEAL

JOHN M. SPIERTO, P.E.; FL. REG. #: 58182

SCALE: AS NOTED

HVAC DETAILS

SHEET NUMBER
M5.1

---- OF X

Z:\2014 projects\0414b wayne c papy athletic center-lobby exp\Drawings\MEP\sheet set\0414B_M5.1 HVAC Details.dwg Jun.2,2015 11:46 am

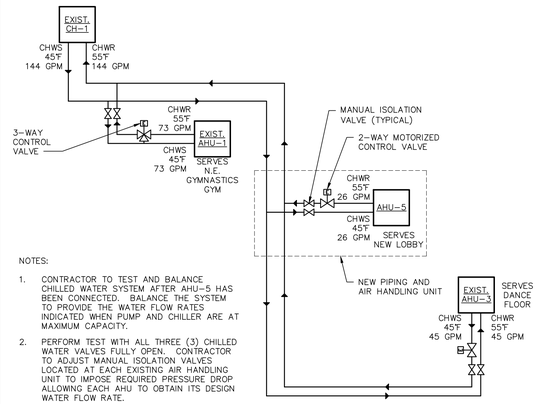

NOTES:

1. CONTRACTOR TO TEST AND BALANCE CHILLED WATER SYSTEM AFTER AHU-5 HAS BEEN CONNECTED. BALANCE THE SYSTEM TO PROVIDE THE WATER FLOW RATES INDICATED WHEN PUMP AND CHILLER ARE AT MAXIMUM CAPACITY.
2. PERFORM TEST WITH ALL THREE (3) CHILLED WATER VALVES FULLY OPEN. CONTRACTOR TO ADJUST MANUAL ISOLATION VALVES LOCATED AT EACH EXISTING AIR HANDLING UNIT TO IMPOSE REQUIRED PRESSURE DROP ALLOWING EACH AHU TO OBTAIN ITS DESIGN WATER FLOW RATE.

E CHILLED WATER PIPING SCHEMATIC
SCALE:NTS

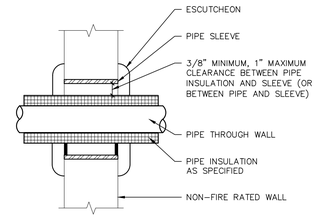

PIPE PENETRATION THROUGH NON-FIRE RATED WALL

C PIPE PENETRATION THROUGH NON-FIRE RATED WALL
SCALE:NTS

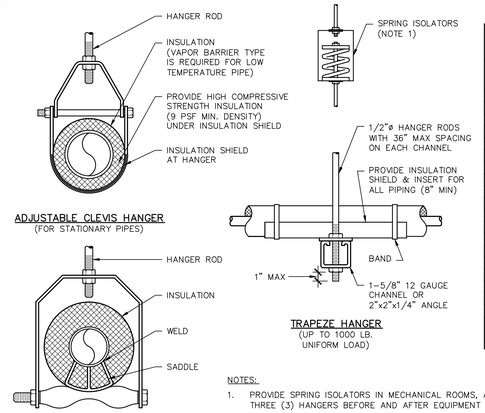

PIPE SUPPORT MAX. SPACING	
NOMINAL PIPE SIZE	PIPE RUN
IN.	LINEAR FT.
≤ 3/4"	7
1	7
1 1/4	7
1 1/2	9
2	10
2 1/2	11
3	12
4	14
5	16
6	17
8	19
10	22
12	23
14	25
16	27
18	28
20	30
24	32

NOTE: FOR TRAPEZE HANGERS USE SPACING OF SMALLEST SIZE ON TRAPEZE.

NOTES:

1. PROVIDE SPRING ISOLATORS IN MECHANICAL ROOMS, AND ON FIRST THREE (3) HANGERS BEFORE AND AFTER EQUIPMENT CONNECTIONS.

A TYPICAL PIPE HANGERS
SCALE:NTS

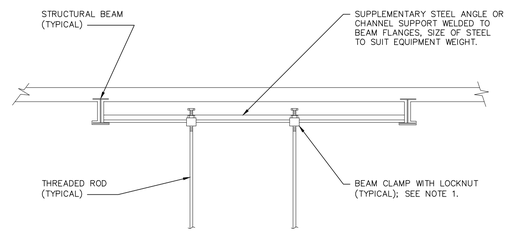

NOTE:

1. BEAM CLAMPS TO BE B-LINE B-351L (OR EQUAL) FOR EQUIPMENT; B-LINE B-3036L (OR EQUAL) FOR DUCTWORK & PIPING.

D SUSPENDED EQUIPMENT STRUCTURE ATTACHMENT DETAIL
SCALE:NTS

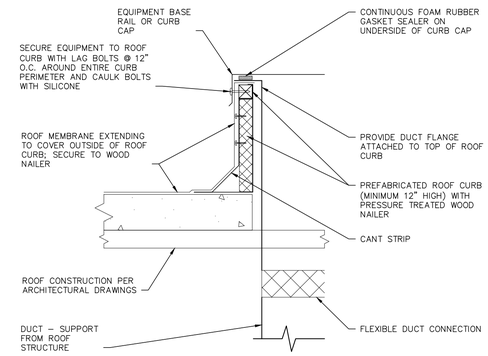

B ROOF CURB DETAIL
SCALE:NTS

PERMIT DOCUMENTS
MAY 2015

CITY OF TAMPA
CONTRACT ADMINISTRATION DEPARTMENT
PLANNING AND DESIGN DIVISION
306 E. JACKSON STREET 4 NORTH
TAMPA, FLORIDA 33602
p: 813. 274. 8456 – f: 813. 274. 8080
url: www.tampagov.net

James E. Jackson, Jr. AIA, NOMA
City Architect
Edward D. Rice, AIA
Project Architect
Kevin L. Henika, AIA
Project Architect
Thomas A. Hester, Sr., AIA, NOMA
Project Architect
Kinsey C. Tillman
Drafting Technician
Jerry P. Sanders
Drafting Technician
Byron K. Thomas, LEED GA
Drafting Technician

MEP CONSULTANT
HALL ENGINEERING GROUP
14499 N. Dale Mabry Hwy.
Suite 179
Tampa, FL, USA 33618-2042
Tel: 813.374.2121
FL. C.O.A. #: 27620

STRUCTURAL CONSULTANT
BROADWAY ENGINEERING
1335 W. CASS ST.
TAMPA, FLORIDA 33606
(813) 251-9244
FAX (813) 251-9330

CIVIL CONSULTANT
MILLS AND ASSOCIATES, INC.
3242 HENDERSON BOULEVARD
SUITE 300
TAMPA, FLORIDA 33609
(813) 876-5869

LANDSCAPE CONSULTANT

ALL ENGINEERING GROUP, INC. RETAINS OWNERSHIP OF ALL RIGHTS, TITLES AND INTERESTS IN THIS DOCUMENT. REPRODUCTION, REUSE, DISCLOSURE OR REPRODUCTION OF THIS DOCUMENT IS VALID FOR A MEANING FROM ALL ENGINEERING GROUP, INC.

WAYNE C. PAPY CENTER ADDITION AND RENOVATION
6925 N. FLORIDA AVENUE
TAMPA, FLORIDA 33604

FILE NUMBER

PROJECT NUMBER

ISSUE DATE
MAY, 2015

DRAWN BY
RM

REVISIONS

PROFESSIONAL SEAL

JOHN M. SPIERTO, P.E.; FL. REG. #: 58182

SCALE: AS NOTED

HVAC DETAILS

SHEET NUMBER
M5.2

---- OF X

Z:\2014 projects\0414b wayne c papy athletic center-lobby exp\Drawings\MEP\sheet set\0414B_M5.2 HVAC Details.dwg Jun.2.2015 11:46 am

Z:\2014 projects\0414b wayne c papy athletic center-lobby exp\Drawings\MEP\sheet set\0414B_P1.0 Plumbing Notes, Legend, Schedules, & Demolition Plans.dwg Jun.2.2015 11:47 am

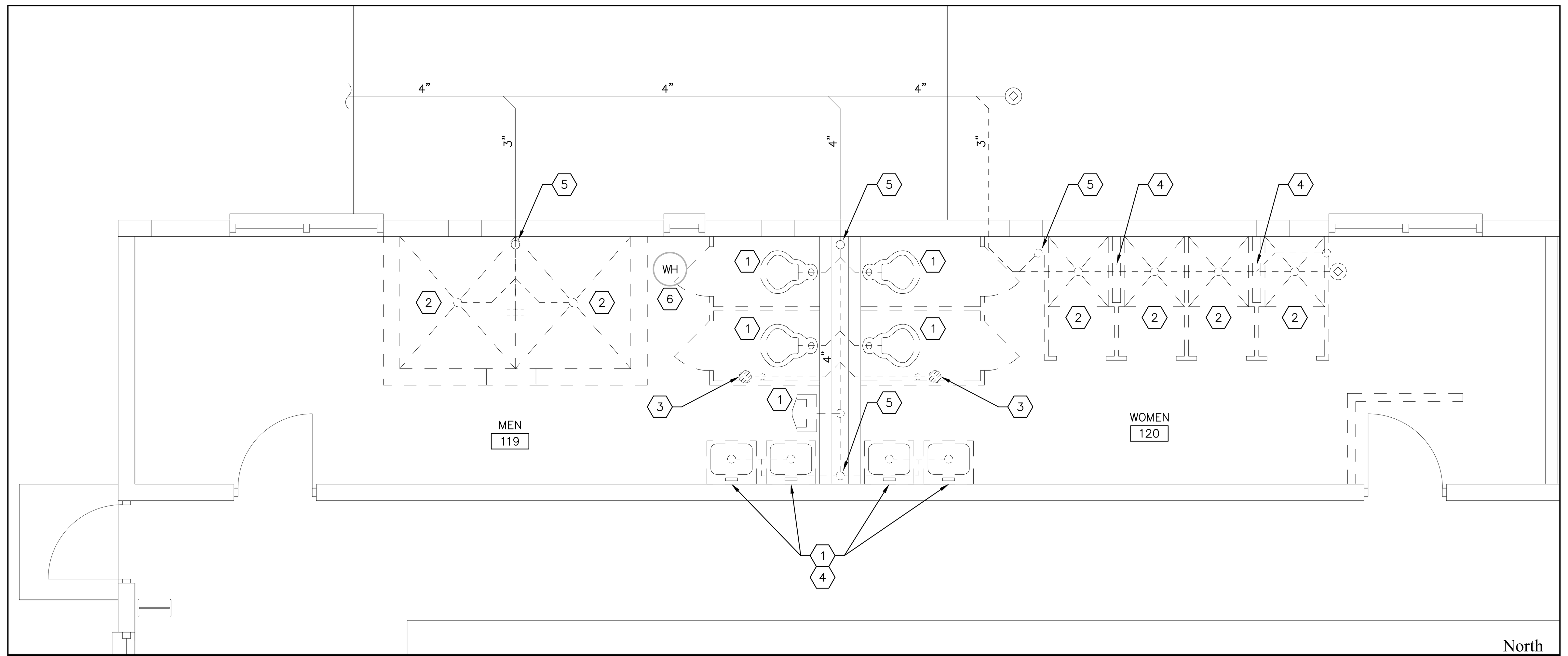

01 P1.0 NORTHEAST RESTROOM - PLUMBING DEMOLITION PLAN

1/4" = 1'-0"

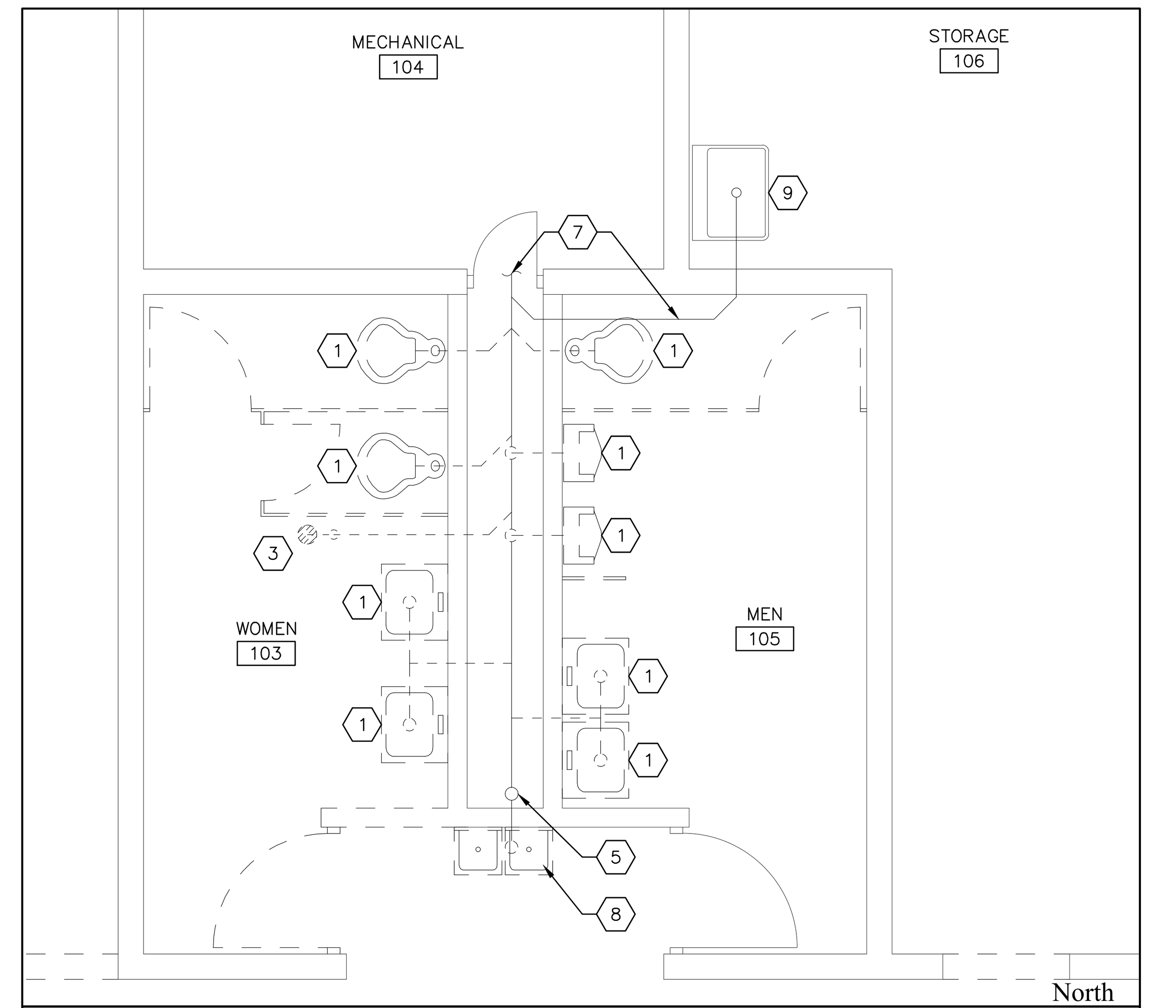

02 P1.0 SOUTH RESTROOM - PLUMBING DEMOLITION PLAN

1/4" = 1'-0"

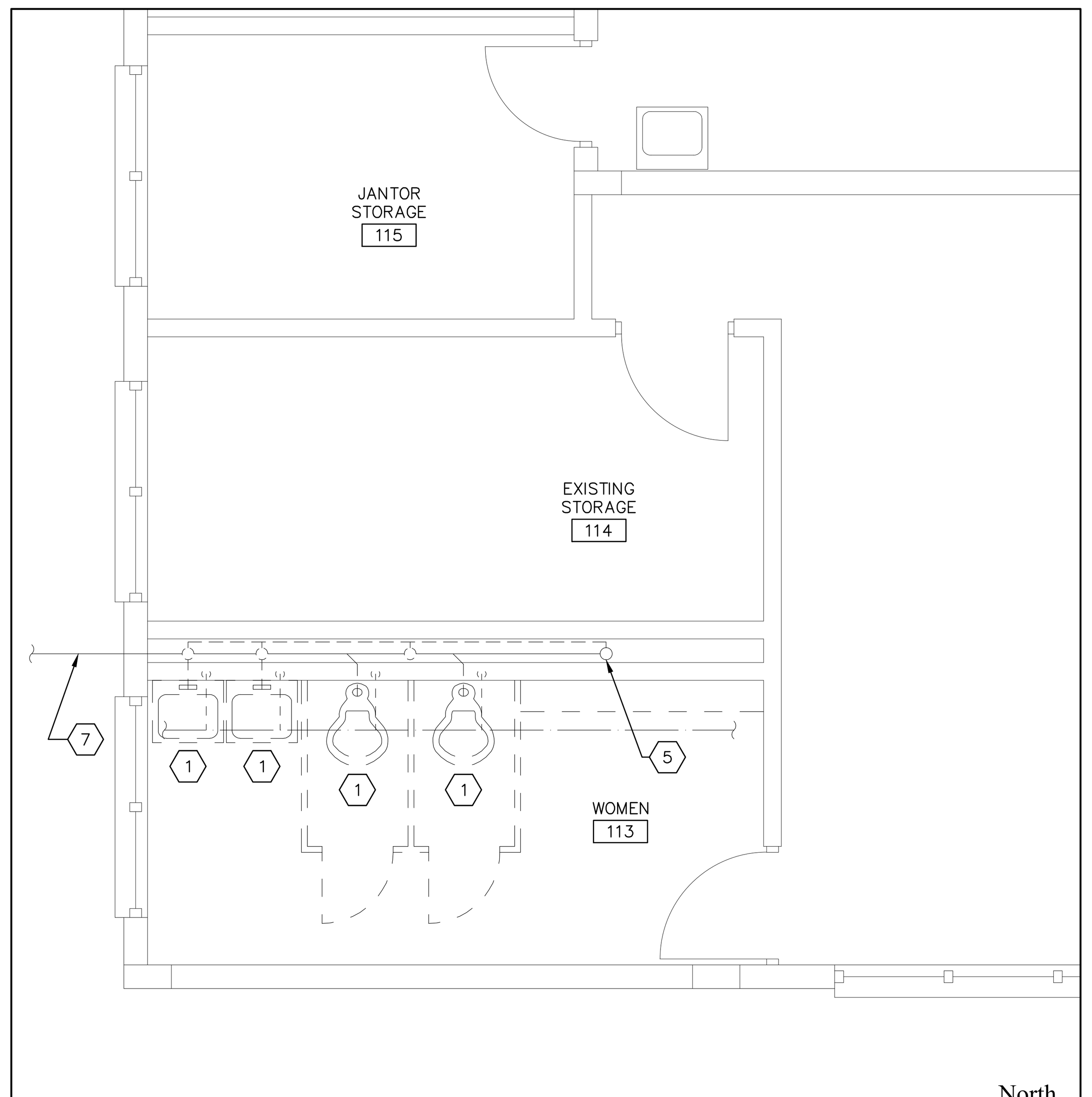

03 P1.0 NORTHWEST RESTROOM - PLUMBING DEMOLITION PLAN

1/4" = 1'-0"

GENERAL PLUMBING NOTES

GENERAL:

A. INSTALL ALL EQUIPMENT AND PIPING WITH SUFFICIENT ACCESS FOR MAINTENANCE.

B. PROVIDE AN ACCESS PANEL AT ALL LOCATIONS WHERE A VALVE OR OTHER DEVICE REQUIRING SERVICE IS INSTALLED BEHIND INACCESSIBLE CEILING OR WALL.

C. ALL FLOOR DRAINS ARE TO BE INSTALLED WITH AUTOMATIC TRAP PRIMERS AND DEEP SEAL P-TRAPS.

D. PROVIDE AND INSTALL A CLEANOUT AT THE BASE OF EACH WASTE SOIL STACK.

E. INSTALL ALL PLUMBING VENTS WITH MINIMUM 2" PIPE, UNLESS OTHERWISE NOTED, AND A MINIMUM OF 10'-0" AWAY FROM HVAC/BUILDING OUTSIDE AIR INTAKES. COORDINATE WITH MECHANICAL CONTRACTOR AND OFFSET VENT PIPING AS REQUIRED.

F. PROVIDE WATER HAMMER ARRESTORS IN ACCORDANCE WITH PDI-WH201 STANDARD GUIDELINES.

G. ALL COPPER PIPE IS TO BE SOLDERED WITH LEAD-FREE SOLDER.

H. PROVIDE A PIPE SLEEVE AT ALL PIPE PENETRATIONS THROUGH FOUNDATION WALLS AND FLOORS.

PLUMBING LEGEND

SYMBOL	DESCRIPTION
'EQUIP'	EQUIPMENT MARK
(#)	KEYED NOTES
	CONNECTION DATUM: NEW TO EXISTING

ABBREVIATIONS:

A/E	ARCHITECT/ENGINEER
AAV	AUTOMATIC AIR VENT
ADA	AMERICANS WITH DISABILITIES ACT
AFF	ABOVE FINISHED FLOOR
AHJ	AUTHORITY HAVING JURISDICTION
ANSI	AMERICAN NATIONAL STANDARDS INSTITUTE
AP	ACCESS PANEL
BFG	BELOW FINISHED GRADE
BFP	BACKFLOW PREVENTER
BHP	BRAKE HORSEPOWER
CO	CLEANOUT
DS	DOWNSPOUT
DCW	DOMESTIC COLD WATER
DHW	DOMESTIC HOT WATER
ECO	EXTERIOR CLEANOUT
EL	ELEVATION
EXIST	EXISTING
EWC	ELECTRIC WATER COOLER
FD	FLOOR DRAIN
FT	FOOT (FEET)
GPM	GALLONS PER MINUTE
HB	HOSE BIB
HP	HORSEPOWER
IN	INCHES
INV	INVERT
LAV	LAVATORY
MAX	MAXIMUM
MCA	MINIMUM CIRCUIT AMPACITY
MIN	MINIMUM
MOCP	MAXIMUM OVERCURRENT PROTECTION
MSB	MOP SERVICE BASIN
NA	NOT APPLICABLE
NIC	NOT IN CONTRACT
NTS	NOT TO SCALE
P	PUMP
PDI	PLUMBING DRAINAGE INSTITUTE
RD	ROOF DRAIN
RPM	REVOLUTIONS PER MINUTE
SAN	SANITARY
SHR	SHOWER
SS	SANITARY SEWER
TEMP	TEMPERATURE / TEMPORARY
TYP	TYPICAL
TMV	THERMOSTATIC MIXING VALVE
UL	UNDERWRITERS LABORATORY
UON	UNLESS OTHERWISE NOTED
VTR	VENT THROUGH ROOF
WC	WATER CLOSET
WCO	WALL CLEANOUT
WH	WATER HEATER / WALL HYDRANT
WHA	WATER HAMMER ARRESTER

SYMBOL	DESCRIPTION
	EXISTING OBJECT OR CONSTRUCTION
	EXISTING OBJECT OR CONSTRUCTION TO BE DEMOLISHED
	NEW OBJECT OR CONSTRUCTION TO BE PROVIDED
	SANITARY SOIL WASTE PIPING
	SANITARY VENT PIPING
	DOMESTIC COLD WATER SUPPLY PIPING
	DOMESTIC HOT WATER SUPPLY PIPING
	DIRECTION OF FLOW
	CAPPED PIPE
	PIPING UP
	PIPING DOWN
	TOP BRANCH CONNECTION
	BOTTOM BRANCH CONNECTION
	FLOOR DRAIN WITH AUTOMATIC TRAP PRIMER AND DEEP SEAL P-TRAP – SEE DETAIL
	CLEAN OUT

PLUMBING FIXTURE SCHEDULE

FIXTURE MARK	FIXTURE DESCRIPTION	ROUGH-IN PIPE SIZES: COLD WATER SUPPLY	HOT WATER SUPPLY	FIXTURE TRAP	FIXTURE DRAIN	MANUFACTURER AND MODEL NUMBER	ACCESSORIES	HEIGHT (A.F.F.)
WC-1	A.D.A. HEIGHT, FLOOR MOUNT, 1.28 GPF MANUAL FLUSH VALVE WATER CLOSET, VITREOUS CHINA, SIPHON JET FLUSHING ACTION, ELONGATED RIM, 1½" TOP SPUD, 2⅛" TRAPWAY.	1"	N/A	4"	4"	KOHLER K-4406	• MANUAL 1.28 GPM FLUSHOMETER • HEAVY DUTY, OPEN FRONT, SOLID PLASTIC, ELONGATED SEAT WITH SELF-SUSTAINING CHECK HINGE	RIM: 16½"
WC-2	FLOOR MOUNT, 1.28 GPF MANUAL FLUSH VALVE WATER CLOSET, VITREOUS CHINA, SIPHON JET FLUSHING ACTION, ELONGATED RIM, 1½" TOP SPUD, 2⅛" TRAPWAY.	1"	N/A	4"	4"	KOHLER K-4405	• MANUAL 1.28 GPM FLUSHOMETER • HEAVY DUTY, OPEN FRONT, SOLID PLASTIC, ELONGATED SEAT WITH SELF-SUSTAINING CHECK HINGE	RIM: 15"
WC-3	A.D.A. HEIGHT, WALL MOUNT, 1.28 GPF MANUAL FLUSH VALVE WATER CLOSET, VITREOUS CHINA, SIPHON JET FLUSHING ACTION, ELONGATED RIM, 1½" TOP SPUD, MIN. 2" TRAPWAY.	1"	N/A	4"	4"	AMERICAN STANDARD 3351.101 KOHLER K-4325 (OR EQUAL)	• MANUAL 1.28 GPF FLUSHOMETER VALVE • HEAVY DUTY, OPEN FRONT, SOLID PLASTIC, ELONGATED SEAT WITH SELF-SUSTAINING CHECK HINGE	RIM: 17"
WC-4	WALL MOUNT, 1.28 GPF MANUAL FLUSH VALVE WATER CLOSET, VITREOUS CHINA, SIPHON JET FLUSHING ACTION, ELONGATED RIM, 1½" TOP SPUD, MIN. 2" TRAPWAY.	1"	N/A	4"	4"	AMERICAN STANDARD 3351.101 KOHLER K-4325 (OR EQUAL)	• MANUAL 1.28 GPF FLUSHOMETER VALVE • HEAVY DUTY, OPEN FRONT, SOLID PLASTIC, ELONGATED SEAT WITH SELF-SUSTAINING CHECK HINGE	RIM: 14"
LAV-1	A.D.A. HEIGHT, WALL MOUNT LAVATORY, 20¾"x18¼", VITREOUS CHINA, FAUCET HOLES ON 4" CENTERS, FRONT OVERFLOW DECK. COLOR: WHITE. INCLUDE WALL HANGER, CONCEALED ARM CARRIER.	½"	---	1¼"	2"	KOHLER K-2032 OR EQUAL, WITH SLOAN ETF-600	• POLISHED CHROME PLATED BRASS, SINGLE INLET PEDESTAL FAUCET; SENSOR ACTIVATED, 0.5 GPM VANDAL RESISTANT SPRAY HEAD, WITH 4" CENTER-SET COVER PLATE. • 1¼" CHROME PLATED BRASS OFFSET DRAIN WITH TAIL PIECE AND PERFORATED STRAINER. • CHROME PLATED BRASS P-TRAP; 1¼" SLIP-JOINT INLET x 1½" ADJUSTABLE OUTLET, WITH CLEANOUT PLUG.	RIM: 34"
LAV-2	WALL MOUNT LAVATORY, 20¾"x18¼", VITREOUS CHINA, FAUCET HOLES ON 4" CENTERS, FRONT OVERFLOW DECK. COLOR: WHITE. INCLUDE WALL HANGER, CONCEALED ARM CARRIER.	½"	---	1¼"	2"	KOHLER K-2032 OR EQUAL, WITH SLOAN ETF-600	• POLISHED CHROME PLATED BRASS, SINGLE INLET PEDESTAL FAUCET; SENSOR ACTIVATED, 0.5 GPM VANDAL RESISTANT SPRAY HEAD, WITH 4" CENTER-SET COVER PLATE. • 1¼" CHROME PLATED BRASS DRAIN WITH TAIL PIECE AND PERFORATED STRAINER. • CHROME PLATED BRASS P-TRAP; 1¼" SLIP-JOINT INLET x 1½" ADJUSTABLE OUTLET, WITH CLEANOUT PLUG.	RIM: 31"
LAV-3	A.D.A. COMPLIANT, COUNTERTOP LAVATORY, SELF-RIMMING, 20"x17" OVAL BASIN, VITREOUS CHINA, WITH OVERFLOW DRAIN, 4" CENTER FAUCET HOLES. COLOR: WHITE.	½"	---	1¼"	2"	KOHLER K-2196-4 OR EQUAL, WITH SLOAN ETF-600	• POLISHED CHROME PLATED BRASS, SINGLE INLET PEDESTAL FAUCET; SENSOR ACTIVATED, 0.5 GPM VANDAL RESISTANT SPRAY HEAD, WITH 4" CENTER-SET COVER PLATE. • 1¼" CHROME PLATED BRASS DRAIN WITH TAIL PIECE AND PERFORATED STRAINER. • CHROME PLATED BRASS P-TRAP; 1¼" SLIP-JOINT INLET x 1½" ADJUSTABLE OUTLET, WITH CLEANOUT PLUG.	PER ARCH.
EWC-1	BI-LEVEL, GREENSPEC LISTED, HIGH-EFFICIENCY ELECTRIC, REFRIGERATED WATER COOLER; WALL-MOUNTED, BARRIER-FREE ACCESS, STAINLESS STEEL BASIN, LEAD-FREE DESIGN, DELIVERING 8 GPH OF 50°F WATER @ 80°F INLET WATER & 90°F AMBIENT AIR TEMPERATURES.	½"	N/A	1¼"	2"	ELKAY EZSTLG8	N/A	MINIMUM SPOUT HEIGHT: 36"/30"

PROJECT NOTES

GENERAL:

A. EXISTING PIPING AND EQUIPMENT LOCATIONS SHOWN ARE APPROXIMATE AND ARE PROVIDED FOR REFERENCE USE ONLY. FIELD VERIFY AND COORDINATE WITH EXACT LOCATIONS OF EXISTING PIPING, EQUIPMENT, ETC.

B. COORDINATE WITH OWNER FOR BUILDING WATER SHUT OFF. AFTER RESTORING WATER TO BUILDING, ASSURE NO LEAKS ARE EVIDENT.

(#) DEMOLITION KEY NOTES

1. REMOVE EXISTING PLUMBING FIXTURE AND ALL ASSOCIATED SANITARY, VENT, AND SUPPLY PIPING BACK TO MAIN PIPING IN CHASE, BEHIND WALL, ABOVE CEILING, OR BELOW FLOOR, AND CAP. COORDINATE WITH NEW FIXTURE LAYOUT FOR EXTENT OF REMOVAL.
2. REMOVE EXISTING SHOWER DRAIN, SHOWER VALVE, SHOWER HEAD, AND ALL ASSOCIATED SANITARY AND SUPPLY PIPING BELOW FLOOR OR BEHIND EXISTING WALL SURFACE.
3. REMOVE EXISTING FLOOR DRAIN AND ASSOCIATED PIPING BACK TO MAIN PIPE RUN AND CAP. TRENCH CONCRETE FLOOR AROUND SANITARY DRAINS AS NECESSARY FOR REMOVAL; PATCH TO MATCH ADJACENT SURFACES. COORDINATE WITH NEW LAYOUT TO DETERMINE EXTENT OF REMOVAL.
4. REMOVE FIXTURE VENT PIPING BACK TO VENT STACK/VENT THRU ROOF. PROVIDE SUPPORTS AS NECESSARY FOR PIPING TO REMAIN.
5. EXISTING VENT STACK TO REMAIN.
6. EXISTING WATER HEATER IN MEZZANINE TO REMAIN.
7. EXISTING SANITARY MAIN PIPE TO REMAIN.
8. REMOVE EWC AND RETURN TO OWNER.
9. EXISTING SERVICE SINK TO REMAIN. KEEP IN SERVICE DURING CONSTRUCTION.

DRAIN & CLEANOUT FIXTURE SCHEDULE

FIXTURE	DESCRIPTION	MANUFACTURER AND MODEL NUMBER
FLOOR DRAIN	6" ROUND NICKEL BRONZE ADJUSTABLE STRAINER HEAD, CAST-IRON FLOOR DRAIN BODY AND COLLAR, 3" DRAIN OUTLET WITH 3" DEEP SEAL P-TRAP, 1/2" TRAP-SEAL PRIMER CONNECTION WITH PRESSURE ACTIVATED TRAP PRIMER VALVE.	ZURN Z415B WATTS FD-100-A
WALL CLEAN OUT	CAST-IRON CLEANOUT TEE; RECESSED, TAPERED THREAD BRONZE PLUG; STAINLESS STEEL OR CHROME-PLATED BRASS WALL ACCESS COVER PLATE; SAME SIZE AS CONNECTED DRAINAGE PIPING; ASME A112.36.2M.	ZURN Z1446 WATTS CO-460-RD J.R. SMITH 4532S
FLOOR CLEAN OUT	CAST-IRON ADJUSTABLE HOUSING FLOOR CLEANOUT; RAISED, TAPERED THREAD BRONZE CLOSURE PLUG; NEOPRENE RUBBER GASKET; NICKEL-BRONZE ROUND SCORIATED TOP COVER; SAME SIZE AS CONNECTED DRAINAGE PIPING; ASME A112.36.2M.	ZURN Z1400-K WATTS CO-200-RX (OR EQUAL)
EXTERIOR CLEAN OUT	CAST-IRON ADJUSTABLE HOUSING CLEANOUT FERRULE; RECESSED, TAPERED THREAD, BRONZE CLOSURE PLUG; NEOPRENE RUBBER GASKET; SAME SIZE AS CONNECTED DRAINAGE PIPING; INSTALL IN 24" X 24" X 12" DEEP CONCRETE PAD FLUSH WITH GRADE; ASME A112.36.2M. INSTALL END-OF-LINE CLEANOUT WITH LONG SWEEP ELBOW; INSTALL 2-WAY CLEANOUT WITH 2-WAY CLEANOUT FITTING.	ZURN ZN1400-HD (OR EQUAL)

DRAINAGE PIPE SLOPE REQUIRED

PIPE SIZE (IN.)	MINIMUM SLOPE PER FOOT (IN.)
2"	1/4"
3"	1/8"
4"	1/8"
6"	1/8"
8"	1/16"
10"	1/16"

WATER HAMMER ARRESTER SCHEDULE

TABLE V, PDI-WH 201 (FOR GROUPED FIXTURES): FIXTURE UNITS	P.D.I. UNIT SIZE	TABLE VI, PDI-WH 201 (FOR LONG RUNS OF PIPING; WATER PRESSURES UP TO 65 PSIG): LENGTH OF PIPE (FT.)	P.D.I. UNIT SIZE – PIPE DIAMETER: 1/2"	3/4"	1"	1-1/4"	1-1/2"	2"
1-3	AA							
1-11	A	25	A	A	B	C	D	E
12-32	B	50	A	B	C	D	E	F
33-60	C	75	B	C	D	AE	F	EF
61-113	D	100	C	D	E	F	CF	FF
114-154	E	125	C	D	F	AF	EF	EFF
155-330	F	150	D	E	F	DF	FF	FFF

PERMIT DOCUMENTS
MAY 2015

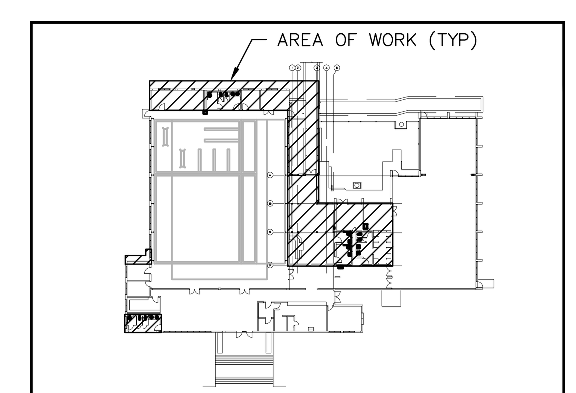

00 KEY PLAN
SCALE: N.T.S

CITY OF TAMPA
CONTRACT ADMINISTRATION DEPARTMENT
PLANNING AND DESIGN DIVISION
306 E. JACKSON STREET 4 NORTH
TAMPA, FLORIDA 33602
p: 813. 274. 8456 – f: 813. 274. 8080
url: www.tampagov.net

James E. Jackson, Jr. AIA, NOMA
City Architect
Edward D. Rice, AIA
Project Architect
Kevin L. Henika, AIA
Project Architect
Thomas A. Hester, Sr., AIA, NOMA
Project Architect
Kinsey C. Tillman
Drafting Technician
Jerry P. Sanders
Drafting Technician
Byron K. Thomas, LEED GA
Drafting Technician

MEP CONSULTANT
HALL ENGINEERING GROUP
14499 N. Dale Mabry Hwy.
Suite 179
Tampa, FL, USA 33618-2042
Tel: 813.374.2121
FL. C.O.A. #: 27620

HALL ENGINEERING GROUP, INC. RETAINS INTELLECTUAL AND PHYSICAL RIGHTS TO THIS DOCUMENT AND ITS CONTENT AND PROHIBITS ITS PUBLISHING, DISCLOSURE OR REPRODUCTION WITHOUT CONSENT.
THIS DOCUMENT IS VALID FOR 12 MONTHS FROM DATE OF ENGINEER'S SIGNATURE AND SEAL.

STRUCTURAL CONSULTANT
BROADWAY ENGINEERING
1335 W. CASS ST.
TAMPA, FLORIDA 33606
(813) 251-9244
FAX (813) 251-9330

CIVIL CONSULTANT
MILLS AND ASSOCIATES, INC.
3242 HENDERSON BOULEVARD
SUITE 300
TAMPA, FLORIDA 33609
(813) 876-5869

LANDSCAPE CONSULTANT

WAYNE C. PAPY CENTER
ADDITION AND RENOVATION
6925 N. FLORIDA AVENUE
TAMPA, FLORIDA 33604

FILE NUMBER

PROJECT NUMBER

ISSUE DATE
MAY, 2015

DRAWN BY
RM

REVISIONS

PROFESSIONAL SEAL

JOHN M. SPIERTO, P.E.; FL. REG. #: 58182

SCALE: AS NOTED

PLUMBING NOTES, LEGEND, SCHEDULES, & DEMOLITION PLANS

SHEET NUMBER
P1.0

---- OF X

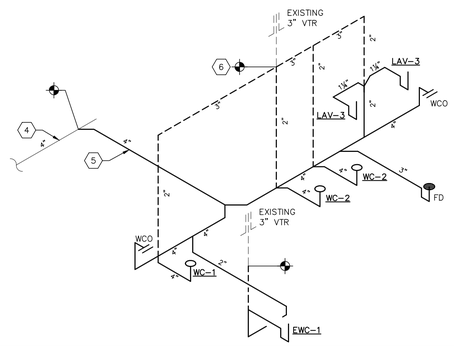

A P1.1 NORTHEAST RESTROOM - SANITARY RISER DIAGRAM NTS

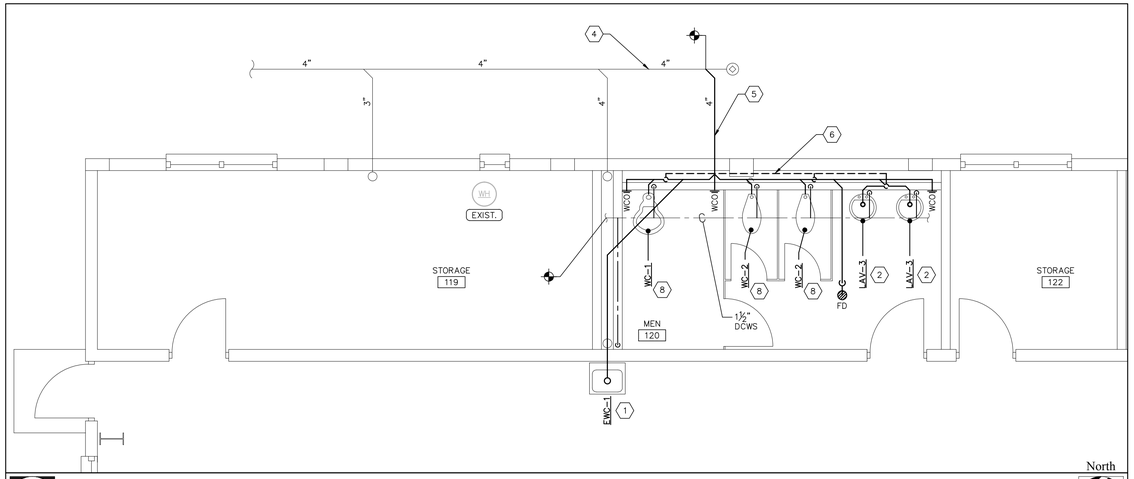

01 P1.1 NORTHEAST RESTROOM RENOVATION PLAN - PLUMBING 1/4" = 1'-0"

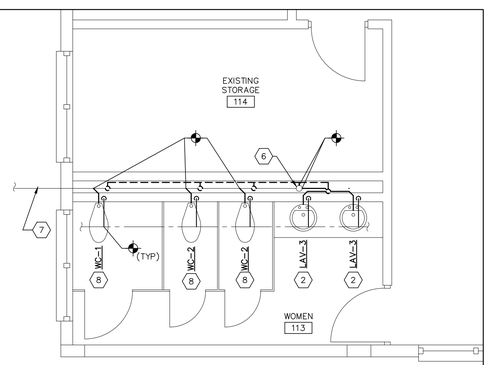

03 P1.1 NORTHWEST RESTROOM RENOVATION PLAN - PLUMBING 1/4" = 1'-0"

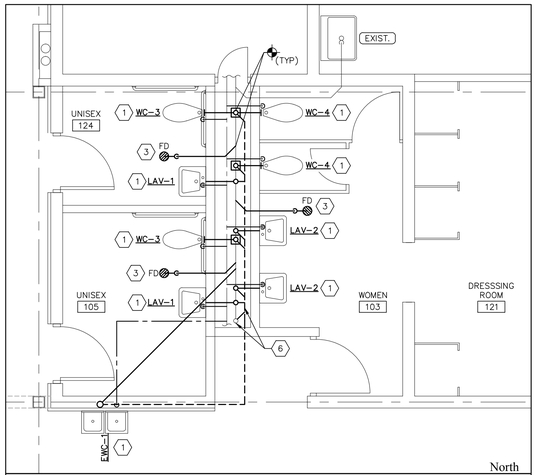

02 P1.1 SOUTH RESTROOM RENOVATION PLAN - PLUMBING 1/4" = 1'-0"

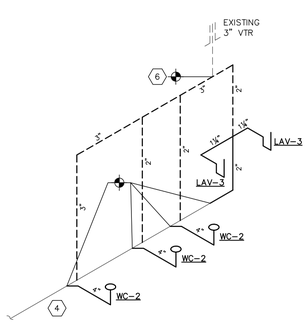

C P1.1 NORTHWEST RESTROOM - SANITARY RISER DIAGRAM NTS

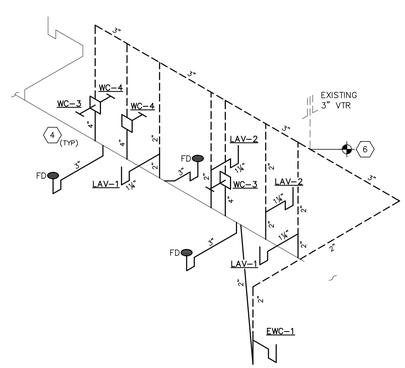

B P1.1 SOUTH RESTROOM - SANITARY RISER DIAGRAM NTS

PROJECT NOTES

GENERAL:

A. EXISTING PIPING AND EQUIPMENT LOCATIONS SHOWN ARE APPROXIMATE AND ARE PROVIDED FOR REFERENCE USE ONLY. FIELD VERIFY AND COORDINATE WITH EXACT LOCATIONS OF EXISTING PIPING, EQUIPMENT, ETC.

B. COORDINATE WITH OWNER FOR BUILDING WATER SHUT OFF. AFTER RESTORING WATER TO BUILDING, ASSURE NO LEAKS ARE EVIDENT.

RENOVATION KEY NOTES

1. PROVIDE NEW WALL MOUNTED PLUMBING FIXTURE. PROVIDE NEW FIXTURE CARRIER IN WALL. EXTEND AND CONNECT TO DOMESTIC WATER SUPPLY PIPING IN CHASE. EXTEND AND CONNECT TO EXISTING WASTE AND VENT PIPING MAINS. CONTRACTOR FIELD VERIFY EXACT LOCATION OF EXISTING PIPING.
2. PROVIDE NEW COUNTERTOP LAVATORY FIXTURE. EXTEND AND CONNECT TO DOMESTIC WATER SUPPLY PIPING IN CHASE. EXTEND AND CONNECT TO EXISTING WASTE AND VENT PIPING MAINS. CONTRACTOR FIELD VERIFY EXACT LOCATION OF EXISTING PIPING.
3. PROVIDE NEW FLOOR DRAIN WITH TRAP PRIMER TAPPING; EXTEND DOMESTIC WATER SUPPLY FROM NEAREST FIXTURE. SAW CUT AND TRENCH FLOOR AS REQUIRED; PATCH FLOOR TO MATCH ADJACENT SURFACES.
4. EXISTING 4" SANITARY WASTE PIPING. CONTRACTOR VERIFY SIZE & NOTIFY ENGINEER IF SIZE IS DIFFERENT FROM DRAWINGS.
5. PROVIDE 4" SANITARY PIPING IN LOCATION OF PREVIOUSLY REMOVED 3" SANITARY LINE.
6. COLLECT VENTS TOGETHER AND ROUTE TO EXISTING VTR.
7. EXISTING SANITARY MAIN PIPE TO REMAIN.
8. PROVIDE NEW FLOOR MOUNTED PLUMBING FIXTURE. SAW CUT AND TRENCH FLOOR AS REQUIRED. EXTEND AND CONNECT TO EXISTING SANITARY, VENT, AND SUPPLY PIPING. PATCH FLOOR AND WALL TO MATCH ADJACENT SURFACES.

PERMIT DOCUMENTS
MAY 2015

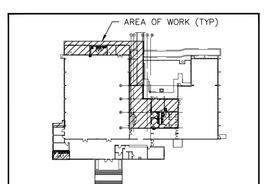

00 KEY PLAN
SCALE:N.T.S

CITY OF TAMPA
CONTRACT ADMINISTRATION DEPARTMENT
PLANNING AND DESIGN DIVISION
306 E. JACKSON STREET 4 NORTH
TAMPA, FLORIDA 33602
p: 813. 274. 8456 – f: 813. 274. 8080
url: www.tampagov.net

James E. Jackson, Jr. AIA, NOMA
City Architect

Edward D. Rice, AIA
Project Architect

Kevin L. Henika, AIA
Project Architect

Thomas A. Hester, Sr., AIA, NOMA
Project Architect

Kinsey C. Tillman
Drafting Technician

Jerry P. Sanders
Drafting Technician

Byron K. Thomas, LEED GA
Drafting Technician

MEP CONSULTANT
HALL ENGINEERING GROUP
14499 N. Dale Mabry Hwy.
Suite 179
Tampa, FL, USA 33618-2042
Tel: 813.374.2121
FL. C.O.A. #: 27620

HALL ENGINEERING GROUP INC. RETAINS OWNERSHIP OF ALL PROPERTY RIGHTS IN THIS DOCUMENT, INCLUDING COPYRIGHT. DISTRIBUTION, REPRODUCTION OR REUSE OF THIS DOCUMENT IS VALID FOR 1 MONTH FROM DATE OF ISSUANCE WITHOUT WRITTEN CONSENT.

STRUCTURAL CONSULTANT
BROADWAY ENGINEERING
1335 W. CASS ST.
TAMPA, FLORIDA 33606
(813) 251-9244
FAX (813) 251-9330

CIVIL CONSULTANT
MILLS AND ASSOCIATES, INC.
3242 HENDERSON BOULEVARD
SUITE 300
TAMPA, FLORIDA 33609
(813) 876-5869

LANDSCAPE CONSULTANT

WAYNE C. PAPY CENTER ADDITION AND RENOVATION
6925 N. FLORIDA AVENUE
TAMPA, FLORIDA 33604

FILE NUMBER

PROJECT NUMBER

ISSUE DATE
MAY, 2015

DRAWN BY
RM

REVISIONS

PROFESSIONAL SEAL

JOHN M. SPIERTO, P.E.; FL. REG. #: 58182

SCALE: AS NOTED

PLUMBING PLANS & RISER DIAGRAMS

SHEET NUMBER
P1.1
---- OF X

Z:\2014 projects\0414b wayne c papy athletic center-lobby exp\Drawings\MEP\sheet set\0414B_P1.1 Plumbing Plans & Riser Diagrams.dwg Jun.2.2015 11:50 am

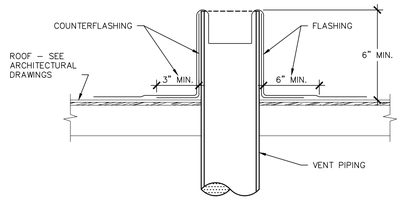

NOTES:

1. PAINT VENT TO MATCH ROOF.
2. FLASHING AND COUNTERFLASHING TO BE PROVIDED BY PLUMBING CONTRACTOR AND INSTALLED BY ROOFING CONTRACTOR.

(E) VENT THRU ROOF DETAIL
SCALE:NTS

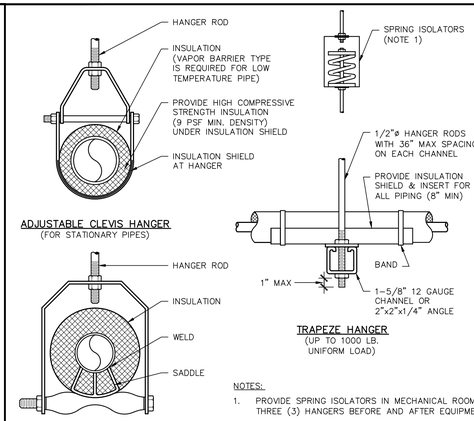

PIPE SUPPORT MAX. SPACING	
NOMINAL PIPE SIZE	PIPE RUN
IN.	LINEAR FT.
≤ 3/4"	7
1	7
1 1/4	7
1 1/2	9
2	10
2 1/2	11
3	12
4	14
5	16
6	17
8	19
10	22
12	23
14	25
16	27
18	28
20	30
24	32

NOTE: FOR TRAPEZE HANGERS USE SPACING OF SMALLEST SIZE ON TRAPEZE.

NOTES:

1. PROVIDE SPRING ISOLATORS IN MECHANICAL ROOMS, AND ON FIRST THREE (3) HANGERS BEFORE AND AFTER EQUIPMENT CONNECTIONS.

(C) TYPICAL PIPE HANGERS
SCALE:NTS

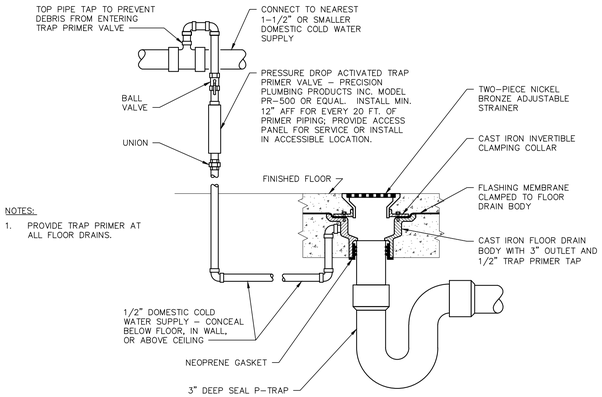

NOTES:

1. PROVIDE TRAP PRIMER AT ALL FLOOR DRAINS.

(A) FLOOR DRAIN
SCALE:NTS

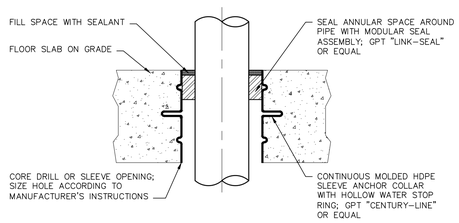

NOTES:

1. SLEEVE NOT REQUIRED FOR CORE-DRILLED HOLES.
2. INSTALL SLEEVE-SEAL SYSTEM ACCORDING TO MANUFACTURER'S INSTRUCTIONS. USE APPROPRIATE LINK-SEAL MODEL FOR THE INSTALLATION CONDITIONS.

(A) PIPE PENETRATION THROUGH SLAB ON GRADE
SCALE:NTS

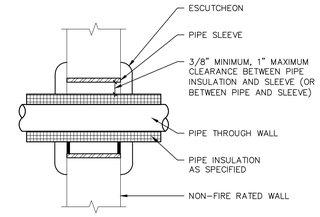

PIPE PENETRATION THROUGH NON-FIRE RATED WALL

(D) PIPE PENETRATION THROUGH NON-FIRE RATED WALL
SCALE:NTS

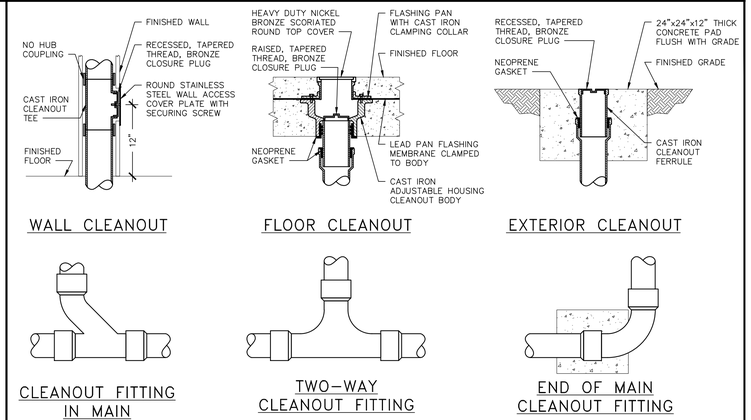

(B) CLEANOUT DETAILS
SCALE:NTS

PERMIT DOCUMENTS
MAY 2015

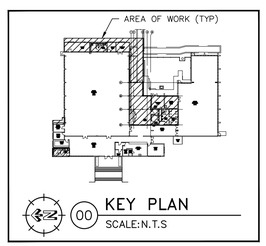

KEY PLAN
SCALE:N.T.S

CITY OF TAMPA
CONTRACT ADMINISTRATION DEPARTMENT
PLANNING AND DESIGN DIVISION
306 E. JACKSON STREET 4 NORTH
TAMPA, FLORIDA 33602
p: 813. 274. 8456 – f: 813. 274. 8080
url: www.tampagov.net

James E. Jackson, Jr. AIA, NOMA
City Architect

Edward D. Rice, AIA
Project Architect

Kevin L. Henika, AIA
Project Architect

Thomas A. Hester, Sr., AIA, NOMA
Project Architect

Kinsey C. Tillman
Drafting Technician

Jerry P. Sanders
Drafting Technician

Byron K. Thomas, LEED GA
Drafting Technician

MEP CONSULTANT
HALL ENGINEERING GROUP
14499 N. Dale Mabry Hwy.
Suite 179
Tampa, FL, USA 33618-2042
Tel: 813.374.2121
FL. C.O.A. #: 27620

STRUCTURAL CONSULTANT
BROADWAY ENGINEERING
1335 W. CASS ST.
TAMPA, FLORIDA 33606
(813) 251-9244
FAX (813) 251-9330

CIVIL CONSULTANT
MILLS AND ASSOCIATES, INC.
3242 HENDERSON BOULEVARD
SUITE 300
TAMPA, FLORIDA 33609
(813) 876-5869

LANDSCAPE CONSULTANT

HALL ENGINEERING GROUP INC. RETAINS OWNERSHIP OF ALL DRAWINGS, SPECIFICATIONS, ESTIMATES, REPORTS, DATA AND DOCUMENTS. THIS DOCUMENT IS VALID FOR 1 MEANING FROM THE DATE OF ISSUANCE. © COPYRIGHT 2014

WAYNE C. PAPY CENTER ADDITION AND RENOVATION
6925 N. FLORIDA AVENUE
TAMPA, FLORIDA 33604

FILE NUMBER

PROJECT NUMBER

ISSUE DATE
MAY, 2015

DRAWN BY
RM

REVISIONS

PROFESSIONAL SEAL

JOHN M. SPIERTO, P.E.; FL. REG. # 58182

SCALE: AS NOTED

PLUMBING DETAILS

SHEET NUMBER
P5.1

---- OF X

Z:\2014 projects\04146 wayne c papy athletic center-lobby exp\Drawings\MEP\sheet set\04146_P5.1 Plumbing Details.dwg Jun.2.2015 11:50 am

DRAWING SPECIFICATIONS

GENERAL:

A. PROVIDE SHALL MEAN FURNISH AND INSTALL.

B. THE COMPLETE ELECTRICAL SYSTEM WHICH SHALL BE PROVIDED BY THE CONTRACTOR SHALL INCLUDE ALL WORK, MATERIALS AND APPARATUSES SPECIFIED HEREINAFTER AND INDICATED ON THE DRAWINGS. ALL WORKMANSHIP SHALL BE OF THE HIGHEST QUALITY AND NO SUBSTANDARD WORK WILL BE ACCEPTED.

C. PROVIDE ALL WORK AND ELECTRICAL SYSTEMS COMPONENTS REQUIRED TO SERVE LOADS AS SPECIFIED HEREINAFTER AND INDICATED ON THE DRAWINGS. THE WORK SHALL INCLUDE COMPLETE TESTING OF ALL ELECTRICAL SYSTEMS AT THE COMPLETION OF THE WORK AND MAKING ANY CHANGES AND ADJUSTMENTS NECESSARY FOR THE PROPER FUNCTIONING OF THE SYSTEMS.

D. MAKE A THOROUGH EXAMINATION OF THE SITE AND THE CONTRACT DOCUMENTS PRIOR TO EXECUTING THE CONTRACT. NO CLAIM FOR ADDITIONAL COMPENSATION WILL BE RECOGNIZED FOR DIFFICULTIES ENCOUNTERED WHICH AN EXAMINATION OF SITE CONDITIONS AND CONTRACT DOCUMENTS WOULD HAVE REVEALED.

E. THE PLANS ARE GENERALLY DIAGRAMMATIC. COORDINATE ALL WORK WITH OTHER TRADES AS REQUIRED TO AVOID INTERFERENCES BETWEEN TRADES (i.e. BEAMS, CONDUITS, EQUIPMENT, DUCTWORK, ETC).

F. REMOVE ALL EXISTING LIGHTING FIXTURES, EQUIPMENT, DEVICES, CONDUCTORS, RACEWAYS, ETC. MADE UNNECESSARY BY THE NEW INSTALLATION. PRIOR TO REMOVAL FROM SITE, COORDINATE WITH OWNER TO DETERMINE IF OWNER WISHES TO RETAIN ANY REMOVED EQUIPMENT.

WORK PERFORMANCE:

A. JOB SITE SAFETY AND WORKER SAFETY IS THE RESPONSIBILITY OF THE CONTRACTOR.

B. ARRANGE, PHASE AND PERFORM ALL WORK DURING TIME PERIODS SCHEDULED WITH AND ACCEPTABLE TO THE OWNER BEFORE PROCEEDING. NO ADDITIONAL COMPENSATION WILL BE AUTHORIZED FOR WORK NECESSITATED BY ILL–TIMED, DEFECTIVE, OR NON–CONFORMING WORK.

C. THE CONTRACTOR SHALL ENSURE THAT ALL SYSTEMS OPERATE AS DESIGNED AND/OR REQUIRED AND SHALL REVIEW THEIR OPERATION WITH THE OWNER UPON COMPLETION OF CONSTRUCTION AND TESTING. COMPILE COMPLETE AND UPDATED AS–BUILT DRAWINGS/DOCUMENTS AND ISSUE ONE (1) SET TO THE OWNER.

D. ELECTRICAL WORK SHALL BE ACCOMPLISHED WITH ALL AFFECTED CIRCUITS OR EQUIPMENT DE–ENERGIZED. WHEN AN ELECTRICAL OUTAGE CANNOT BE ACCOMPLISHED IN THIS MANNER FOR THE REQUIRED WORK, THE FOLLOWING REQUIREMENTS ARE MANDATORY:

1. ELECTRICIANS MUST USE AND WEAR FULL PROTECTIVE EQUIPMENT (PPE) (i.e. CERTIFIED AND TESTED INSULATING MATERIAL TO COVER EXPOSED ENERGIZED ELECTRICAL COMPONENTS, CERTIFIED AND TESTED INSULATED TOOLS, ETC.) WHILE WORKING ON ENERGIZED SYSTEMS IN ACCORDANCE WITH NFPA 70E. THE LEVEL OF PPE SHALL BE DETERMINED BY A COMPUTER GENERATED ARC FLASH CALCULATION PROVIDED AND PAID FOR BY THE CONTRACTOR. THE ARC FLASH DATA SHALL BE PRESENTED WITH THE SUBMITTAL BELOW.
2. WORK ON ENERGIZED CIRCUITS OR EQUIPMENT CANNOT BEGIN UNTIL PRIOR WRITTEN APPROVAL IS OBTAINED FROM THE OWNER.

E. NEW WORK SHALL BE INSTALLED AND CONNECTED TO EXISTING WORK NEATLY AND CAREFULLY. PROVIDE PROTECTIVE MATS, COVERS, ETC. AS REQUIRED FOR ALL EXISTING WORK SUSCEPTIBLE TO DAMAGE. VERIFY SPECIFIC LOCATIONS AND REQUIREMENTS WITH THE OWNER. DISTURBED OR DAMAGED WORK AS A RESULT OF ELECTRICAL WORK SHALL BE REPLACED OR REPAIRED TO ITS PRIOR CONDITIONS.

F. ENSURE THAT ELECTRICAL SERVICE REMAINS UNINTERRUPTED FOR OTHER BUILDINGS AND FACILITIES AT ALL TIMES. PERFORM ALL TEMPORARY WORK NECESSARY TO MAINTAIN CONTINUITY OF ELECTRICAL SERVICE WHEN CONNECTION IS MADE TO EXISTING SYSTEMS. EXISTING SERVICE SHALL NOT BE INTERRUPTED WITHOUT PRIOR CONSENT OF THE OWNER AND MAY BE INTERRUPTED ONLY AT AND FOR THE SPECIFIED TIME DESIGNATED BY THE OWNER. THE CONTRACTOR SHALL BE GUIDED BY THE OWNER AT ALL TIMES IN MATTERS AFFECTING THE EXISTING FACILITIES.

G. ELECTRICAL EQUIPMENT SHALL NOT BE STORED OUTDOORS. EQUIPMENT SHALL BE STORED IN AN OWNER/ENGINEER APPROVED MEDIUM AND LOCATION.

CODES & STANDARDS:

A. PERFORM WORK IN COMPLIANCE WITH THE LATEST ADOPTED EDITION OF ALL APPLICABLE, FEDERAL, STATE AND LOCAL CODES, REGULATIONS AND STANDARDS, TO INCLUDE THOSE LISTED BELOW, ADOPTED BY THE AUTHORITY HAVING JURISDICTION. WHERE DIFFERENCES MAY OCCUR THE MORE STRINGENT REQUIREMENTS SHALL GOVERN. IN CASE OF CONFLICT PROVIDE WRITTEN NOTIFICATION AND OBTAIN A DECISION FROM THE ARCHITECT.

1. NFPA 70: NATIONAL ELECTRICAL CODE
2. NFPA 70E: STANDARD FOR ELECTRICAL SAFETY IN THE WORKPLACE
3. NFPA 72: NATIONAL FIRE ALARM CODE
4. NFPA 90A: STANDARD FOR THE INSTALLATION OF AIR CONDITIONING AND VENTILATING SYSTEMS
5. NFPA 101: LIFE SAFETY CODE
6. NFPA 241: STANDARD FOR SAFEGUARDING CONSTRUCTION, ALTERATION AND DEMOLITION OPERATIONS
7. FBC: FLORIDA BUILDING CODE
8. OSHA PART 1910: OCCUPATIONAL SAFETY AND HEALTH STANDARDS
9. OSHA PART 1926: SAFETY AND HEALTH REGULATIONS FOR CONSTRUCTION

WARRANTY:

A. CONTRACTOR SHALL WARRANTY ALL WORK FOR A PERIOD OF ONE (1) YEAR FROM DATE OF SUBSTANTIAL COMPLETION. CONTRACTOR SHALL RECTIFY ANY DEFECTS DUE TO FAULTY MATERIALS OR WORKMANSHIP AND PAY FOR ANY DAMAGE TO OTHER WORK RESULTING THEREFROM WITHIN SAID PERIOD. THE OWNER WILL GIVE NOTICE OF DEFECTS WITH REASONABLE PROMPTNESS.

B. PROVIDE COMPLETE WARRANTY INFORMATION FOR EACH ITEM TO INCLUDE PRODUCT OR EQUIPMENT; DATE OR BEGINNING OF WARRANTY OR BOND; DURATION OF WARRANTY OR BOND; AND NAMES, ADDRESSES, AND TELEPHONE NUMBERS AND PROCEDURES FOR FILING A CLAIM AND OBTAINING WARRANTY SERVICES.

SUBMITTALS:

A. SUBMIT FIVE (5) COMPLETE BOUND HARDCOPY SETS OR ONE (1) ELECTRONIC COPY. THE ENGINEER WILL RETURN MIN ONE (1) COPY OF SUBMITTAL AND/OR SUBMITTAL REVIEW COMMENTS NO LATER THAN 21 CALENDAR DAYS OF RECEIPT.

B. APPROVAL SHALL BE OBTAINED FOR ALL EQUIPMENT AND MATERIAL BEFORE DELIVERY TO THE JOB SITE. DELIVERY, STORAGE OR INSTALLATION OF EQUIPMENT OR MATERIAL WHICH HAS NOT HAD PRIOR APPROVAL, WILL NOT BE PERMITTED AT THE JOB SITE.

C. ALL SUBMITTALS SHALL INCLUDE ADEQUATE DESCRIPTIVE LITERATURE, CATALOG CUTS, SHOP DRAWINGS AND OTHER DATA NECESSARY FOR THE ARCHITECT/ENGINEER TO ASCERTAIN THAT THE PROPOSED EQUIPMENT AND MATERIALS COMPLY WITH SPECIFICATION REQUIREMENTS. CATALOG CUTS SUBMITTED FOR APPROVAL SHALL BE LEGIBLE AND CLEARLY IDENTIFY EQUIPMENT BEING SUBMITTED.

D. SUBMITTALS FOR INDIVIDUAL SYSTEMS AND EQUIPMENT ASSEMBLIES WHICH CONSIST OF MORE THAN ONE ITEM OR COMPONENT SHALL BE MADE FOR THE SYSTEM OR ASSEMBLY AS A WHOLE. PARTIAL SUBMITTALS WILL NOT BE CONSIDERED FOR APPROVAL

E. SUBMITTAL OF SHOP DRAWINGS, PRODUCT DATA, AND SAMPLES WILL BE ACCEPTED ONLY WHEN SUBMITTED BY THE CONTRACTOR. DATA SUBMITTED FROM SUBCONTRACTORS AND MATERIAL SUPPLIERS DIRECTLY TO THE ARCHITECT/ENGINEER WILL NOT BE PROCESSED.

F. SUBMITTALS SHALL BE MARKED TO SHOW SPECIFICATION REFERENCE INCLUDING THE SECTION AND PARAGRAPH NUMBERS. SUBMIT EACH SECTION SEPARATELY AND INCLUDE THE FOLLOWING:

1. INFORMATION THAT CONFIRMS COMPLIANCE WITH CONTRACT REQUIREMENTS. INCLUDE THE MANUFACTURER'S NAME, MODEL OR CATALOG NUMBERS, CATALOG INFORMATION, TECHNICAL DATA SHEETS, SHOP DRAWINGS, PICTURES, NAMEPLATE DATA AND TEST REPORTS AS REQUIRED.
2. PARTS LIST WHICH SHALL INCLUDE THOSE REPLACEMENT PARTS RECOMMENDED BY THE EQUIPMENT MANUFACTURER, QUANTITY OF PARTS, CURRENT PRICE AND AVAILABILITY OF EACH PART.

G. MANUALS: SUBMIT IN ACCORDANCE WITH "A" ABOVE FOR REVIEW AND COMMENT.

1. MAINTENANCE AND OPERATION MANUALS: SUBMIT AS REQUIRED FOR SYSTEMS AND EQUIPMENT SPECIFIED IN THE TECHNICAL SECTIONS. FURNISH THREE (3) COPIES, BOUND IN HARDBACK BINDERS, (MANUFACTURER'S STANDARD BINDERS) OR AN APPROVED EQUAL. FURNISH ONE COMPLETE MANUAL AS SPECIFIED IN THE TECHNICAL SECTION BUT IN NO CASE LATER THAN PRIOR TO PERFORMANCE OF SYSTEMS OR EQUIPMENT TEST, AND FURNISH THE REMAINING MANUALS PRIOR TO CONTRACT COMPLETION.
2. INSCRIBE THE FOLLOWING IDENTIFICATION ON THE COVER: THE WORDS "MAINTENANCE AND OPERATION MANUAL," THE NAME AND LOCATION OF THE SYSTEM, EQUIPMENT, BUILDING, NAME OF CONTRACTOR, AND CONTRACT NUMBER. INCLUDE IN THE MANUAL THE NAMES, ADDRESSES, AND TELEPHONE NUMBERS OF EACH SUBCONTRACTOR INSTALLING THE SYSTEM OR EQUIPMENT AND THE LOCAL REPRESENTATIVES FOR THE SYSTEM OR EQUIPMENT.

MATERIALS AND METHODS:

A. MATERIALS AND APPARATUSES SHALL COMPLY WITH ALL APPLICABLE TESTS, RATINGS, SPECIFICATIONS, AND REQUIREMENTS OF THE IEEE, NEMA, NFPA AND UL, SHALL BEAR THE UL LABEL OF APPROVAL AND BE LISTED FOR THE PROPOSED APPLICATION.

B. FINISHED PRODUCTS SHALL BE FACTORY PRIMED AND FINISH COATED WITH THE MANUFACTURER'S PRIME COAT AND STANDARD FINISH UNLESS SPECIFIED OTHERWISE BY THE ARCHITECT.

C. UNLESS OTHERWISE SPECIFIED, UNFINISHED PRODUCTS SHALL BE GALVANIZED, COATED OR PLATED TO RESIST CORROSION.

D. INSTALLATIONS SHALL BE IN ACCORDANCE WITH ALL APPLICABLE CODES, AS RECOMMENDED BY THE MANUFACTURER AND AS CLOSE AS PRACTICABLE TO LOCATIONS INDICATED ON DRAWINGS.

E. INSTALLATIONS SHALL FACILITATE MAINTENANCE AND REPAIR OR REPLACEMENT OF EQUIPMENT COMPONENTS. ACCESS, WORKING SPACES AND CLEARANCES SHALL NOT BE LESS THAN SPECIFIED BY THE NEC FOR ALL VOLTAGES SPECIFIED.

IDENTIFICATION:

A. INSTALL LABEL TAGS ON ALL WIRE AND CABLE IN JUNCTION BOXES, WIREWAYS AND WIRING GUTTERS OF PANELS. TAGS SHALL IDENTIFY WIRE OR CABLE CIRCUIT NUMBER AND/OR EQUIPMENT SERVED AS INDICATED ON DRAWINGS.

B. JUNCTION BOXES SHALL BE LABELED IN A PERMANENT MANNER REFLECTING PANELBOARD/CIRCUIT NUMBER OF BRANCH CIRCUIT WIRING CONTAINED WITHIN.

C. PANELBOARD DIRECTORIES SHALL BE TYPEWRITTEN, REFLECTING RECORD CONDITIONS TO INCLUDE CIRCUIT NUMBER, TYPE AND LOCATION OF LOAD.

D. INSTALL PLASTIC PLACARDS ON EQUIPMENT REFLECTING, EQUIPMENT NAME, NUMBER AND RATING.

RACEWAYS:

A. RACEWAYS:

1. INTERIOR EXPOSED, CONCEALED IN WALLS OR ABOVE CEILINGS: ELECTRICAL METALLIC TUBING (EMT)
2. INTERIOR CONNECTIONS TO MOTORS, TRANSFORMERS AND VIBRATING EQUIPMENT: FLEXIBLE METAL CONDUIT (FMC)
3. EXTERIOR EXPOSED: GALVANIZED STEEL RIGID METAL CONDUIT (RMC). WHERE PROTECTED, SCHEDULE 40 POLYVINYL CHLORIDE CONDUIT (PVC).
4. EXTERIOR CONNECTIONS TO MOTORS, TRANSFORMERS AND VIBRATING EQUIPMENT: LIQUIDTIGHT FLEXIBLE METAL CONDUIT (LFMC)
5. UNDERGROUND: SCHEDULE 40 PVC

B. ALL CONDUIT SHALL BE PROPERLY ALIGNED, GROUPED AND SUPPORTED. EXPOSED CONDUIT SHALL BE INSTALLED AT RIGHT ANGLES TO OR PARALLEL TO THE PRINCIPAL STRUCTURAL MEMBERS. PROVIDE SUPPORT A MINIMUM OF 18" FROM BENDS AND OUTLET BOXES AND ON INTERVALS NOT TO EXCEED 8'–0". CONDUIT IS NOT TO SPAN ANY SPACE UNSUPPORTED. ALL CONDUIT SHALL BE SUPPORTED FROM STRUCTURE AND NOT FROM CEILING SUPPORT SYSTEM.

C. PROVIDE NYLON PULL CORD AND LEAVE IN PLACE IN EACH EMPTY CONDUIT.

D. THIN WALL CONDUIT SHALL BE UL APPROVED GALVANIZED ELECTRICAL METALLIC TUBING. COUPLINGS AND CONNECTORS FOR CONDUIT SHALL BE STEEL HEX–NUT, ZINC OR CADMIUM PLATED SET SCREW TYPE FITTINGS.

E. FLEXIBLE METALLIC CONDUIT IN DRY LOCATIONS SHALL BE UL APPROVED, ZINC COATED, SINGLE STRIP TYPE. FITTINGS SHALL BE AS MANUFACTURED BY THOMAS AND BETTS "TITE–BITE", STRAIGHT OR ANGLE CONNECTORS OR APPROVED EQUAL.

BOXES:

A. ALL BOXES SHALL BE RIGIDLY MOUNTED AND SHALL BE EQUIPPED WITH SUITABLE SCREW FASTENED COVERS. OPEN KNOCK–OUTS OR HOLES IN BOXES SHALL BE PLUGGED WITH A SUITABLE BLANKING DEVICE.

B. EXTERIOR BRANCH BOXES SHALL BE WEATHERPROOF CAST "FS" BOXES.

C. HANDHOLES AND COVERS SHALL BE HUBBELL QUAZITE OR EQUAL, UL LISTED TIER 15 RATED, LOCKABLE COVERS, OPTIONS AS NEEDED, STAINLESS STEEL BOLTS.

CONDUCTORS:

A. UNLESS OTHERWISE INDICATED, ALL BRANCH CIRCUIT CONDUCTORS SHALL BE NO. 12 AWG. BRANCH CIRCUITS RUN OVER 75 FEET IN LENGTH, MEASURING ONE WAY FROM THE FIRST OUTLET OF THE CIRCUIT TO THE PANEL, SHALL BE NO. 10 AWG FOR THE ENTIRE CIRCUIT.

B. CONDUCTORS SHALL BE COPPER WITH THHN/THWN–2 90°C INSULATION. THE FOLLOWING SYSTEMS OF COLOR CODING SHALL BE STRICTLY ADHERED TO AND SHALL BE CONSISTENTLY FOLLOWED THROUGHOUT:

1. GROUND WIRES: GREEN
2. GROUNDED NEUTRAL WIRES: WHITE
3. 208/120 VOLT, UNGROUNDED PHASE WIRES: BLACK, RED AND BLUE

NOTE: WHERE EXISTING BASE BUILDING COLOR CODING DIFFERS FROM COLOR CODING ASSIGNED HERE–IN, USE EXISTING COLOR CODING AS REQUIRED TO MAINTAIN CONSISTENCY.

C. ALL WIRING IN CEILING SPACE OR IN AIR HANDLING PLENUMS NOT IN CONDUIT SHALL BE UL LISTED AS SUITABLE FOR PLENUM USE.

D. ALL CONDUITS AND WIRING PENETRATING RATED FLOORS AND WALLS SHALL BE SEALED TO MAINTAIN FIRE RATING AND INTEGRITY OF SEPARATION.

E. UNDERGROUND SPLICES, JOINTS, TERMINATIONS, ETC. SHALL BE WATERPROOF.

F. FOR NEW CIRCUITS, MULTIPLE CIRCUITS IN SAME CONDUIT SHALL NOT SHARE NEUTRAL CONDUCTORS. FOR EXISTING CIRCUITS, WHERE REQUIRED BY NEC, PROVIDE AND INSTALL HANDLE TIES ON EXISTING CIRCUIT BREAKERS.

G. REUSE EXISTING JUNCTION BOXES, CONDUITS AND WIRING TO FEED RECEPTACLES AND LIGHTING FIXTURES WHERE APPLICABLE. REMOVE AND DISPOSE OF ALL UNUSED CONDUIT AND WIRING BACK TO LAST ACTIVE DEVICE OR PANEL.

GROUNDING:

A. THE ELECTRICAL SYSTEMS SHALL BE COMPLETELY AND EFFECTIVELY GROUNDED AS REQUIRED BY THE NEC AND AS SPECIFIED HEREINAFTER.

B. ALL METALLIC RACEWAYS SHALL BE MECHANICALLY AND ELECTRICALLY SECURE AT ALL JOINTS AND AT ALL BOXES, CABINETS, FITTINGS, AND EQUIPMENT. METALLIC RACEWAYS SHALL BE CONNECTED TO A DIRECT GROUND AT THE POINT OF ELECTRICAL SERVICE ENTRANCE AND SHALL BE ELECTRICALLY CONTINUOUS THROUGHOUT THE ENTIRE SYSTEM.

C. ALL GROUND CONDUCTORS SHALL BE INSULATED COPPER UON.

D. ALL RACEWAYS WITH NO. 10 OR 12 AWG PHASE CONDUCTORS FOR RECEPTACLES, LIGHTING FIXTURES AND SIMILAR CIRCUITS (NEW BRANCH CIRCUITS) SHALL BE PROVIDED WITH A PARITY SIZED GREEN EQUIPMENT GROUND CONDUCTOR. GROUND CONDUCTOR SHALL BE INSTALLED IN ENTIRE RACEWAY SYSTEM INCLUDING WALL SWITCHES AND FLEXIBLE CONDUIT TO LIGHT FIXTURES. EQUIPMENT GROUND CONDUCTOR SIZES FOR CIRCUITS WITH PHASE CONDUCTORS LARGER THAN NO. 12 AWG ARE INDICATED ON DRAWINGS. GROUND CONDUCTORS SHALL BE CONNECTED TO GROUND BUS IN PANELBOARDS.

E. TERMINATE FEEDER AND BRANCH CIRCUIT INSULATED EQUIPMENT GROUNDING CONDUCTORS WITH GROUNDING LUG, BUS, OR BUSHING. CONDUCTORS LOOPED UNDER SCREW OR BOLT HEADS WILL NOT BE PERMITTED.

F. INSTALL CLAMP–ON CONNECTORS ON CLEAN METAL CONTACT SURFACES TO ENSURE ELECTRICAL CONDUCTIVITY AND CIRCUIT INTEGRITY.

SWITCHES & RECEPTACLES:

A. ALL RECEPTACLES SHALL BE THE GROUNDING TYPE WITH GROUND CONNECTION MADE THROUGH AN EXTRA POLE WHICH SHALL BE PERMANENTLY CONNECTED TO GROUND CONDUCTOR.

B. ALL GFCI RECEPTACLES LOCATED IN DAMP, WET OR EXTERIOR LOCATIONS SHALL BE WEATHER–RESISTANT TYPE TO COMPLY WITH NEC 406.8.

C. RECEPTACLES FOR 20 AMPERE, 120 VOLT APPLICATION SHALL BE SPECIFICATION GRADE THREE–WIRE, TWO POLE, RATED 20 AMPERES AT 125 VOLTS, PASS & SEYMOUR OR APPROVED EQUAL.

D. LIGHT SWITCHES SHALL BE SPECIFICATION GRADE, 120/277 VOLTS, PASS & SEYMOUR OR APPROVED EQUAL.

E. PROVIDE WALL PLATES FOR SINGLE AND COMBINATION DEVICES OF TYPES, SIZES, AND WITH GANGING AND CUTOUTS AS INDICATED. SELECT PLATES WHICH MATE AND MATCH WIRING DEVICES TO WHICH ATTACHED. CONSTRUCT WITH METAL SCREWS FOR SECURING PLATES TO DEVICES; SCREW HEADS COLOR TO MATCH FINISH OF PLATES, WALL PLATES COLOR TO MATCH DEVICES, COLOR BY ARCHITECT.

F. WHERE EXISTING DEVICES ARE SHOWN TO BE REMOVED, CONTRACTOR SHALL MAINTAIN SERVICE TO REMAINING DEVICES.

LIGHTING FIXTURES:

A. THE CONTRACTOR SHALL FURNISH AND INSTALL COMPLETE IN ALL RESPECTS ALL LIGHTING FIXTURES INDICATED ON THE PLANS.

B. FIXTURES SHALL BE SUPPORTED INDEPENDENTLY FROM CEILING AND SHALL BE PROPERLY AND CAREFULLY ALIGNED. THE CONTRACTOR SHALL FURNISH AND INSTALL ALL NECESSARY HARDWARE, ETC, FOR SUPPORT OF FIXTURES AS REQUIRED.

C. RECESSED FIXTURES SHALL BE CONNECTED WITH A MAXIMUM 6 FOOT FLEXIBLE WHIP.

D. BALLASTS – FLUORESCENT:

1. BALLASTS FOR FLUORESCENT LAMPS SHALL BE HIGH FREQUENCY ELECTRONIC TYPE FOR USE WITH OCTIC TYPE (265 MA) LAMPS. THE TOTAL HARMONIC DISTORTION (%THD) SHALL BE LESS THAN 10%. THE POWER FACTOR SHALL BE .95 OR HIGHER.
2. BALLASTS SHALL BE INDIVIDUALLY FUSED ON THE LINE SIDE OF THE BALLAST.
3. BALLASTS SHALL BEAR THE ETL/CBM AND UL LABELS.
4. NON–DIMMING ELECTRONIC BALLASTS FOR FLUORESCENT LAMPS SHALL BE GENERAL ELECTRIC (MAGNETEK), OSRAM SYLVANIA QUICKTRONIC, OR ADVANCE.
5. DIMMING BALLASTS SHALL BE LUTRON; ELECTRICAL ASSEMBLY OF CONTROL UNIT AND DIMMING BALLAST SHALL FURNISH SMOOTH DIMMING OF FLUORESCENT LAMPS.
6. INSTANT START BALLASTS SHALL BE USED WITH NON–OCCUPANCY SENSOR CONTROLLED LUMINARIES.
7. PROGRAMMED RAPID START BALLASTS SHALL BE USED FOR OCCUPANCY SENSOR CONTROLLED LUMINARIES.

E. BALLASTS – HIGH INTENSITY DISCHARGE (HID):

1. BALLASTS FOR HID LAMPS SHALL BE THE CONSTANT WATTAGE, HIGH POWER FACTOR TYPE OR THE REACTOR HIGH POWER FACTOR TYPE. CAPACITORS SHALL NOT CONTAIN PCB (POLYCHLORINATED BIPHENYL) FLUIDS OR OTHER FLUIDS RECOGNIZED AS HAZARDOUS WHEN DISCHARGED INTO THE ENVIRONMENT.
2. BALLASTS SHALL COMPLY WITH NEMA 82.4 AND UL 1029.
3. BALLASTS SHALL HAVE INDIVIDUAL OVERCURRENT PROTECTION SIZED IN ACCORDANCE WITH THE MANUFACTURER'S RECOMMENDATIONS.
4. BALLASTS SHALL HAVE RE–STRIKE PROTECTION.

F. LAMPS:

1. LAMPS APPROVED MANUFACTURERS SHALL BE: SYLVANIA. PHILIPS OR GENERAL ELECTRIC, NO SUBSTITUTIONS PERMITTED.
2. FLUORESCENT LAMPS SHALL HAVE A MINIMUM 85 CRI AND 4100K CCT UON, OTHERWISE, ALL LAMPS SHALL BE 'TCLP' COMPLIANT.

G. FIXTURES SHALL BE CLEAN AND LENSES SHALL BE CLEAR OF FINGERPRINTS.

H. REPLACE NON–OPERATING LAMPS WITH NEW AND REPLACE MISMATCHED COLOR LAMPS WITH SAME COLOR LAMPS (MATCH BUILDING STANDARD) PRIOR TO FINAL OBSERVATION BY ENGINEER.

EQUIPMENT:

A. APPROVED MANUFACTURERS SHALL BE: SQUARE–D, CUTLER–HAMMER, GENERAL ELECTRIC AND SIEMENS.

B. EQUIPMENT BUSSING SHALL BE COPPER.

C. OUTDOOR EQUIPMENT SHALL BE NEMA 3R OR NEMA 4X AS REQUIRED.

D. PANELBOARDS:

1. PANELBOARDS SHALL BE SQUARE–D: NQ, NF, I–LINE OR APPROVED EQUAL, SERIES RATED PANELBOARDS WILL NOT BE PERMITTED.
2. FULL SIZE, COPPER NEUTRAL BUS (UON), MOUNTED ON INSULATED SUPPORTS.
3. COPPER GROUND BUS WITH SUFFICIENT TERMINALS FOR ALL GROUNDING CONDUCTORS. BUSES BRACED FOR THE AVAILABLE SHORT CIRCUIT CURRENT, BUT NOT LESS THAN 10,000 AMPERES SYMMETRICAL FOR 208/120 VOLT PANELBOARDS AND 14,000 AMPERES SYMMETRICAL FOR 480/277 VOLT PANELBOARDS.
4. MAIN CIRCUIT BREAKER MOUNTING SHALL BE VERTICAL, AHEAD OF BUSING; HORIZONTAL MOUNTING WILL NOT BE ACCEPTED.

E. CIRCUIT BREAKERS SHALL BE BOLT–ON TYPE.

F. PROVIDE DISCONNECTING MEANS OR SAFETY SWITCH NEAR AND WITHIN SIGHT OF EACH MOTOR.

G. SAFETY SWITCHES SHALL BE HEAVY DUTY TYPE UON.

H. FUSES SHALL BE CLASS RK1 UON.

I. COMBINATION STARTER/DISCONNECT:

1. CIRCUIT BREAKERS AND SAFETY SWITCHES WITHIN THE MOTOR CONTROLLER ENCLOSURES SHALL HAVE EXTERNAL OPERATING HANDLES WITH LOCK–OPEN PADLOCKING PROVISIONS AND SHALL INDICATE THE ON AND OFF POSITIONS. MECHANICALLY INTERLOCK ENCLOSURE DOOR TO PREVENT OPENING UNLESS THE BREAKER OR SWITCH IS OPEN.
2. MOTOR CONTROL CIRCUITS SHALL OPERATE AT NOT MORE THAN 120 VOLTS AND SHALL BE GROUNDED.
3. INCORPORATE A SEPARATE, HEAVY DUTY, CONTROL TRANSFORMER WITHIN EACH MOTOR CONTROLLER ENCLOSURE WITH OVER CURRENT PROTECTION FOR BOTH PRIMARY AND SECONDARY WINDINGS.
4. OVERLOAD RELAY SOLID STATE, THERMAL OR INDUCTION TYPE.
5. MANUAL RESET ON THE DOOR OF MOTOR CONTROLLER ENCLOSURE AND HAND–OFF–AUTOMATIC (H–O–A) SWITCH, AUXILIARY CONTACTS, PILOT LIGHTS, PUSHBUTTONS AND OTHER DEVICES AND ACCESSORIES AS REQUIRED.
6. INCORPORATE INTO EACH CONTROL CIRCUIT A 120 VOLT, SOLID STATE TIME DELAY RELAY (ON DELAY), MINIMUM ADJUSTABLE RANGE FROM 0.3 TO 10 MINUTES, WITH TRANSIENT PROTECTION.

FIRE ALARM:

A. SYSTEM:

1. PROVIDE IN ALL RESPECTS A COMPLETE AND OPERATIONAL SYSTEM AS INDICATED AND REQUIRED BY NFPA AND THE AHJ. UPON PROJECT COMPLETION THE FIRE ALARM SYSTEM SHALL BE TESTED IN THE PRESENCE OF THE OWNER AND THE AHJ.
2. FIRE ALARM VENDOR SHALL PROVIDE SIGNED AND SEALED SHOP DRAWINGS INCLUDING BATTERY BACKUP CALCULATIONS.
3. REFER TO VENDOR SHOP DRAWINGS FOR EXACT SYSTEM REQUIREMENTS, DEVICES AND APPLIANCE LOCATIONS.
4. COORDINATE WITH THE FIRE PROTECTION SYSTEM INSTALLER AND MAKE FINAL CONNECTIONS TO FIRE PROTECTION SYSTEM AS REQUIRED.
5. COORDINATE WITH ELEVATOR INSTALLER SO THAT DEVICES RELATED TO THE ELEVATOR INSTALLATION MEET ELEVATOR CODE REQUIREMENTS.
6. VERIFY/ADJUST AUDIBLE APPLIANCES, AUDIBILITY LEVELS IN ACCORDANCE WITH NFPA 72.

B. FIRE ALARM BOXES AND CONDUIT SHALL BE SPOT PAINTED RED.

C. CEILING MOUNTED AND WALL MOUNTED NOTIFICATION APPLIANCES SHALL BE WHITE WITH RED LETTERING UNLESS OTHERWISE SPECIFIED BY THE ARCHITECT.

ELECTRICAL LEGEND

SYMBOL	DESCRIPTION	MOUNTING/REMARKS
	1 X 4 LIGHTING FIXTURE	CEILING RECESSED
	ENCLOSED LIGHTING FIXTURE	CEILING SURFACE OR SUSPENDED
	STRIP LIGHTING FIXTURE	CEILING SURFACE OR SUSPENDED
	DOWN LIGHTING FIXTURE	CEILING RECESSED
	SURFACE LIGHTING FIXTURE	CEILING SURFACE OR SUSPENDED
	EXIT SIGN FIXTURE: FACES AND DIRECTIONAL CHEVRONS AS INDICATED	WALL SURFACE

FIXTURE STATE:

NORMAL POWER: SWITCHED

EMERGENCY POWER: UNSWITCHED

SYMBOL	DESCRIPTION	MOUNTING/REMARKS
?	OCCUPANCY SENSOR: DENOTED BY SUBSCRIPT	CEILING FLUSH
?	OCCUPANCY SENSOR: DENOTED BY SUBSCRIPT	TOP 48" AFF

SWITCH/SENSOR SUBSCRIPTS:

a,b	RESPECTIVE FIXTURE/LAMP CONTROL	DM	DIMMER	MR	MOTOR/HP RATED
2	DOUBLE POLE	DT	DUAL TECHNOLOGY	OR	OVERRIDE
3	THREE WAY	IR	PASSIVE INFRARED	PL	PILOT LIGHT
4	FOUR WAY	K	KEY OPERATED	TD	TIME DELAY (10 MIN)
		MC	MOMENTARY CONTACT	UT	ULTRASONIC

SYMBOL	DESCRIPTION	MOUNTING/REMARKS
	DUPLEX RECEPTACLE: 20 A, 125 VAC	TOP 20" AFF
	QUAD RECEPTACLE: 20 A, 125 VAC	TOP 20" AFF
	VOICE/DATA OUTLET	TOP 20" AFF
	FIRE ALARM MANUAL PULL STATION	TOP 48" AFF
?	FIRE ALARM STROBE: SUBSCRIPT = CANDELA	LENS 80" MIN – 96" MAX AFF, 6" MAX BELOW CEILING
?	FIRE ALARM HORN/STROBE: SUBSCRIPT = CANDELA	LENS 80" MIN – 96" MAX AFF, 6" MAX BELOW CEILING
	DEVICE AS NOTED	AS NOTED
	BRANCH CIRCUIT PANELBOARD: 240 VAC	TOP 78" AFF
	CIRCUIT BREAKER	EXISTING
	ELECTRICAL EQUIPMENT: DENOTED BY LABEL	AS NOTED
	ELECTRIC UTILITY METER/CABINET	AS REQUIRED BY UTILITY COMPANY
'EQUIP'	EQUIPMENT LABEL	REFER TO RESPECTIVE SCHEDULE
PNL–CIR	PANELBOARD–CIRCUIT DESIGNATION	REFER TO PANEL SCHEDULE
# #	KEYED NOTES	REFER TO LIKE–NUMBERED NOTES
	CIRCUIT/CONDUIT OR CABLE TURNING UP/RISER	WIRES INDICATED AS FOLLOWS:
	CIRCUIT/CONDUIT OR CABLE TURNING DOWN/DROP	TWO WIRES: *
	CIRCUIT HOME RUN TO PANELBOARD INDICATED	NEUTRAL WIRE (TYP)
	CIRCUIT/CONDUIT FLEXIBLE CONNECTION	PHASE WIRE (TYP); THREE WIRES, ETC.
	CIRCUIT/CONDUIT OR CABLE CONCEALED IN CEILING OR WALL	EQUIPMENT GROUND WIRE
	CIRCUIT/CONDUIT OR CABLE EXPOSED	*MIN 2 #12 + #12 EG – 1/2" C FOR ALL POWER AND LIGHTING RACEWAYS UON OR SPECIFIED
?	LIGHTING FIXTURE TAG	REFER TO SCHEDULE
#	EQUIPMENT TAG: EQUIPMENT BY OTHERS, COORDINATE DESIGNATION WITH RESPECTIVE DISCIPLINE	REFER TO RESPECTIVE DRAWINGS

ABBREVIATIONS:

A	AMPS OR AMPERE	FC	FOOTCANDLE	NEMA	NATIONAL ELECTRICAL MANUFACTURERS ASSOCIATION
A/C	AIR CONDITIONING	FLA	FULL LOAD AMPS	NFPA	NATIONAL FIRE PROTECTION ASSOCIATION
A/E	ARCHITECT/ENGINEER	FT	FOOT (FEET)	NO	NORMALLY OPEN
AF	AMPERE FRAME	GC	GENERAL CONTRACTOR	NTS	NOT TO SCALE
AFCI	ARC–FAULT CIRCUIT INTERRUPTER	GEN	GENERATOR	OB	OUTLET BOX
AFF	ABOVE FINISHED FLOOR	GFCI	GROUND–FAULT CIRCUIT INTERRUPTER	P	POLE
AFG	ABOVE FINISHED GRADE	GND	GROUND	PA	PUBLIC ADDRESS
AHJ	AUTHORITY HAVING JURISDICTION	HOA	HAND–OFF–AUTO	PB	PULL BOX
AIC	AMPERE INTERRUPTING CAPACITY	HP	HORSEPOWER	PH/ϕ	PHASE
AL	ALUMINUM	HPS	HIGH PRESSURE SODIUM	PNL	PANELBOARD (PANEL)
ANSI	AMERICAN NATIONAL STANDARDS INSTITUTE	HV	HIGH VOLTAGE	RECPT	RECEPTACLE
ASD	ADJUSTABLE SPEED DRIVE	HZ	HERTZ	SCC	SHORT CIRCUIT CAPACITY
AT	AMPERE TRIP	IG	ISOLATED GROUND	SF	SQUARE FOOT (FEET)
ATS	AUTOMATIC TRANSFER SWITCH	IN	INCH (INCHES)	SPEC	SPECIFICATION
AUTO	AUTOMATIC	JB	JUNCTION BOX	SPD	SURGE PROTECTIVE DEVICE
AWG	AMERICAN WIRE GAUGE	kcmil	THOUSAND CIRCULAR MIL	SS	STAINLESS STEEL
BLDG	BUILDING	kV	KILOVOLT	SWBD	SWITCHBOARD
BFG	BELOW FINISHED GRADE	kVA	KILOVOLT AMPERE	SWGR	SWITCHGEAR
BRKR	BREAKER	kW	KILOWATT	TELECOM	TELECOMMUNICATIONS
C	CONDUIT	kWh	KILOWATT HOUR	TR	TAMPER RESISTANT
CB	CIRCUIT BREAKER	LED	LIGHT EMITTING DIODE	TYP	TYPICAL
CKT	CIRCUIT	LPW	LOW PRESSURE SODIUM	U	UNKNOWN CIRCUIT
CT	CURRENT TRANSFORMER	LTG	LIGHTING	UL	UNDERWRITERS LABORATORY
CU	COPPER	LTNG	LIGHTNING	UON	UNLESS OTHERWISE NOTED
°C	DEGREES CELSIUS	LV	LOW VOLTAGE	UPS	UNINTERRUPTIBLE POWER SUPPLY
°F	DEGREES FAHRENHEIT	MAX	MAXIMUM	UTIL	UTILITY
DISC	DISCONNECT	MCA	MINIMUM CIRCUIT AMPACITY	V	VOLT OR VOLTAGE
DP	DISTRIBUTION PANELBOARD	MCB	MAIN CIRCUIT BREAKER	VA	VOLT AMPERE
DS	DISCONNECT SWITCH	MCC	MOTOR CONTROL CENTER	VD	VOLTAGE DROP
DWG	DRAWING	MDP	MAIN DISTRIBUTION PANELBOARD	VFD	VARIABLE FREQUENCY DRIVE
EC	ELECTRICAL CONTRACTOR	MH	METAL HALIDE	W	WATT OR WIRE
EG	EQUIPMENT GROUND	MHz	MEGAHERTZ	WP	WEATHERPROOF
ELEC	ELECTRIC OR ELECTRICAL	MIN	MINIMUM	WR	WEATHER RESISTANT
ELEV	ELEVATOR	MLO	MAIN LUGS ONLY	WT	WATERTIGHT
EMER	EMERGENCY	MOCP	MAXIMUM OVERCURRENT PROTECTION	XFER	TRANSFER
EPO	EMERGENCY POWER OFF	MTS	MANUAL TRANSFER SWITCH	XFMR	TRANSFORMER
EPS	EMERGENCY POWER SUPPLY	N	NEUTRAL	XP	EXPLOSION RATED
EXIST	EXISTING	NA	NOT APPLICABLE		
		NC	NORMALLY CLOSED		
		NEC	NATIONAL ELECTRICAL CODE		

NOTES:

A. MOUNTING HEIGHTS INDICATE NOMINAL MOUNTING HEIGHTS UON.

B. COUNTER HEIGHT MOUNTING SHALL BE TOP 10" ABOVE FINISHED COUNTER, MAX 48" AFF UON.

C. NUMBER PRECEDED BY PLUS (+) SIGN DENOTES VARIANT MOUNTING HEIGHT (i.e. +96).

OBJECT STATE LINETYPES:

EXISTING OBJECT OR CONSTRUCTION:

EXISTING OBJECT OR CONSTRUCTION TO BE DEMOLISHED:

NEW OBJECT OR CONSTRUCTION TO BE PROVIDED:

OBJECT STATE SUBSCRIPTS:

D	EXISTING OBJECT TO BE DEMOLISHED	M	EXISTING OBJECT TO BE REMOVED & RELOCATED
E	EXISTING OBJECT TO REMAIN	R	RELOCATED EXISTING OBJECT

PERMIT DOCUMENTS

MAY 2015

CITY OF TAMPA FLORIDA · ORGANIZED JULY 15 1887

CITY OF TAMPA
CONTRACT ADMINISTRATION DEPARTMENT
PLANNING AND DESIGN DIVISION

306 E. JACKSON STREET 4 NORTH
TAMPA, FLORIDA 33602
p: 813. 274. 8456 – f: 813. 274. 8080
url: www.tampagov.net

James E. Jackson, Jr. AIA, NOMA
City Architect

Edward D. Rice, AIA
Project Architect

Kevin L. Henika, AIA
Project Architect

Thomas A. Hester, Sr., AIA, NOMA
Project Architect

Kinsey C. Tillman
Drafting Technician

Jerry P. Sanders
Drafting Technician

Byron K. Thomas, LEED GA
Drafting Technician

MEP CONSULTANT

HALL ENGINEERING GROUP
14499 N. Dale Mabry Hwy.
Suite 179
Tampa, FL, USA 33618-2042
Tel: 813.374.2121
FL. C.O.A. #: 27620

- HALL ENGINEERING GROUP, INC. RETAINS INTELLECTUAL AND PHYSICAL RIGHTS TO THIS DOCUMENT AND ITS CONTENT AND PROHIBITS ITS PUBLISHING, DISCLOSURE OR REPRODUCTION WITHOUT CONSENT.
- THIS DOCUMENT IS VALID FOR 12 MONTHS FROM DATE OF ENGINEER'S SIGNATURE AND SEAL.

STRUCTURAL CONSULTANT

BROADWAY ENGINEERING
1335 W. CASS ST.
TAMPA, FLORIDA 33606
(813) 251-9244
FAX (813) 251-9330

CIVIL CONSULTANT

MILLS AND ASSOCIATES, INC.
3242 HENDERSON BOULEVARD
SUITE 300
TAMPA, FLORIDA 33609
(813) 876-5869

LANDSCAPE CONSULTANT

WAYNE C. PAPY CENTER
ADDITION AND RENOVATION

6925 N. FLORIDA AVENUE
TAMPA, FLORIDA 33604

FILE NUMBER

PROJECT NUMBER

ISSUE DATE
MAY, 2015

DRAWN BY
NB/JD

REVISIONS

PROFESSIONAL SEAL

KEITH W. HALL, P.E.; FL. REG. #: 55024

SCALE: AS NOTED

ELECTRICAL LEGEND AND SPECIFICATIONS

SHEET NUMBER

E1.0

x OF x

Z:\2014 projects\0414b wayne c papy athletic center-lobby exp\Drawings\MEP\sheet set\0414B_E1.0 Electrical Legend and Specifications.dwg Jun.2.2015 11:46 am

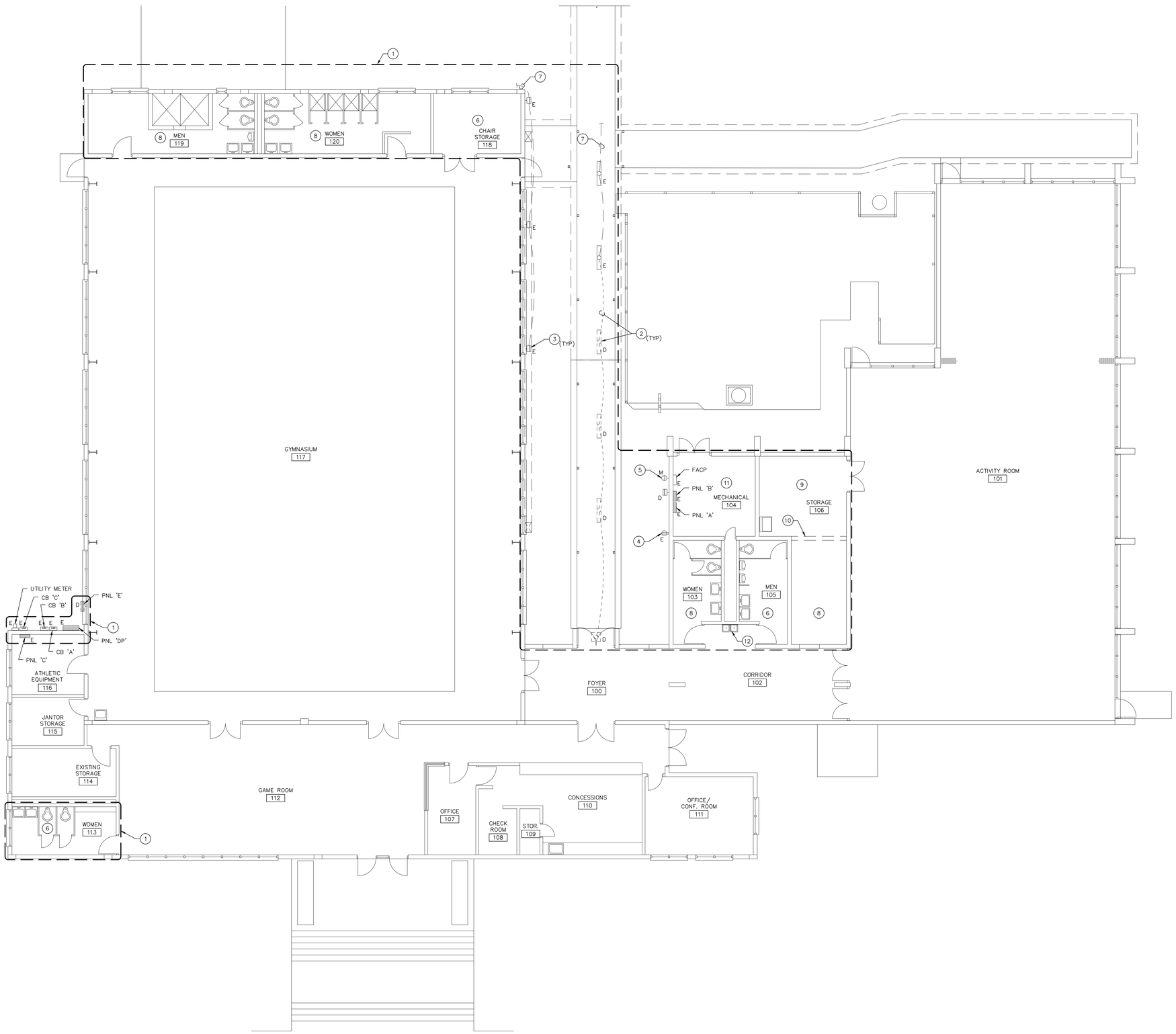

01 DEMOLITION PLAN
SCALE:1/8" = 1'-0"

DRAWING GENERAL NOTES

A. FULLY FIELD INVESTIGATE PRIOR TO DEMOLITION OF CONDUIT AND WIRE. CONDUIT AND WIRE SHALL REMAIN IN PLACE AS REQUIRED FOR SERVING DOWN STREAM LIGHTS AND DEVICES.

B. DEVICES ON EXISTING WALL TO REMAIN SHALL BE REPLACED WITH NEW DEVICES AND COVER PLATES IN KIND AND TYPE WITH SPECIFIED NEW.

C. REFER TO SHEET E4.1 FOR ADDITIONAL INFORMATION.

DRAWING NOTES

1. PROJECT AREA OF WORK; UNLESS OTHERWISE NOTED, NO WORK SHALL BE PERFORMED OUTSIDE THIS AREA.
2. REMOVE BREEZEWAY LIGHT FIXTURES, ASSOCIATED CONDUIT AND WIRE BACK TO EXISTING LIGHT TO REMAIN.
3. EXISTING LIGHT FIXTURE TO REMAIN, COORDINATE LOCATION WITH NEW CONSTRUCTION. RELOCATE FIXTURE AND MODIFY ASSOCIATED CONDUIT AND WIRE AS REQUIRED.
4. REMOVE RECEPTACLE AND COVER. PREPARE EXISTING BOX AND WIRE FOR RE-USE.
5. RELOCATE PHOTOCELL, ASSOCIATED CONDUIT AND WIRE SERVING LIGHTING FIXTURES ON THIS CIRCUIT TO EXTERIOR OF NEW CONSTRUCTION AS REQUIRED.
6. REMOVE LIGHTING AND LIGHTING CONTROLS BACK TO NEAREST JUNCTION BOX ABOVE THE CEILING SERVING THIS SPACE. ALL OTHER DEVICES SHALL BE EXISTING TO REMAIN.
7. TO OTHER EXISTING LIGHT FIXTURES TO REMAIN.
8. REMOVE LIGHTING, LIGHTING CONTROLS, DEVICES, EQUIPMENT POWER AND ASSOCIATED CONDUIT AND WIRE BACK TO NEAREST JUNCTION BOX ABOVE THE CEILING SERVING THIS SPACE. PREPARE CIRCUITS FOR RE-USE DURING NEW CONSTRUCTION.
9. LIGHTING AND POWER FOR THIS AREA OF ROOM 106 SHALL BE EXISTING TO REMAIN. EXTEND CIRCUITS AS REQUIRED TO MAINTAIN CONTINUOUS OPERATION OF LIGHTING AND DEVICES.
10. NEW WALL TO BE INSTALLED DURING NEW CONSTRUCTION. SHOWN FOR REFERENCE TO IDENTIFY DELINEATION OF DEMOLITION SCOPE.
11. LIGHTING, POWER, EQUIPMENT AND DEVICES TO REMAIN IN THIS SPACE.
12. EXISTING RECEPTACLE DEVICE SERVING EWC SHALL BE REPLACED WITH NEW RECEPTACLE DEVICE.

PERMIT DOCUMENTS
MAY 2015

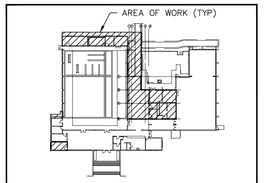

00 KEY PLAN
SCALE:N.T.S

CITY OF TAMPA
CONTRACT ADMINISTRATION DEPARTMENT
PLANNING AND DESIGN DIVISION
306 E. JACKSON STREET 4 NORTH
TAMPA, FLORIDA 33602
p: 813. 274. 8456 – f: 813. 274. 8080
url: www.tampagov.net

James E. Jackson, Jr. AIA, NOMA
City Architect

Edward D. Rice, AIA
Project Architect

Kevin L. Henika, AIA
Project Architect

Thomas A. Hester, Sr., AIA, NOMA
Project Architect

Kinsey C. Tillman
Drafting Technician

Jerry P. Sanders
Drafting Technician

Byron K. Thomas, LEED GA
Drafting Technician

MEP CONSULTANT
HALL ENGINEERING GROUP
14499 N. Dale Mabry Hwy.
Suite 179
Tampa, Fla. USA 33618-2042
Tel: 813.374.2121
FL. C.O.A. #: 27620

HALL ENGINEERING GROUP INC. RETAINS OWNERSHIP OF ALL PROPRIETARY INFORMATION, DESIGNS, DRAWINGS, SPECIFICATIONS, EQUIPMENT, DATA OR OTHER INFORMATION. THIS DOCUMENT IS VALID FOR 1 MONTH FROM DATE OF ISSUANCE. REPRODUCTION PROHIBITED.

STRUCTURAL CONSULTANT
BROADWAY ENGINEERING
1335 W. CASS ST.
TAMPA, FLORIDA 33606
(813) 251-9244
FAX (813) 251-9330

CIVIL CONSULTANT
MILLS AND ASSOCIATES, INC.
3242 HENDERSON BOULEVARD
SUITE 300
TAMPA, FLORIDA 33609
(813) 876-5869

LANDSCAPE CONSULTANT

WAYNE C. PAPY CENTER ADDITION AND RENOVATION
6925 N. FLORIDA AVENUE
TAMPA, FLORIDA 33604

FILE NUMBER

PROJECT NUMBER

ISSUE DATE
MAY, 2015

DRAWN BY
NB/JD

REVISIONS

PROFESSIONAL SEAL

KEITH W. HALL, P.E., FL REG. #: 55024

SCALE: AS NOTED

DEMOLITION PLAN

SHEET NUMBER
E2.1

X OF X

Z:\2014 projects\0414b wayne c papy athletic center-lobby exp\Drawings\MEP\sheet set\0414B_E2.1 Demolition Plan.dwg Jun.2.2015 11:46 am

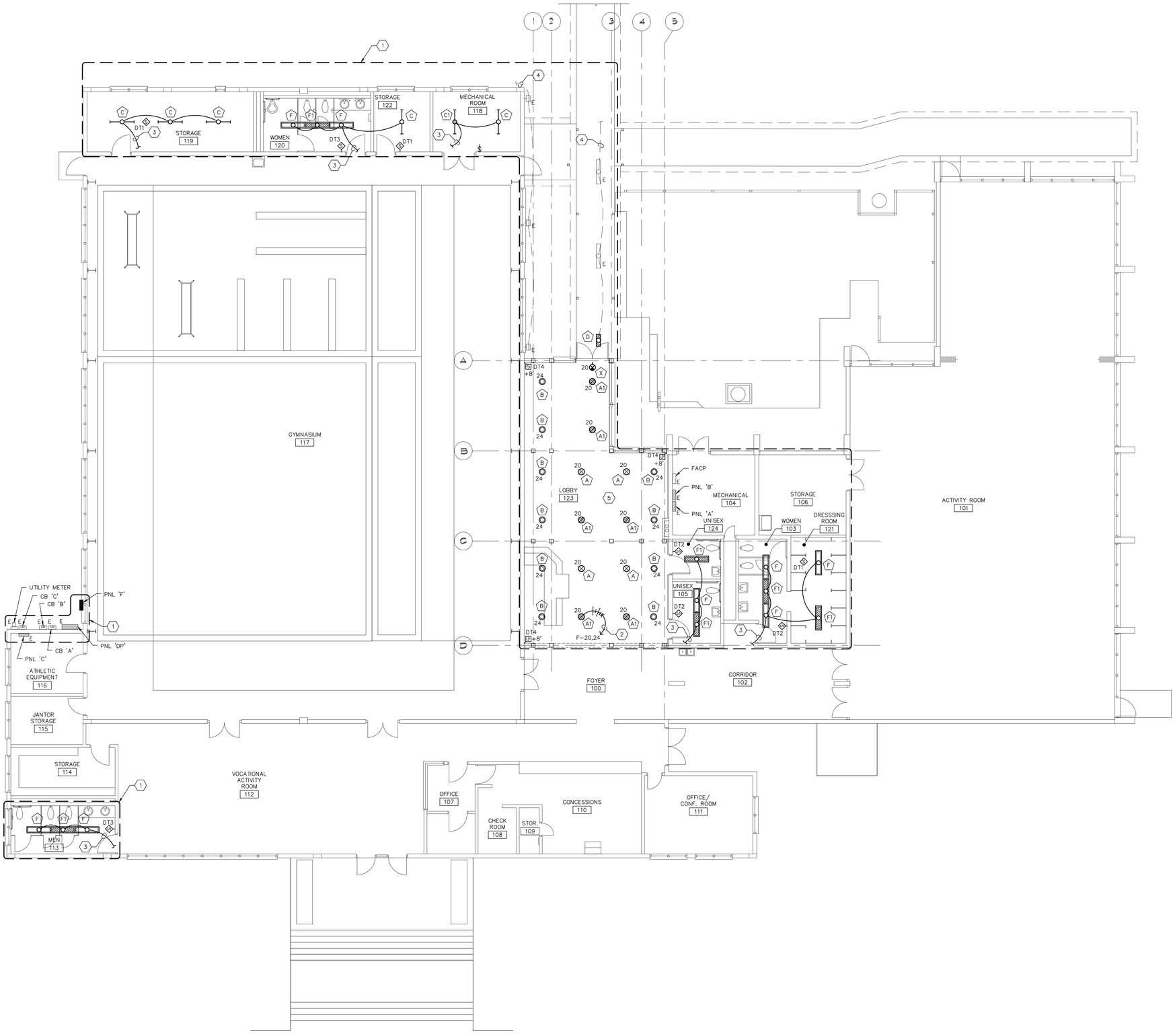

01 LIGHTING PLAN
SCALE:1/8" = 1'-0"

DRAWING GENERAL NOTES

A. CIRCUIT ALL EXIT SIGNS AND EMERGENCY BALLASTS WITH AN UNSWITCHED "HOT" CONDUCTOR.

DRAWING NOTES

1. PROJECT AREA OF WORK; UNLESS OTHERWISE NOTED, NO WORK SHALL BE PERFORMED OUTSIDE THIS AREA.
2. 4 #10 + #10 EG – 3/4 C.
3. CONNECT TO EXISTING LIGHTING CIRCUIT SERVING THIS SPACE.
4. TO OTHER LIGHTING FIXTURES EXISTING TO REMAIN.
5. REFER TO ARCHITECTURAL FOR PAINTING EXPOSED CONDUITS AND BOXES IN THIS AREA. ALL EXPOSED CONDUIT SHOULD BE ROUTED TIGHT TO STRUCTURE AND WITH 90° BENDS ONLY.

PERMIT DOCUMENTS
MAY 2015

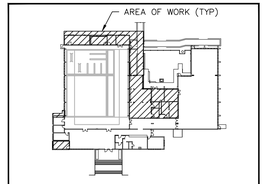

00 KEY PLAN
SCALE:N.T.S

CITY OF TAMPA
CONTRACT ADMINISTRATION DEPARTMENT
PLANNING AND DESIGN DIVISION
306 E. JACKSON STREET 4 NORTH
TAMPA, FLORIDA 33602
p: 813. 274. 8456 – f: 813. 274. 8080
url: www.tampagov.net

James E. Jackson, Jr. AIA, NOMA
City Architect
Edward D. Rice, AIA
Project Architect
Kevin L. Henika, AIA
Project Architect
Thomas A. Hester, Sr., AIA, NOMA
Project Architect
Kinsey C. Tillman
Drafting Technician
Jerry P. Sanders
Drafting Technician
Byron K. Thomas, LEED GA
Drafting Technician

MEP CONSULTANT
HALL ENGINEERING GROUP
14499 N. Dale Mabry Hwy.
Suite 179
Tampa, FL, USA 33618-2042
Tel: 813.374.2121
FL. C.O.A. #: 27620

HALL ENGINEERING GROUP, INC. RETAINS INTELLECTUAL AND PHYSICAL RIGHTS TO THIS DOCUMENT AND IS CONTENT AND PROHIBITS ITS REGARDING, DISCLOSURE OR REPRODUCTION WITHOUT CONSENT. THIS DOCUMENT IS VALID FOR 12 MONTHS FROM DATE OF ENGINEER'S SIGNATURE AND SEAL.

STRUCTURAL CONSULTANT
BROADWAY ENGINEERING
1335 W. CASS ST.
TAMPA, FLORIDA 33606
(813) 251-9244
FAX. (813) 251-9330

CIVIL CONSULTANT
MILLS AND ASSOCIATES, INC.
3242 HENDERSON BOULEVARD
SUITE 300
TAMPA, FLORIDA 33609
(813) 876-5869

LANDSCAPE CONSULTANT

WAYNE C. PAPY CENTER
ADDITION AND RENOVATION
6925 N. FLORIDA AVENUE
TAMPA, FLORIDA 33604

FILE NUMBER

PROJECT NUMBER

ISSUE DATE
MAY, 2015

DRAWN BY
NB/JD

REVISIONS

PROFESSIONAL SEAL

KEITH W. HALL, P.E.; FL. REG. #: 55024

SCALE: AS NOTED

LIGHTING PLAN

SHEET NUMBER
E3.1

X OF X

Z:\2014 projects\0414b wayne c papy athletic center-lobby exp\Drawings\MEP\sheet set\0414B_E3.1 Lighting Plan.dwg Jun.2,2015 11:46 am

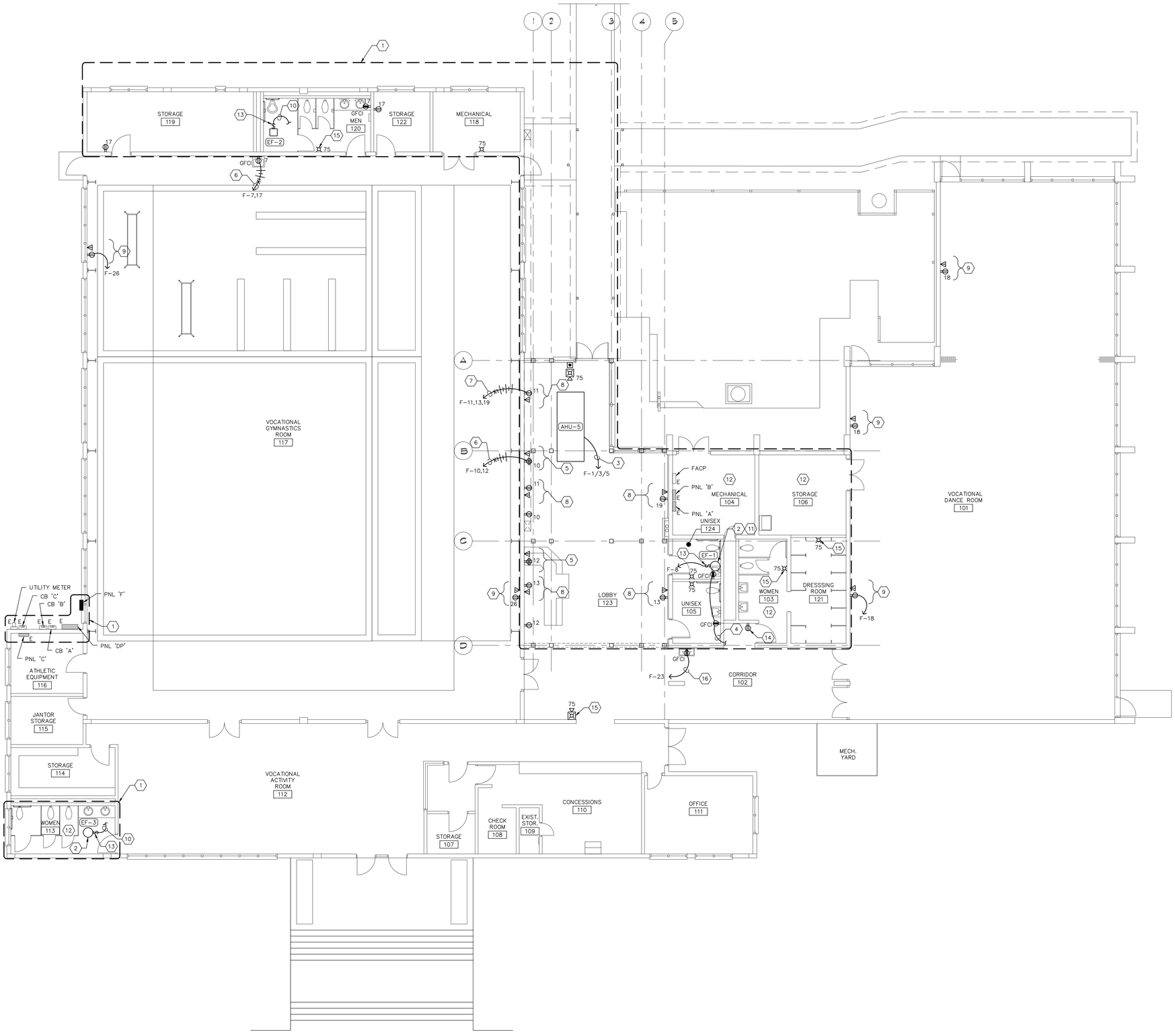

01 POWER PLAN
SCALE:1/8" = 1'-0"

DRAWING GENERAL NOTES

A. ALL NEW FIRE ALARM DEVICES SHOWN SHALL BE CONNECTED TO EXISTING FIRE ALARM SYSTEM. MATCH EXISTING MFG AND DEVICES.

DRAWING NOTES

1. PROJECT AREA OF WORK; UNLESS OTHERWISE NOTED, NO WORK SHALL BE PERFORMED OUTSIDE THIS AREA.
2. EXHAUST FAN LOCATED ON ROOF. COORDINATE EXACT LOCATION WITH DIV 15.
3. 4 #8 + #4 EG – 1 1/4" C. CONNECT TO INTEGRAL DISCONNECT PROVIDED BY DIV 15.
4. CONNECT TO EXISTING RECEPTACLE CIRCUIT SERVING THIS SPACE.
5. COORDINATE EXACT LOCATION WITH APPROVED MILLWORK DRAWINGS/ARCHITECT.
6. 4 #10 + #10 EG – 3/4" C.
7. 6 #10 + #10 EG – 3/4 C.
8. POWER AND DATA FOR FLAT SCREEN LOBBY TV'S, COORDINATE FINAL LOCATION AND MOUNTING HEIGHT WITH OWNER/ARCHITECT. ROUTE 1" C BETWEEN DATA OUTLET BOXES FOR TV AND RESPECTIVE CAMERA, REFER TO NOTE #9. DATA INFRASTRUCTURE WIRING BY OTHERS. COORDINATE WITH OWNER/ARCHITECT FOR ROUTING BETWEEN TV AND CAMERA OUTLET BOXES.
9. POWER AND DATA FOR CAMERAS, COORDINATE FINAL LOCATION AND MOUNTING HEIGHT WITH OWNER/ARCHITECT. FOR CONNECTION BETWEEN TV'S AND CAMERAS REFER TO NOTE #8.
10. CONNECT EXHAUST FAN TO LIGHTING CIRCUIT FOR THE FAN TO OPERATE AND BECOME ENERGIZED WHEN THE LIGHTING CONTROL DEVICE IS IN THE "ON" POSITION. REFER TO MECHANICAL DRAWINGS FOR ADDITIONAL INFORMATION ON EXHAUST FAN SEQUENCE OF OPERATIONS.
11. REFER TO MECHANICAL DRAWINGS FOR ADDITIONAL INFORMATION ON EXHAUST FAN SEQUENCE OF OPERATIONS.
12. NO ADDITIONAL ELECTRICAL DEVICES ADDED IN THIS SPACE. EXISTING DEVICES SHALL REMAIN FOR RE-USE FROM PREVIOUS SPACE.
13. INTEGRAL DISCONNECT PROVIDED WITH UNIT BY DIV 15.
14. PROVIDE NEW RECEPTACLE DEVICE AND COVER PLATE AT EXISTING OUTLET BOX. RE-USE EXISTING WIRING TO CONNECT TO EXISTING CIRCUIT.
15. PROVIDE AND INSTALL A NEW FIRE ALARM NOTIFICATION DEVICE IF A DEVICE IS NOT CURRENTLY EXISTING TO REMAIN.
16. 2#10 + #10 EG – 3/4" C.

PERMIT DOCUMENTS
MAY 2015

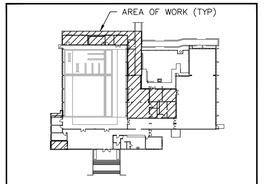

00 KEY PLAN
SCALE:N.T.S

CITY OF TAMPA
CONTRACT ADMINISTRATION DEPARTMENT
PLANNING AND DESIGN DIVISION
306 E. JACKSON STREET 4 NORTH
TAMPA, FLORIDA 33602
p: 813. 274. 8456 – f: 813. 274. 8080
url: www.tampagov.net

James E. Jackson, Jr. AIA, NOMA
City Architect
Edward D. Rice, AIA
Project Architect
Kevin L. Henika, AIA
Project Architect
Thomas A. Hester, Sr., AIA, NOMA
Project Architect
Kinsey C. Tillman
Drafting Technician
Jerry P. Sanders
Drafting Technician
Byron K. Thomas, LEED GA
Drafting Technician

MEP CONSULTANT
HALL ENGINEERING GROUP
14499 N. Dale Mabry Hwy.
Suite 179
Tampa, FL, USA 33618-2042
Tel: 813.374.2121
FL. C.O.A. #: 27620

STRUCTURAL CONSULTANT
BROADWAY ENGINEERING
1338 W. CASS ST.
TAMPA, FLORIDA 33606
(813) 251-9244
FAX (813) 251-9330

CIVIL CONSULTANT
MILLS AND ASSOCIATES, INC.
3242 HENDERSON BOULEVARD
SUITE 300
TAMPA, FLORIDA 33609
(813) 876-5869

LANDSCAPE CONSULTANT

HALL ENGINEERING GROUP INC. RETAINS OWNERSHIP OF ALL RIGHTS TO THIS DOCUMENT. REPRODUCTION, DISTRIBUTION, DISCLOSURE OR REPRODUCTION OF THIS DOCUMENT IS VALID FOR 1 MONTH FROM DATE OF ISSUANCE BY HALL ENGINEERING.

WAYNE C. PAPY CENTER ADDITION AND RENOVATION
6925 N. FLORIDA AVENUE
TAMPA, FLORIDA 33604

FILE NUMBER

PROJECT NUMBER

ISSUE DATE
MAY, 2015

DRAWN BY
NB/JD

REVISIONS

PROFESSIONAL SEAL

KEITH W. HALL, P.E.; FL. REG. #: 55024

SCALE: AS NOTED

POWER PLAN

SHEET NUMBER
E3.2

x OF x

Z:\2014 projects\0414b wayne c papy athletic center-lobby exp\Drawings\MEP\sheet set\0414B_E3.2 Power Plan.dwg Jun.2.2015 11:47 am

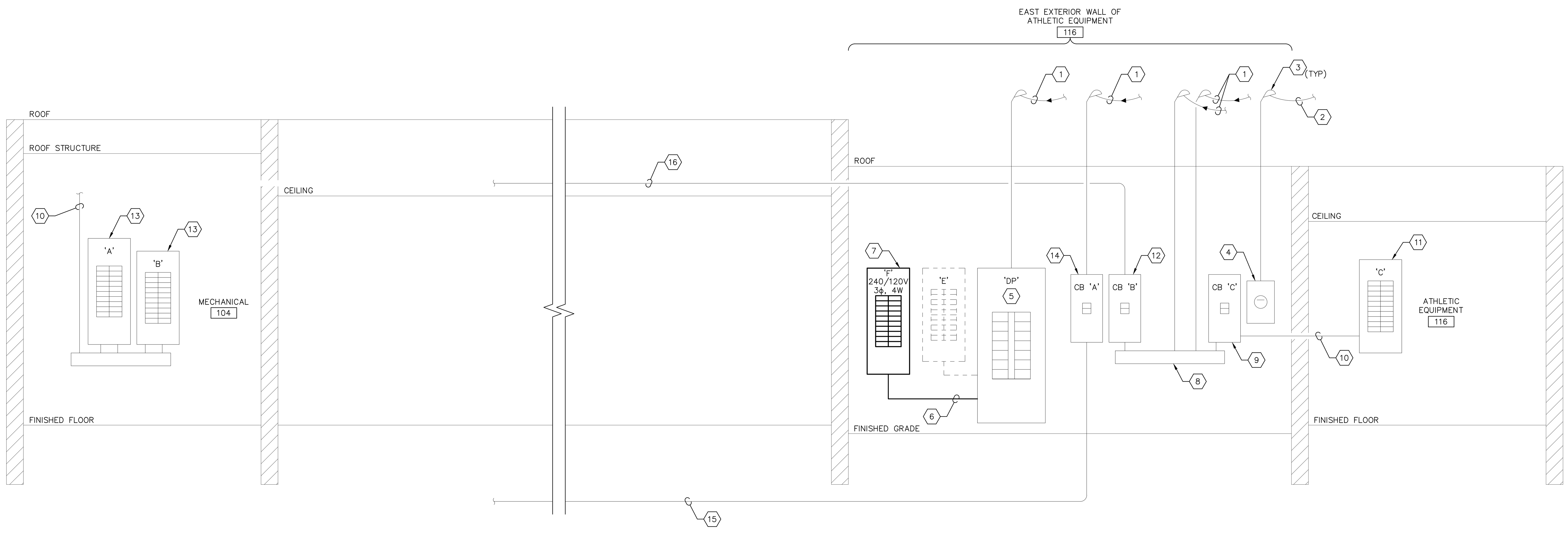

01 POWER ONE-LINE DIAGRAM
SCALE: NONE

DRAWING NOTES

1. EXISTING 240/120 V, 3ϕ, 4W, OVERHEAD SECONDARY ELECTRICAL SERVICE.
2. EXISTING CT WIRING FROM 200 A CT'S AT WEATHERHEAD MAST RACK.
3. EXISTING WEATHERHEAD.
4. EXISTING UTILITY METER.
5. EXISTING GE, SPECTRA SERIES DISTRIBUTION PANEL; 400 A MCB, 42,000 A MAXIMUM AIC RATING, 240/120 V, 3ϕ, 4W, NEMA 3R.
6. 4 #3/0 + #6 EG – 2 1/2" C BRANCH PANEL FEEDER CIRCUIT FED FROM SPARE 200 A CIRCUIT BREAKER MADE AVAILABLE DURING DEMOLITION OF EXISTING PANEL 'E'.
7. NEW BRANCH PANELBOARD – REFER TO SCHEDULE (THIS SHEET) FOR ADDITIONAL INFORMATION.
8. EXISTING NEMA 3R WIREWAY.
9. EXISTING NEMA 3R ENCLOSED CIRCUIT BREAKER FOR PANEL 'C'.
10. EXISTING FEEDER CIRCUIT.
11. EXISTING GE PANELBOARD; 200 A MCB, 240/120 V, 3ϕ, 4W, NEMA 1.
12. EXISTING NEMA 3R ENCLOSED CIRCUIT BREAKER FOR PANEL 'B'.
13. EXISTING GOULD, I-T-E PANELBOARD; 150 A MCB, 240/120 V, 3ϕ, 4W, NEMA 1.
14. EXISTING NEMA 3R ENCLOSED CIRCUIT BREAKER FOR PANEL 'A'.
15. EXISTING FEEDER CIRCUIT TO PANEL 'A'.
16. EXISTING FEEDER CIRCUIT TO PANEL 'B'.

OCCUPANCY SENSOR SCHEDULE

TAG	MANUFACTURER/ MODEL NUMBER	SENSING TECHNOLOGY	COVERAGE ANGLE (DEG)	COVERAGE AREA (SF)	DESCRIPTION
DT1	LEVITON: ODC10–MDW	DUAL TECHNOLOGY	360	1000	CEILING MOUNTED
DT2	LEVITON: OSSMT–MD	DUAL TECHNOLOGY	180	2400	WALL SWITCH – SINGLE RELAY
DT3	LEVITON: OSSMD–FT	DUAL TECHNOLOGY	180	1000	WALL SWITCH – DUAL RELAY
DT4	LEVITON: ODW12–MDW	DUAL TECHNOLOGY	180	1200	WALL/CORNER SWITCH – DUAL RELAY

NOTES:
1. OCCUPANCY SENSORS SHALL BE INSTALLED AND AIMED IN ACCORDANCE WITH THE MANUFACTURER'S INSTALLATION INSTRUCTIONS.
2. PROVIDE 120V AC RATED CONTACTS FOR CONTROL OF LIGHTING CIRCUITS INDICATED ON PLANS.
3. FINAL SELECTION OF FINISH/COLOR BY OWNER/ARCHITECT
4. SET OCCUPANCY SENSOR ADJUSTABLE SETTINGS TO THE SATISFACTION OF ARCHITECT/OWNER.
5. SHOP DRAWINGS SHALL BE SUBMITTED FOR EACH OCCUPANCY SENSOR TYPE TO BE INSTALLED, IN ACCORDANCE WITH THE PROJECT SPECIFICATIONS. PROVIDE DESCRIPTIVE LITERATURE FOR ALL SENSORS AND COMPONENTS (SUCH AS POWER PACKS) REQUIRED FOR A COMPLETE INSTALLATION. LITERATURE SHALL BE MARKED TO SPECIFICALLY IDENTIFY THE MODEL NUMBERS, OPTIONS, SELECTIONS, COLORS, ETC.

LIGHTING FIXTURE SCHEDULE

TAG	MANUFACTURER/ CATALOG NUMBER	LAMP DATA		VOLTAGE	MOUNTING	DESCRIPTION
		TYPE	WATTS			
A	LEDRA : WILA P608–6–6–9–DA60–80	LED	23	120/277	PENDANT AT 8'–0" AFF TO BOTTOM OF FIXTURE	PENDANT CYLINDER, 6" APERTURE, 60° REFLECTOR ALUMINUM HOUSING, PENANT CORD LENGTH AS REQUIRED.
A1	LEDRA : WILA P608–6–6–9–DA60–80	LED	23	120/277	PENDANT AT 8'–0" AFF TO BOTTOM OF FIXTURE	PENDANT CYLINDER, 6" APERTURE, 60° REFLECTOR ALUMINUM HOUSING, PENDANT STEM LENGTH AS REQUIRED. BODINE EMERGENCY BALLAST : BLS17C.
B	PRESCOLITE : LITEFRAME LF6LEDG4–6LFLED5G4–35K	LED	15.9	120/277	RECESSED	6" OPEN DOWNLIGHT
C	DAY–O–LITE : GENERATION G8–D–2–T8–S–4–W–UNV	T8	40.4	120/277	SURFACE	4' WRAP AROUND FIXTURE WITH BLADE LOUVERS
C1	DAY–O–LITE : GENERATION G8–D–2–T8–S–4–W–UNV–EPC	T8	70.4	120/277	SURFACE	4' WRAP AROUND FIXTURE WITH BLADE LOUVERS AND EMERGENCY BALLAST.
D	MAGNIFLOOD : CEILINGLITE CSIF–32/2–EM	CFL	70.4	120	SURFACE	19" CEILING MOUNTED AT DOOR ENTRY/EXIT
F	COLUMBIA : SERRANO SER–14–1–32–G–C–F–E–U–F0835	T8	35.2	120/277	RECESSED	1' X 4" ARCHITECTURAL HIGH EFFICIENCY
F1	COLUMBIA : SERRANO SER–14–1–32–G–C–F–E–U–F0835 –EL	T8	35.2	120/277	RECESSED	1' X 4" ARCHITECTURAL HIGH EFFICIENCY AND EMERGENCY BALLAST
X	HUBBEL: DUAL LITE EVE–U–R–W	LED	2	120/277	SURFACE	SURFACE MOUNT EXIT SIGN WITH BATTERY BACK–UP

NOTES:
1. REFER TO SPECIFICATIONS FOR LAMP CORRELATED COLOR TEMPERATURE (CCT) .
2. FINAL MATERIAL COLORS/FINISHES TO BE DETERMINED BY ARCHITECT.
3. FIXTURES OTHER THAN THOSE LISTED ON THE LIGHTING FIXTURE SCHEDULE BY MANUFACTURER AND CATALOG NUMBER SUBMITTED FOR SUBSTITUTION WILL REQUIRE THE SUBMITTAL TO INCLUDE THE FOLLOWING IN ORDER TO BE CONSIDERED. SUBMIT AFTER CONTRACT AWARD, NO PRE–CONTRACT SUBMITTAL WILL BE ACCEPTED.
   - A. FIVE (5) SETS OF ORIGINAL COLOR FACTORY CATALOG SUBMITTALS.
   - B. FIVE (5) SETS OF COMPLETE POINT TO POINT PHOTOMETRIC CALCULATIONS FOR NORMAL AND EMERGENCY POWER AS REQUIRED.
   - C. A DISC CONTAINING THE IES PHOTOMETRY FILE FOR EACH FIXTURE TYPE.
   - D. IF FIXTURES ARE SUBMITTED FOR REVIEW FOR "VALUE ENGINEERING", THE SUBMITTING ELECTRICAL CONTRACTOR SHALL PAY (IN ADVANCE) THE ARCHITECT'S AND ENGINEER'S HOURLY FEES FOR SUBMITTAL REVIEW.
4. SUBJECT TO COMPLIANCE WITH THE ABOVE REQUIREMENTS, THE FOLLOWING MANUFACTURERS, IN ADDITION TO THOSE LISTED IN THE LIGHTING FIXTURE SCHEDULE, MAY BE INCORPORATED INTO THE PROJECT.
   - A. HUBBELL/COLUMBIA LIGHTING
   - B. COOPER

LOAD SUMMARY SCHEDULE

LOAD DESCRIPTION	LOAD
ESTIMATED EXISTING LOAD – PANEL 'E'	43.7 kVA
ESTIMATED REMOVED LOAD – PANEL 'E'	43.7 kVA
CALCULATED NEW LOAD – PANEL 'F'	20.6 kVA
TOTAL NET DIFFERENCE	–23.1 kVA
TOTAL AMPERES (@ 240 V, 3 Ø)	–55.5 AMPS

THE EXISTING ESTIMATED LOAD IN PANEL 'E' WAS CALCULATED BASED ON A PERCENTAGE OF THE SUM OF THE BRANCH CIRCUIT BREAKER RATINGS INSTALLED ON A 240V, 3 PH, 4 W, DELTA CONNECTED, HIGH LEG SYSTEM. PANEL 'E' CONTAINED THREE (3) CIRCUIT BREAKERS WHICH CONSISTED OF TWO (2) 100 AMP, 3 POLE AND ONE (1) 80 AMP, 2 POLE. THE NEC ALLOWS A CONNECTED LOAD OF UP TO 80% OF THESE BRANCH CIRCUIT BREAKER RATINGS. FOR A MORE CONSERVATIVE APPROACH, PANEL 'E' ESTIMATED EXISTING LOAD WAS CALCULATED AT 65% OF THE BRANCH CIRCUIT BREAKER RATINGS. THE CALCULATED NEW LOAD OF PANEL 'F' IS LESS THAN THE ESTIMATED REMOVED LOAD OF PANEL 'E', THEREFORE THE NEW LOAD IS ACCEPTABLE.

PANELBOARD F SCHEDULE

VOLTAGE (L–L/L–N): 240 / 120 V | PHASE: 3 | WIRES: 4 | MAIN TYPE: MLO | MAIN OC DEVICE:
BUS RATING: 225 A | MIN AIC RATING: 42,000 A | ENCLOSURE TYPE: NEMA 3R | MOUNTING: SURFACE
FEED–THRU LUGS: NO | SUB–FEED LUGS: NO | ISOLATED GND BUS: NO | NEUTRAL BUS: YES

CKT NO	DESCRIPTION	BREAKER POLE	BREAKER TRIP	PHASE LOADS (VA) A		B		C		BREAKER TRIP	BREAKER POLE	DESCRIPTION	CKT NO
1	AHU–5	3	80	6,163	0					30	3	SPD	2
3	"					6,163	0					"	4
5	"							6,163	0			"	6
7	RECEPT. – EWC	1	20	600	480					20	1	EF–1	8
9	SPARE	1	20			0	0			20	1	SPARE	10
11	RECEPT. – LOBBY TV'S	1	20					1,200	900	20	1	RECEPT. – RECEPTION DESK	12
13	RECEPT. – LOBBY TV'S	1	20	1,200	900					20	1	RECEPT. – RECEPTION DESK	14
15	SPARE	1	20			0	0			20	1	SPARE	16
17	RECEPT. – RM 120 & 122	1	20					360	360	20	1	RECEPT. – DANCE CAMERAS	18
19	RECEPT – LOBBY TV'S	1	20	600	480					20	1	LIGHTS – LOBBY	20
21	SPARE	1	20			0	0			20	1	SPARE	22
23	RECEPT. – EWC	1	20					600	150	20	1	LIGHTS – LOBBY	24
25	SPACE			–	360							RECEPT. – GYM CAMERAS	26
27	SPACE					–	–					SPACE	28
29	SPACE							–	–			SPACE	30
			TOTAL	10,783		6,163		9,733					

LOAD CLASSIFICATION	CONNECTED (VA)	DEMAND FACTOR	DEMAND (VA)
EXTERIOR LIGHTING	0	1.25	0
INTERIOR LIGHTING	630	1.25	788
RECEPTACLE (1st 10 k)	7,080	1.00	7,080
RECEPTACLE (Over 10 k)	0	0.50	0
AIR HANDLERS	18,489	1.00	18,489
ELECTRIC HEAT	0	1.00	0
COOLING	0	1.00	0
EQUIPMENT/MOTORS	480	1.00	480
LARGEST MOTOR	0	1.25	0
MISCELLANEOUS	0	1.00	0
TOTAL	26,679		26,837

PANEL SUMMARY	
CONNECTED	60 A
DEMAND	60 A
SPARE CAPACITY	62 %

NOTES:
1. CONNECTED AND DEMAND LOAD IS CALCULATED BASED ON THE 240V, 3 PH, 4 W, DELTA CONNECTED, HIGH LEG SYSTEM.

PERMIT DOCUMENTS
MAY 2015

CITY OF TAMPA
CONTRACT ADMINISTRATION DEPARTMENT
PLANNING AND DESIGN DIVISION
306 E. JACKSON STREET 4 NORTH
TAMPA, FLORIDA 33602
p: 813. 274. 8456 – f: 813. 274. 8080
url: www.tampagov.net

James E. Jackson, Jr. AIA, NOMA
City Architect
Edward D. Rice, AIA
Project Architect
Kevin L. Henika, AIA
Project Architect
Thomas A. Hester, Sr., AIA, NOMA
Project Architect
Kinsey C. Tillman
Drafting Technician
Jerry P. Sanders
Drafting Technician
Byron K. Thomas, LEED GA
Drafting Technician

MEP CONSULTANT
HALL ENGINEERING GROUP
14499 N. Dale Mabry Hwy.
Suite 179
Tampa, FL, USA 33618-2042
Tel: 813.374.2121
FL. C.O.A. #: 27620

HALL ENGINEERING GROUP, INC. RETAINS INTELLECTUAL AND PHYSICAL RIGHTS TO THIS DOCUMENT AND ITS CONTENT AND PROHIBITS ITS PUBLISHING, DISCLOSURE OR REPRODUCTION WITHOUT CONSENT.
THIS DOCUMENT IS VALID FOR 12 MONTHS FROM DATE OF ENGINEER'S SIGNATURE AND SEAL.

STRUCTURAL CONSULTANT
BROADWAY ENGINEERING
1335 W. CASS ST.
TAMPA, FLORIDA 33606
(813) 251-9244
FAX (813) 251-9330

CIVIL CONSULTANT
MILLS AND ASSOCIATES, INC.
3242 HENDERSON BOULEVARD
SUITE 300
TAMPA, FLORIDA 33609
(813) 876-5869

LANDSCAPE CONSULTANT

WAYNE C. PAPY CENTER
ADDITION AND RENOVATION
6925 N. FLORIDA AVENUE
TAMPA, FLORIDA 33604

FILE NUMBER

PROJECT NUMBER

ISSUE DATE
MAY, 2015

DRAWN BY
NB/JD

REVISIONS

PROFESSIONAL SEAL

SCALE: AS NOTED

POWER ONE-LINE DIAGRAM AND SCHEDULE

SHEET NUMBER
E4.1

x OF x

Z:\2014 projects\0414b wayne c papy athletic center-lobby exp\Drawings\MEP\sheet set\0414B_E4.1 Power One-Line Diagram and Schedule.dwg Jun.2.2015 11:47 am