The Enclosed Document Is Provided For Your Convenience.

Please Email ALL Questions:

MailTo:ContractAdministration@TampaGov.net

Please Let Us Know If You Plan To Bid

City of Tampa
Contract Administration Department
306 E. Jackson St. #280A4N
Tampa, FL 33602
(813)274-8456

CITY OF
TAMPA, FLORIDA

NOTICE TO BIDDERS, INSTRUCTIONS TO BIDDERS
PROPOSAL, BID BOND, FORM OF NOTICE OF AWARD,
AGREEMENT, PERFORMANCE BOND AND
SPECIFICATIONS

FOR

Contract 14-C-00049

WAYNE C. PAPY CENTER ADDITION AND RENOVATION

City of Tampa
CONTRACT ADMINISTRATION DEPARTMENT
TAMPA MUNICIPAL OFFICE BUILDING
306 E. JACKSON STREET - 4TH FLOOR NORTH
TAMPA, FLORIDA 33602

JUNE 2015

CITY OF TAMPA

Bob Buckhorn, Mayor **CONTRACT ADMINISTRATION DEPARTMENT**

ADDENDUM NO. 1

DATE: June 26, 2015

Contract 14-C-00049; Wayne C. Papy Center Addition and Renovation

Bidders on the above referenced project are hereby notified that the following addendum is made to the Contract Documents. BIDS TO BE SUBMITTED SHALL CONFORM TO THIS NOTICE.

Item 1: The Bid Date is hereby changed to July 21, 2015

Item 2: A Pre-Bid Conference is scheduled for 2:00PM July 7, 2015 in the 4th floor conference room Tampa Municipal Office Building 306 E. Jackson St. Tampa, FL 33602. Attendance is not mandatory.

All other provisions of the Contract Documents and Specifications not in conflict with this Addendum shall remain in full force and effect. Questions are to be e-mailed to Contract Administration@tampagov.net.

Jim Greiner

Jim Greiner, P.E.
Contract Management Supervisor

306 E. Jackson Street, 4N • Tampa, Florida 33602 • (813) 274-8456 • FAX: (813) 274-8080

TampaGov
www.tampagov.net

CITY OF TAMPA
CONTRACT ADMINISTRATION DEPARTMENT
306 E. Jackson Street 280A4N
Tampa, FL 33602

****

BID NOTICE MEMO
****

Bids will be received no later than 1:30 p.m. on the indicated Date(s) for the following Project(s):
****

CONTRACT NO.: 14-C-00049; Wayne C. Papy Center Addition and Renovation
BID DATE: July 21, 2015 **ESTIMATE:** $360,000 **SCOPE:** The project comprises construction of a 1,000 sf lobby addition with a steel frame superstructure, curtain wall exterior finish, standing seam metal and modified bitumen roofs, HVAC system, interior metal stud framing, drywall, finishes, painting, plumbing, electrical with all associated work required for a complete project in accordance with the Contract Documents. **PRE-BID CONFERENCE:** Tuesday, July 07, 2015, 2:00 p.m. Attendance is not mandatory, but recommended.
****

Bids will be opened in the 4th Floor Conference Room, Tampa Municipal Office Building, 306 E. Jackson Street, Tampa, Florida 33602. Pre-Bid Conference is held at the same location unless otherwise indicated. Plans and Specifications and Addenda for this work may be examined at, and downloaded from, www.demandstar.com. Backup files are available at http://www.tampagov.net/contract-administration/programs/construction-project-bidding. Subcontracting opportunities may exist for City certified Small Local Business Enterprises (SLBEs). A copy of the current SLBE directory may be obtained at www.Tampagov.net. Phone (813) 274-8456 for assistance. **Email Technical Questions to: contractadministration@tampagov.net .**

TABLE OF CONTENTS

BIDDING REQUIREMENTS

Notice to Bidders N-1
Instructions to Bidders ..... I-1a thru I-4
Insurance Requirements ..... INS-1 thru INS-2
SLBE Goal Setting List GS-1
Goal Setting List Instructions GSL-1
Sample Solicitation Letter SL-1

BID FORMS

Proposal ..... P-1 thru P-6
Good Faith Efforts Compliance Plan ..... GFECP
SLBE Solicited ..... DMI – Solicited
SLBE Utilized ..... DMI – Utilized
Bid Bond BB-1

CONTRACT FORMS

Agreement ..... A-1 thru A-15
Public Construction Bond ..... PB-1 thru PB-3

GENERAL PROVISIONS

General Provisions ..... G-1 thru G-10
Supplementary General Provisions ..... SGP-1 thru SGP-7
Special Conditions ..... SC-1 thru SC-4
Subcontractors Payment Form ..... DMI – Payments
Project Sign ..... Sign-1 thru Sign-2

SPECIFICATIONS

DIVISION 1 GENERAL REQUIREMENTS

SECTION 01010 ..... SUMMARY OF WORK ..... 01010-1 thru 01010-2
SECTION 01020 ..... ALLOWANCES ..... 01020-1 thru 01020-2
SECTION 01040 ..... PROJECT COORDINATION ..... 01040-1 thru 01040-4

DIVISION 2 SITEWORK

SECTION 02010 ..... SUBSURFACE SOIL INVESTIGATION 02010-1
SECTION 02060 ..... BUILDING DEMOLITION ..... 02060-1 thru 02060-6
SECTION 02200 ..... EARTHWORK ..... 02200-1 thru 02200-8
SECTION 02282 ..... TERMITE CONTROL ..... 02282-1 thru 02282-2
SECTION 02813 ..... IRRIGATION SYSTEMS ..... 02813-1 thru 02813-13
SECTION 02920 ..... LAWNS AND GRASSES ..... 02920-1 thru 02920-8
SECTION 02930 ..... EXTERIOR PLANTS ..... 02930-1 thru 02930-12

DIVISION 3 CONCRETE

SECTION 03300……CAST IN PLACE……03300-1 thru 03300-7
SECTION 03310.....CONCRETE WORK .....03310-1 thru 03310-19

DIVISION 5 METALS

SECTION 05120.....STRUCTURAL STEEL.....05120-1 thru 05120-8
SECTION 05210.....STEEL JOISTS.....05210-1 thru 05210-3
SECTION 05300.....METAL DECKING .....05300-1 thru 05300-4
SECTION 05400.....COLD-FORMED METAL FRAMING .....05400-1 thru 05400-3
SECTION 05500.....METAL FABRICATIONS.....05500-1 thru 05500-5

DIVISION 6 WOOD AND PLASTICS

SECTION 06100.....ROUGH CARPENTRY.....06100-1 thru 06100-4

DIVISION 7 THERMAL AND MOISTURE PROTECTION

SECTION 07210.....BUILDING INSULATION.....07210-1 thru 07210-3
SECTION 07411.....MANUFACTURED ROOF PANELS.....07411-1 thru 07411-7
SECTION 07550.....MODIFIED BITUMEN MEMBRANE ROOFING .....07550-1 thru 07550-13
SECTION 07600.....PREFABRICATED FASCIAS AND COPINGS.....07600-1 thru 07600-4
SECTION 07620.....SHEET METAL FLASHING AND TRIM .....07620-1 thru 07620-6
SECTION 07920.....JOINT SEALANTS .....07920-1 thru 07920-10

DIVISION 8 DOORS AND WINDOWS

SECTION 08110.....STEEL DOORS AND FRAMES.....08110-1 thru 08110-6
SECTION 08211.....FLUSH WOOD DOORS.....08211-1 thru 08211-5
SECTION 08710.....DOOR HARDWARE.....08710-1 thru 08710-10
SECTION 08800.....GLAZING.....08800-1 thru 08800-10
SECTION 08920.....GLAZED ALUMINUM CURTAIN WALLS.....08920-1 thru 08920-9

DIVISION 9 FINISHES

SECTION 09255.....GYPSUM BOARD ASSEMBLIES.....09255-1 thru 09255-14
SECTION 09512.....ACOUSTICAL TILE CEILINGS.....09512-1 thru 09512-8
SECTION 09651.....RESILIENT TILE FLOORING .....09651-1 thru 09651-7
SECTION 09900.....PAINTING.....09900-1 thru 09900-9

DIVISION 10 SPECIALTIES

SECTION 10155.....TOILET COMPARTMENTS.....10155-1 thru 10155-4
SECTION 10200.....LOUVERS AND VENTS.....10200-1 thru 10200-6
SECTION 10425.....SIGNS.....10425-1 thru 10425-3
SECTION 10520.....FIRE PROTECTION SPECIALTIES.....10520-1 thru 10520-6
SECTION 10730.....EXTRUDED ALUMINUM WALKWAY COVERS.....10730-1 thru 10730-5
SECTION 10801.....TOILET AND BATH ACCESSORIES .....10801-1 thru 10801-4

DIVISION 22 MECHANICAL WORK

22 00 00: PLUMBING

Section 22 05 00 ..... COMMON WORKS RESULTS FOR PLUMBING ..... 22 05 00-1 thru 22 05 00-10
Section 22 05 23 ..... GENERAL DUTY VALVES FOR PLUMPING PIPING ..... 22 05 23-1 thru 22 05 23-10
Section 22 07 00 ..... PLUMBING INSULATION ..... 22 07 00-1 thru 22 07 00-3
Section 22 11 16 ..... DOMESTIC WATER PIPING ..... 22 11 16-1 thru 22 11 16-6
Section 22 11 19 ..... DOMESTIC WATER PIPING SPECIALTIES ..... 22 11 19-1 thru 22 11 19-8
Section 22 13 16 ..... SANITARY WASTE AND VENT PIPING ..... 22 13 16-1 thru 22 13 16-2
Section 22 13 19 ..... SANITARY WASTE PIPING SPECIALTIES ..... 22 13 19-1 thru 22 13 19-3
Section 22 40 00 ..... PLUMBING FIXTURES ..... 22 40 00-1 thru 22 40 00-5

DIVISION 23 HVAC

23 00 00: HVAC

Section 23 05 00 ..... COMMON WORK RESULTS FOR HVAC ..... 23 05 00-1 thru 23 05 00-11
Section 23 05 29 ..... HANGERS AND SUPPORTS FOR HVAC PIPING AND EQUIP ..... 23 05 29-1 thru 23 05 29-10
Section 23 05 53 ..... IDENTIFICATION FOR HVAC PIPING AND EQUIPMENT ..... 23 05 53-1 thru 23 05 53-5
Section 23 05 93 ..... TESTING, ADJUSTING, AND BALANCING FOR HVAC ..... 23 05 93-1 thru 23 05 93-11
Section 23 07 00 ..... HVAC INSULATION ..... 23 07 00-1 thru 23 07 00-7
Section 23 09 00 ..... INSTRUMENTATION AND CONTROL FOR HVAC ..... 23 09 00-1 thru 23 09 00-8
Section 23 21 13 ..... HYDRONIC PIPING ..... 23 21 13-1 thru 23 21 13-10
Section 23 23 00 ..... REFRIGERANT PIPING ..... 23 23 00-1 thru 23 23 00-4
Section 23 31 13 ..... DUCTWORK ..... 23 31 13-1 thru 23 31 13-13
Section 23 34 23 ..... HVAC POWER VENTILATORS ..... 23 34 23-1 thru 23 34 23-3
Section 23 37 13 ..... AIR DISTRIBUTION DEVICES ..... 23 37 13-1 thru 23 37 13-2
Section 23 81 19 ..... AIR HANDLING UNITS ..... 23 81 19-1 thru 23 81 19-17

DIVISION 26 ELECTRICAL

26 00 00: ELECTRICAL

Section 26 05 00 ..... COMMON WORK RESULTS FOR ELECTRICAL ..... 26 05 00-1 thru 26 05 00-12
Section 26 05 19 ..... LOW-VOLTAGE ELEC. POWER CONDUCTORS & CABLES ..... 26 05 19-1 thru 26 05 19-8
Section 26 05 26 ..... GROUNDING AND BONDING FOR ELECTRICAL SYSTEMS ..... 26 05 26-1 thru 26 05 26-9
Section 26 05 29 ..... HANGERS AND SUPPORTS FOR ELECTRICAL SYSTEMS ..... 26 05 29-1 thru 26 05 29-9
Section 26 05 33 ..... RACEWAYS AND BOXES FOR ELECTRICAL SYSTEMS ..... 26 05 33-1 thru 26 05 33-10
Section 26 05 34 ..... EQUIPMENT WIRING CONNECTIONS ..... 26 05 34-1 thru 26 05 34-5
Section 26 05 53 ..... IDENTIFICATION FOR ELECTRICAL SYSTEMS ..... 26 05 53-1 thru 26 05 53-3
Section 26 22 00 ..... LOW VOLTAGE TRANSFORMERS ..... 26 22 00-1 thru 26 22 00-5
Section 26 24 13 ..... SWITCHBOARDS ..... 26 24 13-1 thru 26 24 13-13
Section 26 24 16 ..... PANELBOARDS ..... 26 24 16-1 thru 26 24 16-6
Section 26 27 26 ..... WIRING DEVICES ..... 26 27 26-1 thru 26 27 26-6
Section 26 28 19 ..... ENCLOSED SWITCHES AND MOTOR STARTERS ..... 26 28 19-1 thru 26 28 19-7
Section 26 41 00 ..... LIGHTNING PROTECTION SYSTEM ..... 26 41 00-1 thru 26 41 00-4
Section 26 43 00 ..... SURGE PROTECTIVE DEVICES (SPDs) ..... 26 43 00-1 thru 26 43 00-4
Section 26 51 00 ..... INTERIOR LIGHTING ..... 26 51 00-1 thru 26 51 00-8
Section 26 51 01 ..... DIGITAL NETWORK LIGHTING CONTROL SYSTEMS ..... 26 51 01-1 thru 26 51 01-8

NOTICE TO BIDDERS
CITY OF TAMPA, FLORIDA

Contract 14-C-00049; Wayne C. Papy Center Addition and Renovation

Sealed Proposals will be received by the City of Tampa no later than 1:30 P.M., July 21, 2015 in the 4th Floor Conference Room, Tampa Municipal Office Building, 306 E. Jackson Street, Tampa, Florida, there to be publicly opened and read aloud.

The proposed work is to include, but not be limited to, construction of a 1,000 sf lobby addition with a steel frame superstructure, curtain wall exterior finish, standing seam metal and modified bitumen roofs, HVAC system, interior metal stud framing, drywall, finishes, painting, plumbing, electrical with all associated work required for a complete project in accordance with the Contract Documents.

The Instructions to Bidders, Proposal, Form of Bid Bond, Agreement, Form of Public Construction Bond, Specifications, Plans and other Contract Documents are posted at DemandStar.com. Backup files may be downloaded from http://www.tampagov.net/contract-administration/programs/construction-project-bidding. One set may be available for reference at the office of the Contract Administration Department, Municipal Office Building, Fourth Floor North, City Hall Plaza, Tampa, Florida 33602.

Each Proposal must be submitted on the Proposal form included in the Specifications and must be accompanied by a certified check or cashier's check on a solvent bank or trust company in compliance with Section 255.051, Florida Statutes, made payable to the City of Tampa, in an amount of not less than five per cent of the total bid, or a Bid Bond, of like amount, on the form set forth in the Contract Documents, as a guarantee that, if the Proposal is accepted, the Bidder will execute the Proposed Contract and furnish a Public Construction Bond within twenty (20) days after receipt of Notice of Award of Contract.

The City of Tampa reserves the right to reject any or all Bids and to waive any informalities in the Bid and/or Bid Bond. Acceptance or rejection of Proposals will be made as soon as practicable after the Proposals are received, but the City reserves the right to hold Proposals for ninety (90) days from the date of Opening.

Bid Protest Procedures: Unless subsequently indicated otherwise, in a revised posting on the Department's web page for Construction Project Bidding, the City of Tampa intends to award the referenced project to the lowest bidder listed in the tabulation posted on or about the date of Bid Opening. A bidder aggrieved by this decision may file a protest not later than 4:30 P.M., five (5) business days from the first posting thereof, pursuant to City of Tampa Code Chapter 2, Article V, Division 3, Section 2-282, Procurement Protest Procedures. Protests not conforming therewith shall not be reviewed.

Communication with City Staff

Pursuant to City of Tampa Ordinance 2010-92, during the solicitation period, including any protest and/or appeal, NO CONTACT initiated by bidders or responders with City officers or employees, other than the individuals specified below is permitted:
Director of Contract Administration, David Vaughn
Contracts Management Supervisor, Jim Greiner
Contract Officer, Jody Gray
The City's Legal Department staff
The City's Contract Administration Department staff.
Technical Questions and Requests For Information should be directed to the Department via
ContractAdministration@tampagov.net

"A person or affiliate who has been placed on the convicted vendor list following a conviction for a public entity crime may not submit a bid on a contract to provide any goods or services to a public entity, may not submit a bid on a contract with a public entity for the construction or repair of a public building or public work, may not submit bids on leases of real property to a public entity, may not be awarded or perform work as a contractor, supplier, subcontractor, or consultant under a contract with any public entity, and may not transact business with any public entity in excess of the threshold amount provided in Section 287.017, for CATEGORY TWO for a period of 36 months from the date of being placed on the convicted vendor list." Refer to Section 287.133 Florida Statues.

In accordance with the City of Tampa's Equal Business Opportunity Ordinance, a Goal may have been established for subcontracting with Small Local Business Enterprises, SLBEs, certified by the City. Links to further information and a list of SLBEs are on the Department's Construction Project Bidding Web page. A link to the current complete directory of SLBEs is on the Minority Business Development Office Website.

INSTRUCTIONS TO BIDDERS
SECTION 1 - SPECIAL INSTRUCTIONS

I-1.01 GENERAL:

The proposed work is the Wayne C. Papy Center Addition and Renovation in the City of Tampa, as required for a complete project, as shown on the plans and detailed in the specifications. The work is located on land owned or controlled by the City of Tampa.

I-1.02 FORM PREPARATION AND PRESENTATION OF PROPOSALS: Replace the second sentence with the following: Submission of the entire specification book is not required.

I-1.03 ADDENDA – Section I-2.03 is replaced with the following: No interpretation of the meaning of the Plans, Specifications, or other Contract Documents will be made to any Bidder orally.

Every request for such interpretation must be in writing, addressed to the City of Tampa, Contract Administration Department, 306 E. Jackson St., 4th Floor, Tampa, Florida 33602 and then emailed to ContractAdministration@tampagov.net. To be given consideration, such request must be received at least seven (7) days prior to the date fixed for the opening of the Proposals. Any and all such interpretations and any supplemental instructions will be in the form of written addenda which, if issued, will be posted on DemandStar.Com and on the Department's web page, with notice given to all prospective bidders at the respective fax numbers or e-mail addresses furnished, for such purposes. Failure of any Bidder to receive any such addenda shall not relieve said Bidder from any obligation under his Proposal as submitted. All addenda so issued shall become part of the Contract Documents.

I-1.04 SIGNATURE OF BIDDERS: Section I-2.07 is replaced with the following:

Proposals must be signed in ink by the Bidder with signature in full. When firm is a Bidder, the Proposal shall be signed in the name of the firm by one or more partners. When a corporation is a bidder the officer signing shall set out the corporate name in full beneath which he shall sign his name and give the title of his office. The Proposal shall also bear the seal of the corporation attested by its secretary.

If the bidder referred to in Section I-2.07 is a corporation, it must submit; upon request, a copy of its filed Articles of Incorporation. In addition, if the bidder was incorporated in another state, it must establish that it is authorized to do business in the State of Florida. If the bidder is using a fictitious name, it must submit upon request, proof of registration of such name with the Clerk of the Circuit Court of the Country where its principal place of business is. Failure to submit what is required is grounds to reject the bid of that bidder.

I-1.05 TIME FOR COMPLETION:

The work shall be arranged to be completed in accordance with a progress schedule approved by the Construction Engineer.

The time for completion of this project, referred in Article 4.01 of the Agreement, shall be 180 consecutive calendar days. The period for performance shall start from the date indicated in the Notice To Proceed.

I-1.06 LIQUIDATED DAMAGES:

The amount of liquidated damages, referred to in Article 4.06 of the Agreement, for completion of this project shall be $500.00 per calendar day.

I-1.07 BASIS OF AWARD OF CONTRACT:

The basis of award referred to in Item I-2.11 of Instructions to Bidders shall be the greatest amount of work, which can be accomplished within the funds available as budgeted. The award may be made on the basis of the total bid, base bid, alternates(s) if any, unit bids if any, or any combination thereof deemed to be in the best interest of the City.

INSTRUCTIONS TO BIDDERS
SECTION 1 - SPECIAL INSTRUCTIONS

Unless all bids are rejected, the award will be made within 90 days after opening proposals.

I-1.08 GROUND BREAKING CEREMONY:

Arrangement may be made by the City in coordination with the Contractor, for construction to commence with a Ground Breaking Ceremony. Details will be discussed at the pre-construction conference.

I-1.09 INSURANCE:

The insurance required for this project shall be as indicated on Pages beginning with INS-1. Before commencing work, the Contractor shall provide the evidence of the insurance required on a Certificate of Insurance accompanied by evidence of authority to bind the insurance company or companies such as agents license, power of attorney, or letter of authority.

I-1.10 EQUAL BUSINESS OPPORTUNITY PROGRAM / SLBE / REQUIREMENTS

In accordance with the City of Tampa's Equal Business Opportunity Program, a goal of 24.8% has been established for subcontracting with Small Local Business Enterprises, (SLBEs), certified by the City. The goal is based upon the availability of the firms listed on the Goal Worksheet and as posted in the "SLBEs" link under this Contract's notice on the Department's Construction Project Bidding web page.

BIDDERS MUST SOLICIT ALL SLBEs ON THAT LIST and provide documentation of emails, faxes, phone calls, letters, or other communication with the firms as a first step to demonstrate Good Faith Efforts to achieve the goal. The list is formatted to facilitate e-mail solicitations to the listed firms by copying and pasting e-mail addresses.

Bidders may explore other opportunities for subcontracting with SLBEs by consulting the current directory of all certified SLBEs posted on the Minority Business Development Office web page.

GOOD FAITH EFFORT COMPLIANCE PLAN REQUIRED - When a Goal has been established, the Bidder must submit, with its bid, completed to the fullest extent possible, a Good Faith Effort Compliance Plan using the form GFECP contained herein. Additional documentation is required whenever an SLBE subcontractor's low quote is not utilized. Supplemental information or documentation concerning the Bidder's Compliance Plan may be required prior to award as requested by the City.

DIVERSITY MANAGEMENT INITIATIVE, DMI, DATA REPORTING FORMS REQUIRED - Bidders must submit, with its bid, "DMI-Solicited" forms listing all subcontractors solicited and "DMI-Utilized" forms listing all subcontractors to be utilized. Supplemental forms, documentation, or information may be submitted at bid time or as requested by the City.

After an award, "DMI-Payments" forms are to be submitted with payment requests to report payments to subcontractors.

Bidders may visit the Minority Business Development Office's web page at TampaGov.net for other information about the SLBE program, FAQ's, and the latest SLBE directory of certified firms.

I-1.11 BID SECURITY:

Surety companies shall have a rating of not less than B+ Class VI as evaluated in the most recently circulated Best Key rating Guide Property-Liability.

INSTRUCTIONS TO BIDDERS
SECTION 1 - SPECIAL INSTRUCTIONS

I-1.12 PUBLIC CONSTRUCTION BOND:

The Bidder who is awarded the Contract will be required to furnish a Public Construction Bond upon the form provided herein, equal to 100 percent of the Contract price, such Bond to be issued and executed by (a) surety company(ies) acceptable to the City of Tampa and licensed to underwrite contracts in the State of Florida. After execution of the Agreement and before commencing work, the Contractor must provide the City a certified copy of the officially recorded Bond.

I-1.13 AGREEMENT
Section 2 – Powers of the City's Representatives
Add the following:
Article 2.05 CITY'S TERMINATION FOR CONVENIENCE:

The City may, at any time, terminate the Contract in whole or in part for the City's convenience and without cause. Termination by the City under this Paragraph shall be by a notice of termination delivered to the Contractor, specify the extent of termination and the effective date.

Upon receipt of a notice of termination, the Contractor shall immediately, in accordance with instructions from the City, proceed with performance of the following duties regardless of delay in determining or adjusting amounts due under this Paragraph:

(a) cease operations as specified in the notice;
(b) place no further orders and enter into no further subcontracts for materials, labor, services or facilities except as necessary to complete continued portions of the Contract;
(c) terminate all subcontracts and orders to the extent they relate to the Work terminated;
(d) proceed to complete the performance of Work not terminated; and
(e) take actions that may be necessary, or that the City may direct, for the protection and preservation of the terminated Work.

The amount to be paid to the Contract by the City because of the termination shall consist of:

(a) for costs related to work performed on the terminated portion of the Work prior to the effective date including termination costs relative to subcontracts that are properly chargeable to the terminated portion of the Work.
(b) the reasonable costs of settlement of the Work terminated, including accounting, legal, clerical and other expenses reasonable necessary for the preparation of termination settlement proposals and supporting data; additional costs of termination and settlement of subcontracts excluding amounts of such settlements; and storage, transportation, and other costs incurred which are reasonably necessary for the preservation, protection or disposition of the terminated Work; and
(c) a fair and reasonable profit on the completed Work unless the Contractor would have sustained a loss on the entire Contract had it been completed.

Allowance shall be made for payments previously made to the Contractor for the terminated portion of the Work, and claims which the City has against the Contractor under the Contract, and for the value of materials supplies, equipment or other items that are part of the costs of the Work to be disposed of by the Contractor.

I-1.14 Section 5 – subcontracts and Assignments, Article 5.01, Page A-7, Last Paragraph:
Change "…twenty-five (25) percent… "to fifty-one (51) percent…"

Section 10-Payments, Article .05 Partial Payments, 1st Paragraph, 1st Sentence:
Change "…fair value of the work done, and may apply for…" to "…fair value of the work done, and shall apply for…"

INSTRUCTIONS TO BIDDERS
SECTION 1 - SPECIAL INSTRUCTIONS

I-1.15 Contractors must utilize the U.S. Department of Homeland Security's E-Verify Systems to verify the employment eligibility of all persons employed during the term of the contract to perform employment duties within the State of Florida and all persons, including subcontractors, assigned by the contractor to perform work pursuant to the contract.

I-1.16 GENERAL PROVISIONS; G-2.02 Copies Furnished to Contractor: Replace the first paragraph with the following:

The Contractor shall acquire for its use copies of the plans and specifications as needed. The documents may be downloaded from the City's web site, at
http://www.tampagov.net/dept_contract_administration/programs_and_services/construction_project_bidding/index.asp

I-1.17 PAYMENT DISPUTE RESOLUTION

Any dispute pertaining to pay requests must be presented to the City pursuant to Executive Order 2003-1.

I-1.18 SCRUTINIZED COMPANIES.

For Contracts $1,000,000 and greater, if the City determines the Contractor submitted a false certification under Section 287.135(5) of the Florida Statutes, or if the Contractor has been placed on the Scrutinized Companies with Activities in the Sudan List or the Scrutinized Companies with Activities in the Iran Petroleum Energy Sector List, the City shall either terminate the Contract after it has given the Contractor notice and an opportunity to demonstrate the City's determination of false certification was in error pursuant to Section 287.135(5)(a) of the Florida Statutes, or maintain the Contract if the conditions of Section 287.135(4) of the Florida Statutes are met.

I-1.19 FLORIDA'S PUBLIC RECORDS LAW

4.33.3 The City of Tampa is a public agency subject to Chapter 119, Florida Statutes. In accordance with Florida Statutes, 119.0701, if applicable, Contractor shall comply with Florida's Public Records Law. Specifically, the Contractor shall:

1. Keep and maintain public records that ordinarily and necessarily would be required by the City in order to perform the service;

2. Provide the public with access to such public records on the same terms and conditions that the City would provide the records and at a cost that does not exceed that provided in Chapter 119, Florida Statutes, or as otherwise provided by law;

3. Ensure that public records that are exempt or that are confidential and exempt from public record requirements are not disclosed except as authorized by law;

4. Meet all requirements for retaining public records and transfer to the City, at no cost, all public records in possession of the contractor upon termination of the contract and destroy any duplicate public records that are exempt or confidential and exempt. All records stored electronically must be provided to the City in a format that is compatible with the information technology systems of the agency.

4.33.4 The failure of Contractor to comply with the provisions set forth in this Article shall constitute a Default and Breach of this award and the City shall enforce the Default in accordance with the provisions set forth in the DEFAULT/RE-AWARD section of this document.

SECTION 2
GENERAL INSTRUCTIONS

I-2.01 BIDDER'S RESPONSIBILITY
Before submitting Proposals, Bidders shall carefully examine the entire site of the proposed work and adjacent premises and the various means of approach and access to the site, and make all necessary investigations to inform themselves thoroughly as to the facilities necessary for delivering, placing and operating the necessary construction equipment, and for delivering and handling materials at the site, and inform themselves thoroughly as to all difficulties involved in the completion of all the work in accordance with the Contract Documents.

Bidders must examine the Plans, Specifications, and other Contract Documents and shall exercise their own judgment as to the nature and amount of the whole of the work to be done, and for the bid prices must assume all risk of variance, by whomsoever made, in any computation or statement of amounts or quantities necessary to complete the work in strict compliance with the Contract Documents.

Elevations of the ground are shown on the Plans and are believed to be reasonably correct, but are not guaranteed to be absolutely so and are presented only as an approximation. Bidders shall satisfy themselves as to the correctness of all elevations.

The City may have acquired, for its own use, certain information relating to the character of materials, earth formations, probable profiles of the ground, conditions below ground, and water surfaces to be encountered at the site of the proposed work. This information, if it exists, is on file at the offices of the Department of Public Works and Bidders will be permitted to see and examine this information for whatever value they consider it worth. However, this information is not guaranteed, and Bidders should satisfy themselves by making borings or test pits, or by such other methods as they may prefer, as to the character, location, and amounts of water, peat, clay, sand, quicksand, gravel, boulders, conglomerate, rock, gas or other material to be encountered or work to be performed.

Various underground and overhead structures and utilities are shown on the plans. The location and dimensions of such structures and utilities, where given, are believed to be reasonably correct, but do not purport to be absolutely so. These structures and utilities are plotted on the Plans for the information of the Bidders, but information so given is not to be construed as a representation or assurance that such structures will be found or encountered as plotted, or that such information is complete or accurate.

I-2.02 FORM, PREPARATION AND PRESENTATION OF PROPOSALS
Each Proposal shall be submitted upon the Proposal Form and in accordance with the instructions included herein. The Proposal Form must not be detached herefrom. All blank spaces for bid prices must be filled in, in both words and figures, with the unit or lump sum prices, or both, for which the Proposal is made. The computed total price for each unit price Contract Item shall be determined by multiplying the estimated quantity of the item, as set forth in the Proposal Form, by the corresponding unit price bid for such item. The resulting product shall be entered in the appropriate blank space under the column headed "Computed Total Price for Item". The lump sum price bid for each lump sum price Contract Item shall also be entered in the column headed "Computed Total Price for Item". If a Proposal contains any omissions, erasures, alterations, additions, or items not called for in the itemized Proposal, or contains irregularities of any kind, such may constitute sufficient cause for rejection of the Proposal. In case of any discrepancy in the unit price or amount bid for any item in the Proposal, the price as expressed in written words will govern. In no case is the Agreement Form to be filled out or signed by the Bidder.

In the case of certain jobs bid Lump Sum a "Schedule of Unit Prices" must be filled out as an attachment to the Lump Sum proposal. These prices may be used as a guide for the negotiation of change orders, at the City's option.

The proposal must be signed and certified and be presented on the prescribed form in a sealed envelope on/or before the time and at the place stated in the Notice of Bidders, endorsed with the name of the person, firm or corporation presenting it, the date of presentation, and the title of the work for which the Proposal is made.

Unless the apparent low bidder is now engaged in or has recently completed contract work for the City of Tampa, he, if requested, shall furnish to the City, after the opening of bids and prior to award, a summary statement of record of construction experience over the past three (3) years with proper supporting evidence, and, if required by the City, shall also furnish a list of equipment and other facilities pertinent to and available for the proper execution of the proposed work, and a statement of financial resources to the extent necessary to establish ability to carry on the proposed work. The City may make further investigations as considered necessary with respect to responsibility of the Bidder to whom it appears may be awarded the Contract.

If forwarded by mail, the sealed envelope containing the Proposal, endorsed as directed above, must be enclosed in another envelope addressed as specified in the Notice to Bidders and sent by registered mail.

I-2.03 ADDENDA AND INTERPRETATIONS
No interpretation of the meaning of the Plans, Specifications, or other Contract Documents will be made to any Bidder orally.

Every request for such interpretation must be in writing, addressed to the Contract Administration Department, Tampa Municipal Office Building, 4th Floor North, City Hall Plaza, Tampa, Florida 33602. To be given consideration, such request must be received at least seven (7) days prior to the date fixed for the opening of the Proposals. Any and all such interpretations and any supplemental instructions will be in the form of written addenda which, if issued, will be sent by certified mail, with return receipt requested, to all prospective bidders at the respective addresses furnished, for such purposes, not later than three (3) working days prior to the date fixed for the opening of the Proposals, and if requested, a copy will be delivered to the prospective bidder's representative. Failure of any Bidder to receive any such addenda shall not relieve said Bidder from any obligation under his Proposal as submitted. All addenda so issued shall become part of the Contract Documents.

I-2.04 BID SECURITY
Each Proposal must be accompanied by a certified or cashier's check issued by a solvent bank or trust company and payable at sight to the City of Tampa, in compliance with Section 255.051 Florida Statutes, or a Bid Bond upon the form provided herein, in an amount of not less than five percent of the sum of the computed total amount of the Bidder's Proposal as a guarantee that if the Proposal is accepted, the Bidder will execute and fill in the proposed Contract and Public Construction Bond within twenty (20) days after notice of award of the Contract. Certified checks shall have all necessary documentary revenue stamps attached if required by law. Surety on Bid Bonds shall be a duly authorized surety company authorized to do business in the State of Florida, and all such Bonds shall be issued or countersigned by a local resident producing agent, and satisfactory evidence of the authority of the person or persons executing such Bond to Execute the same shall be submitted with the Bond. Bid Bonds shall be issued by a surety company acceptable to the City.

Within ten (10) days after the opening of Proposals, the bid security of all but the three lowest Bidders will be returned. The bid security of the remaining two Bidders whose Proposals are not accepted will be

returned within ten (10) days after the execution of the Contract, or, if no such Contract has been executed, within ninety (90) days after the date of opening Proposals. The bid security of the Bidder whose Proposal is accepted will be returned only after he has duly executed the Contract and furnished the required Public Construction Bond and insurance.

Should it be necessary for the City to retain the bid security and said bid security is in the form of checks, the checks of these Bidders will be returned if replaced by Bid Bonds in an amount equal to the amount of the checks of such Bidders in such form and issued by a surety company acceptable to the City.

A Bidder may withdraw his Proposal before the time fixed for the opening of Proposals, without prejudice to himself, by communicating his purpose, in writing, to the Mayor and City Council, and when his communication is received, the Proposal will be handed to him or his authorized agent unopened. No Bidder may withdraw his Proposal within ninety (90) days after the day of opening Proposals.

The Bidder whose Proposal is accepted shall enter into a written contract, upon the Agreement form included herein, for the performance of the work and furnish the required Public Construction Bond within twenty (20) days after written notice by the City of Award of Contract has been served on such Bidder personally or after receipt of the written notice by registered mail to such Bidder at the address given in his Proposal.

If the Bidder to whom a Contract is awarded refuses or neglects to execute it or fails to furnish the required Public Construction Bond within twenty (20) days after receipt by him of the Notice of Award of Contract, the amount of his bid security shall be forfeited and shall be retained by the City as liquidated damages, and not as a penalty, it being now agreed that said sum is a fair estimate of the amount of damages that the City will sustain in case said Bidder fails to enter into a Contract and furnish the required Public Construction Bond. If a Bid Bond was furnished, the full amount of the Bond shall become due and payable as liquidated damages caused by such failure. The full amount of the bid security shall be forfeited as liquidated damages without consideration of the fact that an award may be less than the full amount of the Bidder's Proposal, excepting that the award shall be within the conditions of said Proposal relating to the basis of consideration for an award. No plea of mistake in the bid or misunderstanding of the conditions of forfeiture shall be available to the Bidder for the recovery of his deposit or as a defense to any action based upon the neglect or refusal to execute a contract.

I-2.05 LAWS AND REGULATIONS
The Bidder who is awarded the Contract must comply with all laws of the State of Florida, and all applicable Ordinances of the City of Tampa respecting labor and compensation and with all other statutes, ordinances, rules and regulations applicable and having the force of law.

I-2.06 PUBLIC CONSTRUCTION BOND
The Bidder who is awarded the Contract will be required to furnish a Public Construction Bond upon the form provided herein, equal to 100 percent of the Contract price, such Bond to be executed by a surety company acceptable to the City of Tampa and licensed to underwrite contracts in the State of Florida. Surety companies shall have a rating of not less than: B+ Class VI as evaluated in the most recently circulated BEST'S KEY RATING GUIDE PROPERTY-LIABILITY.

I-2.07 SIGNATURE AND QUALIFICATIONS OF BIDDERS
Proposals must be signed in ink by the Bidder with signature in full. When a firm is a Bidder, the Proposal shall be signed in the name of the firm by one or more of the partners. When a corporation is a Bidder the officer signing shall set out the corporate name in full beneath which he shall sign his name and give the title of his office. The Proposal shall also bear the seal of the corporation attested by its secretary. Anyone signing the Proposal as agent must file with it legal evidence of his authority to do so.

Bidders who are nonresident corporations shall furnish to the City a duly certified copy of their permit to transact business in the State of Florida, signed by the Secretary of State, within ten days of the notice to do so. Such notice will be given to Bidders who are nonresident corporations, to whom it appears an award will be made, and the copy of the permit must be filed with the City before the award will be made. Failure to promptly submit this evidence of qualification to do business in the State of Florida may be basis for rejection of the Proposal.

I-2.08 REJECTION OF PROPOSALS
The City reserves the right to reject any Proposal if investigation of the Bidder fails to satisfy the City that such Bidder is properly qualified to carry out the obligations and to complete the work contemplated therein. Any or all Proposals will be rejected if there is reason to believe that collusion exists among Bidders. Proposals will be considered irregular and may be rejected if they show serious omissions, alterations in form, additions not called for, conditions or unauthorized alternates, or irregularities of any kind. The City reserves the right to reject any or all Proposals and to waive such technical errors as may be deemed best for the interests of the City.

I-2.09 QUANTITIES ESTIMATED ONLY
The estimate of quantities of the various items of work and materials, if set forth in the Proposal Form, is approximate only and is given solely to be used as a uniform basis for the comparison of Proposals. The quantities actually required to complete the Contract work may be less or more than so estimated, and if awarded a Contract for the work specified, the Contractor agrees that he will not make any claim for damages or for loss of profits because of a difference between the quantities of the various classes of work assumed for comparison of Proposals and quantities of work actually performed. The City further reserves the right to vary the quantities in any amount.

I-2.10 COMPARISON OF PROPOSALS
Except jobs bid on a "One Lump Sum" basis, proposals will be compared on the basis of a total computed price arrived at by taking the sum of the estimated quantity of each time and the corresponding unit price of each item, and including any lump sum prices on individual items.

The computed total prices for individual Contract Items and the total computed price for the entire Contract, as entered by the Bidder in the Proposal Form, are for convenience only and are subject to correction in the tabulation and computation of the Proposals.

I-2.11 BASIS OF AWARD
The Contract will be awarded, if at all, to the lowest responsible Bidder or Bidders, as determined by the City and by the terms and conditions of the Contract Documents. Unless all bids are rejected, the award will be made within ninety (90) days after the opening of Proposals. The successful Bidder will be required to possess, or obtain, a valid City Occupational License.

I-2.12 INSURANCE REQUIRED
The successful Bidder and his subcontractors will be required to procure and pay for insurance covering the work in accordance with the provisions of Article 6.02 of the Agreement as indicated on special instructions pages beginning with INS-1.

I-2.13 NO ASSIGNMENT OF BID
No Bidder shall assign his bid or any rights thereunder.

I-2.14 NONDISCRIMINATION IN EMPLOYMENT
Contracts for work under this Proposal will obligate the contractors and subcontractors not to discriminate in employment practices.

Bidders must, if requested, submit with their initial bid a signed statement as to whether they have previously performed work subject to the President's Executive Order Nos. 11246 and 11375.
Bidders must, if requested, submit a compliance report concerning their employment practices and policies in order to maintain their eligibility to receive the award of the Contract.

Successful Bidders must, if requested, submit a list of all subcontractors who will perform work on the project and written,

signed statement from authorized agents of the labor pools with which they will or may deal for employees on the work together with supporting information to the effect that said labor pools practices and policies are in conformity with Executive Order No. 11246 and that said labor pools will affirmatively cooperate in or offer no hindrance to the recruitment, employment and equal treatment of employees seeking employment and performing work under the Contract, or a certification as to what efforts have been made to secure such statements when such agents or labor pools have failed or refused to furnish them prior to the award of the Contract.

I-2.15 LABOR STANDARDS
The Bidder's attention is directed to the Contract Provisions of the Labor Standards for federally assisted projects which may be attached to and made a part of the Agreement.

I-2.16 NOTICE TO LABOR UNIONS
If applicable, the successful Bidder will be required to provide Labor Unions and other organizations of workers a completed copy of the form entitled "Notice to Labor Unions or Other Organizations of Workers", and such form may be made a part of the Agreement.

I-2.17 NOTICE TO PROSPECTIVE FEDERALLY-ASSISTED CONSTRUCTION CONTRACTORS
A Certification of Nonsegregated Facilities, as required by the May 9, 1967, Order (32 F.R. 7439, May 19, 1967) on Elimination of Segregated Facilities, by the Secretary of Labor, must be submitted to said Secretary prior to the award of a federally-assisted construction and Contract exceeding $10,000 which is not exempt from the provisions of the Equal Opportunity Clause. The form of certification may be bound herein following the form of Bid Bond.

Contractors receiving federally-assisted construction Contract awards exceeding $10,000 which are not exempt from the provisions of the Equal Opportunity Clause will be required to provide for the forwarding of the following notice to prospective subcontractor for supplies and construction contracts where the subcontracts exceed $10,000 and are not exempt from the provisions of the Equal Opportunity Clause:

NOTICE TO PROSPECTIVE SUBCONTRACTORS OF REQUIREMENT
FOR CERTIFICATIONS OF NONSEGREGATED FACILITIES

"A Certification of Nonsegregated Facilities, as required by the May 9, 1967, Order (32 F.R. 7439, May 19, 1967) on Elimination of Segregated Facilities, by the Secretary of Labor, must be submitted prior to the award of a subcontract exceeding $10,000 which is not exempt from the provisions of the Equal Opportunity Clause."

"Contractors receiving subcontract awards exceeding $10,000 which are not exempt from the provisions of the Equal Opportunity Clause will be required to provide from the forwarding of this notice to prospective subcontractors for supplies and construction contracts where the subcontracts exceed $10,000 and are not exempt from the provisions of the Equal Opportunity Clause."

The United States requires a pre-award conference if a proposed construction contract exceeds one million dollars to determine if the the prospective contractor is in compliance with the Equal Employment Opportunity requirements of Executive Order 11246 of September 24, 1965. In such instances, a meeting may be scheduled at which the prospective contractor must specify what affirmative action he has taken or proposed to take to assure equal employment opportunity which must be approved by the United States before award of the contract will be authorized.

Bidders must be prepared to submit an Equal Employment Opportunity (EEO) plan at a pre-award conference. The plan must include bidding opportunities offered by the Bidder to minority subcontractors.

On October 13, 1971, President Nixon issued Executive Order 11246 emphasizing the government's commitment to the promotion of minority business enterprise. Accordingly, the United States is firmly committed to the utilization of available resources to support this important program. U.S. agencies are most interested in realizing minority participation on the subject. Achieving equal employment opportunity compliance is required through Executive Order 11246. WE cannot emphasize too strongly that minority subcontractors be extended subcontractors bidding opportunities as but one step in your affirmative action policy.

Due to the importance of this contract, U.S. Agencies may conduct an EEO Conference prior to the award of the Contract. It is suggested that the responsive Bidder confirm the minority subcontractors he contacted for bids or quotations in his EEO plan submitted at the conference.

I-2.18 EEO AFFIRMATIVE ACTION REQUIREMENTS
By the submission of a Proposal, each Bidder acknowledges that he understands and will agree to be bound by the equal opportunity requirements of Federal regulations which shall be applicable throughout the performance of work under any contract awarded pursuant to solicitation. Each Bidder agrees that if awarded a contract, he will similarly bind contractually each subcontractor. In policies, each Bidder further understands and agrees that if awarded a contract, he must engage in Affirmative Action directed to promoting and ensuring equal employment opportunity in the work force used under the contract (and he must require contractually the same effort of all subcontractors whose subcontracts exceed $100,000). The Bidder understands and agrees that "Affirmative Action" as used herein shall constitute a good faith effort to achieve and maintain minority employment in each trade in the on-site work force used on the project. * * * * * * * END of SECTION * * * * * * *

CITY OF TAMPA INSURANCE REQUIREMENTS

During the life of the award/contract the Awardee/Contractor shall provide, pay for, and maintain insurance with companies authorized to do business in Florida, with an A.M. Best rating of B+ (or better) Class VII (or higher), or otherwise be acceptable to the City if not rated by A.M. Best. All insurance shall be from responsible companies duly authorized to do business in the State of Florida.

All commercial general liability insurance policies (and Excess or Umbrella Liability Insurance policies, if applicable) shall provide that the City is an additional insured as to the operations of the Awardee/Contractor under the award/contract including the additional insured endorsement, the subrogation wavier endorsement, and the Severability of Interest Provision. In lieu of the additional named insured requirement, if the Awardee/Contractor's company has a declared existing policy which precludes it from including additional insureds, the City may permit the Contractor to purchase an Owners and Contractors Protective Liability policy. Such policy shall be written in the name of the City at the same limit as is required for General Liability coverage. The policy shall be evidenced on an insurance binder which must be effective from the date of issue until such time as a policy is in existence and shall be submitted to the City in the manner described below as applicable to certificates of insurance.

The insurance coverages and limits required must be evidenced by a properly executed Acord 25 Certificate of Insurance form or its equivalent. Each Certificate must be personally manually signed by the Authorized Representative of the insurance company shown in the Certificate with proof that he/she is an authorized representative thereof. Thirty days' written notice must be given to the City of any cancellation, intent not to renew, or reduction in the policy coverages, except in the application of the aggregate liability limits provisions. Should any aggregate limit of liability coverage be reduced, it shall be immediately increased back to the limit required by the contract. The insurance coverages required herein are to be primary to any insurance carried by the City or any self-insurance program thereof.

The following coverages are required:

A. Commercial General Liability Insurance shall be provided on the most current Insurance Services Office (ISO) form or its equivalent. This coverage must be provided to cover liability arising from premises and operations, independent contractors, products and completed operations, personal and advertising injury, contractual liability, and XCU exposures (if applicable). Completed operations liability coverage shall be maintained for a minimum of one-year following completion of work. The amount of Commercial General Liability insurance shall not be less than the amount specified.

(a) $1,000,000 per occurrence and a $2,000,000 general aggregate for projects valued at $2,000,000 or less. General aggregate limit for projects over that price shall equal or exceed the price of the project. An Excess or Umbrella Liability insurance policy can be provided to meet the required limit. Risk Management may be contacted for additional information regarding projects of this nature.

B. Automobile Liability Insurance shall be maintained in accordance with the laws of the State of Florida, as to the ownership, maintenance, and use of all owned, non-owned, leased, or hired vehicles. The amount of Automobile Liability Insurance shall not be less than the amount specified.

(a) $500,000 combined single limit each occurrence bodily injury & property damage- for projects valued at $100,000 and under

(b) $1,000,000 combined single limit each occurrence bodily injury & property damage – for projects valued over $100,000

C. Worker's Compensation and Employer's Liability Insurance shall be provided for all employees engaged in the work under the contract, in accordance with the Florida Statutory Requirements. The amount of the Employer's Liability Insurance shall not be less than:

(a) $500,000 bodily injury by accident and each accident, bodily injury by disease policy limit, and bodily injury by disease each employee – for projects valued at $100,00 and under
(b) $1,000,000 bodily injury by accident and each accident, bodily injury by disease policy limit, and bodily injury by disease each –for projects valued over $100,000

D. Excess Liability Insurance or Umbrella Liability Insurance may compensate for a deficiency in general liability, automobile, or worker's compensation insurance coverage limits. If the Excess or Umbrella policy is being provided as proof of coverage, it must name the City of Tampa as an additional insured **(IF APPLICABLE).**

E. Builder's Risk Insurance, specialized policy designed to cover the property loss exposures that are associated with construction of buildings. The amount of coverage should not be less than the amount of the project. **(IF APPLICABLE).**

F. Installation Floater- a builder's risk type policy that covers specific type of property during its installation, is coverage required for highly valued equipment or materials such as compressors, generators, or other machinery that are not covered by the builder's risk policy **(IF APPLICABLE).**

G. Longshoreman's & Harbor Worker's Compensation Act/Jones Act coverage shall be maintained for work being conducted upon navigable water of the United States. The limit required shall be the same limit as the worker's compensation/employer's liability insurance limit **(IF APPLICABLE).**

H. Professional Liability shall be maintained against claims of negligence, errors, mistakes, or omissions in the performance of the services to be performed and furnished by the Awardee/Contractor or any of its subcontractors when it acts as a DESIGN PROFESSIONAL. The amount of coverage shall be no less than amount specified **(IF APPLICABLE).**

(a) $1,000,000 per incident and general aggregate. Note all claims made policies must provide the date of retroactive coverage.

The City may waive any or all of the above referenced insurance requirements based on the specific nature of goods or services to be provided under the award/contract.

ADDITIONAL INSURED - The City must be included as an additional insured by on the general and (Excess or Umbrella liability policies) if applicable. Alternatively, the Contractor may purchase a separate owners protective liability policy in the name of the City in the specified amount as indicated in the insurance requirements.

CLAIMS MADE POLICIES - If any liability insurance is issued on a claims made form, Contractor agrees to maintain uninterrupted coverage for a minimum of one year following completion and acceptance of the work either through purchase of an extended reporting provision, or through purchase of successive renewals with a retroactive date not later than the beginning of performance of work for the City. The retroactive date must be provided for all claims made policies.

CANCELLATION/NON-RENEWAL - Thirty (30) days written notice must be given to the City of any cancellation, intent to non-renew or material reduction in coverages (except aggregate liability limits). However, ten (10) days notice may be given for non-payment of premium. Notice shall be sent to the City of Tampa Department of Public Works, 306 E. Jackson Street, Tampa, FL 33602.

NUMBER OF POLICIES - General and other liability insurance may be arranged under single policies for the full amounts required or by a combination of underlying policies with the balance provided by an excess or umbrella liability insurance policy.

WAIVER OF SUBROGATION - Contractor waives all rights against City, its agents, officers, directors and employees for recovery of damages to the extent such damage is covered under the automobile or excess liability policies.

SUBCONTRACTORS - It is the Contractor's responsibility to require all subcontractors to maintain adequate insurance coverage.

PRIMARY POLICIES - The Contractor's insurance is primary to the City's insurance or any self insurance program thereof.

RATING - All insurers shall be authorized to do business in Florida, and shall have an A.M. Best rating of B+ (or better), Class VII (or higher), or otherwise be acceptable to the City if not rated by A.M. Best.

DEDUCTIBLES - The Contractor is responsible for all deductibles. In the event of loss which would have been covered but for the presence of a deductible, the City may withhold from payment to Contractor an amount equal to the deductible to cover such loss should full recovery not be obtained under the insurance policy.

INSURANCE ADJUSTMENTS - These insurance requirements may be increased, reduced, or waived at the City's sole option with an appropriate adjustment to the Contract price.

Document updated on 12/22/2009 by RLD (Risk Management)

City of Tampa MBD Office

U-WMBE Goal Setting Firms Report

6/11/15

ELECTRICAL SERVICES

Brown & Brown Electric, Inc. **Federal Number** 59-2283934
6555 N.W. 9th Ave. S-205 **Phone** (954) 938-8986 **Minority** African American
Ft. Lauderdale, FL 33310-5003 **Fax** (954) 938-9272 **Contact** Winston Brown
E-mail winston@brownandbrownelectric.com

Acktel Electric Company, Inc. **Federal Number** 59-3579225
P.O. Box 52292 **Phone** (904) 356-1274 **Minority** African American
Jacksonville, FL 32201-2292 **Fax** (904) 356-1374 **Contact** Sedley Huey
E-mail acktelel@bellsouth.net

All-In-One Electric, Inc. **Federal Number** 04-3689273
1201 W Waters Ave. **Phone** (813) 849-6331 **Minority** African American
Tampa, FL 33604 **Fax** (813) 514-0473 **Contact** Rodney Jones
E-mail allinoneelectric@msn.com

Prime Electric, LLC **Federal Number** 20-1137443
1229 W. Main St **Phone** (352) 728-5966 **Minority** African American
Leesburg, FL 34748 **Fax** (352) 728-5921 **Contact** Wylie Hamilton
E-mail wylie@primeelectricllc.net

MDH Enterprises, Inc. **Federal Number** 55-0849332
281 E C St. **Phone** (386) 789-2672 **Minority** African American
Orange City, FL 32763 **Fax** (866) 681-5026 **Contact** Matize Hoskins
E-mail matize@my-es.com

PLUMBING CONTRACTOR SERVICES

Reeves Building and Plumbing Contractor, Inc. **Federal Number** 59-3011515
P.O. Box 11724 **Phone** (813) 238-6197 **Minority** African American
Tampa, FL 33680-1724 **Fax** (813) 238-6197 **Contact** Michael Reeves
E-mail ReevesBuilding@verizon.net

City of Tampa MBD Office

U-WMBE Goal Setting Firms Report

6/11/15

SITE WORK, LAND CLEARING SERVICES,

BUN Construction Co., Inc. **Federal Number** 59-3362663
4202 E. Martin Luther King Blvd. **Phone** (813) 931-8270 **Minority** African American
Tampa, FL 33610 **Fax** (813) 931-9185 **Contact** Bart Nwagbuo
E-mail bunconstruction@tampabay.rr.com

Par Development Partners, Inc. **Federal Number** 20-5657414
10002 Forest Hills Dr **Phone** (813) 374-2856 **Minority** African American
Tampa, FL 33612 **Fax** (866) 594-2505 **Contact** Yancy Wilson
E-mail ydwilson@aol.com

McKenzie Construction & Site Development, LLC **Federal Number** 26-2725853
P.O. Box 47115 **Phone** (813) 438-2615 **Minority** African American
Tampa, FL 33647 **Fax** (857) 222-4452 **Contact** Oliver Fernandez, III
E-mail Dan.fernandez@McKenziesiteDevelopment.com

McKenzie Contracting LLC **Federal Number** 46-3561860
PO Box 47115 **Phone** (813) 454-4429 **Minority** African American
Tampa, FL 33647 **Fax** (813) 994-5840 **Contact** Oliver Fernandez
E-mail dan.fernandez@mckenziecontractingllc.com

City of Tampa MBD Office

SLBE Goal Setting Firms Report

as of 6/11/2015

AIR CONDITIONING (HVAC) CONTROL SYSTEMS, COMPLETE

Apollo Construction & Engineering Services, Inc. **Federal Number** 59-2811166

P.O. Box 5848
Sun City Center, FL 33571-5848

Phone (813) 645-4926 **Minority** Small Business
Fax (813) 645-3351 **Contact** Thomas Kamprath
E-mail tkamprath@apollo-construction.com

George G. Solar & Company, Inc. **Federal Number** 59-1314899

4407 W. South Ave.
Tampa, FL 33614

Phone (813) 875-9148 **Minority** Small Business
Fax (813) 879-2315 **Contact** George Solar
E-mail georgesolarcompany@verizon.net

DJ's Commercial Air, LLC **Federal Number** 11-3810019

16601 Manna Road
Lutz, FL 33549

Phone (813) 451-2272 **Minority** Small Business
Fax (813) 948-1224 **Contact** Joseph E Castellano
E-mail jcdc1001@hotmail.com

G.S. Sears Enterprises, Inc. **Federal Number** 46-1251893

3957 Warbler Dr
Winter Haven, FL 33880

Phone (863) 228-2326 **Minority** Small Business
Fax (863) 875-2331 **Contact** Gerald Sears, Jr.
E-mail treetop863@yahoo.com

ELECTRICAL SERVICES

Apollo Construction & Engineering Services, Inc. **Federal Number** 59-2811166

P.O. Box 5848
Sun City Center, FL 33571-5848

Phone (813) 645-4926 **Minority** Small Business
Fax (813) 645-3351 **Contact** Thomas Kamprath
E-mail tkamprath@apollo-construction.com

Gaylord / Miller Electric Corp **Federal Number** 59-1631953

602 North Oregon Avenue
Tampa, FL 33606

Phone (813) 254-4681 **Minority** Small Business
Fax (813) 254-9473 **Contact** James A. Tepper
E-mail james.gmelectric@verizon.net

City of Tampa MBD Office

SLBE Goal Setting Firms Report

as of 6/11/2015

ELECTRICAL SERVICES

All-In-One Electric, Inc. **Federal Number** 04-3689273

1201 W Waters Ave.
Tampa, FL 33604

Phone (813) 849-6331 **Minority** Small Business
Fax (813) 514-0473 **Contact** Rodney Jones
E-mail allinoneelectric@msn.com

JDP Electric, Inc. **Federal Number** 59-3511620

6600 N. Florida Avenue
Tampa, FL 33604

Phone (813) 234-4004 **Minority** Small Business
Fax (813) 236-0394 **Contact** Jeffrey Priede
E-mail jdpinc@tampabay.rr.com

Mandy Electric, Inc. **Federal Number** 59-2914874

9353 E. Fowler Ave.
Thonotosassa, FL 33592

Phone (813) 264-9234 **Minority** Small Business
Fax (813) 333-9701 **Contact** Armando Hernandez
E-mail lhernandez@mandyselectric.com

Crevello Electric, Inc. **Federal Number** 59-3559003

3305 N. Stanley Rd.
Plant City, FL 33565

Phone (813) 986-6106 **Minority** Small Business
Fax (813) 986-9633 **Contact** Bill Crevello
E-mail crevelloelectric@gmail.com

Electrical Handyman Services **Federal Number** 27-2406369

7046-B West Hillsborough Ave
Tampa, FL 33634

Phone (813) 901-8185 **Minority** Small Business
Fax (813) 884-5060 **Contact** Jose Cruz
E-mail ehs915@aol.com

SJM Electric Corporation **Federal Number** 20-4183090

333 North Falkenburg Rd, Suite B201
Tampa, FL 33619

Phone (813) 684-7459 **Minority** Small Business
Fax (813) 654-0420 **Contact** Scott Mroczkowski
E-mail scott@sjmelectric.com

Best Price Electric Service, LLC **Federal Number** 27-1211988

P.O. Box 6516
Seffner, FL 33583

Phone (813) 927-1668 **Minority** Small Business
Fax (813) 409-3154 **Contact** Frank Fleites
E-mail BestPriceElectricServ@hotmail.com

City of Tampa MBD Office

SLBE Goal Setting Firms Report

as of 6/11/2015

ELECTRICAL SERVICES

Aguila Electrical Services, Inc. **Federal Number** 20-0818128

5708 N 56TH ST
Tampa, FL 33610

Phone (813) 368-9323 **Minority** Small Business
Fax (813) 884-4092 **Contact** Jael Aguila
E-mail sales@aguilaelectrical.com

A American Electrical Contractor, Inc. **Federal Number** 59-2603773

9170 126th Avenue N
Largo, FL 33773

Phone (727) 588-0126 **Minority** Small Business
Fax (727) 588-9170 **Contact** Mark Comerford
E-mail mark.aaec@yahoo.com

Rhythms Electric Corporation **Federal Number** 27-3150153

433 37th Ave NE
St. Petersburg, FL 33704

Phone (727) 460-8779 **Minority** Small Business
Fax **Contact** Mathew Krchmar
E-mail rhythmselectric@me.com

TAMCO Electric, Inc. **Federal Number** 59-1396630

P.O. Box 579
Tampa, FL 33614

Phone (813) 986-3472 **Minority** Small Business
Fax (813) 986-5979 **Contact** Steven Moates
E-mail atrujill@tampabay.rr.com

FLOOR COVERING INSTALLATION SERVICES,

Capitol Carpet Maintenance LLC **Federal Number** 20-8176357

P. O. Box 20531
Tampa, FL 33622-0531

Phone (813) 990-8900 **Minority** Small Business
Fax (813) 990-8919 **Contact** Anthony Alfonso
E-mail cccarpet1@gmail.com

Ocean Flooring, Inc **Federal Number** 59-2852308

4721 N. Clark Ave.
Tampa, FL 33614

Phone (813) 870-0967 **Minority** Small Business
Fax (813) 870-2132 **Contact** Harriette Guarino
E-mail oceanflooring@live.com

City of Tampa MBD Office

SLBE Goal Setting Firms Report

as of 6/11/2015

FLOOR COVERING INSTALLATION SERVICES,

Floor Installation Service, Inc. **Federal Number** 59-1560828

5410 Boran Drive
Tampa, FL 33610

Phone (813) 664-8600 **Minority** Small Business
Fax (813) 664-8611 **Contact** Frank Newsome
E-mail sales@floorinstallationservice.com

General Flooring Corporation **Federal Number** 59-3627814

8602 Temple Terrace Highway D-42
Tampa, FL 33637

Phone (813) 984-2882 **Minority** Small Business
Fax (813) 984-2872 **Contact** Jody Collins
E-mail jbennett@gfc-fla.com

Gulf Coast Floors, Inc. **Federal Number** 43-2078101

10311 Woodberry Road #211
Tampa, FL 33619

Phone (813) 655-5599 **Minority** Small Business
Fax (813) 655-8500 **Contact** Joshua Camp
E-mail jcamp@gulfcoastfloors.com

Felix Tile And Marble Services, Inc. **Federal Number** 27-0091107

2143 W. Grace St.
Tampa, FL 33607

Phone (813) 453-6162 **Minority** Small Business
Fax (813) 373-5401 **Contact** Felix Perez
E-mail felixrtile.pere@yahoo.com

Flooring Worx, Inc. **Federal Number** 26-3878396

475 B Roberts Rd.
Oldsmar, FL 34677

Phone (813) 341-0170 **Minority** Small Business
Fax (813) 341-0171 **Contact** Jennifer Clark
E-mail Jenclark@flooring-worx.com

Small Street Construction Company, Inc. **Federal Number** 25-1920573

13215 US Highway 301
Dade City, FL 33525

Phone (813) 600-5408 **Minority** Small Business
Fax (813) 600-3291 **Contact** Piyush Mulji
E-mail piyush@SmallStreetConstruction.Com

Pema General Services, LLC **Federal Number** 76-0729474

14003 Tish Place
Tampa, FL 33613

Phone (813) 760-2822 **Minority** Small Business
Fax (813) 969-6960 **Contact** Jorge Pena
E-mail pemag.s.jp@live.com

City of Tampa MBD Office

SLBE Goal Setting Firms Report

as of 6/11/2015

FLOOR COVERING INSTALLATION SERVICES,

Sandra Leppert & Associates, Inc. **Federal Number** 59-2997943

P.O. Box 271893
Tampa, FL 33688

Phone (813) 765-6640
Fax (813) 962-8891
E-mail info@slfixtures.com

Minority Small Business
Contact Sandra Leppert

PLUMBING CONTRACTOR SERVICES

Apollo Construction & Engineering Services, Inc. **Federal Number** 59-2811166

P.O. Box 5848
Sun City Center, FL 33571-5848

Phone (813) 645-4926
Fax (813) 645-3351
E-mail tkamprath@apollo-construction.com

Minority Small Business
Contact Thomas Kamprath

Reeves Building and Plumbing Contractor, Inc. **Federal Number** 59-3011515

P.O. Box 11724
Tampa, FL 33680-1724

Phone (813) 238-6197
Fax (813) 238-6197
E-mail ReevesBuilding@verizon.net

Minority Small Business
Contact Michael Reeves

Ciccarello & Son, Inc. **Federal Number** 59-3492581

7117 N. Armenia Ave., #C
Tampa, FL 33604

Phone (813) 933-5512
Fax (813) 933-5225
E-mail jciccarello@ciccarelloandson.com

Minority Small Business
Contact Judy Ciccarello

McLain Plumbing & Mechanical **Federal Number** 59-3261752

2403 East 4th Ave
Tampa, FL 33634

Phone (813) 876-9046
Fax (813) 873-9895
E-mail sandramclain01@yahoo.com

Minority Small Business
Contact Sandra McLain

First Plumbing & Air Conditioning of FL, Inc. **Federal Number** 59-3389067

13932 Methodist Church Rd.
Dover, FL 33527

Phone (813) 770-0361
Fax (813) 764-9638
E-mail firstplumbing@msn.com

Minority Small Business
Contact Timothy Trujillo

City of Tampa MBD Office

SLBE Goal Setting Firms Report

as of 6/11/2015

PLUMBING CONTRACTOR SERVICES

Johnny Doan Management, Inc. **Federal Number** 06-1677200

418 E. Old Hillsborough Ave.
Seffner, FL 33584

Phone (813) 689-8179 **Minority** Small Business
Fax (813) 689-8170 **Contact** James Dunger
E-mail tommyseffner@aol.com

Llona Plumbing, Inc. **Federal Number** 56-2444131

P.O. Box 4479
Tampa, FL 33673-0325

Phone (813) 477-1870 **Minority** Small Business
Fax (813) 251-2420 **Contact** Laureano Llona
E-mail llonaplumbing@verizon.net

Larson Plumbing, Inc. **Federal Number** 59-3254656

3205 E. 8th Ave.
Tampa, FL 33605

Phone (813) 242-0911 **Minority** Small Business
Fax (813) 242-0048 **Contact** Christopher Larson
E-mail Chris@larsonplumbing.net

JVA Plumbing, Inc. **Federal Number** 27-3906735

2138 W. Grace St.
Tampa, FL 33607

Phone (813) 841-5874 **Minority** Small Business
Fax (813) 254-0256 **Contact** Janet Varon
E-mail jva@jvaconstruction.com

Global Sanchez, Inc. **Federal Number** 65-0277078

816 Manatee Ave. E., Suite 18
Brandenton, FL 34208

Phone (941) 758-2551 **Minority** Small Business
Fax (941) 739-6383 **Contact** Philip Feikema
E-mail MARKETING@global-sanchez.com

Paradiso Group, Inc. **Federal Number** 22-3964822

4207 Grainary Ave
Tampa, FL 33624

Phone (813) 629-6948 **Minority** Small Business
Fax (813) 961-4629 **Contact** Pasquale Paradiso
E-mail paradisoplumbing@verizon.net

Stress Free Construction, LLC **Federal Number** 46-1339562

4501 East Columbus Drive
Tampa, FL 33605

Phone (813) 737-2477 **Minority** Small Business
Fax (813) 621-5363 **Contact** David Lowrey
E-mail david@tampastressfree.com

City of Tampa MBD Office

SLBE Goal Setting Firms Report

as of 6/11/2015

SITE WORK, LAND CLEARING SERVICES,

BUN Construction Co., Inc. **Federal Number** 59-3362663

4202 E. Martin Luther King Blvd.
Tampa, FL 33610

Phone (813) 931-8270
Fax (813) 931-9185
Minority Small Business
Contact Bart Nwagbuo
E-mail bunconstruction@tampabay.rr.com

Castco Construction, Inc. **Federal Number** 59-2548614

9001 126th Ave. North
Largo, FL 33773

Phone (727) 585-4714
Fax (727) 585-5091
Minority Small Business
Contact Israel Castro
E-mail cconstr@tampabay.rr.com

Johnson's Excavation & Services, Inc. **Federal Number** 59-3031174

1706 East Trapnell Road
Plant City, FL 33566

Phone (813) 752-7097
Fax (813) 719-9052
Minority Small Business
Contact Donathan Johnson
E-mail sales@jescontracting.com

Tampa Bay Construction & Engineering, Inc. **Federal Number** 59-3713572

10503 Palm Cove Ave
Tampa, FL 33647

Phone (813) 984-9898
Fax (813) 907-0980
Minority Small Business
Contact Ahmad Erchid
E-mail aerchid@tbcei.com

---

2 Meyer Corp. **Federal Number** 56-2384669

6308 Lake Sunrise Dr.
Apollo Beach, FL 33572

Phone (813) 645-3150
Fax (813) 645-5634
Minority Small Business
Contact Melissa Gugliotti
E-mail Renatonjr@aol.com

Par Development Partners, Inc. **Federal Number** 20-5657414

10002 Forest Hills Dr
Tampa, FL 33612

Phone (813) 374-2856
Fax (866) 594-2505
Minority Small Business
Contact Yancy Wilson
E-mail ydwilson@aol.com

Velocity Construction, Inc. **Federal Number** 74-3082984

1320 E. 137th Ave
Tampa, FL 33613

Phone (813) 624-2117
Fax (800) 807-0314
Minority Small Business
Contact William Connor
E-mail bconnor@tampabay.rr.com

City of Tampa MBD Office

SLBE Goal Setting Firms Report

as of 6/11/2015

SITE WORK, LAND CLEARING SERVICES,

Bio-Mass Tech, Inc. **Federal Number** 59-3232185

15212 SR 52
Land O' Lakes, FL 34638

Phone (727) 243-2200
Fax (813) 996-7236
Minority Small Business
Contact James Griffin
E-mail James@biomasstech.com

Paynes Environmental Services, LLC **Federal Number** 27-1037046

1311 Us Hwy 301 S.
Tampa, FL 33619

Phone (813) 677-6822
Fax (813) 467-9029
Minority Small Business
Contact Annette Payne
E-mail paynestrees@cs.com

McKenzie Construction & Site Development, LLC **Federal Number** 26-2725853

P.O. Box 47115
Tampa, FL 33647

Phone (813) 438-2615
Fax (857) 222-4452
Minority Small Business
Contact Oliver Fernandez, III
E-mail Dan.fernandez@McKenziesiteDevelopment.com

JMJ Site Development, Inc **Federal Number** 27-3413832

P.O. Box 1095
Lithia, FL 33547

Phone (813) 927-2484
Fax
Minority Small Business
Contact Jeff Joaquin
E-mail jmjsitedevelopment@gmail.com

Ortzak Technology, LLC **Federal Number** 45-4837502

13014 N. Dale Mabry Hwy, Suite 623
Tampa, FL 33618

Phone (813) 961-6023
Fax (813) 961-6023
Minority Small Business
Contact Daniel Castro
E-mail dcastro@ortzak.com

McKenzie Contracting LLC **Federal Number** 46-3561860

PO Box 47115
Tampa, FL 33647

Phone (813) 454-4429
Fax (813) 994-5840
Minority Small Business
Contact Oliver Fernandez
E-mail dan.fernandez@mckenziecontractingllc.com

City of Tampa MBD Office

SLBE Goal Setting Firms Report

as of 6/11/2015

SLBE Contract Goal

Goal
24.8%

Subcontract Goal Contact List: SLBEs and Underutilized WMBEs
(The Underutilized WMBE Industry Category for Subcontracts is Construction - BBE Certified)**

Project 14-C-00049 (Wayne C. Papy Center Addition Renovation)

# Of Firms	Company Name	Federal Number	Address	Phone Number	SLBE/WMBE CLASS	City, State, Zip Code	Fax Number	Contact Name	Contact Email
1	2 Meyer Corp.	56-2384669	6308 Lake Sunrise Dr.	(813) 645-3150	Small Business	Apollo Beach, FL 33572	(813) 645-5634	Melissa Gugliotti	Renatonjr@aol.com
2	Acktel Electric Company, Inc.	59-3579225	P.O. Box 52292	(904) 356-1274	**African American**	Jacksonville, FL 32201-2292	(904) 356-1374	Sedley Huey	acktelel@bellsouth.net
3	A American Electrical Contractor, Inc.	59-2603773	9170 126th Avenue N	(727) 588-0126	Small Business	Largo, FL 33773	(727) 588-9170	Mark Comerford	mark.aaec@yahoo.com
4	Aguila Electrical Services, Inc.	20-0818128	5708 N 56TH ST	(813) 368-9323	Small Business	Tampa, FL 33610	(813) 884-4092	Jael Aguila	sales@aguilaelectrical.com
5	All-In-One Electric, Inc.	04-3689273	1201 W Waters Ave.	(813) 849-6331	**SLBE/BBE**	Tampa, FL 33604	(813) 514-0473	Rodney Jones	allinoneelectric@msn.com
6	Apollo Construction & Engineering Services, Inc.	59-2811166	P.O. Box 5848	(813) 645-4926	Small Business	Sun City Center, FL 33571-5848	(813) 645-3351	Thomas Kamprath	tkamprath@apollo-construction.com
7	Best Price Electric Service, LLC	27-1211988	P.O. Box 6516	(813) 927-1668	Small Business	Seffner, FL 33583	(813) 409-3154	Frank Fleites	BestPriceElectricServ@hotmail.com
8	Bio-Mass Tech, Inc.	59-3232185	15212 SR 52	(727) 243-2200	Small Business	Land O' Lakes, FL 34638	(813) 996-7236	James Griffin	James@biomasstech.com
9	Brown & Brown Electric, Inc.	59-2283934	6555 N.W. 9th Ave. S-205	(954) 938-8986	**African American**	Ft. Lauderdale, FL 33310-5003	(954) 938-9272	Winston Brown	winston@brownandbrownelectric.com
10	BUN Construction Co., Inc.	59-3362663	4202 E. Martin Luther King Blvd.	(813) 931-8270	**SLBE/BBE**	Tampa, FL 33610	(813) 931-9185	Bart Nwagbuo	bunconstruction@tampabay.rr.com
11	Capitol Carpet Maintenance LLC	20-8176357	P. O. Box 20531	(813) 990-8900	Small Business	Tampa, FL 33622-0531	(813) 990-8919	Anthony Alfonso	cccarpet1@gmail.com
12	Castco Construction, Inc.	59-2548614	9001 126th Ave. North	(727) 585-4714	Small Business	Largo, FL 33773	(727) 585-5091	Israel Castro	cconstr@tampabay.rr.com

****Note: For this Bid, WMBE firms certified as African American/Black Business Enterprises (BBE) may count toward the subcontract goal. Refer to MBD Form 70-Procurement Guidelines**

Report Date: June 11, 2015

Subcontract Goal Contact List: SLBEs and Underutilized WMBEs
(The Underutilized WMBE Industry Category for Subcontracts is Construction - BBE Certified)**

Project 14-C-00049 (Wayne C. Papy Center Addition Renovation)

# Of Firms	Company Name	Federal Number	Address	Phone Number	SLBE/WMBE CLASS	City, State, Zip Code	Fax Number	Contact Name	Contact Email
13	Ciccarello & Son, Inc.	59-3492581	7117 N. Armenia Ave., #C	(813) 933-5512	Small Business	Tampa, FL 33604	(813) 933-5225	Judy Ciccarello	jciccarello@ciccarelloandson.com
14	Crevello Electric, Inc.	59-3559003	3305 N. Stanley Rd.	(813) 986-6106	Small Business	Plant City, FL 33565	(813) 986-9633	Bill Crevello	crevelloelectric@gmail.com
15	DJ's Commercial Air, LLC	11-3810019	16601 Manna Road	(813) 451-2272	Small Business	Lutz, FL 33549	(813) 948-1224	Joseph E Castellano	jcdc1001@hotmail.com
16	Electrical Handyman Services	27-2406369	7046-B West Hillsborough Ave	(813) 901-8185	Small Business	Tampa, FL 33634	(813) 884-5060	Jose Cruz	ehs915@aol.com
17	Felix Tile And Marble Services, Inc.	27-0091107	2143 W. Grace St.	(813) 453-6162	Small Business	Tampa, FL 33607	(813) 373-5401	Felix Perez	felixrtile.pere@yahoo.com
18	First Plumbing & Air Conditioning of FL, Inc.	59-3389067	13932 Methodist Church Rd.	(813) 770-0361	Small Business	Dover, FL 33527	(813) 764-9638	Timothy Trujillo	firstplumbing@msn.com
19	Floor Installation Service, Inc.	59-1560828	5410 Boran Drive	(813) 664-8600	Small Business	Tampa, FL 33610	(813) 664-8611	Frank Newsome	sales@floorinstallationservice.com
20	Flooring Worx, Inc.	26-3878396	475 B Roberts Rd.	(813) 341-0170	Small Business	Oldsmar, FL 34677	(813) 341-0171	Jennifer Clark	Jenclark@flooring-worx.com
21	G.S. Sears Enterprises, Inc.	46-1251893	3957 Warbler Dr	(863) 228-2326	Small Business	Winter Haven, FL 33880	(863) 875-2331	Gerald Sears, Jr.	treetop863@yahoo.com
22	Gaylord / Miller Electric Corp	59-1631953	602 North Oregon Avenue	(813) 254-4681	Small Business	Tampa, FL 33606	(813) 254-9473	James A. Tepper	james.gmelectric@verizon.net
23	General Flooring Corporation	59-3627814	8602 Temple Terrace Highway D-42	(813) 984-2882	Small Business	Tampa, FL 33637	(813) 984-2872	Jody Collins	jbennett@gfc-fla.com
24	George G. Solar & Company, Inc.	59-1314899	4407 W. South Ave.	(813) 875-9148	Small Business	Tampa, FL 33614	(813) 879-2315	George Solar	georgesolarcompany@verizon.net

****Note: For this Bid, WMBE firms certified as African American/Black Business Enterprises (BBE) may count toward the subcontract goal. Refer to MBD Form 70-Procurement Guidelines**

Report Date: June 11, 2015

Subcontract Goal Contact List: SLBEs and Underutilized WMBEs
(The Underutilized WMBE Industry Category for Subcontracts is Construction - BBE Certified)**

Project 14-C-00049 (Wayne C. Papy Center Addition Renovation)

# Of Firms	Company Name	Federal Number	Address	Phone Number	SLBE/WMBE CLASS	City, State, Zip Code	Fax Number	Contact Name	Contact Email
25	Global Sanchez, Inc.	65-0277078	816 Manatee Ave. E., Suite 18	(941) 758-2551	Small Business	Brandenton, FL 34208	(941) 739-6383	Philip Feikema	MARKETING@global-sanchez.com
26	Gulf Coast Floors, Inc.	43-2078101	10311 Woodberry Road #211	(813) 655-5599	Small Business	Tampa, FL 33619	(813) 655-8500	Joshua Camp	jcamp@gulfcoastfloors.com
27	JDP Electric, Inc.	59-3511620	6600 N. Florida Avenue	(813) 234-4004	Small Business	Tampa, FL 33604	(813) 236-0394	Jeffrey Priede	jdpinc@tampabay.rr.com
28	JMJ Site Development, Inc	27-3413832	P.O. Box 1095	(813) 927-2484	Small Business	Lithia, FL 33547		Jeff Joaquin	jmjsitedevelopment@gmail.com
29	Johnny Doan Management, Inc.	06-1677200	418 E. Old Hillsborough Ave.	(813) 689-8179	Small Business	Seffner, FL 33584	(813) 689-8170	James Dunger	tommyseffner@aol.com
30	Johnson's Excavation & Services, Inc.	59-3031174	1706 East Trapnell Road	(813) 752-7097	Small Business	Plant City, FL 33566	(813) 719-9052	Donathan Johnson	sales@jescontracting.com
31	JVA Plumbing, Inc.	27-3906735	2138 W. Grace St.	(813) 841-5874	Small Business	Tampa, FL 33607	(813) 254-0256	Janet Varon	jva@jvaconstruction.com
32	Larson Plumbing, Inc.	59-3254656	3205 E. 8th Ave.	(813) 242-0911	Small Business	Tampa, FL 33605	(813) 242-0048	Christopher Larson	Chris@larsonplumbing.net
33	Llona Plumbing, Inc.	56-2444131	P.O. Box 4479	(813) 477-1870	Small Business	Tampa, FL 33673-0325	(813) 251-2420	Laureano Llona	llonaplumbing@verizon.net
34	Mandy Electric, Inc.	59-2914874	9353 E. Fowler Ave.	(813) 264-9234	Small Business	Thonotosassa, FL 33592	(813) 333-9701	Armando Hernandez	lhernandez@mandyselectric.com
35	McKenzie Construction & Site Development, LLC	26-2725853	P.O. Box 47115	(813) 438-2615	**SLBE/BBE**	Tampa, FL 33647	(857) 222-4452	Oliver Fernandez, III	Dan.fernandez@McKenziesiteDevelopment.com
36	McKenzie Contracting LLC	46-3561860	PO Box 47115	(813) 454-4429	**SLBE/BBE**	Tampa, FL 33647	(813) 994-5840	Oliver Fernandez	dan.fernandez@mckenziecontractingllc.com

****Note: For this Bid, WMBE firms certified as African American/Black Business Enterprises (BBE) may count toward the subcontract goal. Refer to MBD Form 70-Procurement Guidelines**

Report Date: June 11, 2015

Subcontract Goal Contact List: SLBEs and Underutilized WMBEs
(The Underutilized WMBE Industry Category for Subcontracts is Construction - BBE Certified)**

Project 14-C-00049 (Wayne C. Papy Center Addition Renovation)

# Of Firms	Company Name	Federal Number	Address	Phone Number	SLBE/WMBE CLASS	City, State, Zip Code	Fax Number	Contact Name	Contact Email
37	McLain Plumbing & Mechanical	59-3261752	2403 East 4th Ave	(813) 876-9046	Small Business	Tampa, FL 33634	(813) 873-9895	Sandra McLain	sandramclain01@yahoo.com
38	MDH Enterprises, Inc.	55-0849332	281 E C St.	(386) 789-2672	**African American**	Orange City, FL 32763	(866) 681-5026	Matize Hoskins	matize@my-es.com
39	Ocean Flooring, Inc	59-2852308	4721 N. Clark Ave.	(813) 870-0967	Small Business	Tampa, FL 33614	(813) 870-2132	Harriette Guarino	oceanflooring@live.com
40	Ortzak Technology, LLC	45-4837502	13014 N. Dale Mabry Hwy, Suite 623	(813) 961-6023	Small Business	Tampa, FL 33618	(813) 961-6023	Daniel Castro	dcastro@ortzak.com
41	Par Development Partners, Inc.	20-5657414	10002 Forest Hills Dr	(813) 374-2856	**SLBE/BBE**	Tampa, FL 33612	(866) 594-2505	Yancy Wilson	ydwilson@aol.com
42	Paradiso Group, Inc.	22-3964822	4207 Grainary Ave	(813) 629-6948	Small Business	Tampa, FL 33624	(813) 961-4629	Pasquale Paradiso	paradisoplumbing@verizon.net
43	Paynes Environmental Services, LLC	27-1037046	1311 Us Hwy 301 S.	(813) 677-6822	Small Business	Tampa, FL 33619	(813) 467-9029	Annette Payne	paynestrees@cs.com
44	Pema General Services, LLC	76-0729474	14003 Tish Place	(813) 760-2822	Small Business	Tampa, FL 33613	(813) 969-6960	Jorge Pena	pemag.s.jp@live.com
45	Prime Electric, LLC	20-1137443	1229 W. Main St	(352) 728-5966	**African American**	Leesburg, FL 34748	(352) 728-5921	Wylie Hamilton	wylie@primeelectricllc.net
46	Reeves Building and Plumbing Contractor, Inc.	59-3011515	P.O. Box 11724	(813) 238-6197	**SLBE/BBE**	Tampa, FL 33680-1724	(813) 238-6197	Michael Reeves	ReevesBuilding@verizon.net
47	Rhythms Electric Corporation	27-3150153	433 37th Ave NE	(727) 460-8779	Small Business	St. Petersburg, FL 33704		Mathew Krchmar	rhythmselectric@me.com

****Note: For this Bid, WMBE firms certified as African American/Black Business Enterprises (BBE) may count toward the subcontract goal. Refer to MBD Form 70-Procurement Guidelines**

Report Date: June 11, 2015

Subcontract Goal Contact List: SLBEs and Underutilized WMBEs
(The Underutilized WMBE Industry Category for Subcontracts is Construction - BBE Certified)**

Project 14-C-00049 (Wayne C. Papy Center Addition Renovation)

# Of Firms	Company Name	Federal Number	Address	Phone Number	SLBE/WMBE CLASS	City, State, Zip Code	Fax Number	Contact Name	Contact Email
48	Sandra Leppert & Associates, Inc.	59-2997943	P.O. Box 271893	(813) 765-6640	Small Business	Tampa, FL 33688	(813) 962-8891	Sandra Leppert	info@slfixtures.com
49	SJM Electric Corporation	20-4183090	333 North Falkenburg Rd, Suite B201	(813) 684-7459	Small Business	Tampa, FL 33619	(813) 654-0420	Scott Mroczkowski	scott@sjmelectric.com
50	Small Street Construction Company, Inc.	25-1920573	13215 US Highway 301	(813) 600-5408	Small Business	Dade City, FL 33525	(813) 600-3291	Piyush Mulji	piyush@SmallStreetConstruction.Com
51	Stress Free Construction, LLC	46-1339562	4501 East Columbus Drive	(813) 737-2477	Small Business	Tampa, FL 33605	(813) 621-5363	David Lowrey	david@tampastressfree.com
52	TAMCO Electric, Inc.	59-1396630	P.O. Box 579	(813) 986-3472	Small Business	Tampa, FL 33614	(813) 986-5979	Steven Moates	atrujill@tampabay.rr.com
53	Tampa Bay Construction & Engineering, Inc.	59-3713572	10503 Palm Cove Ave	(813) 984-9898	Small Business	Tampa, FL 33647	(813) 907-0980	Ahmad Erchid	aerchid@tbcei.com
54	Velocity Construction, Inc.	74-3082984	1320 E. 137th Ave	(813) 624-2117	Small Business	Tampa, FL 33613	(800) 807-0314	William Connor	bconnor@tampabay.rr.com

****Note: For this Bid, WMBE firms certified as African American/Black Business Enterprises (BBE) may count toward the subcontract goal. Refer to MBD Form 70-Procurement Guidelines**

Report Date: June 11, 2015

Instructions Regarding Use of the SLBE Goal Setting List

Bidders must solicit a subcontracting bid from ALL of the firms listed on the SLBEs list provided on the City's web site, and provide documentation of emails, faxes, phone calls, letters, or other communication with the firms a first step in demonstrating Good-Faith Efforts to achieve the goal set for SLBE participation on this contract.

The list is formatted to facilitate e-mailing of a solicitation to the listed firms by copying and pasting the email addresses.

The SLBE participation Goal is based upon the availability of the certified firms indicated on the attached list. The Goal and Requirements of the City's Equal Business Opportunity Program are stated in the Bid/Contract Document, Specifications.

SOLICITATION FOR SUBCONTRACTOR QUOTES

From:
OUR COMPANY NAME:
TELEPHONE NUMBER:
ADDRESS:
FAX NUMBER:
E-MAIL ADDRESS:

To Subcontractor:

Our firm is in the process of preparing a bid for a **City of Tampa Contract**. Please accept this notice as our request for quotes for the scope of work identified below. Please respond to this request by filling in the information below and returning via e-mail or fax to the address or number provided. Please contact us if you need any assistance in obtaining bonding, lines of credit, insurance, assistance in obtaining necessary equipment, supplies, materials, participation in a City-sponsored mentor-protégé program, or if you have any questions.

Plans and Specs for this project are posted at:
http://www.tampagov.net/dept_contract_administration/programs_and_services/construction_project_bidding/

CONTRACT NO.:
CONTRACT NAME:
CITY'S BID OPENING DATE:
DEADLINE FOR YOUR SUBCONTRACTOR BID OR RESPONSE:
SPECIFIC SCOPE OF WORK:

Please complete and submit with your subcontract bid or response:
YOUR FIRM'S NAME:
MAILING ADDRESS:
CITY:
STATE:
ZIP:
FAX NUMBER:
E-MAIL ADDRESS:
__Yes, my company is interested in quoting this project for the following items of work:

__No, my company will not quote this project for the following reason(s):

(Sample Suggested Sub Solicitation 3-9-9 Tampa MBDO)

PROPOSAL

To the Mayor and City Council of the City of Tampa, Florida:

Name of Bidder _____

_____
Business Phone Number and Email Address

_____
Business Name and Mailing Address

_____
Phone Number and Name of Contact Regarding Permits

_____
Contractor/Qualifiers Name and Federal Identification Number

Date of Proposal _____

(If Bidder is a firm, fill in the following blanks):

Names and Residential Addresses of Partners

_____

_____

(If Bidder is a corporation, fill in the following blanks):

Organized under the laws of the State of _____

Names and Address of President

_____

_____

Name and Address of Vice President

_____

_____

Name and Address of Secretary

_____

_____

Names and Address of Treasurer

_____

_____

The above-named Bidder affirms and declares:

(1) That the Bidder is of lawful age and that no other person, firm or corporation has any interest in this Proposal or in the Contract proposed to be entered into.

(2) That this Proposal is made without any understanding, agreement or connection with any other person, firm, or corporation making Proposal for the same purposes, and is in all respects fair and without collusion or fraud.

(3) That the Bidder is not in arrears to the City of Tampa, upon debt or contract, and is not a defaulter, as surety or otherwise, upon any obligation to the City of Tampa.

(4) That no officer or employee or person whose salary is payable in whole or in part from the City Treasury is, shall be or become interested, directly or indirectly, as a contracting party, partner, stockholder, surety or otherwise, in this Proposal, or in the performance of the Contract, or in the supplies, materials, or equipment and work or labor to which it relates, or in any portion of the profits thereof.

(5) That the Bidder has carefully examined the site of the work and that, from his own investigations, he has satisfied himself as to the nature and location of the work, the character, quality, and quantity of materials and the kinds and extent of equipment and other facilities needed for the performance of the work, the general and local conditions and all difficulties to be encountered, and all other items which may, in any way, affect the work or its performance.

(6) That the Bidder

_____ Has; Treasury Number _____

_____ Has not
(Check applicable box)

previously performed work under the President's Executive Order Nos. 11246 and 11375.

(7) That the undersigned, as Bidder, also declares that he has carefully examined and fully understands all the component parts of the Contract Documents and agrees that he will execute the Contract and finish the required Performance Bond and will completely perform the work in strict accordance with the terms of the Contract and the Contract Documents therein referred to for the following prices, to wit:

Contract Item No.	Estimated Quantity	Description and Price in Words	Computed Total Price for Item in Figures
BASE BID	LS	The work includes the furnishing of all labor, equipment, and material for the construction of a 1,000 sf lobby addition with a steel frame superstructure, curtain wall exterior finish, standing seam metal and modified bitumen roofs, HVAC system, interior metal stud framing, drywall, finishes, painting, plumbing, electrical, any allowances that may be listed in Section 01020, and with all associated work required for a complete project in accordance with the Contract Documents. _____ _____ dollars and _____ cents (BASE BID) LS	$_____
ALTERNATE NO. 1	LS	The work includes the furnishing of all labor, equipment, and material to install 3300 sf of new "Marley" type dance floor with sub flooring and vented cove base, as shown and indicated but not limited to Sheet A2.2, and with all associated work required for a complete project in accordance with the Contract Documents. _____ _____ dollars and _____ cents (ADDITIVE) LS	$_____

Computed Total Price In Words:

_____

_____ dollars and _____ cents.

Computed Total Price in Figures: $_____

The bidder acknowledges that the following addenda have been received and that the changes covered by the addendum(s) have been taken into account in this proposal: #1 ___ #2 ___ #3 ___ #4___ #5___.

The bidder acknowledges the requirements of the City of Tampa's Equal Business Opportunity Program.

Bidder acknowledges that included in the various items of the proposal and the Total Bid Price are costs for complying with the Florida Trench Safety Act (90096), (Laws of Fla.) effective October 1, 1990. The bidder further identifies the costs to be summarized below:

	Trench Safety Measure (Description)	Unit of Measure (LF, SY)	Unit Quantity	Unit Cost	Extended Cost
A.	_____	_____	_____	_____	_____
B.	_____	_____	_____	_____	_____
C.	_____	_____	_____	_____	_____
D.	_____	_____	_____	_____	_____

Total Cost $_____

Signed _____

Failure to complete the above may result in the bid being declared non-responsive.

Accompanying this Proposal is a certified check, cashier's check or Bid Bond (form included herein must be used) on the form at least five (5) percent of the total amount of the Proposal which check shall become the property of the

_____ of _____
(Name of Bank or Surety) (City & State)

City of Tampa, or which bond shall become forthwith due and payable to the City of Tampa, if this Proposal shall be accepted by the City of Tampa and the undersigned shall fail to execute a contract with and to furnish the required Performance Bond and Payment Bond to the City of Tampa within twenty (20) days after the date of receipt of written Notice of Award by the City of Tampa to the undersigned so to do.

Dated _____, 20___

_____
(Name of Bidder)

_____
(Address of Bidder)

_____
(Signature)

_____
(Title)

Where Bidder is a Corporation:

Attest:

_____
Secretary

AFFIX
CORPORATE
SEAL

(ACKNOWLEDGMENT OF PRINCIPAL)

STATE OF)
) SS:
COUNTY OF)

For a Corporation:

STATE OF _____
COUNTY OF _____

The foregoing instrument was acknowledged before me this ___ of _____, 20___ by _____ of _____, a _____ corporation, on behalf of the corporation. He/she is ___ personally known or has ___ produced _____ as identification.

_____
Notary

My Commission Expires:

_____

For an Individual:

STATE OF _____
COUNTY OF _____

The foregoing instrument was acknowledged before me this ___ of _____, 20___ by _____ who is ___ personally known to me or has ___ produced _____ as identification.

_____
Notary

My Commission Expires:

_____

For a Firm:

STATE OF _____
COUNTY OF _____

The foregoing instrument was acknowledged before me this ___ of _____, 20___ by _____ who signed on behalf of the said firm. He/she is ___ personally known or has ___ produced _____ as identification.

_____
Notary

My Commission Expires:

_____

_____

Good Faith Effort Compliance Plan for Small Local Business Subcontracting

City of Tampa - Equal Business Opportunity Program

Contract _____ **Bid Date** _____

Bidder _____

Signature _____ **Date** _____

Name _____ **Title** _____

The following Compliance Plan is a true report of Good Faith Efforts made to accomplish subcontracting goals for Small Local Business Enterprises, SLBEs, on the referenced contract:

□ **The goal for SLBE participation has been met or exceeded. See the DMI form reporting subcontractors to be utilized.**
(Check Box, if appropriate; the remainder of the Compliance Plan need not be reported.)

□ **The goal for SLBE participation has not been met. The following is a recap of Good Faith Efforts made:**
(Check applicable boxes below. Enclose additional documents, and/or add remarks below as needed.)

(1) Soliciting through reasonable and available means the interest of SLBEs that have the capability to perform the work of the contract. The Bidder or Contractor must solicit this interest within sufficient time to allow the SLBEs to respond. The Bidder or Contractor must take appropriate steps to follow up initial solicitations with interested SLBEs. □ See DMI report forms for subcontractors solicited. □ See enclosed supplemental data on solicitation efforts. □ Remarks:

(2) Providing interested SLBEs with adequate information about the plans, specifications, and requirements of the contract, including addenda, in a timely manner to assist them in responding to the solicitation. □ See enclosed sample solicitation. □ Remarks:

(3) Negotiating in good faith with interested SLBEs that have submitted bids. Documentation of negotiation must include the names, addresses, and telephone numbers of SLBEs that were solicited; the date of each such solicitation; a description of the information provided regarding the plans and specifications for the work selected for subcontracting; and evidence as to why agreements could not be reached with SLBEs to perform the work. That there may be some additional costs involved in soliciting and using SLBEs is not a sufficient reason for a contractor's failure to meet the goals, as long as such costs are reasonable. Bidders are not required to accept higher quotes in order to meet the goal. □ DMI subcontractor-utilized forms reflect successful negotiations □ This project is of a low-bid nature and negotiations are limited to clarifications of scope and specifications. □ See enclosed document. □ Remarks:

(4) Not rejecting SLBEs as being unqualified without sound reasons based on a thorough investigation of their capabilities. The SLBEs standing within its industry, membership in specific groups, organizations, or associations and political or social affiliations are not legitimate causes for rejecting or not soliciting bids to meet the goals. □ Not applicable. □ See attached explanation for rejection of a low-bidding subcontractor's bid. □ Remarks:

(5) Making a portion of the work available to SLBE subcontractors and suppliers and to select those portions of the work or material consistent with the available SLBE subcontractors and suppliers, so as to facilitate meeting the goal. □ Sub-Contractors were allowed to bid on their own choice of work or trade without restriction to a pre-determined portion. □ See enclosed comments. □ Remarks:

(6) Making good faith efforts, despite the ability or desire of a Bidder or Contractor to perform the work of a contract with its own organization. A Bidder or Contractor who desires to self-perform the work of a contract must demonstrate good faith efforts unless the goal has been met. □ Sub-Contractors were not prohibited from submitting bids on work not usually sub-contracted. □ Remarks:

(7) Selecting portions of the work to be performed by SLBEs in order to increase the likelihood that the goals will be met. This includes, where appropriate, breaking out contract work items into economically feasible units to facilitate SLBE participation, even when the Bidder or Contractor might otherwise prefer to perform these work items with its own forces. □ Sub-Contractors were allowed to bid on their own choice of work or trade without restriction to a pre-determined portion. □ Sub-Contractors were not prohibited from submitting bids on work not usually sub-contracted. □ See enclosed comments. □ Remarks:

(8) Making efforts to assist interested SLBEs in obtaining bonding, lines of credit, or insurance as required by the city or contractor. □ See enclosed sample solicitation □ see enclosed document. □ Remarks:

(9) Making efforts to assist interested SLBEs in obtaining necessary equipment, supplies, materials, or related assistance or services, including participation in a City-sponsored mentor-protégé program. □ See enclosed sample solicitation. □ See enclosed document. □ Remarks:

(10) Effectively using the services of the City and other organizations that provide assistance in the recruitment and placement of SLBEs. □ See enclosed document. □ The following services were used:

Other Supporting Good Faith Efforts: □ See enclosed document. □ Remarks:

GFECP

Compliance Plan: Guidance For Meeting Good Faith Efforts

1. All firms on the SLBE Goal Setting List must be solicited and documentation provided for email, fax, letters, phone calls, and other communication with the listed firms. The DMI Solicited and DMI-Utilized forms must be completed for all firms solicited or utilized. Other opportunities for subcontracting may be explored by consulting the City of Tampa and/or Hillsborough County certification listings of SLBE's.

2. Solicitation of SLBEs, via written or electronic notification, should provide specific information on the services needed, where plans can be reviewed and assistance offered in obtaining these, if required. Solicitations should be typically be sent a week or more before the bid date. Sample copies of the bidder's solicitations should be provided.

3. With any quotes received, a follow-up should be made whenever needed to confirm scope of work. For any SLBE low quotes rejected, an explanation should be provided detailing negotiation efforts.

4. If a low bid SLBE is rejected or deemed unqualified the contractor must provide an explanation and supporting documentation for this decision.

5. Prime should break down portions of work into economical feasible opportunities for subcontracting. The SLBE directory can be useful in identifying additional subcontracting opportunities and firms not listed in the "SLBE Goal Setting Firms List."

6. Contractor should not preclude SLBEs from bidding on any part of work, even if the Contractor can self-perform the work.

7. Contractor should avoid relying solely on subcontracting out work where availability is not sufficient to attain pre-determined goal.

8. In its solicitations, the Bidder should offer assistance to SLBEs in obtaining bonding, insurance, etc, if required of subcontractors by the City or Prime Contractor.

9. In its solicitation, the Bidder should offer assistance in obtaining equipment for a specific job to SLBEs, if needed.

10. Contractor should use the services offered by such agencies as the Minority Business Development Office of the City of Tampa, Hillsborough County and the NAACP Empowerment Center for the recruitment and placement of SLBEs.

City of Tampa –DMI -Schedule of All Sub-(Contractors/Consultants/Suppliers) Solicited

(FORM MBD-10)

Contract No.:_____ Contract Name:_____

Contractor Name:_____ Address:_____

Federal ID:_____Phone:_____ Fax:_____ Email:_____

[] No Firms were contacted/solicited for this contract.

[] No Firms were contacted because:_____

[] See attached documents with supplemental information.

NIGP Code General Categories: Buildings = 909, General = 912, Heavy = 913, Trades = 914, Architects = 906, Engineers & Surveyors = 925, Supplier = 912-77

This DMI Schedule Must Be Submitted with the Bid or Proposal (Do Not Modify This Form)

S = SLBE W=WMBE Federal ID	Company Name Address Phone & Fax	Type of Ownership (F=Female M=Male) BF BM = African Am. HF HM = Hispanic Am. AF AM = Asian Am. NF NM = Native Am. CF CM = Caucasian	Trade or Services NIGP Code (listed above)	Contact Method L=Letter F=Fax E=Email P=Phone	Quote or Resp. Rec'd Y/N

It is hereby certified that the information provided is an accurate and true account of contacts and solicitations for sub – contracting opportunitieson this contract. ***This form must be completed and submitted with the bid or proposal***.Modifying or failing to sign DMI forms may result in Non-Compliance and/or deemed non-responsive.

Signed:_____ Name/Title:_____ Date:_____

Note: Detailed Instructions for completing this form are on the next page

Instructions for completing The Sub-(Contractors/Consultants/ Suppliers) Solicited Form (Form MBD-10)

This form must be submitted with all bids or proposals. All subcontractors (regardless of ownership or size) solicited and subcontractors from whom unsolicited quotations were received must be included on this form. The instructions that follow correspond to the headings on the form required to be completed.Note: Ability or desire to self-perform all work shall not exempt the prime from Good Faith Efforts when Goal has been established.

- **Contract No.** This is the number assigned by the City of Tampa for the bid or proposal.
- **Contract Name.** This is the name of the contract assigned by the City of Tampa for the bid or proposal.
- **Contractor Name.** The name of your business.
- **Address.** The physical address of your business.
- **Federal ID.**FIN. A number assigned to your business for tax reporting purposes.
- **Phone.** Telephone number to contact business.
- **Fax.** Fax number for business.
- **Email.** Provide email address for electronic correspondence.
- **No Firms were contacted/solicited for this contract.** Checking the box indicates that a pre-determined Subcontract Goal was not set by the City resulting in your business not using subcontractors and will self-perform all work. If during the performance of the contract you employ subcontractors, the City must pre-approve subcontractors. Use of the "Sub-(Contractors/Consultants/Suppliers) Payments" form must be submitted with your invoices. Note: Certified SLBE or WMBE firms bidding as Primes are not exempt from outreach and solicitation of subcontractors.
- **No Firms were contacted because.** Provide brief explanation why no firms were contacted/solicited.
- **See attached documents.**Check box, if after you have completed the DMI Form in its entirety, you are providing any additional documentation relating to the form.All DMI data not submitted on the MBD Form-10 must be in the same format and have all requested data from MBD Form-10 included.

The following instructions are for information of any and all subcontractors solicited.

- **"S" = SLBE, "W" = WMBE.** Enter "**S**" for firms Certified by the City as Small Local Business Enterprises and/or "**W**" for firms Certified by the City as Women/Minority Business Enterprise.
- **Federal ID.**FIN. A number assigned to a business for tax reporting purposes. This information is critical in proper identification of the subcontractor.
- **Company Name, Address, Phone & Fax**. Provide company information for verification of payments.
- **Type of Ownership.** Indicate the Ethnicity and Gender of the owner of the subcontracting business.
- **Trade, Services, or Materials** Indicate the trade, service, or material provided by the subcontractor. NIGP codes are listed at top section of document.
- **Contact Method L=letter, F=fax, E=Email, P=Phone.** Indicate with letter the method of soliciting for bid.
- Q**uote or Resp. (response) Rec'd (received) Y/N**. Indicate "Y" Yes if you received a quotation or if you received a response to your solicitation. Indicate "N" No if you received no response to your solicitation from the subcontractor.

If any additional information is required or you have any questions, you may call the Minority Business Development Office at (813) 274-5522.

City of Tampa –DMI Schedule of Sub-(Contractors/Consultants/Suppliers) to be Utilized

(FORM MBD-20)

Contract No.:_____ Contract Name:_____

Contractor Name:_____ Address:_____

Federal ID:_____Phone:_____ Fax:_____ Email:_____

[ ] See attached documents.

[ ] No Subcontracting (of any kind) will be performed on this contract.

NIGP Code General Categories: Buildings = 909, General = 912, Heavy = 913, Trades = 914, Architects = 906, Engineers & Surveyors = 925, Supplier = 912-77

This DMI Schedule Must Be Submitted with the Bid or Proposal (Do Not Modify This Form)

Enter "S" for firms Certified as Small Local Business Enterprises, "W" for firms Certified as Women/Minority Business Enterprise

S = SLBE W=WMBE Federal ID	Company Name Address Phone & Fax	Type of Ownership (F=Female M=Male) BF BM = African Am. HF HM = Hispanic Am. AF AM = Asian Am. NF NM = Native Am. CF CM = Caucasian	Trade, Services, or Materials NIGP Code Listed above	Amount of Quote. Letter of Intent if available.	Percent of Scope/Contract %

Total Subcontract/Supplier Utilization $_____

Total SLBE Utilization $ _____

Total WMBE Utilization $ _____

Percent SLBE Utilization of Total Bid/Proposal Amt. _____% Percent WMBE Utilization of Total Bid/Proposal Amt. _____%

It is hereby certified that the following information is a true and accurate account of utilization for sub-contracting opportunities on this contract. *This form must be completed and submitted with the bid or proposal*. Modifying or failing to sign DMI forms may result in Non-Complianceand/or deemed non-responsive.

Signed:_____ Name/Title:_____ Date:_____

Note: Detailed Instructions for completing this form are on the next page.

Instructions for completing The Sub-(Contractors/Consultants/ Suppliers) to be Utilized Form

(Form MBD-20)

This form must be submitted with all bids or proposals. All subcontractors projected to be utilized must be included on this form.

- **Contract No.** This is the number assigned by the City of Tampa for the bid or proposal.
- **Contract Name.** This is the name of the contract assigned by the City of Tampa for the bid or proposal.
- **Contractor Name.** The name of your business.
- **Address.** The physical address of your business.
- **Federal ID.**FIN. A number assigned to your business for tax reporting purposes.
- **Phone.** Telephone number to contact business.
- **Fax.** Fax number for business.
- **Email.** Provide email address for electronic correspondence.
- **No Subcontracting (of any kind) will be performed on this contract.** Checking box indicates your business will not use subcontractors when no Subcontract Goal has been set by the City, but will self-perform all work. When subcontractors are utilized during the performance of the contract, the "Sub-(Contractors/Consultants/Suppliers) Payments" form must be submitted with your invoices. Note: Certified SLBE or WMBE firms bidding as Primes are not exempt from outreach and solicitation of subcontractors.
- **See attached documents.** Check if you have provided any additional documentation relating to the utilization of subcontractors.
-

The following instructions are for information of Any and All subcontractors to be utilized.

- **Federal ID.**FIN. A number assigned to a business for tax reporting purposes. This information is critical in proper identification of the subcontractor.
- **"S" = SLBE, "W" = WMBE.** Enter "**S**" for firms Certified by the City as Small Local Business Enterprises and/or "**W**" for firms Certified by the City as Women/Minority Business Enterprise.
- **Company Name, Address, Phone & Fax**. Provide company information for verification of payments.
- **Type of Ownership.** Indicate the Ethnicity and Gender of the owner of the subcontracting business.
- **Trade, Services, or Materials (NIGP code if Known)** Indicate the trade, service, or material provided by the subcontractor. NIGP codes are available at http:/www.tampagov.net/mbd.
- **Amount of Quote, Letters of Intent** (required for both SLBEs and WMBEs)
- **Percent of Work/Contract.** Indicate the percent of the total contract price the subcontract(s) represent.
- **Total Subcontract/Supplier Utilization.** – Provide total dollar amount of all subcontractors/suppliers projected to be used for the contract. (Dollar amounts may not apply to CCNA proposals.)
- **Total SLBE Utilization.** Provide total dollar amount for all projected SLBE subcontractors/Suppliers used for this contract. (Dollar amounts may not apply to CCNA proposals.)
- **Total WMBE Utilization.** Provide total dollar amount for all projected WMBE subcontractors/Suppliers used for this contract. (Dollar amounts may not apply to CCNA proposals.)
- **Percent SLBE Utilization.** Total amount allocated to SLBEs divided by the total bid amount. (Dollar amounts may not apply to CCNA proposals.)
- **Percent WMBE Utilization.** Total amount allocated to WMBEs divided by the total bid/proposal amount. (Dollar amounts may not apply to CCNA proposals.)

If any additional information is required or you have any questions, you may call the Minority Business Development Office at (813) 274-5522.

TAMPA BID BOND
Contract 14-C-00049; Wayne C. Papy Center Addition and Renovation

KNOW ALL MEN BY THESE PRESENTS, that we, _____

_____

(hereinafter called the Principal) and _____

(hereinafter called the Surety) a Corporation chartered and existing under the laws of the State of _____, with its principal offices in the City of _____, and authorized to do business in the State of Florida, are held and firmly bound unto the City of Tampa, a Municipal Corporation of Hillsborough County, Florida, in the full and just sum of 5% of the amount of the (Bid) (Proposal) good and lawful money of the United States of America, to be paid upon demand of the City of Tampa, Florida, to which payment will and truly to be made we bind ourselves, our heirs, executors, administrators, successors, and assigns, jointly and severally and firmly these presents.

WHEREAS, the Principal is about to submit, or has submitted to the City of Tampa, Florida, a Proposal for the construction of certain facilities for the City designated Contract 14-C-00049, Wayne C. Papy Center Addition and Renovation.

WHEREAS, the Principal desires to file this Bond in accordance with law, in lieu of a certified Bidder's check otherwise required to accompany this Proposal.

NOW, THEREFORE: The conditions of this obligation are such that if the Proposal be accepted, the Principal shall, within twenty (20) days after the date of receipt of written Notice of Award, execute a contract in accordance with the Proposal and upon the terms, conditions and price set forth therein, in the form and manner required by the City of Tampa, Florida and execute a sufficient and satisfactory Public Construction Bond payable to the City of Tampa, Florida in an amount of one hundred percent (100%) of the total contract price, in form and with security satisfactory to said City, then this Bid Bond obligation is to be void; otherwise to be and remain in full force and virtue in law, and the Surety shall, upon failure of the Principal to comply with any or all of the foregoing requirements within the time specified above, immediately pay to the aforesaid City, upon demand, the amount thereof, in good and lawful money of the United States of America, not as a penalty, but as liquidated damages.

IN TESTIMONY THEREOF, the Principal and Surety have caused these presents to be duly signed and sealed this _____ day of _____, 20___.

Principal _____

BY _____

TITLE _____

BY _____

TITLE _____

(SEAL) _____
Producing Agent

_____
Producing Agent's Address

_____
Name of Agency

_____
The addition of such phrases as "not to exceed" or like import shall render the (Bid) (Proposal)non-responsive.

AGREEMENT

For furnishing all labor, materials and equipment, together with all work incidental thereto, necessary and required for the performance of the work for the construction of Contract 14-C-00049 in accordance with your Proposal dated _____, amounting to a total of $_____ as completed in accordance with subsections I-2.09 and I-2.10 of the Instruction to Bidders.

THIS AGREEMENT, made and entered into in triplicate, this ____ day of _____, 20___, between the City of Tampa, Florida, hereinafter called the City, and hereinafter called the Contractor.

WITNESSETH that, in consideration of the mutual stipulations, agreements, and covenants herein contained, the parties hereto have agreed and hereby agree with each other, the Party of the First Part for itself, its successors and assigns, and the Party of the Second Part for itself, or himself, or themselves, and its successors and assigns, or his or their executors, administrators and assigns, as follows:

Contract 14-C-00049; Wayne C. Papy Center Addition and Renovation, shall include, but not be limited to, construction of a 1,000 sf lobby addition with a steel frame superstructure, curtain wall exterior finish, standing seam metal and modified bitumen roofs, HVAC system, interior metal stud framing, drywall, finishes, painting, plumbing, electrical with all associated work required for a complete project in accordance with the Contract Documents.

Contract Documents referred to in Article 1.01 of this Agreement also includes this volume, applicable standard drawings, the plans and any provisions referred to whether actually attached or not.

TAMPA AGREEMENT

SECTION 1
GENERAL

ARTICLE 1.01 THE CONTRACT

Except for titles, subtitles, headings, running headlines, and tables of contents (all of which are printed herein merely for convenience), the following, except for such portions thereof as may be specifically excluded, constitute the Contract:

The Notice to Bidders;
The Instructions to Bidders, including Special Instructions and General Instructions;
The Proposal;
The Bid Bond;
The Certification of Nonsegregated Facilities;
The Notice of Award;
The Agreement;
The Performance Bond;
The Notice To Proceed;
The Specifications, including the General Provisions, the Workmanship and Materials, the Specific Provisions or the Contract Items
The Plans;
All Supplementary Drawings Issued after award of the Contract;
All Addenda issued by the City prior to the receipt of proposals;
All provisions required by law to be inserted in this Contract, whether actually inserted or not.

ARTICLE 1.02 DEFINITIONS

The following words and terms, or pronouns used in their stead, shall, wherever they appear in this Contract, be construed as follows, unless different meaning is clear from the context:

(a)"City" shall mean the City of Tampa, Florida, represented by its Mayor and City Council, Party of the First Part, or such other City official as shall be duly empowered to act for the City on matters relating to this Contract.

(b)"Contractor" shall mean the Party of the Second Part hereto, whether corporation, firm or individual, or any combination thereof, and its, their, or his successors, personal representatives, executors, administrators, and assigns, and any person, firm or corporation who or which shall at any time be substituted in the place of the Party of the Second Part under this Contract.

(c)"Engineer" shall mean the Director of the Department or his duly authorized representative.

(d)"Consultant" shall mean the engineering or architectural firm or individual employed by the City to consult with and advise the City in the construction of the project.

(e)"Surety" shall mean any person, firm or corporation that has executed as Surety the Contractor's Performance Bond securing the performance of this Contact.

(f)"The Work" shall mean everything expressly or implied required to be furnished and done by the Contractor under the Contract, and shall include both Contract Work and Extra Work.

(g)"Contract Work" shall mean everything expressly or implied required to be furnished and done by the Contractor by any one or more of the Contract parts referred to in Article 1.01 hereof, except Extra Work, as hereinafter defined; it being understood that, in case of any inconsistency in or between any part or parts of this Contract, the Engineer shall determine which shall prevail.

(h)"Contract" or "Contract Documents" shall mean each of the various part of the Contract referred to in Article 1.01 hereof, both as a whole and severally.

(i)"Extra Work" shall mean work other than that required either expressly or implied by the contract in its present form.

(j)"Plans" shall mean only those drawings specifically referred to as such in these documents, or in any Addendum. Drawings issued after the execution of the Contract to explain further, or to illustrate, or to show changes in the work, will be known as "Supplementary Drawings" and shall be binding upon the Contractor with the same force as the Plans.

(k)"Specifications" shall mean all of the directions, requirements, and standards of performance applying to the work, as hereinafter detailed and designated as such, or which may be issued in an addendum.

(l)"Addendum or Addenda" shall mean the additional contract provisions issued in writing prior to the receipt of bids.

(m)"Notice" shall mean written notice. Notice shall be served upon the Contractor, either personally or by leaving the said notice at his residence or with any employee found on the work, or addressed to the Contractor at the residence or place of business given in his proposal and deposited in a postpaid wrapper in any post office box regularly maintained by the United States Post Office.

(n)"Project" shall mean the entire improvement package or related work. The "project" may consist of several different, but related, contracts.

(o)"Site" shall mean, and be limited to, the area upon or in which the Contractor's operations are carried on and such other appropriate areas as may be designed as such by the Engineer.

(p)"Subcontractor" shall mean any person, firm, or corporation, other than employees of the Contractor, who or which contracts with the Contractor to furnish, or actually furnishes labor, or labor and materials, or labor and equipment or labor, materials, and equipment at the site.

(q)Whenever in the Contract the words "directed", "required", "permitted", "ordered", "designated", "prescribed", and words of like import are used, they shall imply the direction, requirement, permission, order, designation, or prescription of the Engineer; and "approved", "acceptable", "satisfactory", "in the judgement of", and words of like import shall mean approved by, or acceptable to, or satisfactory to, or in the judgment of the Engineer.

(r)Whenever in the Contract the word "day" is used, it shall mean calendar day.

(s)"Final Acceptance" shall mean acceptance of the

work as evidenced by an official resolution of the City. Such acceptance shall be deemed to have taken place only if and when an approving resolution has been adopted by the City Council. The final acceptance shall be signed only after the City has assured itself by tests, inspection, or otherwise, that all of the provisions of the Contract have been carried out to its satisfaction.

(t)"Eastern Standard Time" shall be construed as the time being observed in the City on the day proposals are received or other documents issued or signed.

SECTION 2
POWERS OF THE CITY'S REPRESENTATIVES

ARTICLE 2.01 THE ENGINEER

It is covenanted and agreed that the Engineer, in addition to those matters elsewhere herein expressly made subject to his determination, direction, or approval, shall have the power, subject to such express provisions and limitations herein contained as are not in conflict herewith, and subject to review by the Mayor and City Council:

(a)To monitor the performance of the work.

(b)To determine the amount, kind, quality, sequence, and location of the work to be paid for hereunder and, when completed, to measure such work for payment.

(c)To determine all questions of an engineering character in relation to the work, to interpret the Plans, Specifications and Addenda.

(d)To determine how the work of this Contract shall be coordinated with the work of other contractors engaged simultaneously on this project.

(e)To make minor changes in the work as he deems necessary, provided such changes do not result in a net increase in the cost to the City or to the Contractor of the work to be done under the Contract.

(f)To amplify the Plans, add explanatory information and furnish additional Specifications and Drawings consistent with the intent of the Contract Documents.

The power of the Engineer shall not be limited to the foregoing enumeration, for it is the intent of this Contract that all of the work shall be subject to his determinations and approval, except where the determination or approval of someone other than the Engineer is expressly called for herein and except as subject to review by the Mayor and City Council. All orders of the Engineer requiring the Contractor to perform work as Contract work shall be promptly obeyed by the Contractor.

The Engineer shall not, however, have the power to issue an extra work order, and the performance of such work on the order of the Engineer without previously obtaining written confirmation thereof from the Mayor in accordance with Article 7.02 hereof may constitute a waiver of any right to extra compensation therefor. The Contractor is warned that the Engineer has no power to change the terms and provisions of this Contract, except minor changes where such change results in no net increase in the Contract Price.

ARTICLE 2.02 DIRECTOR

The Director of the Department in addition to those matters expressly made subject to his determination, direction or approval in his capacity as "Engineer", shall also have the power:

(a)To review any and all questions in relation to this Contract and its performance, except as herein otherwise specifically provided, and his determination upon such review shall be final and conclusive upon the Contractor.

(b)With the approval of the Mayor and City Council to authorize modifications or changes in the Contract so as to require: (1) the performance of extra work, or (2) the omission of Contract work whenever he deems it in the interest of the City to do so, or both.

(c)To suspend the whole or any part of the work whenever, in his judgment, such suspension is required: (1) in the interest of the City generally, or (2) to coordinate the work of the various Contractors engaged on this project, or (3) to expedite the completion of the entire project, even though the completion of this particular Contract may be thereby delayed, <u>without compensation to the Contractor for such suspension other than extending the time for the completion of the work, as much as it may have been, in the opinion of the City, delayed by such a suspension.</u>

(d)If, before the final acceptance of all the work contemplated herein, it shall be deemed necessary to take over, use, occupy, or operate any part of the completed or partly completed work, the Engineer shall have the right to do so and the Contractor will not, in any way, interfere with or object to the use, occupation, or operation of such work by the City after receipt of notice in writing from the Engineer that such work or part thereof will be used by the City on and after the date specified in such notice. Such taking over, use, occupancy or operation of any part of the completed or partially completed work shall not constitute final acceptance or approval of any such part of the work.

ARTICLE 2.03 NO ESTOPPEL

The City shall not, nor shall any department, officer, agent, or employee thereof, be bound, precluded, or estopped by any determination, decision, acceptance, return, certificate, or payment made or given under or in connection with this Contract by any officer, agent or employee of the City at any time either before or after final completion and acceptance of the work and payment therefor: (a) from showing the true and correct classification, amount, quality, or character of the work done, or that any determination, decision, acceptance, return certificate or payment is untrue, incorrect or improperly made in any particular, or that the work or any part thereof does not in fact conform to the requirements of the Contract Documents, and (b) from demanding and recovering from the Contractor any overpayments made to him or such damages as it may sustain by reason his failure to comply with the requirements of the Contract of Documents, or both.

ARTICLE 2.04 NO WAIVER OF RIGHTS

Neither the inspection, nor any order, measurements or certificate of the City or its employees, officers, or agents, nor by any order of the City for payment of money, nor any money, nor payments for or acceptance of the whole or any part of the work by the City, nor any extension of time, nor any changes in the Contract, Specifications or Plans, nor any possession by the City or its employees shall operate as a

waiver of any provisions of this Contract, nor any power herein provided nor shall any waiver of any breach of this Contract be held as a waiver of any other subsequent breach.

Any remedy provided in this Contract shall be taken and construed as cumulative, namely, in addition to each and every other suit, action, or legal proceeding. The City shall be entitled as of right to an injunction against any breach of the provisions of this Contract.

SECTION 3
PERFORMANCE OF WORK

ARTICLE 3.01 CONTRACTOR'S RESPONSIBILITY

The Contractor shall do all the work and furnish, at his own cost and expense, all labor, materials, equipment, and other facilities, except as herein otherwise provided, as may be necessary and proper for performing and completing the work under this Contract. The Contractor shall be responsible for the entire work until completed and finally accepted by the City.

The work shall be performed in accordance with the true intent and meaning of the Contract Documents. Unless otherwise expressly provided, the work must be performed in accordance with the best modern practice, with materials as specified and workmanship of the highest quality, all as determined by and entirely to the satisfaction of the Engineer.

Unless otherwise expressly provided, the means and methods of construction shall be such as the Contractor may choose, subject, however, to the approval of the Engineer. Only adequate and safe procedure, methods, structures and equipment shall be used. The Engineer's approval or the Engineer's failure to exercise his right thereon shall not relieve the Contractor of obligations to accomplish the result intended by the Contract, nor shall such create a cause of action for damages.

ARTICLE 3.02 COMPLIANCE WITH LAWS

The Contractor must comply with all local, State and Federal laws, rules, ordinances and regulations applicable to this Contract and to the work done hereunder, and must obtain, at his own expense, all permits, licenses or other authorization necessary for the prosecution of the work.

No work shall be performed under this Contract on Sundays, legal holidays or after regular working hours without the express permission of the Engineer. Where such permission is granted, the Engineer may require that such work be performed without additional expense to the City.

ARTICLE 3.03 INSPECTION

During the progress of the work and up to the date of final acceptance, the Contractor shall, at all times, afford the representatives of the City, the Florida Department of Environmental Regulation, and if applicable, the Federal Environmental Protection Agency and the Federal Department of Labor every reasonable, safe and proper facility for inspecting the work done or being done at the site. The inspection of any work shall not relieve the Contractor of any of his obligations to perform proper and satisfactory work as herein specified. Finished or unfinished work found not to be in strict accordance with the Contract shall be replaced as directed by the Engineer, even though such work may have been previously approved and payment made therefor.

The City shall have the right to reject materials and workmanship which are defective or require their correction. Rejected work and materials must be promptly removed from the site, which must at all times be kept in a reasonably clean and neat condition.

Failure or neglect on the part of the City to condemn or reject bad or inferior work or materials shall not be construed to imply an acceptance of such work or materials, if it becomes evident at any time prior to the final acceptance of the work by the City. Neither shall it be construed as barring the City at any subsequent time from the recovery of damages of such a sum of money as may be needed to build anew all portions of the work in which inferior work or improper materials were used, wherever found.

Should it be considered necessary or advisable by the City at any time before final acceptance of the entire work to make examinations of work already completed, by removing or tearing out all or portions of such work, the Contractor shall, on request, promptly furnish all necessary facilities, labor, and material for that purpose. If such work is found to be defective in any material respect, due to the fault of the Contractor or his subcontractors, he shall defray all expenses of such examination and of satisfactory reconstruction. If, however, such work is found to meet the requirements of the Contract, the cost of examination and restoration of the work shall be considered an item of extra work to be paid for in accordance with the provisions of Article 7.02 hereof.

ARTICLE 3.04 PROTECTION

During performance and until final acceptance, the Contractor shall be under an absolute obligation to protect the finished and unfinished work against any damage, loss, or injury. The Contractor shall take proper precaution to protect the finished work from loss or damage, pending completion and the final acceptance of all the work included in the entire Contract, provided that such precaution shall not relieve the Contractor from any and all liability and responsibility for loss or damage to the work occurring before final acceptance by the City. Such loss or damage shall be at the risk of and borne by the Contractor, whether arising from acts or omissions of the Contractor or others. In the event of any such loss or damage, the Contractor shall forthwith repair, replace, and make good the work without extension of time therefor, except as may be otherwise provided herein.

The provisions of this Article shall not be deemed to create any new right of action in favor of third parties against the Contractor or the City.

ARTICLE 3.05 PRESERVATION OF PROPERTY

The Contractor shall preserve from damage all property along the line of the work, or which is in the vicinity of or is in anywise affected by the work, the removal or destruction of which is not called for by the Plans. This applies, but is not limited, to the public utilities, trees, lawn areas, building monuments, fences, pipe and underground structures, public streets (except natural wear and tear of streets resulting from legitimate use thereof by the Contractor), and wherever such property is damaged due to the activities of the Contractor, it shall be immediately restored to its original condition by the Contractor and at his own expense.

In case of failure on the part of the Contractor to restore such property, or make good such damage or injury, the City may, upon forty-eight (48) hour written notice, proceed to repair, rebuild, or otherwise restore such property as may be deemed necessary, and the cost thereof will be deducted from any monies due or which may become due the Contractor under this Contract. Nothing in this clause shall prevent the Contractor from receiving proper compensation for the removal, damage, or replacement of any public or private property not shown on the Plans, when this is made necessary by alteration of grade or alignment authorized by the Engineer, provided that such property has not been damaged through fault of the Contractor, his employees or agents.

ARTICLE 3.06 BOUNDARIES
The Contractor shall confine his equipment, apparatus, the storage of materials, supplies and apparatus of his workmen to the limits indicated on the plans, by law, ordinances, permits or direction of the Engineer.

ARTICLE 3.07 SAFETY AND HEALTH REGULATIONS
The Contractor shall comply with the Department of Labor Safety and Health Regulations for construction promulgated under the Occupational Safety and Health Act of 1970 (PL 91- 596) and under Section 107 of the Contract Work Hours and Safety Standards Act (PL91-54).

ARTICLE 3.08 TAXES
All taxes of any kind and character payable on account of the work done and materials furnished under this Contract shall be paid by the Contractor and shall be deemed to have been included in his bid. The laws of the State of Florida provide that sales and use taxes are payable by the Contractor upon the tangible personal property incorporated in the work and such taxes shall be paid by the Contractor and shall be deemed to have been included in his bid.

ARTICLE 3.09 ENVIRONMENTAL CONSIDERATIONS
The Contractor, in the performance of the work under this Contract, shall comply with all Local, State and Federal laws, statutes, ordinances, rules and regulations applicable to protection of the environment; and, in the event he violates any of the provisions of same, he shall be answerable to the Local, State and Federal agencies designated by law to protect the environment. In the event the City receives, from any of the environmental agencies, a citation which is occasioned by an act or omission of the Contractor or his subcontractor or any officers, employees or agents of either, it is understood and agreed that the Contractor shall automatically become a party-respondent under said citation; and the City immediately shall notify the Contractor and provide him with a copy of said citation.

The Contractor shall comply with the requirements of the citation and correct the offending conditions(s) within the time stated in said citation and further shall be held fully responsible for all fines and/or penalties.

SECTION 4
TIME PROVISIONS

ARTICLE 4.01 TIME OF START AND COMPLETION
The Contractor must commence work within thirty (30) days subsequent to the date of the receipt of the "Notice to Proceed" by the City unless otherwise provided in the Specific Provisions and Special Instructions. Time being of the essence of this Contract, the Contractor shall thereafter prosecute the work diligently, using such means and methods of construction as well as secure its full completion in accordance with the requirements of the Contract Documents no later than the date specified therefor, or on the date to which the time for completion may be extended.

The Contractor must complete the work covered by this Contract in the number of consecutive calendar days set forth in the Instructions to Bidders, unless the date of completion is extended pursuant to the provisions of Article 4.05 hereof. The period for performance shall start from the date of signing of this Agreement by the City.

The actual date of completion will be established after a final inspection as provided in Article 4.07 hereof.

ARTICLE 4.02 PROGRESS SCHEDULE
To enable the work to be laid out and prosecuted in an orderly and expeditious manner, the Contractor shall submit to the Engineer a proposed progress schedule within fifteen (15) days after the award of this Contract.

The schedule shall state the Contract starting date, time for completion and date of completion and shall show the anticipated time of starting and completion of each of the various operations to be performed under this Contract, together with all necessary and appropriate information regarding sequence and correlation of work and an estimated time required for the delivery of all materials and equipment required for the work. The proposed schedule shall be revised as directed by the Engineer until finally approved by him, and, after such approval, shall be strictly adhered to by the Contractor. The approved progress schedule may be changed only with the written permission of the Engineer.

If the Contractor shall fail to adhere to the approved progress schedule or the schedule as revised, he shall promptly adopt such other or additional means and methods of construction as will make up for the time lost, and will assure completion in accordance with the contract time.

ARTICLE 4.03 APPROVAL REQUESTS
From time to time, as the work progresses and in the sequence indicated by the approved schedule, the Contractor must submit to the Engineer a specific request, in writing, for each item of information or approval required of him by the Contract. These requests must be submitted sufficiently in advance of the date upon which the information or approval is actually required by the Contractor to allow for the time the Engineer may take to act upon such submissions or resubmissions. The Contractor shall not have any right to an extension of time on account of delays due to his failure to submit his requests for the required information or the required approval in accordance with these requirements.

ARTICLE 4.04 COORDINATION WITH OTHER CONTRACTORS
During progress of the work, other Contractors may be engaged in performing other work on this project or on other projects on the site. In that event, the Contractor shall coordinate the work to be done hereunder with the work of such other Contractors in such manner as the Engineer may direct.

ARTICLE 4.05 EXTENSION OF TIME
If such an application is made, the Contractor shall be entitled to an extension of time for delay in completion of the work should the Contractor be obstructed or delayed in the commencement, prosecution or completion of any part of said work by any act or delay of the City, or by acts or omissions of other Contractors on this project, or by a riot, insurrection, war, pestilence, acts of public authorities, fire, lightning, hurricanes, earthquakes, tornadoes, floods, extremely abnormal and excessive inclement weather as indicated by the records of the local weather bureau for a five-year period preceding the date of the Contract, or by strikes, or other causes, which causes of delay mentioned in this Article, in the opinion of the City, are entirely beyond the expectation and control of the Contractor.

The Contractor shall, however, be entitled to an extension of time for such causes only for the number of days of delay which the City may determine to be due solely to such causes and only to the extent that such occurrences actually delay the completion of the project and then only if the Contractor shall have strictly complied with all of the requirements of Articles 4.01, 4.02, 4.03 and 4.04 hereof. It is hereby understood that the determination by the Engineer as to the order and sequence of the work shall not in itself constitute a basis for extension of time.

The determination made by the City on an application for an extension of time shall be binding and conclusive on the Contractor.

Delays caused by failure of the Contractor's materialmen, manufacturers, and dealers to furnish approved working drawings, materials, fixtures, equipment, appliances, or other fittings on time or failure of subcontractors to perform their work shall not constitute a basis of extension of time.

The Contractor agrees to make no claim for damages for delay in the performance of this Contract occasioned by any act or omission to act of the City or any of its representatives or because of any injunction which may be brought against the City or its representatives and agrees that any such claim shall be fully compensated for by an extension of time to complete performance of the work as provided herein.

ARTICLE 4.06 LIQUIDATED DAMAGES
It is mutually agreed between the parties that time is the essence of this Contract and that there will be on the part of the City considerable monetary damage in the event the Contractor should fail to complete the work within the time fixed for completion in the Contract or within the time to which such completion may have been extended.

The amount per day set forth in the Instructions to Bidders is hereby agreed upon as the liquidated damages for each and every calendar day that the time consumed in completing the work under this Contract exceeds the time allowed.

This amount shall, in no event, be considered as a penalty or otherwise than as the liquidated and adjusted damages to the City because of the delay and the Contractor and his Surety agree that the stated sum per day for each such day of delay shall be deducted and retained out of the monies which may become due hereunder and if not so deductible, the Contractor and his Surety shall be liable therefor.

ARTICLE 4.07 FINAL INSPECTION
When the work has been completed in accordance with the requirements of the Contract and final cleaning up performed, a date for final inspection of the work by the Engineer shall be set by the Contractor in a written request therefor, which date shall be not less than ten (10) days after the date of such request. The work will be deemed complete as of the date so set by the Contractor if, upon such inspection, the Engineer determines that no further work remains to be done at the site.

If such inspection reveals interms of work still to be performed, however, the Contractor shall promptly perform them and then request a reinspection. If, upon such inspection, the Engineer determines that the work is complete, the date of final completion shall be deemed to be the last day of such reinspection.

SECTION 5
SUBCONTRACTS AND ASSIGNMENTS

ARTICLE 5.01 LIMITATIONS AND CONSENT
The Contractor shall not assign, transfer, convey, sublet or otherwise dispose of this Contract or of his right, title, or interest therein, or his power to execute such Contract, or to assign any monies due or to become due thereunder to any other person, firm or corporation unless the previous written consent of the City shall first be obtained thereto and the giving of any such consent to a particular subcontract or assignment shall not dispense with the necessity of such consent to any further or other assignment.

Before making any subcontract, the Contractor must submit a

written statement to the Engineer, giving the name and address of the proposed contractor, the portion of the work and materials which he is to perform and furnish and any other information tending to prove that the proposed subcontractor has the necessary facilities, skill, integrity, past experience and financial resources to perform the work in accordance with the terms and conditions of this Contract.

If the City finds that the proposed subcontractor is qualified, the Contractor will be notified in writing. The City may revoke approval of any subcontractor when such subcontractor evidences an unwillingness or inability to perform his work in strict accordance with these Contract Documents. Notice of such revocation of approval will be given in writing to the Contractor.

The Contractor will promptly, upon request, file with the City a conformed copy of the subcontract. The Contractor shall cause appropriate provisions to be inserted in all subcontracts relative to the work to bind subcontractors to the Contractor by the terms of these Contract Documents, insofar as applicable to the work of subcontractors, and to give the Contractor the same power as regards terminating any subcontracts that the City may exercise over the Contractor under provisions of these Contract Documents.

The Contractor shall be required to perform with his own forces at least twenty-five (25) percent of the work, unless written consent to subcontract a greater percentage of the work is first obtained from the City.

ARTICLE 5.02 RESPONSIBILITY
The approval by the City of a subcontractor shall not relieve the Contractor of any of his responsibilities, duties, and liabilities hereunder. The Contractor shall be solely responsible to the City for the acts or defaults or omissions of his subcontractor and of such subcontractor's officers, agents, and employees, each of whom shall for all purposes be deemed to be the agent or employee of the Contractor. Nothing contained in the Contract Documents shall create any contractual relationship between any subcontractor and the City.

SECTION 6
SECURITY AND GUARANTY

ARTICLE 6.01 CONTRACT SECURITY
The Contractor shall execute and deliver to the City a Performance Bond on the form as provided herein, in an amount at least equal to one hundred (100) percent of the full Contract price, such Bond to be executed by a surety company acceptable to the City. The surety on such Performance Bond shall be a surety company duly authorized to do business in the State of Florida, and the Bond shall be issued or countersigned by a local resident producing agent of such surety company who is a resident of the State of Florida, regularly commissioned and licensed in said State, and satisfactory evidence of the authority of the person or persons executing such Bond shall be submitted with the Bond. The Performance Bond shall serve as security for the faithful performance of this Contract, including maintenance and guaranty provisions, and for the payment of all persons performing labor and furnishing materials in connection with the Contract. The premiums on the Performance Bond shall be paid by the Contractor.

If, at any time, the City shall become dissatisfied with any surety or sureties then upon the Performance Bond, or if for any other reason such bond shall cease to be adequate security for the City, the Contractor shall, within five days after notice so to do, substitute an acceptable Bond in such form and sum and signed by such other sureties as may be satisfactory to the City. The premiums on such Bond shall be paid by the Contractor. No further partial payments shall be deemed due or shall be made until the new sureties have qualified.

ARTICLE 6.02 CONTRACTORS INSURANCE
Insurance required shall be as indicated on Special Instructions pages beginning with "INS-1"

ARTICLE 6.03 AGAINST CLAIMS AND LIENS
The City may withhold from the Contractor as much as any approved payments to him as may, in the opinion of the City, be necessary to secure (a) just claims of any persons supplying labor or materials to the Contractor or any of his subcontractors for the work then due and unpaid; (b) loss due to defective work not remedied, or (c) liability, damage, or loss due to injury to persons or damages to the work or property of other contractors, subcontractors, or others, caused by the act or neglect of the Contractor or of any of his subcontractors. The City shall have the right, as agent for the Contractor, to apply any such amounts so withheld in such manner as the City may deem proper to satisfy such claims or to secure such protection. Such application of such money shall be deemed payments for the account of the Contractor.

ARTICLE 6.04 MAINTENANCE AND GUARANTY
The Contractor hereby guarantees all the work furnished under this Contract against any defects in workmanship and materials for a period of one year following the date of final acceptance of the work by the City. Under this guarantee, the Contractor hereby agrees to make good, without delay, at his own expense, any failure of any part of the work due to faulty materials or manufacture, construction, or installation, or the failure of any equipment to perform satisfactorily all the work put upon it within the limits of the Contract Documents, and further, shall make good any damage to any part of the work caused by such failure. It is hereby agreed that the Performance Bond shall fully cover all guarantees contained in this Article.
It is also agreed that all warranties, expressed or implied, inure to the benefit of the City and are enforceable by the City.

SECTION 7
CHANGES

ARTICLE 7.01 MINOR CHANGES
The City reserves the right to make such additions, deductions, or changes to this Contract from time to time as

it deems necessary and in a manner not materially affecting the substance thereof or materially changing the price to be paid in order to carry out and complete more fully and perfectly the work herein agreed to be done and performed. This Contract shall in no way be invalidated by any such additions, deductions, or changes, and no claim by the Contractor shall be made for any loss of anticipated profits thereby.

Construction conditions may require that minor changes be made in the location and installation of the work and equipment to be furnished and other work to be performed hereunder, and the Contractor when ordered by the Engineer, shall make such adjustments and changes in said locations and work as may be necessary, without additional cost to the City, provided such adjustments and changes do not alter the character, quantity of cost of the work as a whole, and provided further that Plans and Specifications showing such adjustments and changes are furnished to the Contractor by the City within a reasonable time before any work involving such adjustment and changes is begun. The Engineer shall be the sole judge of what constitutes a minor change for which no additional compensation shall be allowed.

ARTICLE 7.02 EXTRA WORK

The City may at any time by a written order and without notice to the sureties require the performance of such extra work as it may find necessary or desirable. An order for extra work shall be valid only if issued in writing and signed by the Mayor and the work so ordered must be performed by the Contractor.

The amount of compensation to be paid to the Contractor for any extra work as so ordered shall be determined as follows:

(a)By such applicable unit prices, if any, as are set forth in the Proposal; or

(b)If no such unit prices are set forth then by a lump sum or other unit prices mutually agreed upon by the City and the Contractor; or

(c)If no such unit prices are set forth in the Proposal and if the parties cannot agree upon a lump sum or other unit prices then by the actual net cost in money to the Contractor of the extra work performed, which cost shall be determined as follows:

(1) For all labor and foreman in direct charge of the authorized operations, the Contractor shall receive the current local rate of wages to be agreed upon, in writing, before starting such work for each hour that said labor and foremen are actually engaged thereon, to which shall be added an amount equal to 25 percent of the sum thereof which shall be considered and accepted as full compensation for general supervision, FICA taxes, contributions under the Florida Unemployment Compensation Act, insurance, bond, subcontractor's profit and overhead, the furnishing of small tools and miscellaneous equipment used, such as picks, shovels, hand pumps, and similar items.

(2) For all materials used, the Contractor shall receive the actual cost of such materials delivered at the site or previously approved delivery point as established by original receipted bills. No percentage shall be added to this cost.

(3) For special equipment and machinery such as power-driven pumps, concrete mixers, trucks, and tractors, or other equipment, required for the economical performance of the authorized work, the Contractor shall receive payment based on the average local area rental price for each item of equipment and the actual time of its use on the work. No percentage shall be added to this sum.

(4) Records of extra work done under this procedure shall be reviewed at the end of each day by the Contractor or his representative and the Engineer. Duplicate copies of accepted records shall be made and signed by both Contractor or his representative and the Engineer, and one copy retained by each.

Request for payment for approved and duly authorized extra work shall be submitted in the same form as Contract work or in the case of work performed under paragraph (c) (1) above upon a certified statement supported by receipted bills. Such statement shall be submitted for the current Contract payment for the month in which the work was done.

ARTICLE 7.03 DISPUTED WORK

If the Contractor is of the opinion that any work required, necessitated, or ordered violates the terms and provisions of this Contract, he must promptly notify the Engineer, in writing, of his contentions with respect thereto and request a final determination thereof. If the Engineer determines that the work in question is Contract work and not extra work or that the order complained of is proper, he will direct the Contractor to proceed and the Contractor shall promptly comply. In order, however, to reserve his right to claim compensation for such work or damages resulting from such compliance, the Contractor must, within five (5) days after receiving notice of the Engineer's determination and direction, notify the City in writing that the work is being performed or that the determination and direction is being complied with under protest. Failure of the Contractor to notify shall be deemed as a waiver of claim for extra compensation or damages therefor.

Before final acceptance by the City, all matters of dispute must be adjusted to the mutual satisfaction of the parties thereto. Final determinations and decisions, in case any questions shall arise, shall constitute a condition precedent to the right of the Contractor to receive the money therefor until the matter in question has been adjusted.

ARTICLE 7.04 OMITTED WORK

The City may at any time by a written order and without notice to the sureties require the omission of such Contract work as it may find necessary or desirable.

An order for omission of work shall be valid only if signed by the Mayor and the work so ordered must be omitted by the Contractor. The amount by which the Contract price shall be reduced shall be determined as follows:

(a) By such applicable unit prices, if any, as are set forth in the Contract; or

(b) By the appropriate lump sum price set forth in the Contract; or

(c) By the fair and reasonable estimated cost to the City

of such omitted work as determined by the Engineer and approved by the City.

SECTION 8
CONTRACTOR'S EMPLOYEES

ARTICLE 8.01 CHARACTER AND COMPETENCY

The Contractor and his subcontractors shall employ upon all parts of the work herein contracted for only competent, skillful, and trustworthy workers. Should the Engineer at any time give notice, in writing, to the Contractor or his duly authorized representative on the work that any employee in his opinion is incompetent, unfaithful, disorderly, careless, unobservant of instructions, or in any way a detriment to the satisfactory progress of the work, such employee shall immediately be dismissed and not again allowed upon the site.

ARTICLE 8.02 SUPERINTENDENCE

The Contractor shall give his personal supervision to the faithful prosecution of the work and in case of his absence shall have a competent, experienced, and reliable supervisor or superintendent, acceptable to the Engineer on the site who shall follow without delay all instructions of the Engineer in the prosecution and completion of the work and every part thereof, in full authority to supply workers, material, and equipment immediately. He shall keep on hand at all times copies of the Contract Documents.

ARTICLE 8.03 EMPLOYMENT OPPORTUNITIES

The Contractor shall, in the performance of the work required to be done under this Contract, employ all workers without discrimination regarding race, creed, color, sex or national origin and must not maintain or provide facilities that are segregated on the basis of race, color, creed or national origin.

ARTICLE 8.04 RATES OF WAGES

On federally assisted projects, the rates of wages to be paid under this Contract shall not be less than the rates of wages set forth in Section 12 of this Agreement.

On other projects, no wage rate determination is included. Florida's Prevailing Wage Law (Section 215.19, Florida Statutes) was repealed effective April 25, 1979.

ARTICLE 8.05 PAYROLL REPORTS

The Contractor and each subcontractor shall, if requested to do so, furnish to the Engineer a duly certified copy of his payroll and also any other information required by the Engineer to satisfy him that the provisions of the law as to the hours of employment and rate of wages are being observed.

Payrolls shall be prepared in accordance with instructions furnished by the City and on approved forms. The Contractor shall not carry on his payroll any persons not employed by him. Subcontractor's employees shall be carried only on the payrolls of the employing subcontractor.

SECTION 9
CONTRACTOR'S DEFAULT

ARTICLE 9.01 CITY'S RIGHT AND NOTICE

It is mutually agreed that: (a) if the Contractor fails to begin work when required to do so, or (b) if at any time during the progress of the work it shall appear to the Engineer that the Contractor is not prosecuting the work with reasonable speed, or is delaying the work unreasonably and unnecessarily, or (c) if the force of workmen or quality or quantity of material furnished are not sufficient to insure completion of the work within the specified time and in accordance with the Specifications hereto attached, or (d) if the Contractor shall fail to make prompt payments for materials or labor or to subcontractors for work performed under the Contract, or (e) if legal proceedings have been instituted by others than the City in such manner as to interfere with the progress of the work and may subject the City to peril of litigation or outside claims of (f) if the Contractor shall be adjudged a bankrupt or make an assignment for the benefit of creditors, or (g) if in any proceeding instituted by or against the Contractor an order shall be made or entered granting an extension of time of payment, composition, adjustment, modification, settlement or satisfaction of his debts or liabilities, or (h) if a receiver or trustee shall be appointed for the Contractor or the Contractor's property, or (i) if the Contract or any part thereof shall be sublet without the consent of the City being first obtained in writing, or (j) if this Contract or any right, monies, or claim thereunder shall be assigned by the Contractor, otherwise than as herein specified, or (k) if the Contractor shall fail in any manner of substance to observe the provisions of this Contract, or (l) if any of the work, machinery, or equipment shall be defective, and shall not be replaced as herein provided, or (m) if the work to be done under this Contract shall be abandoned, then such fact or conditions shall be certified by the Engineer and thereupon the City without prejudice to any other rights or remedies of the City, shall have the right to declare the Contractor in default and so notify the Contractor by a written notice, setting forth the ground or grounds upon which such default is declared and the Contractor must discontinue the work, either as a portion of the work or the whole thereof, as directed.

ARTICLE 9.02 CONTRACTOR'S DUTY UPON DEFAULT

Upon receipt of notice that his Contract is in default, the Contractor shall immediately discontinue all further operations on the work or such part thereof, and shall immediately quit the site or such part thereof, leaving untouched all plant, materials, equipment, tools, and supplies.

ARTICLE 9.03 COMPLETION OF DEFAULTED WORK

The City, after declaring the Contractor in default, may then have the work completed or the defective equipment or machinery replaced or anything else done to complete the work in strict accordance with the Contract Documents by such means and in such manner, by Contract with or without public letting, or otherwise, as it may deem advisable,

utilizing for such purpose without additional cost to the City such of the Contractor's plant, materials, equipment, tools, and supplies remaining on the site, and also such subcontractors as it may deem advisable.

The City shall reimburse all parties, including itself, for the expense of such completion, including liquidated damages, if any, and the cost of reletting. The City shall deduct this expense from monies due or to become due to the Contractor under this Contract, or any part thereof, and in case such expense is more than the sum remaining unpaid of the original contract price, the Contractor and his sureties shall pay the amount of such deficiency to the City.

ARTICLE 9.04 PARTIAL DEFAULT
In case the City shall declare the Contractor in default as to a part of the work only, the Contractor shall discontinue such part, shall continue performing the remainder of the work in strict conformity with the terms of the Contract, and shall in no way hinder or interfere with any other contractor or person whom the City may engage to complete the work as to which the Contractor was declared in default.

SECTION 10
PAYMENTS

ARTICLE 10.01 PRICES
For the Contractor's complete performance of the work, the City will pay and the Contractor agrees to accept, subject to the terms and conditions hereof, the lump sum prices or unit prices in the Contractor's Proposal and the award made therein, plus the amount required to be paid for any extra work ordered under Article 7.02 hereof, less credit for any work omitted pursuant to Article 7.04 hereof. Under unit price items, the number of units actually required to complete the work under the Contract may be more than stated in the Proposal. The Contractor agrees that no claim will be made for any damages or for loss of profits because of a difference between the quantities of the various classes of work assumed and stated in the Proposal Form as a basis for comparing Proposals and the quantities of work actually performed.

The sum as awarded for any lump sum Contract or lump sum Contract Item shall represent payment in full for all of the various classes of work, including materials, equipment, and labor necessary or required to complete, in conformity with the Contract Document, the entire work shown, indicated or specified under the lump sum Contract or lump sum Contract Item.

The amount as awarded as a unit price for any unit price Contact Item shall represent payment in full for all the materials, equipment, and labor necessary to complete, in conformity with the Contract Documents, each unit of work shown, specified, or required under the said unit price Contract Item.

No payment other than the amount as awarded will be made for any class of work included in a lump sum Contract Item or a unit price Contract Item, unless specific provision is made therefor in the Contract Documents.

ARTICLE 10.02 SUBMISSION OF BID BREAKDOWN
Within fifteen (15) days after the execution of this Contract, the Contractor must submit to the Engineer in duplicate an acceptable breakdown of the lump sums and unit prices bid for items of the Contract, showing the various operations to be performed under the Contract, as described in the progress schedule required under Article 4.02 hereof, and the value of each of such operations, the total of such items to equal the total price bid. The Contractor shall also submit such other information relating to the bid prices as may be required and shall revise the bid breakdown as directed. Thereafter, the breakdown may be used for checking the Contractor's applications for partial payments hereunder but shall not be binding upon the City or the Engineer for any purpose whatsoever.

ARTICLE 10.03 REPORTS, RECORDS AND DATA
The Contractor shall furnish to the Engineer such schedules of quantities and costs, progress schedules, reports, invoices, delivery tickets, estimates, records, and other data as the Engineer may request concerning work performed or to be performed and the materials furnished under the Contract.

ARTICLE 10.04 PAYMENTS BY CONTRACTOR
The Contractor shall pay (a) for all transportation and utility services not later than the 20th day of the calendar month following that in which such services are rendered, (b) for all materials, tools, and equipment delivered at the site of the project, and the balance of the cost thereof not later than the 30th day following the completion of that part of the work in or on which such materials, tools, and equipment are incorporated or used, and (c) to each of his subcontractors, not later than the 5th day following each payment to the Contractor, the respective amounts allowed the Contractor on account of the work performed by his subcontractors, to the extent of each subcontractor's interest therein; and proof of such payments or releases therefor shall be submitted to the Engineer upon request.

ARTICLE 10.05 PARTIAL PAYMENTS
On or about the first of each month, the Contractor shall make and certify an estimate, on forms prescribed by the City, of the amount and fair value of the work done, and may apply for partial payment therefor. The Contractor shall revise the estimate as the Engineer may direct. When satisfactory progress has been made, and shows that the value of the work completed since the last payment exceeds one percent (1%) of the total Contract price in amount, the Engineer will issue a certificate that such work has been completed and the value thereof. The City will then issue a voucher to the Contractor in accordance with the following schedule:

FOR CONTRACT AMOUNTS UNDER $250,000
(A)In the amount of ninety percent (90%) of the value of the work completed as certified until construction is one hundred percent (100%) complete (operational or beneficial occupancy), the withheld amount may be reduced below ten percent (10%), at the Engineer's option, to only that amount necessary to assure completion.

FOR CONTRACT AMOUNTS OVER $250,000

(A)In the amount of ninety percent (90%) of the value of the work completed as certified until construction is fifty percent (50%) complete.

(B)When the dollar value, as determined by the Engineer, of satisfactorily completed work in place is greater than fifty percent (50%) of the original contract price, vouchers for partial payment will be issued by the City to the Contractor in the amount of one hundred percent (100%) of the value of the work, above 50%, completed as certified for that payment period.

(C)If the Contractor has performed satisfactorily and the work is substantially complete (operational or beneficial occupancy) the withheld amount may be reduced, at the Engineer's option, to only that amount necessary to assure completion.

In addition to the Conditions set forth in (A), (B), and (C) above, payments will always be less any sums that may be retained or deducted by the City under the terms of any of the contract documents and less any sums that may be retained to cover monetary guarantees for equipment, materials or progress performance.

Payment on estimates made on or about the first of the month may be expected on or about the 20th of the month.

Unless specified otherwise in the Contract Items, the delivered cost of equipment and nonperishable materials suitably stored at the site of the work and tested for adequacy may be included in the Contractor's application for partial payment provided, however, that the Contractor shall furnish evidence satisfactory to the City that the Contractor is the unconditional owner and in possession of such materials or equipment. The amount to be paid will be 90 percent of the invoice cost to the Contractor which cost shall be supported by receipted bills within 30 days of the date of payment by the City to the Contractor. Such payment shall not relieve the Contractor from full responsibility for completion of the work and for protection of such materials and equipment until incorporated in the work in a permanent manner as required by the Contract Documents.

Before any payment will be made under this Contract, the Contractor and every subcontractor, if required, shall deliver to the Engineer a written, verified statement, in satisfactory form, showing in detail all amounts then due and unpaid by such Contractor or subcontractor to all laborers, workmen, and mechanics, employed by him under the Contract for the performance of the work at the site thereof, for daily or weekly wages, or to other persons for materials, equipment, or supplies delivered at the site of the work during the period covered by the payment under consideration.

ARTICLE 10.06 FINAL PAYMENT

Under determination of satisfactory completion of the work under this Contract as provided in Article 4.07 hereof, the Engineer will prepare the final estimate showing the value of the completed work. This estimate will be prepared within 30 days after the date of completion or as soon thereafter as the necessary measurements and computations can be made. All prior certificates and estimates, being approximate only, are subject to correction in the final estimate and payment.

When the final estimate has been prepared and certified by Engineer, he will submit to the Mayor and City Council the final certificate stating that the work has been completed and the amount based on the final estimate remaining due to the Contractor. The City will then accept the work as fully completed and will, not later than 30 days after the final acceptance, as defined in Article 1.02, of the work done under this Contract, pay the Contractor the entire amount so found due thereunder after deduction of all previous payments and all percentages and amounts to be kept and retained under provisions of this Contract; provided, however, and it is understood and agreed that, as a precedent to receiving final payment, the Contractor shall submit to the City a sworn affidavit that all bills for labor, service, materials, and subcontractors have been paid and that there are no suits pending in connection with this work. The City, at its option, may permit the Contractor to execute a separate surety bond in a form satisfactory to the City. The surety bond shall be in the full amount of the suit or suits.

Neither the final payment nor any part of the retained percentage shall be paid until the Contractor, if required, shall furnish the City with a complete release from any should remain unsatisfied after all payments are made, the Contractor shall refund to the City all monies which the City may be compelled to pay in discharging such claim, including incidental costs and attorney's fees.

ARTICLE 10.07 ACCEPTANCE OF FINAL PAYMENT

The acceptance by the Contractor, or by anyone claiming by or through him, of the final payment shall operate as and shall be a release to the City and every officer and agent thereof from any and all claims and liability to the Contractor for anything done or furnished in connection with the work or project and for any act or neglect of the Contractor or of any others relating to or affecting the work. No payment, however, final or otherwise, shall operate to release the Contractor or his sureties from any obligations under this Contract or the Performance Bond.

SECTION 11
MISCELLANEOUS PROVISIONS

ARTICLE 11.01 CONTRACTOR'S WARRANTIES

In consideration of, and to induce the award of this contract to him, the Contractor represents and warrants:

(a)That he is not in arrears to the City upon debt or contract, and he is not a defaulter, as surety, contractor, or otherwise.

(b)That he is financially solvent and sufficiently experienced and competent to perform the work.

(c)That the work can be performed as called for by the Contract Documents.

(d)That the facts stated in his proposal and the information given by him are true and correct in all respects.

(e)That he is fully informed regarding all the conditions affecting the work to be done and labor and materials to be

furnished for the completion of this Contract, and that his information was secured by personal investigation and research.

ARTICLE 11.02 PATENTED DEVICES, MATERIAL AND PROCESSES

It is mutually understood and agreed that Contract prices include all royalties and costs arising from patents, trademarks, and copyrights in any way involved in the work. Whenever the Contractor is required or desires to use any design, device, material, or process covered by letters of patent or copyright, the Contractor shall indemnify and save harmless the City, its officers, agents and employees from any and all claims for infringement by reason of the use of any such patented design, device, tool, material, equipment, or process, to be performed under the Contract, and shall indemnify the said City, its officers, agents, and employees for any costs, expenses, and damages which may be incurred by reason of such infringement at any time during the prosecution or after completion of the work.

ARTICLE 11.03 SUITS AT LAW

In case any action at law or suit in equity may or shall be brought against the City or any of its officers, agents, or employees for or on account of the failure, omission, or neglect of the Contractor or his subcontractors, employees, or agents, to do or perform any of the covenants, acts, matters, or things by this Contract undertaken to be done or performed by the Contractor of his subcontractors, employees, or agents, or from any injuries done to property or persons and caused by the negligence or alleged negligence of the Contractor of his subcontractors, employees, or agents, or in any other manner arising out of the performance of this Contract, then the Contractor shall immediately assume and take charge of the defense of such actions or suits in like manner and to all intents and purposes as if said actions or suits have been brought directly against the Contractor, and the Contractor shall also indemnity and save harmless the City, its officers, agents, and employees from any and all loss, cost or damage whatever arising out of such actions or suits, in like manner and to all intents and purposes as if said actions or suits have been brought directly against the Contractor.

The Contractor shall and does hereby assume all liability for and agrees to indemnify the City or its Engineer against any or all loss, costs, damages, and liability for any or by reason of any lien, claims or demands, either for materials purchased or for work performed by laborers, mechanics, and others and from any damages, costs, actions, or causes of action and judgement arising from injuries sustained by mechanics, laborers, or other persons by reason of accidents or otherwise, whether caused by the carelessness or inefficiency or neglect of said Contractor, his subcontractors, agents, employees, workmen or otherwise.

ARTICLE 11.04 CLAIMS FOR DAMAGES

If the Contractor shall claim compensation for any damage sustained, other than for extra or disputed work covered by Article 7.02 and 7.03 hereof, by reason of any act or omission of the City, its agents, or any persons, he shall, within five days after sustaining such damage, make and deliver to the Engineer a written statement of the nature of the damage sustained and of the basis of the claim against the City. On or before the 15th of the month succeeding that in which any damage shall have been sustained, the Contractor shall make and deliver to the Engineer an itemized statement of the details and amounts of such damage, duly verified by the Contractor. Unless such statements shall be made delivered within the times aforesaid, it is stipulated that and all claims for such compensation shall be forfeited and invalidated, and the Contractor shall not be entitled to payment on account of such claims.

ARTICLE 11.05 NO CLAIMS AGAINST INDIVIDUALS

No claim whatsoever shall be made by the Contractor against any officer, agent, employee of the City for, or on account of, anything done or omitted to be done in connection with this Contract.

ARTICLE 11.06 LIABILITY UNAFFECTED

Nothing herein contained shall in any manner create any liability against the City on behalf of any claim for labor, services, or materials, or of subcontractors, and nothing herein contained shall affect the liability of the Contractor or his sureties to the City or to any workmen or materialsmen upon bond given in connection with this Contract.

ARTICLE 11.07 INDEMNIFICATION PROVISIONS

Whenever there appears in this Agreement, or in the other Contact Documents made a part hereof, an indemnification provision within the purview of Chapter 725.06, Laws of Florida, the monetary limitation on the extent of the indemnification under each such provision shall be One Million Dollars or a sum equal to the total Contract price, whichever shall be the greater.

ARTICLE 11.08 UNLAWFUL PROVISIONS DEEMED STRICKEN

If this contract contains any unlawful provisions not an essential part of the Contract and which shall not appear to have a controlling or material inducement to the making thereof, such provisions shall be deemed of no effect and shall, upon notice by either party, be deemed stricken from the Contract without affecting the binding force of the remainder.

ARTICLE 11.09 LEGAL PROVISIONS DEEMED INCLUDED

Each and every provision of any law and clause required by law to be inserted in this Contract shall be deemed to be inserted herein, and the Contract shall be read and enforced as though it were included herein and if, through mistake or otherwise, any such provision is not inserted or is not correctly inserted, then upon application of either party the Contract shall forthwith be physically amended to make such insertion.

ARTICLE 11.10 DEATH OR INCOMPETENCY OF CONTRACTOR

In the event of death or legal incompetency of a Contractor who shall be an individual or surviving member of a contracting firm, such death or adjudication of incompetency

shall not terminate the Contract, but shall act as default hereunder to the effect provided in Article 9.01 hereof and the estate of the Contractor and his surety shall remain liable hereunder to the same extent as though the Contractor had lived. Notice of default, as provided in Article 9.01 hereof, shall not be required to be given in the event of such death or adjudication of incompetency.

ARTICLE 11.11 NUMBER AND GENDER OF WORDS
Whenever the context so admits or requires, all references herein in one number shall be deemed extended to and including the other number, whether singular or plural, and the use of any gender shall be applicable to all genders.

ARTICLE 11.12 ACCESS TO RECORDS
Representatives of Federal Agencies, if applicable, and the State of Florida shall have access to the work whenever it is in preparation of progress. On federally assisted projects the Federal Agency, the Comptroller General of the United States, or any authorized representative shall have access to any books, documents, papers, and records of the Contractor which are pertinent to the project for the purpose of making audit, examination, excerpts, and transcription thereof.

SECTION 12
LABOR STANDARDS

ARTICLE 12.01 LABOR STANDARDS
The Contractor shall comply with all of the regulations set forth in "Labor Standards Provisions for Federally Assisted Construction Contracts", which may be attached, and any applicable Florida Statutes.

ARTICLE 12.02 NOTICE TO LABOR UNIONS
If required, the Contractor shall provide Labor Unions and other organizations of workers, and shall post, in a conspicuous place available to employees or applicants for employment, a completed copy of the form entitled "Notice to Labor Unions or Other Organizations of Workers" attached to and made a part of this Agreement.

ARTICLE 12.03 SAFETY AND HEALTH REGULATIONS
The Contractor shall comply with the Department of Labor Safety and Health Regulations for construction promulgated under the Occupational Safety and Health Act of 1970 (PL 91- 596) and under Section 107 of the Contract Work Hours and Safety Standards Act (PL 91-54). Nothing in these Acts shall be construed to supersede or in any manner affect any worker's compensation law or statutory rights, duties, or liabilities of employers and employees under any law with respect to injuries, diseases, or death of employees arising out of, or in the course of, employment.

ARTICLE 12.04 EEO AFFIRMATIVE ACTION REQUIREMENTS
The Contractor understands and agrees to be bound by the equal opportunity requirements of Federal regulations which shall be applicable throughout the performance of work under this Contract. The Contractor also agrees to similarly bind contractually each subcontractor. In policies, the Contractor agrees to engage in Affirmative Action directed at promoting and ensuring equal employment opportunity in the work force used under the Contract (and the Contractor agrees to require contractually the same effort of all subcontractors whose subcontractors exceed $100,000). The Contractor understands and agrees that "Affirmative Action" as used herein shall constitute a good faith effort to achieve and maintain minority employment in each trade in the on-site work force used on the Contract.

ARTICLE 12.05 PREVAILING RATES OF WAGES
Florida's prevailing wage law was repealed effective April 25, 1979.

For Federally assisted projects, appropriate prevailing wage rate determinations are indicated on pages beginning with WR-1.

* * * * * * *

IN WITNESS THEREOF, the parties have hereunto set their hands and seals, and such of them as are corporation have caused these present to be signed by their duly authorized officers.

CITY OF TAMPA, FLORIDA

_____
Bob Buckhorn, Mayor
(SEAL)

ATTEST:

_____
City Clerk

Approved as to Form:
The execution of this document was authorized
by Resolution No. _____

_____
Rachel S. Peterkin, Assistant City Attorney

Contractor

By:_____
(SEAL)

Title:

ATTEST:

_____
Secretary

TAMPA AGREEMENT (ACKNOWLEDGMENT OF PRINCIPAL)

STATE OF)
) SS:
COUNTY OF)

For a Corporation:

STATE OF _____
COUNTY OF _____

The foregoing instrument was acknowledged before me this ___ of _____, 20___ by _____ of _____, a _____ corporation, on behalf of the corporation. He/she is ___ personally known or has ___ produced _____ as identification.

_____
Notary

My Commission Expires:

_____

For an Individual:

STATE OF _____
COUNTY OF _____

The foregoing instrument was acknowledged before me this ___ of _____, 20___ by _____ who is ___ personally known to me or has ___ produced _____ as identification.

_____
Notary

My Commission Expires:

_____

For a Firm:

STATE OF _____
COUNTY OF _____

The foregoing instrument was acknowledged before me this ___ of _____, 20___ by _____ who signed on behalf of the said firm. He/she is ___ personally known or has ___ produced _____ as identification.

_____
Notary

My Commission Expires:

_____

_____

PUBLIC CONSTRUCTION BOND

Bond No. (enter bond number)_____

Name of Contractor:_____

Principal Business Address of Contractor:_____

_____

Telephone Number of Contractor:_____

Name of Surety (if more than one list each):_____

_____

Principal Business Address of Surety:_____

_____

Telephone Number of Surety:_____

Owner is The City of Tampa, Florida

Principal Business Address of Owner: 306 E Jackson St, Tampa, FL 33602

Contract Administration Department (280A4N)

Telephone Number of Owner: 813/274-8456

Contract Number Assigned by City to contract which is the subject of this bond:_____

Legal Description or Address of Property Improved or Contract Number is:_____

_____

_____

_____

General Description of Work and Services:_____

_____

_____

_____

KNOW ALL MEN BY THESE PRESENTS That we, _____

_____
(Name of Contractor)

as Principal, hereinafter called CONTRACTOR, of the State of _____, and

_____(Name of Surety)
a corporation organized and existing under and by virtue of the laws of the State of _____, and regularly authorized to do business in the State of Florida, as SURETY, are held and firmly bound unto the City of Tampa, a municipal corporation organized and existing under the laws of the State of Florida, hereinafter called Owner, in the penal sum of _____Dollars and _____Cents ($_____), lawful money of the United States of America, for the payment whereof well and truly to be made, we bind ourselves, our heirs, executors, and administrators, successors and assigns, jointly and severally, firmly by these presents.

THE CONDITION OF THIS BOND is that if Principal:

1. Performs the contract dated _____, _____, 20___, between Principal and Owner for construction of _____, the contract being made a part of this bond by reference, in the time and in the manner prescribed in the contract; and

2. Promptly makes payments to all claimants, as defined in Section 255.05(1) (Section 713.01), Florida Statutes, supplying Principal with labor, materials, or supplies, used directly or indirectly by Principal in the prosecution of the work provided for in the contract; and

3. Pays Owner all losses, damages, expenses, costs, and attorney's fees, including appellate proceedings, that Owner sustains because of a default by Principal under the contract; and

4. Performs the guarantee of all work and materials furnished under the contract for the time specified in the contract, then this bond is void; otherwise it remains in full force.

5. Contractor and Surety acknowledge that the Work for which this bond has been issued may be one of several such contract documents for a group of projects. This bond does not secure covenants to pay for or to perform design services survey or program management services. The Owner/Obligee is expected to reasonably account for damages that are caused to Owner with respect to Principal's (Contractor's) default in performance of the scope of the Work incorporated by reference into the bond, and notwithstanding any contractual or common law remedy permitted to Owner as against Contractor, the obligation of Surety for any damages under this bond shall be determined by the cost of completion of the Work less the contract balance unpaid upon default of Contractor for the Work plus liquidated damages at the rate of $500.00 per day for delays by the Contractor and/or Surety in reaching substantial completion.

6. The notice requirements for claimants and conditions for entitlement to payment set forth in Section 255.05, Fla. Stat. and the limitations period to actions upon Section 255.05, Fla. Stat. bonds apply to claimants seeking payment from surety under this bond. Any action instituted by a claimant under this bond for payment must be in accordance with the notice and time limitation provisions in Section 255.05, Florida Statutes.

7. The Surety, for value received, hereby stipulates and agrees that no changes, extensions of time, alterations or additions to the terms of the contract documents or other Work to be performed hereunder, or the specifications referred to therein shall in any way affect its obligations under this bond, and it does hereby waive notice of any such changes, extensions of time, alterations or additions to the terms of the Contract or to Work or to the specifications.

8. The above SURETY states that it has read all of the Contract Documents made by the CONTRACTOR with the CITY, hereto attached, and the terms and conditions of the contract and work, and is familiar therewith and in particular those portions of the Agreement concerning the guaranty of such CONTRACTOR for a period of one year following the date of the final acceptance of the completed work under the Contract by the CITY, all of which this BOND includes.

DATED ON _____, 20___

_____
(Name of Principal)

_____
(Principal Business Address)

By _____

Title _____

_____
Telephone Number of Principal

Countersignature:

_____
(Name of Local Agency)

_____
(Address of Resident Agent)

By _____

Title _____

_____
Telephone Number of Local Agency

_____
(Name of Surety)

_____
(Surety Address)

By _____
(As Attorney in Fact)*

_____
Telephone Number of Surety

Accepted by City of Tampa:

By _____
Bob Buckhorn, Mayor

Date: _____ 20____

Approved as to legal sufficiency:

By _____
Assistant City Attorney

Date: _____, 20____

*(As Attorney in Fact) attach Power of Attorney and Current Certificate with Original Signature

SPECIFICATIONS
GENERAL PROVISIONS

SECTION 1
SCOPE AND INTENT

G-1.01 DESCRIPTION
The work to be done consists of the furnishing of all labor, materials and equipment, and the performance of all work included in this Contract.

G-1.02 WORK INCLUDED
The Contractor shall furnish all labor, superintendence, materials, plant, power, light, heat, fuel, water, tools, appliances, equipment, supplies, and other means of construction necessary or proper for performing and completing the work. He shall obtain and pay for all required permits. He shall perform and complete the work in the manner best calculated to promote rapid construction consistent with safety of life and property and to the satisfaction of the Engineer, and in strict accordance with the Contract Documents. The Contractor shall clean up the work and maintain it during and after construction, until accepted, and shall do all work and pay all costs incidental thereto. He shall repair or restore all structures and property that may be damaged or disturbed during performance of the work.

The cost of incidental work described in these General Provisions, for which there are no specific Contract Items, shall be considered as part of the overhead cost of doing the work and shall be included in the prices for the various Contract Items. No additional payment will be made therefor.

The Contractor shall provide and maintain such modern plant, tools, and equipment as may be necessary, in the opinion of the Engineer, to perform in a satisfactory and acceptable manner all the work required by this Contract. Only equipment of established reputation and proven efficiency shall be used. The Contractor shall be solely responsible for the adequacy of his plant and equipment, prior approval of the Engineer notwithstanding.

G-1.03 PUBLIC UTILITY INSTALLATIONS AND STRUCTURES
Public utility installations and structures shall be understood to include all poles, tracks, pipes, wires, conduits, house service connections, vaults, manholes, and all other appurtenances and facilities pertaining thereto whether owned or controlled by the City, other governmental bodies or privately owned by individuals, firms, or corporations, and used to serve the public with transportation, traffic control, gas, electricity, telephone, sewerage, drainage, water or other public or private property which may be affected by the work.

The Contract Documents contain data relative to existing public utility installations and structures above and below the ground surface. These data are not guaranteed as to their completeness or accuracy and it is the responsibility of the Contractor to make his own investigations to inform himself fully of the character, condition and extent of all such installations and structures as may be encountered and as may affect the construction operations.

The Contractor shall protect all public utility installations and structures from damage during the work. Access across any buried public utility installation or structure shall be made only in such locations and by means approved by the Engineer. The Contractor shall so arrange his operations as to avoid any damage to these facilities. All required protective devices and construction shall be provided by the Contractor at his expense. All existing public utilities damaged by the Contractor which are shown on the Plans or have been located in the field by the utility shall be repaired by the Contractor, at his expense, as directed by the Engineer. No separate payment shall be made for such protection or repairs to public utility installations or structures.

Public utility installations or structures owned or controlled by the City or other governmental body which are shown on the Plans to be removed, relocated, replaced or rebuilt by the Contractor shall be considered as a part of the general cost of doing the work and shall be included in the prices bid for the various Contract Items. No separate payment shall be made therefor.

Where public utility installations or structures owned or controlled by the City or other governmental body are encountered during the course of the work, and are not indicated on the Plans or in the Specifications, and when, in the opinion of the Engineer, removal, relocation, replacement or rebuilding is necessary to complete the work under this Contract, such work shall be accomplished by the utility having jurisdiction or such work may be ordered, in writing by the Engineer, for the Contractor to accomplish. If such work is accomplished by the utility having jurisdiction it will be carried out expeditiously and the Contractor shall give full cooperation to permit the utility to complete the removal, relocation, replacement or rebuilding as required. If such work is accomplished by the Contractor, it will be paid for as extra work as provided for in Article 7.02 of the Agreement.

The Contractor shall, at all times in performance of the work, employ approved methods and exercise reasonable care and skill so as to avoid unnecessary delay, injury, damage or destruction of public utility installations and structures; and shall, at all times in the performance of the work, avoid unnecessary interference with, or interruption of, public utility services, and shall cooperate fully with the owners thereof to that end.

All City and other governmental utility departments and other owners of public utilities, which may be affected by the work, will be informed in writing by the Engineer within two weeks after the execution of the Contract or Contracts covering the work. Such notice will set out, in general, and direct attention to, the responsibilities of the City and other governmental

utility departments and other owners of public utilities for such installations and structures as may be affected by the work and will be accompanied by one set of Plans and Specifications covering the work under such Contract or Contracts.

In addition to the general notice given by the Engineer, the Contractor shall give written notice to all City and other governmental utility departments and other owners of public utilities of the location of his proposed construction operations, at least forty-eight (48) hours in advance of breaking ground in any area or on any unit of the work. This can be accomplished by making the appropriate contact with the "Underground Utility Notification Center for Excavators (Call Candy)".

The maintenance, repair, removal, relocation, or rebuilding of public utility installations and structures, when accomplished by the Contractor as herein provided, shall be done by methods approved by the Engineer.

SECTION 2
PLANS AND SPECIFICATIONS

G-2.01 PLANS
The Plans referred to in the Contract Documents bear the general project name and number as shown in the Notice To Bidders.

When obtaining data and information from the Plans, figures shall be used in preference to scaled dimensions, and large scale drawings in preference to small scale drawings.

G-2.02 COPIES FURNISHED TO CONTRACTOR
After the Contract has been executed, the Contractor will be furnished with five sets of paper prints, the same size as the original drawings, of each sheet of the Plans and five copies of the Specifications. Additional copies of the Plans and Specifications, when requested, may be furnished to the Contractor at cost of reproduction.

The Contractor shall furnish each of the subcontractors, manufacturers, and material suppliers such copies of the Contract Documents as may be required for his work.

G-2.03 SUPPLEMENTARY DRAWINGS
When, in the opinion of the Engineer, it becomes necessary to explain more fully the work to be done or to illustrate the work further or to show any changes which may be required, drawings known as Supplementary Drawings, with specifications pertaining thereto, will be prepared by the Engineer and five paper prints thereof will be given to the Contractor.

The Supplementary Drawings shall be binding upon the Contractor with the same force as the Plans. Where such Supplementary Drawings require either less or more than the estimated quantities of work, credit to the City or compensation therefor to the Contractor shall be subject to the terms of the Agreement.

G-2.04 CONTRACTOR TO CHECK PLANS AND DATA
The Contractor shall verify all dimensions, quantities, and details shown on the Plans, Supplementary Drawings, Schedules, Specifications, or other data received from the Engineer, and shall notify him of all errors, omissions, conflicts, and discrepancies found therein. Failure to discover or correct errors, conflicts or discrepancies shall not relieve the Contractor of full responsibility for unsatisfactory work, faulty construction or improper operation resulting therefrom nor from rectifying such conditions at his own expense. He will not be allowed to take advantage of any errors or omissions as full instructions will be furnished by the Engineer, should such errors or omissions be discovered. All schedules are given for the convenience of the Engineer and the Contractor and are not guaranteed to be complete. The Contractor shall assume all responsibility for the making of estimates of the size, kind, and quality of materials and equipment included in work to be done under the Contract.

G-2.05 SPECIFICATIONS
The specifications consist of four parts, the General Provisions, the Technical Specifications, the Special Provisions and the Contract Items. The General Provisions and Technical Specifications contain general requirements which govern the work. The Special Provisions and the Contract Items modify and supplement these by detailed requirements for the work and shall always govern, whenever there appears to be conflict.

G-2.06 INTENT
All work called for in the Specifications applicable to this Contract, but not shown on the Plans in their present form, or vice versa, shall be of like effect as if shown or mentioned in both. Work not specified in either the Plans or in the Specifications, but involved in carrying out their intent or in the complete and proper execution of the work, is required and shall be performed by the Contractor as though it were specifically delineated or described.

The apparent silence of the Specifications as to any detail, or the apparent omission from them of a detailed description concerning any work to be done and materials to be furnished, shall be regarded as meaning that only the best general practice is to prevail and that only material and workmanship of the best quality is to be used, and interpretation of these Specifications shall be made upon that basis.

SECTION 3
WORKING DRAWINGS

G-3.01 SCOPE
The Contractor shall promptly prepare and submit layout, detail and shop drawings to insure proper construction, assembly, and installation of the work using those materials and methods as hereafter specified under the Technical Specifications, Special Provisions and Contract Items.

These drawings shall accurately and distinctly present the following:

a. All working and erection dimensions.
b. Arrangements and sectional views.
c. Necessary details, including complete information for making connections between work under this Contract and work under other Contracts.
d. Kinds of materials and finishes.
e. Parts listed and description thereof.

Drawings for mechanical equipment shall present, where applicable, such data as dimensions, weight and performance characteristics. These data shall show conformance with the performance characteristics and other criteria incorporated in the Plans and Specifications.

Each drawing shall be dated and shall contain the name of the project, Division number and description, the technical specifications section number, names of equipment or materials and the location at which the equipment or materials are to be installed. Location shall mean both physical location and location relative to other connected or attached material. The Engineer will return unchecked any submittal which does not contain complete data on the work and full information on related matters.

Stock or standard drawings will not be accepted for review unless full identification and supplementary information is shown thereon in ink or typewritten form.

The Contractor shall review all working drawing submittals before transmitting them to the Engineer to determine that they comply with requirements of the Specifications. Drawings which are incomplete or are not in compliance with the Contract Documents shall not be submitted for processing by the Engineer. The Contractor shall place his stamp of approval on all working drawings submitted to the Engineer to indicate compliance with the above.

G-3.02 APPROVAL
If the working drawings show departures from the Contract requirements, the Contractor shall make specific mention thereof in his letter of submittal; otherwise approval of such submittals shall not constitute approval of the departure. Approval of the drawings shall constitute approval of the subject matter thereof only and not of any structure, material, equipment, or apparatus shown or indicated.

The approval of drawings will be general and shall not relieve the Contractor of responsibility for the accuracy of such drawings, nor for the proper fitting and construction of the work, nor for the furnishing of materials or work required by the Contract and not indicated on the drawings. No work called for by working drawings shall be done until such drawings have been approved by the Engineer.

The procedure in seeking approval of the working drawings shall be as follows:

1.The Contractor shall submit four complete sets of drawings and other descriptive data together with one copy of a letter of transmittal to the Engineer for approval. The letter of transmittal shall contain the name of the project, contract number, technical specifications section number, the name of the Contractor, a list of drawings with numbers and titles, and any other pertinent information.

2.Drawings or descriptive data will be stamped "Approved", "Approved Subject to Corrections Marked", or "Examined and Returned for Correction" and one copy with a letter of transmittal will be returned to the Contractor.

3.If a drawing or other data is stamped "Approved", the Contractor shall insert the date of approval on five additional copies of the document and transmit the five copies to the Engineer together with one copy of a letter of transmittal containing substantially the same information as described in Instruction 1. above.

4.If a drawing or other data is stamped "Approved Subject to Corrections Marked", the Contractor shall make the corrections indicated and proceed as in Instruction 3., above.

5.If a drawing or data is stamped "Examined and Returned for Correction", the Contractor shall make the necessary corrections and resubmit the documents as set forth in Instruction 1., above. The letter of transmittal shall indicate that this is a resubmittal.

The Contractor shall revise and resubmit the working drawings as required by the Engineer, until approval thereof is obtained.

SECTION 4
MATERIALS AND EQUIPMENT

G-4.01 GENERAL REQUIREMENTS
All materials, appliances, and types or methods of construction shall be in accordance with the Specifications and shall, in no event, be less than that necessary to conform to the requirements of any applicable laws, ordinances, and codes.

All materials and equipment shall be new, unused, and correctly designed. They shall be of standard first grade quality, produced by expert personnel, and intended for the use for which they are offered. Materials or equipment which, in the opinion of the Engineer, are inferior or of a lower grade than indicated, specified, or required will not be accepted.

The quality of Workmanship and Materials entering into the work under this Contract shall conform to the requirements of the pertinent sections, clauses, paragraphs, and sentences, both directly and indirectly applicable thereto, of that part of the Technical Specifications, whether or not direct reference to such occurs in the Contract Items.

Equipment and appurtenances shall be designed in conformity with ANSI, ASME, IEEE, NEMA and other

generally accepted standards and shall be of rugged construction and of sufficient strength to withstand all stresses which may occur during fabrication, testing, transportation, installation, and all conditions of operation. All bearings and moving parts shall be adequately protected against wear by bushings or other approved means and shall be fully lubricated by readily accessible devices. Details shall be designed for appearance as well as utility. Protruding members, joints, corners, gear covers, and the like, shall be finished in appearance. All exposed welds shall be ground smooth and the corners of structural shapes shall be mitered.

Equipment shall be of the approximate dimensions as indicated on the Plans or as specified, shall fit the spaces shown on the Plans with adequate clearances, and shall be capable of being handled through openings provided in the structure for this purpose. The equipment shall be of such design that piping and electrical connections, ductwork, and auxiliary equipment can be assembled and installed without causing major revisions to the location or arrangement of any of the facilities.

Machinery parts shall conform exactly to the dimensions shown on the working drawings. There shall be no more fitting or adjusting in setting up a machine than is necessary in assembling high grade apparatus of standard design. The equivalent parts of identical machines shall be made interchangeable. All grease lubricating fittings on equipment shall be of a uniform type. All machinery and equipment shall be safeguarded in accordance with the safety codes of the ANSI and applicable state and local codes.

G-4.02 MANUFACTURER

The names of proposed manufacturers, suppliers, material, and dealers who are to furnish materials, fixtures, equipment, appliances or other fittings shall be submitted to the Engineer for approval, as early as possible, to afford proper investigation and checking. Such approval must be obtained before shop drawings will be checked. No manufacturer will be approved for any materials to be furnished under this Contract unless he shall be of good reputation and have a plant of ample capacity. He shall, upon the request of the Engineer, be required to submit evidence that he has manufactured a similar product to the one specified and that it has been previously used for a like purpose for a sufficient length of time to demonstrate its satisfactory performance.

All transactions with the manufacturers or subcontractors shall be through the Contractor, unless the Contractor shall request, in writing to the Engineer, that the manufacturer or subcontractor deal directly with the Engineer. Any such transactions shall not in any way release the Contractor from his full responsibility under this Contract.

Any two or more pieces of material or equipment of the same kind, type or classification, and being used for identical types of service, shall be made by the same manufacturer.

G-4.03 REFERENCE TO STANDARDS

Whenever reference is made to the furnishing of materials or testing thereof to conform to the standards of any technical society, organization or body, it shall be construed to mean the latest standard, code, specification or tentative specification adopted and published at the date of advertisement for proposals, even though reference has been made to an earlier standard, and such standards are made a part hereof to the extent which is indicated or intended.

Reference to a technical society, organization or body may be made in the Specifications by abbreviations, in accordance with the following list:

AASHTO for American Association of State Highway and Transportation Officials (formerly AASHO)
ACI for American Concrete Institute
AGMA for American Gear Manufacturer's Association
AFBMA for Anti-Friction Bearing Manufacturer's Association
AISC for American Institute of Steel Construction
AISI for American Iron and Steel Institute
ANSI for American National Standards Institute
ASCE for American Society of Civil Engineers
ASTM for American Society for Testing and Materials
ASME for American Society of Mechanical Engineers
AWS for American Welding Society
AWWA for American Water Works Association
AWPA for American Wood Preservers Association
CEMA for Conveyor Equipment Manufacturers Association
CIPRA for Cast Iron Pipe Research Association
IEEE for Institute of Electrical and Electronic Engineers
IPCEA for Insulated Power Cable Engineers Association
NEC for National Electrical Code
NEMA for National Electrical Manufacturers Association
SAE for Society of Automotive Engineers
SHBI for Steel Heating Boiler Institute
Fed.Spec. for Federal Specifications
Navy Spec. for Navy Department Specifications
U.L.,Inc. for Underwriters' Laboratories, Inc.

When no reference is made to a code, standard or specification, the Standard Specifications of the ANSI, the ASME, the ASTM, the IEEE, or the NEMA shall govern.

G-4.04 SAMPLES

The Contractor shall, when required, submit to the Engineer for approval typical samples of materials and equipment. The samples shall be properly identified by tags and shall be submitted sufficiently in advance of the time when they are to be incorporated into the work, so that rejections thereof will not cause delay. A letter of transmittal, in duplicate, from the Contractor requesting approval must accompany all such samples.

G-4.05 EQUIVALENT QUALITY

Whenever, in the Contract Documents, an article, material, apparatus, equipment, or process is called for by trade name or by the name of a patentee, manufacturer, or dealer or by reference to catalogs of a manufacturer or dealer, it shall be understood as intending to mean and specify the article, material, apparatus, equipment or process designated, or any

equal thereto in quality, finish, design, efficiency, and durability and equally serviceable for the purposes for which it is intended.

Whenever material or equipment is submitted for approval as being equal to that specified, the decision as to whether or not such material or equipment is equal to that specified shall be made by the Engineer.

Upon rejection of any material or equipment submitted as the equivalent of that specifically named in the Contract, the Contractor shall immediately proceed to furnish the designated material or equipment.

Neither the approval by the Engineer of alternate material or equipment as being equivalent to that specified nor the furnishing of the material or equipment specified, shall in any way relieve the Contractor of responsibility for failure of the material or equipment, due to faulty design, material, or workmanship, to perform the functions required of them by the Specifications.

G-4.06 DELIVERY

The Contractor shall deliver materials in ample quantities to insure the most speedy and uninterrupted progress of the work so as to complete thw work within the allotted time. The Contractor shall also coordinate deliveries in order to avoid a delay in, or impediment of, the progress of the work of any related Contractor.

G-4.07 CARE AND PROTECTION

The Contractor shall be solely responsible for properly storing and protecting all materials, equipment, and work furnished under the Contract from the time such materials and equipment are delivered at the site of the work until final acceptance thereof. He shall, at all times, take necessary precautions to prevent injury or damage by water, freezing, or by inclemencies of the weather to such materials, equipment and work. All injury or damage to materials, equipment, or work resulting from any cause whatsoever shall be made good by the Contractor.

The Engineer shall, in all cases, determine the portion of the site to be used by the Contractor for storage, plant or for other purposes. If, however, it becomes necessary to remove and restack materials to avoid impeding the progress of any part of the work or interference with the work to be done by any other Contractor, the Contractor shall remove and restack such materials at his own expense.

G-4.08 TOOLS AND ACCESSORIES

The Contractor shall, unless otherwise stated in the Contract Documents, furnish with each type, kind or size of equipment, one complete set of suitably marked high grade special tools and appliances which may be needed to adjust, operate, maintain, or repair the equipment. Such tools and appliances shall be furnished in approved painted steel cases, properly labeled and equipped with good grade cylinder locks and duplicate keys.

Spare parts shall be furnished as specified.

Each piece of equipment shall be provided with a substantial nameplate, securely fastened in place and clearly inscribed with the manufacturer's name, year of manufacture, serial number, weight and principal rating data.

G-4.09 INSTALLATION OF EQUIPMENT

The Contractor shall have on hand sufficient proper equipment and machinery of ample capacity to facilitate the work and to handle all emergencies normally encountered in work of this character.

Equipment shall be erected in a neat and workmanlike manner on the foundations at the locations and elevations shown on the Plans, unless directed otherwise by the Engineer during installation. All equipment shall be correctly aligned, leveled and adjusted for satisfactory operation and shall be installed so that proper and necessary connections can be made readily between the various units.

The Contractor shall furnish, install and protect all necessary anchor and attachment bolts and all other appurtenances needed for the installation of the devices included in the equipment specified. Anchor bolts shall be as approved by the Engineer and made of ample size and strength for the purpose intended. Substantial templates and working drawings for installation shall be furnished.

The Contractor shall, at his own expense, furnish all materials and labor for, and shall properly bed in non-shrink grout, each piece of equipment on its supporting base that rests on masonry foundations. Grout shall completely fill the space between the equipment base and the foundation.

G-4.10 OPERATING INSTRUCTIONS

The Contractor, through qualified individuals, shall adequately instruct designated employees of the City in the operation and care of all equipment installed hereunder, except for equipment that may be furnished by the City.

The Contractor shall also furnish and deliver to the Engineer three complete sets for permanent files, identified in accordance with Subsection G-3.01 hereof, of instructions, technical bulletins and any other printed matter, such as diagrams, prints or drawings, containing full information required for the proper operation, maintenance, and repair, of the equipment installed and the ordering of spare parts, except for equipment that may be furnished by the City.

In addition to the above three copies, the Contractor shall furnish any additional copies that may be required for use during construction and start-up operations.

G-4.11 SERVICE OF MANUFACTURER'S ENGINEER

The Contract prices for equipment shall include the cost of furnishing a competent and experienced engineer or superintendent who shall represent the manufacturer and shall assist the Contractor, when required, to install, adjust, test and place in operation the equipment in conformity with the Contract Documents. After the equipment is placed in

permanent operation by the City, such engineer or superintendent shall make all adjustments and tests required by the Engineer to provide that such equipment is in proper and satisfactory operating condition, and shall instruct such personnel as may be designated by the City in the proper operation and maintenance of such equipment.

SECTION 5
INSPECTION AND TESTING

G-5.01 GENERAL
The Contractor's attention is hereby directed to Article 3.03 of the Agreement.

Inspection and testing of materials will be performed by the City unless otherwise specified.

For tests specified to be made by the Contractor, the testing personnel shall make the necessary inspections and tests and the reports thereof shall be in such form as will facilitate checking to determine compliance with the Contract Documents. Five copies of the reports shall be submitted and authoritative certification thereof must be furnished to the Engineer as a prerequisite for the acceptance of any material or equipment.

If, in the making of any test of any material or equipment, it is ascertained by the Engineer that the material or equipment does not comply with the Contract, the Contractor will be notified thereof and he will be directed to refrain from delivering said material and equipment, or to remove it promptly from the site or from the work and replace it with acceptable material, without cost to the City.

Tests of electrical and mechanical equipment and appliances shall be conducted in accordance with recognized test codes of the ANSI, ASME, or the IEEE, except as may otherwise be stated herein.

The Contractor shall be fully responsible for the proper operation of equipment during tests and instruction periods and shall neither have nor make any claim for damage which may occur to equipment prior to the time when the City formally takes over the operation thereof.

G-5.02 COSTS
All inspection and testing of materials furnished under this Contract will be performed by the City or duly authorized inspection engineers or inspection bureaus without cost to the Contractor, unless otherwise expressly specified.

The cost of shop and field tests of equipment and of certain other tests specifically called for in the Contract Documents shall be borne by the Contractor and such costs shall be deemed to be included in the contract price.

Materials and equipment submitted by the Contractor as the equivalent to those specifically named in the Contract may be tested by the City for compliance. The Contractor shall reimburse the City for the expenditures incurred in making such tests on materials and equipment which are rejected for noncompliance.

G-5.03 INSPECTIONS OF MATERIALS
The Contractor shall give notice, in writing to the Engineer, sufficiently in advance of his intention to commence the manufacture or preparation of materials especially manufactured or prepared for use in or as part of the permanent construction. Such notice shall contain a request for inspection, the date of commencement and the expected date of completion of the manufacture or preparation of materials. Upon receipt of such notice the Engineer will arrange to have a representative present at such times during the manufacture as may be necessary to inspect the materials or he will notify the Contractor that inspection will be made at a point other than the point of manufacture, or he will notify the Contractor that inspection will be waived. The Contractor must comply with these provisions before shipping any material. Such inspection shall not release the Contractor from the responsibility for furnishing materials meeting the requirements of the Contract Documents.

G-5.04 CERTIFICATE OF MANUFACTURE
When inspection is waived or when the Engineer so requires, the Contractor shall furnish to him authoritative evidence in the form of Certificates of Manufacture that the materials to be used in the work have been manufactured and tested in conformity with the Contract Documents. These certificates shall be notarized and shall include copies of the results of physical tests and chemical analyses, where necessary, that have been made directly on the product or on similar products of the manufacturer.

G-5.05 SHOP TESTS OF OPERATING EQUIPMENT
Each piece of equipment for which pressure, duty, capacity, rating, efficiency, performance, function, or special requirements are specified shall be tested in the shop of the maker in a manner which shall conclusively prove that its characteristics comply fully with the requirements of the Contract Documents. No such equipment shall be shipped to the work until the Engineer notifies the Contractor, in writing, that the results of such tests are acceptable.

Five copies of the manufacturer's actual test data and interpreted results thereof, accompanied by a certificate of authenticity sworn to by a responsible official of the manufacturing company, shall be forwarded to the Engineer for approval.

The cost of the shop tests and of furnishing manufacturer's preliminary and shop test data of operating equipment shall be borne by the Contractor.

G-5.06 PRELIMINARY FIELD TESTS
As soon as conditions permit, the Contractor shall furnish all labor, materials, and instruments and shall make preliminary field tests of equipment. If the preliminary field tests disclose any equipment furnished under this Contract which does not comply with the requirements of the Contract Documents, the Contractor shall, prior to the acceptance tests, make all changes, adjustments, and replacements required.

G-5.07 FINAL FIELD TESTS
Upon completion of the work and prior to final payment, all equipment and appliances installed under this Contract shall be subjected to acceptance tests as specified or required to prove compliance with the Contract Documents.

The Contractor shall furnish labor, fuel, energy, water and all other materials, equipment, and instruments necessary for all acceptance tests, at no additional cost to the City.

G-5.08 FAILURE OF TESTS
Any defects in the materials and equipment or their failure to meet the tests, guarantees or requirements of the Contract Documents shall be promptly corrected by the Contractor by replacements or otherwise. The decision of the Engineer as to whether or not the Contractor has fulfilled his obligations under the Contract shall be final and conclusive. If the Contractor fails to make those corrections or if the improved materials and equipment, when tested, shall again fail to meet the guarantees or specified requirements, the City, notwithstanding its partial payment for work, and materials and equipment, may reject the materials and equipment and may order the Contractor to remove them from the site at his own expense.

In case the City rejects any materials and equipment, then the Contractor shall replace the rejected materials and equipment within a reasonable time. If he fails to do so, the City may, after the expiration of a period of thirty calendar days after giving him notice in writing, proceed to replace such rejected materials and equipment, and the cost thereof shall be deducted from any compensation due or which may become due the Contractor under this Contract.

The City agrees to obtain other equipment within a reasonable time and the Contractor agrees that the City may use the equipment furnished by him without rental or other charges until the new equipment is obtained.

Materials or work in place that fails to pass acceptability tests shall be retested at the direction of the construction engineer all such retests shall be at the Contractor's expense. The rates charged shall be in accordance with the Department of Public Works current annual inspection contract which is available for inspection at the offices of the Department of Public Works.

G-5.09 FINAL INSPECTION
The procedures for final inspection shall be in accordance with the provisions of Article 4.07 of the Agreement. During such final inspections, the work shall be clean and free from water. In no case will the final estimate be prepared until the Contractor has complied with all the requirements set forth and the Engineer has made his final inspection of the entire work and is satisfied that the entire work is properly and satisfactorily cosntructed in accordance with the requirements of the Contract Documents.

SECTION 6

TEMPORARY STRUCTURES

G-6.01 GENERAL
All false work, scaffolding, ladders, hoistways, braces, pumping plants, shields, trestles, roadways, sheeting, centering forms, barricades, drains, flumes, and the like, any of which may be needed in the construction of any part of the work and which are not herein described or specified in detail, must be furnished, maintained and removed by the Contractor, and he shall be responsible for the safety and efficiency of such works and for any damages that may result from their failure or from their improper construction, maintenance, or operation.

G-6.02 PUBLIC ACCESS
At all points in the work where public access to any building, house, place of business, public road, or sidewalk would be obstructed by any action of the Contractor in executing the work required by this Contract, the Contractor shall provide such temporary structure, bridges or roadway as may be necessary to maintain public access at all times. At least one lane for vehicular traffic shall be maintained in streets in which the Contractor is working. Street closure permits are required from the Department of Public Works.

The Contractor shall provide suitable temporary bridges, as directed by the Engineer, at street intersections when necessary for the maintenance of vehicular and pedestrian traffic.

Prior to temporarily cutting of access to driveways and garages, the Contractor shall give twelve (12) hours notice to affected property owners. Interruptions to use of private driveways shall be kept to a minimum.

G-6.03 CONTRACTOR'S FIELD OFFICE
The Contractor shall erect, furnish and maintain a field office with a telephone at the site during the entire period of construction. He or an authorized agent shall be present at this office at all times while his work is in progress. Readily accessible copies of both the Contract Documents and the latest approved working drawings shall be kept at this field office.

G-6.04 TEMPORARY FENCE
If, during the course of the work, it is necessary to remove or disturb any fence or part thereof, the Contractor shall, at his own expense, if so ordered by the Engineer, provide a suitable temporary fence which shall be maintained until the permanent fence is replaced. The Engineer shall be solely responsible for the determination of the necessity for providing a temporary fence and the type of temporary fence to be used.

G-6.05 RESPONSIBILITY FOR TEMPORARY STRUCTURES
In accepting the Contract, the Contractor assumes full responsibility for the sufficiency and safety of all temporary structures or work and for any damage which may result from their failure or their improper construction, maintenance, or operation and will indemnify and save harmless the City from

all claims, suits or actions and damages or costs of every description arising by reason of failure to comply with the above provisions.

SECTION 7
TEMPORARY SERVICES

G-7.01 WATER
The Contractor shall provide the necessary water supply at his own expense. He shall, if necessary, provide and lay necessary waterlines from existing mains to the place of using, shall secure all necessary permits and pay for all taps to water mains or hydrants and for all water used at the established rates.

G-7.02 LIGHT AND POWER
The Contractor shall provide, at his own expense, temporary lighting and power facilities required for the proper prosecution and inspection of the work. If, in the opinion of the Engineer, these facilities are inadequate, the Contractor will not be permitted to proceed with any portion of the work affected thereby.

G-7.03 SANITARY REGULATIONS
The Contractor shall prohibit and prevent the committing of nuisances on the site of the work or on adjoining property and shall discharge any employee who violates this rule.

Ample washrooms and toilet facilities and a drinking water supply shall be furnished and maintained in strict conformity with the law by the Contractor for use by his employees.

G-7.04 ACCIDENT PREVENTION
Precautions shall be exercised at all times for the protection of persons and property. The safety provisions of applicable laws, building and construction codes shall be observed. The Contractor shall comply with the U. S. Department of Labor Safety and Health Regulations for construction promulgated under the Occupational Safety and Health Act of 1970 (PL 91-596), and under Section 107 of the Contract Work. Hours and Safety Standards Act (PL 91-54), except where state and local safety standards exceed the federal requirements and except where state safety standards have been approved by the Secretary of Labor in accordance with provisions of the Occupational Safety and Health Act.

G-7.05 FIRST AID
The Contractor shall keep upon the site, at each location where work is in progress, a completely equipped first aid kit and shall provide ready access thereto at all times when men are employed on the work.

G-7.06 HEATING
The Contractor shall provide temporary heat, at his own expense, whenever required on account of work being carried on during cold weather and to prevent freezing of water pipes and other damage to the work.

SECTION 8

LINES AND GRADES

G-8.01 GENERAL
All work done under this Contract shall be constructed in accordance with the lines and grades shown on the Plans, or as given by the Engineer. The full responsibility for keeping alignment and grade shall rest upon the Contractor.

The Engineer will establish bench marks and base line controlling points. Reference remarks for lines and grades as the work progresses will be located to cause as little inconvenience to the prosecution of the work as possible. The Contractor shall so place excavation and other materials as to cause no inconvenience in the use of the use of the reference marks provided. He shall remove any obstructions placed by him contrary to this provision.

G-8.02 SURVEYS
The Contractor shall furnish and maintain, at his own expense, stakes and other such materials, and give such assistance, including qualified helpers, as may be required by the Engineer for setting reference marks. The Contractor shall check such reference marks by such means as he may deem necessary and, before using them, shall call the Engineer's attention to any inaccuracies. The Contractor shall, at his own expense, establish all working or construction lines and grades as required from the reference marks set by the Engineer, and shall be solely responsible for the accuracy thereof. He shall, however, be subject to the check and review of the Engineer.

The Contractor shall keep the Engineer informed a reasonable time in advance as to his need for line and grade reference marks, in order that they may be furnished and all necessary measurements made for record and payment with the minimum of inconvenience to the Engineer or of delay to the Contractor.

It is the intention not to delay the work for the establishment of reference marks but, when necessary, working operations shall be suspended for such reasonable time as the Engineer may require for this purpose.

G-8.03 SAFEGUARDING MARKS
The Contractor shall safeguard all points, stakes, grade marks, monuments and bench marks made or established on the work, bear the cost of reestablishing them if disturbed, and bear the entire expense of rectifying work improperly installed due to not maintaining or protecting or to removing without authorization such established points, stakes and marks.

The Contractor shall safeguard all existing and known property corners, monuments and marks adjacent to but not related to the work and, if required, shall bear the cost of reestablishing them if disturbed or destroyed.

G-8.04 DATUM PLANE
All elevations indicated or specified refer to the Mean Sea Level Datum of the U.S.C. & G.S. (N.O.S.) which is 0.80 feet above the Mean Low Water Datum of the U. S. Army

Corps of Engineers.

SECTION 9
ADJACENT STRUCTURES AND LANDSCAPING

G-9.01 RESPONSIBILITY
The responsibility for removal, replacement, relocation, repair, rebuilding or protection of all public utility installations, including poles, tracks, pipes, wires, conduits, house service connections, vaults, manholes, sewers, traffic control and fire alarm signal circuit installations and other appurtenances and facilities shall be in accordance with G-1.02 and G-1.03.

The Contractor shall also be entirely responsible and liable for all damage or injury as a result of his operations to all other adjacent public and private property, structures of any kind and appurtenances thereto met with during the progress of the work. The cost of protection, replacement in their original locations and conditions or payment of damages for injuries to such adjacent public and private property and structures affected by the work, whether or not shown on the Plans, and the removal, relocation, and reconstruction of such items called for on the Plans or specified shall be included in the various Contract Items and no separate payment will be made therefor. Where such public and private property, structures of any kind and appurtenances thereto are not shown on the Plans and when, in the opinion of the Engineer, removal or relocation and reconstruction is necessary to avoid interference with the work, payment therefor will be made as provided for extra work in Article 7.02 of the Agreement.

G-9.02 PROTECTION OF TREES
All trees and shrubs shall be adequately protected by the Contractor with boxes or otherwise and, within the City of Tampa, in accordance with ordinances governing the protection of trees. No excavated materials shall be placed so as to injure such trees or shrubs. Trees or shrubs destroyed by negligence of the Contractor or his employees shall be replaced by him with new stock of similar size and age, at the proper season, and at the sole expense of the Contractor.

Beneath trees or other surface structures, where possible, pipelines may be built in short tunnels, backfilled with excavated materials, except as otherwise specified, or the trees or structures carefully supported and protected from damage.

The City may order the Contractor, for the convenience of the City, to remove trees along the line of trench excavation. If so ordered, the City will obtain any permits required for removal of trees. Such tree removal ordered shall be paid for under the appropriate Contract Items.

G-9.03 LAWN AREAS
Lawn areas shall be left in as good condition as before the starting of the work. Where sod is to be removed, it shall be carefully removed and later replaced, or the area where sod has been removed shall be restored with new sod in the manner described in the Technical Specifications section.

G-9.04 RESTORATION OF FENCES
Any fence, or part thereof, that is damaged or removed during the course of the work shall be replaced or repaired by the Contractor and shall be left in as good a condition as before the starting of the work. The manner in which the fence is repaired or replaced and the materials used in such work shall be subject to the approval of the Engineer. The cost of all labor, materials, equipment, and work for the replacement or repair of any fence shall be deemed included in the appropriate Contract Item or Items, or if no specific Item is provided therefor, as part of the overhead cost of the work, and no additional payment will be made therefor.

SECTION 10
PROTECTION OF WORK AND PUBLIC

G-10.01 TRAFFIC REGULATIONS
The Contractor shall arrange his work to comply with Article G-6.02. The work shall be done with the least possible inconvenience to the public and to that end the work may be confined by the Engineer to one block at a time.

G-10.02 BARRIERS AND LIGHTS
During the prosecution of the work, the Contractor shall put up and maintain at all times such barriers, and lights, as will effectually prevent accidents. The Contractor shall provide suitable barricades, red lights, "danger" or "caution" or "street closed" signs and watchmen at all places where the work causes obstructions to the normal traffic or constitutes in any way a hazard to the public. Such barriers and signs shall be constructed to State of Florida Department of Transportation standards and placed as recommended by the Traffic Division of the City's Department of Public Works.

No open fires will be permitted.

G-10.03 SMOKE PREVENTIONS
The Contractor shall use hard coal, coke, oil or gas as fuel for equipment generating steam. A strict compliance with ordinances regulating the production and emission of smoke will be required.

G-10.04 NOISE
The Contractor shall eliminate noise to as great an extent as practicable at all times. Air compressing plants shall be equipped with silencers and the exhaust of all gasoline motors or other power equipment shall be provided with mufflers. In the vicinity of hospitals and schools, special care shall be used to avoid noise or other nuisances. The Contractor shall strictly observe all local regulations and ordinances covering noise control.

Except in the event of an emergency, no work shall be done between the hours of 7:00 p.m. and 7:00 a.m., or on Sundays. If the proper and efficient prosecution of the work requires operations during the night, the written permission of the Engineer shall be obtained before starting such items of the work.

G-10.05 ACCESS TO PUBLIC SERVICES
Neither the materials excavated nor the materials or plant used in the construction of the work shall be so placed as to prevent free access to all fire hydrants, valves or manholes.

G-10.06 DUST PREVENTION
The Contractor shall prevent dust nuisance from his operations or from traffic by keeping the streets sprinkled with water at all times.

G-10.07 PRIVATE PROPERTY
The Contractor shall so conduct the work that no equipment, material, or debris will be placed or allowed to fall upon private property in the vicinity of the work unless he shall have obtained the owner's written consent thereto and shall have shown this consent to the Engineer.

SECTION 11
SLEEVES AND INSERTS

G-11.01 COORDINATION
When the Contract requires the placing of conduits, saddles, boxes, cabinets, sleeves, inserts, foundation bolts, anchors, and other like work in floors, roofs, or walls of buildings and structures, they shall be promptly installed in conformity with the construction program. The Contractor who erects the floors, roofs, and walls shall facilitate such work by fully cooperating with the Contractors responsible for installing such appurtenances. The Contractor responsible for installing such appurtenances shall arrange the work in strict conformity with the construction schedule and avoid interference with the work of other contractors.

G-11.02 OPENINGS TO BE PROVIDED
In the event timely delivery of sleeves and other materials cannot be made and to avoid delay, the affected Contractor may arrange to have boxes or other forms set at the locations where the appurtenances are to pass through or into the floors, roofs, walls, or other work. Upon the subsequent installation of these appurtenances, the Contractor erecting the structure shall fill around them with materials as required by the Contract. The necessary expenditures incurred for the boxing out and filling in shall be borne by the Contractor or Contractors required to furnish the sleeves and inserts. Formed openings and later installation of sleeves will not be permitted at locations subject to hydrostatic pressure.

SECTION 12
CUTTING AND PATCHING

G-12.01 GENERAL
The Contractor shall do all cutting, fitting, or patching of his portion of the work that may be required to make the several parts thereof join and coordinate in a manner satisfactory to the Engineer and in accordance with the Plans and Specifications. The work must be done by competent workmen skilled in the trade required by the restoration.

SECTION 13
CLEANING

G-13.01 DURING CONSTRUCTION
During construction of the work, the Contractor shall, at all times, keep the site of the work and adjacent premises as free from material, debris, and rubbish as is practicable and shall remove the same from any portion of the site if, in the opinion of the Engineer, such material, debris, or rubbish constitutes a nuisance or is objectionable.

The Contractor shall remove from the site all of his surplus materials and temporary structures when no further need therefor develops.

G-13.02 FINAL CLEANING
At the conclusion of the work, all erection plant, tools, temporary structures and materials belonging to the Contractor shall be promptly taken away, and he shall remove and promptly dispose of all water, dirt, rubbish or any other foreign substances.

The Contractor shall thoroughly clean all equipment and materials installed by him and shall deliver such materials and equipment undamaged in a bright, clean, polished, and new appearing condition.

SECTION 14
MISCELLANEOUS

G-14.01 PROTECTION AGAINST SILTATION AND BANK EROSION
The Contractor shall arrange his operations to minimize siltation and bank erosion on construction sites and on existing or proposed watercourses and drainage ditches.

G-14.02 EXISTING FACILITIES
The work shall be so conducted to maintain existing facilities in operation insofar as is possible. Work shall be scheduled to minimize bypassing during construction. Requirements and schedules of operations for maintaining existing facilities in service during construction shall be as described in the Special Provisions.

G-14.03 USE OF CHEMICALS
All chemicals used during project construction or furnished for project operation, whether herbicide, pesticide, disinfectant, polymer, reactant or of other classification, must show approval of either EPA or USDA. Use of all such chemicals and disposal of residues shall be in strict conformance with instructions.

* * * * * * *

SUPPLEMENTARY GENERAL PROVISIONS

1.0 GENERAL:

1.1 This Section sets forth modifications to the "General Provisions" of the Contract Documents which are referred to as Specifications, General Provisions.

1.2 Paragraph numbers and titles used herein refer to similarly numbered and titled articles in the General Provisions.

1.3 Only those paragraphs contained herein shall be assumed to be modified. Paragraphs not appearing herein shall apply as written in the General Provisions.

1.4 Any portion of the General Provisions, whether or not modified herein, may be further modified in Special Conditions and in the Instructions to Bidders of these Specifications.

1.5 Where the Supplementary General Provisions, Special Conditions and Instructions to Bidders conflict with the General Provisions, the Supplementary General Provisions, Special Conditions and the Instructions to Bidders shall take precedence.

2.0 MODIFICATIONS TO THE GENERAL PROVISIONS AS FOLLOWS:

2.1 SECTION 1 SCOPE AND INTENT

G-1.02 WORK INCLUDED

The first paragraph shall be deleted in its entirety and replaced by the following paragraph:

"The Contractor shall furnish all labor, superintendence, materials, plant, power, light, heat, fuel, water, tools, appliances, equipment, supplies, and other means of construction necessary or proper for performing and completing the work. He shall obtain all required permits. He shall perform and complete the work in the manner best calculated to promote rapid construction consistent with safety of life and property and to the satisfaction of the Engineer, and in strict accordance with the Contract Documents. The Contractor shall clean up the work and maintain it during and after construction, until incidental thereto. He shall repair or restore all during performance of the work."

2.2 SECTION 3 WORKING DRAWINGS

a. Change to read as follows:

SECTION 3 SHOP DRAWINGS

b. Replace the existing paragraphs in their entirety with the following paragraphs:

G-3.01 SCOPE

Shop drawings, schedules, etc., shall be submitted to the Engineer and/or Architect in quadruplet, accompanied by a letter of transmittal. Subcontractors and suppliers shall submit shop drawings and make requests for approvals through their respective prime Contractors.

The drawings shall be numbered consecutively and shall accurately and distinctly present the following:

(1) Names of equipment or materials, and the locations at which the equipment or materials are to be installed in the work.

(2) All working and erection dimensions.

(3) Arrangement and sectional views.

(4) Necessary details, including complete information for making connections between work under this contract and work under other contracts.

(5) Kinds of materials and finishes.

(6) Parts list and description thereof.

The Engineer and/or Architect may decline to consider any shop drawing that does not contain complete data on the work and full information of related matters.

Fax submittals will not be reviewed.

G-3.02 APPROVAL:

Shop drawings shall be examined by the Contractor prior to his transmitting them to the Engineer and/or Architect. Shop drawings submitted to the Engineer and/or Architect shall bear the Contractor's stamp of approval evidencing that he has examined and checked each drawing and that he has found said drawings to be in accordance with the Contract requirements. Any drawings submitted without this stamp will not be considered by the Engineer and/or Architect and will be returned to the Contractor for re- submission.

If the shop drawings show departures from the Contract requirements, the Contractor shall make specific mention thereof in his letter of submittal and the following shall be submitted:

(1) Each request shall include a complete description of the proposed substitute and the name of the material or equipment for which it is to be substituted.

(2) Furnish drawings, cut, manufacturer's printed specifications, performance and test data and any other data or information necessary for a complete evaluation of both the item specified and the proposed substitute item.

Approval of the drawings shall constitute approval of the subject matter thereof only and not of any structure, material, equipment or apparatus shown or indicated.

Approval of the drawings shall be general and shall not relieve the Contractor of responsibility for the accuracy of such drawings, nor for the quantities of materials and equipment, nor for the proper fitting and construction of the work, nor for the furnishing of materials, tools, equipment, etc., required by this contract and not indicated on the drawings.

No work called for by Shop Drawings shall be done until the said drawings have been approved by the Engineer and/or Architect.

The Contractor shall revise and resubmit the shop drawings as required by the Engineer and/or Architect until approval thereof is obtained.

The City shall retain four (4) copies of all submittals unless the Engineers and/or Architect makes a specific request for additional copies.

Items	Submittals	*Approval
All trade	Fourteen (14) Days	Fourteen (14) Days

*From date of receipt of submittal.

Delays on account of tardy or untimely submittals will not be considered as causes of extension of time of the Contract or increases to the Contract Sum.

G-3.03 JOB SITE:

One (1) copy of all approved submittals SHALL BE available at the Contractor's Office at the job site.

2.3 SECTION 4 MATERIALS AND EQUIPMENT

G-4.01 GENERAL REQUIREMENTS

In the first paragraph, second line, delete the word "specifications" and substitute the words "Contract Documents".

G4.03 REFERENCE TO STANDARDS

The following paragraph shall be added in its entirety:

"Compliance with the Standard Building Code, latest edition, and all local electrical and plumbing codes shall be required. In the event of a conflict in code requirements, the most stringent code or standard shall apply."

G-4.05 EQUIVALENT QUALITY

Add the following sentence to paragraph two: "Any professional fees associated with shop drawing review of materials or equipment submitted for approval as equivalent to that specified shall be borne by the Contractor.

2.4 SECTION 5 INSPECTION AND TESTING

G-5.06 PRELIMINARY FIELD TESTS

G-5.07 FINAL FIELD TEST

A. Add the following sentence to BOTH of the above paragraphs:

The Contractor shall provide, at NO EXTRA COST to the City, ALL labor, tools, equipment, materials, etc., for the Engineer and/or Architect to make any field test that may be required in the judgment of the Engineer and/or Architect.

2.5 SECTION 6 TEMPORARY STRUCTURES

G-6.03 CONTRACTOR'S FIELD OFFICE

a. In the last sentence of this paragraph, add the following words: "...and Shop Drawings".

G-6.03 CONTRACTOR'S FIELD OFFICE

A. Delete this paragraph G-6.03 in its entirety.

2.6 SECTION 7 TEMPORARY SERVICES

G-7.01 WATER, G-7.02 LIGHT AND POWER, AND G-7.03 SANITARY REGULATIONS

The City of Tampa shall provide, at no cost to the Contractor, water and electricity for installation of this project. All water and electricity shall be applied and/or connected by the Contractor. Washroom/toilet facilities are to be provided by the Contractor.

G-7.07 TELEPHONE

The Contractor shall furnish the Engineer with a telephone number(s) by which the Engineer may contact the site.

2.7 SECTION 14 MISCELLANEOUS

G-14.04 USE OF EXPLOSIVES:

Explosives will not be used on the work except when authorized by the Engineer and/or Architect. The use of same, if authorized, shall conform to laws or ordinances which may pertain to the use of same and the utmost care will be exercised by the Contractor so as not to endanger life or property. The Contractor will assume full responsibility in connection with use of any explosives even though authorized. Explosives will not be stored within the City limits.

G-14.05 OWNERSHIP OF MATERIALS:

The removal of any underground and surface structures as required shall be performed in a careful manner to permit salvaging of as much material, such as pipe and brick, also broken section of sidewalk, as practical for use in repair and maintenance of City-owned facilities.

Such acceptable salvaged material remains the property of the City and shall be placed in stock piles so as not to interfere with new construction work but accessible for loading and hauling by the City or by the Contractor within the free haul limit of six (6) miles. The Engineer and/or Architect shall direct the Contractor as to the location of stockpile.

The paving material, such as vitrified brick, asphalt block and other paving materials removed from the excavated areas and suitable for reuse but not reused in the work, shall also be considered the property of the City. The handling of such materials shall be as set forth elsewhere in the Specifications or Special Provisions.

G-14.06 NOTICE OR SERVICE THEREOF:

All notices, which shall include demands, instructions, requests, approvals and claims, shall be in writing.

Any notice to or demand upon the Contractor shall be sufficiently given if delivered to the office of the Contractor specified in the bid (or to such other office as the Contractor may, from time to time, designate to the City in writing), or if deposited in the United States mail in a sealed, postage-prepaid envelope, or delivered, with charges case addressed to such office.

All notices required to be delivered to the City shall, unless otherwise specified in writing to the Contractor, be delivered to Contract Administration Department – Construction Management Division, 3808 East 26th Avenue, Tampa, Florida 33605, and any notice to or demand upon the City shall be sufficiently given if delivered to the office of the said Engineer and/or Architect, or if deposited in the United States mail in a sealed, postage- prepaid envelope, or delivered with charges prepaid to any telegraph company for transmission, in each case addressed to said Engineer and/or Architect or to such other representative of the City or to such other address as the City may subsequently specify in writing to the Contractor or to its representative at the construction site for such purposes.

Any such notice or demand shall be deemed to have been given or made as of the time of actual delivery or (in the case of mailing) when the same should have been received in due course of post or (in the case of telegram) at the time of actual receipt, as the case may be.

G-14.07 REQUIREMENTS FOR CONTROL OF THE WORK:

Prior to the start of the work included in this contract, a Preconstruction Conference will be held by the Engineer and/or Architect to be attended by the Contractor and representatives of the various utilities and others for the purpose of establishing a schedule of operations which will coordinate the work to be done under this contract with all related work to be done by others within the limits of the project. The Contractor shall be prepared for this meeting and shall present a comprehensive construction schedule for all items of work to be accomplished by him, which will be used as the basis for the development of an overall operational schedule and a list of subcontractors to be used on this work.

All items of work on this contract shall be coordinated so that progress on each related work item will be continuous from week to week. The progress of the work will be reviewed by the Engineer and/or Architect at the end of each week, and if the progress on any item of work during that week is found to be unsatisfactory, the Contractor shall be required to adjust the rate of progress on that item or other items as directed by the Engineer and/or Architect.

The Contractor shall conduct his operations in such a manner as will result in a minimum of inconvenience to occupants of adjacent homes and business establishments and shall provide temporary access as directed or as conditions in any particular location may require.

G-14.08 WORK DIRECTIVE CHANGE:

"A Work Directive Change is a written directive to the Contractor, issued on or after the date of the execution of the Agreement, and signed by the Engineer on behalf of the City, ordering an addition, deletion or revision in the work, or responding to an emergency. A Work Directive Change will not change the contract price or the time for completion, but is evidence that the parties expect that the change directed or documented by a Work Directive Change will be incorporated in a subsequently issued Change Order following negotiations by the parties as to its effect, if any, on the contract price or the time for completion. "Without invalidating the Agreement, additions, deletions or revisions in the Work may, at any time or from time to time, be authorized by a Change Order or a Work Directive Change. Upon receipt of any such document, the Contractor shall promptly proceed with the work involved."

G-14.09 RESERVED PARKING SIGNS IN PARKING METER AREAS

Not Applicable.

G-14.10 EROSION AND SEDIMENT CONTROL:

During construction, the Contractor shall provide adequate erosion and sediment controls to prevent adverse effects to the environment and public and private property. He shall construct and maintain control structures necessary to prevent erosion and sediment. He shall conduct and schedule construction operations to avoid, prevent, and minimize erosion and sediment. He shall comply with City, County, State, and Federal codes, laws, and regulations and the plans and specifications for this project pertaining to erosion and sediment prevention and control.

At the Preconstruction Conference, the Contractor shall present a plan for erosion and sediment prevention and control. This plan shall include the operations methods, also temporary and permanent control measures and structures to be used on this project.

G-14.11 ENGINEER'S FIELD OFFICE:

The Contractor shall provide and maintain an adequate field office, which shall be a structure completely separated from the Contractor's field office, for the exclusive use of the Construction Engineer and/or Architect and engineering technicians within the project limits. No additional payment shall be made for this item. Location of said field office shall be as directed by the Engineer and/or Architect.

Contractor shall provide one (1) desk with chair, one (1) four-drawer metal file cabinet with lock, plan rack to hold a minimum of eight (8) separate sets of plans and one (1) plan table, top shall be minimum of 3'-0" wide x 6'-8" long; also adequate heating, air conditioning, lighting and one (1) window, 36"x36" minimum size, in each of four (4) walls.

G-14.12 PROJECT SIGNS:

The Contractor shall furnish and install, as directed by the Engineer and/or Architect, a project sign of design, size, color, etc., as per drawing page SIGN-1.

G-15.0 NOTIFICATION TO CONTRACTORS:

All Contractors working in City of Tampa buildings and facilities that contain ACM will be provided with a written notice, including contract custodial firms. The notice when applicable will advise Contractors about the possibility of encountering ACM while working for the City and will require Contractors to become familiar with locations of ACM within their work areas. The Contractor Notice shall include the name and phone number of the designated Building Asbestos Contact Person assigned to that building/facility. This notice is provided in Appendix C.

Appendix C

Contractor Notification Requirements

Asbestos-Containing Material (ACM) may be present in the facility. The presence of ACM does not necessarily mean that a hazard exists; however, a hazard may be created when ACM is disturbed and asbestos fibers become airborne. The best way to maintain a safe environment is to avoid the disturbance of ACM.

It is possible that you may encounter ACM while working in the facility. On the bulletin board, there is a summary of known locations of ACM in that building. The summary may or may not be all inclusive. Therefore, workers must exercise caution and be watchful for materials that might contain asbestos. Avoid disturbing ACM or suspected ACM as you carry out your work.

If your work necessitates the disturbance of ACM you shall take whatever precautions that are necessary to protect human health and the environment from asbestos fibers. At minimum, you will comply with all Federal, Sate, and Local responsible for assuring that you are medically certified, trained, and equipped with the proper personal protective devices for safe handling of ACM. You must notify the designated Building Asbestos Contact Person before disturbing any asbestos-containing materials in City-Owned buildings. The designated Building Asbestos Contract Person is listed on the bulletin board with the asbestos location summary.

If you need additional information regarding ACM in a particular building or would like to see a copy of the Operations and Maintenance Plan, contact the Building Asbestos Contact Person responsible for the building for which you will be working.

Comply with all regulatory requirements for removal and disposal.

SPECIAL CONDITIONS

1.0 PRECONSTRUCTION BRIEFING:

The Contractor, upon receiving notice that he has been awarded the contract for the construction of the project, shall make an appointment with the Engineer and/or Architect for said briefing. The Contractor shall bring to this meeting the following:

1. Contract Documents not yet submitted.
2. A detailed Job Progress Schedule.
3. Samples, questions, etc., he feels necessary.
4. List of subcontractors.

Failure to bring the above items to the meeting will result in cancellation of meeting. Once items have been submitted, meeting will be rescheduled by the City. Site access and commencement of work will not be allowed during period between meetings.

Contractor shall have representatives present at meeting that are familiar with, and conversant on, the scope of the work and Contract Document requirements. Failure to have such persons present will also result in cancellation and rescheduling of meeting until such a time when condition is corrected.

Elapsed time as a result of the Contractor's failure to comply with above will not result in an extension of contract time.

2.0 SITE REVIEW:

Before submitting Proposals, Bidders shall carefully examine the entire site of the proposed work and adjacent premises and the various means of approach and access to the site, and make all necessary investigations to inform themselves thoroughly as to the facilities for delivering, placing and operating the necessary construction equipment, and for delivering and handling materials at the site, and inform themselves thoroughly as to all difficulties involved in the completion of all the work in accordance with the Contract Documents.

The Contractor shall immediately, upon entering project site for the purpose of beginning work, review project site with the Engineer and/or Architect for the purpose of selecting area(s) to place materials for storage.

The Contractor must exercise proper precaution to verify all figures shown or indicated on the drawings, all existing trees, paved areas; utilities, etc., shall be located before beginning any work, and he shall be held responsible for any error resulting from his failure to exercise such precaution.

2.1 LAYING OUT WORK:

The Contractor shall locate all general reference points and take necessary action to prevent their destruction; lay out his own work and be responsible for all lines, elevations, measurements, grading, trenching, backfilling, utilities and other work to be executed by him for a complete project under this contract.

The Contractor shall lay out all work and have final approval by the Engineer and/or Architect before installation begins. Contractor shall be held responsible for any error resulting from his failure to exercise such approval. Said errors shall be corrected by the Contractor at NO EXTRA COST to the City.

The Contractor shall coordinate with the Parks Department and shall identify each and every tree to remain prior to the start of work. The specific trees to remain shall be approved by the Parks Department.

The final location of all work to be performed shall be made jointly by the Engineer and/or Architect and the Contractor at the project site.

3.0 SAFETY AND HEALTH STANDARDS:

The performance of all construction under this contract shall conform to ALL Local, State, Federal Occupation Safety and Health Act Standards.

At the end of each work day, all work areas shall be left in a safe condition. Barricades and/or warning devices shall be provided for at any open excavations or barriers on the project site.

The Contractor's attention is directed to paragraphs Article 3.07 (page A-10) and Article 12.03 (page A-31) of the Agreement, and paragraph G-7.04 (page G-18) of the General Provisions.

4.0 INFORMATION FOR COLOR SCHEDULES:

Not later than thirty (30) calendar days after authorization to proceed with contract work, the Contractor shall submit to the Engineer and/or Architect the names of all manufacturers and trade names for all materials involving selection based upon color or texture or other design appearance features which are to be used in this project. Where samples are necessary for such selection, furnish same.

If such information is not furnished by Contractor within thirty (30) day period, the Engineer and/or Architect will select colors and textures from products named in the Contract Documents.

5.0 RESPONSIBILITY OF CONTRACTOR:

The Contractor shall take all necessary precautions to protect all project surfaces and adjoining areas from mechanical damage from tools, equipment, materials, supports, etc., and shall provide adequate protection from leaking lubricants or fluids from his equipment.

Damage to said project surfaces and adjoining areas caused by a lack of protection or negligence by the Contractor shall be repaired and/or replaced at NO EXTRA COST to the City and to the full satisfaction of the Engineer and/or Architect.

The Contractor and all subcontractors are charged with the protection of the work and property, but the final responsibility for these provisions rests with the Contractor who shall take complete charge of the project site from start to finish of work.

The Contractor shall take particular precautions to protect existing trees and plant material. All trees and other plant material to remain shall be marked by the City prior to start of work.

Excavation, earthwork or sitework within the drip line of existing trees shall be done either manually or by methods approved by the City of Tampa Parks Department.

If the Contractor damages any tree or plant material in any way he shall be required to replace the damaged tree or plant material as follows:

1. Trees

    a. Replace a 6" caliper or less with a 6" caliper of the same species.

    b. Replace a 7"-10" caliper with two (2) 6" caliper of the same species.

    c. Replace a 10"-15" caliper with three 6" caliper of the same species.

    d. Replace a 16"-20" caliper with five (5) 6" caliper of the same species.

e. Replace a 21"-36" caliper with ten (10) 6" caliper of the same species.

2. Plant Material

Replace any damaged plant material with an equal size and quantity of the same material.

The replaced trees and plant material shall be guaranteed by the Contractor for a period of six (6) months.

6.0 COORDINATION WITH N.I.C. ITEMS:

The Contractor shall give to the Engineer and/or Architect, in writing, a time schedule for the installation or removal of all N.I.C. items at the beginning of the project. Failure of the Contractor to supply the Engineer and/or Architect with said schedule shall not be used for reason of time extension by the Contractor.

7.0 ELECTRICAL SERVICE LOCATION:

The Contractor shall verify and coordinate the service location with the local power company and the Engineer and/or Architect.

The Contractor shall coordinate with the local power company and shall include in his bid all costs for electrical service to work area(s) under this Contract, including but not limited to new service, connections from existing and/or new service and all required labor, equipment, materials etc. and all other associated electrical work.

8.0 SCHEDULING:

The Contractor shall provide the City with a detailed schedule prior to start of work.

The schedule shall be a fully developed, horizontal bar-chart type Contractor's construction schedule. Provide a separate time bar for each significant construction activity. Provide a continuous vertical line to identify the first working day of each week. Use the same breakdown of units of the Work as indicated in the "Schedule of Values".

Unless otherwise directed or approved, prepare schedule on a single 8-1/2" X 14" sheet of plain bond white paper.

Secure time commitments for performing critical elements of the Work from parties involved. Coordinate each element on the schedule with other construction activities; include minor elements involved in the sequence of the Work. Show each activity in proper sequence. Indicate graphically the sequences necessary for completion of related portions of the Work.

Contractor shall also prepare schedule in accordance with applicable portions of Section 4.02 of the Agreement.

9.0 ASSIGNMENT OF CONTRACT: Not applicable.

10.0 WORKMANSHIP AND MATERIALS:

Workmanship and materials shall be installed in accordance with accepted standards of the specific trade, as defined by the applicable recognized trade association(s). In the event of a conflict between these trade standards and the Contract Documents, the conflict shall be brought to the Engineer's and/or Architect's attention writing and the final decision shall be made by the Engineer and/or Architect.

11.0 RECORD DRAWINGS:

During the course of the work, Contractor shall maintain, at the site, a clean undamaged set of the Contract Documents. Contractor shall mark set, on a daily basis, with location and progress of all contract work, including but not limited to:

1. Sewer, water, stormwater and irrigation fabrication drawings showing to scale all manholes, all distances and angles between manholes, line dimension, grid co-ordinates, trunk lines, inverts and cleanouts,

2. Fencing, roadway, parking and sleeving,

3. Electrical service, and

4. General building location, and/or foundations, structures, etc.

Drawings shall be on site at all times and available for review by the City. Failure of Contractor to have drawings on site and/or up to date may result in suspension of work until situation is corrected. Extension of contract will not be granted for such condition.

At conclusion of work, the Contractor shall provide the City with one complete set of Electronic Record Drawings incorporating changes described above, and four marked hard copy sets of as-built record drawings clean and damaged free shall also be submitted to the City at the same time. Electronic files will be issued to the Contractor by the City of Tampa. These files will be AutoCAD DWG, AutoCAD DWF or Adobe PDF latest versions.

A Work Directive Change is a written directive to the Contractor, issued on or after the date of the execution of the Agreement, and signed by the Engineer on behalf of the City, ordering an addition, deletion or revision in the work, or responding to an emergency. A Work Directive Change will not change the contract price or the time for completion, but is evidence that the parties expect that the change directed or documented by an Authorization to Proceed with Extra Work letter will be incorporated in a subsequently issued Change Order following negotiations by the parties as to its effect, if any, on the contract price or the time for completion.

12.0 ON SITE RECYCLABLE CRITERIA:

Contractor shall make reasonable attempts to recycle and/or salvage at least 50% of non-hazardous construction and demolition debris. Contractor shall develop and implement a Construction Waste Management Plan that identifies the materials that are to be diverted from disposal by weight or volume and be directed to a recycling facility. Specific area(s) on the construction site shall be designated for collection and tracking of the designated materials as needed. Location of the recycling area on site shall be coordinated with the project owner's representative on site prior to construction start. The intent of this section is to encourage recycling where practical in the context of the scope of work.

Contractor shall submit the following but not limited to items related to this section:

1. Provide a submittal of the contractor's plan of action to recycle

2. Contractor is required to document all activities with above requirements and provide to the city upon request items that are recyclable, documentation of the quantity of material disposed at a recycling facility.

City of Tampa – DMI Sub-(Contractors/Consultants/Suppliers) Payments

(FORM MBD-30)

[ ] Partial [ ] Final

Contract No.: _____ WO#,(if any):_____ Contract Name:_____

Contractor Name:_____ Address:_____

Federal ID:_____ Phone:_____ Fax:_____ Email:_____

GC Pay Period:_____ Payment Request/Invoice Number:_____ City Department:_____

Total Amount Requested for pay period: $_____ Total Contract Amount(including change orders):$_____

-Type of Ownership - (F=Female M=Male), BF BM = African Am., HF HM = Hispanic Am., AF AM = Asian Am., NF NM = Native Am., CF CM = Caucasian S = SLBE

Type Trade/Work Activity []Sub []Supplier Federal ID	Company Name Address Phone & Fax	Total Sub Contract Or PO Amount	Amount Paid To Date Amount Pending Previously Reported	Amount To Be Paid For This Period Sub Pay Period Ending Date
			$	$
			$	$
			$	$
			$	$
			$	$
			$	$

(Modifying This Form or Failure to Complete and Sign May Result in Non-Compliance)

Certification: I hereby certify that the above information is a true and accurate account of payments to sub – contractors/consultants on this contract.

Signed:_____ Name/Title:_____ Date:_____

 Note: Detailed Instructions for completing this form are on the next page

Page 2 of 2 – DMI Payment

Instructions for completing The DMI Sub-(Contractors/Consultants/ Suppliers) Payment Form

(Form MBD-30)

This form must be submitted with all invoicing or payment requests where there has been subcontracting rendered for the pay period. If applicable, after payment has been made to the subcontractor, "Waiver and Release of Lien upon Progress Payment", "Affidavit of Contractor in Connection with Final Payment", or an affidavit of payment must be submitted with the amount paid for the pay period. The following will detail what data is required for this form. The instructions that follow correspond to the headings on the form required to be completed. **(Modifying or omitted information from this form my result in non-compliance).**

- **Contract No.** This is the number assigned by the City of Tampa for the bid or proposal.
- **W.O.#** If the report covers a work order number (W.O.#) for the contract, please indicate it in that space.
- **Contract Name.** This is the name of the contract assigned by the City of Tampa for the bid or proposal.
- **Contractor Name.** The name of your business.
- **Address.** The physical address of your business.
- **Federal ID.** A number assigned to a business for tax reporting purposes.
- **Phone.** Telephone number to contact business.
- **Fax.** Fax number for business.
- **Email.** Provide email address for electronic correspondence.
- **Pay Period.** Provide start and finish dates for pay period. (e.g. 05/01/13 – 05/31/13)
- **Payment Request/Invoice Number.** Provide sequence number for payment requests. (ex. Payment one, write 1 in space, payment three, write 3 in space provided.)
- **City Department**. The City of Tampa department to which the contract pertains.
- **Total Amount Requested for pay period.** Provide all dollars you are expecting to receive for the pay period.
- **Total Contract Amount (including change orders).** Provide expected total contract amount. This includes any change orders that may increase or decrease the original contract amount.
- **Signed/Name/Title/Date**. This is your certification that the information provided on the form is accurate.
- **See attached documents.** Check if you have provided any additional documentation relating to the payment data. Located at the bottom middle of the form.
- **Partial Payment.** Check if the payment period is a partial payment, not a final payment. Located at the top right of the form.
- **Final Payment.** Check of this period is the final payment period. Located at the top right of the form.

The following instructions are for information of any and all subcontractors used for the pay period.

- **(Type) of Ownership.** Indicate the Ethnicity and Gender of the owner of the subcontracting business or SLBE.
- **Trade/Work Activity.** Indicate the trade, service, or material provided by the subcontractor.
- **SubContractor/SubConsultant/Supplier.** Please indicate status of firm on this contract.
- **Federal ID.** A number assigned to a business for tax reporting purposes. This information is critical in proper identification of the subcontractor.
- **Company Name, Address, Phone & Fax**. Provide company information for verification of payments.
- **Total Subcontract Amount.** Provide total amount of subcontract for subcontractor including change orders.
- **Amount Paid To Date.** Indicate all dollars paid to date for the subcontractor.
- **Amount Pending, Previously Reported.** Indicate any amount previously reported that payments are pending.
- **Amount To Be Paid for this Period.** Provide dollar amount of dollars requested for the pay period.
- **Sub Pay Period Ending Date.** Provide date for which subcontractor invoiced performed work.

Forms must be signed and dated or will be considered incomplete. The company authorized representative must sign and certify the information is true and accurate. Failure to sign this document or return the document unsigned can be cause for determining a company is in non-compliance of Ordinance 2008-89.

If any additional information is required or you have any questions, you may call the Minority Business Development Office at (813) 274-5522.

SIGN EXAMPLE ONLY GRAPHIC TO BE DEVELOPED BY CONTRACTOR

scale: 3" 3"

Sign Information

Building a Better Tampa

Downtown Riverwalk

Creates a waterfront pedestrian walkway connecting the south edge of the CapTrust building with MacDill Park.

$1.5 Million investment
Scheduled for completion in October 2012

Orion Marine
Construction, Inc.

Colors

Blue: Sherwin Williams Naval SW6244
Green: Sherwin Williams Center Stage SW6920
White: Sherwin Williams Pure White SW7005

Font

Franklin Gothic

K:\CA\edr\dpw project sign 4-28-04.dwg, 08/22/2005 12:32:38 PM, pw1m

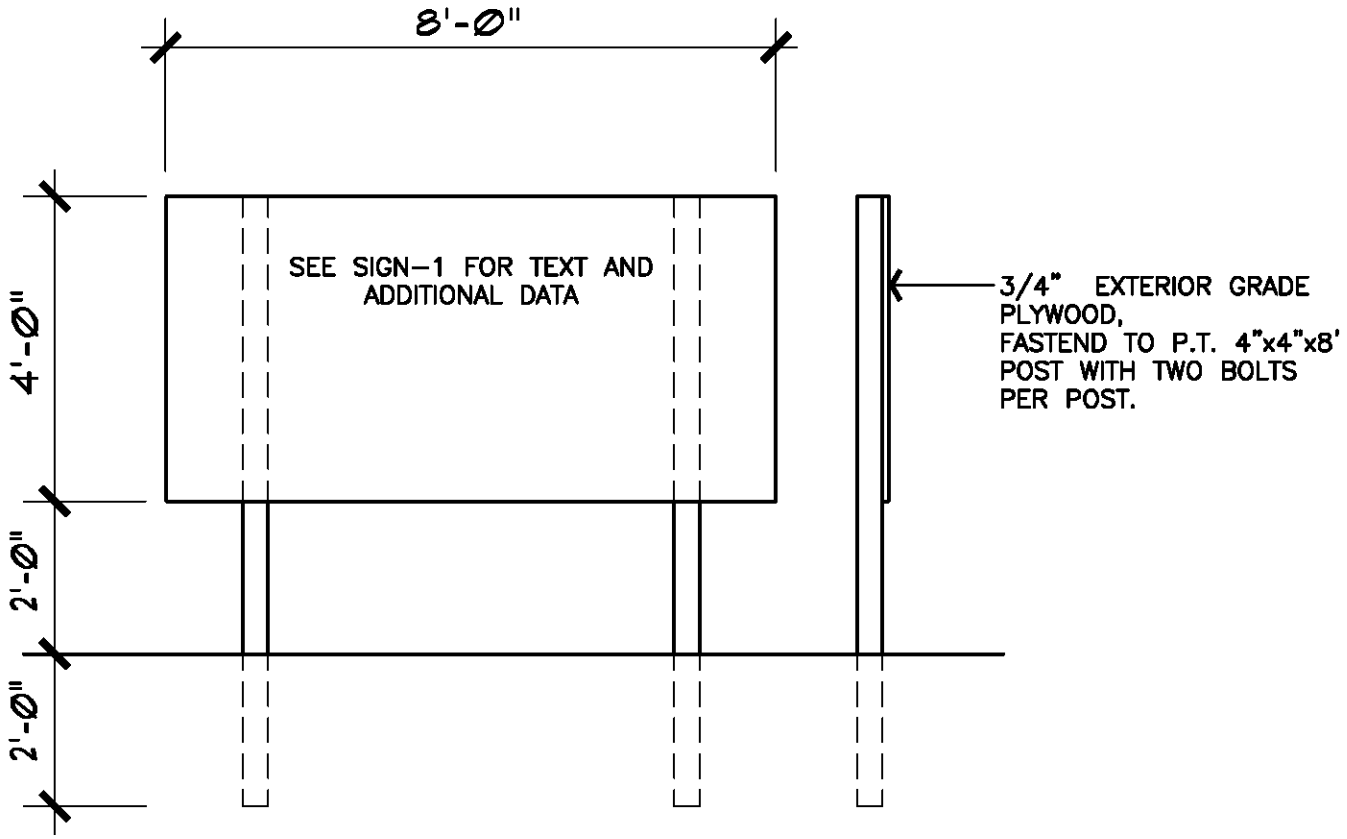

CITY OF TAMPA–PROJECT SIGN
REVISED 4/28/04

SIGN – 2

SECTION 01010 - SUMMARY OF WORK

1.0 GENERAL:

The work shall consist of furnishing all materials, labor, equipment, tools, and all items and services required for the complete construction in conformity with Contract Documents of:

Wayne C. Papy Center Addition and Renovation
at
6915 North Florida Avenue
Tampa, FL, 33604
for the
City of Tampa

All construction work and materials, in addition to complying with requirements of Contract Documents, shall fully comply with all requirements of local building codes, all ordinances, and regulations of other Federal, State and public authorities having jurisdiction over this type of work in the given area.

2.0 SCOPE:

The work shall include but not be limited to, construction of a 1,000 sf lobby addition with a steel frame superstructure, curtain wall exterior finish, standing seam metal and modified bitumen roofs, HVAC system, interior metal stud framing, drywall, finishes, painting, plumbing, with all associated work required for a complete project, as shown and indicated on the Drawings and in the Specifications.

3.0 LEGAL DESCRIPTION OF PROJECT SITE:

Legal description as shown on the drawings, Sheet G-1.

4.0 VERIFICATION OF OWNER'S SURVEY DATA:

Prior to commencing any work, the Contractor shall satisfy himself as to accuracy of all survey data which shall affect his work as indicated in these plans and specifications and/or provided by the City.

Should the Contractor discover any inaccuracies or errors which will affect his work, he shall notify the Engineer and/or Architect in order that proper adjustments can be ordered.

The exact location of the building and related items shall be determined on site jointly by the Contractor and the Engineer and/or Architect. NO work shall commence until said final approval of the locations is made by the Engineer and/or Architect.

5.0 CONTRACT DOCUMENTS:

a. BIDDING REQUIREMENTS

b. GENERAL PROVISIONS, SUPPLEMENTARY GENERAL PROVISIONS, AND SPECIAL, CONDITIONS

6.0 SPECIFICATIONS: (DATED: May, 2015)

Divisions: 1, 2, 3, 5, 6, 7, 8, 9, 10, 15

7.0 DRAWINGS: (DATED: May 2015)

Sheets: G-0.1, C-1.0, S-1, S-2, S-3, S-4, A-2.1, A2.2, A3.1, A3.2, A4.1, A5.1, A6.1, A6.2, A7.1, A7.2, A8.2, M1.0, M1.1, P1.0, P1.1, E1.0, E2.1, D3.1, E3.2, E4.1

8.0 ADDENDA AND LETTERS OF CLARIFICATION:

All addenda and letters of clarification issued prior to bid opening time date.

SECTION 01020 - ALLOWANCES

PART 1 - GENERAL

RELATED DOCUMENTS

Drawings and general provisions of the Contract, including General and Supplementary Conditions and other Division 1 Specification Sections, apply to this Section.

SUMMARY

This Section includes administrative and procedural requirements governing allowances.

Types of allowances include the following:

Contingency allowances.

SELECTION AND PURCHASE

SUBMITTALS

Submit proposals for purchase of products or systems included in allowances, in the form specified for Change Orders.

Submit invoices or delivery slips to show the actual quantities of materials delivered to the site for use in fulfillment of each allowance.

CONTINGENCY ALLOWANCES

Use the contingency allowance only as directed by the Owner.

Work Directive Change Orders authorizing use of funds from the contingency allowance will include Contractor's related costs and reasonable overhead and profit margins.

At Project closeout, credit unused amounts remaining in the contingency allowance to the Owner by Change Order.

PART 2 - PRODUCTS (Not Applicable)

PART 3 - EXECUTION

EXAMINATION

Examine products covered by an allowance promptly upon delivery for damage or defects.

PREPARATION

Coordinate materials and their installation for each allowance with related materials and installations to ensure that each allowance item is completely integrated and interfaced with related work.

SCHEDULE OF ALLOWANCES

Allowance No. 1: Include a contingency allowance of $30,000 for use according to the Owner's instructions. The allowance shall be included in the Base Bid.

END OF SECTION 01020

SECTION 01040 - PROJECT COORDINATION

PART 1 - GENERAL

RELATED DOCUMENTS

Drawings and general provisions of Contract, including General and Supplementary Conditions and other Division-1 Specification Sections, apply to this Section.

SUMMARY

This Section specifies administrative and supervisory requirements necessary for Project coordination including, but not necessarily limited to:

Coordination.
Administrative and supervisory personnel.
General installation provisions.
Cleaning and protection.

COORDINATION

Coordination: Coordinate construction activities included under various Sections of these Specifications to assure efficient and orderly installation of each part of the Work. Coordinate construction operations included under different Sections of the Specifications that are dependent upon each other for proper installation, connection, and operation.

Where installation of one part of the Work is dependent on installation of other components, either before or after its own installation, schedule construction activities in the sequence required to obtain the best results.

Where availability of space is limited, coordinate installation of different components to assure maximum accessibility for required maintenance, service and repair.

Make adequate provisions to accommodate items scheduled for later installation.

Where necessary, prepare memoranda for distribution to each party involved outlining special procedures required for coordination. Include such items as required notices, reports, and attendance at meetings.

Prepare similar memoranda for the Owner and separate Contractors where coordination of their Work is required.

Administrative Procedures: Coordinate scheduling and timing of required administrative procedures with other construction activities to avoid conflicts and ensure orderly progress of the Work. Such administrative activities include, but are not limited to, the following:

Preparation of schedules.
Installation and removal of temporary facilities.
Delivery and processing of submittals.
Progress meetings.
Project Close-out activities.

Conservation: Coordinate construction activities to ensure that operations are carried out with consideration given to conservation of energy, water, and materials.

Salvage materials and equipment involved in performance of, but not actually incorporated in, the Work. Refer to other sections for disposition of salvaged materials that are designated as Owner's property.

SUBMITTALS

Coordination Drawings: Prepare and submit coordination Drawings where close and careful coordination is required for installation of products and materials fabricated off-site by separate entities, and where limited space availability necessitates maximum utilization of space for efficient installation of different components.

Show the interrelationship of components shown on separate Shop Drawings.

Indicate required installation sequences.

Refer to Division-15 Section "Basic Mechanical Requirements," and Division-16 Section "Basic Electrical Requirements" for specific coordination Drawing requirements for mechanical and electrical installations.

Staff Names: At the Preconstruction Conference, submit a list of the Contractor's principal staff assignments, including the Superintendent and other personnel in attendance at the site; identify individuals, their duties and responsibilities; list their addresses and telephone numbers.

Post copies of the list in the Project meeting room, the temporary field office, and each temporary telephone.

PART 2 - PRODUCTS (Not Applicable).

PART 3 - EXECUTION

GENERAL INSTALLATION PROVISIONS

Inspection of Conditions: Require the Installer of each major component to inspect both the substrate and conditions under which Work is to be performed. Do not proceed until unsatisfactory conditions have been corrected in an acceptable manner.

Manufacturer's Instructions: Comply with manufacturer's installation instructions and recommendations, to the extent that those instructions and recommendations are more explicit or stringent than requirements contained in Contract Documents.

Inspect materials or equipment immediately upon delivery and again prior to installation. Reject damaged and defective items.

Provide attachment and connection devices and methods necessary for securing Work. Secure Work true to line and level. Allow for expansion and building movement.

Visual Effects: Provide uniform joint widths in exposed Work. Arrange joints in exposed Work to obtain the best visual effect. Refer questionable choices to the Architect for final decision.

Recheck measurements and dimensions, before starting each installation.

Install each component during weather conditions and Project status that will ensure the best possible results. Isolate each part of the completed construction from incompatible material as necessary to prevent deterioration.

Coordinate temporary enclosures with required inspections and tests, to minimize the necessity of uncovering completed construction for that purpose.

Mounting Heights: Where mounting heights are not indicated, install individual components at standard mounting heights recognized within the industry for the particular application indicated. Refer questionable mounting height decisions to the Architect for final decision.

CLEANING AND PROTECTION

During handling and installation, clean and protect construction in progress and adjoining materials in place. Apply protective covering where required to ensure protection from damage or deterioration at Substantial Completion.

Clean and maintain completed construction as frequently as necessary through the remainder of the construction period. Adjust and lubricate operable components to ensure operability without damaging effects.

Limiting Exposures: Supervise construction activities to ensure that no part of the construction, completed or in progress, is subject to harmful, dangerous, damaging, or otherwise deleterious exposure during the construction period. Where applicable, such exposures include, but are not limited to, the following:

Excessive static or dynamic loading.
Excessive internal or external pressures.
Excessively high or low temperatures.
Thermal shock.
Excessively high or low humidity.
Air contamination or pollution.
Water or ice.
Solvents.
Chemicals.
Light.
Radiation.
Puncture.
Abrasion.
Heavy traffic.
Soiling, staining and corrosion.
Bacteria.
Rodent and insect infestation.
Combustion.
Electrical current.

High speed operation,
Improper lubrication,
Unusual wear or other misuse.
Contact between incompatible materials.
Destructive testing.
Misalignment.
Excessive weathering.
Unprotected storage.
Improper shipping or handling.
Theft.
Vandalism.

END OF SECTION 01040

SECTION 02010 - SUBSURFACE SOIL INVESTIGATION

PART 1 - GENERAL

RELATED DOCUMENTS:

The Bidding Requirements, Contractual Conditions, and General Requirements of Division One shall apply to all work hereunder.

WORK INCLUDED:

Subsurface soil investigation provided by an independent testing laboratory is included herein.

This Section, including evaluations, recommendations, and design for excavation, de-watering, foundation and pavements is included for informational purposes only. The Architect makes no claim as to the accuracy of such information.

CONTRACTOR RESPONSIBILITIES:

Verification: Prior to commencing any excavation, grading or construction, the Contractor shall satisfy himself as to the accuracy of all survey data as indicated in these Drawings and Specifications and/or as provided by the Owner. Should the Contractor discover any inaccuracies, errors or omissions in the survey data, he shall immediately notify the Project Architect in order that proper adjustments can be anticipated and ordered. Commencement by the Contractor, or of any excavation, grading or construction, shall be held as an acceptance of the survey data by him after which time the Contractor has no claim against the Owner resulting from alleged errors, omissions or inaccuracies of the said survey data.

END OF SECTION 02010

SECTION 02060 - BUILDING DEMOLITION

PART 1 - GENERAL

RELATED DOCUMENTS

Drawings and general provisions of the Contract, including General and Supplementary Conditions and Division 1 Specification Sections, apply to this Section.

SUMMARY

This Section includes the following:

Demolition and removal of buildings.

Demolition and removal of structures.

Demolition and removal of site improvements.

Disconnecting, capping or sealing, and abandoning site utilities in place.

Disconnecting, capping or sealing, and removing site utilities.

Related Sections: The following Sections contain requirements that relate to this Section:

Division 1 Section "Cutting and Patching" for cutting and patching procedures for demolition operations.

Division 1 Section "Schedules and Reports" for demolition schedule requirements.

Division 1 Section "Construction Facilities and Temporary Controls" for temporary utilities, temporary construction and support facilities, temporary security and protection facilities, and environmental protection measures for demolition operations.

Division 1 Section "Contract Closeout" for record document requirements.

Division 2 Section "Selective Demolition" for partial demolition of a building or structure undergoing alterations and for the removal, salvage, or reuse of materials in new construction.

Division 2 Section "Tree Protection and Trimming" for protecting trees remaining on-site.

Division 2 Section "Site Clearing" for site clearing and removing above- and below-grade improvements.

Division 2 Section "Earthwork" for soil materials, excavating, backfilling, and site grading.

DEFINITIONS

Remove: Remove and legally dispose of items except those indicated to be reinstalled, salvaged, or to remain the Owner's property.

Remove and Salvage: Items indicated to be removed and salvaged remain the Owner's property. Remove, clean, and pack or crate items to protect against damage. Identify contents of containers and deliver to Owner's designated storage area.

Remove and Reinstall: Remove items indicated; clean, service, and otherwise prepare them for reuse; store and protect against damage. Reinstall items in locations indicated.

Existing to Remain: Protect construction indicated to remain against damage and soiling during demolition. When permitted by the Architect, items may be removed to a suitable, protected storage location during demolition and then cleaned and reinstalled in their original locations.

MATERIALS OWNERSHIP

Except for items or materials indicated to be reused, salvaged, or otherwise indicated to remain the Owner's property, demolished materials shall become the Contractor's property and shall be removed from the site with further disposition at the Contractor's option.

Historical items indicated remain the Owner's property. Carefully remove and salvage each item in a manner to prevent damage and deliver promptly to the Owner.

Historical items, relics, and similar objects including, but not limited to, cornerstones and their contents, commemorative plaques and tablets, antiques, and other items of interest or value to the Owner, which may be encountered during demolition, remain the Owner's property. Carefully remove and salvage each item or object in a manner to prevent damage and deliver promptly to the Owner.

Cooperate with Owner's archaeologist or historical adviser.

SUBMITTALS

General: Submit each item in this Article according to the Conditions of the Contract and Division 1 Specification Sections, for information only, unless otherwise indicated.

Proposed dust-control measures.

Proposed noise-control measures.

Schedule of demolition activities indicating the following:

Detailed sequence of demolition and removal work, with starting and ending dates for each activity.

Dates for shutoff, capping, and continuation of utility services.

Inventory of items to be removed and salvaged.

Inventory of items to be removed by Owner.

Photographs or videotape, sufficiently detailed, of existing conditions of adjoining construction and site improvements that might be misconstrued as damage caused by demolition operations.

Record drawings at Project closeout according to Division 1 Section "Contract Closeout."

Identify and accurately locate capped utilities and other subsurface structural, electrical, or mechanical conditions.

Landfill records for record purposes indicating receipt and acceptance of hazardous wastes by a landfill facility licensed to accept hazardous wastes.

QUALITY ASSURANCE

Demolition Firm Qualifications: Engage an experienced firm that has successfully completed demolition Work similar to that indicated for this Project.

Regulatory Requirements: Comply with governing EPA notification regulations before starting demolition. Comply with hauling and disposal regulations of authorities having jurisdiction.

Predemolition Conference: Conduct conference at Project site to comply with preinstallation conference requirements of Division 1 Section "Project Meetings."

PROJECT CONDITIONS

Buildings to be demolished will be vacated and their use discontinued before start of Work.

Owner assumes no responsibility for actual condition of buildings to be demolished.

Conditions existing at time of inspection for bidding purpose will be maintained by Owner as far as practical.

Asbestos: It is not expected that asbestos will be encountered in the course of this Contract. If any materials suspected of containing asbestos are encountered, do not disturb the materials. Immediately notify the Architect and the Owner.

Storage or sale of removed items or materials on-site will not be permitted.

SCHEDULING

Arrange demolition schedule so as not to interfere with Owner's on-site operations.

PART 2 - PRODUCTS (Not Applicable)

SOIL MATERIALS

Requirements for satisfactory soil materials are specified in Division 2 Section "Earthwork."

Obtain approved borrow soil materials off-site when sufficient satisfactory soil materials are not available on-site.

PART 3 - EXECUTION

EXAMINATION

Verify that utilities have been disconnected and capped.

Survey existing conditions and correlate with requirements indicated to determine extent of demolition required.

Inventory and record the condition of items to be removed and reinstalled and items to be removed and salvaged.

Survey the condition of the building to determine whether removing any element might result in a structural deficiency or unplanned collapse of any portion of the structure or adjacent structures during demolition.

Perform surveys as the Work progresses to detect hazards resulting from demolition activities.

UTILITY SERVICES

Maintain existing utilities indicated to remain in service and protect them against damage during demolition operations.

Do not interrupt existing utilities serving occupied or operating facilities, except when authorized in writing by Owner and authorities having jurisdiction. Provide temporary services during interruptions to existing utilities, as acceptable to Owner and to governing authorities.

Provide not less than 72 hours' notice to Owner if shutdown of service is required during changeover.

Owner will arrange for disconnecting and sealing indicated utilities serving structures to be demolished before start of demolition work, when requested by Contractor.

Utility Requirements: Locate, identify, disconnect, and seal or cap off indicated utility services serving structures to be demolished.

Owner will arrange to shut off indicated utilities when requested by Contractor.

Arrange to shut off indicated utilities with utility companies.

Utility Requirements: Refer to Division 15 and 16 Sections for shutting off, disconnecting, removing, and sealing or capping utility services. Do not start demolition work until utility disconnecting and sealing have been completed and verified in writing.

PREPARATION

Drain, purge, or otherwise remove, collect, and dispose of chemicals, gases, explosives, acids, flammables, or other dangerous materials before proceeding with demolition operations.

Employ a certified, licensed exterminator to treat building and to control rodents and vermin before and during demolition operations.

Conduct demolition operations and remove debris to ensure minimum interference with roads, streets, walks, and other adjacent occupied and used facilities.

Do not close or obstruct streets, walks, or other adjacent occupied or used facilities without permission from Owner and authorities having jurisdiction. Provide alternate routes around closed or obstructed traffic ways if required by governing regulations.

Conduct demolition operations to prevent injury to people and damage to adjacent buildings and facilities to remain. Ensure safe passage of people around demolition area.

Erect temporary protection, such as walks, fences, railings, canopies, and covered passageways, where required by authorities having jurisdiction.

Protect existing site improvements, appurtenances, and landscaping to remain.

Erect a plainly visible fence around drip line of individual trees or around perimeter drip line of groups of trees to remain.

Provide and maintain interior and exterior shoring, bracing, or structural support to preserve stability and prevent movement, settlement, or collapse of buildings to be demolished and adjacent buildings to remain.

Strengthen or add new supports when required during progress of demolition.

EXPLOSIVES

Explosives: Use of explosives will not be permitted.

Explosives: Do not bring explosives to the site or use explosives without written consent of Owner and authorities having jurisdiction. Such written consent will not relieve Contractor of total responsibility for injury to people or for damage to property due to blasting operations. Perform required blasting in compliance with governing regulations.

POLLUTION CONTROLS

Use water mist, temporary enclosures, and other suitable methods to limit the spread of dust and dirt. Comply with governing environmental protection regulations.

Do not create hazardous or objectionable conditions, such as ice, flooding, and pollution, when using water.

Remove and transport debris in a manner that will prevent spillage on adjacent surfaces and areas.

Remove debris from elevated portions of building by chute, hoist, or other device that will convey debris to grade level.

Clean adjacent buildings and improvements of dust, dirt, and debris caused by demolition operations. Return adjacent areas to condition existing before start of demolition.

DEMOLITION

Building Demolition: Demolish buildings completely and remove from the site. Use methods required to complete Work within limitations of governing regulations and as follows:

Locate demolition equipment throughout the building and remove debris and materials so as not to impose excessive loads on supporting walls, floors, or framing.

Dispose of demolished items and materials promptly. On-site storage or sale of removed

items is prohibited.

Small buildings may be removed intact when permitted by Architect and approved by authorities having jurisdiction.

Demolish concrete and masonry in small sections.

Remove structural framing members and lower to ground by method suitable to avoid free fall and to prevent ground impact or dust generation.

Break up and remove concrete slabs on grade, unless otherwise shown to remain.

Remove air-conditioning equipment without releasing refrigerants.

Below-Grade Construction: Demolish foundation walls and other below-grade construction, as follows:

Remove below-grade construction, including foundation walls, to at least 12 inches (300 mm) below grade.

Remove below-grade construction, including foundation walls and footings, to the depths indicated.

Completely remove below-grade construction, including foundation walls and footings.

Break up and remove below-grade concrete slabs, unless indicated to remain.

Break up below-grade concrete slabs into sections no larger than 24 inches (600 mm) square and leave in place.

Filling Below-Grade Areas: Completely fill below-grade areas and voids resulting from demolition of buildings and pavements with soil materials according to requirements specified in Division 2 Section "Earthwork."

Damages: Promptly repair damages to adjacent facilities caused by demolition operations.

DISPOSAL OF DEMOLISHED MATERIALS

General: Promptly dispose of demolished materials. Do not allow demolished materials to accumulate on-site.

Burning: Do not burn demolished materials.

Burning: Burning of demolished materials will be permitted only at designated areas on Owner's property, providing required permits are obtained. Provide full-time monitoring for burning materials until fires are extinguished.

Disposal: Dispose of demolished materials at designated spoil areas on Owner's property.

Disposal: Transport demolished materials off Owner's property and legally dispose of them.

END OF SECTION 02060

SECTION 02200 - EARTHWORK

1.0 GENERAL

1.1 RELATED DOCUMENTS:

Drawings and general provisions of the Contract, including General and Supplementary Provisions, Special Conditions and Section-1 Specification sections, apply to work of this section.

Furnish all labor, materials, tools, equipment, etc., and services necessary and incidental to the complete fabrication, furnishing and erection of this section as shown, noted, detailed and reasonably implied on the drawings and in the specifications.

1.2 DESCRIPTION OF WORK:

The extent of earthwork is shown on drawings.

Preparation of subgrade for building slabs, walks, courts, and pavements is included as part of this work.

Backfilling of trenches within building lines is included as part of this work.

1.3 QUALITY ASSURANCE:

Codes and Standards: Perform excavation work in compliance with applicable requirements of governing authorities having jurisdiction.

Testing and Inspection Service:

An independent Testing Laboratory, paid for by the City of Tampa, shall be retained to make tests for compaction.

The results of such tests shall be immediately reported to the Engineer and/or Architect. Should any of the densities fail to meet the design criteria, the area shall be recompacted and retested at the expense of the Contractor.

Field density tests shall be taken throughout the site preparation and fill operation to insure that adequate compaction has been achieved.

1.4 JOB CONDITIONS:

Prior to commencement of work, the Contractor shall identify, by field verification, sufficient existing grade elevations for the project site. The Contractor shall verify and use existing grade elevations shown on drawings. The Contractor shall slope sidewalks and grades sufficiently to tie into the finish floor elevation. Sidewalks shall be maintained at a 1:20 slope. Prior to installation of work, the Contractor shall coordinate with the City Architect, all proposed grades and sidewalk slopes.

Existing Utilities: Locate existing underground utilities in areas of work. If utilities are to remain in place, provide adequate means of protection during earthwork operations.

Should uncharted, or incorrectly charted, piping or other utilities be encountered during excavation, consult City immediately for directions. The Contractor shall cooperate with City and utility companies in keeping respective services and facilities in operation. Repair utilities damaged as a result of the work to satisfaction of the Engineer and/or Architect and utility owner.

All existing utilities encountered in the construction of the project shall be relocated, removed or capped as required by the Engineer and/or Architect.

Do not interrupt existing utilities serving facilities occupied and used by the City or others, except when permitted in writing by Engineer and/or Architect and then only after acceptable temporary utility services have been provided.

Demolish and completely remove from site existing underground utilities indicated to be removed. Coordinate with utility companies for shut-off of services if lines are inactive.

Use of Explosives:

The use of explosives is not permitted.

Protection of Persons and Property: Barricade open excavations occurring as part of this work and post with warning lights.

Operate warning lights as recommended by authorities having jurisdiction.

Protect structures, utilities, sidewalks, pavements, and other facilities from damage caused by settlement, lateral movement, undermining, washout and other hazards created by earthwork operations.

2.0 PRODUCTS

2.1 SOIL MATERIALS:

Definitions:

Satisfactory soil materials are defined as those complying with American Association of State Highway and Transportation Officials (AASHTO) M145, soil classification Groups A-1, A-2-4, A-2-5, and A-3.

Unsatisfactory soil materials are those defined in AASHTO M145 soil classification Groups A-2-6, A-2-7, A-4, A-5, A-6, and A-7; also peat and other highly organic soils.

Base Material: Naturally or artificially graded mixture of natural, or crushed gravel, crushed stone, crushed slag, natural, or crushed sand.

Drainage Fill: Washed, evenly graded mixture of crushed stone, or crushed or uncrushed gravel, with 100% passing a 1 1/2" sieve and not more than 5% passing a No. 4 sieve.

Backfill and Fill Materials: Satisfactory soil materials free of clay, rock or gravel larger than 2" in any dimension, debris, waste, frozen materials, vegetable, and other deleterious matter.

3.0 EXECUTION

3.1 EXCAVATION:

Excavation consists of removal and disposal of material encountered when establishing required finish grade elevations.

Earth excavation includes removal and disposal of pavements and other obstructions visible on ground surface, underground structures and utilities indicated to be demolished and removed, material of any classification indicated in data on subsurface conditions, and other materials encountered that are not classified as rock excavation or unauthorized excavation.

Unauthorized excavation consists of removal of materials beyond indicated subgrade elevations or dimensions without specific direction of the Engineer and/or Architect. Unauthorized excavation, as well as remedial work directed by Engineer and/or Architect, shall be at Contractor's expense.

Under footings, foundation bases, or retaining walls, fill unauthorized excavation by extending indicated bottom elevation of footing or base to excavation bottom, without altering required top elevation. Lean concrete fill may be used to bring elevations to proper position, when acceptable to Engineer and/or Architect.

Elsewhere, backfill and compact unauthorized excavations as specified for authorized excavations of same classification, unless otherwise directed by Engineer and/or Architect.

Additional Excavation: When excavation has reached required subgrade elevations, notify Engineer and/or Architect who will make an inspection of conditions.

If unsuitable bearing materials are encountered at required subgrade elevations, carry excavations deeper and replace excavated material as directed by Engineer and/or Architect.

Removable of unsuitable material and its replacement as directed will be paid on basis of contract conditions relative to changes in work.

Stability of Excavations: Slope sides of excavations to comply with local codes and ordinances having jurisdiction. Shore and brace where sloping is not possible because of space restrictions or stability of material excavated.

Maintain sides and slopes of excavations in safe condition until completion of backfilling.

Shoring and Bracing: Provide materials for shoring and bracing, such as sheet piling, uprights, stringers and cross-braces, in good serviceable condition.

Establish requirements for trench shoring and bracing to comply with local codes and authorities having jurisdiction.

Maintain shoring and bracing in excavations regardless of time period excavations will be open. Carry down shoring and bracing as excavation progresses.

Dewatering: Prevent surface water and subsurface or ground water from flowing into excavations and from flooding project site and surrounding area.

Do not allow water to accumulate in excavations. Remove water to prevent softening of foundation bottoms, undercutting footings, and soil changes detrimental to stability of subgrades and foundations. Provide and maintain pumps, well points, sumps, suction and discharge lines, and other dewatering system components necessary to convey water from the excavations.

Convey water removed from excavations and rain water to collecting or run-off areas. Establish and maintain temporary drainage ditches and other diversions outside excavation limits for each structure. Do not use trench excavations as temporary drainage ditches.

Material Storage: Stockpile satisfactory excavated materials where directed, until required for backfill or fill. Place, grade and shape stockpiles for proper drainage.

Locate and retain soil materials away from edge of excavations.

Dispose of excess soil material and waste materials as herein specified.

Excavation for Structures: Conform to elevations and dimensions shown within a tolerance of plus or minus 0.10', and extending a sufficient distance from footings and foundations to permit placing and removal of concrete formwork, installation of services, other construction, and for inspection.

In excavating for footings and foundation, take care not to disturb bottom of excavation. Excavate by hand to final grade just before concrete reinforcement is placed. Trim bottoms to required lines and grades to leave solid base to receive other work.

Excavation for Pavements: Cut surface under pavements to comply with cross-sections, elevations and grades as shown.

Excavation for Trenches: Dig trenches to the uniform width required for particular item to be installed, sufficiently wide to provide ample working room.

Excavate trenches to depth indicated or required. Carry depth of trenches for piping to establish indicated flow lines and invert elevations. Beyond building perimeter, keep bottoms of trenches sufficiently below finish grade to avoid freeze-ups.

Grade bottoms of trenches as indicated, notching under pipe bells to provide solid bearing for entire body of pipe.

Do not backfill trenches until tests and inspections have been made and backfilling authorized by Engineer and/or Architect. Use care in backfilling to avoid damage or displacement of pipe systems.

Cold Weather Protection: Protect excavation bottoms against freezing when atmospheric temperature is less than 35 degrees F. (1 degree C).

3.2 COMPACTION:

General: Control soil compaction during construction providing minimum percentage of density specified for each area classification.
An independent testing laboratory, paid for by the City of Tampa, shall be retained to make tests for compaction.

Percentage of Maximum Density Requirements: Compact soil to not less than the following percentages of maximum dry density for soils which exhibit a well-defined moisture density
relationship determined in accordance with ASTM D 1557; and not less than the following percentages of relative density, determined in accordance with ASTM D 2049, for soils which will not exhibit a well-defined moisture-density relationship.

Structures: Compact top 12" of subgrade and each layer of backfill or fill material at 95% maximum dry density or 90% relative dry density.

Building Slabs and Steps: Compact top 12" of subgrade and each layer of backfill or fill material at 95% maximum dry density or 90% relatively dry density.

Lawn or Unpaved Areas: Compact top 6" of subgrade and each layer of backfill or fill material at 90% maximum dry density.

Walkways: Compact top 6" of subgrade and each layer of backfill or fill material at 95% maximum dry density.

Pavements: Compact top 12" of subgrade and each layer of backfill or fill material at 95% maximum dry density.

Moisture Control: Where subgrade or layer of soil material must be moisture conditioned before compaction, uniformly apply water to surface of subgrade, or layer of soil material, to prevent free water appearing on surface during or subsequent to compaction operations.

that is too wet to permit compaction to specified density.

Soil material that has been removed because it is too wet to permit compaction may be stockpiled or spread and allowed to dry. Assist drying by discing, harrowing or pulverizing until moisture content is reduced to a satisfactory value.

3.3 BACKFILL AND FILL:

General: Place acceptable soil material in layers to required subgrade elevations, for each area classification listed below.

In excavations, use satisfactory excavated or borrow material.

Under grassed areas, use satisfactory excavated or borrow material.

Under walks and pavements, use base material or satisfactory excavated or borrow material, or combination of both.

Under building slabs, use drainage fill materials.

Backfill excavations as promptly as work permits, but not until completion of the following:

Acceptance of construction below finish grade including, where applicable, dampproofing, waterproofing, and perimeter insulation.

Inspection, testing, approval, and recording locations of underground utilities.

Removal of concrete formwork.

Removal of shoring and bracing, and backfilling of voids with satisfactory materials. Cut off temporary sheet piling driven below bottom of structures and remove in manner to prevent settlement of the structure or utilities, or leave in place if required.

Removal of trash and debris.

Permanent or temporary horizontal bracing is in place on horizontally supported walls.
Ground Surface Preparation: Remove vegetation, debris, unsatisfactory soil materials, obstructions, and deleterious materials from ground surface prior to placement of fills. Plow, strip, or break-up sloped surfaces steeper than 1 vertical 4 horizontal so that fill material will bond with existing surface.

When existing ground surface has a density less than that specified under "Compaction" for particular area classification, break up ground surface, pulverize, moisture-condition to optimum moisture content, and compact to required depth and percentage of maximum density.

Placement and Compaction: Place backfill and fill materials in layers not more than 8" in loose depth for material compacted by heavy compaction equipment, and not more than 4" in loose depth for material compacted by hand-operated tampers.

Before compaction, moisten or aerate each layer as necessary to provide optimum moisture content. Compact each layer to required percentage of maximum dry density for each area classification. Do not place backfill or fill material on surfaces that are muddy, frozen, or contain frost or ice.

Place backfill and fill materials evenly adjacent to structures, to required elevations. Take care to prevent wedging action of backfill against structures by carrying material uniformly around structure to approximately same elevation in each lift.

3.4 GRADING:

General: Uniformly grade areas within limits of grading under this section, including adjacent transition areas. Smooth finished surface within specified tolerances, compact with uniform levels or slopes between points where elevations are shown, or between such points and existing grades.

Grading Outside Building Lines: Grade areas adjacent to building lines to drain away from structures and to prevent ponding.

Finish surfaces free from irregular surface changes, and as follows:

Lawn or Unpaved Areas: Finish areas to receive topsoil to within not more than 0.10' above or below required subgrade elevations.

Walks: Shape surface of areas under walks to line, grade and cross-section, with finish surface not more than 0.10' above or below required subgrade elevation.

Pavements: Shape surface of areas under pavement to line, grade and cross-section, with finish surface not more than 1/2" above or below required subgrade elevation.

Grading Surface of Fill Under Building Slabs: Grade smooth and even, free of voids, compacted as specified, and to required elevation. Provide final grades within a tolerance of 1/2" when tested with a 10' straightedge.

Compaction: After grading, compact subgrade surfaces to the depth and percentage of maximum density for each area classification.

3.5 PAVEMENT BASE COURSE:

Not Applicable.

3.6 BUILDING SLAB DRAINAGE COURSE:

Not Applicable.

3.7 FIELD QUALITY CONTROL:

Quality Control Testing During Construction: Allow testing service to inspect and approve subgrades and fill layers before further construction work is performed.

Perform field density tests in accordance with ASTM D 1556 (sand cone method), ASTM D 2167 (rubber balloon method), or ASTMD -2972-71 (nuclear method) as applicable.

Footing Subgrade: For each strata of soil on which footings will be placed, conduct at least one test to verify required design bearing capacities. Subsequent verification and approval of each footing subgrade may be based on a visual comparison of each subgrade with related tested strata, when acceptable to Engineer and/or Architect.

Paved Areas and Building Slab Subgrade: Make at least one field density test of subgrade for every 2000 sq. ft. of paved area or building slab, but in no case less than 3 tests. In each compacted fill layer, make one field density test for every 2000 sq. ft. of overlaying building slab or paved area, but in no case less than 3 tests.

Foundation Wall Backfill: Take at least 2 field density tests, at locations and elevations as directed.

If in opinion of the Engineer and/or Architect, based on testing service reports and inspection, subgrade or fills which have been placed are below specified density, provide

3.8 MAINTENANCE:

Protection of Graded Areas: Protect newly graded areas from traffic and erosion. Keep free of trash and debris.

Repair and re-establish grades in settled, eroded, and rutted areas to specified tolerances.

Reconditioning Compacted Areas: Where completed compacted areas are disturbed by subsequent construction operations or adverse weather, scarify surface, re-shape, and compact to required density prior to further construction.

3.9 DISPOSAL OF EXCESS AND WATER MATERIALS:

Removal to Designated Areas on City's Property:

Transport acceptable excess excavated material to designated soil storage areas on City's property. Stockpile soil or spread as directed by the Engineer and/or Architect.

Removal from City's Property:

Remove waste materials, including unacceptable excavated material, trash and debris, and dispose of it off City's property.

END OF SECTION 02200.

SECTION 02282 - TERMITE CONTROL

PART 1 - GENERAL

RELATED DOCUMENTS

Drawings and general provisions of Contract, including General and Supplementary Conditions and Division-1 Specification sections, apply to work of this section.

SUMMARY

Provide soil treatment for termite control, as herein specified.

SUBMITTALS

Product Data: Submit manufacturer's technical data and application instructions.

QUALITY ASSURANCE

In addition to requirements of these specifications, comply with manufacturer's instructions and recommendations for work, including preparation of substrate and application.

Engage a professional pest control operator, licensed in accordance with regulations of governing authorities for application of soil treatment solution.

Use only termiticides which bear a Federal registration number of the U.S. Environmental Protection Agency.

JOB CONDITIONS

Restrictions: Do not apply soil treatment solution until excavating, filling and grading operations are completed, except as otherwise required in construction operations.

To insure penetration, do not apply soil treatment to frozen or excessively wet soils or during inclement weather. Comply with handling and application instructions of the soil toxicant manufacturer.

SPECIFIC PRODUCT WARRANTY

Furnish written warranty certifying that applied soil termiticide treatment will prevent infestation of subterranean termites and, that if subterranean termite activity is discovered during warranty period, Contractor will re-treat soil and repair or replace damage caused by termite infestation.

Provide warranty for a period of 5 years from date of treatment, signed by Applicator and Contractor.

PART 2 - PRODUCTS

SOIL TREATMENT SOLUTION

Use an emulsible concentrate termiticide for dilution with water, specially formulated to prevent

infestation by termites. Fuel oil will not be permitted as a diluent. Provide a solution consisting of one of following chemical elements and concentrations:

Chloropyrifos ("Dursban TC"); 1.0 percent in water emulsion.

Permathrin ("Dragnet", "Torpedo"); 0.5 percent in water emulsion.

Other solutions may be used as recommended by Applicator if also acceptable to Architect and approved for intended application by jurisdictional authorities. Use only soil treatment solutions which are not injurious to planting.

PART 3 - EXECUTION

APPLICATION

Surface Preparation: Remove foreign matter which could decrease effectiveness of treatment on areas to be treated. Loosen, rake and level soil to be treated, except previously compacted areas under slabs and foundations. Toxicants may be applied before placement of compacted fill under slabs, if recommended by toxicant manufacturer.

Application Rates: Apply soil treatment solution as follows:

Under slab-on-grade structures, treat soil before concrete slabs are placed, using the following rates of application:

Apply 4 gallons of chemical solution per 10 lin. ft. to soil in critical areas under slab, including entire inside perimeter inside of foundation walls, along both sides of interior partition walls, around plumbing pipes and electric conduit penetrating slab, and around interior column footers.

Apply one gallon of chemical solution per 10 sq. ft. as an overall treatment under slab and attached slab areas where fill is soil or unwashed gravel. Apply 1-1/2 gallons of chemical solution to areas where fill is washed gravel or other coarse absorbent material.

Apply 4 gallons of chemical solution per 10 lin. ft. of trench, for each foot of depth from grade to footing, along outside edge of building. Dig a trench 6" to 8" wide along outside of foundation to a depth of not less than 12". Punch holes to top of footing at not more than 12" o.c. and apply chemical solution. Mix chemical solution with the soil as it is being replaced in trench.

At expansion joints, control joints, and areas where slabs will be penetrated, apply at rate of 4 gals. per 10 lin. ft. of penetration.

Post signs in areas of application to warn workers that soil termiticide treatment has been applied. Remove signs when areas are covered by other construction.

Reapply soil treatment solution to areas disturbed by subsequent excavation, landscape grading, or other construction activities following application.

END OF SECTION 02282

SECTION 02813 – IRRIGATION SYSTEMS

PART 1 - GENERAL

1.1 RELATED DOCUMENTS

A. Drawings and general provisions of the Contract, including General and Supplementary Conditions and Division 1 Specification Sections, apply to this Section.

1.2 SUMMARY

A. This Section includes piping, valves, sprinklers, lawn sprinkler specialties, controls, and wiring.

1.3 DEFINITIONS

A. Lateral Piping: Downstream from control valves to sprinklers, specialties, and drain valves. Piping is under pressure during flow.

B. Drain Piping: Downstream from circuit piping drain valves. Piping is not under pressure.

C. Main Piping: Downstream from point of connection to water distribution piping to and including control valves. Piping is under water distribution system pressure.

D. The following are industry abbreviations for plastic materials:

1. ABS: Acrylonitrile-butadiene-styrene plastic.
2. NP: Nylon plastic.
3. PE: Polyethylene plastic.
4. PP: Polypropylene plastic.
5. PTFE: Polytetrafluoroethylene plastic.
6. PVC: Polyvinyl chloride plastic.

1.4 SYSTEM PERFORMANCE REQUIREMENTS

A. Minimum Water Coverage: 100 percent (head to head) of turf areas and 100 percent of planting bed areas.

B. Location of Sprinklers and Specialties: Design location is approximate. Make minor adjustments necessary to avoid plantings and obstructions such as signs and light standards.

1.5 SUBMITTALS

A. Qualifications: The contractor shall submit complete qualification statements as specified herein for review and approval at the time proposals is submitted.

B. Work Schedule: Within 10 days after award of contract, the contractor shall submit to the Owner a work schedule.

C. Product Data: Within 10 days after the award of contract, the contractor shall provide cut sheets of all products specified or required for use necessary to provide the entire system outlined in the specifications. The cut sheets shall list:

1. Manufacturer's name
2. Catalog name
3. Catalog number
4. Size
5. Typed
6. Illustration of the product to be supplied

D. Test Reports: As specified in "Field Quality Control" Article in Part 3.

E. As-Built Drawings:

1. Prepare an As-Built drawing on clean construction drawings to show deviations of horizontal and vertical dimensions from the bid documents made during construction affecting but not limited to the mainline pipe, lateral pipe sprinkler heads, point of connection to the water source, controller locations, remote control valves, quick coupler valves, and gate valves. The drawings shall also indicate and show approved substitutions of size, material, manufacturers name and catalog number. All mainline piping shall be dimensioned and drawn to scale. All valve types shall have two (2) measurements from fixed objects for each valve. All zone valves shall be labeled with their correct size, GPM and station number as sequenced on the automatic control timer. Upon the completion of the irrigation installation and final approval of the as-built drawings the contractor shall have the information transferred to the computer CAD diskette and submitted to the architect for acceptance.

2. Store As-Built drawings apart from documents used for construction.

3. Maintain drawings in a clean, dry, legible condition and in good order. Do not use the record documents for construction purposes.

4. Make documents available at all times for inspection by the Design Professional or the owner's Representative.

5. Label each document As-Built in neat, large printed letters or by rubber stamp.

6. Record information concurrently with construction process. Do not conceal any work until required information is recorded.

7. Drawings: Legibly mark to record actual construction and installation, including:
   a. Horizontal and vertical locations of underground utilities and appurtenances referenced to permanent surface improvements.
   b. Field changes of dimension and detail.
   c. Changes made by Change Order or Field Order.
   d. Details not on original contract drawings.

8. Specifications and Addenda: Legibly mark each Section to record changes made by field order or change order.

9. Prior to final inspection and contract closeout, the contractor shall deliver the complete set of as-builts fully updated containing the information outlined above to the Architect for review. Additionally, the contractor shall furnish the as-built information on a CAD file

(base diskette to be furnished by the Architect). These files shall be delivered to the Design Professional following the initial review and approval of the As-Builts.

10. As-Built drawings shall be kept updated daily and shall be reviewed by the Owner or Owner's Representative during the course of the work. If during the course of the work the record documents are found to be substantially incorrect or substantially behind the progress of the work, the Owner shall have the right to hold progress payments until said documents are brought to an acceptable level of completeness.

11. Accompany submittal of Record Documents with transmittal letter in duplicate containing:
    a. Date
    b. Project title and number
    c. Contractor's name and address
    d. Title and drawing of each number
    e. Signature of contractor or his authorized representative

F. Maintenance Data: To include in maintenance manuals specified in Division 1. Include the following:

1. Operations and Maintenance Manuals: The contractor shall prepare and deliver to the Architect / owner's Representative within ten (10) calendar days prior to completion of construction a minimum of three (3) hard cover binders with three rings containing the following information:
    a. Index sheet stating the contractor's address and business telephone number, 24hr. emergency phone number, person to contact, list of equipment with name(s) and address(es) of local manufacturer's representative(s) and local supplier where replacement equipment can be purchased.
    b. Catalog and parts sheet on every material and equipment installed under this contract including:
        1) Water regulators.
        2) Automatic control valves.
        3) Sprinklers.
        4) Special Equipment
        5) Controllers.

2. Complete operating and maintenance instruction on all major equipment.

3. Provide the owner's maintenance personnel with written and hands on instruction for major equipment and show evidence in writing to the Owner at the conclusion of the project that this service has been rendered.
    a. Instruction on automatic control timer operation and troubleshooting.
    b. Instruction for spray head operation and maintenance.
    c. Instruction for automatic control valve operation and maintenance.

Checklist:

4. Complete the following checklist at the end of each segment of the project, using the format shown below:
    a. Irrigation Permits.
    b. Material approvals.
    c. Pressure line tests - by whom approved and date.
    d. Materials furnished - recipient and date.
    e. Manufacturer's warranties, recipient and date.

f. As-build files
g. Operation / Maintenance Manuals
h. Written guarantee - recipient and date.
i. Adjust sprinkler head height in lawn areas - if not complete, so state and include anticipated completion date.
j. Submit written confirmation of instruction and training of owner's personnel.
k. Package and turn over of extra sprinkler materials.

5. The signed and dated checklist(s) shall be forwarded to the Owner's Representative before final acceptance of the project.

1.6 QUALITY ASSURANCE

A. Product Options: Drawings indicate size, profiles, and dimensional requirements of lawn sprinkler piping components and are based on specific types and models indicated. Other manufacturers' products with equal performance characteristics may be considered. Refer to Division 1 Section "Substitutions."

B. Electrical Components, Devices, and Accessories: Listed and labeled as defined in NFPA 70, Article 100, by a testing agency acceptable to authorities having jurisdiction.

C. Comply with requirements of utility supplying water and authorities having jurisdiction for preventing backflow and back siphonage.

D. Comply with ASTM F 645, "Guide for Selection, Design, and Installation of Thermoplastic Water Pressure Piping Systems."

E. Comply with NFPA 70, "National Electrical Code," for electrical connections between wiring and electrically operated devices.

1.7 DELIVERY, STORAGE, AND HANDLING

A. Preparation for Transport: Prepare valves according to the following:

1. Ensure that valves are dry and internally protected against rust and corrosion.
2. Protect valves against damage to threaded ends and flange faces.
3. Set valves in best position for handling. Set valves closed to prevent rattling.

B. During Storage: Use precautions for valves according to the following:

1. Do not remove end protectors unless necessary for inspection; then, reinstall for storage.
2. Protect from weather. Store indoors and maintain temperature higher than ambient dew-point temperature. Support off ground or pavement in watertight enclosures when outdoor storage is necessary.

C. Deliver piping with factory-applied end caps. Maintain end caps through shipping, storage, and handling to prevent pipe-end damage and to prevent entrance of dirt, debris, and moisture.

D. Protect stored piping from moisture and dirt. Elevate above grade. Do not exceed structural capacity of floor when storing inside.

E. Protect flanges, fittings, and specialties from moisture and dirt.

F. Store plastic piping protected from direct sunlight. Support to prevent sagging and bending.

1.8 PROJECT CONDITIONS

A. Perform site survey, research public utility records, and verify existing utility locations.

B. Investigate and determine available water supply water pressure and flow characteristics.

1.9 SEQUENCING AND SCHEDULING

A. Maintain uninterrupted water service to building during normal working hours. Arrange for temporary water shutoff with Owner.

B. Coordinate lawn sprinkler piping with work specified in Division 2 Sections "Lawn and Grasses" and "Exterior Plants."

C. Coordinate lawn sprinkler piping with utility work.

PART 2 - PRODUCTS

2.1 MATERIALS:

A. The Contractor shall supply material and equipment. No substitutions shall be allowed without the prior written approval of the Owner's Representative. The Contractor shall inspect all materials and equipment prior to installation; any defective materials and equipment shall be replaced with the proper materials and equipment. Those items used in the installation found to be defective, improperly installed or not as specified shall be removed and the proper materials and equipment installed in the proper manner, as interpreted by the Owner's Representative.

2.2 PIPE:

A. Pipe shall be delivered to the site in full 20' lengths and clearly marked with the manufacturers name and classification.

1. Main: Pipe situated hydraulically between the water source and the sprinkler control valves is classified as Main Line Pipe. All main line pipe is herein specified to be Sch. 40 Polyvinyl Chloride (PVC) solvent weld type pipe. Pipe shall be equipped with factory-attached couplings or integral formed bells for solvent weld connections.

2. Lateral: Pipe situated hydraulically on the discharge side of the sprinkler control valves is classified as Lateral Line Pipe and is herein specified to be Polyvinyl Chloride (PVC) Schedule 40. Pipe shall be equipped with factory-attached couplings or integral formed bells for solvent weld connection.

2.3 FITTINGS:

A. Main Line and Lateral line pipe fittings shall be of the proper type and class for use with the above-specified pipe, and shall have either solvent weld or IPS threaded connections according to the requirements of the connection being made.

B. Fittings for PVC Pipe: Shall be Schedule 40 PVC with solvent weld joints and conform to the requirements of ASTM Designation D2467 and D2464 respectively and furnished by the manufacturer of pipe.

C. Fittings for Gasketed Pipe: For gasket pipe, fittings shall be Schedule 40 rubber ring fittings with sealed bell spigot, O-ring, ring-tite mechanical joint, flanged or IPS threaded. All gasketed pipe shall be thrust blocked.

D. Both the Fittings and the Solvent Cement and Cleaner used in their installation shall be either manufactured or supplied by the manufacturer of the pipe on which they are to be used. Both the pipe manufacturer and the contractor shall guarantee the pipe, fittings, and cement and cleaner utilized in this work are all compatible with one another and are proper and suitable for and in this work as lateral line piping.

E. Lateral line Pipe fittings shall be of the proper type and class for use with the above-specified pipe, and shall have either solvent weld or IPS threaded connections according to the requirements of the connection being made. Both the fittings and the solvent cement and cleaner used in their installations shall be either manufactured or supplied by the manufacturer of the pipe on which they are to be used. Both the pipe manufacturer and the contractor shall guarantee the pipe, fittings, cement, and cleaner utilized in this work are all compatible with one another and are proper and suitable for and in this work as lateral line piping.

2.4 THREADED PIPE:

A. Threaded Pipe: Connections between main pipe and sprinkler control valve shall be made using threaded pipe and fittings. Galvanized schedule 40 or PVC schedules 80-threaded pipe and fittings are herein specified for this use.

2.5 SLEEVES:

A. Sleeves: The location of sleeves shown on the plans is schematic. The irrigation contractor shall make any adjustments necessary to accommodate existing vegetation, utilities, or other conditions. Sleeving shall be class 150 Schedule 40 PVC pipe.

2.6 BALL VALVES:

A. Ball Valves: Ball valves three inches (3”) and smaller shall be PVC Schedule 40 rated at 150 psi at 73 degrees F., ¼ turn action (Nibco or equal)

2.7 SPRINKLER HEADS:

A. Rotary Pop-up Sprinklers: The sprinkler shall be of the gear driven type capable of covering 35-55 feet radius at 40-60 p.s.i. with a discharge rate of 3.0 - 6.0 G.P.M. The sprinkler shall be available in full and part circle patterns. The part circle sprinkler arc shall be adjustable in 1-degree increments from 45 degrees to 315 degrees. Rotation shall be accomplished by sealed oil packed gear assembly isolated from the water supply. The sprinkler will have built-in check valve that checks up to 10' of elevation change.

1. The nozzle shall pop-up a minimum of 4" when watering and have a heavy-duty stainless steel spring for retraction. Nozzles shall be sealed in the down position to prevent entry of foreign material. Part circle nozzles shall be adjusted down to a 30' radius accessible from the top of the sprinkler.

2. The sprinkler shall be removable through the top of the sprinkler case. Maximum working pressure at the base of the sprinkler shall be 75 p.s.i.

3. Sprinkler heads located in high traffic areas are to be installed in pre-cast concrete collars. Large collars for rotor heads, small collars for sprays.

B. Spray Sprinklers:

1. The sprinkler shall be fixed spray type designed for in-ground installation. The nozzle shall elevate 6" to 12" (as designated on plans) when in operation. A filter screen shall be in the nozzle piston. All sprinkler parts shall be removable through the top of the unit by removal of a threaded cap.

2. Low volume drip irrigation to be Rainbird Landscape Dripline and is to be installed as indicated on detail drawings.

3. Rainbird 1400 series tree bubblers to be installed ar detail drawings

2.8 CONTROL VALVES:

A. Automatic Control Valves: The automatic remote control valves shall be 200B series 1", 1-1/2" or 2" electric globe/angle models as manufactured under the brand name of Irritrol Systems or approved equal.

B. Construction: Valve body shall be constructed of corrosion and UV-resistant PVC material with all stainless steel hardware and spring. Valve shall have internal and external bleed for manual operation and flushing. Valve shall have a high-strength, ribbed bonnet and bottom inlet. Valve shall have a heavy-duty double-beaded diaphragm. Valve shall have a Buna-N valve seat seal. Valve shall be easily serviced without needing to be removed from the system. Valve shall be powered by a 24 V ac solenoid with a captive plunger, .4 amp inrush, and .2 amp holding.

C. Operation: Valve shall have a working pressure range from 20 psi minimum to 150 psi maxium. Valve shall have a recommended flow range from 5 to 120 gpm depending on valve size.

2.9 ACCESS BOXES:

A. CONTROL VALVE BOXES:

1. Valve access boxes for sprinkler automatic control valves & gate valves shall be Carson, #910 series.

2. Valve access boxes for drip filter and pressure regulator assemblies shall be Carson, #1220 series.

B. SPLICE BOXES:

1. Wire splices not made at sprinkler control valve boxes shall be placed in 10” dia. valve box and lid (Carson #910 series).

2.10 WIRE:

A. Power Supply Wire:
1. Exterior Mounted Controllers: The 115 volt service to field controllers shall be two wire with ground solid copper wire, Underwriters Laboratories Inc. approved for direct burial in the ground. Size of wire shall be #14/2 UF ground.

a. Wire shall be furnished in minimum 2,500-ft. reels and spliced only at satellite locations or the location for service. Splices shall be sealed with a waterproof connector.

2. Building Mounted Controllers: Supply controller from building using Conduit to meet building’s typical wiring requirements, but not less than 1-1/4” PVC (Schedule 40).

B. Control Signal Wire: Wiring used for connecting the automatic remote control valves to the automatic control timers shall be type UF, 600 volt, single strand, solid copper with PVC insulation 4/64 inch think. Size shall be l4 gauge, red for “hot” or lead wires, and common wire to be l4 gauge, white in color.

1. All splices in control wire shall be made at valve locations or marked with valve access box and made with waterproof connectors.

2.11 AUTOMATIC CONTROL SYSTEM:

A. General: Furnish low voltage system manufactured expressly for control of automatic circuit valves of underground sprinkler systems. Provide unit of capacity to suit number of circuits as indicated. Motorola Scorpio-V2 system to be installed to interface with City of Tampa central control system.

1. Primary Input Power: AC: 120/240 VAC, 50/60 Hz @ 30VA

2. Primary Output Power: Basic unit 8 outputs, expanded unit 16 outputs – AC: 24 VAC, 50/60 Hz, 0.8 Amps (19VA) per output. Total maximum load @ 24VAC, 1.2 Amps

3. Sensor Inputs: Basic unit 2 inputs, expanded unit 4 inputs; Type: digital (dry contact), open contact detected greater than 100K Ohms, closed contact detected less than 3K Ohms.

4. Mechanical: Polycarbonate Lexan BE2139 plastic housing, RJ-11 connector for keyboard/terminal connection, RJ connector for shared radio wire link, Radio unit, antenna connection – Heliflex antenna and RF microphone jack adapter to FM BNC for external antenna

5. Control Equipment: Shall be equipped with lightning protection and grounded per local electric codes. Must pass the earth resistance test for 10 Ohms or less.

B. RAIN SENSOR SWITCH: Shall automatically switch off control system when sufficient rain is sensed. Amount of rain required to trip switch shall be adjustable. Location of switch mounting location to be approved, on site, by architect.

2.12 WATER PROOF CONNECTORS:

A. Waterproof connectors shall be a combination of PVC plastic connector and a sealer that provides a completely water proof connection when assembled.

2.13 FLEXIBLE CONNECTIONS:

A. Risers from pipe to irrigation heads shall be K-flex tubing attached per manufacturer's instructions and designed to operate at the pressure achieved in the system. Submit product for Architect's approval.

PART 3 - EXECUTION

3.1 INSTALLATION:

A. The Contractor shall install the irrigation system to provide a fully operational automatic system. The Contractor shall install all materials specified and implied by the drawings and specifications.

3.2 EXCAVATION:

A. Trenching and Backfilling: The Contractor will stake out the locations of each run of pipe, sprinkler heads, sprinkler valves and isolation valves prior to trenching. Excavation shall be open vertical construction sufficiently wide to provide free working space around the work installed and to provide ample space for backfilling and tamping. Trenches for pipe shall be cut to required grade lines and compacted to provide accurate grade and uniform bearing for the

full length of the line. The bottom of trenches shall be free of rock or other sharp edged objects. Minimum cover shall be 24” for pressure lines and l2” for non-pressure lines. All pipelines shall have a 6” minimum clearance from each other and from lines of other crafts. Backfill shall be compacted to dry density equal to adjacent undisturbed soils, and shall conform to adjacent grades without dips, sunken areas, lumps or other irregularities.

1. Initial backfill on PVC lines shall be pulverized native soil, free of foreign matter. Within radius of 4” of the pipe shall be clean soil or sand.

2. Plant locations shall take precedence over sprinkler and pipe locations. The contractor shall coordinate the routing of lines and final head location with existing and proposed tree locations.

B. Rock Clause: Should the ground be such that large rocks, debris, buried garbage, building materials or other obstructions cannot be dug through with a trencher, the Architect should be immediately notified and a cost for excavation and backfill with selected materials shall be negotiated.

3.3 MAIN LINE AND LATERAL PIPE:

A. Mainline and Lateral Pipe shall be a solvent weld joint. Pipe shall be installed inn a manner so as to provide for expansion and contraction as recommended by the manufacturer.

1. PVC pipe shall be cut with a hand saw or hack saw with the assistance of a square in sawing vice, or in a manner so as to ensure a square cut. Burrs at cut ends shall be removed prior to installation so that a smooth unobstructed flow will be obtained.

2. Only the solvent recommended by the pipe manufacturer shall be used. All PVC pipe and fittings shall be installed as outlined and instructed by the pipe manufacturer, and it shall be the Contractor’s full responsibility to make arrangements with the pipe manufacturer for any field assistance that may be necessary. The contractor shall assume full responsibility for the correct installation.

3. All PVC to Metal joints shall be made with PVC male adaptors. The solvent weld joints shall be made in the following manner:

   a. Thoroughly clean the mating pipe and fitting with a clean dry cloth.
   b. Apply a uniform coat of solvent to the outside of the pipe with an approved applicator.
   c. Apply solvent to the fitting in a similar manner.
   d. Re-apply a light coat of solvent to the pipe and quickly insert it into the fitting.
   e. Give the pipe or fitting a quarter turn to insure even distribution of solvent and make sure the pipe is inserted to the full depth of the fitting socket.
   f. Hold in position for 15 seconds.
   g. Wipe off excess solvent that appears at the outer shoulder of the fitting.
   h. Care should be taken not to use an excess amount of solvent, thereby causing an obstruction to form on the inside of the pipe.
   i. The PVC joints shall be allowed to set at least 24 hours before pressure is applied to the system.

3.4 SPRINKLER HEADS:

A. Pop-up rotary sprinkler heads shall be set flush with finish grade. Heads installed at roadway curb or edge of walk shall have 6” to 10” between perimeter of head and curb. Heads placed at edge of pavement having no curb shall be installed 18” from edge of pavement. Pop-up rotors shall be connected to rigid PVC with an approved flexible swing joints connection.

B. Spray pop-up sprinkler heads shall be installed flush with finish grade and connected to rigid PVC with an approved flexible connection. Sprinkler heads placed adjacent to walks and curbs will be installed 6” from the edge. Sprinkler heads placed adjacent to pavement having no curb shall be installed 18” from edge of pavement.

C. Shrub bed sprinkler heads with flat spray or bubbler nozzles shall be installed with the top of the head no more than 6” above grade. Pop-up extensions may be used to clear the top of plant material or water may be directed into the lower branches of the plants with stream bubbler nozzles. No rigid risers shall be acceptable. Connection between the rigid PVC and the sprinkler head shall be made with an approved flexible swing joints connection.

3.5 CONTROL VALVES:

A. Automatic Remote Control Valves shall be installed in specified valve boxes. The valve shall have 6” of pea gravel installed below the bottom of the valve. The valve shall be connected to the main line using three threaded nipples and two 45-degree elbows. If valve box does not extend to base of valve a valve box extension, supplied by the same manufacturer, shall be installed. If a filter is installed at a control valve a larger box shall be used to hold both pieces of equipment adequately.

B. Electrical connections to remote control valves shall be made with waterproof connectors. Slack shall be provided in control wire so that the connection will extend 2’ above grade.

3.6 BACKFLOW PREVENTER:

A. Backflow Preventer:
   1. Provide union on downstream side. Install approved backflow preventer to conform to local codes and ordinances. See pertinent plumbing section in Division 2 for coordination of this work.

3.7 POWER CONNECTORS:

A. Exterior Electrical connections to power and signal wires shall be made using water proof connectors.

B. Interior Power wire shall be installed in conduit to the controller and in compliance with all applicable codes.

C. Signal Wire installed by the contractor shall be installed with the main pipeline. The wire shall be color-coded, bundled and taped every ten feet. The wire shall be laid in the trench prior to installing the pipe being careful to install wire beneath and 6” to the side of the main pipeline.

3.8 RAIN SENSOR SWITCH (Installed in Phase One work)

3.9 CUT AND PATCH ROADWAYS: All cutting and patching shall be approved by the Owner before proceeding with work.

A. Directional boring will be required in areas as designated on drawings.

B. Work included under this section consists of cutting, removing, protecting and replacing existing pavements

C. Where existing pavement is to be removed, the surfacing shall be mechanical saw cut prior to trench excavation, leaving a uniform and straight edge, with minimum disturbance to the remaining adjacent surfacing. The width of cut shall be minimal.

3.10 FIELD QUALITY CONTROL

A. Testing: Hydrostatically test piping and valves before backfilling trenches. Piping may be tested in sections.

1. At any time during the installation of the irrigation system by the contractor the Owner or Architect will visit the site to make official inspections. Upon request, the Contractor will be required to uncover specified work as directed by the inspector without compensation. Should the material, workmanship or method of installation not meet the standards specified herein the contractor shall replace the work at his own expense.

2. Pipe Line Testing: Prior to backfilling of mainline fittings, contractor shall fill the Main Line piping with water, in the presence of the Architect, taking care to purge the air from it by operating all the sprinkler control valves one or more times and or such other means as may be necessary. A small, high-pressure pump or other means of maintaining a continuous water supply shall be connected to the Main Line and set so as to maintain 125 p.s.i. in the Main Line system for two (2) hours without interruption. When this has been accomplished and while the pressure in the system is still 125 p.s.i., leakage testing shall be performed in accordance with AWWA Standard C-600. Pressure readings shall be noted and make up water usage shall be recorded. Should the rate of make-up water usage indicate significant leakage, the source of such leakage shall be found and corrected and the system then re-tested until the Architect is satisfied that the system is reasonably sound. Lateral line testing shall be conducted during the operating testing of the system by checking visually the ground surface until no leaks in this portion of the system are evident. Leaks shall be repaired or paid for by the Contractor at any time they appear during the warranty period.

B. Inspection and Acceptance: The Architect will respond within ten (10) days after the notification by Contractor of completion for the purpose of making a final inspection of the system, and if final acceptance is not given, a “punch list” will be prepared which, upon completion by the Contractor, will signify final acceptance by the Owner or his authorized representative.

3.11 CLEANING AND ADJUSTING

A. Balancing and Adjustment: The Contractor shall balance and adjust the various components of the system so the overall operation of the system is most efficient. This includes a

synchronization of the controllers, adjustments to pressure regulators, pressure relief valves, part circle sprinkler heads and individual station adjustments on the controllers

1. Flush dirt and debris from piping before installing sprinklers and other devices.
2. Adjust automatic control valves to provide flow rate of rated operating pressure required for each sprinkler circuit.
3. Carefully adjust lawn sprinklers so they will be flush with, or not more than 1/2 inch (13 mm) above, finish grade.
4. Adjust settings of controllers and automatic control valves.

3.12 COMMISSIONING

A. Starting Procedures: Follow manufacturer's written procedures. If no procedures are prescribed by manufacturers, proceed as follows:

1. Verify that specialty valves and their accessories are installed and operate correctly.
2. Verify that specified tests of piping are complete.
3. Verify that sprinklers and devices are correct type.
4. Verify that damaged sprinklers and devices are replaced with new materials.
5. Verify that potable-water supply connections have backflow preventers.
6. Energize circuits to electrical equipment and devices.
7. Adjust operating controls.

B. Operational Tests: Measure and record water flow rate and area coverage at each sprinkler. Adjust to achieve indicated values.

3.13 DEMONSTRATION

A. Demonstrate to Owner's maintenance personnel operation of equipment, sprinklers, specialties, and accessories. Review maintenance information.

B. Provide seven days' advance written notice of demonstration.

END OF SECTION

SECTION 02920 – LAWNS AND GRASSES

PART 1 - GENERAL

1.1 RELATED DOCUMENTS

A. Drawings and general provisions of the Contract, including General and Supplementary Conditions and Division 1 Specification Sections, apply to this Section.

1.2 SUMMARY

A. This Section includes the following:
   1. Seeding.
   2. Sodding.
   3. Lawn renovation.

1.3 DEFINITIONS

A. Finish Grade: Elevation of finished surface of planting soil.

B. Manufactured Soil: Soil produced off-site by homogeneously blending mineral soils or sand with stabilized organic soil amendments to produce topsoil or planting soil.

C. Planting Soil: Native or imported topsoil, manufactured topsoil, or surface soil modified to become topsoil; mixed with soil amendments.

D. Subgrade: Surface or elevation of subsoil remaining after completing excavation, or top surface of a fill or backfill immediately beneath planting soil.

1.4 SUBMITTALS

A. Product Data: For each type of product indicated.

B. Certification of Grass Seed: From seed vendor for each grass-seed monostand or mixture stating the botanical and common name and percentage by weight of each species and variety, and percentage of purity, germination, and weed seed. Include the year of production and date of packaging.

C. Product Certificates: For soil amendments and fertilizers, labels of products used with manufacturer recommended application methods.

D. Qualification Data: For Sod and/or Seeding Contractor.

E. Material Test Reports: For existing surface soil and imported topsoil with laboratory recommendations for amendments for lawns being installed.

F. Planting Schedule: Indicating anticipated planting dates for each type of planting.

G. Maintenance Instructions: Recommended procedures to be established by Owner for maintenance of lawns during a calendar year. Submit before expiration of required maintenance periods.

1.5 QUALITY ASSURANCE

A. Installer Qualifications: A qualified landscape installer whose work has resulted in successful lawn establishment.
   1. Installer's Field Supervision: Require Installer to maintain an experienced full-time supervisor on Project site when planting is in progress.

B. Soil-Testing Laboratory Qualifications: An independent laboratory, recognized by the State Department of Agriculture, with the experience and capability to conduct the testing indicated and that specializes in types of tests to be performed.

C. Topsoil Analysis: Furnish soil analysis by a qualified soil-testing laboratory stating percentages of organic matter; gradation of sand, silt, and clay content; cation exchange capacity; sodium absorption ratio; deleterious material; pH; and mineral and plant-nutrient content of topsoil.
   1. Report suitability of topsoil for lawn growth. State recommended quantities of nitrogen, phosphorus, and potash nutrients and soil amendments to be added to produce satisfactory topsoil.

D. Pre-installation Conference: Conduct conference at Project site with owner’s representative and Installing Contractor to become familiar with operational requirements.

1.6 DELIVERY, STORAGE, AND HANDLING

A. Seed: Deliver seed in original sealed, labeled, and undamaged containers.

B. Sod: Harvest, deliver, store, and handle sod according to requirements in TPI's "Specifications for Turfgrass Sod Materials" and "Specifications for Turfgrass Sod Transplanting and Installation" in its "Guideline Specifications to Turfgrass Sodding."

1.7 SCHEDULING

A. Planting Restrictions: Plant during one of the following periods. Coordinate planting periods with maintenance periods to provide required maintenance from date of Substantial Completion.
   1. Wet Season Planting: Install whenever rains allow, protect slopes against erosion as necessary.
   2. Dry Season Planting: Install after irrigation system is in place and tested. Set irrigation controller for maximum watering frequency allowed by local and state water restrictions. Supplement irrigation system with truck watering to assure success of planting until irrigation watering schedule is adequate for turf.

B. Weather Limitations: Proceed with planting only when existing and forecasted weather conditions permit.

1.8 LAWN MAINTENANCE

A. Begin maintenance immediately after each area is planted and continue until acceptable lawn is established, but for not less than the following periods:
   1. Seeded Lawns: 60 days from date of Final Inspection.
      a. When full maintenance period has not elapsed before end of planting season, or if lawn is not fully established, continue maintenance during next planting season.
   2. Sodded Lawns: 60 days from date of Final Inspection.
   3.

B. Maintain and establish lawn by watering, fertilizing, weeding, mowing, trimming, replanting, and other operations. Roll, re-grade, and replant bare or eroded areas and re-mulch to produce a uniformly smooth lawn.
   1. In areas where mulch has been disturbed by wind or maintenance operations, add new mulch. Anchor as required to prevent displacement.

C. Watering: Provide and maintain temporary piping, hoses, and lawn-watering equipment to convey water from sources and to keep lawn uniformly moist to a depth of 6 inches.
   1. Schedule watering to prevent wilting, puddling, erosion, and displacement of seed or mulch. Lay out temporary watering system to avoid walking over muddy or newly planted areas.
   2. Water lawn at a minimum rate of 1 inch per week.

D. Mow lawn as soon as top growth is tall enough to cut. Repeat mowing to maintain specified height without cutting more than 40 percent of grass height. Remove no more than 40 percent of grass-leaf growth in initial or subsequent mowings. Do not delay mowing until grass blades bend over and become matted. Do not mow when grass is wet. Schedule initial and subsequent mowings to maintain the following grass height:
   1. Mow grass 2 to 3 inches high.

E. Lawn Post-fertilization: Apply fertilizer after initial mowing and when grass is dry.
   1. Use fertilizer that will provide actual nitrogen of at least 1 lb/1000 sq. ft. to lawn area.

PART 2 - PRODUCTS

2.1 SEED

A. Grass Seed: Fresh, clean, dry, new-crop seed complying with AOSA's "Journal of Seed Technology; Rules for Testing Seeds" for purity and germination tolerances.

B. Seed Species: State-certified seed of grass species, as follows:

C. Seed Species: Seed of grass species as follows, with not less than 95 percent germination, not less than 85 percent pure seed, and not more than 0.5 percent weed seed:

D.
   a. Argentine Bahia (Paspalum notatum)

2.2 TURFGRASS SOD

A. Turfgrass Sod: Certified Number 1 Quality, complying with TPI's "Specifications for Turfgrass Sod Materials" in its "Guideline Specifications to Turfgrass Sodding." Furnish viable sod of uniform density, color, and texture, strongly rooted, and capable of vigorous growth and development when planted.

B. Turfgrass Species: St. Augustine ‘Floritam’ grass (Stenotaphrum secundatum ‘Floritam”) and Argentine Bahia (Paspalum notatum) as noted on plan.

2.3 TOPSOIL

A. Topsoil: ASTM D 5268, pH range of 5.5 to 7, a minimum of 2 percent organic material content; free of stones 1 inch or larger in any dimension and other extraneous materials harmful to plant growth.
   1. Topsoil Source: Reuse surface soil stockpiled on-site. Verify suitability of stockpiled surface soil to produce topsoil. Clean surface soil of roots, plants, sod, stones, clay lumps, and other extraneous materials harmful to plant growth.
      a. Supplement with imported or manufactured topsoil from off-site sources when quantities are insufficient. Obtain topsoil displaced from naturally well-drained construction or mining sites where topsoil occurs at least 4 inches deep; do not obtain from agricultural land, bogs or marshes.

2.4 INORGANIC SOIL AMENDMENTS

A. Lime: ASTM C 602, agricultural limestone containing a minimum 80 percent calcium carbonate equivalent and as follows:
   1. Class: Class T, with a minimum 99 percent passing through No. 8 sieve and a minimum 75 percent passing through No. 60 sieve.
   2. Provide lime in form of dolomitic limestone.

B. Sulfur: Granular, biodegradable, containing a minimum of 90 percent sulfur, with a minimum 99 percent passing through No. 6 sieve and a maximum 10 percent passing through No. 40 sieve.

C. Iron Sulfate: Granulated ferrous sulfate containing a minimum of 20 percent iron and 10 percent sulfur.

D. Aluminum Sulfate: Commercial grade, unadulterated.

E. Perlite: Horticultural perlite, soil amendment grade.

F. Agricultural Gypsum: Finely ground, containing a minimum of 90 percent calcium sulfate.

G. Sand: Clean, washed, natural or manufactured, free of toxic materials.

H. Diatomaceous Earth: Calcined, diatomaceous earth, 90 percent silica, with approximately 140 percent water absorption capacity by weight.

I. Zeolites: Mineral clinoptilolite with at least 60 percent water absorption by weight.

2.5 ORGANIC SOIL AMENDMENTS

A. Compost: Well-composted, stable, and weed-free organic matter, pH range of 5.5 to 8; moisture content 35 to 55 percent by weight; 100 percent passing through 1-inch sieve; soluble salt content of 5 to 10 decisiemens/m; not exceeding 0.5 percent inert contaminants and free of substances toxic to plantings; and as follows:
   1. Organic Matter Content: **60**] percent of dry weight.
   2. Feedstock: Agricultural, food, or industrial residuals; biosolids; yard trimmings; or source-separated or compostable mixed solid waste.

B. Sphagnum Peat: Sphagnum peat moss, partially decomposed, finely divided or granular texture, with a pH range of 3.4 to 4.8.

C. Peat: Finely divided or granular texture, with a pH range of 6 to 7.5, containing partially decomposed moss peat, native peat, or reed-sedge peat and having a water-absorbing capacity of 1100 to 2000 percent.

D. Wood Derivatives: Decomposed, nitrogen-treated sawdust, ground bark, or wood waste; of uniform texture, free of chips, stones, sticks, soil, or toxic materials.
   1. In lieu of decomposed wood derivatives, mix partially decomposed wood derivatives with at least 0.15 lb of ammonium nitrate or 0.25 lb of ammonium sulfate per cubic foot of loose sawdust or ground bark.

E. Manure: Well-rotted, unleached, stable or cattle manure containing not more than 25 percent by volume of straw, sawdust, or other bedding materials; free of toxic substances, stones, sticks, soil, weed seed, and material harmful to plant growth.

2.6 PLANTING ACCESSORIES

A. Selective Herbicides: EPA registered and approved, of type recommended by manufacturer for application.

2.7 FERTILIZER

A. Bonemeal: Commercial, raw or steamed, finely ground; a minimum of 4 percent nitrogen and 20 percent phosphoric acid.

B. Superphosphate: Commercial, phosphate mixture, soluble; a minimum of 20 percent available phosphoric acid.

C. Commercial Fertilizer: Commercial-grade complete fertilizer of neutral character, consisting of fast- and slow-release nitrogen, 50 percent derived from natural organic sources of urea formaldehyde, phosphorous, and potassium in the following composition:
   1. Composition: Nitrogen, phosphorous, and potassium in amounts recommended in soil reports from a qualified soil-testing agency.

D. Slow-Release Fertilizer: Granular or pelleted fertilizer consisting of 50 percent water-insoluble nitrogen, phosphorus, and potassium in the following composition:
   1. Composition: Nitrogen, phosphorous, and potassium in amounts recommended in soil reports from a qualified soil-testing agency.

2.8 MULCHES

A. Straw Mulch: Provide air-dry, clean, mildew- and seed-free, salt hay or threshed straw of wheat, rye, oats, or barley.

B. Fiber Mulch: Biodegradable, dyed-wood, cellulose-fiber mulch; nontoxic; free of plant-growth or germination inhibitors; with maximum moisture content of 15 percent and a pH range of 4.5 to 6.5.

C. Nonasphaltic Tackifier: Colloidal tackifier recommended by fiber-mulch manufacturer for slurry application; nontoxic and free of plant-growth or germination inhibitors.

D. Asphalt Emulsion: ASTM D 977, Grade SS-1; nontoxic and free of plant-growth or germination inhibitors.

2.9 EROSION-CONTROL MATERIALS

A. Erosion-Control Blankets: Biodegradable wood excelsior, straw, or coconut-fiber mat enclosed in a photodegradable plastic mesh. Include manufacturer's recommended steel wire staples, 6 inches long.

B. Erosion-Control Fiber Mesh: Biodegradable twisted jute or spun-coir mesh, a minimum of 0.92 lb/sq. yd., with 50 to 65 percent open area. Include manufacturer's recommended steel wire staples, 6 inches long.

PART 3 - EXECUTION

3.1 EXAMINATION

A. Examine areas to receive lawns and grass for compliance with planting specification requirements and other conditions affecting lawn performance. Proceed with installation only after unsatisfactory conditions have been corrected.

3.2 PREPARATION

A. Protect structures, utilities, sidewalks, pavements, and other facilities, trees, shrubs, and plantings from damage caused by planting operations.
   1. Protect adjacent and adjoining areas from hydroseeding overspray.

B. Provide erosion-control measures to prevent erosion or displacement of soils and discharge of soil-bearing water runoff or airborne dust to adjacent properties and walkways.

3.3 LAWN PREPARATION

A. Limit lawn subgrade preparation to areas to be planted.

B. Newly Graded Subgrades: Loosen subgrade to a minimum depth of 4 inches. Remove stones larger than 1 inch in any dimension and sticks, roots, rubbish, and other extraneous matter and legally dispose of them off Owner's property.

C. Unchanged Subgrades: If lawns are to be planted in areas unaltered or undisturbed by excavating, grading, or surface soil stripping operations, prepare surface soil as follows:
   1. Remove existing grass, vegetation, and turf. Do not mix into surface soil.
   2. Loosen surface soil to a depth of at least of 4 inches. Apply soil amendments and fertilizers according to soil test results and mix thoroughly into top 4 inches of soil. Till soil to a homogeneous mixture of fine texture.
   3. Remove stones larger than 1 inch in any dimension and sticks, roots, trash, and other extraneous matter.
   4. Legally dispose of waste material, including grass, vegetation, and turf, off Owner's property.

D. Finish Grading: Grade planting areas to a smooth, uniform surface plane with loose, uniformly fine texture. Grade to within plus or minus 1/2 inch of finish elevation. Roll and rake, remove ridges,

and fill depressions to meet finish grades. Limit fine grading to areas that can be planted in the immediate future.

E. Moisten prepared lawn areas before planting if soil is dry. Water thoroughly and allow surface to dry before planting. Do not create muddy soil.

F. Restore areas if eroded or otherwise disturbed after finish grading and before planting.

3.4 SEEDING

A. Sow seed with spreader or seeding machine. Do not broadcast or drop seed when wind velocity exceeds 5 mph. Evenly distribute seed by sowing equal quantities in two directions at right angles to each other.
   1. Do not use wet seed or seed that is moldy or otherwise damaged.

B. Sow seed at the rate of 5 to 8 lb/1000 sq. ft..

C. Rake seed lightly into top 1/8 inch of topsoil, roll lightly, and water with fine spray.

D. Protect seeded areas with slopes exceeding 1:6 with erosion-control fiber mesh and 1:4 with erosion-control blankets installed and stapled according to manufacturer's written instructions

3.5 HYDROSEEDING

A. Hydroseeding: Mix specified seed, fertilizer, and fiber mulch in water, using equipment specifically designed for hydroseed application. Continue mixing until uniformly blended into homogeneous slurry suitable for hydraulic application.
   1. Mix slurry with nonasphaltic tackifier.
   2. Apply slurry uniformly to all areas to be seeded in a one-step process. Apply mulch at a minimum rate of 1500-lb/acre dry weight but not less than the rate required to obtain specified seed-sowing rate.

3.6 SODDING

A. Lay sod within 24 hours of harvesting. Do not lay sod if dormant or if ground is frozen or muddy.

B. Lay sod to form a solid mass with tightly fitted joints. Butt ends and sides of sod; do not stretch or overlap. Stagger sod strips or pads to offset joints in adjacent courses. Avoid damage to subgrade or sod during installation. Tamp and roll lightly to ensure contact with subgrade, eliminate air pockets, and form a smooth surface. Work sifted soil or fine sand into minor cracks between pieces of sod; remove excess to avoid smothering sod and adjacent grass.
   1. Lay sod across angle of slopes exceeding 1:3.
   2. Anchor sod on slopes exceeding 1:6 with wood pegs spaced as recommended by sod manufacturer but not less than 2 anchors per sod strip to prevent slippage.

C. Saturate sod with fine water spray within two hours of planting. During first week, water daily or more frequently as necessary to maintain moist soil to a minimum depth of 1-1/2 inches below sod.

3.7 LAWN RENOVATION

A. Renovate existing lawn.

B. Renovate existing lawn damaged by Contractor's operations, such as storage of materials or equipment and movement of vehicles.
   1. Reestablish lawn where settlement or washouts occur or where minor regrading is required.

C. Remove sod and vegetation from diseased or unsatisfactory lawn areas; do not bury in soil.

D. Remove topsoil containing foreign materials resulting from Contractor's operations, including oil drippings, fuel spills, stone, gravel, and other construction materials, and replace with new topsoil.

E. Mow, de-thatch, core aerate, and rake existing lawn.

F. Remove weeds before seeding. Where weeds are extensive, apply selective herbicides as required. Do not use pre-emergence herbicides.

G. Remove waste and foreign materials, including weeds, soil cores, grass, vegetation, and turf, and legally dispose of them off Owner's property.

H. Till stripped, bare, and compacted areas thoroughly to a soil depth of 4 inches.

I. Apply soil amendments and initial fertilizers required for establishing new lawns and mix thoroughly into top 4 inches of existing soil. Provide new planting soil to fill low spots and meet finish grades.

J. Apply sod as required for new lawns.

K. Water newly planted areas and keep moist until new lawn is established.

3.8 SATISFACTORY LAWNS

A. Satisfactory Seeded Lawn: At end of maintenance period, a healthy, uniform, close stand of grass has been established, free of weeds and surface irregularities, with coverage exceeding 90 percent over any 10 sq. ft. (0.92 sq. m) and bare spots not exceeding 5 by 5 inches.

B. Satisfactory Sodded Lawn: At end of maintenance period, a healthy, well-rooted, even-colored, viable lawn has been established, free of weeds, open joints, bare areas, and surface irregularities.

C. Reestablish lawns that do not comply with requirements and continue maintenance until lawns are satisfactory and are accepted by the owner.

3.9 CLEANUP AND PROTECTION

A. Promptly remove soil and debris created by lawn work from paved areas. Clean wheels of vehicles before leaving site to avoid tracking soil onto roads, walks, or other paved areas.

B. Erect barricades and warning signs as required to protect newly planted areas from traffic. Maintain barricades throughout maintenance period and remove after lawn is established.

C. Remove erosion-control measures after grass establishment period and/or when a satisfactory lawn is accepted by the owner.

END OF SECTION

SECTION 02930 - EXTERIOR PLANTS

PART 1 - GENERAL

1.1 RELATED DOCUMENTS

A. Drawings and general provisions of the Contract, including General and Supplementary Conditions and Division 1 Specification Sections, apply to this Section.

1.2 SUMMARY

A. This Section includes the following:
   1. Trees.
   2. Shrubs.
   3. Ground cover.

1.3 DEFINITIONS

A. Balled and Burlapped Stock: Exterior plants dug with firm, natural balls of earth in which they are grown, with ball size not less than diameter and depth recommended by ANSI Z60.1, the “American Standard for Nursery Stock”, or “Grades and Standards for Nursery Plants”, Florida Department of Agriculture, (which ever is greater) for type and size of tree or shrub required; wrapped, tied, rigidly supported, and drum-laced as recommended by ANSI Z60.1.

B. Bare-Root Stock: Exterior plants with a well-branched, fibrous-root system developed by transplanting or root pruning, with soil or growing medium removed, and with not less than minimum root spread according to ANSI Z60.1 the “American Standard for Nursery Stock”, or “Grades and Standards for Nursery Plants”, Florida Department of Agriculture, (which ever is greater) for type and size of tree, shrub or ground cover required.

C. Container-Grown Stock: Healthy, vigorous, well-rooted exterior plants grown in a container with well-established root system reaching sides of container and maintaining a firm ball when removed from container. Container shall be rigid enough to hold ball shape and protect root mass during shipping and be sized according to ANSI Z60.1 the “American Standard for Nursery Stock”, or “Grades and Standards for Nursery Plants”, Florida Department of Agriculture, (which ever is greater) for type and size of tree or shrub required; wrapped, tied, rigidly supported, and drum-laced as recommended by ANSI Z60.1.kind, type, and size of exterior plant required.

D. Finish Grade: Elevation of finished surface of planting soil.

E. Manufactured Topsoil: Soil produced off-site by homogeneously blending mineral soils or sand with stabilized organic soil amendments to produce topsoil or planting soil.

F. Planting Soil: Native or imported topsoil, manufactured topsoil, or surface soil modified to become topsoil; mixed with soil amendments.

G. Subgrade: Surface or elevation of subsoil remaining after completing excavation, or top surface of a fill or backfill, before placing planting soil.

1.4 SUBMITTALS

A. Product Data: For each type of product indicated.

B. Product Certificates: For each type of manufactured product, signed by product manufacturer, and complying with the following:
   1. Manufacturer's certified analysis for standard products.
   2. Analysis of other materials by a recognized laboratory made according to methods established by the Association of Official Analytical Chemists, where applicable.

C. Material Test Reports: For existing surface soil and imported topsoil.

D. Planting Schedule: Indicating anticipated planting dates for exterior plants.

E. Maintenance Instructions: Recommended procedures to be established by Owner for maintenance of exterior plants during a calendar year. Submit before expiration of required maintenance periods.

1.5 QUALITY ASSURANCE

A. Installer Qualifications: A qualified landscape installer whose work has resulted in successful establishment of exterior plants.
   1. Installer's Field Supervision: Require Installer to maintain an experienced full-time supervisor on Project site when exterior planting is in progress.

B. Soil-Testing Laboratory Qualifications: An independent laboratory, recognized by the State Department of Agriculture, with the experience and capability to conduct the testing indicated and that specializes in types of tests to be performed.

C. Topsoil Analysis: Furnish soil analysis by a qualified soil-testing laboratory stating percentages of organic matter; gradation of sand, silt, and clay content; cation exchange capacity; sodium absorption ratio; deleterious material; pH; and mineral and plant-nutrient content of topsoil.
   1. Report suitability of topsoil for plant growth. State recommended quantities of nitrogen, phosphorus, and potash nutrients and soil amendments to be added to produce a satisfactory topsoil.

D. Provide quality, size, genus, species, and variety of exterior plants indicated, complying with applicable requirements in ANSI Z60.1, "American Standard for Nursery Stock."
   1. Selection of exterior plants purchased under allowances will be made by Owners Representative, who will tag plants at their place of growth before they are prepared for transplanting.

E. Tree and Shrub Measurements: Measure according to ANSI Z60.1 the “American Standard for Nursery Stock”, or “Grades and Standards for Nursery Plants”, Florida Department of Agriculture, (which ever is greater) with branches and trunks or canes in their normal position. Do not prune to obtain required sizes. Take caliper measurements 6 inches above ground for trees up to 4-inch caliper size, and 12 inches above ground for larger sizes. Measure main body of tree or shrub for height and spread; do not measure branches or roots tip-to-tip.

F. Observation: Architect may observe trees and shrubs either at place of growth or at site before planting for compliance with requirements for genus, species, variety, size, and quality. Architect retains right to observe trees and shrubs further for size and condition of balls and root systems, insects, injuries, and latent defects and to reject unsatisfactory or defective material at

any time during progress of work. Remove rejected trees or shrubs immediately from Project site.

1. Notify Architect of sources of planting materials upon submission of bid or proposal to General Contractor.

G. Pre-installation Conference: Conduct conference at Project site with owners representative and Installing Contractor to become familiar with operational requirements.

1.6 DELIVERY, STORAGE, AND HANDLING

A. Deliver exterior plants freshly dug.

B. Do not prune trees and shrubs before delivery, except as approved by Architect. Protect bark, branches, and root systems from sun scald, drying, sweating, whipping, and other handling and tying damage. Do not bend or bind-tie trees or shrubs in such a manner as to destroy their natural shape. Provide protective covering of exterior plants during delivery. Do not drop exterior plants during delivery.

C. Handle planting stock by root ball.

D. Deliver exterior plants after preparations for planting have been completed and install immediately. If planting is delayed more than six hours after delivery, set exterior plants trees in shade, protect from weather and mechanical damage, and keep roots moist.

1. Heel-in bare-root stock. Soak roots in water for two hours if dried out.
2. Set balled stock on ground and cover ball with soil, peat moss, sawdust, or other acceptable material.
3. Do not remove container-grown stock from containers before time of planting.
4. Water root systems of exterior plants stored on-site with a fine-mist spray. Water as often as necessary to maintain root systems in a moist condition.

1.7 COORDINATION

A. Coordination with Lawns: Plant trees and shrubs after finish grades are established and before planting lawns, unless otherwise acceptable to Architect.

1. When planting trees and shrubs after lawns, protect lawn areas and promptly repair damage caused by planting operations.

1.8 WARRANTY

A. Special Warranty: Warrant the following exterior plants, for the warranty period indicated, against defects including death and unsatisfactory growth, except for defects resulting from lack of adequate maintenance, neglect, or abuse by Owner, or incidents that are beyond Contractor's control.

1. Warranty Period for Trees and Shrubs: One year from date of Substantial Completion.
2. Warranty Period for Ground Cover and Plants: Three months from date of Substantial Completion.
3. Remove dead exterior plants immediately. Replace immediately unless required to plant in the succeeding planting season.
4. Replace exterior plants that are more than 25 percent dead or in an unhealthy condition at end of warranty period.

5. A limit of one replacement of each exterior plant will be required, except for losses or replacements due to failure to comply with requirements.

1.9 MAINTENANCE

A. Trees and Shrubs: Maintain for the following maintenance period by pruning, cultivating, watering, weeding, fertilizing, restoring planting saucers, tightening and repairing stakes and guy supports, and resetting to proper grades or vertical position, as required to establish healthy, viable plantings. Spray as required to keep trees and shrubs free of insects and disease. Restore or replace damaged tree wrappings.
   1. Maintenance Period: Three months from date of Final Inspection.

B. Ground Cover and Plants: Maintain for the following maintenance period by watering, weeding, fertilizing, and other operations as required to establish healthy, viable plantings:
   1. Maintenance Period: Three months from date of Final Inspection.

PART 2 - PRODUCTS

2.1 TREE AND SHRUB MATERIAL

A. General: Furnish nursery-grown trees and shrubs complying with ANSI Z60.1, with healthy root systems developed by transplanting or root pruning. Provide well-shaped, fully branched, healthy, vigorous stock free of disease, insects, eggs, larvae, and defects such as knots, sun scald, injuries, abrasions, and disfigurement.

B. Grade: Provide trees and shrubs of sizes and grades complying with ANSI Z60.1 for type of trees and shrubs required. Trees and shrubs of a larger size may be used if acceptable to Architect, with a proportionate increase in size of roots or balls.

C. Label at least one tree and one shrub of each variety and caliper with a securely attached, waterproof tag bearing legible designation of botanical and common name.

D. If formal arrangements or consecutive order of trees or shrubs is shown, select stock for uniform height and spread, and number label to assure symmetry in planting.

2.2 SHADE AND FLOWERING TREES

A. Shade Trees: Single-stem trees with straight trunk, well-balanced crown, and intact leader, of height and caliper indicated, complying with ANSI Z60.1, American Standard for Nursery Stock or Grades and Standards for Nursery Plants, Florida Department of Agriculture, (which ever is greater) for type of trees required.
   1. Provide trees which were container-grown or field grown (using Roots Plus Growers, (RPG) standards).
   2. Branching Height: One-third to one-half of tree height, based on species standard.

B. Small Single Trunk Flowering Trees: Branched or pruned naturally according to species and type, with relationship of caliper, height, and branching according to ANSI Z60.1, American Standard for Nursery Stock or Grades and Standards for Nursery Plants, Florida Department of Agriculture, (which ever is greater); stem form as follows:
   1. Stem Form: Single stem, trained in nursery to achieve listed specification.

2. Provide balled and burlapped, or container-grown trees as specified on the plant list.

C. Multistem Trees: Branched or pruned naturally according to species and type, with relationship of caliper, height, and branching according to ANSI Z60.1, American Standard for Nursery Stock or Grades and Standards for Nursery Plants, Florida Department of Agriculture, (which ever is greater); stem form as follows:

1. Stem Form: Multiple trunks (three or greater) which are equal to each other in their function and form giving characteristics, each shall originate from the root ball at grade or no higher than 8” from grade
2. Provide balled and burlapped, container-grown, or fabric bag-grown trees.

2.3 DECIDUOUS SHRUBS

A. Form and Size: Deciduous shrubs with not less than the minimum number of canes required by and measured according to ANSI Z60.1, American Standard for Nursery Stock or Grades and Standards for Nursery Plants, Florida Department of Agriculture, (which ever is greater) for type, shape, and height of shrub.

1. Provide balled and burlapped, or container-grown shrubs as specified on the plant list.

2.4 CONIFEROUS EVERGREENS

A. Form and Size: Normal-quality, well-balanced, coniferous evergreens, of type, height, spread, and shape required, complying with ANSI Z60.1, American Standard for Nursery Stock or Grades and Standards for Nursery Plants, Florida Department of Agriculture, (which ever is greater).

1. Provide balled and burlapped, container-grown shrubs and trees, as specified on the plant list.

2.5 BROADLEAF EVERGREENS

A. Form and Size: Normal-quality, well-balanced, broadleaf evergreens, of type, height, spread, and shape required, complying with ANSI Z60.1, American Standard for Nursery Stock or Grades and Standards for Nursery Plants, Florida Department of Agriculture, (which ever is greater).

1. Provide balled and burlapped, or container-grown shrubs and trees as specified in the plant list.

2.6 GROUND COVER PLANTS

A. Ground Cover: Provide ground cover of species indicated, established and well rooted in pots or similar containers, and complying with ANSI Z60.1, American Standard for Nursery Stock or Grades and Standards for Nursery Plants, Florida Department of Agriculture, (which ever is greater) and the requirements listed in the plant list.

2.7 SPECIAL PLANTS AND GRASSES

A. Annuals: Provide healthy, disease-free plants of species and variety shown or listed. Provide only plants that are acclimated to outdoor conditions before delivery and that are in bud but not yet in bloom.

B. Perennials: Provide healthy, field-grown plants from a commercial nursery, of species and variety shown or listed.

C. Vines: Provide vines of species indicated complying with requirements in ANSI Z60.1 as follows:
   1. Two-year plants with heavy, well-branched tops, with not less than 3 runners 18 inches or more in length, and with a vigorous well-developed root system.
   2. Provide vines grown in containers of specified size and acclimated to outside conditions.

D. Ornamental Grasses: Provide grasses of species indicated complying with requirements in ANSI Z60.1 as follows:
   1. Heavy, full tops, 18 inches or more in length, and with a vigorous well-developed root system.
   2. Provide grasses grown in pots of specified size and acclimated to outside conditions.

2.8 TOPSOIL

A. Topsoil: ASTM D 5268, pH range of 5.5 to 7 or as appropriate for the plants being installed, a minimum of 6 percent organic material content; free of stones 1/2 inch or larger in any dimension and other extraneous materials harmful to plant growth.
   1. Topsoil Source: Reuse surface soil either undisturbed or stockpiled on-site. Verify suitability of stockpiled surface soil to produce topsoil. Clean surface soil of roots, plants, sod, stones, clay lumps, and other extraneous materials harmful to plant growth.
   a. Amend existing in-place surface soil to produce topsoil. Verify suitability of surface soil to produce topsoil. Clean surface soil of roots, plants, sod, stones, clay lumps, and other extraneous materials harmful to plant growth.
   b. Supplement with imported or manufactured topsoil from off-site sources when quantities are insufficient. Obtain topsoil displaced from naturally well-drained construction or mining sites where topsoil occurs at least 4 inches deep; do not obtain from agricultural land, bogs or marshes.

2.9 INORGANIC SOIL AMENDMENTS

A. Lime: ASTM C 602, agricultural limestone containing a minimum 80 percent calcium carbonate equivalent and as follows:
   1. Class: Class T, with a minimum 99 percent passing through No. 8 sieve and a minimum 75 percent passing through No. 60 sieve.
   2. Class: Class O, with a minimum 95 percent passing through No. 8 sieve and a minimum 55 percent passing through No. 60 sieve.
   3. Provide lime in form of dolomitic limestone.

B. Sulfur: Granular, biodegradable, containing a minimum of 90 percent sulfur, with a minimum 99 percent passing through No. 6 sieve and a maximum 10 percent passing through No. 40 sieve.

C. Iron Sulfate: Granulated ferrous sulfate containing a minimum of 20 percent iron and 10 percent sulfur.

D. Aluminum Sulfate: Commercial grade, unadulterated.

E. Perlite: Horticultural perlite, soil amendment grade.

F. Agricultural Gypsum: Finely ground, containing a minimum of 90 percent calcium sulfate.

G. Sand: Clean, washed, natural or manufactured, free of toxic materials.

H. Diatomaceous Earth: Calcined, diatomaceous earth, 90 percent silica, with approximately 140 percent water absorption capacity by weight.

I. Zeolites: Mineral clinoptilolite with at least 60 percent water absorption by weight.

2.10 ORGANIC SOIL AMENDMENTS

A. Compost: Well-composted, stable, and weed-free organic matter, pH range of 5.5 to 8; moisture content 35 to 55 percent by weight; 100 percent passing through 1-inch sieve; soluble salt content of 5 to 10 decisiemens/m; not exceeding 0.5 percent inert contaminants and free of substances toxic to plantings; and as follows:
   1. Organic Matter Content: 60 percent of dry weight.
   2. Feedstock: Agricultural, food, or industrial residuals; biosolids; yard trimmings; or source-separated or compostable mixed solid waste.

B. Sphagnum Peat: Sphagnum peat moss, partially decomposed, finely divided or granular texture, with a pH range of 3.4 to 4.8.

C. Peat: Finely divided or granular texture, with a pH range of 6 to 7.5, containing partially decomposed moss peat, native peat, or reed-sedge peat and having a water-absorbing capacity of 1100 to 2000 percent.

D. Wood Derivatives: Decomposed, nitrogen-treated sawdust, ground bark, or wood waste; of uniform texture, free of chips, stones, sticks, soil, or toxic materials.
   1. In lieu of decomposed wood derivatives, mix partially decomposed wood derivatives with at least 0.15 lb of ammonium nitrate or 0.25 lb of ammonium sulfate per cubic foot of loose sawdust or ground bark.

E. Manure: Well-rotted, unleached, stable or cattle manure containing not more than 25 percent by volume of straw, sawdust, or other bedding materials; free of toxic substances, stones, sticks, soil, weed seed, and material harmful to plant growth.

2.11 FERTILIZER

A. Bonemeal: Commercial, raw or steamed, finely ground; a minimum of 4 percent nitrogen and 20 percent phosphoric acid.

B. Superphosphate: Commercial, phosphate mixture, soluble; a minimum of 20 percent available phosphoric acid.

C. Commercial Fertilizer: Commercial-grade complete fertilizer of neutral character, consisting of fast- and slow-release nitrogen, 50 percent derived from natural organic sources of urea formaldehyde, phosphorous, and potassium in the following composition:
   1. Composition: 1 lb/1000 sq. ft. of actual nitrogen, 4 percent phosphorous, and 2 percent potassium, by weight.
   2. Composition: Nitrogen, phosphorous, and potassium in amounts recommended in soil reports from a qualified soil-testing agency.

D. Slow-Release Fertilizer: Granular or pelleted fertilizer consisting of 50 percent water-insoluble nitrogen, phosphorus, and potassium in the following composition:
   1. Composition: 20 percent nitrogen, 10 percent phosphorous, and 10 percent potassium, by weight.
   2. Composition: Nitrogen, phosphorous, and potassium in amounts recommended in soil reports from a qualified soil-testing agency.

2.12 MULCHES

A. Organic Mulch: Free from deleterious materials and suitable as a top dressing of trees and shrubs, consisting of the following: Shredded Pine Bark.

B. Gravel Mulch: 2” layer of ¾” Tan Color, Stream Washed Stone. Place on layer of Weed Control Barrier.

2.13 WEED-CONTROL BARRIERS

A. Non-woven Fabric: Polypropylene or polyester fabric, 3 oz./sq. yd. minimum.

2.14 STAKES AND GUYS

A. Upright and Guy Stakes: Rough-sawn, sound, new hardwood, redwood, or pressure-preservative-treated softwood, free of knots, holes, cross grain, and other defects, 2 by 2 inches by length indicated, pointed at one end.

B. Guy and Tie Wire: ASTM A 641/A 641M, Class 1, galvanized-steel wire, 2-strand, twisted, 0.106 inch in diameter.

C. Guy Cable: 5-strand, 3/16-inch- diameter, galvanized-steel cable, with zinc-coated turnbuckles, a minimum of 3 inches long, with two 3/8-inch galvanized eyebolts.

D. Hose Chafing Guard: Reinforced rubber or plastic hose at least 1/2 inch in diameter, black, cut to lengths required to protect tree trunks from damage.

E. Flags: Standard surveyor's plastic flagging tape, white, 6 inches long and or 3’ of ½” White PVC Pipe fitted over guy wires when guy is within 2’ of sidewalks, as shown in detail.

2.15 MISCELLANEOUS PRODUCTS

A. Antidesiccant: Water-insoluble emulsion, permeable moisture retarder, film forming, for trees and shrubs. Deliver in original, sealed, and fully labeled containers and mix according to manufacturer's written instructions.

2.16 PLANTING SOIL MIX

A. Planting Soil Mix: Mix topsoil with the following soil amendments and fertilizers in the following quantities:
   1. Ratio of Loose Compost to Topsoil by Volume: 1:3.
   2. Soil Amendments to adjust pH as required by soil test results.
   3. Weight of Slow-Release Fertilizer per 1000 Sq. Ft.: determined by soil analysis of existing site soil and plants being installed. Submit finding of report and rate of fertilizer.

PART 3 - EXECUTION

3.1 EXAMINATION

A. Examine areas to receive exterior plants for compliance with planting specification requirements and conditions affecting installation and plant performance. Proceed with installation only after unsatisfactory conditions have been corrected.

3.2 PREPARATION

A. Protect structures, utilities, sidewalks, pavements, and other facilities, and lawns and existing exterior plants from damage that may be caused by planting operations.

B. Provide erosion-control measures to prevent erosion or displacement of soils and discharge of soil-bearing water runoff or airborne dust to adjacent properties and walkways.

C. Lay out individual tree and shrub locations and areas for multiple exterior plantings. Stake locations, outline areas, adjust locations when requested, and obtain Architect's acceptance of layout before planting. Make minor adjustments as required.

E. Apply anti-desiccant to trees and shrubs using power spray to provide an adequate film over trunks, branches, stems, twigs, and foliage to protect during digging, handling, and transportation.
   1. If deciduous trees or shrubs are moved in full leaf, spray with anti-desiccant at nursery before moving and again two weeks after planting.

3.3 PLANTING BED ESTABLISHMENT

A. Loosen sub-grade of planting beds to a minimum depth of 4 inches. Remove stones larger than 1 inch in any dimension and sticks, roots, rubbish, and other extraneous matter and legally dispose of them off Owner's property.
   1. Apply approved slow release fertilizer directly to sub-grade before loosening.
   2. Thoroughly blend planting soil mix off-site before spreading or spread topsoil, apply soil amendments and fertilizer on surface, and thoroughly blend planting soil mix.
      a) Delay mixing fertilizer with planting soil if planting will not proceed within a few days.
      b) Mix lime, when needed, with dry soil before mixing fertilizer.
   3. Spread planting soil mix to a depth of 4 inches in shrub trenches and flower, grasses and ground cover beds but not less than required to meet finish grades

after natural settlement. Do not spread if planting soil or sub-grade is frozen, muddy, or excessively wet.

a) Spread approximately one-half the thickness of planting soil mix over loosened sub-grade. Mix thoroughly into top 2 inches of sub-grade. Spread remainder of planting soil mix.

B. Finish Grading: Grade planting beds to a smooth, uniform surface plane with loose, uniformly fine texture. Roll and rake, remove ridges, and fill depressions to meet finish grades and perform as designed for surface drainage.

C. Restore planting beds if eroded or otherwise disturbed after finish grading and before planting.

3.4 TREE AND SHRUB EXCAVATION

A. Pits and Trenches: Excavate circular pits with sides sloped inward. Trim base leaving center area raised slightly to support root ball and assist in drainage. Do not further disturb base. Scarify sides of plant pit smeared or smoothed during excavation.

1. Excavate approximately three times as wide as ball diameter for balled and burlapped, and container-grown stock.
2. If drain tile is shown or required under planted areas, excavate to top of porous backfill over tile.

B. Subsoil removed from excavations may be used as backfill after modified as described in 2.16.

C. Obstructions: Notify Architect if unexpected rock or obstructions detrimental to trees or shrubs are encountered in excavations.

D. Drainage: Notify Architect if subsoil conditions evidence unexpected water seepage or retention in tree or shrub pits. Test each excavation as follows:

1. Fill excavations with water and allow to percolate away before positioning trees and shrubs. If water does not drain quickly stop work at that location and inform owner before proceeding with the following procedure.

a) Hardpan Layer: Drill 6-inch- diameter holes into free-draining strata or to a depth of 10 feet, whichever is less, and backfill with free-draining material. Re-test each excavation for percolation.

3.5 TREE AND SHRUB PLANTING

A. Set balled and burlapped stock plumb and in center of pit or trench with top of root ball 1 inch above adjacent finish grades.

1. Remove burlap and wire baskets from tops of root balls and partially from sides, but do not remove from under root balls. Remove pallets, if any, before setting. Do not use planting stock if root ball is cracked or broken before or during planting operation.
2. Place planting soil mix around root ball in layers, tamping to settle mix and eliminate voids and air pockets. When pit is approximately one-half backfilled, water thoroughly before placing remainder of backfill. Repeat watering until no more water is absorbed. Water again after placing and tamping final layer of planting soil mix.

B. Set container-grown stock plumb and in center of pit or trench with top of root ball 1 inch above adjacent finish grades.

1. Carefully remove root ball from container without damaging root ball or plant.

2. Place planting soil mix around root ball in layers, tamping to settle mix and eliminate voids and air pockets. When pit is approximately one-half backfilled, water thoroughly before placing remainder of backfill. Repeat watering until no more water is absorbed. Water again after placing and tamping final layer of planting soil mix.

C. Organic Mulching: Apply 3-inch average thickness of organic mulch extending 12 inches beyond edge of planting pit or trench or covering the entire planting bed area as shown on plan.

3.6 TREE AND SHRUB PRUNING

A. Prune, thin, and shape trees and shrubs as directed by Architect.

B. Prune, thin, and shape trees and shrubs according to standard horticultural practice. Prune trees to retain required height and spread. Unless otherwise indicated by Architect, do not cut tree leaders; remove only injured or dead branches from flowering trees. Prune shrubs to retain natural character. Shrub sizes indicated are sizes after pruning.

3.7 GUYING AND STAKING

A. Upright Staking and Tying: Stake trees of 2- through 3-inch caliper. Stake trees of less than 2-inch caliper only as required to prevent wind tip-out. Use a minimum of 2 stakes of length required to penetrate at least 18 inches below bottom of backfilled excavation and to extend at least 72 inches above grade. Set vertical stakes and space to avoid penetrating root balls or root masses. Support trees with two strands of tie wire encased in hose sections at contact points with tree trunk. Allow enough slack to avoid rigid restraint of tree. Use the number of stakes as follows:
   1. Use 2 stakes for trees, space stakes equally around trees.

B. Guying and Staking: Guy and stake trees exceeding more than 3 inches in caliper, unless otherwise indicated. Securely attach no fewer than 3 guys to stakes 30 inches long, driven to grade.
   1. For trees more than 6 inches in caliper, anchor guys to pressure-preservative-treated deadmen 8 inches in diameter and 48 inches long buried at least 36 inches below grade. Provide turnbuckles for each guy wire and tighten securely.
   2. Attach flags to each guy wire, 30 inches above finish grade.
   3. When guy wires are located within 2’ of a sidewalk install a 3’ long – ½” white PVC pipe on the guy wire.

3.8 PLANTERS

A. Freestanding Planters: If Present. Place a layer of gravel at least 4 inches thick in bottom of planters, cover with non-woven fabric, and fill with planter soil mix. Place soil in lightly compacted layers to an elevation of 1-1/2 inches below top of planter, allowing natural settlement.
   1. Planter Soil Mix: One part topsoil, one part coarse sand, one part peat, and 3 lb of dolomitic limestone per cubic yard of mix.

3.9 GROUND COVER, ORNIMENTAL GRASSES, ANNUAL AND PERENNIAL PLANTING

A. Set out and space ground cover and plants as specified on plant list.

B. Dig holes large enough to allow spreading of roots, and backfill with planting soil.

C. Work soil around roots to eliminate air pockets and leave a slight saucer indentation around plants to hold water.

D. Water thoroughly after planting, taking care not to cover plant crowns with wet soil.

E. Protect plants from hot sun and wind; remove protection if plants show evidence of recovery from transplanting shock.

3.10 PLANTING BED MULCHING

A. When called for on the plans, install weed-control barriers before mulching according to manufacturer's written instructions. Completely cover area to be mulched, overlapping edges a minimum of 6 inches.
   1. Material and Seam Treatment: Nonwoven fabric with seams pinned.

B. Mulch backfilled surfaces of planting beds and other areas indicated.
   1. Organic Mulch: Apply 3-inch average thickness of organic mulch, and finish level with adjacent finish grades. Do not place mulch against plant stems.

3.11 CLEANUP AND PROTECTION

A. During exterior planting, keep adjacent paving and construction clean and work area in an orderly condition.

B. Protect exterior plants from damage due to landscape operations, operations by other contractors and trades, and others. Maintain protection during installation and maintenance periods. Treat, repair, or replace damaged exterior planting.

3.12 DISPOSAL

A. Disposal: Remove surplus soil and waste material, including excess subsoil, unsuitable soil, trash, and debris, and legally dispose of them off Owner's property.

END OF SECTION

SECTION 03300 - CAST-IN-PLACE CONCRETE

PART 1 - GENERAL

1.1 SUMMARY

A. This Section specifies cast-in place concrete, including formwork, reinforcement, concrete materials, mixture design, placement procedures, and finishes.

B. See Division 2 Section "Earthwork" for drainage fill under slabs-on-grade.

1.2 SUBMITTALS

A. Product Data: For each type of product indicated.

B. Design Mixtures: For each concrete mixture.

C. Shop Drawings: For steel reinforcement.

D. Material test reports, certificates.

1.3 QUALITY ASSURANCE

A. Manufacturer Qualifications: A firm experienced in manufacturing ready-mixed concrete products and that complies with ASTM C 94/C 94M requirements for production facilities and equipment.

1. Manufacturer certified according to NRMCA's "Certification of Ready Mixed Concrete Production Facilities."

B. ACI Publications: Comply with the following unless modified by requirements in the Contract Documents:

1. ACI 301, "Specification for Structural Concrete," Sections 1 through 5
2. ACI 117, "Specifications for Tolerances for Concrete Construction and Materials."

C. Pre-installation Conference: Conduct conference at Project site.

PART 2 - PRODUCTS

2.1 FORM-FACING MATERIALS

A. Smooth-Formed Finished Concrete: Form-facing panels that will provide continuous, true, and smooth concrete surfaces. Furnish in largest practicable sizes to minimize number of joints.

B. Rough-Formed Finished Concrete: Plywood, lumber, metal, or another approved material. Provide lumber dressed on at least two edges and one side for tight fit.

2.2 STEEL REINFORCEMENT

A. Reinforcing Bars: ASTM A 615/A 615M, Grade 60, deformed.

B. Plain-Steel Welded Wire Reinforcement: ASTM A 185, plain, fabricated from as-drawn steel wire into flat sheets.

C. Deformed-Steel Welded Wire Reinforcement: ASTM A 497, flat sheet.

D. Galvanized-Steel Welded Wire Reinforcement: ASTM A 185, plain, fabricated from galvanized steel wire into flat sheets.

E. Bar Supports: Bolsters, chairs, spacers, and other devices for spacing, supporting, and fastening reinforcing bars and welded wire reinforcement in place. Manufacture bar supports from steel wire, plastic, or precast concrete according to CRSI's "Manual of Standard Practice."

2.3 CONCRETE MATERIALS

A. Cementitious Material: Use the following cementitious materials, of the same type, brand, and source, throughout Project:

1. Portland Cement: ASTM C 150, Type I/II Supplement with the following:

   a. Fly Ash: ASTM C 618, Class F.
   b. Ground Granulated Blast-Furnace Slag: ASTM C 989, Grade 100 or 120.

2. Blended Hydraulic Cement: ASTM C 595, Type IP, portland-pozzolan cement.

B. Normal-Weight Aggregates: ASTM C 33, graded, 1-1/2-inch nominal maximum coarse-aggregate size.

1. Fine Aggregate: Free of materials with deleterious reactivity to alkali in cement.

C. Water: ASTM C 94/C 94M and potable.

D. Air-Entraining Admixture: ASTM C 260.

E. Chemical Admixtures: Provide admixtures certified by manufacturer to be compatible with other admixtures and that will not contribute water-soluble chloride ions exceeding those permitted in hardened concrete. Do not use calcium chloride or admixtures containing calcium chloride.

1. Water-Reducing Admixture: ASTM C 494/C 494M, Type A.
2. Retarding Admixture: ASTM C 494/C 494M, Type B.
3. Water-Reducing and Retarding Admixture: ASTM C 494/C 494M, Type D.
4. High-Range, Water-Reducing Admixture: ASTM C 494/C 494M, Type F.

5. High-Range, Water-Reducing and Retarding Admixture: ASTM C 494/C 494M, Type G.
6. Plasticizing and Retarding Admixture: ASTM C 1017/C 1017M, Type II.

F. Synthetic Fiber: fibrillated polypropylene fibers engineered and designed for use in concrete pavement, complying with ASTM C 1116, Type III, 1/2 to 1-1/2 inches

G. Plastic Vapor Retarder: ASTM E 1745, Class C**,** or polyethylene sheet, ASTM D 4397, not less than 10 mils thick. Include manufacturer's recommended adhesive or pressure-sensitive joint tape.

2.4 CURING MATERIALS

A. Evaporation Retarder: Waterborne, monomolecular film forming, manufactured for application to fresh concrete.

B. Absorptive Cover: AASHTO M 182, Class 2, burlap cloth made from jute or kenaf, weighing approximately 9 oz./sq. yd. when dry.

C. Moisture-Retaining Cover: ASTM C 171, polyethylene film or white burlap-polyethylene sheet.

D. Water: Potable.

E. Clear, Waterborne, Membrane-Forming Curing Compound: ASTM C 309, Type 1, Class B, dissipating.

F. Clear, Waterborne, Membrane-Forming Curing and Sealing Compound: ASTM C 1315, Type 1, Class A.

2.5 RELATED MATERIALS

A. Expansion- and Isolation-Joint-Filler Strips: ASTM D 1751, asphalt-saturated cellulosic fiber.

2.6 CONCRETE MIXTURES

A. Prepare design mixtures for each type and strength of concrete, proportioned on the basis of laboratory trial mixture or field test data, or both, according to ACI 301.

B. Proportion normal-weight concrete mixture as follows:

1. Minimum Compressive Strength: 3000 psi at 28 days.
2. Maximum Water-Cementitious Materials Ratio: 0.50.
3. Slump Limit: 5 inches, plus or minus 1 inch.
4. Air Content: Do not allow air content of troweled finished floors to exceed 3 percent.
5. Synthetic Fiber: Uniformly disperse in concrete mixture at manufacturer's recommended rate, but not less than 1.5 lb/cu. yd.

2.7 FABRICATING REINFORCEMENT

A. Fabricate steel reinforcement according to CRSI's "Manual of Standard Practice."

2.8 CONCRETE MIXING

A. Ready-Mixed Concrete: Measure, batch, mix, and deliver concrete according to ASTM C 94, and furnish batch ticket information.

1. When air temperature is between 85 and 90 deg F , reduce mixing and delivery time from 1-1/2 hours to 75 minutes; when air temperature is above 90 deg F, reduce mixing and delivery time to 60 minutes.

PART 3 - EXECUTION

3.1 FORMWORK

A. Design, erect, shore, brace, and maintain formwork according to ACI 301 to support vertical, lateral, static, and dynamic loads, and construction loads that might be applied, until structure can support such loads.

B. Construct formwork so concrete members and structures are of size, shape, alignment, elevation, and position indicated, within tolerance limits of ACI 117.

C. Do not chamfer exterior corners and edges of permanently exposed concrete.

3.2 EMBEDDED ITEMS

A. Place and secure anchorage devices and other embedded items required for adjoining work that is attached to or supported by cast-in-place concrete. Use setting drawings, templates, diagrams, instructions, and directions furnished with items to be embedded.

3.3 VAPOR RETARDERS

A. Plastic Vapor Retarders: Place, protect, and repair vapor retarders according to ASTM E 1643 and manufacturer's written instructions.

1. Lap joints 6 inches and seal with manufacturer's recommended tape.

3.4 STEEL REINFORCEMENT

A. General: Comply with CRSI's "Manual of Standard Practice" for placing reinforcement.

1. Do not cut or puncture vapor retarder. Repair damage and reseal vapor retarder before placing concrete.

3.5 JOINTS

A. General: Construct joints true to line with faces perpendicular to surface plane of concrete.

B. Construction Joints: Install so strength and appearance of concrete are not impaired, at locations indicated or as approved by Architect.

C. Contraction Joints in Slabs-on-Grade: Form weakened-plane contraction joints, sectioning concrete into areas as indicated. Construct contraction joints for a depth equal to at least one-fourth of concrete thickness as follows:

1. Grooved Joints: Form contraction joints after initial floating by grooving and finishing each edge of joint to a radius of 1/8 inch. Repeat grooving of contraction joints after applying surface finishes. Eliminate groover tool marks on concrete surfaces.
2. Sawed Joints: Form contraction joints with power saws equipped with shatterproof abrasive or diamond-rimmed blades. Cut 1/8-inch- wide joints into concrete when cutting action will not tear, abrade, or otherwise damage surface and before concrete develops random contraction cracks.

D. Isolation Joints in Slabs-on-Grade: After removing formwork, install joint-filler strips at slab junctions with vertical surfaces, such as column pedestals, foundation walls, grade beams, and other locations, as indicated.

3.6 CONCRETE PLACEMENT

A. Before placing concrete, verify that installation of formwork, reinforcement, and embedded items is complete and that required inspections have been performed.

B. Deposit concrete continuously in one layer or in horizontal layers of such thickness that no new concrete will be placed on concrete that has hardened enough to cause seams or planes of weakness. If a section cannot be placed continuously, provide construction joints as indicated. Deposit concrete to avoid segregation.

1. Consolidate placed concrete with mechanical vibrating equipment according to ACI 301.

C. Cold-Weather Placement: Comply with ACI 306.1.

D. Hot-Weather Placement: Comply with ACI 301.

3.7 FINISHING FORMED SURFACES

A. Rough-Formed Finish: As-cast concrete texture imparted by form-facing material with tie holes and defects repaired and patched. Remove fins and other projections that exceed specified limits on formed-surface irregularities.

1. Apply to concrete surfaces not exposed to public view.

B. Smooth-Formed Finish: As-cast concrete texture imparted by form-facing material, arranged in an orderly and symmetrical manner with a minimum of seams. Repair and

patch tie holes and defects. Remove fins and other projections that exceed specified limits on formed-surface irregularities.

1. Apply to concrete surfaces exposed to public view.

3.8 FINISHING FLOORS AND SLABS

A. General: Comply with ACI 302.1R recommendations for screeding, restraightening, and finishing operations for concrete surfaces. Do not wet concrete surfaces.

B. Scratch Finish: While still plastic, texture concrete surface that has been screeded and bull-floated or darbied. Use stiff brushes, brooms, or rakes to produce a profile amplitude of 1/4 inch in 1 direction.

1. Apply scratch finish to surfaces indicated and surfaces to receive concrete floor toppings.

C. Float Finish: Consolidate surface with power-driven floats or by hand floating if area is small or inaccessible to power driven floats. Restraighten, cut down high spots, and fill low spots. Repeat float passes and restraightening until surface is left with a uniform, smooth, granular texture.

1. Apply float finish to surfaces to receive trowel finish .

D. Trowel Finish: After applying float finish, apply first troweling and consolidate concrete by hand or power-driven trowel. Continue troweling passes and restraighten until surface is free of trowel marks and uniform in texture and appearance. Grind smooth any surface defects that would telegraph through applied coatings or floor coverings.

1. Apply a trowel finish to surfaces exposed to view or to be covered with resilient flooring, carpet, ceramic or quarry tile set over a cleavage membrane, paint, or another thin-film-finish coating system.
2. Finish and measure surface so gap at any point between concrete surface and an unleveled, freestanding, 10-foot- long straightedge resting on 2 high spots and placed anywhere on the surface does not exceed 1/4 inch.

E. Trowel and Fine-Broom Finish: Apply a first trowel finish to surfaces indicated or where ceramic or quarry tile is to be installed by either thickset or thin-set method. While concrete is still plastic, slightly scarify surface with a fine broom.

1. Comply with flatness and levelness tolerances for trowel finished floor surfaces.

F. Broom Finish: Apply a broom finish to exterior concrete platforms, steps, and ramps, and elsewhere as indicated.

3.9 CONCRETE PROTECTING AND CURING

A. General: Protect freshly placed concrete from premature drying and excessive cold or hot temperatures. Comply with ACI 306.1 for cold-weather protection and ACI 301 for hot-weather protection during curing.

B. Evaporation Retarder: Apply evaporation retarder to unformed concrete surfaces if hot, dry, or windy conditions cause moisture loss approaching 0.2 lb/sq. ft. x h before and during finishing operations. Apply according to manufacturer's written instructions after placing, screeding, and bull floating or darbying concrete, but before float finishing.

C. Cure concrete according to ACI 308.1, by one or a combination of the following methods:

1. Moisture Curing: Keep surfaces continuously moist for not less than seven days.
2. Moisture-Retaining-Cover Curing: Cover concrete surfaces with moisture-retaining cover for curing concrete, placed in widest practicable width, with sides and ends lapped at least 12 inches, and sealed by waterproof tape or adhesive. Cure for not less than seven days. Immediately repair any holes or tears during curing period using cover material and waterproof tape.
3. Curing Compound: Apply uniformly in continuous operation by power spray or roller according to manufacturer's written instructions. Recoat areas subjected to heavy rainfall within three hours after initial application. Maintain continuity of coating and repair damage during curing period.

    a. After curing period has elapsed, remove curing compound without damaging concrete surfaces by method recommended by curing compound manufacturer unless manufacturer certifies curing compound will not interfere with bonding of floor covering used on Project.

4. Curing and Sealing Compound: Apply uniformly to floors and slabs indicated in a continuous operation by power spray or roller according to manufacturer's written instructions. Recoat areas subjected to heavy rainfall within three hours after initial application. Repeat process 24 hours later and apply a second coat. Maintain continuity of coating and repair damage during curing period.

3.10 CONCRETE SURFACE REPAIRS

A. Defective Concrete: Repair and patch defective areas when approved by Architect. Remove and replace concrete that cannot be repaired and patched to Architect's approval.

3.11 FIELD QUALITY CONTROL

A. Testing and Inspecting: Owner will engage a qualified independent testing and inspecting agency to perform field tests and inspections and prepare test reports.

1. Testing Services: Tests shall be performed according to ACI 301.

2. END OF SECTION 03300

SECTION 03310 - CONCRETE WORK

PART 1 - GENERAL

1.01 SUMMARY

A. The extent of concrete work is shown on the Drawings.

1.02 RELATED WORK

A. EARTHWORK: Section 02200.

B. TERMITE CONTROL: Section 02282.

C. UNIT MASONRY: Section 04200.

D. METAL DECKING: Section 05300.

E. TILE: Section 09300.

1.03 QUALITY ASSURANCE

A. Codes and Standards: Conform to provisions of the following, unless otherwise indicated or specified:

1. American Concrete Institute (ACI):

a.	ACI 301	Specifications for Structural Concrete for Buildings.
b.	ACI 304	Guide for Measuring, Mixing, Transporting, and Placing Concrete.
c.	ACI 305	Hot Weather Concreting.
d.	ACI 306	Standard Specification for Cold Weather Concreting.
e.	ACI 315	Manual of Standard Practice for Detailing Reinforced Concrete Structures.
f.	ACI 318	Building Code Requirements for Reinforced Concrete.

g. ACI 347 Recommended Practice for Concrete Formwork.

h. ACI 504R Guide to Sealing Joints in Concrete Structures.

2. American Society for Testing and Materials (ASTM):

a. Referenced Standards.

3. Concrete Reinforcing Steel Institute (CRSI):

a. Manual of Standard Practice.

4. U.S. Army Corps of Engineers (CE):

a. CE CRD-C 513 Specification for Rubber Waterstop.

b. CE CRD-C 572 Specification for Polyvinyl-Chloride Waterstops.

5. United States Department of Commerce, National Institute of Standards and Technology; Product Standards (PS):

a. PS-1 U.S. Product Standard for Construction and Industrial Plywood.

B. Concrete Testing Service:

1. Materials and installed work may require testing and retesting, as directed by the Engineer, at any time during progress of work. Contractor shall retain an independent testing laboratory to perform testing.

1.03 SUBMITTALS

A. Product Data: Submit product data for proprietary materials and items, including reinforcement and forming accessories, admixtures, patching compounds, waterstops, joint systems, curing compounds, cementitious waterproofing, and others as requested by the Engineer.

B. Shop Drawings, Reinforcement: Submit shop drawings for fabrication, bending, and placement of concrete reinforcement. Conform to ACI 315, showing bar schedules, stirrup spacing, diagrams of bent bars, arrangement of concrete reinforcement. Include special reinforcement required and formed openings through concrete structures.

C. Laboratory Test Reports: Submit copies of laboratory test reports for concrete materials and mix design test as specified.

D. Material Certificates: It is preferable to provide copies of materials certificates in lieu of materials laboratory test reports when permitted by the Engineer. Material certificates shall be signed by

manufacturer and Contractor, certifying that each material item complies with, or exceeds, specified requirements.

PART 2 - PRODUCTS

2.01 FORM MATERIALS

A.. The design and removal of all formwork is solely the responsibility of the Contractor.

B. Forms for Exposed Finish Concrete: Unless otherwise indicated, construct formwork, for exposed concrete surfaces with plywood, metal, metal-framed plywood faced or other acceptable panel-type materials, to provide continuous, straight, smooth, exposed surfaces. Cardboard tube forms are not acceptable. Furnish in largest practicable sizes to minimize number of joints. Provide form material with sufficient thickness to withstand pressure of newly-placed concrete without bow or deflection.

1. Use medium density overlay (MDO) plywood conforming to PS-1 M.D. Overlay, Group 1, Exterior Grade.

C. Forms for Unexposed Finish Concrete: Form concrete surfaces which will be unexposed in finished structure with plywood, lumber, metal or other acceptable material. Provide lumber dressed on at least 2 edges and one side for tight fit.

D. Form Release Agent: Provide commercial formulation form release agent with a maximum of 350 mg/l volatile organic compounds (VOCs) that will not bond with, stain, or adversely affect concrete surfaces, and will not impair subsequent treatments of concrete surfaces.

E. Form Ties: Use factory-fabricated, adjustable-length, removable or snapoff metal form ties, designed to prevent form deflection, and to prevent spalling concrete surfaces upon removal.

1. Unless otherwise indicated and except as noted, provide ties so portion remaining within concrete after removal is 1-1/2 inches inside concrete and will not leave holes larger than 1 inch diameter in concrete surface.

2.02 REINFORCING MATERIALS

A. Reinforcing Bars: ASTM A 615, Grade 60, deformed.

B. Steel Wire: ASTM A 82, plain, cold-drawn steel.

C. Welded Wire Fabric: ASTM A 185, welded steel wire fabric.

D. Supports for Reinforcement: Provide supports for reinforcement including bolsters, chairs, spacers and other devices for spacing, supporting and fastening reinforcing bars and welded wire fabric in place. Use wire bar type supports conforming to CRSI Specifications, unless otherwise acceptable.

1. For slabs-on-grade, use supports with sand plates or horizontal runners where base material will not support chair legs.

2. For exposed-to-view concrete surfaces, where legs of supports are in contact with forms, provide supports with legs which are plastic protected (CRSI, Class 1) or stainless steel protected (CRSI, Class 2).

3. Where underside of lintels are exposed, bars shall be suspended such that chairs which cause spalling are not used.

2.03 CONCRETE MATERIALS

A. General:

1. Portland Cement: ASTM C 150, Type I or II.

2. Aggregates: ASTM C 33, except as modified herein. Furnish aggregates for exposed concrete surfaces from one source. Aggregates shall not contain any substance which may be deleteriously reactive with the alkalies in the cement.

3. Water: Potable, or free from foreign material in amounts harmful to concrete and embedded steel.

4. Admixtures: Provide admixtures for concrete that contain not more than 0.1-percent of chloride ions.

5. Slag, Fly Ash, and Other Pozzolanic Materials: ASTM C 618, Type C or Type F.

6. The materials used in concrete shall contain no hardened lumps, crusts, or frozen matter and shall not be contaminated with dissimilar material.

B. Types of Cement: Unless a specific type of cement is designated elsewhere, cement used in concrete shall be Type I, Type IP, Type IS, Type IP(MS), Type II, or Type III.

C. Fly Ash, Slag, and Other Pozzolanic Materials: Fly ash, slag, or other pozzolanic materials may be used as a cement replacement or as an admixture in concrete when Type I, Type II, or Type III cement is used.

D. Mixing Different Coarse Aggregates: Substitution of aggregate of the same type and grade from a different source in an approved concrete mix may be permitted at the discretion of the Engineer.

E. Admixtures:

1. Air Entraining Admixture: ASTM C 260.

2. Water Reducing Admixture: ASTM C 494, Type A, and contain not more than 0.1 percent chloride ions.

3. High Range Water Reducing Admixture (Superplasticizer): ASTM D 495, Type D, and contain not more than 0.1 percent chloride ions.

4. Water Reducing Non-Chloride Accelerator Admixture: ASTM C 494, Type D, and contain not more than 0.1 percent chloride ions.

5. Water Reducing Retarding Admixture: ASTM C 494, Type D, and contain not more than 0.1 percent chloride ions.

6. Chemical admixtures or additives containing calcium chloride shall not be permitted. Provide admixture manufacturer's written certification that chloride ion content is zero percent.

2.04 RELATED MATERIALS

A. Waterstops: Provide flat, dumbbell type or centerbulb type waterstops at construction joints and other joints as indicated. Size to suit joints. Provide either rubber or PVC waterstops as follows:

1. Rubber Waterstops: CE CRD-C 513.

a. Products: Provide rubber waterstops by one of the following:

(1) The Burke Co.
(2) Progress Unlimited.
(3) Williams Products, Inc.

2. Polyvinyl Chloride Waterstops: CE CRD-C 572.

a. Products: Provide polyvinyl chloride waterstops by one of the following:

(1) Afco Products.
(2) The Burke Co.
(3) W.R. Meadows, Inc.
(4) Progress Unlimited.
(5) Vinylex Corp.

B. Nonshrink, Nonmetallic Grout: Factory packaged nonstaining grout conforming to ASTM C 1107. Provide grout specifically recommended by manufacturer for interior and exterior applications.

1. Products: Provide one of the following products:

a. "Euco-NS"; Euclid Chemical Co.

b. "Vibropruf #11"; Lambert Corp.

c. "Masterflow 928"; Master Builders Technologies, Inc.

d. "Sonogrout 14"; Sonneborn Building Products-Chemrex Inc.

C. Hardener/Sealer/Dustproofer: (Apply to all floor surfaces not receiving floor covering)

1. Products: Provide one of the following products:

a. "Burk-O-Lith"; The Burke Co.

b. "Surfhard"; Euclid Chemical Co.

c. "Saniseal"; Master Builders Technologies, Inc.

d. "Lapidolith"; Sonneborn Building Products-Chemrex, Inc.

D. Sealer for Form-Lined Concrete and Adjacent Vertical Concrete: Colorless, proprietary solution for sealing concrete surfaces.

1. Product: "Clear Pruf"; The Burke Co.

E. Absorptive Cover: Burlap cloth made from jute or kenaf, weighing approximately 9 oz./sq. yd., conforming to AASHTO M 182, Class 2.

F. Moisture-Retaining Cover: One of the following, complying with ASTM C 171.

1. Waterproof paper.

2. Polyethylene film.

3. Polyethylene-coated burlap.

G. Liquid Membrane Forming Curing Compound: Liquid type membrane-forming curing compound conforming to ASTM C 309, Type 1-D. Moisture loss not more than 0.55 gr./sq. cm. when applied at 200 sq. ft./gal. Compound to be clear and colorless at time of application and not change to a yellow or amber color over time and exposure.

1. Products: Provide one of the following products:

    a. "Clear Seal"; Tamms Div., LaPorte Construction Chemicals.

    b. "Masterkure 200W"; Master Builders Technologies, Inc.

    c. "Klearseal"; Setcon Industries.

    d. "Kure-N-Seal"; Sonneborn Building Products-Chemrex, Inc.

H. Bonding Compound: ASTM C 1059. Where concrete placement will be protected (interior) or delayed, use rewettable Type 1 bonding agent. Where concrete will be placed immediately after application of bonding agent, use non-rewettable acrylic Type II.

1. Products, Rewettable Type: Provide one of the following products:

    a. "Euco Weld"; Euclid Chemical Co.

    b. "Hibond"; Lambert Corp.

    c. "Everweld"; L&M Construction Chemicals, Inc.

2. Products, Non-Rewettable Type: Provide one of the following products:

    a. "Acrylic Bondcrete"; The Burke Co.

    b. "SBR Latex"; Euclid Chemical Co.

    c. "Acrylbond"; Lambert Corp.

    d. "Sonocrete"; Sonneborn Building Products-Chemrex, Inc.

I. Epoxy Adhesive: ASTM C 881, Type IV, two component 100 percent solids material suitable for use on dry or damp surfaces. Provide material grade and class to suit project requirements.

1. Products: Provide one of the following products:

    a. "Burke Epoxy M.V."; The Burke Co.

    b. "Euco Epoxy System #452 or #620"; Euclid Chemical Co.

    c. "Sikadur 32 Hi-Mod"; Sika Chemical Corp.

J. Joint Filler Material: Preformed strips of asphalt saturated fiberboard, conforming to ASTM D 1751.

2.05 PROPORTIONING AND DESIGN OF MIXES

A. Prepare design mixes for each type and strength of concrete by either laboratory trial batch or field experience methods as specified in ACI 301. For the trial batch method, use an independent testing agency acceptable to Engineer for preparing and reporting proposed mix designs.

1. Do not use the same testing agency for field quality control testing.

2. Limit use of fly ash to not exceed 20 percent of cement content by weight.

B. Submit written reports to the Engineer of each proposed mix for each class of concrete at least 15 days prior to start of work. Do not begin concrete production until mixes have been reviewed by the Engineer.

C. Design mixes to provide normal weight concrete as indicated on Drawings. Maximum w/c ratio shall be as specified in ACI 301.

D. Slump Limits: proportion and design mixes to result in concrete slump at point of placement as follows:

1. Ramps, slabs, and sloping surfaces: Not more than 3-inches.

2. Reinforced foundation systems: Not less than 1-inch and not more than 3-inches.

3. Concrete containing high-range water-reducing admixture (superplasticizer): Not more than 8-inches after adding admixture to site-verified 2-to3-inch slump concrete.

4. Other concrete: Not more than 6-inches.

E. Adjustment to Concrete Mixes: Mix design adjustments may be requested by Contractor when characteristics of materials, job conditions, weather, test results, or other circumstances warrant; as accepted by the Engineer. Laboratory test data for revised mix design and strength results must be submitted to and accepted by the Engineer before using in work.

2.06 ADMIXTURES

A. Use water reducing admixture of high range water reducing admixture (super plasticizer) in concrete as required for placement and workability.

B. Use accelerating admixture in concrete slabs placed at ambient temperatures below 50-degrees F.

C. Use high-range water-reducing admixture in pumped concrete, heavy-use slabs, architectural concrete, concrete required to be watertight, and concrete with water-cement ratios below 0.50.

D. Use air-entraining admixture in exterior exposed concrete unless otherwise indicated. Add air-entraining admixture at manufacturer's prescribed rate to result in concrete at point of placement having total air content with a tolerance of plus or minus 1-1/2 percent within the following limits:

1. Concrete not exposed to freezing, thawing, or hydraulic pressure, or to receive a surface hardener: 2 percent to 4 percent air.

E. Use admixtures for waterproofing, water reduction and set accelerating or retarding in strict compliance with manufacturer's directions.

PART 3 - EXECUTION

3.01 FORMS

A. The Contractor shall be solely responsible to design, erect, support, shore, reshore, brace and maintain formwork to support vertical and lateral loads that might be applied until such loads can be supported by concrete structure. Construct form-work so concrete members and structures are of correct size, shape, alignment, elevation and position. Maintain formwork construction tolerances conforming to ACI 347.

B. Design formwork to be readily removable without impact, shock or damage to cast-in-place concrete surfaces and adjacent materials.

C. Construct forms to sizes, shapes, lines, and dimensions shown, and to obtain accurate alignment, location, grades, level and plumb work in finished structures. Provide for openings, offsets, sinkages, keyways, recesses, moldings, rustications, reglets, chamfers, blocking, screeds, bulkheads, anchorages and inserts, and other features required in work. Use selected materials to obtain required finishes. Solidly butt joints and provide backup at joints to prevent leakage of cement paste.

D. Fabricate forms for easy removal without hammering or prying against concrete surfaces. Provide crush plates or wrecking plates where stripping may damage cast concrete surfaces. Provide top forms for inclined surfaces where slope is too steep to place concrete with bottom forms only. Kerf wood inserts for forming keyways, reglets, recesses, rustications, and the like, to prevent swelling and for easy removal.

E. Provide temporary openings where interior area of formwork is inaccessible for cleanout, for inspection before concrete placement, and for placement of concrete. Securely brace temporary openings and set tightly to forms to prevent loss of concrete mortar matrix. Locate temporary openings on forms at inconspicuous locations.

F. Chamfer exposed corners and edges 3/4 inch unless otherwise indicated, using wood, metal, PVC or rubber chamfer strips fabricated to produce uniform smooth lines and tight edge joints.

G. Provisions for Other Trades: Provide openings in concrete formwork to accommodate work of other trades. Determine size and location of openings, recesses and chases from trades providing such items. Accurately place and securely support items built into forms.

H. Cleaning and Tightening: Thoroughly clean forms and adjacent surfaces to receive concrete. Remove chips, wood, sawdust, dirt or other debris just before concrete is placed. Retighten forms and bracing after concrete placement as required to eliminate mortar leaks and maintain proper alignment.

3.02 PLACING REINFORCEMENT

A. Comply with CRSI's recommended practice for "Placing Reinforcing Bars", for details and methods of reinforcement placement and supports, and as herein specified.

B. Clean reinforcement of loose rust and mill scale, earth, and other materials which reduce or destroy bond with concrete.

C. Accurately position, support and secure reinforcement against displacement by formwork, construction, or concrete placement operations. Locate and support reinforcing by metal chairs, runners, bolsters, spacers, and hangers, as required.

D. Place reinforcement as called for on Drawings. Arrange, space and securely tie bars and bar supports to hold reinforcement in position during concrete placement operations. Set wire ties so ends are directed into concrete, not toward exposed concrete surfaces.

E. Install welded wire fabric in as long lengths as practicable. Lap adjoining pieces at least one full mesh and lace splices with wire. Offset end laps in adjacent widths to prevent continuous laps in either direction.

3.03 JOINTS

A. Construction Joints: Locate and install construction joints, as indicated, or, if not indicated, locate so as not to impair strength and appearance of the structure, as acceptable to the Engineer.

B. Waterstops: Provide waterstops in construction joints as indicated. Install waterstops to form continuous diaphragm in each joint. Make provisions to support and protect exposed waterstops during progress of work. Fabricate field joints in waterstops pursuant to manufacturer's published instructions.

1. Waterstops shall be securely held in position using split form dimensional lumber to hold waterstop rigidly within the casting to a true linear profile. Concrete shall be properly consolidated around the waterstop so that no voids or honeycombing occurs adjacent to the waterstop, thus maintaining sealing integrity. The Contractor shall remove all concrete spillage from the waterstop upon completion of the days concrete pour.

C. Isolation Joints in Slabs-On-Ground: Construct isolation joints in slabs-on-ground at points of contact between slabs on ground and vertical surfaces, such as column pedestals, foundation walls, grade beams and elsewhere as indicated. Construct isolation joints using joint filler material herein specified and sealant materials specified in Section 07920 - JOINT SEALANTS. Maintain top of strips of filler material at 1/4 inch + (maximum) below top of finish slab.

3.04 INSTALLATION OF EMBEDDED ITEMS

A. General: Set and build into work anchorage devices and other embedded items required for other work that is attached to, or supported by, cast-in-place concrete. Use setting drawings, diagrams, instructions and directions provided by suppliers of items to be attached thereto.

B. Edge Forms and Screed Strips for Slabs: Set edge forms or bulkheads and intermediate screed strips for slabs to obtain required elevations and contours in finished slab surface. Provide and secure units sufficiently strong to support types of screed strips by use of strike-off templates or accepted compacting type screeds.

3.05 PREPARATION OF FORM SURFACES

A. Clean re-used forms of concrete matrix residue, repair and patch as required to return forms to acceptable surface condition.

B. Coat contact surfaces of forms with a form-coating compound before concrete is placed.

C. Thin form-coating compounds only with thinning agent of type, and in amount, and under conditions pursuant to form-coating compound manufacturer's published instructions. Do not allow excess form-coating material to accumulate in forms or to come into contact with in-place concrete surfaces against which fresh concrete will be placed. Apply pursuant to manufacturer's published instructions.

D. Coat steel forms with a non-staining, rust-preventative form oil or otherwise protect against rusting. Rust-stained steel formwork is not acceptable.

3.06 CONCRETE PLACEMENT

A. Preplacement Inspection: Before placing concrete, inspect and complete formwork installation, reinforcing steel, and items to be embedded or cast-in. Notify other trades sufficiently in advance, to permit installation of their work; cooperate with other trades in setting such work. All aforementioned work must be completed and the Engineer and/or Owner notified at least 24 hours prior to concrete placement to allow time for adequate inspection. Moisten wood forms immediately before placing concrete where form coating is not used.

1. Coordinate the installation of joint materials and moisture barriers with placement of forms and reinforcing steel.

B. General: Conform to ACI 304 and as specified.

1. Deposit concrete continuously or in layers of such thickness that no concrete will be placed on concrete which has hardened sufficiently to cause the formation of seams or planes of weakness. If a section cannot be placed continuously, provide construction joints as herein specified. Deposit concrete as nearly as practicable to its final location to avoid segregation.

2. Concrete shall NOT drop freely from a height greater than 5-feet.

C. Placing Concrete in Forms: Deposit concrete in forms in horizontal layers not deeper than 24 inches and in a manner to avoid inclined construction joints. Where placement consists of several layers, place each layer while preceding layer is still plastic to avoid cold joints.

1. Cold joints will not be allowed except as approved by the Engineer.

2. Consolidate placed concrete by mechanical vibrating equipment supplemented by hand-spading, rodding or tamping. Use equipment and procedures for consolidation of concrete pursuant to ACI recommended practices.

3. Do not use vibrators to transport concrete inside forms. Insert and withdraw vibrators vertically at uniformly spaced locations not farther than visible effectiveness of machine. Place vibrators to rapidly penetrate placed layer and at least 6 inches into preceding layer. Do not insert vibrators into lower layers of concrete that have begun to set. At each insertion limit duration of vibration to time necessary to consolidate concrete and complete embedment of reinforcement and other embedded items without causing segregation of mix.

D. Placing Concrete Slabs: Deposit and consolidate concrete slabs in a continuous operation, within limits of construction joints, until the placing of a panel or section is completed.

1. Consolidate concrete during placing operations so that concrete is thoroughly worked around reinforcement and other embedded items and into corners.

2. Bring slab surfaces to correct level with straightedge and strike off. Use bull floats or darbies to smooth surface, free of humps or hollows. Do not disturb slab surfaces prior to beginning finishing operations.

3. Maintain reinforcing in proper position during concrete placement operations.

E. Cold Weather Placement: Comply with provisions of ACI 306 and as follows. Protect concrete work from physical damage or reduced strength that could be caused by frost, freezing actions, or low temperatures.

1. When air temperature has fallen to or is expected to fall below 40 degrees F., uniformly heat water and aggregates before mixing to obtain a concrete mixture temperature of not less than 50 degrees F and not more than 80 degrees F at point of placement.

2. Do not use frozen materials or materials containing ice or snow. Do not place concrete on frozen subgrade or on subgrade containing frozen materials.

3. Do not use salt or other materials containing antifreeze agents or chemical accelerators unless otherwise accepted in mix designs. Do not use calcium chloride.

F. Hot Weather Placement: When hot weather conditions exist that would impair quality and strength of concrete, place concrete complying with ACI 305 or as specified in Section 2.05 (H).

1. Cover reinforcing steel with water-soaked burlap if it becomes too hot, so that steel temperature will not exceed the ambient air temperature immediately before embedding in concrete.

2. Fog spray forms, reinforcing steel, and subgrade just before placing concrete.

3. Use water-reducing retarding admixture when required by high temperatures, low humidity, or other adverse placing conditions, as acceptable to Engineer.

3.07 FINISH OF FORMED SURFACES

A. Rough Form Finish: For formed concrete surfaces not exposed-to-view in the finish work or by other construction, unless otherwise indicated. This is the concrete surface having texture imparted by form facing material used, with tie holes and defective areas repaired and patched and fins and other projections exceeding 1/4 inch in height rubbed down or chipped off.

B. Smooth Formed Finish: Provide a smooth form finish on formed concrete surfaces exposed to view or to be covered with a coating materials applied directly to concrete, or a covering material applied directly to concrete, such as waterproofing, dampproofing, painting, or another similar system. This is an as-cast concrete surface obtained with selected form-facing material, arranged in an orderly and symmetrical manner with a minimum of seams. Repair and patch defective areas with fins and other projections completely removed and smoothed.

C. Related Unformed Surfaces: At tops of walls, horizontal offsets, and similar unformed surfaces occurring adjacent to formed surfaces, strike-off smooth and finish with a texture matching adjacent formed surfaces. Continue final surface treatment of formed surfaces uniformly across adjacent unformed surfaces, unless otherwise indicated.

3.08 MONOLITHIC SLAB FINISHES

A. Float Finish: Apply float finish to monolithic slab surfaces to receive trowel finish and other finishes as hereinafter specified.

1. After screeding, consolidating, and leveling concrete slabs, do not work surface until ready for floating. Begin floating when surface water has disappeared or when concrete has stiffened sufficiently to permit operation of power-driven floats, or both. Consolidate surface with power-driven floats, or by hand-floating if area is small or inaccessible to power units. Check

and level surface plane so that depressions between high spots do not exceed 1/4 inch under a 10 foot straight edge. Cut down high spots and fill low spots. Uniformly slope surfaces to drains. Immediately after leveling, refloat surface to a uniform, smooth, granular texture.

B. Trowel Finish: Apply trowel finish to monolithic slab surfaces to be exposed-to-view, and slab surfaces to be covered with resilient flooring, carpet, paint, tile, or other thin-film finish coating system.

1. After floating, begin first trowel finish operation using a power-driven trowel. Begin final troweling when surface produces a ringing sound as trowel is moved over surface.

2. Consolidate concrete surface by final hand-troweling operation, free of trowel marks, uniform in texture and appearance and with a level surface plane so that depressions between high spots do not exceed 1/8 inch under a 10 foot straightedge. Grind smooth surface defects which would telegraph through applied floor covering system.

C. Trowel and Fine Broom Finish:

1. Where ceramic tile and marble flooring are to be installed with a thin-set mortar, apply trowel finish as specified, then immediately follow with fine brooming to create a slightly scarified surface.

D. Non-Slip Broom Finish: Apply non-slip broom finish to exterior concrete flatwork, steps and ramps, and elsewhere as indicated.

1. Immediately after trowel finishing, slightly roughen concrete surface by brooming with fiber bristle broom perpendicular to main traffic route. Coordinate required final finish with the Engineer before application.

3.09 CONCRETE CURING AND PROTECTION

A. General: Protect freshly placed concrete from premature drying and excessive cold or hot temperatures.

1. Start initial curing as soon as free water has disappeared from concrete surface after placing and finishing. Weather permitting, keep continuously moist for not less than 7 days.

2. Begin final curing procedures immediately following initial curing and before concrete has dried. Continue final curing for at least 7 days pursuant to ACI 301 procedures. Avoid rapid drying at end of final curing period.

B. Curing Methods: Perform curing of concrete by curing compound, by moist curing, by moisture-retaining cover curing, and by combinations thereof, as herein specified.

1. Provide moisture curing by following methods:

a. Keep concrete surface continuously wet by covering with water.

b. Continuous water-fog spray.

c. Covering concrete, surface with specified absorptive cover, thoroughly saturating cover with water and keeping continuously wet. Place absorptive cover to provide coverage of concrete surfaces and edges, with 4 inch lap over adjacent absorptive covers.

2. Provide moisture-cover curing as follows:

a. Cover concrete surfaces with moisture-retaining cover for curing concrete, placed in widest practicable width with sides and ends lapped at least 3 inches and sealed by waterproof tape or adhesive. Immediately repair any holes or tears during curing period using cover material and waterproof tape.

C. Curing Formed Surfaces: Cure formed concrete surfaces, including undersides of beams, supported slabs and other similar surfaces by moist curing with forms in place for full curing period or until forms are removed. If forms are removed, continue curing by methods specified above, as applicable.

D. Curing Unformed Surfaces: Cure unformed surfaces, such as slabs, floor topping, and other flat surfaces by application of appropriate curing method.

1. Final cure concrete surfaces to receive liquid floor sealer/dustproofer/hardener or finish flooring by use of moisture-retaining cover, unless otherwise directed.

2. Provide curing compound to exposed interior slabs and to exterior slabs, walks, and curbs; as follows:

a. Apply specified curing compound to concrete slabs as soon as final finishing operations are complete (within 2-hours). Apply uniformly in continuous operation by power-spray or roller in accordance with manufacturer's directions. Re-coat areas subjected to heavy rainfall within 3-hours after initial application. Maintain continuity of coating and repair damage during curing period.

b. Do not use membrane curing compounds or a sealer on surfaces which are to be covered with coating material applied directly to concrete such as liquid floor hardener, waterproofing, dampproofing, membrane roofing, flooring (such as ceramic tile, marble flooring, glue-down carpet), painting, and other coatings and finish materials, unless otherwise acceptable to the Engineer.

3.10 SHORES AND SUPPORTS

A. Conform to ACI 347 for shoring and reshoring.

B. Extend shoring from ground to roof.

C. Remove shores and reshore in a planned sequence to avoid damage to partially cured concrete. Locate and provide adequate reshoring to safely support work without excessive stress or deflection.

D. Keep reshores in place a minimum of 15 days after concrete placement, and longer if required, until concrete has attained its required 28-day strength and heavy loads due to construction operations have been removed.

3.11 REMOVAL OF FORMS

A. Formwork not supporting weight of concrete, such as sides of beams, wall, columns, and similar parts of the work, may be removed, provided concrete is sufficiently hard to not be damaged by form removal operations, and provided curing and protection operations are maintained.

B. Formwork supporting weight of concrete, such as beam soffits, joints, slabs and other structural elements, may not be removed in less than 14 days and until concrete has attained design minimum compressive strength at 28 days. Determine potential compressive strength of in-place concrete by testing field-cured specimens representative of concrete location or members.

3.12 RE-USE OF FORMS

A. Clean and repair surfaces of forms to be re-used in work. Split, frayed, delaminated or otherwise damaged form facing material will not be acceptable for exposed surfaces. Apply new form coating compound as specified for new formwork.

B. When forms are extended for successive concrete placement, thoroughly clean surfaces, remove fins and laitance, and tighten forms to close joints. Align and secure joint to avoid offsets. Do not use "patched" forms for exposed concrete surfaces, except as acceptable to the Engineer.

3.13 MISCELLANEOUS CONCRETE ITEMS

A. Filling-in: Fill in holes and openings left in concrete structures for passage of work by other trades, unless otherwise shown or directed, after work of other trades is in place. Mix, place and cure concrete as herein specified, to blend with in-place construction. Provide other miscellaneous concrete filling shown or required to complete work.

B. Equipment Bases and Foundations: Provide machine and equipment bases and foundations. Set anchor bolts for machines and equipment to template at correct elevations, complying with certified diagrams or templates of manufacturer furnishing machines and equipment.

1. Grout base plates and foundations, using specified non-shrink grout. Use non-metallic grout for exposed conditions, unless otherwise indicated.

3.14 CONCRETE SURFACE REPAIRS

A. Patching Defective Areas: Repair and patch defective areas with cement mortar immediately after removal of forms, when acceptable to the Engineer.

1. Cut out honeycomb, rock pockets, voids over 1/4 inch in any dimension, down to solid concrete but, in no case to a depth of less than 1 inch. Make edges of cuts perpendicular to the concrete surface. Thoroughly clean, dampen with water and brush-coat the area to be patched with specified bonding agent. Place patching mortar after bonding compound has dried.

2. Patch holes left by tie rods and bolts with a mixture of sand and cement which, after curing, closely matches the appearance of the surrounding wall surface.

B. Repair of Formed Surfaces: Remove and replace concrete having defective surfaces if defects cannot be repaired to satisfaction of the Engineer. Surface defects, as such, include color and texture irregularities, cracks, spalls, air bubbles, honeycomb, rock pockets; fins and other projections on surface; and stains and other discolorations that cannot be removed by cleaning. Flush out form tie holes, fill with dry pack mortar, or precast cement cone plugs secured in place with bonding agent.

1. Repair concealed formed surfaces, where possible, that contain defects that affect the durability of concrete. If defects cannot be repaired, remove and replace concrete.

C. Repair of Unformed Surfaces: Test unformed surfaces, such as monolithic slabs, for smoothness and verify the surface plane to tolerance specified for each surface and finish. Correct low and high areas as herein specified. Test unformed surfaces sloped to drain for trueness of slope, in addition to smoothness, using a template having required slope.

1. Repair finished unformed surfaces that contain defects which affect durability of concrete. Surface defects, as such, include crazing, cracks in excess of 0.01 inch wide or which penetrate to reinforcement or completely through non-reinforced sections regardless of width, spalling, pop-outs, honeycomb, rock pockets, and other objectionable conditions.

2. Correct high areas in unformed surfaces by grinding, after concrete has cured at least 14 days.

3. Correct low areas in unformed surfaces during or immediately after completion of surface finishing operations by cutting out low areas and replacing with fresh concrete. Finish repaired areas to blend into adjacent concrete. Proprietary patching compounds may be used when acceptable to the Engineer.

D. Repair defective areas, except random cracks and single holes not exceeding 1 inch diameter, by cutting out and replacing with fresh concrete. Remove defective areas to sound concrete with clean, square cuts and expose reinforcing steel with at least 3/4 inch clearance all around. Dampen concrete surfaces in contact with patching concrete and apply bonding compound. Mix patching concrete of same materials to provide concrete of same type of class as original concrete. Place,

compact and finish to blend with adjacent finished concrete. Cure in same manner as adjacent concrete.

E. Repair isolated random cracks and single holes not over 1 inch in diameter by dry-pack method. Groove top of cracks and cut-out holes to sound concrete and clean of dust, dirt and loose particles. Dampen cleaned concrete surfaces and apply bonding compound. Mix dry-pack, consisting of one part portland cement to 2-1/2 parts fine aggregate passing a No. 16 mesh sieve, using only enough water as required for handling and placing. Place dry pack after bonding compound has dried. Compact dry-pack mixture in place and finish to match adjacent concrete. Keep patched area continuously moist for not less than 72 hours.

F. Perform structural repairs with prior approval by the Engineer for method and procedure, using specified epoxy adhesive and mortar.

G. Repair methods not specified above may be used, subject to acceptance of the Engineer.

3.15 QUALITY CONTROL TESTING DURING CONSTRUCTION

A. The Contractor shall employ a testing laboratory to perform tests and to submit test reports.

B. Sampling and testing for quality control during placement of concrete may include the following, as directed by the Engineer.

1. Sampling Fresh Concrete: ASTM C 172, except modified for slump to comply with ASTM C 94.

   a. Slump: ASTM C 143; one test at point of discharge for each day's pour of each type of concrete; additional tests when concrete consistency seems to have changed.
   b. Air Content: ASTM C 173, volumetric method for lightweight or normal weight concrete; ASTM C 231 pressure method for normal weight concrete; one for each day's pour of each type of air-entrained concrete.

   c. Concrete Temperature: Test hourly when air temperature is 40 deg. F. and below, and when 80 deg. F. and above; and each time a set of compression test specimens is made.

   d. Compression Test Specimen: ASTM C 31; one set of four standard cylinders for each compressive strength test, unless otherwise directed. Mold and store cylinders for laboratory cured test specimens except when field cure test specimens are required.

   e. Compressive Strength Tests: ASTM C 39; one set for each day's pour plus additional set for each 100 cu. yds. over and above the first 25 cu. yds. of each concrete class placed in any one day; one specimen tested at 7 days, two specimens tested at 28 days, and one specimen retained in reserve for later testing if required.

2. When frequency of testing will provide less than five strength tests for a given class of concrete, conduct testing from at least five randomly selected batches or from each batch if fewer than five are used.

3. When total quantity of a given class of concrete is less than 50 cu. yds., Engineer may waive strength test if adequate evidence of satisfactory strength is provided.

4. When strength of field-cured cylinders is less than 85% of companion laboratory-cured cylinders, evaluate current operations and provide corrective procedures for protecting and curing the in-place concrete.

5. Strength level of concrete will be considered satisfactory if averages of sets of three consecutive strength test results equal or exceed specified compressive strength, and no individual strength test result falls below specified compressive strength by more than 500 psi.

C. Test results will be reported in writing to the Engineer, ready-mix producer, and Contractor within 24 hours that tests are made. Reports of compressive strength tests shall contain the project identification name and number, date of concrete placement, name of concrete testing service, concrete type and class, location of concrete batch in structure, design compressive strength at 28 days, concrete mix proportions and materials; compressive breaking strength and type of break for both 7-day test and 28-day tests.

D. Nondestructive Testing: Impact hammer, sonoscope, or other nondestructive device may be permitted but shall not be used as the sole basis for acceptance or rejection.

E. Additional Tests: The testing service will make additional tests of in-place concrete when test results indicate specified concrete strengths and other characteristics have not been attained in the structure, as directed by the Engineer. Testing service may conduct tests to determine adequacy of concrete by cored cylinders complying with ASTM C 42, or by other methods as directed.

END OF SECTION 03310

SECTION 05120 - STRUCTURAL STEEL

PART 1 - GENERAL

1.01 SUMMARY

A. Extent of structural steel work is shown on the Drawings, including schedules, notes and details to show size and location of members, typical connections, and type of steel required.

B. Structural steel is that work defined in AISC "Code of Standard Practice for Steel Buildings and Bridges" and as otherwise shown on Drawings.

1.02 RELATED WORK

A. STEEL JOISTS: Section 05210.

B. METAL DECKING: Section 05300.

C. COLD FORMED METAL FRAMING: Section 05400.

D. METAL FABRICATIONS: Section 05500.

E. MANUFACTURED ROOF PANELS: Section 07411.

G. PAINTING: Section 09900.

1.03 QUALITY ASSURANCE

A. Codes and Standards: Comply with provisions of the following, unless otherwise indicated or specified:

1. American Institute of Steel Construction (AISC):

   a. AISC Code of Standard Practice for Steel Buildings and Bridges.

   b. AISC Specifications for the Design, Fabrication, and Erection of Structural Steel for Buildings, including "Commentary" and Supplements.

   c. AISC Specifications for Structural Joints using ASTM A 325 or A 490 Bolts; approved by the Research Council on Structural Connections (RCSC).

2. American Society for Testing and Materials (ASTM):

   a. Referenced Standards.

3. American Welding Society (AWS):

a. AWS D1.1 Structural Welding Code - Steel.

B. Qualifications for Welding Work: Comply with the following:

1. Qualify welding processes and welding operators in accordance with AWS "Standard Qualification Procedure."

2. Provide certification that welders to be employed in work have satisfactorily passed AWS qualification tests within previous twelve (12) months.

a. If re-certification of welders is required, re-testing will be Contractor's responsibility.

C. All structural steel work and material is subject to inspection and testing. The expense of removing and replacing any structural steel for testing purposes shall be borne by the Contractor if it is found to be unsatisfactory. Remove and replace work found to be defective and provide new acceptable work at no additional expense to the Owner.

1.04 SUBMITTALS

A. Shop Drawings: Submit shop drawings including complete details and schedules for fabrication and assembly of structural steel members procedures and diagrams.

1. Include details of cuts, connections, camber, holes, and other pertinent data. Indicate
welds by standard AWS symbols, and show size, length, and type of each weld.

2. Provide setting drawings, templates, and directions for installation of anchor bolts and other anchorages to be installed by others.

B. Product Data: Submit producer's or manufacturer's specifications and installation instructions for following products. Include laboratory test reports and other data to show compliance with specifications (including specified standards).

1. Structural steel (each type), including certified copies of mill reports covering chemical and physical properties.

2. High-strength bolts (each type), including nuts and washers.

3. Structural steel primer paint.

4. Shrinkage-resistant grout.

1.05 DELIVERY, STORAGE AND HANDLING

A. Deliver anchor bolts and anchorage devices, which are to be embedded in cast-in-place concrete or masonry, in ample time to not delay work.

B. Store materials to permit easy access for inspection and identification. Keep steel members off ground, using pallets, platforms, or other supports. Protect steel members

and packaged materials from corrosion and deterioration.

C. Do not store materials on structure in a manner that might cause distortion or damage to members or supporting structures. Repair or replace damaged materials or structures as directed, at no additional cost to the Owner.

PART 2 - PRODUCTS

2.01 MATERIALS

A. Metal Surfaces, General: For fabrication of work which will be exposed to view, use only materials which are smooth and free of surface blemishes including pitting, seam marks, roller marks, rolled trade names and roughness. Remove such blemishes by grinding, or by welding and grinding, prior to cleaning, treating and application of surface finishes.

B. Structural Steel Shapes: ASTM A 572, Grade 50.

C. Plates and Bars: ASTM A 36

D. Steel Pipe: ASTM A 53, Type E or S. Finish to be galvanized.

E. Structural Steel Tubes: ASTM A 500, Grade B.

F. Anchor Bolts: ASTM A 307, A325 or A 36, galvanized.

G. High-Strength Threaded Fasteners: Heavy hexagon structural bolts, heavy hexagon nuts, and hardened washers, as follows:

1. Quenched and tempered medium-carbon steel bolts, nuts and washers, complying with ASTM A 325.

H. Electrodes for Welding: Comply with AWS Code E70XX.

I. Structural Steel Primer Paint: Manufacturer's or fabricator's standard, fast-curing, lead-free, universal modified alkyd primer selected for good resistance to normal atmospheric corrosion, for compatibility with finish paint systems indicated, and for capability to provide a sound foundation for field-applied topcoats.

J. Non-Metallic Shrinkage-Resistant Grout: Comply with the following:

1. Pre-mixed, non-metallic, non-corrosive, non-staining product containing selected silica sands, portland cement, shrinkage compensating agents, plasticizing and water reducing agents, complying with ASTM C 1107, Type A.

2. Products: Subject to compliance with specified requirements, provide one of the following:

a. "Euco N.S."; Euclid Chemical Co.

b. "Crystex"; L&M Construction Chemicals, Inc.

c. "Masterflow 713"; Master Builders Technologies, Inc.

2.02 FABRICATION

A. Shop Fabrication and Assembly: Fabricate and assemble structural assemblies in shop to greatest extent possible. Fabricate items of structural steel in accordance with AISC Specifications and as indicated on approved shop drawings. Provide camber in structural members where indicated.

B. Splice members only where indicated and accepted on shop drawings.

C. Properly mark and match-mark materials for field assembly. Fabricate for delivery sequence which will expedite erection and minimize field handling of materials.

D. Where finishing is required, complete assembly, including welding of units, before start of finishing operations. Provide finish surfaces of members exposed in final structure free of markings, burrs, and other defects.

E. Welded Connections: All shop connections shall be seal welded for exposed structural steel.

1. Provide high-strength threaded fasteners for principal bolted connections.

F. Bolted Connection: Install high-strength threaded fasteners in accordance with AISC "Specifications for Structural Joints using ASTM A 325 or A 490 Bolts" (RCSC).

G. Welded Construction: Comply with AWS Code for procedures, appearance and quality of welds, and methods used in correcting welding work.

H. Assemble and weld built-up sections by methods which will produce true alignment of axes without warp.

I. Holes for Other Work: Provide holes required for securing other work to structural steel framing, and for passage of other work through steel framing members, as shown on approved shop drawings.

J. Provide threaded nuts welded to framing, and other specialty items as indicated to receive other work.

K. Cut, drill, or punch holes perpendicular to metal surfaces. Do not flame cut holes or enlarge holes by burning. Drill holes in bearing plates.

2.03 SHOP PAINTING

A. General: Comply with the following:

1. Shop paint structural steel, except those members or portions of members to be embedded in concrete or mortar. Paint embedded steel which is partially exposed on exposed portions and initial 2 inches of embedded areas only.

2. Do not paint surfaces which are to be welded or high-strength bolted with friction-

type connections.

3. Apply 2 coats of paint to surfaces which are inaccessible after assembly or erection. Change color of second coat to distinguish it from the first.

B. Surface Preparation: After inspection and before shipping, clean steel work to be painted. Remove loose rust, loose mill scale, and spatter, slag or flux deposits. Clean steel in accordance with Steel Structures Painting Council (SSPC) as follows:

1. SP-2 "Hand Tool Cleaning;" or

2. SP-3 "Power Tool Cleaning."

C. Painting: Comply with the following:

1. Immediately after surface preparation, apply structural steel primer paint in accordance with manufacturer's instructions and at a rate to provide dry film thickness of not less than 2.0 mils. Use painting methods which result in full coverage of joints, corners, edges, and exposed surfaces.

2. Primer shall be compatible with finish coat paint products specified in Section 09900 - PAINTING for structural steel indicated or scheduled to be finish painted.

PART 3 - EXECUTION

3.01 ERECTION

A. Temporary Shoring and Bracing: Provide temporary shoring and bracing members with connections of sufficient strength to bear imposed loads. Remove temporary members and connections when permanent members are in place and final connections are made. Provide temporary guy lines to achieve proper alignment of structures as erection proceeds. Provide temporary planking and working platforms as necessary to effectively complete work.

B. Anchor Bolts: Furnish anchor bolts and other connectors required for securing structural steel to foundations and other in-place work.

C. Furnish templates and other devices as necessary for presetting bolts and other anchors to accurate locations.

D. Setting Bases and Bearing Plates: Clean concrete and masonry bearing surfaces of bond-reducing materials and roughen to improve bond to surfaces. Clean bottom surface of base and bearing plates.

E. Set loose and attached base plates and bearing plates for structural members on wedges or other adjusting devices.

F. Tighten anchor bolts after supported members have been positioned and plumbed. Do not remove wedges or shims, but if protruding, cut off flush with edge of base or bearing plate prior to packing with grout.

G. Pack grout solidly between bearing surfaces and bases or plates to ensure that no voids remain. Finish exposed surfaces, protect installed materials, and allow to cure.

1. For proprietary grout materials, comply with manufacturer's published instructions.

H. Field Assembly: Set structural frames accurately to lines and elevations indicated. Align and adjust various members forming part of complete frame or structure before permanently fastening. Clean bearing surfaces and other surfaces which will be in permanent contact before assembly. Perform necessary adjustments to compensate for discrepancies in elevations and alignment.

I. Level and plumb individual members of structure within specified AISC tolerances.

J. Establish required leveling and plumbing measurements on mean operating temperature of structure. Make allowances for difference between temperature at time of erection and mean temperature at which structure will be when completed and in service.

K. Splice members only where indicated and accepted on shop drawings.

L. Comply with AISC Specifications for bearing, adequacy of temporary connections, alignment, and removal of paint on surfaces adjacent to field welds.

M. Do not enlarge unfair holes in members by burning or by use of drift pins, except in secondary bracing members. Ream holes that must be enlarged to admit bolts only after notification and acceptance by the Engineer.

N. Gas Cutting: Do not use gas cutting torches in field for correcting fabrication errors in primary structural framing. Cutting will be permitted only on secondary members which are not under stress, as acceptable to Engineer. Finish gas-cut sections equal to a sheared appearance when permitted.

O. Touch-Up Painting:

1. Immediately after erection, clean field welds, bolted connections, and abraded areas of shop paint. Apply paint to exposed areas using same material as used for shop painting.

2. Apply by brush or spray to provide minimum dry film thickness of 2.0 mils.

3.02 FIELD QUALITY CONTROL

A. The Owner will engage an independent testing and inspection agency to visually inspect all of the high-strength bolted connections and welded connections and to perform tests and prepare test reports.

1. Perform a magnetic particle test on 25 percent of all fillet and full penetration welds. If more than 20 percent of welds made by a welder contain defects identified by testing, then all welds made by that welder shall be tested at Contractor's expense.

2. Provide a minimum ten (10) day notice to the testing agency prior to commencement of erection work.

B. Testing agency shall conduct and interpret tests and state in each report whether test specimens comply with requirements, and specifically state any deviations therefrom.

C. Provide access for testing agency to places where structural steel work is being fabricated or produced so that required inspection and testing can be accomplished.

D. Testing agency may inspect structural steel at plant before shipment; however, Engineer reserves right, at any time before final acceptance, to reject material not complying with specified requirements.

E. At Contractor's expense, correct deficiencies in structural steel work which inspections and laboratory tests reports have indicated to be not in compliance with requirements. Perform additional tests, at Contractor's expense, as may be necessary to re-confirm any non-compliance of original work, and as may be necessary to show compliance of corrected work.

3.03 CLEAN-UP

A. Remove from time to time, as directed, all rubbish and debris resulting from the Work and upon completion of the Work remove all unused materials, equipment, scaffolding, and similar construction related items, and perform such final cleaning services as may be necessary to leave the completed Work in a condition acceptable to the Owner.

END OF SECTION 05120

SECTION 05210 - STEEL JOISTS

PART 1 - GENERAL

1.01 SUMMARY

A. Extent of steel joists is shown on Drawings including basic layout and type of joists required, and as specified herein.

1.02 RELATED WORK

A. STRUCTURAL STEEL: Section 05120.

B. METAL DECKING: Section 05300.

C. COLD FORMED METAL FRAMING: Section 05400.

D. METAL FABRICATIONS: Section 05500.

E. MANUFACTURED ROOF PANELS: 07411.

1.03 QUALITY ASSURANCE

A. Reference Standards: Provide steel joists fabricated in compliance with the following:

1. Steel Joist Institute (SJI) "Standard Specifications, Load Tables and Weight Tables."

B. Field Welding Qualifications: Qualify welding processes and welding operators in accordance with American Welding Society "Structural Welding Code", AWS D1.1. If re-certification of welders is required, re-testing shall be Contractor's responsibility.

C. Welding Inspection and Testing: All joists and bridging, welded in-place, are subject to visual inspection and testing. The expense of removing and replacing any portion of steel joists for testing purposes shall be borne by the Contractor if welds are found to be unsatisfactory. Remove and replace work found to be defective and provide new acceptable work at no additional expense to the Owner.

C. Inspection: Inspect joists in accordance with SJI "Specifications".

1.04 SUBMITTALS

A. Product Data: Submit manufacturer's specifications and installation instructions for each type of joist and accessories. Include manufacturer's certification that joists comply with SJI "Specifications".

B. Shop Drawings: Submit detailed drawings showing layout of joist units, special connections, joining and accessories. Include mark, number, type, location and spacing of joists and bridging. Submit shop drawings and calculations signed and sealed by a Professional Engineer licensed in the State of Florida.

1. Provide templates or location drawings for installation of metal bearing plates.

1.05 DELIVERY, STORAGE AND HANDLING

A. Deliver, store and handle steel joists as recommended in SJI "Specifications". Handle and store joists in a manner to avoid deforming members and to avoid excessive stresses.

PART 2 - PRODUCTS

2.01 MATERIALS FOR STEEL JOISTS

A. Steel: Comply with SJI "Specifications".

B. Steel Prime Paint: Comply with SJI "Specifications". Do not use lead-containing primer.

2.02 FABRICATION

A. General: Fabricate steel joists in accordance with SJI "Specifications".

B. Holes in Chord Members: Provide holes in chord members where shown for securing other work to steel joists; however, deduct area of holes from the area of chord when calculating strength of member.

C. Extended Ends: Provide extended ends on joists where shown, complying with manufacturer's standards and requirements of applicable SJI "Specifications" and load tables.

D. Ceiling Extensions: Provide ceiling extensions in areas having ceiling attached directly to joist bottom chord. Provide either an extended bottom chord element or a separate unit, to suit manufacturer's standards, of sufficient strength to support ceiling construction. Extend ends to within 2" of finished wall surface unless otherwise indicated.

E. Bridging: Provide horizontal or diagonal type bridging for joists, complying with SJI "Specifications." Provide bridging anchors for ends of bridging lines terminating at walls or beams.

F. End Anchorage: Provide end anchorages including bearing plates to secure joists to adjacent construction, complying with SJI "Specifications," unless otherwise indicated.

2.03 SHOP PAINTING

A. Remove loose scale, heavy rust, and other foreign materials from fabricated joists and accessories before application of shop paint.

B. Apply one (1) shop coat of steel prime paint to joists and accessories by spray, dipping, or other method to provide a continuous dry paint film thickness of not less than 0.50 mil.

C. Primer shall be compatible with finish coat paint products specified in Section 09900 - PAINTING for steel indicated or scheduled to be finish painted.

PART 3 - EXECUTION

3.01 ERECTION

A. General: Place and secure steel joists in accordance with SJI "Specifications", approved shop drawings, and as herein specified.

B. Placing Joists: Do not start placement of steel joists until supporting work is in place and secured. Place joists on supporting work, adjust and align in accurate locations and spacing before permanently fastening.

1. Provide temporary bridging, connections, and anchors to ensure lateral stability during construction.

C. Bridging: Install bridging simultaneously with joist erection, before construction loads are applied. Anchor ends of bridging lines at top and bottom chords where terminating at walls or beams.

D. Fastening Joists: Field weld joists to supporting steel framework in accordance with SJI "Specifications" for type of joists used. Coordinate welding sequence and procedure with placing of joists.

E. Touch-Up Painting: After joist installation, paint field bolt heads and nuts, and welded areas, abraded or rusty surfaces on joists and steel supporting members. Wire brush surfaces and clean with solvent before painting. Use same type of paint as used for shop painting.

3.02 CLEAN-UP

A. Remove from time to time as directed, all rubbish and debris resulting from his work and upon completion of the work, remove all unused materials, equipment, scaffolding, and similar construction related items, and perform such final cleaning services as may be necessary to leave job in a condition acceptable to Owner.

END OF SECTION 05210

SECTION 05300 - METAL DECKING

PART 1 - GENERAL

1.01 SUMMARY

A. Extent of metal decking is indicated on the Drawings, including basic layout for the following type of deck required:

1. Metal Roof Deck.

2. Metal Floor Deck.

1.02 RELATED WORK

A. CONCRETE WORK: Section 03310.

B. STRUCTURAL STEEL: Section 05120.

C. STEEL JOISTS: Section 05210.

D. COLD FORMED METAL FRAMING: Section 05400.

E. METAL FABRICATIONS: Section 05500.

F. MANUFACTURED ROOF PANELS: Section 07411.

1.03 QUALITY ASSURANCE

A. Codes and Standards: Comply with provisions of the following, except as otherwise indicated or specified:

1. American Iron and Steel Institute (AISI):

   a. AISI Specification of the Design of Cold-Formed Steel Structural Members.

2. American Society for Testing and Materials (ASTM):

   a. Referenced Standards.

3. American Welding Society (AWS):

   a. AWS D1.1 Structural Welding Code - Steel.

   b. AWS D1.3 Structural Welding Code - Sheet Steel.

4. Steel Deck Institute (SDI):

   a. SDI Pub. No. 28 Design Manual for Composite Decks, Form Decks, Roof

Decks, and Cellular Metal Floor Decks with Electrical Distribution.

B. Qualification of Field Welding: Qualify welding processes and welding operators in accordance with AWS "Standard Qualification Procedure."

C. Welded decking in place is subject to inspection and testing. The expense of removing and replacing portions of decking for testing purposes will be borne by the Owner if welds are found to be satisfactory. Remove work found to be defective and replace with new acceptable work.

1.04 SUBMITTALS

A. Product Data: Submit manufacturer's specifications and installation instructions for each type of decking and accessories. Include manufacturer's certification as may be required to show compliance with these Specifications.

B. Shop Drawings: Submit detailed drawings showing layout and types of deck panels, anchorage details (including the type, size, spacing, location of all welds/screws), and conditions requiring closure panels, supplementary framing, cant strips, cut openings, special jointing or other accessories.

C. Insurance Certification: Assist the Owner in preparation and submittal of roof installation acceptance certification as may be necessary in connection with fire and extended coverage insurance.

PART 2 - PRODUCTS

2.01 MANUFACTURERS

A. Products: Provide metal decking by one of the following manufacturers:

1. Vulcraft Div., Nucor Corp.

2. Wheeling Corrugating Co.

3. Epic Metals Corp.

2.02 MATERIALS

A. Steel for Galvanized Metal Deck Units: ASTM A 446, Grade A.

B. Miscellaneous Steel Shapes: ASTM A 36.

C. Galvanizing: ASTM A 525, G60.

D. Galvanizing Repair Paint: High zinc-dust content paint for repair of damaged galvanized surfaces conforming to Department of Defense (DOD) P-21035A (SH), containing not less than 95 percent (by weight) metallic zinc content in dry film. Product equivalent to ZRC Worldwide’s “Galvilite.”

E. Sheet Metal Accessories: ASTM A 526, commercial quality, galvanized.

2.03 FABRICATION

A. Roof Deck Units: Provide deck configurations complying with SDI "Roof Deck Specifications," of metal thickness, depth and width indicated.

B. General: Form deck units in lengths to span 3 or more supports, with flush, telescoped or nested 2" laps at ends and interlocking or nested side laps, unless otherwise indicated.

C. Metal Cover Plates: Fabricate metal cover plates for end-abutting deck units of not less than same thickness as decking. Form to match contour of deck units and approximately 6" wide.

D. Metal Closure Strips: Fabricate metal closure strips, for openings between decking and other construction, of not less than 0.045" minimum (18 gage) sheet steel. Form to provide tight-fitting closures at open ends of flutes and sides of decking.

PART 3 - EXECUTION

3.01 INSTALLATION

A. General: Comply with the following:

1. Install deck units and accessories in accordance with manufacturer's published instructions and current recommendations and approved shop drawings, and as specified herein.

2. Place deck units on supporting steel framework and adjust to final position with ends accurately aligned and bearing on supporting members before being permanently fastened. Do not stretch or contract side lap interlocks.

3. Place deck units in straight alignment for entire length of run of cells and with close alignment between cells at ends of abutting units.

4. Place deck units flat and square, secured to adjacent framing without warp or excessive deflection.

5. Coordinate and cooperate with structural steel erector in locating decking bundles to prevent overloading of structural members.

6. Do not place deck units on concrete supporting structure until concrete has cured and is dry.

7. Do not use deck units for storage or working platforms until permanently secured.

B. Fastening Roof Deck Units: Comply with the following:

1. Install and anchor roof deck units to resist gross uplift loading as indicated on the Drawings.

2. Fasten roof deck units to steel supporting members as shown on roof plans. In addition, secure deck to each supporting member in ribs where side laps occur.

3. Comply with AWS requirements and procedures for manual shielded metal arc welding for appearance and quality of welds, and methods used in correcting welding work. Use welding washers where recommended by deck manufacturer.

C. Touch-Up Painting: After decking installation, wire brush, clean and paint scarred areas, welds and rust spots on top and bottom surfaces of decking units and supporting steel members. Touch up galvanized surfaces with galvanizing repair paint applied in accordance with manufacturer's instructions. In areas where shop-painted surfaces are to be exposed, apply touch-up paint to blend into adjacent surfaces.

D. Cutting and Fitting: Cut and neatly fit deck units and accessories around other work projecting through or adjacent to the decking, as shown.

E. Reinforcement at Openings: Provide additional metal reinforcement and closure pieces as required for strength, continuity of decking, as shown.

F. Joint Covers: Provide metal joint covers at abutting ends and changes in direction of deck units, except where taped joints are allowed.

G. Closure Strips: Provide metal closure strips at open uncovered ends and edges of roof decking, and in voids between decking and other construction. Weld into position to provide a complete decking installation.

3.02 CLEAN-UP

A. Remove from time to time as directed, all rubbish and debris resulting from his work and upon completion of the work, remove all unused materials, equipment, scaffolding, and similar construction related items, and perform such final cleaning services as may be necessary to leave job in a condition acceptable to the Owner.

END OF SECTION 05300

SECTION 05400 - COLD-FORMED METAL FRAMING

PART 1 - GENERAL

1.01 RELATED DOCUMENTS

Drawings and general provisions of Contract, including general and supplementary conditions and Division-1 Specification sections apply to work of this section.

1.02 SUMMARY

Extent of load bearing and non-load bearing cold-formed metal framing is indicated on drawings, including basic layout and type of framing units required.

1.03 SUBMITTALS

A. Product Data: Submit manufacturer's specifications and installation instructions for each type of framing members and accessories. Include manufacturer's certification as may be required to show compliance with these specifications.

B. Shop Drawings: Submit detailed drawings showing layout and types of framing members, anchorage details, and conditions requiring headers, supplementary framing, special jointing or other accessories. All shop drawings shall be signed and sealed by an engineer registered to practice in the State of Florida. Additionally all shop drawings shall be checked and signed by the General Contractor.

C. Structural Calculations: Submit complete structural calculations for the steel framing system. Calculations shall cover all studs, jamb studs, runner track, bracing, and attachments of light gauge framing. The engineer in responsible charge shall be the same engineer who signs and seals the shop drawings.

D. Product Data: Provide product data for each type of cold-formed metal framing, accessory and product to be used.

E. Mill Certificates: Provide mill certificates signed by the manufacturer certifying that their products comply with requirements, including uncoated steel thickness, yield strength, tensile strength, total elongation, and galvanized-coating thickness. In lieu of mill certificates, submit test reports from a qualified independent testing agency evidencing compliance with requirements.

F. Welder Certificates: Provide certificates of qualification for all welders.

1.04 QUALITY ASSURANCE

A. Codes and Standards: Comply with provisions of the following codes and standards, except as otherwise indicated or specified:

1. AISI "Specification for the Design of Cold-Formed Steel Structural Members".
2. AWS D1.3 "Structural Welding Code - Sheet Steel".
3. AISC “Specifications for the Design, Fabrication, and Erection of Structural Steel for Buildings"

B. Qualification of Field Welding: Qualify welding processes and welding operators in accordance with "Welder Qualification" procedures of AWS D1.1.

C. Metal framing in place is subject to inspection and testing. Expense of removing and replacing portions of framing for testing purposes will be borne by Owner if welds are found to be satisfactory. Remove work found to be defective and replace with new acceptable work.

D. Fire-Test-Response Characteristics: Where fire-resistance-rated assemblies are indicated, provide cold-formed metal framing identical to that tested as part of an assembly for fire resistance per ASTM E 119 by an independent testing and inspecting agency acceptable to authorities having jurisdiction.

E. FM Listing: Provide metal roof deck units which have been evaluated by Factory Mutual System and are listed in "Factory Mutual Approval Guide" for "Class I" fire rated construction.

F. County/Architect shall have the ability to disqualify any systems which they feel will fail to provide the effect or flexibility for alteration which is desired.

PART 2 - PRODUCTS

2.01 MANUFACTURERS

A. Available Manufacturers: Subject to compliance with requirements, manufacturers offering products which may be incorporated in the work include, but are not limited to, the following:

a. Unimast, Inc.

b. Dale/Incor Industries of Florida

c. Super Stud Building Products, Inc.

d. Alabama Metal Industries Corp.

2.02 MATERIALS

A. With each type of metal framing required, provide manufacturer's standard steel runners, bridging, lintels, clip angles, fasteners and accessories as needed to complete metal framing system.

B. All studs shall be "C"-shaped with flange return lip.

C. Steel for Galvanized Metal Framing Units:

1. Units 16 gage and heavier: ASTM A446, A570, or A611, yield point 50,000 psi.

2. Units 18 gage: ASTM A570 or A611, yield point 40,000 psi.

3. Units 20 gage and lighter: ASTM A446, A570 or A611, yield point 33,000 psi.

D. Miscellaneous Steel Shapes: ASTM A 36.

E. Sheet Metal Accessories: ASTM A 526, commercial quality, galvanized.

F. Galvanizing: ASTM A 525, G90.

G. Galvanizing Repair Paint: High zinc-dust content paint for repair of damaged galvanized surfaces and welds complying with Military Specifications MIL-P-21035 (Ships).

H. Expansion Anchors: Fabricated from corrosion-resistant materials, with capability to sustain, without failure, a load equal to 5 times the design load, as determined by testing per ASTM E 488 conducted by a qualified independent testing agency.

2.03 FABRICATION:

A. General: Fabricate cold-formed metal framing and accessories plumb, square, true to line and with connections securely fastened. Reinforce and stiffen units and assemblies as required to withstand handling, delivery and erection stresses.

B. Fabrication Tolerances: Fabricate assemblies to a maximum allowable tolerance variation from plumb, level and true to line of 1/8 inch in ten feet (1:960) and as follows:

1. Spacing: Space individual framing members no more than plus or minus 1/8 inch from plan location. Cumulative error shall not exceed minimum fastening requirements of sheathing or other finishing materials.

2. Squareness: Fabricate each cold-formed metal framing assembly to a maximum out-of-square tolerance of 1/8 inch.

PART 3 - EXECUTION

3.01 INSTALLATION:

A. General: Install framing units and accessories in accordance with manufacturer's recommendations and final shop drawings.

B. Splicing: Install framing members in one-piece lengths, unless splice connections are indicated.

C. Bracing: Provide temporary bracing as required until erection is complete.

D. Installation: Installation shall be performed by a competent contractor experienced in erection of metal framing and trained and certified in accordance with manufacturer’s recommendations. All framing components shall be plumbed, aligned and leveled.

E. All stud walls shall be laterally braced with cold formed channels spaced at 4'-0" on center, maximum. Lateral bracing attachments shall be with self-drilling screws or welds.

END OF SECTION

SECTION 05500 - METAL FABRICATIONS

PART 1 - GENERAL

RELATED DOCUMENTS

Drawings and general provisions of the Contract, including General and Supplementary Conditions and Division 1 Specification Sections, apply to this Section.

SUMMARY

This Section includes the following:

Steel ship's ladders.

Related Sections include the following:

Division 5 Section "Pipe and Tube Railings" for metal pipe and tube handrails and railings.

SUBMITTALS

Product Data: For the following:

Ships Ladder.

Shop Drawings: Detail fabrication and erection of each metal fabrication indicated. Include plans, elevations, sections, and details of metal fabrications and their connections. Show anchorage and accessory items.

Provide templates for anchors and bolts specified for installation under other Sections.

Qualification Data: For firms and persons specified in "Quality Assurance" Article to demonstrate their capabilities and experience. Include lists of completed projects with project names and addresses, names and addresses of architects and owners, and other information specified.

QUALITY ASSURANCE

Fabricator Qualifications: A firm experienced in producing metal fabrications similar to those indicated for this Project and with a record of successful in-service performance, as well as sufficient production capacity to produce required units.

Welding: Qualify procedures and personnel according to the following:

AWS D1.1, "Structural Welding Code--Steel."

AWS D1.2, "Structural Welding Code--Aluminum."

AWS D1.3, "Structural Welding Code--Sheet Steel."

Certify that each welder has satisfactorily passed AWS qualification tests for welding processes involved and, if pertinent, has undergone recertification.

PROJECT CONDITIONS

Field Measurements: Where metal fabrications are indicated to fit walls and other construction, verify dimensions by field measurements before fabrication and indicate measurements on Shop Drawings. Coordinate fabrication schedule with construction progress to avoid delaying the Work.

Established Dimensions: Where field measurements cannot be made without delaying the Work, establish dimensions and proceed with fabricating metal fabrications without field measurements. Coordinate construction to ensure that actual dimensions correspond to established dimensions. Allow for trimming and fitting.

COORDINATION

Coordinate installation of anchorages for metal fabrications. Furnish setting drawings, templates, and directions for installing anchorages, including sleeves, concrete inserts, anchor bolts, and items with integral anchors, that are to be embedded in concrete or masonry. Deliver such items to Project site in time for installation.

PART 2 - PRODUCTS

METALS, GENERAL

Metal Surfaces, General: For metal fabrications exposed to view in the completed Work, provide materials with smooth, flat surfaces without blemishes. Do not use materials with exposed pitting, seam marks, roller marks, rolled trade names, or roughness.

FERROUS METALS

FASTENERS

General: Provide Type 304 or 316 stainless-steel fasteners for exterior use and zinc-plated fasteners with coating complying with ASTM B 633, Class Fe/Zn 5, where built into exterior walls. Select fasteners for type, grade, and class required.

Bolts and Nuts: Regular hexagon-head bolts, ASTM A 307, Grade A (ASTM F 568M, Property Class 4.6); with hex nuts, ASTM A 563 (ASTM A 563M); and, where indicated, flat washers.

Anchor Bolts: ASTM F 1554, Grade 36.

Machine Screws: ASME B18.6.3 (ASME B18.6.7M).

Lag Bolts: ASME B18.2.1 (ASME B18.2.3.8M).

Plain Washers: Round, carbon steel, ASME B18.22.1 (ASME B18.22M).

Lock Washers: Helical, spring type, carbon steel, ASME B18.21.1 (ASME B18.21.2M).

Expansion Anchors: Anchor bolt and sleeve assembly of material indicated below with capability to sustain, without failure, a load equal to six times the load imposed when installed in unit masonry and equal to four times the load imposed when installed in concrete, as determined by testing per ASTM E 488, conducted by a qualified independent testing agency.

Material: Carbon-steel components zinc-plated to comply with ASTM B 633, Class Fe/Zn 5.

Material: Alloy Group 1 or 2 stainless-steel bolts complying with ASTM F 593 (ASTM F 738M) and nuts complying with ASTM F 594 (ASTM F 836M).

FABRICATION, GENERAL

Shop Assembly: Preassemble items in shop to greatest extent possible to minimize field splicing and assembly. Disassemble units only as necessary for shipping and handling limitations. Use connections that maintain structural value of joined pieces. Clearly mark units for reassembly and coordinated installation.

Shear and punch metals cleanly and accurately. Remove burrs.

Ease exposed edges to a radius of approximately 1/32 inch (1 mm), unless otherwise indicated. Form bent-metal corners to smallest radius possible without causing grain separation or otherwise impairing work.

Weld corners and seams continuously to comply with the following:

Use materials and methods that minimize distortion and develop strength and corrosion resistance of base metals.

Obtain fusion without undercut or overlap.

Remove welding flux immediately.

At exposed connections, finish exposed welds and surfaces smooth and blended so no roughness shows after finishing and contour of welded surface matches that of adjacent surface.

Provide for anchorage of type indicated; coordinate with supporting structure. Fabricate and space anchoring devices to secure metal fabrications rigidly in place and to support indicated loads.

Cut, reinforce, drill, and tap metal fabrications as indicated to receive finish hardware, screws, and similar items.

Fabricate joints that will be exposed to weather in a manner to exclude water, or provide weep holes where water may accumulate.

Allow for thermal movement resulting from the following maximum change (range) in ambient and surface temperatures by preventing buckling, opening up of joints, overstressing of components, failure of connections, and other detrimental effects. Base engineering calculation on surface temperatures of materials due to both solar heat gain and nighttime-sky heat loss.

Temperature Change (Range): 120 deg F (67 deg C), ambient; 180 deg F (100 deg C), material surfaces.

Form exposed work true to line and level with accurate angles and surfaces and straight sharp edges.

Remove sharp or rough areas on exposed traffic surfaces.

Form exposed connections with hairline joints, flush and smooth, using concealed fasteners where possible. Use exposed fasteners of type indicated or, if not indicated, Phillips flat-head (countersunk) screws or bolts. Locate joints where least conspicuous.

STEEL SHIP'S LADDERS

Provide Ship Ladder: Aluminum ACL-500 ship ladder (folding) by ACL industries 603-668-1276 or equal.

Provide ship's ladders where indicated. Fabricate of open-type construction with structural-steel channel or steel plate stringers, steel pipe handrails, and steel bar grating treads, unless otherwise indicated. Provide brackets and fittings for installation.

Comply with applicable requirements in Division 5 Section "Pipe and Tube Railings" for steel pipe railings.

Galvanize ship's ladders, including brackets and fasteners, in the following locations:

Interior, where indicated.

FINISHES, GENERAL

Comply with NAAMM's "Metal Finishes Manual for Architectural and Metal Products" for recommendations for applying and designating finishes.

Finish metal fabrications after assembly.

ALUMINUM FINISHES

Finish designations prefixed by AA comply with the system established by the Aluminum Association for designating aluminum finishes.

As-Fabricated Finish: AA-M10 (Mechanical Finish: as fabricated, unspecified).

Class I, Clear Anodic Finish: AA-M12C22A41 (Mechanical Finish: nonspecular as fabricated; Chemical Finish: etched, medium matte; Anodic Coating: Architectural Class I, clear coating 0.018 mm or thicker) complying with AAMA 607.1.

PART 3 - EXECUTION

INSTALLATION, GENERAL

Fastening to In-Place Construction: Provide anchorage devices and fasteners where necessary for securing metal fabrications to in-place construction. Include threaded fasteners for concrete and masonry inserts, toggle bolts, through-bolts, lag bolts, wood screws, and other connectors.

Cutting, Fitting, and Placement: Perform cutting, drilling, and fitting required for installing metal fabrications. Set metal fabrications accurately in location, alignment, and elevation; with edges and surfaces level, plumb, true, and free of rack; and measured from established lines and levels.

Provide temporary bracing or anchors in formwork for items that are to be built into concrete, masonry, or similar construction.

Fit exposed connections accurately together to form hairline joints. Weld connections that are not to be left as exposed joints but cannot be shop welded because of shipping size limitations. Do not weld, cut, or abrade surfaces of exterior units that have been hot-dip galvanized after fabrication and are for bolted or screwed field connections.

Field Welding: Comply with the following requirements:

Use materials and methods that minimize distortion and develop strength and corrosion resistance of base metals.

Obtain fusion without undercut or overlap.

Remove welding flux immediately.

At exposed connections, finish exposed welds and surfaces smooth and blended so no roughness shows after finishing and contour of welded surface matches that of adjacent surface.

Corrosion Protection: Coat concealed surfaces of aluminum that will come into contact with grout, concrete, masonry, wood, or dissimilar metals with a heavy coat of bituminous paint.

SETTING BEARING AND LEVELING PLATES

Clean concrete and masonry bearing surfaces of bond-reducing materials, and roughen to improve bond to surfaces. Clean bottom surface of plates.

Set bearing and leveling plates on wedges, shims, or leveling nuts. After bearing members have been positioned and plumbed, tighten anchor bolts. Do not remove wedges or shims but, if protruding, cut off flush with edge of bearing plate before packing with grout.

Use nonshrink grout, either metallic or nonmetallic, in concealed locations where not exposed to moisture; use nonshrink, nonmetallic grout in exposed locations, unless otherwise indicated.

Pack grout solidly between bearing surfaces and plates to ensure that no voids remain.

ADJUSTING AND CLEANING

Touchup Painting: Immediately after erection, clean field welds, bolted connections, and abraded areas of shop paint, and paint exposed areas with the same material as used for shop painting to comply with SSPC-PA 1 for touching up shop-painted surfaces.

Apply by brush or spray to provide a minimum 2.0-mil (0.05-mm) dry film thickness.

Touchup Painting: Cleaning and touchup painting of field welds, bolted connections, and abraded areas of shop paint are specified in Division 9 Section "Painting."

Galvanized Surfaces: Clean field welds, bolted connections, and abraded areas and repair galvanizing to comply with ASTM A 780.

END OF SECTION 05500

SECTION 06100 - ROUGH CARPENTRY

PART 1 - GENERAL

RELATED DOCUMENTS:

Drawings and general provisions of Contract, including General and Supplementary Conditions and Division-1 Specification sections, apply to work of this section.

SUMMARY:

Types of work in this section include rough carpentry for:

Plywood (Non-Structural)
Backing Panels (Telephones, Electrical Equipment)

Building Wrap and Tape

Wood grounds, nailers, and blocking.

DEFINITIONS:

Rough carpentry includes carpentry work not specified as part of other sections and which is generally not exposed, except as otherwise indicated.

PRODUCT HANDLING:

Delivery and Storage: Keep materials under cover and dry. Protect against exposure to weather and contact with damp or wet surfaces. Stack lumber as well as plywood and other panels; provide for air circulation within and around stacks and under temporary coverings including polyethylene and similar materials.

PROJECT CONDITIONS:

Coordination: Fit carpentry work to other work; scribe and cope as required for accurate fit. Correlate location of furring, nailers, blocking, grounds and similar supports to allow attachment of other work.

PART 2 - PRODUCTS

LUMBER, GENERAL:

Lumber Standards: Manufacture lumber to comply with PS 20 "American Softwood Lumber Standard" and with applicable grading rules of inspection agencies certified by American Lumber Standards Committee's (ALSC) Board of Review.

Inspection Agencies: Inspection agencies and the abbreviations used to reference with lumber grades and species include the following:

RIS - Redwood Inspection Service.
NLGA - National Lumber Grades Authority (Canadian).

SPIB - Southern Pine Inspection Bureau.
WCLIB - West Coast Lumber Inspection Bureau.
WWPA - Western Wood Products Association.

Grade Stamps: Factory-mark each piece of lumber with grade stamp of inspection agency evidencing compliance with grading rule requirements and identifying grading agency, grade, species, moisture content at time of surfacing, and mill.

For exposed lumber apply grade stamps to ends or back of each piece, or omit grade stamps entirely and issue certificate of grade compliance from inspection agency in lieu of grade stamp.

Nominal sizes are indicated, except as shown by detail dimensions. Provide actual sizes as required by PS 20, for moisture content specified for each use.

Provide dressed lumber, S4S, unless otherwise indicated.

Provide seasoned lumber with 19 percent maximum moisture content at time of dressing and shipment for sizes 2" or less in nominal thickness, unless otherwise indicated.

SHEATHING:

Oriented Strand Board Roof Sheathing: Refer to Structural Drawings.

PLYWOOD BACKING PANELS:

Telephone and Electrical Equipment Backing Panels: Exposure 1, fire-retardant treated, in thickness indicated or, if not indicated, not less than 1/2 inch thick.

FASTENERS:

General: Refer to Structural Drawings.

METAL FRAMING ANCHORS:

General: Refer to Structural Drawings:

MISCELLANEOUS LUMBER:

SHEATHING:

Oriented Strand Board Roof Sheathing: Refer to Structural Drawings.

Provide wood for support or attachment of other work including rooftop equipment curbs and support bases, cant strips, bucks, nailers, blocking, furring, grounds, stripping and similar members. Provide lumber of sizes indicated, worked into shapes shown, and as follows:

Moisture content: 19 percent maximum for lumber items not specified to receive wood preservative treatment.

Grade: Standard Grade light framing size lumber of any species or board size lumber as required. No. 3 Common or Standard grade boards per WCLIB or WWPA rules or No. 3 boards per SPIB rules.

MISCELLANEOUS MATERIALS:

Fasteners and Anchorages: Provide size, type, material and finish as indicated and as recommended by applicable standards, complying with applicable Federal Specifications for nails, staples, screws, bolts, nuts, washers and anchoring devices. Provide metal hangers and framing anchors of the size and type recommended by the manufacturer for each use including recommended nails.

Where rough carpentry work is exposed to weather, in ground contact, or in area of high relative humidity, provide fasteners and anchorages with a hot-dip zinc coating (ASTM A 153).

Building Wrap: Air-retarder sheeting made from polyolefins; cross-laminated films, woven strands, or spun-bonded fibers; coated or uncoated; with or without perforations; and complying with ASTM E 1677, Type I.

1. Thickness: Not less than 3 mils.
2. Permeance: Not less than 10 perms.
3. Flame-Spread Index: 25 or less per ASTM E 84.
4. Allowable Exposure Time: Not less than three months:

Building Wrap Tape: Pressure-sensitive plastic tape recommended by building wrap manufacturer from sealing joints and penetrations in building wrap.

Adhesives for Field Gluing Panels to Framing: Formulation complying with APA AFG-01 that is approved for use with type of construction panel indicated by both adhesive and panel manufacturers.

Building Paper Moisture Barrier: ASTM D 226, Type I; asphalt saturated felt, non- perforated, 15-lb. type.

WOOD TREATMENT BY PRESSURE PROCESS:

Preservative Treatment: Where lumber or plywood is indicated as "Trt-Wd" or "Treated", or is specified herein to be treated, comply with applicable requirements of AWPA Standards C2 (Lumber) and C9 (Plywood) and of AWPB Standards listed below. Mark each treated item with the AWPB Quality Mark Requirements.

Pressure-treat above-ground items with water-borne preservatives to comply with AWPB LP-2. After treatment, kiln-dry lumber and plywood to a maximum moisture content, respectively, of 19 percent and 15 percent. Treat indicated items and the following:

Wood cants, nailers, curbs, equipment support bases, blocking, stripping, and similar members in connection with roofing, flashing, vapor barriers and waterproofing.

Wood sills, sleepers, blocking, furring, stripping and similar concealed members in contact with masonry or concrete.

Wood framing members less than 18" above grade.

Wood floor plates installed over concrete slabs directly in contact with earth.

Complete fabrication of treated items prior to treatment, where possible. If cut after treatment, coat cut surfaces with heavy brush coat of same chemical used for treatment and to comply with AWPA M4. Inspect each piece of lumber or plywood after drying and discard damaged or defective pieces.

PART 3 - EXECUTION

INSTALLATION, GENERAL:

Discard units of material with defects which might impair quality of work, and units which are too small to use in fabricating work with minimum joints or optimum joint arrangement.

Set carpentry work to required levels and lines, with members plumb and true and cut and fitted.

Securely attach carpentry work to substrate by anchoring and fastening as shown and as required by recognized standards.

Countersink nail heads on exposed carpentry work and fill holes.

Use common wire nails, except as otherwise indicated. Use finishing nails for finish work. Select fasteners of size that will not penetrate members where opposite side will be exposed to view or will receive finish materials. Make tight connections between members. Install fasteners without splitting of wood; predrill as required.

WOOD GROUNDS, NAILERS, BLOCKING AND SLEEPERS:

Provide wherever shown and where required for screeding or attachment of other work. Form to shapes as shown and cut as required for true line and level of work to be attached. Coordinate location with other work involved.

Attach to substrates as required to support applied loading. Countersink bolts and nuts flush with surfaces, unless otherwise indicated. Build into masonry during installation of masonry work. Where possible, anchor to formwork before concrete placement.

Provide permanent grounds of dressed, preservative treated, key- bevelled lumber not less than 1-1/2" wide and of thickness required to bring face of ground to exact thickness of finish material involved. Remove temporary grounds when no longer required.

WOOD FURRING:

Install plumb and level with closure strips at edges and openings. Shim with wood as required tolerance of finished work.

END OF SECTION 06100

SECTION 07210 - BUILDING INSULATION

PART 1 - GENERAL

RELATED DOCUMENTS

Drawings and general provisions of the Contract, including General and Supplementary Conditions and Division 1 Specification Sections, apply to this Section.

SUMMARY

This Section includes the following:

Cavity wall foam in place insulation.

Related Sections: The following Sections contain requirements that relate to this Section:

Division 4 Section "Unit Masonry" for insulation specified as part of these systems.

Division 7 Section "Modified Bitumen Membrane Roofing" for insulation specified as part of roofing construction.

Division 9 Section indicated below for insulation installed as part of metal-framed wall and partition assemblies:

"Gypsum Board Assemblies."

SUBMITTALS

General: Submit each item in this Article according to the Conditions of the Contract and Division 1 Specification Sections.

Product Data for each type of insulation product specified.

Samples of exposed insulation for initial selection in the form of actual units or sections of units showing the full range of colors available for each type of exposed insulation indicated.

Samples for verification in full-size units of each type of exposed insulation indicated for each color specified.

Product test reports from and based on tests performed by a qualified independent testing agency evidencing compliance of insulation products with specified requirements including those for thermal resistance, fire-test-response characteristics, water-vapor transmission, water absorption, and other properties, based on comprehensive testing of current products.

Research or evaluation reports of the model code organization acceptable to authorities having jurisdiction that evidence compliance of foam-plastic insulations with building code in effect for Project.

QUALITY ASSURANCE

Single-Source Responsibility for Insulation Products: Obtain each type of building insulation from

a single source with resources to provide products complying with requirements indicated without delaying the Work.

Fire-Test-Response Characteristics: Provide insulation and related materials with the fire-test-response characteristics indicated on Drawings or specified elsewhere in this Section as determined by testing identical products per test method indicated below by UL or another testing and inspecting agency acceptable to authorities having jurisdiction. Identify materials with appropriate markings of applicable testing and inspecting agency.

Surface-Burning Characteristics: ASTM E 84.

Fire-Resistance Ratings: ASTM E 119.

Combustion Characteristics: ASTM E 136.

DELIVERY, STORAGE, AND HANDLING

Protect insulation materials from physical damage and from deterioration by moisture, soiling, and other sources. Store inside and in a dry location. Comply with manufacturer's written instructions for handling, storing, and protecting during installation.

Protect plastic insulation as follows:

Do not expose to sunlight, except to extent necessary for period of installation and concealment.

Protect against ignition at all times. Do not deliver plastic insulating materials to Project site before installation time.

Complete installation and concealment of plastic materials as rapidly as possible in each area of construction.

PART 2 - PRODUCTS

MANUFACTURERS

Available Manufacturers: Subject to compliance with requirements, manufacturers offering insulation products that may be incorporated in the work include, but are not limited to, the following:

Tailored Chemical Products, Inc. Product Corefill 500 or Equivalent.

INSULATION MATERIALS

A. Insulation – Foam-in-Place system consisting of the A component (resin) and B Component (catalyst). Thickness shall be in accordance with architectural drawings. The insulation shall have the following physical properties:
   1. Density of .8-1.3 lb/ft^3
   2. Compressive Strength 35 PSI
   3. Fire Characteristics ASTM E-84
      a. Flame Spread 5
      b. Smoke 0

c. Fuel 0

4. Thermal Conductivity C-177, @ 75 degrees F
K factor of 0.219 B Tu in/hr. –ft² -degrees F

5. Water Vapor Transmission ASTM C-355
Permeability – perms-in 15.5 to 16.9

PART 3 - EXECUTION

EXAMINATION

Examine substrates and conditions, with Installer present, for compliance with requirements of Sections in which substrates and related work are specified and to determine if other conditions affecting performance of insulation are satisfactory. Do not proceed with installation until unsatisfactory conditions have been corrected.

PREPARATION

Clean substrates of substances harmful to insulations or vapor retarders, including removing projections capable of puncturing vapor retarders or that interfere with insulation attachment.

Close off openings in cavities receiving poured-in-place insulation to prevent escape of insulation. Provide bronze or stainless-steel screens (inside) where openings must be maintained for drainage or ventilation.

INSTALLATION, GENERAL

Comply with insulation manufacturer's written instructions applicable to products and application indicated.

APPLICATION

A. Apply insulation in accordance with manufacturer’s instructions.

B. Apply insulation by injection method, to a uniform monolithic density without voids.

C. Install foam insulation after all masonry and structural concrete work is in place.

D. Drill 1 inch holes in each vertical column of block cells at 48 inches above the floor level and thereafter at every 8 feet of wall height until the void is completely full.

E. Pressure inject foam into cells a minimum pressure of 120-160 PSI.

PROTECTION

General: Protect installed insulation and vapor retarders from damage due to harmful weather exposures, physical abuse, and other causes. Provide temporary coverings or enclosures where insulation is subject to abuse and cannot be concealed and protected by permanent construction immediately after installation.

END OF SECTION 07210

SECTION 07411 - MANUFACTURED ROOF PANELS

PART 1 - GENERAL

RELATED DOCUMENTS

Drawings and general provisions of the Contract, including General and Supplementary Conditions and Division 1 Specification Sections, apply to this Section.

SUMMARY

This Section includes the following:

Standing-seam roof panels.

Related Sections include the following:

Division 5 Section "Structural Steel" for structural-steel framing.

Division 5 Section "Cold-Formed Metal Framing" for metal framing.

Division 7 Section "Sheet Metal Flashing and Trim" for flashing not part of roofing and other sheet metal work.

Division 7 Section "Joint Sealants" for field-applied sealants.

PERFORMANCE REQUIREMENTS

General: Provide manufactured roof panel assemblies complying with performance requirements indicated and capable of withstanding structural movement, thermally induced movement, and exposure to weather without failure or infiltration of water into the building interior.

Air Infiltration: Provide manufactured roof panel assemblies with permanent resistance to air leakage through assembly of not more than 0.09 cfm/sq. ft. (0.45 L/s/sq. m) of fixed roof area when tested according to ASTM E 1680 at a static-air-pressure difference of 4.0 lbf/sq. ft. (192 Pa).

Water Penetration: Provide manufactured roof panel assemblies with no water penetration as defined in the test method when tested according to ASTM E 1646 at a minimum differential pressure of 20 percent of inward acting, wind-load design pressure of not less than 6.24 lb/sq. ft. (300 Pa) and not more than 12.0 lb/sq. ft. (575 Pa).

Structural Performance: Provide manufactured roof panel assemblies capable of safely supporting design loads indicated under in-service conditions with vertical deflection no greater than the following, based on testing manufacturer's standard units according to ASTM E 1592 by a qualified independent testing and inspecting agency.

Maximum Deflection: 1/140 of the span.

Solar Reflectance: Provide manufactured roof panel assemblies with a Solar Reflectance Index

(SRI) value of 29 or higher for steep slope (above 2:12) roofing and an SRI value of 78 or higher for low slope (2:12 of less) roofing.

SUBMITTALS

Product Data: Include manufacturer's product specifications, standard details, certified product test results, and general recommendations, as applicable to materials and finishes for each component and for total panel assemblies.

Shop Drawings: Show layouts of panels on roofs, details of edge conditions, joints, panel profiles, supports, anchorages, trim, flashings, underlayment, closures, snow guards, and special details. Distinguish between factory- and field-assembled work.

For installed products indicated to comply with certain design loadings, include structural analysis data signed and sealed by the qualified professional engineer responsible for their preparation.

Samples for Initial Selection: Manufacturer's color charts or chips showing the full range of colors, textures, and patterns available for roof panels with factory-applied finishes.

Samples for Verification: Provide sample panels 12 inches (300 mm) long by actual panel width, in the profile, style, color, and texture indicated. Include clips, caps, battens, fasteners, closures, and other exposed panel accessories.

Qualification Data: For firms and persons specified in the "Quality Assurance" Article to demonstrate their capabilities and experience. Include lists of completed projects with project names and addresses, names and addresses of architects and owners, and other information specified.

Product Test Reports: Indicate compliance of manufactured roof panel assemblies and materials with performance and other requirements based on comprehensive testing of current products.

QUALITY ASSURANCE

Installer Qualifications: Engage an experienced installer who has completed metal roof panel projects similar in material, design, and extent to that indicated for this Project and with a record of successful in-service performance.

Professional Engineer Qualifications: A professional engineer who is legally qualified to practice in the jurisdiction where the Project is located and who is experienced in providing engineering services of the kind indicated.

Testing Agency Qualifications: An independent testing agency with the experience and capability to conduct the testing indicated without delaying the Work, as documented according to ASTM E 699.

Fire-Test-Response Characteristics: Where fire-resistance-rated roof panel assemblies are indicated, provide materials and construction identical to those of assemblies tested for fire resistance per ASTM E 119 by an independent testing and inspecting agency acceptable to authorities having jurisdiction.

Wind-Uplift Resistance: Provide roof panel assemblies that meet requirements of UL 580 for Class 90 wind-uplift resistance.

Fire-Resistance Ratings: As indicated by design designations in UL's "Fire Resistance Directory" or in the listing of another testing and inspecting agency acceptable to authorities having jurisdiction.

DELIVERY, STORAGE, AND HANDLING

Deliver panels and other components so they will not be damaged or deformed. Package panels for protection against damage during transportation or handling.

Handling: Exercise care in unloading, storing, and erecting roof panels to prevent bending, warping, twisting, and surface damage.

Stack materials on platforms or pallets, covered with tarpaulins or other suitable weathertight and ventilated covering. Store panels to ensure dryness. Do not store panels in contact with other materials that might cause staining, denting, or other surface damage.

PROJECT CONDITIONS

Field Measurements: Verify location of structural members and openings in substrates by field measurements before fabrication and indicate measurements on Shop Drawings. Coordinate fabrication schedule with construction progress to avoid delaying the Work.

Established Dimensions: Where field measurements cannot be made without delaying the Work, either establish opening dimensions and proceed with fabricating roof panels without field measurements or allow for trimming panel units. Coordinate roof construction to ensure actual locations of structural members and to ensure opening dimensions correspond to established dimensions.

WARRANTY

General Warranty: Special warranties specified in this Article shall not deprive the Owner of other rights the Owner may have under other provisions of the Contract Documents and shall be in addition to, and run concurrent with, other warranties made by the Contractor under requirements of the Contract Documents.

Special Finish Warranty: Submit a written warranty, signed by manufacturer, covering failure of the factory-applied exterior finish on metal roof panels within the specified warranty period and agreeing to
repair finish or replace roof panels that show evidence of finish deterioration. Deterioration of finish includes, but is not limited to, color fade, chalking, cracking, peeling, and loss of film integrity.

Finish Warranty Period: 20 years from date of Substantial Completion.

Special Weathertight Warranty: Submit a written warranty executed by manufacturer agreeing to repair or replace metal roof panel assembly that fails to remain weathertight within the specified warranty period.

Weathertight Warranty Period: 5 years from date of Substantial Completion.

PART 2 - PRODUCTS

MANUFACTURERS

Available Manufacturers: Subject to compliance with requirements, manufacturers offering metal panels that may be incorporated into the Work include, but are not limited to, the following:

Manufacturers: Subject to compliance with requirements, provide panels by one of the following:

AEP-Span.
AEICOR.
MBCI

METALS AND FINISHES

Panel: 24 gauge galvalume, sheet made up of 55% aluminum, 1.6% silicon and the balance zinc, as described in ASTM A 792.

Finish: Apply the following organic coating in thickness indicated. Furnish appropriate air-drying spray finish in matching color for touchup.

Fluoropolymer 2-Coat Coating System: Manufacturer's standard 2-coat, thermocured system composed of specially formulated inhibitive primer and fluoropolymer color topcoat containing not less than 70 percent polyvinylidene fluoride resin by weight with a total minimum dry film thickness of 0.9 mil (0.023 mm) and 30 percent reflective gloss when tested according to ASTM D 523.

Durability: Provide coating field tested under normal range of weather conditions for a minimum of 20 years without significant peel, blister, flake, chip, crack, or check in finish; without chalking in excess of a chalk rating of 8 according to ASTM D 4214; and without fading in excess of 5 Hunter units.

Color: As selected by Architect from manufacturer's full range of colors.

ROOF PANEL ASSEMBLIES

Standing-Seam Roof Panels: Manufacturer's standard factory-formed, standing-seam roof panel assembly designed for concealed mechanical attachment of panels to roof purlins or deck.

Height: 2”
Width: 16”
Clips: Provide minimum 0.0625-inch- (1.6-mm-) thick, stainless-steel panel clips designed to meet negative-load requirements.

THERMAL INSULATION

Nailable Roof Deck Insulation System: Vent Top Therma Cal (Carnell Corp. or equal), 6” thick 4’ X 8’ panels, 2.2 psf, R-30 (long term thermal resistance) one layer of 7/16” O.S.P. with 3/4” airspace between board and polyisocyanurate.

UNDERLAYMENT MATERIALS

Self-Adhering Roof Underlayment: Grace Ice and Water Sheld, 40 mil as indicated on Documents, by W. R. Grace and Company.

MISCELLANEOUS MATERIALS

General: Provide materials and accessories required for a complete roof panel assembly and as recommended by panel manufacturer, unless otherwise indicated.

Fasteners: Self-tapping screws, bolts, nuts, self-locking rivets and bolts, end-welded studs, and other suitable fasteners designed to withstand design loads.

Use aluminum or stainless-steel fasteners for exterior applications and aluminum or galvanized steel fasteners for interior applications.

Provide exposed fasteners with heads matching color of panel by means of plastic caps or factory-applied coating.

Provide metal-backed neoprene washers under heads of exposed fasteners bearing on weather side of panels.

Locate and space exposed fasteners in true vertical and horizontal alignment. Use proper tools to obtain controlled uniform compression for positive seal without rupture of neoprene washer.

Accessories: Unless otherwise specified, provide components required for a complete roof panel assembly including trim, copings, fasciae, mullions, sills, corner units, ridge closures, clips, seam covers, battens, flashings, gutters, sealants, gaskets, fillers, closure strips, and similar items. Match materials and finishes of panels.

Closure Strips: Closed-cell, self-extinguishing, expanded, cellular, rubber or cross-linked, polyolefin-foam flexible closure strips. Cut or premold to match configuration of panels. Provide closure strips where indicated or necessary to ensure weathertight construction.

Sealing Tape: Pressure-sensitive, 100 percent solids, polyisobutylene compound sealing tape with release paper backing. Provide permanently elastic, nonsag, nontoxic, nonstaining tape.

Elastomeric Joint Sealant: ASTM C 920, of base polymer, type, grade, class, and use classifications required to seal joints in panel roofing and remain weathertight. Provide sealant recommended by panel manufacturer.

Bituminous Coating: Cold-applied asphalt mastic, SSPC-Paint 12, compounded for 15-mil (0.4-mm) dry film thickness per coat, unless otherwise indicated. Provide inert-type noncorrosive compound free of asbestos fibers, sulfur components, and other deleterious impurities as recommended by manufacturer.

Expansion-Joint Sealant: For hooked-type expansion joints that must be free to move, provide nonsetting, nonhardening, nonmigrating, heavy-bodied polyisobutylene sealant as recommended

by manufacturer.

FABRICATION

General: Fabricate and finish panels and accessories at the factory to greatest extent possible, by manufacturer's standard procedures and processes, as necessary to fulfill indicated performance requirements demonstrated by laboratory testing. Comply with indicated profiles and with dimensional and structural requirements.

PART 3 - EXECUTION

EXAMINATION

Examine substrates and conditions, with Installer present, for compliance with requirements indicated for conditions affecting performance of metal panel roofing.

Panel Supports and Anchorage: Examine roof framing to verify that purlins, angles, channels, and other secondary structural panel support members and anchorage have been installed according to written instructions of panel manufacturer.

Do not proceed with roof panel installation until unsatisfactory conditions have been corrected.

PREPARATION

Coordinate metal panel roofing with rain drainage work; flashing; trim; and construction of decks, parapets, walls, and other adjoining work to provide a leakproof, secure, and noncorrosive installation.

Promptly remove protective film, if any, from exposed surfaces of metal panels. Strip with care to avoid damage to finish.

PANEL INSTALLATION

General: Comply with panel manufacturer's written instructions and recommendations for installation, as applicable to project conditions and supporting substrates. Anchor panels and other components of the Work securely in place, with provisions for thermal and structural movement.

Field cutting exterior panels by torch is not permitted.

Install panels with concealed fasteners, unless otherwise indicated.

Install panels with exposed exterior and interior fasteners, prefinished to match panel finishes.

Install panels over solid substrate with minimum 3:12 (1:4) slope. Install 1 ply of felt from lower edge up, with at least 3-inch (75-mm) side laps and 4-inch (100-mm) end laps.

Accessories: Install components required for a complete roof panel assembly including trim, copings, fasciae, ridge closures, clips, seam covers, battens, flashings, gutters, sealants, gaskets, fillers, closure strips, and similar items.

Separate dissimilar metals by painting each metal surface in area of contact with a bituminous coating, by applying rubberized-asphalt underlayment to each metal surface, or by other permanent separation as recommended by manufacturers of dissimilar metals.

Install felt underlayment and building-paper slip sheet on roof deck under metal panels, unless otherwise recommended by panel manufacturer. Use adhesive for temporary anchorage, where possible, to minimize use of mechanical fasteners under metal panels. Apply from eave to ridge in shingle fashion and lap joints a minimum of 2 inches (50 mm).

Coat back side of metal panels with bituminous coating where it will contact wood, ferrous metal, or cementitious construction.

Joint Sealers: Install gaskets, joint fillers, and sealants where indicated and where required for weatherproof performance of panel assemblies. Provide types of gaskets, fillers, and sealants indicated or, if not otherwise indicated, types recommended by panel manufacturer.

Standing-Seam Roof Panel Assembly: Fasten panels to supports with concealed clip according to panel manufacturer's written instructions.

Install clips at each support with self-drilling/self-tapping fasteners.

At end laps of panels, install tape calk between panels.

Install factory-calked cleats at standing-seam joints. Apply snap-on batten to panels to provide a weathertight joint.

Seaming: Complete seaming of panel joints by operating portable power-driven equipment of type recommended by panel manufacturer to provide a weathertight joint.

Installation Tolerances: Shim and align panel units within installed tolerance of 1/4 inch in 20 feet (6 mm in 6 m) on slope and location lines as indicated and within 1/8-inch (3-mm) offset of adjoining faces and of alignment of matching profiles.

CLEANING AND PROTECTING

Damaged Units: Replace panels and other components of the Work that have been damaged or have deteriorated beyond successful repair by finish touchup or similar minor repair procedures.

Cleaning: Remove temporary protective coverings and strippable films, if any, as soon as each panel is installed. On completion of panel installation, clean finished surfaces as recommended by panel manufacturer and maintain in a clean condition during construction.

END OF SECTION 07411

07550 – MODIFIED BITUMEN MEMBRANE ROOFING

PART 1 GENERAL

1.01 GENERAL REQUIREMENTS

A. Drawings and general provisions of the Contract, including General and Supplementary Conditions and Division 1 Specification Sections, apply to this Section.

B. Deviations: In the event this Specification deviates from the manufacturer's current specification, this specification prevails, except where they conflict with the manufacturer's requirements for the specified guarantee. In this case, the manufacturer's specification prevails.

C. Specification Amendments: Drawings, addenda and modifications may be issued subsequent to the printing of this Specification.

D. Contractor Acceptance: Prior to the project start, ascertain that all aspects of this Specification and possible modifications are workable and do not conflict with the manufacturer's requirements for the specified guarantee. Upon commencement of the work, it will be presumed that this Specification and drawings, addenda and modifications are satisfactory to both the Contractor and the manufacturer in their entirety.

E. Supplied Materials: Supply all materials of the roofing system, including accessory products. The bidding Contractor, by making his bid, represents that his bid price is based on the use of the materials listed in Part 2 Products. Refer to Part 1.03 Description of Work for specific use within each roofing assembly outlined.

1.02 REFERENCE STANDARDS

References in these specifications to standards, test methods, and codes, are implied to mean the latest edition of each such standard adopted. The following is an abbreviated list of associations, institutions, and societies which may be used as references throughout these specifications.

ASTM	American Society for Testing and Materials Philadelphia, PA
FM	Factory Mutual Engineering and Research Norwood, MA
NRCA	National Roofing Contractors Association Rosemont, IL
OSHA	Occupational Safety and Health Administrations Washington, DC
SMACNA	Sheet Metal and Air Conditioning Contractors National Association Chantilly, VA
UL	Underwriters Laboratories Northbrook, IL

CCRC Cool Roof Rating Council
Oakland, CA

1.03 DESCRIPTION OF WORK

The basic work descriptions (components, layering and attachment methods) required in this specification are referenced below.

Siplast Roof System Specification #: 2030 WSH

Project Type: New

Deck: Metal

Slope: Positive Drainage

Slope: Minimum 1/8 inch per foot. – See Drawings

Roof System: Siplast Paradiene 20 TG mid sheet torch applied.

Siplast Paradiene 30 CR FR TG granual cap torch applied.

Flashing system: Siplast Veral Aluminum, torch applied.

Specialty Flashing System: Siplast Parapro 123 Catalyzed Acrylic Resin Flashing System - fully adhere.

1.04 QUALITY ASSURANCE

A. Acceptable Products: Primary roofing products, including each type of sheet, all manufactured in the United States, shall be supplied by a single manufacturer which has been successfully producing the specified types of primary products for not less than 10 years. The primary roofing products shall have maintained a consistent composition for a minimum of five years.

B. Product Quality Assurance Program: Primary roofing materials shall be manufactured under a quality management system that is monitored regularly by a third party auditor under the ISO 9001:2000 audit process. A certificate of analysis for reporting/confirming the tested values of the actual material being supplied for the project will be required prior to project close-out.

C. Agency Approvals: The proposed roof system shall conform to the following requirements. No other testing agency approvals will be accepted.

1. Underwriters Laboratories Class A acceptance of the proposed roofing system (including mopping asphalt or cold adhesive) without additional requirements for gravel or coatings.

2. Factory Mutual Approval Standard 4470 listing for the proposed membrane system. The roof membrane configuration shall be approved by FM for Class 1-SH (severe hail) exposure. The roof configuration (including fastening of base sheet or insulation) shall be approved by FM for minimum 1-150 windstorm construction.

D. Acceptable Contractor: Contractor shall have a minimum of 2 years experience in successfully installing the same or similar roofing materials and be certified in writing by the roofing materials manufacturer to install the primary roofing products.

E. Scope of Work: The work to be performed under this specification shall include but is not limited to the following: Attend necessary job meetings, furnish competent and full time supervision, experienced roof mechanics, all materials (unless noted otherwise), tools, and equipment necessary to complete, in an acceptable manner, the roof installation in accordance with this specification. Comply with the latest written application instructions of the manufacturer of the primary roofing products. In addition, application practice shall comply with requirements and recommendations contained in the latest edition of the Handbook of Accepted Roofing Knowledge (HARK) as published by the National Roofing Contractor's Association, amended to include the acceptance of a phased roof system installation.

F. Local Regulations: Conform to regulations of public agencies, including any specific requirements of the city and/or state of jurisdiction.

G. Manufacturer Requirements: Ensure that the primary roofing materials manufacturer provides direct trained company personnel to attend necessary job meetings, perform periodic inspections as necessary, and conduct a final inspection upon successful completion of the project.

1.05 GUARANTEE/WARRANTY

A. Roof System Guarantee (Siplast 20 Year Roof System Guarantee): Upon successful completion of the project, and after all post installation procedures have been completed, furnish the Owner with the roof system manufacturer's 20 year labor and materials roof system guarantee. The roof system guarantee shall include both the roofing and flashing membranes, and the specified new lightweight insulating concrete system consisting of aggregate fill, patented-pre-formed polystyrene panels, and base sheet fasteners. All repair or replacement costs covered under the guarantee shall be borne by the roofing membrane manufacturer. The guarantee shall be a term type, without deductibles or limitations on coverage amount, and be issued at no additional cost to the Owner. Specific items covered under the roof system guarantee include:

1. The actual resistance to heat flow through the roof insulation will be at least 80% of the design thermal resistance, provided that the roofing membrane is free of leaks;

2. The roof insulation will remain in a reroofable condition should the roof membrane require replacement (excluding damage caused by fastener pullout during removal of the old membrane.)

3. The roof insulation will remain in place even if the roof membrane sustains wind damage covered by the guarantee.

1.06 SUBMITTALS

All submittals which do not conform to the following requirements will be rejected.

A. Submittals following Contract Award:

1. Letter from the proposed primary roofing manufacturer confirming that the bidder is an acceptable Contractor authorized to install the proposed system.

2. Letter from the primary roofing manufacturer stating that the proposed application will comply with the manufacturer's requirements in order to qualify the project for the specified guarantee.

B. Submittals Prior to Project Close-out:

1. Manufacturer's printed recommendations for proper maintenance of the specified roof system including inspection frequencies, penetration addition policies, temporary repairs, and leak call procedures.

1.07 PRODUCT DELIVERY STORAGE AND HANDLING

A. Delivery: Deliver materials in the manufacturer's original sealed and labeled containers and in quantities required to allow continuity of application.

B. Storage: Store materials out of direct exposure to the elements. Store roll goods on a clean, flat and dry surface. All material stored on the roof overnight shall be stored on pallets. Rolls of roofing must be stored on ends. Store materials on the roof in a manner so as to preclude overloading of deck and building structure. Store materials such as solvents, adhesives and asphalt cutback products away from open flames, sparks or excessive heat. Cover all material using a breathable cover such as a canvas. Polyethylene or other non-breathable plastic coverings are not acceptable.

C. Handling: Handle all materials in such a manner as to preclude damage and contamination with moisture or foreign matter. Handle rolled goods to prevent damage to edges or ends.

D. Damaged Material: Any materials that are found to be damaged or stored in any manner other than stated above will be automatically rejected, removed and replaced at the Contractor's expense.

1.08 PROJECT/SITE CONDITIONS

A. Requirements Prior to Job Start

1. Notification: Give a minimum of 5 days notice to the Owner and manufacturer prior to commencing any work and notify both parties on a daily basis of any change in work schedule.

2. Permits: Obtain all permits required by local agencies and pay all fees which may be required for the performance of the work.

3. Safety: Familiarize every member of the application crew with all fire and safety regulations recommended by OSHA, NRCA and other industry or local governmental groups.

B. Environmental Requirements

1. Precipitation: Do not apply roofing materials during precipitation or in the event there is a probability of precipitation during application. Take adequate precautions to

ensure that materials, applied roofing, and building interiors are protected from possible moisture damage or contamination.

C. Protection Requirements

1. Membrane Protection: Provide protection against staining and mechanical damage for newly applied roofing and adjacent surfaces throughout this project.

2. Torch Safety: Designate one person on each crew to perform a daily fire watch. The designated crew member shall watch for fires or smoldering materials on all areas of roof construction Continue the fire watch after roofing material application has been suspended for the day.

3. Limited Access: Prevent access by the public to materials, tools and equipment during the course of the project.

4. Debris Removal: Remove all debris daily from the project site and take to a legal dumping area authorized to receive such materials.

5. Site Condition: Complete, to the owner's satisfaction, all job site clean-up including building interior, exterior and landscaping where affected by the construction.

6. Asbestos Containing Roofing Materials – Removal: Remove and dispose of any and all asbestos materials including asbestos containing roof materials (ACRM) in a manner which creates no hazard to the workers, the building occupants, or the environment. Follow local, state and federal laws, codes and ordinances during handling, demolition, removal and dumping of ACRM. Provide permits and certification letters in order to comply with all local, state and federal regulations pertaining to this project.

D. Removal of existing and installation of temporary and permanent roof systems shall be performed in a manner to avoid disruption of the use and operation of the building.

PART 2 PRODUCTS

2.01 DESCRIPTION OF SYSTEMS

A. Roofing Membrane Assembly (Siplast Paradiene 20 TG/30 CR FR TG roof system): A roof membrane assembly consisting of two plies of a prefabricated, reinforced, homogeneous Styrene-Butadiene-Styrene (SBS) block copolymer modified asphalt membrane, applied over a prepared substrate. Both reinforcement mats shall be impregnated/saturated and coated each side with an SBS modified bitumen blend. The roof system shall pass 500 cycles of ASTM D 5849 Resistance to Cyclic Joint Displacement (fatigue) at 14°F (-10°C). Passing results shall show no signs of membrane cracking or interply delamination after 500 cycles. The roof system shall pass 200 cycles of ASTM D 5849 after heat conditioning performed in accordance with ASTM D 5147. The assembly shall possess waterproofing capability, such that a phased roof application, with only the modified bitumen base ply in place, can be achieved for prolonged periods of time without detriment to the watertight integrity of the entire roof system.

1. Modified Bitumen Base and Stripping Ply (Siplast Paradiene 20 – torchable grade):

a) Thickness (avg): 114 mils (2.9 mm) (ASTM D 5147)
b) Thickness (min): 110 mils (2.8 mm) (ASTM D 5147)
c) Weight (min per 100 ft² of coverage): 76 lb (3.7 kg/m²)
d) Maximum filler content in elastomeric blend: 35% by weight
e) Low temperature flexibility @ -13º F (-25º C) - PASS (ASTM D 5147)
f) Maximum Load (avg) @ 73ºF (23ºC): 30 lbf/inch (5.3 kN/m) (ASTM D 5147)
g) Maximum Load (avg) @ 0ºF (-18ºC): 75 lbf/inch (13.2 kN/m) (ASTM D 5147)
h) Elongation @ 5% Maximum Load (avg.) @ 73ºF (23ºC): 50% (ASTM D 5147)
i) Dimensional Stability (max): 0.1% (ASTM D 5147)
j) High Temperature Stability (min): 250ºF (121ºC) (ASTM D 5147)
k) Approvals: UL Class listed, FM Approved (products shall bear seals of approval)
l) Reinforcement: fiberglass mat or other meeting the performance and dimensional stability criteria

2. Modified Bitumen Finish Ply (Siplast Paradiene 30 CR FR – torchable grade):

a) Thickness (avg): 180 mils (3.8 mm) (ASTM D 5147)
b) Thickness at selvage (coating thickness) (avg): 118 mils (3.0 mm) (ASTM D 5147)
c) Thickness at selvage (coating thickness) (min): 114 mils (2.9 mm) (ASTM D 5147)
d) Weight (min per 100 ft² of coverage): 112 lb (5.4 kg/m²)
e) Maximum filler content in elastomeric blend: 35% by weight
f) Low temperature flexibility @ -13ºF (-25ºC): PASS (ASTM D 5147)
g) Maximum Load (avg) @ 73ºF (23ºC): 30 lbf/inch (5.3 kN/m) (ASTM D 5147)
h) Maximum Load (avg) @ 0ºF (-18ºC): 75 lbf/inch (13.2 kN/m) (ASTM D 5147)
i) Elongation @ 5% Maximum Load (avg.) @ 73ºF (23ºC): 55% (ASTM D 5147)
j) Dimensional Stability (max): 0.1% (ASTM D 5147)
k) High Temperature Stability (min): 250ºF (121º C) (ASTM D 5147)
l) Granule Embedment (max loss): 2.0 grams per sample (ASTM D 5147)
m) Approvals: UL Class listed, FM Approved (products shall bear seals of approval)
n) Reinforcement: fiberglass mat or other meeting the performance and dimensional stability criteria
o) Surfacing: ceramic granules (white synthetic chips)

B. Flashing Membrane Assembly (Siplast Veral flashing system, aluminum finish): A flashing membrane assembly consisting of a prefabricated, reinforced, Styrene-Butadiene-Styrene (SBS) block copolymer modified asphalt membrane with a continuous, channel-embossed metal-foil surfacing. The finish ply shall conform to ASTM D 6298 and the following physical and mechanical property requirements.

1. Metal-Clad Modified Bitumen Flashing Sheet (Siplast Veral Aluminum):

a) Thickness (avg): 142 mils (3.6 mm) (ASTM D 5147)
b) Thickness (min): 138 mils (3.5 mm) (ASTM D 5147)
c) Weight (min per 100 ft² of coverage): 92 lb (4.5 kg/m²)
d) Coating Thickness – back surface (min): 40 mils (1 mm) (ASTM D 5147)
e) Maximum filler content in elastomeric blend: 35% by weight
f) Low temperature flexibility @ 0º F (-18º C): PASS (ASTM D 5147)
g) Maximum Load (avg) @ 73ºF (23ºC): 85 lbf/inch (15 kN/m) (ASTM D 5147)
h) Maximum Load (avg) @ 0ºF (-18ºC): 180 lbf/inch (31.7 kN/m) (ASTM D 5147)
i) Elongation @ 5% Maximum Load (avg) @ 73ºF (23ºC): 45% (ASTM D 5147)
j) Tear-Strength (avg): 120 lbf (0.54 kN) (ASTM D 5147)

k) Dimensional Stability (max): 0.2% (ASTM D 5147)
l) High Temperature Stability (min): 225ºF (107ºC) (ASTM D 5147)
m) Cyclic Thermal Shock Stability (maximum): 0.2% (ASTM D 6298)
n) Approvals: UL Approved, FM Approved (products shall bear seals of approval)
o) Reinforcement: fiberglass scrim mat or other meeting the performance and dimensional stability criteria
p) Surfacing: aluminum metal foil

C. Flashing Reinforcing Ply - (Same as roof system base ply – refer to Section 07550 – 2.02.A.1.)

D. Catalyzed Acrylic Resin Flashing System (Parapro 123 Flashing System by Siplast/Icopal; Irving, TX): A specialty flashing system consisting of a liquid-applied, fully reinforced, multi-component acrylic membrane installed over a prepared or primed substrate. The flashing system consists of a catalyzed acrylic resin primer, basecoat and topcoat, combined with a non-woven polyester fleece. The resin and catalyst are pre-mixed immediately prior to installation. The use of the specialty flashing system shall be specifically approved in advance by the membrane manufacturer for each application.

2.02 ROOFING ACCESSORIES

A. Bituminous Cutback Materials

1. Primer (Siplast PA-1125 Asphalt Primer by Siplast / Icopal; Irving, TX): A high flash, quick drying, asphalt solvent blend which meets or exceeds ASTM D 41 requirements.

2. Mastics (Siplast PA-1021 Plastic Cement by Siplast / Icopal; Irving, TX): An asphalt cutback mastic, reinforced with non-asbestos fibers, used as a base for setting metal flanges conforming to ASTM D 4586 Type II requirements.

B. Caulking/Sealants (Siplast PS-304 Elastomeric Sealant by Siplast / Icopal; Irving, TX): A moisture-curing, non-slump elastomeric sealant designed for roofing applications. The sealant shall be approved by the roof membrane manufacturer for use in conjunction with the roof membrane materials. Acceptable types are as follows:

C. Ceramic Granules: No. 11 grade specification ceramic granules of color scheme matching the granule surfacing of the finish ply.

D. Metallic Powder: A finely graded metal dust as supplied or approved by the membrane manufacturer, used for covering of bitumen overruns over the foil surfaced membrane.

E. Perlite Cant Strips: A cant strip composed of expanded volcanic minerals combined with waterproofing binders. The top surface shall be pre-treated with an asphalt based coating. The face of the cant shall have a nominal 4 inch dimension.

F. Fasteners

1. Base Sheet Fasteners: Base sheet fasteners shall be approved by the manufacturer of the primary roofing products. Acceptable base sheet fasteners for specific substrate types are listed below.

a. Wood Nailer Fasteners (Tapper Concrete Screws by Powers Fastener, Inc.):

- Stainless steel screws, nominal 1/4 inch diameter, providing for a minimum 1 inch embedment. Fasteners in 6 inch or wider lumber should be installed in 2 rows staggered 1/3 of the nailer
  width. Maximum 12 inch o.c. spacing between adjacent fastener rows at the perimeter, 6 inches o.c. at the corners. Corner fastener spacing should extend 8 feet from all outside building comers. Install 2 fasteners within 6 inches of each nailer end.

2.03 RELATED COMPONENTS

A. Rough Carpentry: Lumber used for nailers, curbs, and cants shall be No. 2 kiln dried (19% maximum moisture content after treatment), grade marked, and surfaced on four sides. Lumber shall be salt treated with Wolman Salts (wood shall retain 0.25 lbs. dry salt per cubic foot of wood) or an approved equal.

   1. Perimeter Nailers for Edge Metal Securement. Lumber shall have a nominal 6 inch width with a thickness to match the height of the new insulation assembly.

B. Perlite Cant Strips: A cant strip composed of expanded volcanic minerals combined with waterproofing binders. The top surface shall be pre-treated with an asphalt based coating. The face of the cant shall have a nominal 4 inch dimension.

C. Moisture Relief Vents For Lightweight Insulating Concrete Substrates: Insulated, spun aluminum roof vents having a one-way valve design. An acceptable type is the Aluminum Insulvent (one-way) by Marathon Roofing Products, Inc. Note that roof vents constructed of plastic are not acceptable.

D. Lead Drain Flashings: Formable type, weighing a minimum of 4 lb. per square foot; in sheets of minimum 30 inch x 30 inch dimension.

E. Lead Pipe Flashings: Preformed from sheet stock weighing a minimum of 4 lb. per square foot, and soldered with a minimum 4 inch perimeter flange with a sleeve opening fabricated to fit closely around the penetration without forcing. Lead sleeve length shall be of sufficient height to allow a minimum of 1 inch to be crimped inside of the pipe stack.

F. Fabricated Metal (Refer to Sections 07600 and 07620): Fabricate all metal components to be used in conjunction with the roof system using material specified, detailed and approved.

   1. Metal Edge/Fascia: Fabricate metal edge/fascia incorporating a 4 inch perimeter flange with a minimum 1/4 inch gravel stop rise. The fascia shall be of sufficient width to adequately cover the roof assembly/wall juncture. The bottom edge of the fascia shall have a minimum 1/2 inch drip edge, hemmed and formed at 30 degrees and shall be fabricated for attachment to a continuous cleat at the outside base of the nailer. Fabricate metal edge/fascia in maximum 10 feet sections. Fabricate corner pieces of metal edge fascia with 1 foot sections in either direction from the corner. Fabricate cover plates and accessory components in accordance with SMACNA guidelines.

2. Metal Pipe Flashings: Fabricate metal pipe flashings in a two-component assembly in accordance with the following:

   - The first component shall be a metal roof jack having a minimum 4 inch perimeter flange, and a sleeve opening to fit closely around the penetration without forcing, with a minimum 6 inch height. Fasten and solder metal laps.

   - The second component shall be a metal, water tight umbrella, fabricated to be mechanically secured tightly around the roof penetration and extend beyond the roof jack opening by a minimum radius of 3 inches. Caulk top edge of the watertight umbrella using an approved sealant.

PART 3 EXECUTION

3.01 FIELD QUALITY CONTROL

A. Pre-Job Conference: Conduct a pre-job conference to include the designer, Owner, roofing Contractor and manufacturer's representative prior to application of roofing.

B. Foremen: Provide the roofing foreman with a copy of these specifications to be available at the job site at all times. The presence of specifications and an inspector shall not relieve the Contractor of strict compliance with the manufacturer's specifications, detail drawings, and/or approved material requirements.

C. Deck Penetrations: Verify that work penetrating the roof deck, or which may otherwise affect the roofing application, has been properly completed.

D. Final Inspection – post installation meeting: Arrange a meeting at the completion of the project to be attended by all parties that were present at the pre-job conference. A punch list of items required for completion shall be compiled by the Contractor and the manufacturer's representative. Complete, sign, and mail the punch list form to the manufacturer's headquarters.

3.02 SUBSTRATE REQUIREMENTS

A. Roof Decks: Structural roof decks should properly provide sufficient strength to support anticipated dead and live loads and normal construction traffic without excessive deflection or movement. All openings, walls or projections through the roof deck should be completed before application of the roof membrane is begun. Necessary deck repairs should be made according to the deck manufacturer's specifications following best established practices.

3.03 SUBSTRATE PREPARATION

A. Perimeter Wood Nailers: Install perimeter wood nailers in accordance with the guidelines set forth in latest edition of Factory Mutual Loss Prevention Bulletin 1-49.

B. Base Sheet Securement to Prepared Substrate: Lay the base sheet over the entire area to be roofed, lapping sides 3 inches and ends 6 inches. Using the specified fasteners, fasten each sheet every 7 inches through laps and stagger fasten the remainder of the sheet in 3 rows on nominal 9 inch centers with fasteners in each row on 10 inch centers. Increase the fastening pattern at the corners/perimeter in accordance with the recommendations set forth in Factory Mutual Loss Prevention Bulletin 1-29.

3.04 ROOF MEMBRANE INSTALLATION - GENERAL

A. Membrane Application: Apply roofing in accordance with roofing system manufacturer's instructions and the following requirements. Application of roofing membrane components shall immediately follow application of base sheet and/or insulation as a continuous operation.

B. Aesthetic Considerations: An aesthetically pleasing overall appearance of the finished roof application is a standard requirement for this project. Make necessary preparations, utilize recommended application techniques, apply the specified materials including granules and metallic powder, and exercise care in ensuring that the finished application is acceptable to the Owner.

C. Priming: Prime metal and concrete and masonry surfaces with a uniform coating of the specified asphalt primer.

D. Bitumen Consistency: Cutting or alterations of bitumen, primer, and sealants will not be permitted.

E. Roofing Application: Apply all layers of roofing free of wrinkles, creases or fishmouths. Exert sufficient pressure on the roll during application to ensure prevention of air pockets.

1. Apply all layers of roofing perpendicular to the slope of the deck.

2. Fully bond the base ply to the prepared substrate, utilizing minimum 3 inch side and end laps. Apply each sheet directly behind the torch applicator. Cut a dog ear angle at the end laps on overlapping selvage edges. Using a clean trowel, apply top pressure to top seal T-laps immediately following sheet application. Stagger end laps a minimum of 3 feet.

3. Fully bond the finish ply to the base ply, utilizing minimum 3 inch side and end laps. Apply each sheet directly behind the torch applicator. Stagger end laps of the finish ply a minimum 3 feet. Cut a dog ear angle at the end laps on overlapping selvage edges. Using a clean trowel, apply top pressure to top seal T-laps immediately following sheet application. Stagger side laps of the finish ply a minimum 12 inches from side laps in the underlying base ply. Stagger end laps of the finish ply a minimum 3 feet from end laps in the underlying base ply.

4. Maximum sheet lengths and special fastening of the specified roof membrane system may be required at various slope increments where the roof deck slope exceeds 1/2 inch per foot. The manufacturer shall provide acceptable sheet lengths and the required fastening schedule for all roofing sheet applications to applicable roof slopes.

F. Granule Embedment: Broadcast mineral granules over all bitumen overruns on the finish ply surface, while the bitumen is still hot or the adhesive is soft, to ensure a monolithic surface color.

G. Flashing Application - masonry surfaces: Flash masonry parapet walls and curbs using the reinforcing sheet and the metal foil flashing membrane. After the base ply has been applied to the top of the cant, fully adhere the reinforcing sheet, utilizing minimum 3 inch

side laps and extend a minimum of 3 inches onto the base ply surface and 3 inches up the parapet wall above the cant. After the final roofing ply has been applied to the top of the cant, prepare the surface area that is to receive flashing coverage by torch heating granular surfaces or by application of asphalt primer; allowing primer to dry thoroughly. Torch apply the metal foil-faced flashing into place using three foot widths (cut off the end of roll) always lapping the factory selvage edge. Stagger the laps of the metal foil flashing layer from lap seams in the reinforcing layer. Extend the flashing sheet a minimum of 4 inches beyond the toe of the cant onto the prepared surface of the finished roof and up the wall to the desired flashing height. Exert pressure on the flashing sheet during application to ensure complete contact with the wall/roof surfaces, preventing air pockets; this can be accomplished by using a damp sponge or shop rag. Check and seal all loose laps and edges. Nail the top edge of the flashing on 9 inch centers. (See manufacturer's schematic for visual interpretation).

H. Flashing Application - wood surfaces: Flash wood or plywood parapet walls and curbs using the reinforcing sheet and the metal foil flashing membrane. The reinforcing sheet shall have minimum 3 inch side laps and extend a minimum of 3 inches onto the base ply surface and to the top of the parapet wall or curb. Nail the reinforcing sheet through the field of the sheet to the vertical wood surface on 12 inch centers from the top of the cant to top of the wall or curb. Fully adhere the remainder of the flashing reinforcing sheet that extends over the cant and roof level. After the final roofing ply has been applied to the top of the cant, prepare the surface area that is to receive flashing coverage by torch heating granular surfaces or by application of asphalt primer; allowing primer to dry thoroughly. Torch apply the metal foil-faced flashing into place using three foot widths (cut off the end of roll) always lapping the factory selvage edge. Extend the flashing sheet a minimum of 4 inches beyond the toe of the cant onto the prepared surface of the finished roof and up the wall to the desired flashing height. Exert pressure on the flashing sheet during application to ensure complete contact with the wall/roof surfaces, preventing air pockets; this can be accomplished by using a damp sponge or shop rag. Check and seal all loose laps and edges. Nail the top edge of the flashing on 9 inch centers. (See manufacturer's schematic for visual interpretation).

I. Use of Metallic Powder: Broadcast metallic powder over all bitumen overruns on the metal foil membrane surface while the bitumen is still hot to ensure a monolithic surface color.

J. Water Cut-Off: At end of day's work, or when precipitation is imminent, construct a water cut-off at all open edges. Cut-offs can be built using asphalt or plastic cement and roofing felts, constructed to withstand protracted periods of service. Cut-offs must be completely removed prior to the resumption of roofing. Maintain roof drains in operation at all times. Provide sump pumps as needed to remove standing water.

K. Catalyzed Acrylic Resin Flashing System: Install the liquid-applied primer and flashing system in accordance with the membrane system manufacturer’s printed installer’s guidelines and other applicable written recommendations as provided by the manufacturer.

3.05 RELATED COMPONENTS - INSTALLATION

The following is a list of verbal descriptions for correct installation of components integrated into the roof membrane assembly. In all cases, unless otherwise approved, incorporate flanged components into the system between the application of the base ply and the finish ply. Prime the flange with a uniform coating of approved ASTM D 41 asphalt primer and allow to dry thoroughly; all flanges must be set in the specified mastic.

A. Edge Metal (coordination with Sections 07600 and 07620): Completely prime metal flanges and allow to dry prior to installation. Turn the base ply down 2 inches past the roof edge and over the nailer. After the base ply and continuous cleat (if applicable) have been installed, set the flange in mastic and stagger nail every 3 inches on center. Strip-in the flange using the stripping-ply material, extending a minimum of 4 inches beyond the edge of the flange. Terminate the finish ply at the gravel-stop rise of the edge metal. Refer to Section 07550 – 3.06.G, Sealant, for completion of this work.

B. Lead Pipe Flashings: Completely prime the lead flanges and allow to dry prior to installation. After the base ply has been applied, set the flange in mastic and strip-in the flange using the stripping-ply material, extending a minimum of 4 inches beyond the edge of the flange. Terminate the finish ply at the flange-sleeve juncture of the pipe flashing. Refer to Section 07550 – 3.06.G, Sealant, for completion of this work.

C. Lead Drain Flashings: Completely prime the lead drain flashing and allow to dry prior to installation. After the base ply has been applied, set the lead flashing sheet in mastic and form to turn down inside of the drain bowl. Ply-in the perimeter of the lead flashing using an additional layer of the base ply material, overlapping the perimeter of the lead a minimum of 4 inches. Terminate the finish ply to extend beneath the clamping ring seal. Install the clamping ring with all bolts in place.

D. Roof Moisture Relief Vents – non-vented lightweight insulating concrete substrates: Completely prime the metal flanges and allow to dry prior to installation. After the base ply has been applied, mark the venting designations. Cut a 2 diameter core from the roof assembly down to the top surface of the embedded Insulperm expanded polystyrene panels. Fill the resulting void with fiberglass insulation. Set the vent flange in mastic, centered over the core cut. Strip-in the flange using the stripping-ply material, extending a minimum of 4 inches beyond the edge of the flange. Terminate the finish ply at the flange-throat juncture of the vent. Refer to Section 07550 – 3.06.G, Sealant, for completion of this work.

E. Metal Pipe Flashings: Completely prime the metal pipe flanges and allow to dry prior to installation. After the base ply has been applied, set the flanges in mastic and strip-in the flange using the stripping-ply material, extending a minimum of 4 inches beyond the edge of the flange. Terminate the finish ply at the flange-sleeve juncture of the pipe flashing. Install a watertight umbrella to the penetration, completely covering the opening of the pipe flashing. Refer to Section 07550 – 3.06.G, Sealant, for completion of this work.

F. Walktread: Cut the walktread into maximum 5 foot lengths and allow to relax until flat. Adhere the sheet using the specified plastic cement. Apply the specified cement in a 3/8 inch thickness to the back of the product in 5 inch by 5 inch spots in accordance with the pattern as supplied by the walktread manufacturer. Walk-in each sheet after application to ensure proper adhesion. Use a minimum spacing of 2 inches between sheets to allow for proper drainage.

G. Sealant: Apply a smooth continuous bead of the specified sealant at the exposed finish ply edge transition to metal flashings incorporated into the roof system.

3.06 SPECIAL CONDITIONS

A. Site Condition: Leave all areas around job site free of debris, roofing materials, equipment and related items after completion of job.

B. Notification Of Completion: Notify the manufacturer by means of manufacturer's printed Notification of Completion form of job completion in order to schedule a final inspection date.

C. Final Inspection

1. Post-Installation Meeting: Hold a meeting at the completion of the project, attended by all parties that were present at the pre-job conference. A punch list of items required for completion shall be compiled by the Contractor and the manufacturer's representative. Complete, sign, and mail the punch list form to the manufacturer's headquarters.

D. Issuance Of The Guarantee: Complete all post installation procedures and meet the manufacturer's final endorsement for issuance of the specified guarantee.

END OF SECTION 07550

SECTION 07600 - PREFABRICATED FASCIAS AND COPINGS

PART 1 GENERAL

1.01 SUMMARY:

A. Work included: furnishing and installing factory fabricated and finished gravel stop (Fascias), and coping systems.

1.03 RELATED DOCUMENTS AND SECTIONS:

A. Drawings and general provisions of the Contract, including General and Supplementary Conditions and Division 1 Specification Sections, apply to this Section.

B. Section 06100 - Rough Carpentry

C. Section 07550 – Modified Bitumen Membrane Roofing

1.04 REFERENCE STANDARDS

References in these specifications to standards, test methods, codes etc., are implied to mean the latest edition of each such standard adopted. The following is an abbreviated list of associations, institutions, and societies which may be used as references throughout these specifications.

FM FM Global Research, Norwood, MA

1.05 SUBMITTALS

A. Submittals following Contract Award:

1. Latest edition of the prefabricated metal component supplier’s specification.

2. Latest edition of prefabricated metal component supplier’s Installer’s Guide for gravel stop, coping, and fascia extender systems.

3. Samples: Available on request; sized to represent metal components adequately.

4. Copy of the roofing system manufacturer's inclusion addendum offering coverage of the prefabricated gravel stop, coping, and fascia extender systems under the standard terms of the roofing guarantee.

5. Evidence that the prefabricated gravel stop, coping, and fascia extender systems meets FM Global Research Class 1-105 (copings) and I-90 (fascias) Windstorm Classification for Roof Perimeter Fascia Systems.

1.06 QUALITY ASSURANCE

A. Agency Approvals: The proposed prefabricated metal component shall conform to the following requirements. No other testing agency approvals will be accepted.

1. FM Global Research approval for Class 1-105 (copings) and I-90 (fascias) Windstorm Classification for Roof Perimeter Fascia Systems.

B. Scope of Work: The work to be performed under this specification shall include but is not limited to the following: Attend necessary job meetings, furnish competent and full time supervision, experienced mechanics, all materials, tools, and equipment necessary to complete, in an acceptable manner, the prefabricated metal installation in accordance with this specification. Comply with the latest written application instructions of the supplier of the prefabricated metal components.

C. Local Regulations: Conform to regulations of public agencies, including any specific requirements of the city and/or state of jurisdiction.

D. Manufacturer Requirements: Ensure that the prefabricated metal component supplier provides direct trained company personnel to attend necessary job meetings, perform periodic inspections as necessary, and conducts a final inspection upon successful completion of the project.

1.07 PRODUCT DELIVERY STORAGE AND HANDLING

A. Delivery: Deliver materials in the manufacturer's original sealed and labeled. Labeled containers.

B. Storage: Store materials out of direct exposure to the elements.

C. Plastic Surface Film: Do not remove the plastic surface film on the metal component until after it is installed.

D. Damaged Material: Any materials that are found to be damaged will be automatically rejected, removed and replaced at the Contractor's expense.

1.08 PROJECT/SITE CONDITIONS

A. Requirements Prior to Job Start

1. Verify that all other trades responsible for related work are complete prior to installing the prefabricated metal components..

2. Mounting surfaces shall be straight and secure and provide adequate widths to properly support the prefabricated metal component.

3. Safety: Familiarize every member of the application crew with all safety regulations recommended by OSHA, SMACNA and other industry or local governmental groups.

B. Protection Requirements

1. Prefabricated Metal Component Protection: Provide protection against mechanical damage for newly applied prefabricated metal component surfaces throughout the project.

2. Limited Access: Prevent access by the public to materials, tools and equipment during the course of the project.

3. Debris Removal: Remove all debris daily from the project site.

4. Site Condition: Complete, to the owner's satisfaction, all job site clean-up including building interior, exterior and landscaping where affected by the construction.

1.09 GUARANTEE/ ADDENDUM

A. Roof Membrane Guarantee Addendum ("Siplast/Icopal Paraguard Edge Metal/Coping System Inclusion Addendum"): In addition to the specified guarantee, furnish the Owner with the roofing manufacturer's inclusion addendum to the guarantee offering coverage of the prefabricated gravel stop, coping, and fascia extender systems under the standard terms of the roof membrane/system guarantee.

PART 2 PRODUCTS

2.01 PREFABRICATED METAL COMPONENT SUPPLIER

A. Siplast/Icopal
1000 East Rochelle Blvd.
Irving, TX 75062
(800) 922-8800

B. Prefabricated Coping Metal System (Paraguard Coping Metal System, by Siplast/Icopal, Inc., Irving, TX): Coping metal components shall be factory fabricated according to the requirements of the roofing membrane manufacturer. The coping metal system shall consist of the following components:

- Factory formed anchor/cleat plates fabricated from 20 gauge, G90 galvanized steel.

- Factory formed gutter/splice plates fabricated from 0.032" aluminum with EPDM sealing gaskets.

- A factory formed coping cap fabricated from 0.050" aluminum (aluminum alloy 3003 H-14) having a mill-finish, a coping cap length of 10 ft, a width of 14.5 and approximately 18 inches, a custom vertical face leg of approximately 9 inches, and a vertical back leg of 3 ¾ inches. Verify dimensions prior to fabrication and adjust accordingly. Refer to Section 07550 – 2.04.F.

- Factory formed welded corner starters, miter corners and end caps.

C. Prefabricated Gravel Stop (Proform Gravel Stop, by Siplast, Inc., Irving, TX): Prefabricated gravel stop components shall be factory formed according to the requirements of the membrane manufacturer. The gravel stop system shall consist of the following components:

- A factory formed retainer cleat with pre-punched nail holes, fabricated from 24 gauge, G90 galvanized steel, secured using galvanized roofing nails.

- A factory formed gravel stop with pre-punched nailing holes, secured using galvanized roofing nails, fabricated from 0.050" aluminum (aluminum alloy 3003 H-14) having a mill-finish and a custom vertical fascia height of approximately 9 inches. Verify dimensions prior to fabrication and adjust accordingly. Refer to Section 07550 – 2.04.F.

- Factory formed concealed splice plates.
- Factory formed welded corners and miter corners.

PART 3 EXECUTION

3.01 PREFABRICATED METAL COMPONENT INSTALLATION

A. Reference "Paraguard Perimeter Coping System" and "Proform Gravel Stop System" Installer's Guide for Installation Procedures.

3.02 FIELD QUALITY CONTROL AND INSPECTIONS

A. Site Condition: Leave all areas around job site free of debris, construction materials, equipment and related items after completion of job.

B. Issuance Of The Addendum to the Roof Membrane/System Guarantee: Complete all post installation procedures and comply with the prefabricated metal suppliers final endorsement for issuance of the addendum to the specified roofing guarantee.

END OF SECTION 07600

SECTION 07620 - SHEET METAL FLASHING AND TRIM

PART 1 - GENERAL

RELATED DOCUMENTS

Drawings and general provisions of the Contract, including General and Supplementary Conditions and Division 1 Specification Sections, apply to this Section.

SUMMARY

This Section includes sheet metal flashing and trim in the following categories:

Metal flashings and drip edges.
Exhaust hood.

Related Sections: The following Sections contain requirements that relate to this Section:

Division 6 Sections for wood blocking and nailers.

Division 7 Roofing Sections for flashing and roofing accessories installed integral with roofing membrane as part of roofing-system work.

PERFORMANCE REQUIREMENTS

General: Install sheet metal flashing and trim to withstand wind loads, structural movement, thermally induced movement, and exposure to weather without failing.

Fabricate and install flashings at roof edges to comply with recommendations of FM Loss Prevention Data Sheet 1-49 for the following wind zone:

Wind Zone: To meet all current applicable codes for conditions present at project location.

SUBMITTALS

General: Submit each item in this Article according to the Conditions of the Contract and Division 1 Specification Sections.

Product Data including manufacturer's material and finish data, installation instructions, and general recommendations for each specified flashing material and fabricated product.

Shop Drawings of each item specified showing layout, profiles, methods of joining, and anchorage details.

Samples of sheet metal flashing, trim, and accessory items, in the specified finish. Where finish involves normal color and texture variations, include Sample sets composed of 2 or more units showing the full range of variations expected.

8-inch- (200-mm-) square Samples of specified sheet materials to be exposed as finished surfaces.

Qualification data for firms and persons specified in the "Quality Assurance" Article to demonstrate their capabilities and experience. Include lists of completed projects with project names and addresses, names and addresses of architects and owners, and other information specified.

QUALITY ASSURANCE

Installer Qualifications: Engage an experience Installer who has completed sheet metal flashing and trim work similar in material, design, and extent to that indicated for this Project and with a record of successful in-service performance. Submit a letter from the Roof Manufacturer or Representative, indicating Fabricator/Installer are acceptable.

PROJECT CONDITIONS

Coordinate Work of this Section with interfacing and adjoining Work for proper sequencing of each installation. Ensure best possible weather resistance, durability of Work, and protection of materials and finishes.

PART 2 - PRODUCTS

METALS

Aluminum: Alloy and temper recommended by aluminum producer and finisher for type of use and finish indicated and with not less than the strength and durability of alloy and temper designated below.

Mill-Finish Aluminum Sheet: ASTM B 209 (ASTM B 209M), 3003-H14, with a minimum thickness of 0.040 inch (1.0 mm), unless otherwise indicated.

Galvanized Steel Sheet: ASTM 526, G 90 (ASTM A 526M, Z 275), commercial quality, or ASTM A 527, G 90 (ASTM A 527M, Z 275), lock-forming quality, hot-dip galvanized steel sheet with 0.20 percent copper, mill phosphatized where indicated for painting; not less than 0.0635 inch (1.6 mm) thick, unless otherwise indicated.

MISCELLANEOUS MATERIALS AND ACCESSORIES

Fasteners: Same metal screws as sheet metal flashing or other noncorrosive metal as recommended by sheet metal manufacturer. Match finish of exposed heads with material being fastened.

Asphalt Mastic: SSPC-Paint 12, solvent-type asphalt mastic, nominally free of sulfur and containing no asbestos fibers, compounded for 15-mil (0.4-mm) dry film thickness per coat.

Mastic Sealant: Polyisobutylene; nonhardening, nonskinning, nondrying, nonmigrating sealant.

Elastomeric Sealant: Generic type recommended by sheet metal manufacturer and fabricator of components being sealed equal to the following:

Spectrem 1 as manufactured by Tremco, Inc.

Epoxy Seam Sealer: 2-part, noncorrosive, aluminum seam-cementing compound, recommended by aluminum manufacturer for exterior and interior nonmoving joints, including riveted joints.

Adhesives: Type recommended by flashing sheet metal manufacturer for waterproof and weather-resistant seaming and adhesive application of flashing sheet metal.

Metal Accessories: Provide sheet metal clips, straps, anchoring devices, and similar accessory units as required for installation of Work, matching or compatible with material being installed; noncorrosive; size and thickness required for performance.

Paper Slip Sheet: 5-lb/square (0.244 kg/sq. m) red rosin, sized building paper conforming to FS UU-B-790, Type I, Style lb.

Polyethylene Underlayment: ASTM D 4397, minimum 6-mil- (0.15-mm-) thick black polyethylene film, resistant to decay when tested according to ASTM E 154.

Roofing Cement: ASTM D 4586, Type I, asbestos free, asphalt based; prior to use, confirm product acceptability with Roofing Manufacturer.

FABRICATION, GENERAL

Sheet Metal Fabrication Standard: Fabricate sheet metal flashing and trim to comply with recommendations of SMACNA's "Architectural Sheet Metal Manual" that apply to the design, dimensions, metal, and other characteristics of the item indicated. Refer to Section 07550 – 2.04.F.

Comply with details shown to fabricate sheet metal flashing and trim that fit substrates and result in waterproof and weather-resistant performance once installed. Verify shapes and dimensions of surfaces to be covered before fabricating sheet metal.

Form exposed sheet metal Work that is without excessive oil canning, buckling, and tool marks and that is true to line and levels indicated, with exposed edges folded back to form hems.

Seams: Fabricate nonmoving seams in sheet metal with flat-lock seams. Galvanized Steel: Tin edges to be seamed, form seams, and solder; Aluminum: Form seams and seal with epoxy seam sealer and rivet joints for additional strength.

Expansion Provisions: Space movement joints at maximum of 10 feet (3 m) with no joints allowed within 24 inches (610 mm) of corner or intersection. Where lapped or bayonet-type expansion provisions in Work cannot be used or would not be sufficiently weatherproof and waterproof, form expansion joints of intermeshing hooked flanges, not less than 1 inch (25 mm) deep, filled with mastic sealant (concealed within joints).

Sealed Joints: Form nonexpansion, but movable, joints in metal to accommodate elastomeric sealant to comply with SMACNA standards.

Separate metal from noncompatible metal or corrosive substrates by coating concealed surfaces at locations of contact with asphalt mastic or other permanent separation as recommended by manufacturer.

Conceal fasteners and expansion provisions where possible. Exposed fasteners are not allowed on faces of sheet metal exposed to public view.

Fabricate cleats and attachment devices from same material as sheet metal component being anchored or from compatible, noncorrosive metal recommended by sheet metal manufacturer.

Size: As recommended by SMACNA manual or sheet metal manufacturer for application but never less than thickness of metal being secured.

SHEET METAL FABRICATIONS

General: Fabricate sheet metal items in thickness or weight needed to comply with performance requirements but not less than that listed below for each application and metal.

Scuppers: Fabricate from the following materials:

Aluminum: 0.050 inch (1.2 mm) thick.

Exposed Trim, Gravel Stops, and Fasciae: Refer to Section 07600.

Copings: Refer to Section 07600.

Counterflashing: Fabricate from the following material:

Aluminum: 0.0320 inch (0.8 mm) thick.

Flashing Receivers: Fabricate from the following material:

Aluminum: 0.0320 inch (0.8 mm) thick.

Drip Edges: Fabricate from the following material:

Aluminum: 0.040 inch (1.0 mm) thick.

Equipment Support Flashing: Fabricate from the following material:

Aluminum: 0.0320 inch (0.8 mm) thick.

Roof-Penetration Flashing: Refer to Section 07550.

Exhaust Hood:

Galvanized Steel: 0.0635 inch (1.6 mm) thick; also, galvanized bird screen.

ALUMINUM FINISHES

General: Comply with Aluminum Association's (AA) "Designation System for Aluminum Finishes" for finish designations and application recommendations. Refer to METALS paragraph in this section.

PART 3 - EXECUTION

EXAMINATION

Examine substrates and conditions under which sheet metal flashing and trim are to be installed and verify that Work may properly commence. Do not proceed with installation until unsatisfactory

conditions have been corrected.

INSTALLATION

General: Unless otherwise indicated, install sheet metal flashing and trim to comply with performance requirements, manufacturer's installation instructions, and SMACNA's "Architectural Sheet Metal Manual." Anchor units of Work securely in place by methods indicated, providing for thermal expansion of metal units; conceal fasteners where possible, and set units true to line and level as indicated. Install Work with laps, joints, and seams that will be permanently watertight and weatherproof.

Install exposed sheet metal Work that is without excessive oil canning, buckling, and tool marks and that is true to line and levels indicated, with exposed edges folded back to form hems. Install sheet metal flashing
and trim to fit substrates and to result in waterproof and weather-resistant performance. Verify shapes and dimensions of surfaces to be covered before fabricating sheet metal.

Roof-Edge Flashings: Secure metal flashings at roof edges according to FM Loss Prevention Data Sheet 1-49 for specified wind zone; refer to Section 07600.

Expansion Provisions: Provide for thermal expansion of exposed sheet metal Work. Space movement joints at maximum of 10 feet (3 m) with no joints allowed within 24 inches (610 mm) of corner or intersection. Where lapped or bayonet-type expansion provisions in Work cannot be used or would not be sufficiently weatherproof and waterproof, form expansion joints of intermeshing hooked flanges, not less than 1 inch (25 mm) deep, filled with mastic sealant (concealed within joints).

Soldered Joints: Clean surfaces to be soldered, removing oils and foreign matter. Pretin edges of sheets to be soldered to a width of 1-1/2 inches (38 mm), except where pretinned surface would show in finished Work.

Do not solder the following metals:

Aluminum.

Pretinning is not required for the following metals:

Lead.

Do not use torches for soldering. Heat surfaces to receive solder and flow solder into joint. Fill joint completely. Completely remove flux and spatter from exposed surfaces.

Sealed Joints: Form nonexpansion, but movable, joints in metal to accommodate elastomeric sealant to comply with SMACNA standards. Fill joint with sealant and form metal to completely conceal sealant.

Use joint adhesive for nonmoving joints specified not to be soldered.

Seams: Fabricate nonmoving seams in sheet metal with flat-lock seams. Galvanized Steel: Tin edges to be seamed, form seams, and solder; Aluminum: Form seams and seal with epoxy seam sealer and rivet joints for additional strength.

Separations: Separate metal from noncompatible metal or corrosive substrates by coating

concealed surfaces, at locations of contact, with asphalt mastic or other permanent separation as recommended by manufacturer.

Underlayment: Where installing stainless steel or aluminum directly on cementitious or wood substrates, install a slip sheet of red-rosin paper and a course of polyethylene underlayment.

Bed flanges of Work in a thick coat of roofing cement where required for waterproof performance.

Flashing Receivers: Install where noted to receive counter flashing as follows:

Saw cut 1-1/2" deep reglet in horizontal mortar joint of masonry wall.

Insert horizontal let of flashing receiver into reglet lap joints a minimum of 2" and bed with sealant and insert lead wedges at 12" o.c. as required to hold receiver in place. Provide sealant for watertight seal.

Exhaust Hood: Provide exhaust hood where noted and in accordance with approved shop drawings and SMACNA "HVAC Duct Construction Standards".

Counterflashings: Coordinate installation of counterflashings with installation of assemblies to be protected by counterflashing. Install counterflashings in reglets or receivers. Secure in a waterproof manner by means of snap-in installation and sealant, lead wedges and sealant, interlocking folded seam, or blind rivets and sealant. Lap counterflashing joints a minimum of 2 inches (50 mm) and bed with sealant.

Equipment Support Flashing: Coordinate equipment support flashing installation with roofing and equipment installation. Seal flashing to equipment support member.

Roof-Penetration Flashing: Coordinate roof-penetration flashing installation with roofing and installation of items penetrating roof (refer to Section (07550). Install flashing as follows:

Turn lead flashing down inside vent piping, being careful not to block vent piping with flashing.

Seal and clamp flashing to pipes penetrating roof, other than lead flashing on vent piping.

CLEANING AND PROTECTION

Clean exposed metal surfaces, removing substances that might cause corrosion of metal or deterioration of finishes.

Provide final protection and maintain conditions that ensure sheet metal flashing and trim Work during construction is without damage or deterioration other than natural weathering at the time of Substantial Completion.

END OF SECTION 07620

SECTION 07920 - JOINT SEALANTS

PART 1 - GENERAL

RELATED DOCUMENTS

Drawings and general provisions of the Contract, including General and Supplementary Conditions and Division 1 Specification Sections, apply to this Section.

SUMMARY

This Section includes sealants for the following applications, including those specified by reference to this Section:

Exterior joints in the following vertical surfaces and nontraffic horizontal surfaces:

Joints between different materials listed above.

Perimeter joints between materials listed above and frames of doors and windows.

Other joints as indicated.

Exterior joints in the following horizontal traffic surfaces:

Joints between different materials listed above.

Other joints as indicated.

Interior joints in the following vertical surfaces and horizontal nontraffic surfaces:

Control and expansion joints on exposed interior surfaces of exterior walls.

Perimeter joints of exterior openings where indicated.

Tile control and expansion joints.

Perimeter joints between interior wall surfaces and frames of interior doors, windows, and elevator entrances.

Joints between plumbing fixtures and adjoining walls, floors, and counters.

Other joints as indicated.

Related Sections include the following:

Division 8 Section "Glazing" for glazing sealants.

Division 9 Section "Gypsum Board Assemblies" for sealing perimeter joints of gypsum board partitions to reduce sound transmission.

Division 9 Section "Acoustical Panel Ceilings" for sealing edge moldings at perimeters of acoustical ceilings.

PERFORMANCE REQUIREMENTS

Provide joint sealants for interior applications that establish and maintain airtight and water-resistant continuous joint seals without staining or deteriorating joint substrates.

SUBMITTALS

Product Data: For each joint-sealant product indicated.

Samples for Initial Selection: Manufacturer's color charts consisting of strips of cured sealants showing the full range of colors available for each product exposed to view.

Samples for Verification: For each type and color of joint sealant required. Install joint sealants in 1/2-inch- (13-mm-) wide joints formed between two 6-inch- (150-mm-) long strips of material matching the appearance of exposed surfaces adjacent to joint sealants.

Product Certificates: Signed by manufacturers of joint sealants certifying that products furnished comply with requirements and are suitable for the use indicated.

SWRI Validation Certificate: For each elastomeric sealant specified to be validated by SWRI's Sealant Validation Program.

Qualification Data: For firms and persons specified in "Quality Assurance" Article to demonstrate their capabilities and experience. Include lists of completed projects with project names and addresses, names and addresses of architects and owners, and other information specified.

Preconstruction Field Test Reports: Indicate which sealants and joint preparation methods resulted in optimum adhesion to joint substrates based on preconstruction testing specified in "Quality Assurance" Article.

Field Test Report Log: For each elastomeric sealant application. Include information specified in "Field Quality Control" Article.

Compatibility and Adhesion Test Reports: From sealant manufacturer indicating the following:

Materials forming joint substrates and joint-sealant backings have been tested for compatibility and adhesion with joint sealants.

Interpretation of test results and written recommendations for primers and substrate preparation needed for adhesion.

Product Test Reports: From a qualified testing agency indicating sealants comply with requirements, based on comprehensive testing of current product formulations.

Warranties: Special warranties specified in this Section.

QUALITY ASSURANCE

Installer Qualifications: An experienced installer who has specialized in installing joint sealants similar in material, design, and extent to those indicated for this Project and whose work has resulted in joint-sealant installations with a record of successful in-service performance.

Source Limitations: Obtain each type of joint sealant through one source from a single manufacturer.

Testing will not be required if joint sealant manufacturers submit joint preparation data that are based on previous testing of current sealant products for adhesion to, and compatibility with, joint substrates and other materials matching those submitted.

Test elastomeric joint sealants according to SWRI's Sealant Validation Program for compliance with requirements specified by reference to ASTM C 920 for adhesion and cohesion under cyclic movement, adhesion-in peel, and indentation hardness.

Test other joint sealants for compliance with requirements indicated by referencing standard specifications and test methods.

DELIVERY, STORAGE, AND HANDLING

Deliver materials to Project site in original unopened containers or bundles with labels indicating manufacturer, product name and designation, color, expiration date, pot life, curing time, and mixing instructions for multicomponent materials.

Store and handle materials in compliance with manufacturer's written instructions to prevent their deterioration or damage due to moisture, high or low temperatures, contaminants, or other causes.

PROJECT CONDITIONS

Environmental Limitations: Do not proceed with installation of joint sealants under the following conditions:

When ambient and substrate temperature conditions are outside limits permitted by joint sealant manufacturer.

When ambient and substrate temperature conditions are outside limits permitted by joint sealant manufacturer or are below 40 deg F (4.4 deg C).

When joint substrates are wet.

Joint-Width Conditions: Do not proceed with installation of joint sealants where joint widths are less than those allowed by joint sealant manufacturer for applications indicated.

Joint-Substrate Conditions: Do not proceed with installation of joint sealants until contaminants capable of interfering with adhesion are removed from joint substrates.

WARRANTY

General Warranty: Special warranties specified in this Article shall not deprive Owner of other rights Owner may have under other provisions of the Contract Documents and shall be in addition to, and run concurrent with, other warranties made by Contractor under requirements of the Contract Documents.

Special Installer's Warranty: Written warranty, signed by Installer agreeing to repair or replace elastomeric joint sealants that do not comply with performance and other requirements specified in this Section within specified warranty period.

Warranty Period: Two years from date of Substantial Completion.

Special warranties specified in this Article exclude deterioration or failure of elastomeric joint sealants from the following:

Movement of the structure resulting in stresses on the sealant exceeding sealant manufacturer's written specifications for sealant elongation and compression caused by structural settlement or errors attributable to design or construction.

Disintegration of joint substrates from natural causes exceeding design specifications.

Mechanical damage caused by individuals, tools, or other outside agents.

Changes in sealant appearance caused by accumulation of dirt or other atmospheric contaminants.

PART 2 - PRODUCTS

PRODUCTS AND MANUFACTURERS

Available Products: Subject to compliance with requirements, products that may be incorporated into the Work include, but are not limited to, the products specified in the sealant schedules at the end of Part 3.

MATERIALS, GENERAL

Compatibility: Provide joint sealants, backings, and other related materials that are compatible with one another and with joint substrates under conditions of service and application, as demonstrated by sealant manufacturer based on testing and field experience.

Colors of Exposed Joint Sealants: As selected by Architect from manufacturer's full range for this characteristic.

ELASTOMERIC JOINT SEALANTS

Elastomeric Sealant Standard: Comply with ASTM C 920 and other requirements indicated for each liquid-applied chemically curing sealant in the Elastomeric Joint-Sealant Schedule at the end of Part 3, including those referencing ASTM C 920 classifications for type, grade, class, and uses.

Additional Movement Capability: Where additional movement capability is specified in the Elastomeric Joint-Sealant Schedule, provide products with the capability, when tested for adhesion and cohesion under maximum cyclic movement per ASTM C 719, to withstand the specified percentage change in the joint width existing at the time of installation and remain in compliance with other requirements of ASTM C 920 for uses indicated.

Stain-Test-Response Characteristics: Where elastomeric sealants are specified in the Elastomeric Joint-Sealant Schedule to be nonstaining to porous substrates, provide products that have undergone testing according to ASTM C 1248 and have not stained porous joint substrates indicated for Project.

SOLVENT-RELEASE JOINT SEALANTS

Acrylic-Based Solvent-Release Joint-Sealant Standard: Comply with ASTM C 1311 for each product of this description indicated in the Solvent-Release Joint-Sealant Schedule at the end of Part 3.

Butyl-Rubber-Based Solvent-Release Joint-Sealant Standard: Comply with ASTM C 1085 for each product of this description indicated in the Solvent-Release Joint-Sealant Schedule at the end of Part 3.

Pigmented Narrow Joint Sealant: For each product of this description indicated in the Solvent-Release Joint-Sealant Schedule at the end of Part 3 provide manufacturer's standard, solvent-release-curing, pigmented, synthetic-rubber sealant complying with AAMA 803.3 and formulated for sealing joints 3/16 inch (5 mm) or smaller in width.

LATEX JOINT SEALANTS

Latex Sealant Standard: Comply with ASTM C 834 for each product of this description indicated in the Latex Joint-Sealant Schedule at the end of Part 3.

ACOUSTICAL JOINT SEALANTS

Acoustical Sealant for Exposed and Concealed Joints: For each product of this description indicated in the Acoustical Joint-Sealant Schedule at the end of Part 3, provide manufacturer's standard nonsag, paintable, nonstaining latex sealant complying with ASTM C 834 and the following:

Product effectively reduces airborne sound transmission through perimeter joints and openings in building construction as demonstrated by testing representative assemblies according to ASTM E 90.

PREFORMED JOINT SEALANTS

Preformed Silicone-Sealant System: For each product of this description indicated in the Preformed Joint-Sealant Schedule at the end of Part 3, provide manufacturer's standard system consisting of precured low-modulus silicone extrusion, in sizes to fit joint widths indicated, combined with a neutral-curing silicone sealant for bonding extrusions to substrates.

Preformed Foam Sealants: For each product of this description indicated in the Preformed Joint-

Sealant Schedule at the end of Part 3, provide manufacturer's standard preformed, precompressed, impregnated, open-cell foam sealant manufactured from high-density urethane foam impregnated with a nondrying, water-repellent agent; factory produced in precompressed sizes and in roll or stick form to fit joint widths indicated and to develop a watertight and airtight seal when compressed to the degree specified by manufacturer; and complying with the following:

Properties: Permanently elastic, mildew resistant, nonmigratory, nonstaining, and compatible with joint substrates and other joint sealants.

Impregnating Agent: Neoprene rubber suspended in water-based emulsion.

Density: Manufacturer's standard.

Backing: Pressure-sensitive adhesive, factory applied to one side with protective wrapping.

JOINT-SEALANT BACKING

General: Provide sealant backings of material and type that are nonstaining; are compatible with joint substrates, sealants, primers, and other joint fillers; and are approved for applications indicated by sealant manufacturer based on field experience and laboratory testing.

Cylindrical Sealant Backings: ASTM C 1330, of type indicated below and of size and density to control sealant depth and otherwise contribute to producing optimum sealant performance:

Type C: Closed-cell material with a surface skin.

Elastomeric Tubing Sealant Backings: Neoprene, butyl, EPDM, or silicone tubing complying with ASTM D 1056, nonabsorbent to water and gas, and capable of remaining resilient at temperatures down to minus 26 deg F (minus 32 deg C). Provide products with low compression set and of size and shape to provide a secondary seal, to control sealant depth, and otherwise contribute to optimum sealant performance.

Bond-Breaker Tape: Polyethylene tape or other plastic tape recommended by sealant manufacturer for preventing sealant from adhering to rigid, inflexible joint-filler materials or joint surfaces at back of joint where such adhesion would result in sealant failure. Provide self-adhesive tape where applicable.

MISCELLANEOUS MATERIALS

Primer: Material recommended by joint sealant manufacturer where required for adhesion of sealant to joint substrates indicated, as determined from preconstruction joint-sealant-substrate tests and field tests.

Cleaners for Nonporous Surfaces: Chemical cleaners acceptable to manufacturers of sealants and sealant backing materials, free of oily residues or other substances capable of staining or harming joint substrates and adjacent nonporous surfaces in any way, and formulated to promote optimum adhesion of sealants with joint substrates.

Masking Tape: Nonstaining, nonabsorbent material compatible with joint sealants and surfaces adjacent to joints.

PART 3 - EXECUTION

EXAMINATION

Examine joints indicated to receive joint sealants, with Installer present, for compliance with requirements for joint configuration, installation tolerances, and other conditions affecting joint-sealant performance.

Proceed with installation only after unsatisfactory conditions have been corrected.

PREPARATION

Surface Cleaning of Joints: Clean out joints immediately before installing joint sealants to comply with joint sealant manufacturer's written instructions and the following requirements:

Remove all foreign material from joint substrates that could interfere with adhesion of joint sealant, including dust, paints (except for permanent, protective coatings tested and approved for sealant adhesion and compatibility by sealant manufacturer), old joint sealants, oil, grease, waterproofing, water repellents, water, surface dirt, and frost.

Clean porous joint substrate surfaces by brushing, grinding, blast cleaning, mechanical abrading, or a combination of these methods to produce a clean, sound substrate capable of developing optimum bond with joint sealants. Remove loose particles remaining from above cleaning operations by vacuuming or blowing out joints with oil-free compressed air. Porous joint surfaces include the following:

Remove laitance and form-release agents from concrete.

Clean nonporous surfaces with chemical cleaners or other means that do not stain, harm substrates, or leave residues capable of interfering with adhesion of joint sealants.

Metal.
Glass.
Porcelain enamel.
Glazed surfaces of ceramic tile.

Joint Priming: Prime joint substrates where recommended in writing by joint sealant manufacturer, based on preconstruction joint-sealant-substrate tests or prior experience. Apply primer to comply with joint sealant manufacturer's written instructions. Confine primers to areas of joint-sealant bond; do not allow spillage or migration onto adjoining surfaces.

Masking Tape: Use masking tape where required to prevent contact of sealant with adjoining surfaces that otherwise would be permanently stained or damaged by such contact or by cleaning methods required to remove sealant smears. Remove tape immediately after tooling without disturbing joint seal.

INSTALLATION OF JOINT SEALANTS

General: Comply with joint sealant manufacturer's written installation instructions for products and

applications indicated, unless more stringent requirements apply.

Sealant Installation Standard: Comply with recommendations of ASTM C 1193 for use of joint sealants as applicable to materials, applications, and conditions indicated.

Acoustical Sealant Application Standard: Comply with recommendations of ASTM C 919 for use of joint sealants in acoustical applications as applicable to materials, applications, and conditions indicated.

Install sealant backings of type indicated to support sealants during application and at position required to produce cross-sectional shapes and depths of installed sealants relative to joint widths that allow optimum sealant movement capability.

Do not leave gaps between ends of sealant backings.

Do not stretch, twist, puncture, or tear sealant backings.

Remove absorbent sealant backings that have become wet before sealant application and replace them with dry materials.

Install bond-breaker tape behind sealants where sealant backings are not used between sealants and back of joints.

Install sealants by proven techniques to comply with the following and at the same time backings are installed:

Place sealants so they directly contact and fully wet joint substrates.

Completely fill recesses provided for each joint configuration.

Produce uniform, cross-sectional shapes and depths relative to joint widths that allow optimum sealant movement capability.

Tooling of Nonsag Sealants: Immediately after sealant application and before skinning or curing begins, tool sealants according to requirements specified below to form smooth, uniform beads of configuration indicated; to eliminate air pockets; and to ensure contact and adhesion of sealant with sides of joint.

Remove excess sealants from surfaces adjacent to joint.

Use tooling agents that are approved in writing by sealant manufacturer and that do not discolor sealants or adjacent surfaces.

Provide concave joint configuration per Figure 5A in ASTM C 1193, unless otherwise indicated.

Use masking tape to protect adjacent surfaces of recessed tooled joints.

Installation of Preformed Silicone-Sealant System: Comply with the following requirements:

Apply masking tape to each side of joint, outside of area to be covered by sealant system.

Apply a bead of silicone sealant to each side of joint to produce a bead of size complying with preformed silicone-sealant system manufacturer's printed schedule and covering a bonded area of not less than a 3/8 inch (10 mm). Hold edge of sealant bead inside of masking tape by 1/4 inch (6 mm).

Within 10 minutes of sealant application, press silicone extrusion into sealant to wet extrusion and substrate. Use a roller to apply consistent pressure and ensure uniform contact between sealant and both extrusion and substrate.

Complete installation of horizontal joints before installing vertical joints. Lap vertical joints over horizontal joints. At end of joints, cut silicone extrusion with a razor knife.

Installation of Preformed Foam Sealants: Install each length of sealant immediately after removing protective wrapping, taking care not to pull or stretch material, to produce seal continuity at ends, turns, and intersections of joints. For applications at low ambient temperatures where expansion of sealant requires acceleration to produce seal, apply heat to sealant to comply with sealant manufacturer's written instructions.

FIELD QUALITY CONTROL

Field-Adhesion Testing: Field-test joint-sealant adhesion to joint substrates as follows:

Perform one test for each 1000 feet (300 m) of joint length thereafter or one test per each floor per elevation.

CLEANING

Clean off excess sealants or sealant smears adjacent to joints as the Work progresses by methods and with cleaning materials approved in writing by manufacturers of joint sealants and of products in which joints occur.

PROTECTION

Protect joint sealants during and after curing period from contact with contaminating substances and from damage resulting from construction operations or other causes so sealants are without deterioration or damage at time of Substantial Completion. If, despite such protection, damage or deterioration occurs, cut out and remove damaged or deteriorated joint sealants immediately so installations with repaired areas are indistinguishable from the original work.

ELASTOMERIC JOINT-SEALANT SCHEDULE

A. Bituminous based (Type B): Single component, asphalt compound, elongation capability of 2% of joint width.

    1. Use for roof sealant and dissimilar material separation at roof.
    2. Approved Manufacturers:

a) Barrier International "BR-30".
b) Kamak "AR Elastomeric.

B. Acrylic Emulsion Latex (Type C): ASTM C834, single component; color as selected.

1. Formulated to be non-sag printable.
2. Approved Manufacturers:
   a) Bostik "Chem-Calk 600."
   b) Pencora "AC-20."
   c) Sonneborn "Sonolac."
   d) Tremco "Tremco Acrylic Latex 834."

C. Polyurethane Sealant (Type G): ASTM C920, Grade NS, Class 25, Use for exterior sealant joints except where specified herein for silicone type; single component, chemical curing, non-staining, non-bleeding, capable of continuous water immersion, none-sagging type; color as selected.

1. Approved Manufacturers
   a) Bostik "Chem-Calk 900."
   b) Mameco "Vulkem 921."
   c) Pecora Dynatrol 1."
   d) Sika "Sikaflex IA."

D. Silicone Sealant (Type K): ASTM C920, Grade NS, Class 25, Use for exterior sealant joints where both faces are metal, glass or other non-porous material; single component, fungus resistant, acidic curing, non-sagging, non-staining, non-bleeding; color as selected.

1. Approved Manufacturers:
   a) Bostik "Chem-Calk 1200."
   b) Dow "Dow Corning 999A."
   c) General Electric "Construction 1200."
   d) Pecora Corp. "863."
   e) Tremco, Inc. "Proglaze."

E. Coating System for Exterior Wall: Single Component Elastomeric Polyurethane seamless coating, color as selected.

1. Approved Manufacturers:

   a) Mameco "Vulkem 450."

   Pro-Series SC-170 Rubber Base Sound Sealant; Ohio Sealants, Inc.
   BA-98; Pecora Corporation.
   Tremco Acoustical Sealant; Tremco.

END OF SECTION 07920

SECTION 08110 - STEEL DOORS AND FRAMES

PART 1 - GENERAL

RELATED DOCUMENTS

Drawings and general provisions of the Contract, including General and Supplementary Conditions and Division 1 Specification Sections, apply to this Section.

SUMMARY

This Section includes steel doors and frames.

Related Sections: The following Sections contain requirements that relate to this Section:

Division 4 Section "Unit Masonry" for building anchors into and grouting frames in masonry construction.

Division 8 Section "Flush Wood Doors" for hollow-core and solid-core wood doors installed in steel frames.

Division 8 Section "Door Hardware" for door hardware and weatherstripping.

Division 9 Section "Painting" for field painting primed doors and frames.

SUBMITTALS

General: Submit each item in this Article according to the Conditions of the Contract and Division 1 Specification Sections.

Product Data for each type of door and frame specified, including details of construction, materials, dimensions, hardware preparation, core, label compliance, sound ratings, profiles, and finishes.

Shop Drawings showing fabrication and installation of steel doors and frames. Include details of each frame type, elevations of door design types, conditions at openings, details of construction, location and installation requirements of door and frame hardware and reinforcements, and details of joints and connections. Show anchorage and accessory items.

Door Schedule: Submit schedule of doors and frames using same reference numbers for details and openings as those on Contract Drawings.

Indicate coordination of glazing frames and stops with glass and glazing requirements.

Samples for initial selection in the form of manufacturer's color charts showing the full range of colors available for factory-finished doors and frames.

Samples for verification of each type of exposed finish required, prepared on Samples not less than 3 by 5 inches (75 by 125 mm) and of same thickness and material indicated for final unit of Work. Where finishes involve normal color and texture variations, include Sample sets showing the full range of variations expected.

Oversize Construction Certification: For door assemblies required to be fire rated and exceeding limitations of labeled assemblies, submit certification of a testing agency acceptable to authorities having jurisdiction that each door and frame assembly has been constructed to conform to design, materials, and construction equivalent to requirements for labeled construction.

QUALITY ASSURANCE

Provide doors and frames complying with ANSI/SDI 100 "Recommended Specifications for Standard Steel Doors and Frames" and as specified.

Fire-Rated Door Assemblies: Units that comply with NFPA 80, are identical to door and frame assemblies tested for fire-test-response characteristics per ASTM E 152, and are labeled and listed by UL, Warnock Hersey, or another testing and inspecting agency acceptable to authorities having jurisdiction.

Oversize Fire-Rated Door Assemblies: For units exceeding sizes of tested assemblies, provide certification by a testing agency acceptable to authorities having jurisdiction that doors conform to all standard construction requirements of tested and labeled fire-rated door assemblies except for size.

Temperature-Rise Rating: Where indicated, provide doors that have a temperature-rise rating of 450 deg F (250 deg C) maximum in 30 minutes of fire exposure.

DELIVERY, STORAGE, AND HANDLING

Deliver doors and frames cardboard-wrapped or crated to provide protection during transit and job storage. Provide additional protection to prevent damage to finish of factory-finished doors and frames.

Inspect doors and frames on delivery for damage. Minor damages may be repaired provided refinished items match new work and are acceptable to Architect; otherwise, remove and replace damaged items as directed.

Store doors and frames at building site under cover. Place units on minimum 4-inch- (100-mm-) high wood blocking. Avoid using nonvented plastic or canvas shelters that could create a humidity chamber. If cardboard wrappers on doors become wet, remove cartons immediately. Provide minimum 1/4-inch (6-mm) spaces between stacked doors to promote air circulation.

PART 2 - PRODUCTS

MANUFACTURERS

Available Manufacturers: Subject to compliance with requirements, manufacturers offering products that may be incorporated in the Work include, but are not limited to, the following:

Steel Doors and Frames:

Amweld Building Products, Inc.
Ceco Door Products.
Steelcraft.

Metal Products, Inc.

MATERIALS

Hot-Rolled Steel Sheets and Strip: Commercial-quality carbon steel, pickled and oiled, complying with ASTM A 569 (ASTM A 569M).

Cold-Rolled Steel Sheets: Carbon steel complying with ASTM A 366 (ASTM A 366M), commercial quality, or ASTM A 620 (ASTM A 620M), drawing quality, special killed.

Galvanized Steel Sheets: Zinc-coated carbon steel complying with ASTM A 526 (ASTM A 526M), commercial quality, or ASTM A 642 (ASTM A 642M), drawing quality, hot-dip galvanized according to ASTM A 525, with A 60 or G 60 (ASTM A 525M, with Z 180 or ZF 180) coating designation, mill phosphatized.

Supports and Anchors: Fabricated from not less than 0.0478-inch- (1.2-mm-) thick steel sheet; 0.0516-inch- (1.3-mm-) thick galvanized steel where used with galvanized steel frames.

Inserts, Bolts, and Fasteners: Manufacturer's standard units. Where items are to be built into exterior walls, hot-dip galvanize complying with ASTM A 153, Class C or D as applicable.

DOORS

Steel Doors: Provide 1-3/4-inch- (44-mm-) thick doors of materials and ANSI/SDI 100 grades and models specified below, or as indicated on Drawings or schedules:

Exterior Doors: Grade II, heavy-duty, Model 2, seamless design, minimum 0.0516-inch- (1.3-mm-) thick galvanized steel sheet faces.

FRAMES

Provide metal frames for doors, transoms, sidelights, borrowed lights, and other openings, according to ANSI/SDI 100, and of types and styles as shown on Drawings and schedules. Conceal fastenings, unless otherwise indicated. Fabricate frames of minimum 0.0478-inch- (1.2-mm-) thick cold-rolled steel sheet.

Fabricate frames with mitered or coped corners, continuously welded construction.

Fabricate frames for interior openings over 48 inches (1220 mm) wide from 0.0598-inch- (1.5-mm-) thick steel sheet.

Fabricate exterior frames for openings over 48 inches (1220 mm) wide from 0.0635-inch- (1.6-mm-) thick galvanized steel sheet.

Form exterior frames from 16 gauge thick galvanized steel sheet.

Door Silencers: Except on weatherstripped frames, drill stops to receive 3 silencers on strike jambs of single-door frames and 2 silencers on heads of double-door frames.

Plaster Guards: Provide minimum 0.0179-inch- (0.45-mm-) thick steel plaster guards or mortar boxes at back of hardware cutouts where mortar or other materials might obstruct hardware

operation and to close off interior of openings.

Grout: When required in masonry construction, as specified in Division 4 Section "Unit Masonry."

FABRICATION

Fabricate steel door and frame units to be rigid, neat in appearance, and free from defects, warp, or buckle. Where practical, fit and assemble units in manufacturer's plant. Clearly identify work that cannot be permanently factory assembled before shipment, to assure proper assembly at Project site. Comply with ANSI/SDI 100 requirements.

Internal Construction: One of the following manufacturer's standard core materials according to SDI standards:

Resin-impregnated paper honeycomb.

Clearances: Not more than 1/8 inch (3.2 mm) at jambs and heads, except not more than 1/4 inch (6.4 mm) between non-fire-rated pairs of doors. Not more than 3/4 inch (19 mm) at bottom.

Fire Doors: Provide clearances according to NFPA 80.

Fabricate exposed faces of doors and panels, including stiles and rails of nonflush units, from only cold-rolled steel sheet.

Tolerances: Comply with SDI 117 "Manufacturing Tolerances Standard Steel Doors and Frames."

Fabricate concealed stiffeners, reinforcement, edge channels, louvers, and moldings from either cold- or hot-rolled steel sheet.

Galvanized Steel Doors, Panels, and Frames: Fabricate doors, panels, and frames from galvanized steel sheet according to SDI 112. Close top and bottom edges of doors flush as an integral part of door construction or by addition of minimum 0.0635-inch- (1.6-mm-) thick galvanized steel channels, with channel webs placed even with top and bottom edges. Seal joints in top edges of doors against water penetration.

Exposed Fasteners: Unless otherwise indicated, provide countersunk flat or oval heads for exposed screws and bolts.

Thermal-Rated (Insulating) Assemblies: At exterior locations and elsewhere as shown or scheduled, provide doors fabricated as thermal-insulating door and frame assemblies and tested according to ASTM C 236 or ASTM C 976 on fully operable door assemblies.

Unless otherwise indicated, provide thermal-rated assemblies with U-value rating of 0.41 Btu/sq. ft. x h x deg F (2.33 W/sq. m x K) or better.

Sound-Rated (Acoustical) Assemblies: Where shown or scheduled, provide door and frame assemblies fabricated as sound-reducing type, tested according to ASTM E 1408, and classified according to ASTM E 413.

Unless otherwise indicated, provide acoustical assemblies with STC sound ratings of 33 or better.

Hardware Preparation: Prepare doors and frames to receive mortised and concealed hardware according to final door hardware schedule and templates provided by hardware supplier. Comply with applicable requirements of SDI 107 and ANSI A115 Series specifications for door and frame preparation for hardware.

For concealed overhead door closers, provide space, cutouts, reinforcing, and provisions for fastening in top rail of doors or head of frames, as applicable.

Reinforce doors and frames to receive surface-applied hardware. Drilling and tapping for surface-applied hardware may be done at Project site.

Locate hardware as indicated on Shop Drawings or, if not indicated, according to the Door and Hardware Institute's (DHI) "Recommended Locations for Architectural Hardware for Standard Steel Doors and Frames."

Glazing Stops: Minimum 0.0359-inch- (0.9-mm-) thick steel or 0.040-inch- (1-mm-) thick aluminum.

Provide nonremovable stops on outside of exterior doors and on secure side of interior doors for glass, louvers, and other panels in doors.

Provide screw-applied, removable, glazing beads on inside of glass, louvers, and other panels in doors.

FINISHES, GENERAL

Comply with NAAMM's "Metal Finishes Manual" for recommendations relative to applying and designating finishes.

Comply with SSPC-PA 1, "Paint Application Specification No. 1," for steel sheet finishes.

Apply primers and organic finishes to doors and frames after fabrication.

GALVANIZED STEEL SHEET FINISHES

Surface Preparation: Clean surfaces with nonpetroleum solvent so that surfaces are free of oil or other contaminants. After cleaning, apply a conversion coating of the type suited to the organic coating applied over it. Clean welds, mechanical connections, and abraded areas, and apply galvanizing repair paint specified below to comply with ASTM A 780.

Galvanizing Repair Paint: High-zinc-dust-content paint for regalvanizing welds in galvanized steel, with dry film containing not less than 94 percent zinc dust by weight, and complying with DOD-P-21035 or SSPC-Paint 20.

Factory Priming for Field-Painted Finish: Where field painting after installation is indicated, apply air-dried primer specified below immediately after cleaning and pretreatment.

Shop Primer: Zinc-dust, zinc-oxide primer paint complying with performance requirements of FS TT-P-641, Type II.

PART 3 - EXECUTION

INSTALLATION

General: Install steel doors, frames, and accessories according to Shop Drawings, manufacturer's data, and as specified.

Placing Frames: Comply with provisions of SDI 105, unless otherwise indicated. Set frames accurately in position, plumbed, aligned, and braced securely until permanent anchors are set. After wall construction is completed, remove temporary braces and spreaders, leaving surfaces smooth and undamaged.

Except for frames located in existing concrete, masonry, or gypsum board assembly construction, place frames before constructing enclosing walls and ceilings.

In masonry construction, install at least 3 wall anchors per jamb adjacent to hinge location on hinge jamb and at corresponding heights on strike jamb. Acceptable anchors include masonry wire anchors and masonry T-shaped anchors.

At existing concrete or masonry construction, install at least 3 completed opening anchors per jamb adjacent to hinge location on hinge jamb and at corresponding heights on strike jamb. Set frames and secure to adjacent construction with bolts and masonry anchorage devices.

In metal-stud partitions, install at least 3 wall anchors per jamb at hinge and strike levels. In steel-stud partitions, attach wall anchors to studs with screws.

In in-place gypsum board partitions, install knock-down, slip-on, drywall frames.

Install fire-rated frames according to NFPA 80.

Door Installation: Fit hollow-metal doors accurately in frames, within clearances specified in ANSI/SDI 100.

Fire-Rated Doors: Install with clearances specified in NFPA 80.

Smoke-Control Doors: Comply with NFPA 105.

ADJUSTING AND CLEANING

Prime Coat Touchup: Immediately after erection, sand smooth any rusted or damaged areas of prime coat and apply touchup of compatible air-drying primer.

Protection Removal: Immediately before final inspection, remove protective wrappings from doors and frames.

END OF SECTION 08110

SECTION 08211 - FLUSH WOOD DOORS

PART 1 - GENERAL

RELATED DOCUMENTS

Drawings and general provisions of the Contract, including General and Supplementary Conditions and Division 1 Specification Sections, apply to this Section.

SUMMARY

This Section includes the following:

Solid-core doors with wood-veneer faces.

Factory finishing flush wood doors.

Factory fitting flush wood doors to frames and factory machining for hardware.

Louvers for flush wood doors.

Related Sections include the following:

Division 6 Section "Rough Carpentry" for nailers and blocking.

SUBMITTALS

Product Data: For each type of door. Include details of core and edge construction, trim for openings, and louvers.

Include factory-finishing specifications.

Shop Drawings: Indicate location, size, and hand of each door; elevation of each kind of door; construction details not covered in Product Data; location and extent of hardware blocking; and other pertinent data.

Indicate dimensions and locations of mortises and holes for hardware.

Indicate dimensions and locations of cutouts.

Indicate requirements for veneer matching.

Indicate doors to be factory finished and finish requirements.

Indicate fire ratings for fire doors.

Samples for Initial Selection: Color charts consisting of actual materials in small sections for the following:

Faces of factory-finished doors with transparent finish.

Samples for Verification: As follows:

Corner sections of doors approximately 8 by 10 inches (200 by 250 mm) with door faces and edgings representing the typical range of color and grain for each species of veneer and solid lumber required. Finish sample with same materials proposed for factory-finished doors.

Louver blade and frame sections, 6 inches (150 mm) long, for each material and finish specified.

QUALITY ASSURANCE

Source Limitations: Obtain flush wood doors through one source from a single manufacturer.

Quality Standard: Comply with the following standard:

AWI Quality Standard: AWI's "Architectural Woodwork Quality Standards" for grade of door, core, construction, finish, and other requirements.

ENVIRONMENTAL RESPONSIBILITY: Provide door manufactured with any of the following environmentally responsible core materials:

1. Particleboard Core: Forest Stewardship Council (PSC) certified.
2. Agrifiber Core: Contains rapidly renewable materials and recycled content.
3. Stave Lumber Core: Forest Stewardship Council (FSC) certified.
4. Structural Composite Lumber (SCL): Contains low emitting materials that reduce the quantity of indoor air contaminants.

DELIVERY, STORAGE, AND HANDLING

Protect doors during transit, storage, and handling to prevent damage, soiling, and deterioration. Comply with requirements of referenced standard and manufacturer's written instructions.

Individually package doors in plastic bags or cardboard cartons.

Individually package doors in cardboard cartons and wrap bundles of doors in plastic sheeting.

Comply with WIC's Technical Bulletin 420-R for delivery, storage, and handling of doors.

Mark each door with individual opening numbers used on Shop Drawings. Use removable tags or concealed markings.

PROJECT CONDITIONS

Environmental Limitations: Do not deliver or install doors until conditions for temperature and relative humidity have been stabilized and will be maintained in storage and installation areas during the remainder of the construction period to comply with requirements of the referenced quality standard for Project's geographical location.

WARRANTY

General Warranty: Door manufacturer's warranty specified in this Article shall not deprive the Owner of other rights the Owner may have under other provisions of the Contract Documents and shall be in addition to, and run concurrent with, other warranties made by the Contractor under requirements of the Contract Documents.

Door Manufacturer's Warranty: Submit written agreement on door manufacturer's standard form, signed by manufacturer, Installer, and Contractor, agreeing to repair or replace defective doors that have warped (bow, cup, or twist) more than 1/4 inch (6.35 mm) in a 42-by-84-inch (1067-by-2134-mm) section or that show telegraphing of core construction in face veneers exceeding 0.01 inch in a 3-inch (0.25 mm in a 75-mm) span, or do not comply with tolerances in referenced quality standard.

Warranty shall also include installation and finishing that may be required due to repair or replacement of defective doors.

Warranty shall be in effect during the following period of time after the date of Substantial Completion:

Solid-Core Interior Doors: Life of installation.

PART 2 - PRODUCTS

MANUFACTURERS

Available Manufacturers: Subject to compliance with requirements, manufacturers offering products that may be incorporated into the Work include, but are not limited to, the following:

Flush Wood Doors:

Algoma Hardwoods Inc.
Eggers Industries; Architectural Door Division.
Weyerhaeuser Co.

DOOR CONSTRUCTION, GENERAL

Doors for Transparent Finish: Comply with the following requirements:

Grade: Custom (Grade A faces).

Faces: White birch, rotary cut.

Match between Veneer Leaves: Book match.

Pair and Set Match: Provide for pairs of doors and for doors hung in adjacent sets.

SOLID-CORE DOORS

Solid (Non-Rated): AWI Section 1300, Type PC-5 - Particleboard.

Interior Veneer-Faced Doors: Comply with the following requirements:

Core: Particleboard core.

Edge Construction: At hinge stiles, provide manufacturer's standard laminated-edge construction with improved screw-holding capability and split resistance and with outer stile matching face veneer.

LOUVERS AND LIGHT FRAMES

Wood Louvers: Door manufacturer's standard solid wood louvers, unless otherwise indicated.

FABRICATION

Fabricate flush wood doors in sizes indicated for Project site fitting.

Factory fit doors to suit frame-opening sizes indicated, with the following uniform clearances and bevels, unless otherwise indicated:

Comply with clearance requirements of referenced quality standard for fitting. Comply with requirements of NFPA 80 for fire-rated doors.

Factory machine doors for hardware that is not surface applied. Locate hardware to comply with DHI-WDHS-3. Comply with final hardware schedules, door frame Shop Drawings, DHI A115-W series standards, and hardware templates.

Coordinate measurements of hardware mortises in metal frames to verify dimensions and alignment before factory machining.

Openings: Cut and trim openings through doors to comply with applicable requirements of referenced standards for kind(s) of door(s) required.

Light Openings: Trim openings with moldings of material and profile indicated.

Louvers: Factory install louvers in prepared openings.

Flash top of outswinging doors (with manufacturer's standard metal flashing).

PART 3 - EXECUTION

EXAMINATION

Examine installed door frames before hanging doors.

Verify that frames comply with indicated requirements for type, size, location, and swing characteristics and have been installed with plumb jambs and level heads.

Reject doors with defects.

Proceed with installation only after unsatisfactory conditions have been corrected.

INSTALLATION

Hardware: For installation, see Division 8 Section "Door Hardware."

Manufacturer's Written Instructions: Install wood doors to comply with manufacturer's written instructions, referenced quality standard, and as indicated.

Job-Fit Doors: Align and fit doors in frames with uniform clearances and bevels as indicated below; do not trim stiles and rails in excess of limits set by manufacturer or permitted with fire-rated doors. Machine doors for hardware. Seal cut surfaces after fitting and machining.

Clearances: Provide 1/8 inch (3.2 mm) at heads, jambs, and between pairs of doors. Provide 1/8 inch (3.2 mm) from bottom of door to top of decorative floor finish or covering. Where threshold is shown or scheduled, provide 1/4 inch (6.4 mm) from bottom of door to top of threshold.

Bevel non-fire-rated doors 1/8 inch in 2 inches (3-1/2 degrees) at lock and hinge edges.

Factory-Finished Doors: Restore finish before installation, if fitting or machining is required at Project site.

ADJUSTING AND PROTECTING

Operation: Rehang or replace doors that do not swing or operate freely.

Finished Doors: Refinish or replace doors damaged during installation.

Protect doors as recommended by door manufacturer to ensure that wood doors are without damage or deterioration at the time of Substantial Completion.

END OF SECTION 08211

FINISH HARDWARE

Section 08710

PART I - GENERAL

1.01 WORK INCLUDED

A. The work in this section shall include furnishing of all items of finish hardware as hereinafter specified or obviously necessary to complete the building, except those items that are specifically excluded from this section of the specification.

1.02 RELATED WORK SPECIFIED ELSEWHERE

A. Hollow Metal Doors and Frames
B. Aluminum Doors and Frames
C. Wood Doors and Frames

1.03 DESCRIPTION OF WORK

A. Furnish labor and material to complete hardware work indicated, as specified herein, or as may be required by actual conditions at building.
B. Include all necessary screws, bolts, expansion shields, other devices, if necessary, as required for proper hardware application. The hardware supplier shall assume all responsibility for correct quantities.
C. Hardware shall meet the requirements of Federal, State and Local codes having jurisdiction over this project, notwithstanding any real or apparent conflict therewith in these specifications.
D. Fire-rated openings:
   1. Provide hardware for fire-rated openings in compliance with A.I.A. (NBFU) Pamphlet No. 80, NFPA Standards NO. 101, UBC 702 (1997) and UL10C. This requirement takes precedence over other requirements for such hardware. Provide only hardware that has been tested and listed by UL for the types and sizes of doors required, and complies with the requirements of the door and door frame labels.
   2. Where panic exit devices are required on fire-rated doors, provide supplementary marking on door UL label indicating Fire Door to be equipped with fire exit hardware and provide UL label on exit device indicating “Fire Exit Hardware”.
E. Fasteners:
   1. Hardware as furnished shall conform to published templates generally prepared for machine screw installation.
   2. Furnish each item complete with all screws required for installation. Typically, all exposed screws installation.
   3. Insofar as practical, furnished concealed type fasteners for hardware units that have exposed screws shall be furnished with Phillips flat head screws, finished to match adjacent hardware.
   4. Door closers and exit devices to be installed with closed head through bolts (sex bolts).
F. Exterior openings
   1. Provide hardware for hurricane openings in compliance with local jurisdiction. This requirement takes precedence over other requirements for such hardware. Provide only hardware that has been tested and listed by local authority for the types and sizes of doors required, and complies with the requirements of the door and door frame. Coordinate Section (08710) Finish Hardware with the Hollow Metal Doors and Frames (08110) and Aluminum Doors and Frames (08210).

1.04 QUALITY ASSURANCE

A. The supplier to be a directly franchised distributor of the products to be furnished and have in their employ an AHC (Architectural Hardware Consultant). This person is to be available for consultation to the architect, owner and the general contractor at reasonable times during the course of work.
B. The finish hardware supplier shall prepare and submit to the architect six (6) copies of a complete schedule identifying each door and each set number, following the numbering system and not creating any separate system himself. He shall submit the schedule for review, make corrections as directed and resubmit the corrected schedule for final approval. Approval of schedule will not relieve Contractor of the responsibility for furnishing all necessary hardware, including the responsibility for furnishing correct quantities.
C. No manufacturing orders shall be placed until detailed schedule has been submitted to the architect and written approval received.
D. After hardware schedule has been approved, furnish templates required by manufacturing contractors for making proper provisions in their work for accurate fitting, finishing hardware setting. Furnish templates in ample time to facilitate progress of work.
E. Hardware supplier shall have an office and warehouse facilities to accommodate the materials used on this project. The supplier must be an authorized distributor of the products specified.
F. The hardware manufactures are to supply both a pre-installation class as well as a post-installation walk-thru. This is to insure proper installation and provide for any adjustments or replacements of hardware as required.

1.05 DELIVERY, STORAGE, AND HANDLING

A. Wrap, protect finishing hardware items for shipment. Deliver to manufacturing contractors hardware items required by them for their application; deliver balance of hardware to job; store in designated location. Each item shall be clearly marked with its intended location.

1.06 WARRANTY

A. The material furnished shall be warranted for one year after installation or longer as the individual manufacturer's warranty permits.
B. The manufacturer against failure due to defective materials and workmanship shall warrant overhead door closers in writing for a period of ten (10) years. Commencing on the Date of Final Completion and Acceptance, and in the event of failure, the manufacture is to promptly repair or replace the defective with no additional cost to the Owner.

PART II - PRODUCTS

2.01 ACCEPTABLE MANUFACTURERS

A. To the greatest extent possible, obtain each kind of hardware from only one manufacturer.
B. All numbers and symbols used herein have been taken from the current catalogues of the following manufacturers.

PRODUCT	ACCEPTABLE MANUFACTURER	ACCEPTABLE SUBSTITUTE
1) Hinges	Ives	Hager, Stanley, Bommer
2) Locks & Latches	Schlage Locks	None (Owners Standard)
3) Exit Devices	Von Duprin	None (Owners Standard)
4) Door Closers	LCN	None (Owners Standard)
5) Wall Stops/Floor Stops, Flushbolts	Ives	Rockwood, Hager
6) Kick Plates	Ives	Rockwood, Hager
7) Threshold/Weather-strip	National Guard	Pemko, Zero
8) Silencers	Ives	Rockwood, Hager
9) Key Cabinet	Lund	Key Control

C. If material manufactured by other than that specified or listed herewith as an equal, is to be bid upon, permission must be requested from the architect seven (7) days prior to bidding. If substitution is allowed, it will be so noted by addendum.

2.02 FINISH OF HARDWARE:

A. Exterior Hinges to be Stainless Steel (32D), Interior Hinges to be Satin Chrome (26D). Door Closers to be Aluminum. Locks to be Satin Chrome (26D), Exit Devices to be Satin Chrome (26D). Overhead Holders to be Satin Chrome (26D), Flat Goods to be Satin Chrome (26D) or Stainless Steel (32D) and the Thresholds to be Mill Finish Aluminum.

2.03 HINGES AND PIVOTS:

A. Exterior butts shall be Stainless Steel. Butts on all out swinging doors shall be furnished with non-removable pins (NRP).
B. Interior butts shall be as listed.
C. Doors 5’ or less in height shall have two (2) butts. Furnish one (1) additional butt for each 2’6” in height or fraction thereof. Dutch door shall have two (2) butts per leaf.

2.04 KEYING:

A. Equip locks and cylinders with Schlage Everest cylinders.
B. All bittings shall be issued by lock manufacture per owners instructions.
C. Provide Two (2) each change keys per lock and Six (6) each grand master, master keys, two (2) construction and two (2) permanent control keys.
D. Hardware supplier to provide temporary cylinders or cores during the construction phase. The contractor is to change out the temporary cylinders for the permanent cylinders.

2.05 LOCKSETS:

A. Locksets shall be Heavy Duty type, unless specified otherwise, in “L” and “ND” Series, Lever designs as manufactured by Schlage Lock Company.

1. Acceptable substitutions:
   A. None (Owners Standard)

2.06 EXIT DEVICES:

A. Exit devices shall be Von Duprin 98 Series in types and functions specified. All devices must be listed under “Panic Hardware” in accident equipment list of Underwriters Laboratories. All labeled doors with “Fire Exit Hardware” must have labels attached and be in strict accordance with Underwriters Laboratories.

B. Exit devices shall be tested to ANSI/BHMA A156.3 test requirements by a BHMA certified testing laboratory. A written certification showing successful completion of a minimum of 1,000,000 cycles must be provided.
C. Surface strikes shall be roller type and come complete with a plate underneath to prevent movement. And shall be provided with a dead-latching feature to prevent latch bolt tampering.

1. Acceptable substitutions:
   A. None (Owners Standard)

2.07 DOOR CLOSERS:

A. Closers shall be LCN 4000 Series having non-ferrous covers, forged steel arms separate valves for adjusting backcheck, closing and latching cycles and adjustable spring to provide up to 50% increase in spring power. Closers shall be furnished with parallel arm mounted on all doors opening into corridors or other public spaces and shall be mounted to permit 180 degrees door swing wherever wall conditions permit. Furnish with non-hold open arms unless otherwise indicated.

B. Door closer cylinders shall be of high strength cast iron construction to provide low wear operating capabilities of internal parts throughout the life of the installation. All door closers shall be tested to ANSI/BHMA A156.4 test requirements by a BHMA certified testing laboratory. A written certification showing successful completion of a minimum of 10,000,000 cycles must be provided.

C. Door closers shall utilize temperature stable fluid capable of withstanding temperature ranges of 120 degrees Fahrenheit to -30 degrees Fahrenheit, without requiring seasonal adjustment of closer speed to properly close the door. Closers for fire-rated doors shall be provided with temperature stabilizing fluid that complies with the standards UBC 7-2 (1997) and UL 10C.

D. Door closers shall incorporate tamper resistant non-critical screw valves of V-slot design to reduce possible clogging from particles within the closer. Closers shall have separate and independent screw valve adjustments for latch speed, general speed, and hydraulic backcheck. Backcheck shall be properly located so as to effectively slow the swing of the door at a minimum of 10 degrees in advance of the dead stop location to protect the door frame and hardware from damage. Pressure relief valves (PRV) are not acceptable.

1. Acceptable substitutions:
   A. None (Owners Standard)

2.08 TRIM AND PLATES:

A. Kick plates, mop plates, and armor plates, shall be .050 gauge with 32D finish. Kick plates to be 10” high, mop plates to be 4” high. All plates shall be two (2) inches less full width of door.
B. Push plates, pull plates, door pulls, and miscellaneous door trim shall be shown in the hardware schedule.

2.09 DOOR STOPS:

A. Doorstops shall be furnished for all doors to prevent damage to doors or hardware from striking adjacent walls or fixtures. Wall bumpers equal to Ives WS407 Series are preferred, but where not practical furnish floor stops equal to Ives FS436 or FS438 series. Where conditions prohibit the use of either wall or floor type stops, furnish surface mounted overhead stops equal to Glynn Johnson, 450 Series.

2.10 THRESHOLDS AND WEATHERSTRIP:

A. Thresholds and weather-strip shall be as listed in the hardware schedule.

2.11 DOOR SILENCERS:

A. Furnish rubber door silencers equal to Ives SR64 for all new interior hollow metal frames, (2) per pair and (3) per single door frame.

PART III - EXECUTION

3.01 INSTALLATION:

A. All hardware shall be applied and installed in accordance with the Finish Hardware schedule. Care shall be exercised not to mar or damage adjacent work.
B. Contractor to provide a secure lock-up for hardware delivered to the project but not yet installed. Control the handling and installation of hardware items that are not immediately replaceable, so that the completion of the work will not be delayed by hardware losses both before and after installation.
C. No hardware is to be installed until the hardware manufactures have provided a pre-installation class to insure proper installation of the specified products. A post installation inspection by a manufacturer's representative will be provided to insure proper installation.

3.02 ADJUSTING AND CLEANING:

A. Contractor shall adjust all hardware in strict compliance with manufacturer's instructions. Prior to turning project to owner, contractor shall clean and make any final adjustments to the finish hardware.

3.03 PROTECTION:

A. Contractor shall protect the hardware, as it is stored on construction site in a covered and dry place.
B. Contractor shall protect exposed hardware installed on doors during the construction phase.

3.04 KEY CABINET:

A. Set up and index one (1) Key Cabinet that allows room for expansion for 150% of the number of keys for the project.

3.05 HARDWARE SCHEDULE:

A. The following schedule is furnished for whatever assistance it may afford the contractor; do not consider it as entirely inclusive. Should any particular door or item be omitted in any scheduled hardware group, provide door or item with hardware same as required for similar purposes. Quantities listed are for each pair of doors or for each single door.
B. This hardware schedule was prepared by.

Ingersoll Rand Security Technology
735 W. SR 434, Suite H
Longwood, FL 32750
Ph: 407-571-2000
Fax 407-571-2006

Door No	HwSet	Door No	HwSet	Door No	HwSet
100	**01**				
101	**01**				
102	11				
103	14				
104	13				
105	04				
106	10				
107	14				
108	08				
109	11				
110	15				
111	15				
112	11				
113	08				
114	08				
115	11				
116	11				
117	11				
118	04				
119	09				
120	07				
121	05				
122	06				
122A	06				
123	03				
124	09				
125	04				
126	03				
127	03				
200	01				
201	12				
202	12				
203	09				
204	11				
205	11				
206	11				
207	04				
208	01				
209	11				

Hardware Group No. 01

Provide each PR door(s) with the following:

Quantity		Description	Model Number	Finish	Mfr
6	EA	HINGE	3CB1 4.5 X 4.5 NRP	630	IVE
1	EA	PANIC HARDWARE	1690EO	628	FAL
1	EA	PANIC HARDWARE	1692NL-OP	628	FAL
1	EA	RIM CYLINDER	20-057-ICX	626	SCH
1	EA	CORE ONLY	23-030	626	SCH
2	EA	OFFSET DOOR PULL	8190-0-O	630	IVE
2	EA	SURFACE CLOSER	4041	689	LCN
1	EA	THRESHOLD	896V	AL	NGP
1	EA	BALANCE	FURNISHED UNDER SECTION 08400		B/O

Hardware Group No. 02

Provide each SGL door(s) with the following:

Quantity		Description	Model Number	Finish	Mfr
3	EA	HINGE	3CB1 4.5 X 4.5 NRP	630	IVE
1	EA	PANIC HARDWARE	1692NL-OP	628	FAL
1	EA	RIM CYLINDER	20-057-ICX	626	SCH
1	EA	CORE ONLY	23-030	626	SCH
1	EA	OFFSET DOOR PULL	8190-0-O	630	IVE
1	EA	SURFACE CLOSER	4041	689	LCN
1	EA	THRESHOLD	896V	AL	NGP
1	EA	BALANCE	FURNISHED UNDER SECTION 08400		B/O

Hardware Group No. 03

Provide each PR door(s) with the following:

Quantity		Description	Model Number	Finish	Mfr
6	EA	HINGE	3CB1 4.5 X 4.5 NRP	630	IVE
1	EA	MULLION STABILIZER	154	689	VON
1	EA	MULLION	KR9954	689	VON
1	EA	PANIC HARDWARE	98EO	626	VON
1	EA	PANIC HARDWARE	98NL	626	VON
1	EA	RIM CYLINDER	20-057-ICX	626	SCH
1	EA	MORTISE CYLINDER	20-061-ICX	626	SCH
2	EA	CORE ONLY	23-030	626	SCH
2	EA	SURFACE CLOSER	4041	689	LCN
2	EA	KICK PLATE	8400 10" X 2" LDW	630	IVE
2	EA	WALL STOP	WS407CCV	630	IVE
2	SET	SEALS	5050B	BRN	NGP
1	EA	THRESHOLD	896V	AL	NGP

Hardware Group No. 04
Provide each PR door(s) with the following:

Quantity		Description	Model Number	Finish	Mfr
6	EA	HINGE	3CB1 4.5 X 4.5 NRP	630	IVE
2	EA	SURFACE BOLT	SB360T-12	603	IVE
1	EA	STOREROOM LOCK	L9080P 06A	626	SCH
2	**EA**	**SURFACE CLOSER**	**4041 CUSH**	**689**	**LCN**
2	EA	KICK PLATE	8400 10" X 1" LDW	630	IVE
1	SET	SEALS	5050B	BRN	NGP
1	EA	DRIP CAP	16A	AL	NGP
1	EA	THRESHOLD	896V	AL	NGP
1	EA	METAL Z-ASTRAGAL	BY DOOR SUPPLIER	GRY	B/O

Hardware Group No. 05
Provide each SGL door(s) with the following:

Quantity		Description	Model Number	Finish	Mfr
3	EA	HINGE	3CB1 4.5 X 4.5 NRP	630	IVE
1	EA	PANIC HARDWARE	98NL	626	VON
1	EA	RIM CYLINDER	20-057-ICX	626	SCH
1	EA	CORE ONLY	23-030	626	SCH
1	EA	SURFACE CLOSER	4041	689	LCN
1	EA	KICK PLATE	8400 10" X 2" LDW	630	IVE
1	EA	WALL STOP	WS407CCV	630	IVE
1	SET	SEALS	5050B	BRN	NGP
1	EA	DRIP CAP	16A	AL	NGP
1	EA	THRESHOLD	896V	AL	NGP

Hardware Group No. 06
Provide each SGL door(s) with the following:

Quantity		Description	Model Number	Finish	Mfr
3	EA	HINGE	3CB1 4.5 X 4.5 NRP	630	IVE
1	EA	PRIVACY LOCK	L9496P 06A	626	SCH
1	EA	SURFACE CLOSER	4041	689	LCN
1	EA	KICK PLATE	8400 10" X 2" LDW	630	IVE
1	EA	WALL STOP	WS407CCV	630	IVE
1	SET	SEALS	5050B	BRN	NGP
1	EA	DRIP CAP	16A	AL	NGP
1	EA	THRESHOLD	896V	AL	NGP
1	**EA**	**LOCK GUARD**	**LG1**	**630**	**IVE**

Hardware Group No. 07

Provide each SGL door(s) with the following:

Quantity		Description	Model Number	Finish	Mfr
3	EA	HINGE	3CB1 4.5 X 4.5 NRP	630	IVE
1	EA	STOREROOM LOCK	L9080P 06A	626	SCH
1	EA	SURFACE CLOSER	4041	689	LCN
1	EA	KICK PLATE	8400 10" X 2" LDW	630	IVE
1	EA	WALL STOP	WS407CCV	630	IVE
1	SET	SEALS	5050B	BRN	NGP
1	EA	DRIP CAP	16A	AL	NGP
1	EA	THRESHOLD	896V	AL	NGP
1	**EA**	**LOCK GUARD**	**LG1**	**630**	**IVE**

Hardware Group No. 08

Provide each PR door(s) with the following:

Quantity		Description	Model Number	Finish	Mfr
6	EA	HINGE	3CB1 4.5 X 4.5	652	IVE
2	EA	MULLION STABILIZER	154	689	VON
1	EA	MULLION	KR9954	689	VON
2	EA	FIRE EXIT HARDWARE	98L-F 996L	626	VON
2	EA	RIM CYLINDER	20-057-ICX	626	SCH
1	EA	MORTISE CYLINDER	20-061-ICX	626	SCH
3	EA	CORE ONLY	23-030	626	SCH
2	EA	SURFACE CLOSER	4041	689	LCN
2	EA	KICK PLATE	8400 10" X 2" LDW	630	IVE
2	EA	WALL STOP	WS407CCV	630	IVE
2	SET	SEALS	5050B	BRN	NGP

Hardware Group No. 09

Provide each PR door(s) with the following:

Quantity		Description	Model Number	Finish	Mfr
6	EA	HINGE	3CB1 4.5 X 4.5	652	IVE
2	EA	MANUAL FLUSH BOLT	FB458	626	IVE
1	EA	DUST PROOF STRIKE	DP1	626	IVE
1	EA	STOREROOM LOCK	ND80PD RHO	626	SCH
2	**EA**	**SURFACE CLOSER**	**4041 CUSH**	**689**	**LCN**
2	EA	KICK PLATE	8400 10" X 1" LDW	630	IVE
1	SET	SEALS	5050B	BRN	NGP
1	EA	METAL Z-ASTRAGAL	BY DOOR SUPPLIER	GRY	B/O

Hardware Group No. 10

Provide each SGL door(s) with the following:

Quantity		Description	Model Number	Finish	Mfr
3	EA	HINGE	3CB1 4.5 X 4.5	652	IVE
1	EA	STOREROOM LOCK	ND80PD RHO	626	SCH
1	EA	SURFACE CLOSER	4041	689	LCN
1	EA	KICK PLATE	8400 10" X 2" LDW	630	IVE
1	EA	WALL STOP	WS407CCV	630	IVE
1	SET	SEALS	5050B	BRN	NGP

Hardware Group No. 11

Provide each SGL door(s) with the following:

Quantity		Description	Model Number	Finish	Mfr
3	EA	HINGE	3CB1 4.5 X 4.5	652	IVE
1	EA	CLASSROOM LOCK	ND70PD RHO	626	SCH
1	EA	SURFACE CLOSER	4041	689	LCN
1	EA	KICK PLATE	8400 10" X 2" LDW	630	IVE
1	EA	WALL STOP	WS407CCV	630	IVE
1	SET	SEALS	5050B	BRN	NGP

Hardware Group No. 12
Provide each SGL door(s) with the following:

Quantity		Description	Model Number	Finish	Mfr
3	EA	HINGE	3CB1 4.5 X 4.5	652	IVE
1	EA	ENTRANCE LOCK	ND53PD RHO	626	SCH
1	EA	SURFACE CLOSER	4041	689	LCN
1	EA	KICK PLATE	8400 10" X 2" LDW	630	IVE
1	EA	WALL STOP	WS407CCV	630	IVE
1	SET	SEALS	5050B	BRN	NGP

Hardware Group No. 13
Provide each SGL door(s) with the following:

Quantity		Description	Model Number	Finish	Mfr
3	EA	HINGE	3CB1 4.5 X 4.5	652	IVE
1	EA	PRIVACY SET	ND40S RHO	626	SCH
1	EA	SURFACE CLOSER	4041	689	LCN
1	EA	KICK PLATE	8400 10" X 2" LDW	630	IVE
1	EA	WALL STOP	WS407CCV	630	IVE
1	SET	SEALS	5050B	BRN	NGP

Hardware Group No. 14
Provide each SGL door(s) with the following:

Quantity		Description	Model Number	Finish	Mfr
3	EA	HINGE	3CB1 4.5 X 4.5	652	IVE
1	EA	PUSH PLATE	8200 6" X 16"	630	IVE
1	EA	PULL PLATE	8303-0 4" X 16"	630	IVE
1	EA	SURFACE CLOSER	4041	689	LCN
1	EA	KICK PLATE	8400 10" X 2" LDW	630	IVE
1	EA	WALL STOP	WS407CCV	630	IVE
1	SET	SEALS	5050B	BRN	NGP

Hardware Group No. 15
Provide each SGL door(s) with the following:

Quantity		Description	Model Number	Finish	Mfr
3	EA	HINGE	3PB1 4.5 X 4.5	652	IVE
1	EA	ENTRANCE LOCK	ND53PD RHO	626	SCH
1	EA	WALL STOP	WS407CCV	630	IVE
3	EA	SILENCER	SR64	GRY	IVE

SECTION 08800 - GLAZING

PART 1 - GENERAL

RELATED DOCUMENTS

Drawings and general provisions of the Contract, including General and Supplementary Conditions and Division 1 Specification Sections, apply to this Section.

SUMMARY

This Section includes glazing for the following products, including those specified in other Sections where glazing requirements are specified by reference to this Section:

Entrances and other doors.

Storefront construction.

DEFINITIONS

Manufacturer is used in this Section to refer to a firm that produces primary glass or fabricated glass as defined in the referenced glazing standard.

Deterioration of Laminated Glass: Defects developed from normal use that are attributed to the manufacturing process and not to glass breakage and practices for maintaining and cleaning laminated glass contrary to manufacturer's directions. Defects include edge separation, delamination materially obstructing vision through glass, and blemishes exceeding those allowed by referenced laminated glass standard.

SYSTEM PERFORMANCE REQUIREMENTS

General: Provide glazing systems that are produced, fabricated, and installed to withstand normal thermal movement, wind loading, and impact loading (where applicable), without failure including loss or glass breakage attributable to the following: defective manufacture, fabrication, and installation; failure of sealants or gaskets to remain watertight and airtight; deterioration of glazing materials; and other defects in construction.

Glass Design: Glass thicknesses indicated on Drawings are for detailing only. Confirm glass thicknesses by analyzing Project loads and in-service conditions. Provide glass lites for the various size openings in the thicknesses and strengths (annealed or heat-treated) to meet or exceed the following criteria:

Minimum glass thickness, nominally, of lites in exterior walls is 6.0 mm (0.23 inch).

Tinted and heat-absorbing glass thicknesses for each tint indicated are the same throughout Project.

Normal thermal movement results from the following maximum change (range) in ambient and surface temperatures acting on glass-framing members and glazing components. Base

engineering calculation on materials' actual surface temperatures due to both solar heat gain and nighttime sky heat loss.

Temperature Change (Range): 120 deg F (67 deg C), ambient; 180 deg F (100 deg C), material surfaces.

SUBMITTALS

General: Submit the following according to Conditions of Contract and Division 1 Specification Sections.

Product data for each glass product and glazing material indicated.

Samples for verification purposes of 12-inch-square samples of each type of glass indicated except for clear monolithic glass products, and 12-inch-long samples of each color required (except black) for each type of sealant or gasket exposed to view. Install sealant or gasket sample between two strips of material representative in color of the adjoining framing system.

Product certificates signed by glazing materials manufacturers certifying that their products comply with specified requirements.

Separate certifications are not required for glazing materials bearing manufacturer's permanent labels designating type and thickness of glass, provided labels represent a quality control program of a recognized certification agency or independent testing agency acceptable to authorities having jurisdiction.

Compatibility and adhesion test reports from sealant manufacturer indicating that glazing materials were tested for compatibility and adhesion with glazing sealants. Include sealant manufacturer's interpretation of test results relative to sealant performance and recommendations for primers and substrate preparation needed for adhesion.

Compatibility test report from manufacturer of insulating glass edge sealant indicating that glass edge sealants were tested for compatibility with other glazing materials including sealants, glazing tape, gaskets, setting blocks, and edge blocks.

Product test reports for each type of glazing sealant and gasket indicated, evidencing compliance with requirements specified.

Maintenance data for glass and other glazing materials to include in Operating and Maintenance Manual specified in Division 1.

QUALITY ASSURANCE

Glazing Publications: Comply with published recommendations of glass product manufacturers and organizations below, except where more stringent requirements are indicated. Refer to these publications for glazing terms not otherwise defined in this Section or in referenced standards.

FGMA Publications: "FGMA Glazing Manual."

AAMA Publications: AAMA TIR-A7 "Sloped Glazing Guidelines" and "Glass Design for Sloped Glazing."

LSGA Publications: "LSGA Design Guide."

SIGMA Publications: TM-3000 "Vertical Glazing Guidelines" and TB-3001 "Sloped Glazing Guidelines."

Safety Glass: Products complying with ANSI Z97.1 and testing requirements of 16 CFR Part 1201 for Category II materials.

Subject to compliance with requirements, provide safety glass permanently marked with certification label of Safety Glazing Certification Council (SGCC) or other certification agency acceptable to authorities having jurisdiction.

Glazier Qualifications: Engage an experienced glazier who has completed glazing similar in material, design, and extent to that indicated for Project with a record of successful in-service performance.

Single-Source Responsibility for Glass: Obtain glass from one source for each product indicated below:

Primary glass of each (ASTM C 1036) type and class indicated.

Single-Source Responsibility for Glazing Accessories: Obtain glazing accessories from one source for each product and installation method indicated.

Field-Constructed Mockups: Prior to glazing, erect mockups for each glass product indicated below to verify selections made under sample submittals and to demonstrate aesthetic effects and quality of materials and execution. Build mockups to comply with the following requirements, using materials indicated for final unit of Work:

Glass Products: Erect mockups with the following kinds of glass to match glazing systems required for Project, including typical lite size, framing systems, and glazing methods:

Heat-strengthened coated glass.

Fully tempered glass.

Pre-Installation Conference: Conduct conference at Project site to comply with requirements of Division 1 Section "Project Meetings."

DELIVERY, STORAGE, AND HANDLING

Protect glazing materials to comply with manufacturer's directions and as needed to prevent damage to glass and glazing materials from condensation, temperature changes, direct exposure to sun, or other causes.

PROJECT CONDITIONS

Environmental Conditions: Do not proceed with glazing when ambient and substrate temperature conditions are outside the limits permitted by glazing materials manufacturer or when glazing channel substrates are wet from rain, frost, condensation, or other causes.

Install liquid sealants at ambient and substrate temperatures above 40 deg F (4.4 deg C).

WARRANTY

General: Warranties specified in this Article shall not deprive the Owner of other rights the Owner may have under other provisions of the Contract Documents and will be in addition to and run concurrent with other warranties made by the Contractor under requirements of the Contract Documents.

Manufacturer's Warranty on Coated Glass Products: Submit written warranty signed by coated glass manufacturer agreeing to furnish replacements for those coated glass units that deteriorate as defined in "Definitions" article, f.o.b. point of manufacture, freight allowed Project site, within specified warranty period indicated below. Warranty covers only deterioration due to normal conditions of use and not to handling, installing, and cleaning practices contrary to glass manufacturer's published instructions.

Warranty Period: Manufacturer's standard but not less than 5 years after date of Substantial Completion.

PART 2 - PRODUCTS

MANUFACTURERS

Available Products: Subject to compliance with requirements, products that may be incorporated in the Work include, but are not limited to, the products specified in Product Data Sheets at end of this Section.

PRIMARY FLOAT GLASS PRODUCTS

HEAT-TREATED LAMINATE SAFETY GLASS

Coated, Tinted, Heat-Treated Laminate Safety Glass: ASTM C 1048, Condition A (uncoated surfaces), Type I (transparent glass, flat), Class 3 tinted, Quality q3, glazing select, with tint color and performance characteristics for 9/16” exterior and 5/16” interior glass matching those indicated for annealed primary tinted float glass; kind as indicated below:

Kind FT (fully tempered) where indicated.

COLORS: Selected from manufacturer standard ranges of colors.

WIRED GLASS

Wired Glass: ASTM C 1036, Type II (patterned and wired glass, flat), Class 1 (clear), Quality q8

(glazing); 1/4” thick; of form and mesh pattern indicated below:

Polished Wired Glass: Form 1 (wired, polished both sides), and as follows:

Mesh m1 (diamond).

Manufacturers: Subject to compliance with requirements, provide heat-treated glass by one of the following companies.

AFG Industries, Inc.
PPG Industries, Inc.
Tempglass.

ELASTOMERIC GLAZING SEALANTS

General: Provide products of type indicated, complying with the following requirements:

Suitability: Comply with sealant and glass manufacturer's recommendations for selecting glazing sealants and tapes that are suitable for applications indicated and conditions existing at time of installation.

Colors: Provide color of exposed joint sealants to comply with the following:

Provide selections made by Architect from manufacturer's full range of standard colors for products of type indicated.

Elastomeric Glazing Sealant Standard: Provide manufacturer's standard chemically curing, elastomeric sealants of base polymer indicated that comply with ASTM C 920 requirements indicated on each Elastomeric Glazing Sealant Product Data Sheet at the end of this Section, including those referencing ASTM classifications for Type, Grade, Class and Uses.

Additional Movement Capability: Where additional movement capability is specified in Elastomeric Glazing Sealant Product Data Sheet, provide products, when tested for adhesion and cohesion under maximum cyclic movement per ASTM C 719, with the capability to withstand the specified percentage change in the joint width existing at time of installation and remain in compliance with other requirements of ASTM C 920 for uses indicated.

Glazing Sealant for Fire-Resistant Glazing Products: Identical to product used in test assembly to obtain fire-resistive rating.

GLAZING TAPES

Back-Bedding Mastic Glazing Tape: Preformed, butyl-based elastomeric tape with a solids content of 100 percent, nonstaining and nonmigrating in contact with nonporous surfaces, with or without spacer rod as recommended by tape and glass manufacturers for application indicated, packaged on rolls with a release paper backing, and complying with AAMA 800 for products indicated below:

AAMA 804.1.

AAMA 806.1.

AAMA 807.1.

Expanded Cellular Glazing Tape: Closed-cell, polyvinyl chloride foam tape, factory coated with adhesive on both surfaces, packaged on rolls with release liner protecting adhesive, and complying with AAMA 800 for product 810.5.

Available Products: Subject to compliance with requirements, glazing tape that may be incorporated in the Work include, but is not limited to, the following:

Back-Bedding Mastic Glazing Tape With Spacer Rod:

PTI 303 Glazing Tape (with shim), Protective Treatments, Inc.
Pre-shimmed Tremco 440 Tape, Tremco, Inc.
PTI 606 Architectural Sealant Tape, Protective Treatments, Inc.

Expanded Cellular Glazing Tape:

Norseal V-980 Closed-Cell Glazing Tape, Norton Company.

GLAZING GASKETS

Lock-Strip Gaskets: Neoprene extrusions in size and shape indicated, fabricated into frames with molded corner units and zipper lock strips, complying with ASTM C 542, black.

Dense Compression Gaskets: Molded or extruded gaskets of material indicated below, complying with standards referenced with name of elastomer indicated below, and of profile and hardness required to maintain watertight seal:

Neoprene, ASTM C 864.

Soft Compression Gaskets: Extruded or molded closed-cell, integral-skinned gaskets of material indicated below, complying with ASTM C 509, Type II, black, and of profile and hardness required to maintain watertight seal:

Neoprene.

Available Manufacturers: Subject to compliance with requirements, manufacturers offering products that may be incorporated in the work include, but are not limited to, the following companies.

Manufacturers: Subject to compliance with requirements, provide products by one of the following companies.

Lock-Strip Gaskets:

Stanlock Div., Griffith Rubber Mills.

Preformed Gaskets:

Advanced Elastomer Systems, L.P.
Schnee-Morehead, Inc.
Tremco, Inc.

MISCELLANEOUS GLAZING MATERIALS

General: Provide products of material, size, and shape complying with referenced glazing standard, requirements of manufacturers of glass and other glazing materials involved for glazing application indicated, and with a proven record of compatibility with surfaces contacted in installation.

Cleaners, Primers and Sealers: Type recommended by sealant or gasket manufacturer.

Setting Blocks: Elastomeric material with a Shore A durometer hardness of 85 plus or minus 5.
Spacers: Elastomeric blocks or continuous extrusions with a Shore A durometer hardness required by glass manufacturer to maintain glass lites in place for installation indicated.

Edge Blocks: Elastomeric material of hardness needed to limit glass lateral movement (side-walking).

Plastic Foam Joint Fillers: Preformed, compressible, resilient, nonstaining, nonextruding, nonoutgassing, strips of closed-cell plastic foam of density, size, and shape to control sealant depth and otherwise contribute to produce optimum sealant performance.

FABRICATION OF GLASS AND OTHER GLAZING PRODUCTS

Fabricate glass and other glazing products in sizes required to glaze openings indicated for Project, with edge and face clearances, edge and surface conditions, and bite complying with recommendations of product manufacturer and referenced glazing standard as required to comply with system performance requirements.

Clean cut or flat grind vertical edges of butt-glazed monolithic lites in a manner that produces square edges with slight kerfs at junctions with indoor and outdoor faces.

PART 3 - EXECUTION

EXAMINATION

Examine glass framing, with glazier present, for compliance with the following:

Manufacturing and installation tolerances, including those for size, squareness, offsets at corners.

Presence and functioning of weep system.

Minimum required face or edge clearances.

Effective sealing between joints of glass-framing members.

Do not proceed with glazing until unsatisfactory conditions have been corrected.

PREPARATION

Clean glazing channels and other framing members receiving glass immediately before glazing. Remove coatings that are not firmly bonded to substrates.

GLAZING, GENERAL

Comply with combined recommendations of manufacturers of glass, sealants, gaskets, and other glazing materials, except where more stringent requirements are indicated, including those in referenced glazing publications.

Glazing channel dimensions as indicated on Drawings provide necessary bite on glass, minimum edge and face clearances, and adequate sealant thicknesses, with reasonable tolerances. Adjust as required by Project conditions during installation.

Protect glass from edge damage during handling and installation as follows:

Use a rolling block in rotating glass units to prevent damage to glass corners. Do not impact glass with metal framing. Use suction cups to shift glass units within openings; do not raise or drift glass with a pry bar. Rotate glass lites with flares or bevels on bottom horizontal edges so edges are located at top of opening, unless otherwise indicated by manufacturer's label.

Remove damaged glass from Project site and legally dispose of off site. Damaged glass is glass with edge damage or other imperfections that, when installed, weaken glass and impair performance and appearance.

Apply primers to joint surfaces where required for adhesion of sealants, as determined by preconstruction sealant-substrate testing.

Install elastomeric setting blocks in sill rabbets, sized and located to comply with referenced glazing standard, unless otherwise required by glass manufacturer. Set blocks in thin course of compatible sealant suitable for heel bead.

Do not exceed edge pressures stipulated by glass manufacturers for installing glass lites.

Provide spacers for glass sizes larger than 50 united inches (length plus height) as follows:

Locate spacers inside, outside, and directly opposite each other. Install correct size and spacing to preserve required face clearances, except where gaskets and glazing tapes are used that have demonstrated ability to maintain required face clearances and comply with system performance requirements.

Provide 1/8-inch minimum bite of spacers on glass and use thickness equal to sealant width.

With glazing tape, use thickness slightly less than final compressed thickness of tape.

Provide edge blocking to comply with requirements of referenced glazing publications, unless otherwise required by glass manufacturer.

Set glass lites in each series with uniform pattern, draw, bow, and similar characteristics.

Where wedge-shaped gaskets are driven into one side of channel to pressurize sealant or gasket on opposite side, provide adequate anchorage so gasket cannot walk out when installation is subjected to movement.

Square cut wedge-shaped gaskets at corners and install gaskets in manner recommended by gasket manufacturer to prevent corners from pulling away; seal corner joints and butt joints with sealant recommended by gasket manufacturer.

TAPE GLAZING

Position tapes on fixed stops so that when compressed by glass their exposed edges are flush with or protrude slightly above sightline of stops.

Install tapes continuously but not in one continuous length. Do not stretch tapes to make them fit opening.

Where framing joints are vertical, cover these joints by applying tapes to heads and sills first and then to jambs. Where framing joints are horizontal, cover these joints by applying tapes to jambs and then to heads and sills.

Place joints in tapes at corners of opening with adjoining lengths butted together, not lapped. Seal joints in tapes with compatible sealant approved by tape manufacturer.

Do not remove release paper from tape until just before each lite is installed.

Apply heel bead of elastomeric sealant.

Center glass lites in openings on setting blocks and press firmly against tape by inserting dense compression gaskets formed and installed to lock in place against faces of removable stops. Start gasket applications at corners and work toward centers of openings.

Apply cap bead of elastomeric sealant over exposed edge of tape.

GASKET GLAZING (DRY)

Fabricate compression gaskets in lengths recommended by gasket manufacturer to fit openings exactly, with stretch allowance during installation.

Secure compression gaskets in place with joints located at corners to compress gaskets producing a weathertight seal without developing bending stresses in glass. Seal gasket joints with sealant recommended by gasket manufacturer.

Install gaskets so they protrude past face of glazing stops.

SEALANT GLAZING (WET)

Install continuous spacers between glass lites and glazing stops to maintain glass face clearances and to prevent sealant from extruding into glass channel weep systems until sealants cure. Secure spacers in place and in position to control depth of installed sealant relative to edge clearance for optimum sealant performance.

Force sealants into glazing channels to eliminate voids and to ensure complete wetting or bond of sealant to glass and channel surfaces.

Tool exposed surfaces of sealants to provide a substantial wash away from glass. Install pressurized gaskets to protrude slightly out of channel to eliminate dirt and moisture pockets.

LOCK-STRIP GASKET GLAZING

Comply with ASTM C 716 and gasket manufacturer's printed recommendations. Provide supplementary wet seal and weep system unless otherwise indicated.

PROTECTION AND CLEANING

Protect exterior glass from breakage immediately after installation by attaching crossed streamers to framing held away from glass. Do not apply markers to glass surface. Remove nonpermanent labels, and clean surfaces.

Protect glass from contact with contaminating substances resulting from construction operations including weld splatter. If, despite such protection, contaminating substances do come into contact with glass, remove them immediately as recommended by glass manufacturer.

Examine glass surfaces adjacent to or below exterior concrete and other masonry surfaces at frequent intervals during construction, but not less than once a month, for build-up of dirt, scum, alkali deposits, or stains, and remove as recommended by glass manufacturer.

Remove and replace glass that is broken, chipped, cracked, abraded, or damaged in any way, including natural causes, accidents and vandalism, during construction period.

Wash glass on both faces in each area of Project not more than 4 days prior to date scheduled for inspections that establish date of Substantial Completion. Wash glass as recommended by glass manufacturer.

END OF SECTION 08800

SECTION 08920 - GLAZED ALUMINUM CURTAIN WALLS

PART 1 - GENERAL

RELATED DOCUMENTS

Drawings and general provisions of the Contract, including General and Supplementary Conditions and Division 1 Specification Sections, apply to this Section.

SUMMARY

This Section includes the following:

Glazed aluminum curtain wall, stick system installation.

Related Sections: The following Sections contain requirements that relate to this Section:

Division 7 Section "Joint Sealants" for joint sealants installed as part of glazed aluminum curtain wall system.

Division 8 Section "Aluminum Entrances and Storefronts."

Division 8 Section "Glazing."

SYSTEM DESCRIPTION

General: Provide glazed aluminum curtain wall system that has the following capabilities based on testing manufacturer's standard units in assemblies similar to those indicated for this Project:

Withstands loads and thermal and structural movement requirements indicated without failure. Failure includes the following:

Air infiltration and water penetration exceeding specified limits.

Framing members transferring stresses, including those caused by thermal and structural movement, to glazing units.

Glazing is physically and thermally isolated from framing members.

System is pressure equalized at its interior face.

System is reglazable from the interior or exterior.

Wind Loads: Provide glazed aluminum curtain wall system, including anchorage, capable of withstanding wind-load design pressures calculated according to requirements of authorities having jurisdiction or the American Society of Civil Engineers' ASCE 7, "Minimum Design Loads for Buildings and Other Structures," 6.4.2, "Analytical Procedure," whichever are more stringent.

Deflection of framing members in a direction normal to wall plane is limited to 1/360 of clear span, 3/4 inches (19 mm) maximum, where plaster or gypsum board surfaces are subject to bending.

Deflection of framing members overhanging an anchor point is limited to 2 times the length of the cantilevered member, divided by 175.

Test Performance: Provide glazed aluminum curtain wall system that does not evidence material failures, structural distress, or permanent deformation of main framing members exceeding 0.2 percent of clear span when tested according to ASTM E 330.

Test Pressure: 150 percent of inward and outward wind-load design pressures.

Duration: As required by design wind velocity; fastest 1 mile (1.609 km) of wind for relevant exposure category.

Dead Loads: Provide glazed aluminum curtain wall system members that do not deflect an amount which will reduce glazing bite below 75 percent of design dimension when carrying full dead load. Provide a minimum 1/8-inch (3.18-mm) clearance between members and top of fixed panels, glazing, or other fixed part immediately below. Provide a minimum 1/16-inch (1.59-mm) clearance between members and operable windows and doors.

Live Loads: Provide glazed aluminum curtain wall system, including anchorage, that accommodates supporting structure's deflection from uniformly distributed and concentrated live loads indicated without failure of materials or permanent deformation.

Air Infiltration: Provide glazed aluminum curtain wall system with permanent resistance to air leakage through system of not more than 0.06 cfm/sq. ft. (0.3 L/s/sq. m) of fixed wall area when tested according to ASTM E 283 at a static-air-pressure difference of 6.24 lbf/sq. ft. (299 Pa).

Provide operable windows with permanent resistance to air leakage complying with AAMA 101 requirements for types of windows indicated.

Water Penetration: Provide glazed aluminum curtain wall system that does not evidence water leakage when tested according to ASTM E 331 at minimum differential pressure of 20 percent of inward acting wind-load design pressure as defined by ASCE 7, "Minimum Design Loads for Buildings and Other Structures," but not less than 10 lbf/sq. ft. (479 Pa).

Thermal Movements: Provide glazed aluminum curtain wall system, including anchorage, that accommodates thermal movements of system and supporting elements resulting from the following maximum change (range) in ambient and surface temperatures without buckling, damaging stresses on glazing, failure of joint sealants, damaging loads on fasteners, noise or vibration, and other detrimental effects.

Temperature Change (Range): 120 deg F (67 deg C), ambient; 180 deg F (100 deg C), material surfaces.

Structural Support Movement: Provide glazed aluminum curtain wall system that accommodates structural movements including, but not limited to, sway, twist, column shortening, long-term creep, and deflection.

Condensation Resistance: Provide glazed aluminum curtain wall system with condensation-resistance factor (CRF) of not less than 55 when tested according to AAMA 1503.1.

Average Thermal Conductance: Provide glazed aluminum curtain wall system with an average U-value of not more than 0.66 Btu/sq. ft. x h x deg F (3.75 W/sq. m x K) when tested according to

AAMA 1503.1.

Sound Transmission: Provide glazed aluminum curtain wall system with average sound transmission loss through system of not less than 34 decibels (dB) when tested according to ASTM E 90.

Dimensional Tolerances: Provide glazed aluminum curtain wall system, including anchorage, that accommodates dimensional tolerances of building frame and other adjacent construction.

SUBMITTALS

General: Submit each item in this Article according to the Conditions of the Contract and Division 1 Specification Sections.

Product Data for each product specified, including details of construction relative to materials, dimensions of individual components, profiles, and finishes.

Shop Drawings showing fabrication and installation of glazed aluminum curtain wall system including plans, elevations, sections, details of components, and attachments to other units of Work.

For installed products indicated to comply with certain design loadings, include structural analysis data signed and sealed by the qualified professional engineer responsible for their preparation.

Samples for initial selection in the form of manufacturer's color charts showing the full range of colors available for components with factory-applied color finishes.

Samples for verification of each type of exposed finish required in manufacturer's standard sizes. Where finishes involve normal color and texture variations, include Sample sets showing the full range of variations expected.

Cutaway Sample of each vertical-to-horizontal intersection of system, made from 12-inch (300-mm) lengths of full-size components and showing details of the following:

Joinery.

Anchorage.

Expansion provisions.

Glazing.

Flashing and drainage.

Welder certificates indicating that welders comply with requirements specified in "Quality Assurance" Article.

Installer certificates signed by manufacturer certifying that installers comply with requirements in "Quality Assurance" Article.

Product test reports from a qualified independent testing agency evidencing compliance of glazed aluminum curtain wall system with requirements based on comprehensive testing of manufacturer's current system.

QUALITY ASSURANCE

Professional Engineer Qualifications: A professional engineer who is legally qualified to practice in the jurisdiction where Project is located and who is experienced in providing engineering services of the kind indicated. Engineering services are defined as those performed for installations of glazed aluminum curtain wall systems that are similar to those indicated for this Project in material, design, and extent.

Installer Qualifications: Engage an experienced installer to assume engineering responsibility and perform work of this Section who has specialized in installing glazed aluminum curtain wall systems similar to those required for this Project and who is acceptable to manufacturer.

Engineering Responsibility: Engage a qualified professional engineer to prepare or supervise the preparation of data for glazed aluminum curtain wall systems, including drawings, testing program development, test-result interpretation, and comprehensive engineering analysis that shows systems' compliance with specified requirements.

Source Limitations: Obtain each type of glazed aluminum curtain wall system from one source and by a single manufacturer.

Product Options: Information on Drawings and in Specifications establishes requirements for system's aesthetic effects and performance characteristics. Aesthetic effects are indicated by dimensions, arrangements, alignment, and profiles of components and assemblies as they relate to sight lines and relationships to one another and to adjoining construction. Performance characteristics are indicated by criteria subject to verification by one or more methods including preconstruction testing, field testing, or in-service performance.

Do not modify intended aesthetic effects, as judged solely by Architect, except with Architect's approval and only to the extent needed to comply with performance requirements. Where modifications are proposed, submit comprehensive explanatory data to Architect for review.

Welding Standards: Comply with applicable provisions of AWS D1.2, "Structural Welding Code--Aluminum."

Engage welders who have satisfactorily passed AWS qualification tests for welding processes involved and who are currently certified for these processes.

Preinstallation Conference: Conduct conference at Project site to comply with requirements of Division 1 Section "Project Meetings."

Preinstallation Conference: Conduct conference at Project site to comply with requirements of the Contract. Review methods and procedures related to glazed aluminum curtain wall system including, but not limited to, the following:

Inspect and discuss condition of substrate and other preparatory work performed by other trades.

Review structural loading limitations.

Review and finalize construction schedule and verify availability of materials, Installer's personnel, equipment, and facilities needed to make progress and avoid delays.

Review required inspecting, testing, and certifying procedures.

Review weather and forecasted weather conditions and procedures for coping with unfavorable conditions.

PROJECT CONDITIONS

Field Measurements: Verify dimensions by field measurements before fabrication and show recorded measurements on Shop Drawings. Coordinate fabrication schedule with construction progress to avoid delaying the Work.

Where field measurements cannot be made without delaying the Work, guarantee dimensions and proceed with fabrication without field measurements. Coordinate construction to ensure that actual dimensions correspond to guaranteed dimensions.

WARRANTY

General Warranty: The special warranty specified in this Article shall not deprive the Owner of other rights the Owner may have under other provisions of the Contract Documents and shall be in addition to, and run concurrent with, other warranties made by the Contractor under requirements of the Contract Documents.

Special Warranty: Submit a written warranty executed by the manufacturer agreeing to repair or replace components of a glazed aluminum curtain wall system that fail in materials or workmanship within the specified warranty period. Failures include, but are not limited to, the following:

Structural failures including, but not limited to, excessive deflection.

Noise or vibration caused by thermal movements.

Failure of system to meet performance requirements.

Deterioration of metals, metal finishes, and other materials beyond normal weathering.

Failure of operating components to function normally.

Water leakage.

Glazing breakage.

Warranty Period: 2 years from date of Substantial Completion.

PART 2 - PRODUCTS

MANUFACTURERS

Available Manufacturers: Subject to compliance with requirements, manufacturers offering products that may be incorporated into the Work include, but are not limited to, the following:

Manufacturers: Subject to compliance with requirements, provide products by one of the following:

EFCO Corporation. Coral Industries
Kawneer Company, Inc.

MATERIALS

Aluminum: Alloy and temper recommended by manufacturer for type of use and finish indicated, complying with the requirements of standards indicated below.

Sheet and Plate: ASTM B 209 (ASTM B 209M).

Extruded Bars, Rods, Shapes, and Tubes: ASTM B 221 (ASTM B 221M).

Extruded Structural Pipe and Tubes: ASTM B 429.

Welding Rods and Bare Electrodes: AWS A5.10.

Steel Reinforcement: ASTM A 36 (ASTM A 36M) for structural shapes, plates, and bars; ASTM A 611 for cold-rolled sheet and strip; or ASTM A 570 (ASTM A 570M) for hot-rolled sheet and strip.

Glazing as specified in Division 8 Section "Glazing."

Glazing Gaskets: Manufacturer's standard sealed-corner pressure-glazing system of black, resilient elastomeric glazing gaskets, setting blocks, and shims or spacers; in hardness recommended by manufacturer.

Glazing sealants and fillers as specified in Division 8 Section "Glazing."

Framing system gaskets and joint fillers as recommended by manufacturer for joint type.

Sealants and joint fillers for joints within glazed aluminum curtain wall system as specified in Division 7 Section "Joint Sealants."

Firesafing materials as specified in Division 7 Section "Building Insulation."

Insulating materials as specified in Division 7 Section "Building Insulation."

Bituminous Spandrel Panels: Cold-applied asphalt mastic paint complying with SSPC-Paint 12 requirements, except containing asbestos, formulated for 30-mil (0.762-mm) thickness per coat.

COMPONENTS

Edge Configuration: Sealed.

Edge Configuration: Vented to the exterior.

Concealed Flashing: Manufacturer's standard corrosion-resistant, nonstaining, nonbleeding flashing, compatible with adjacent materials, and of type recommended by manufacturer.

FABRICATION

General: Fabricate glazed aluminum curtain wall system according to Shop Drawings. Fabricate components that, when assembled, will have accurately fitted joints with ends coped or mitered to produce hairline joints free of burrs and distortion. After fabrication, clearly mark components to identify their locations in Project according to Shop Drawings.

Forming: Form shapes with sharp profiles, straight and free of defects or deformations, before finishing.

Prepare components to receive concealed fasteners and anchor and connection devices.

Fabricate components to drain water passing joints, condensation occurring in glazing channels, condensation occurring within framing members, and moisture migrating within the system to the exterior.

Welding: Weld components to comply with referenced standard and Shop Drawings, unless otherwise indicated. Weld before finishing components. Weld in concealed locations to greatest extent possible to minimize distortion or discoloration of finish. Remove weld spatter and welding oxides from exposed surfaces by descaling or grinding.

Glazing Pockets: Provide minimum clearances for thickness and type of glass indicated according to FGMA's "Glazing Manual."

Metal Protection: Where aluminum will contact dissimilar metals, protect against galvanic action by painting contact surfaces with primer or by applying sealant or tape recommended by manufacturer for this purpose. Where aluminum will contact concrete or masonry, protect against corrosion by painting contact surfaces with bituminous paint.

Frame Units: Factory assemble frame units according to Shop Drawings to greatest extent possible. Rigidly secure nonmovement joints. Seal joints watertight, unless otherwise indicated. Assemble components to drain water passing joints, condensation occurring in glazing channels, condensation occurring within framing members, and moisture migrating within the system to the exterior.

Install glazing according to Shop Drawings. Comply with requirements of Division 8 Section "Glazing," unless otherwise indicated.

ALUMINUM FINISHES

General: Comply with NAAMM's "Metal Finishes Manual for Architectural and Metal Products" for recommendations relative to applying and designating finishes.

Appearance of Finished Work: Variations in appearance of abutting or adjacent pieces are acceptable if they are within one-half of the range of approved Samples. Noticeable variations in the same piece are not acceptable. Variations in appearance of other components are acceptable if they are within the range of approved Samples and are assembled or installed to minimize contrast.

Finish designations prefixed by AA conform to the system established by the Aluminum Association for designating aluminum finishes.

Class I, Color Anodic Finish: AA-M12C22A42/A44 (Mechanical Finish: nonspecular as fabricated; Chemical Finish: etched, medium matte; Anodic Coating: Architectural Class I, integrally colored or electrolytically deposited color coating 0.018 mm or thicker) complying with AAMA 606.1 or AAMA 608.1.

STEEL PRIMING

General: Comply with NAAMM's "Metal Finishes Manual for Architectural and Metal Products" for recommendations relative to applying primer.

Surface Preparation: Perform manufacturer's standard cleaning operations to remove dirt, oil, grease, or other contaminants that could impair paint bond. Remove mill scale and rust, if present, from uncoated steel.

Priming: Apply manufacturer's standard corrosion-resistant primer immediately after surface preparation and pretreatment.

PART 3 - EXECUTION

EXAMINATION

Examine areas, with Installer present, for compliance with requirements for installation tolerances and other conditions affecting performance of glazed aluminum curtain wall system. Do not proceed with installation until unsatisfactory conditions have been corrected or accommodations acceptable to Architect have been made.

INSTALLATION

General: Comply with manufacturer's written instructions for protecting, handling, and installing glazed aluminum curtain wall system. Do not install damaged components. Fit joints to produce hairline joints free of burrs and distortion. Rigidly secure nonmovement joints. Seal joints watertight, unless otherwise indicated. Provide means to drain water to the exterior to produce a permanently weatherproof system.

Metal Protection: Where aluminum will contact dissimilar metals, protect against galvanic action by painting contact surfaces with primer or by applying sealant or tape recommended by manufacturer for this purpose. Where aluminum will contact concrete or masonry, protect against corrosion by painting contact surfaces with bituminous paint.

Install components to drain water passing joints, condensation occurring in glazing channels, condensation occurring within framing members, and moisture migrating within the system to the exterior.

Install framing members plumb and true in alignment with established lines and grades.

Install factory-assembled frame units plumb and true in alignment with established lines and grades.

Install column covers plumb and true in alignment with established lines and grades.

Install operable windows plumb and level, securely anchored, and without distortion. Adjust weather-stripping contact and hardware movement to provide specified performance and proper operation.

Anchorage: After system components are positioned, fix connections to building structure as indicated on Shop Drawings.

Provide separators and isolators to prevent metal corrosion and electrolytic deterioration and to prevent impeding movement of moving joints.

Welding: Weld components to comply with referenced standard and Shop Drawings, unless otherwise indicated. Weld in concealed locations to minimize distortion or discoloration of finish. Protect glazing surfaces from welding.

Install glazing according to Shop Drawings. Comply with requirements of Division 8 Section "Glazing," unless otherwise indicated.

Install sealant according to Shop Drawings. Comply with requirements of Division 7 Section "Joint Sealants," unless otherwise indicated.

Install insulation materials in locations indicated. Comply with requirements of Division 7 Section "Building Insulation," unless otherwise indicated.

Install firesafing in locations indicated. Comply with requirements of Division 7 Section "Building Insulation," unless otherwise indicated.

Erection Tolerances: Install glazed aluminum curtain wall system to comply with the following maximum tolerances:

Plumb: 1/8 inch in 10 feet (3 mm in 3 m); 1/4 inch in 40 feet (6 mm in 12 m).

Level: 1/8 inch in 20 feet (3 mm in 6 m); 1/4 inch in 40 feet (6 mm in 12 m).

Alignment: Where surfaces abut in line, limit offset from true alignment to 1/16 inch (1.5 mm); where a reveal or protruding element separates aligned surfaces by less than 2 inches (50.8 mm), limit offset to 1/2 inch (12.7 mm).

Location: Limit variation from plane or location shown on Shop Drawings to 1/8 inch in 12 feet (3 mm in 3.7 m); 1/2 inch (12.7 mm) over total length.

PROTECTION

Provide final protection and maintain conditions, in a manner acceptable to manufacturer and Installer, that ensure glazed aluminum curtain wall system is without damage or deterioration at the time of Substantial Completion.

END OF SECTION 08920

SECTION 09255 - GYPSUM BOARD ASSEMBLIES

PART 1 - GENERAL

RELATED DOCUMENTS

Drawings and general provisions of the Contract, including General and Supplementary Conditions and Division 1 Specification Sections, apply to this Section.

SUMMARY

This Section includes the following:

Nonload-bearing steel framing members for gypsum board assemblies.

Gypsum board assemblies attached to steel framing.

Cementitious backer units installed with gypsum board assemblies for ceramic tile installation.

Access doors for ceiling

Related Sections: The following Sections contain requirements that relate to this Section:

Division 5 Section "Cold-Formed Metal Framing" for load-bearing steel framing and/or metal stud partition framing.

Division 6 Section "Rough Carpentry" for wood blocking and furring, and gypsum sheathing applied over wood framing.

Division 9 Section "Tile" for cementitious backer units installed as substrates for ceramic tile.

DEFINITIONS

Gypsum Board Construction Terminology: Refer to ASTM C 11 and GA-505 for definitions of terms for gypsum board assemblies not defined in this Section or in other referenced standards.

ASSEMBLY PERFORMANCE REQUIREMENTS

Sound Transmission Characteristics: For gypsum board assemblies with STC ratings, provide materials and construction identical to those of assemblies whose STC ratings were determined according to ASTM E 90 and classified according to ASTM E 413 by a qualified independent testing agency.

Fire Resistance: Provide gypsum board assemblies with fire-resistance ratings indicated.

SUBMITTALS

Product Data from manufacturer for each type of product specified.

QUALITY ASSURANCE

Single-Source Responsibility for Panel Products: Obtain each type of gypsum board and other panel products from a single manufacturer.

Single-Source Responsibility for Finishing Materials: Obtain finishing materials from either the same manufacturer that supplies gypsum board and other panel products or from a manufacturer acceptable to gypsum board manufacturer.

Fire-Test-Response Characteristics: Where fire-resistance-rated gypsum board assemblies are indicated, provide gypsum board assemblies that comply with the following requirements:

Fire-Resistance Ratings: As indicated by GA File Numbers in GA-600 "Fire Resistance Design Manual" or design designations in UL "Fire Resistance Directory" or in the listing of another testing and inspecting agency acceptable to authorities having jurisdiction.

Gypsum board assemblies indicated are identical to assemblies tested for fire resistance according to ASTM E 119 by an independent testing and inspecting agency acceptable to authorities having jurisdiction.

Deflection and Firestop Track: Top runner provided in fire-resistance-rated assemblies indicated is labeled and listed by UL, Warnock Hersey, or another testing and inspecting agency acceptable to authorities having jurisdiction.

DELIVERY, STORAGE, AND HANDLING

Deliver materials in original packages, containers, or bundles bearing brand name and identification of manufacturer or supplier.

Store materials inside under cover and keep them dry and protected against damage from weather, direct sunlight, surface contamination, corrosion, construction traffic, and other causes. Neatly stack gypsum panels flat to prevent sagging.

PROJECT CONDITIONS

Environmental Conditions, General: Establish and maintain environmental conditions for applying and finishing gypsum board to comply with ASTM C 840 requirements or gypsum board manufacturer's recommendations, whichever are more stringent.

Room Temperatures: For nonadhesive attachment of gypsum board to framing, maintain not less than 40 deg F (4 deg C). For adhesive attachment and finishing of gypsum board, maintain not less than 50 deg F (10 deg C) for 48 hours before application and continuously after until dry. Do not exceed 95 deg F (35 deg C) when using temporary heat sources.

Ventilation: Ventilate building spaces as required to dry joint treatment materials. Avoid drafts during hot, dry weather to prevent finishing materials from drying too rapidly.

PART 2 - PRODUCTS

MANUFACTURERS

Available Manufacturers: Subject to compliance with requirements, manufacturers offering products that may be incorporated in the Work include, but are not limited to, the following:

Manufacturers: Subject to compliance with requirements, provide products by one of the following:

Grid Suspension Assemblies:

Armstrong World Industries, Inc.
Chicago Metallic Corp.
USG Interiors, Inc.
Worthington Steel Company (formerly National Rolling Mills).

Gypsum Board and Related Products:

Domtar Gypsum.
Georgia-Pacific Corp.
National Gypsum Co.; Gold Bond Building Products Division.
United States Gypsum Co.

Available Products: Subject to compliance with requirements, products that may be incorporated in the Work where proprietary gypsum wallboard is indicated include, but are not limited to, the following:

Products: Subject to compliance with requirements, provide one of the following products where proprietary gypsum wallboard is indicated:

DenShield Tile Backer; Pacific Corp.
Gyprock Fireguard C Gypsum Board; Domtar Gypsum.
Firestop Type C; Georgia-Pacific Corp.
Fire-Shield G; National Gypsum Co.; Gold Bond Building Products Division.
SHEETROCK Brand Gypsum Panels, FIRECODE C Core; United States Gypsum Co.
SHEETROCK Brand Gypsum Panels, ULTRACODE Core; United States Gypsum Co.

STEEL FRAMING COMPONENTS FOR SUSPENDED AND FURRED CEILINGS

General: Provide components complying with ASTM C 754 for conditions indicated.

Powder-Actuated Fasteners in Concrete: Fastener system of type suitable for application indicated, fabricated from corrosion-resistant materials, with clips or other accessory devices for attaching hangers of type indicated, and with capability to sustain, without failure, a load equal to 10 times that imposed by ceiling construction, as determined by testing according to ASTM E 1190 conducted by a qualified independent testing agency.

Wire Ties: ASTM A 641 (ASTM A 641M), Class 1 zinc coating, soft temper, 0.062 inch (1.6 mm) thick.

Wire Hangers: ASTM A 641 (ASTM A 641M), Class 1 zinc coating, soft temper, 0.162-inch (4.1-mm) diameter.

Hanger Rods: Mild steel and zinc coated or protected with rust-inhibitive paint.

Flat Hangers: Mild steel and zinc coated or protected with rust-inhibitive paint.

Angle-Type Hangers: Angles with legs not less than 7/8 inch (22.2 mm) wide, formed from 0.0635-inch- (1.6-mm-) thick galvanized steel sheet complying with ASTM A 653, G 90 (ASTM A 653M, Z 180) coating designation, with bolted connections and 5/16-inch (8-mm) diameter bolts.

Channels: Cold-rolled steel, 0.0598-inch (1.5-mm) minimum thickness of base (uncoated) metal and 7/16-inch- (11.1-mm-) wide flanges, and as follows:

Carrying Channels: 2 inches (50.8 mm) deep, 590 lb/1000 feet (88 kg/100 m), unless otherwise indicated.

Carrying Channels: 1-1/2 inches (38.1 mm) deep, 475 lb/1000 feet (70 kg/100 m), unless otherwise indicated.

Furring Channels: 3/4 inch (19.1 mm) deep, 300 lb/1000 feet (45 kg/100 m), unless otherwise indicated.

Finish: ASTM A 653, G 60 (ASTM A 653M, Z 180) hot-dip galvanized coating for framing for exterior soffits and where indicated.

Steel Resilient Furring Channels: Manufacturer's standard product designed to reduce sound transmission, fabricated from steel sheet complying with ASTM A 653 (ASTM A 653M) or ASTM A 568 (ASTM A 568M) to form 1/2-inch- (12.7-mm-) deep channel of the following configuration:

Single- or Double-Leg Configuration: Asymmetric-shaped channel with face connected to a single flange by a single-slotted leg (web) or hat-shaped channel, with 1-1/2-inch- (38.1-mm-) wide face connected to flanges by double-slotted or expanded-metal legs (webs).

Grid Suspension System for Interior Ceilings: ASTM C 645, manufacturer's standard direct-hung grid suspension system composed of main beams and cross-furring members that interlock to form a modular supporting network.

In locations to receive cementitious backer units.

Where indicated.

GYPSUM BOARD PRODUCTS

General: Provide gypsum board of types indicated in maximum lengths available that will minimize end-to-end butt joints in each area indicated to receive gypsum board application.

Widths: Provide gypsum board in widths of 48 inches (1219 mm).

Gypsum Wallboard: ASTM C 36 and as follows:

Type: Regular for vertical surfaces, unless otherwise indicated.

Type: Sag-resistant type for ceiling surfaces.

Type: Proprietary type as required for specific fire-resistance-rated assemblies.

Edges: Tapered.

Thickness: 1/2 inch (12.7 mm), for ceilings..

Thickness: 5/8 inch (15.9 mm) for walls.

Water-Resistant Backing Board with water resistant coating: ASTM C 1178 and as follows:

Type: Regular, unless otherwise indicated.

Thickness: 1/2 inch (15.9 mm)

Gypsum Sheathing Board: ASTM C 79:

Type: Exterior, regular, unless otherwise indicated.

Thickness: 5/8 inch (15.9 mm)

TRIM ACCESSORIES

Accessories for Interior Installation: Cornerbead, edge trim, and control joints complying with ASTM C 1047 and requirements indicated below:

Material: Formed metal or plastic, with metal complying with the following requirement: Steel sheet zinc coated by hot-dip or electrolytic process, or steel sheet coated with aluminum or rolled zinc.

Shapes indicated below by reference to Fig. 1 designations in ASTM C 1047:

Cornerbead on outside corners, unless otherwise indicated.

LC-bead with both face and back flanges; face flange formed to receive joint compound. Use LC-beads for edge trim, unless otherwise indicated.

L-bead with face flange only; face flange formed to receive joint compound. Use L-bead where indicated.

U-bead with face and back flanges; face flange formed to be left without application of joint compound. Use U-bead where indicated.

One-piece control joint formed with V-shaped slot and removable strip covering slot opening.

JOINT TREATMENT MATERIALS

General: Provide joint treatment materials complying with ASTM C 475 and the recommendations of both the manufacturers of sheet products and of joint treatment materials for each application indicated.

Joint Tape for Gypsum Board: Paper reinforcing tape, unless otherwise indicated.

Use pressure-sensitive or staple-attached, open-weave, glass-fiber reinforcing tape with compatible joint compound where recommended by manufacturer of gypsum board and joint treatment materials for application indicated.

Joint Tape for Cementitious Backer Units: As recommended by cementitious backer unit manufacturer.

Drying-Type Joint Compounds for Gypsum Board: Factory-packaged vinyl-based products complying with the following requirements for formulation and intended use.

Ready-Mixed Formulation: Factory-mixed product.

Taping compound formulated for embedding tape and for first coat over fasteners and face flanges of trim accessories.

Topping compound formulated for fill (second) and finish (third) coats.

All-purpose compound formulated for both taping and topping compounds.

Joint Compound for Cementitious Backer Units: Material recommended by cementitious backer unit manufacturer.

ACOUSTICAL SEALANT

Acoustical Sealant for Exposed and Concealed Joints: Manufacturer's standard nonsag, paintable, nonstaining latex sealant complying with ASTM C 834 and the following requirements:

Product is effective in reducing airborne sound transmission through perimeter joints and openings in building construction as demonstrated by testing representative assemblies according to ASTM E 90.

Available Products: Subject to compliance with requirements, acoustical sealants that may be

incorporated in the Work include, but are not limited to, the following:

Products: Subject to compliance with requirements, provide one of the following:

Acoustical Sealant for Exposed and Concealed Joints:

PL Acoustical Sealant; ChemRex, Inc.; Contech Brands.
AC-20 FTR Acoustical and Insulation Sealant; Pecora Corp.
SHEETROCK Acoustical Sealant; United States Gypsum Co.

MISCELLANEOUS MATERIALS

General: Provide auxiliary materials for gypsum board construction that comply with referenced standards and recommendations of gypsum board manufacturer.

Spot Grout: ASTM C 475, setting-type joint compound recommended for spot-grouting hollow metal door frames.

Steel drill screws complying with ASTM C 1002 for the following applications:

Fastening gypsum board to steel members less than 0.033 inch (0.84 mm) thick.

Fastening gypsum board to wood members.

Fastening gypsum board to gypsum board.

Steel drill screws complying with ASTM C 954 for fastening gypsum board to steel members from 0.033 to 0.112 inch (0.84 to 2.84 mm) thick.

Steel drill screws of size and type recommended by unit manufacturer for fastening cementitious backer units.

Sound-Attenuation Blankets: Unfaced mineral-fiber blanket insulation produced by combining mineral fibers of type described below with thermosetting resins to comply with ASTM C 665 for Type I (blankets without membrane facing).

Mineral-Fiber Type: Fibers manufactured from glass, slag wool, or rock wool.

Extruded-Polystyrene Board Insulation: Rigid, cellular, polystyrene thermal insulation formed from a polystyrene base resin by an extrusion process using hydrochlorofluorocarbons as the blowing agent to comply with ASTM C 578 for Type IV, and with the following surface-burning characteristics:

Flame-spread and smoke-developed ratings of 75 and 450, respectively, according to ASTM E 84.

TEXTURE FINISH PRODUCTS

Primer: Of type recommended by texture finish manufacturer.

Aggregated Finish for Ceilings: Factory-packaged proprietary drying type powder product formulated with aggregates for mixing with water at Project site to produce texture indicated below by spray application.

Sand textured finish.

Aggregate Finish for Walls: Factory-packaged proprietary drying-type powder product formulated with aggregate for mixing with water at Project site for spray application to produce texture indicated below:

Sand textured finish.

Available Products: Subject to compliance with requirements, texture finishes that may be incorporated in the Work include, but are not limited to, the following:

Products: Subject to compliance with requirements, provide one of the following products:

ACCESS PANEL: As indicated on drawings.

Equal to NYSTRO 24 x 24 standard steel door.

Door	14 ga. cold rolled steel
Frame	16 ga. cold rolled steel
Hinge	consealed spring pin hinge
Latch	screwdriver can latch
Finish	phosphate dipped and prime coatedpainted to match ceiling

PART 3 - EXECUTION

EXAMINATION

Examine substrates to which gypsum board assemblies attach or abut, installed hollow metal frames, cast-in-anchors, and structural framing, with Installer present, for compliance with requirements for installation tolerances and other conditions affecting performance of assemblies specified in this Section. Do not proceed with installation until unsatisfactory conditions have been corrected.

PREPARATION

Ceiling Anchorages: Coordinate installation of ceiling suspension systems with installation of overhead structural assemblies to ensure that inserts and other provisions for anchorages to building structure have been installed to receive ceiling hangers that will develop their full strength and at spacing required to support ceilings.

Furnish concrete inserts and other devices indicated to other trades for installation well in advance of time needed for coordination with other construction.

Existing sprayed-on fireproofing remove only as much fireproofing as needed to complete installation of gypsum board assemblies without reducing thickness of fireproofing below that is

required to obtain fire-resistance rating indicated. Protect remaining fireproofing from damage.

INSTALLING STEEL FRAMING FOR SUSPENDED AND FURRED CEILINGS

Screw furring members to wood framing.

Suspend ceiling hangers from building structural members and as follows:

Install hangers plumb and free from contact with insulation or other objects within ceiling plenum that are not part of supporting structural or ceiling suspension system. Splay hangers only where required to miss obstructions and offset resulting horizontal forces by bracing, countersplaying, or other equally effective means.

Where width of ducts and other construction within ceiling plenum produces hanger spacings that interfere with the location of hangers required to support standard suspension system members, install supplemental suspension members and hangers in form of trapezes or equivalent devices. Size supplemental suspension members and hangers to support ceiling loads within performance limits established by referenced standards.

Secure wire hangers by looping and wire-tying, either directly to structures or to inserts, eyescrews, or other devices and fasteners that are secure and appropriate for substrate, and in a manner that will not cause them to deteriorate or otherwise fail.

Secure flat, angle, and rod hangers to structure, including intermediate framing members, by attaching to inserts, eyescrews, or other devices and fasteners that are secure and appropriate for structure as well as for type of hanger involved, and in a manner that will not cause them to deteriorate or otherwise fail.

Do not support ceilings directly from permanent metal forms. Furnish cast-in-place hanger inserts that extend through forms.

Do not attach hangers to steel deck tabs.

Do not attach hangers to steel roof deck. Attach hangers to structural members.

Do not connect or suspend steel framing from ducts, pipes, or conduit.

Sway-brace suspended steel framing with hangers used for support.

Install suspended steel framing components in sizes and at spacings indicated, but not less than that required by the referenced steel framing installation standard.

Wire Hangers: 48 inches (1219 mm) o.c.

Carrying Channels (Main Runners): 48 inches (1219 mm) o.c.

Furring Channels (Furring Members): 24 inches (610 mm) o.c.

Installation Tolerances: Install steel framing components for suspended ceilings so that cross-furring or grid suspension members are level to within 1/8 inch in 12 feet (3 mm in 3.6 m) as measured both lengthwise on each member and transversely between parallel members.

Wire-tie or clip furring members to main runners and to other structural supports as indicated.

Grid Suspension System: Attach perimeter wall track or angle where grid suspension system meets vertical surfaces. Mechanically join main beam and cross-furring members to each other and butt-cut to fit into wall track.

Install thermal insulation as follows:

Erect insulation vertically and hold in place with Z-furring members spaced 24 inches (610 mm) o.c.

Erect insulation vertically and hold in place with Z-furring members spaced 600 mm o.c.

Except at exterior corners, securely attach narrow flanges of furring members to wall with concrete stub nails, screws designed for masonry attachment, or powder-driven fasteners spaced 24 inches (600 mm) o.c.

At exterior corners, attach wide flange of furring members to wall with short flange extending beyond corner; on adjacent wall surface, screw attach short flange of furring channel to web of attached channel. Start from this furring channel with standard width insulation panel and continue in regular manner. At interior corners, space second member no more than 12 inches (300 mm) from corner and cut insulation to fit.

Until gypsum board is installed, hold insulation in place with 10-inch (250-mm) staples fabricated from 0.0625-inch (1.6-mm) diameter tie wire and inserted through slot in web of member.

APPLYING AND FINISHING GYPSUM BOARD, GENERAL

Gypsum Board Application and Finishing Standards: Install and finish gypsum panels to comply with ASTM C 840 and GA-216.

Install sound-attenuation blankets, where indicated, prior to installing gypsum panels unless blankets are readily installed after panels have been installed on one side.

Install ceiling board panels across framing to minimize the number of abutting end joints and to avoid abutting end joints in the central area of each ceiling. Stagger abutting end joints of adjacent panels not less than one framing member.

Install gypsum panels with face side out. Do not install imperfect, damaged, or damp panels. Butt panels together for a light contact at edges and ends with not more than 1/16 inch (1.5 mm) of open space between panels. Do not force into place.

Locate both edge or end joints over supports, except in ceiling applications where intermediate supports or gypsum board back-blocking is provided behind end joints. Do not place tapered

edges against cut edges or ends. Stagger vertical joints on opposite sides of partitions. Avoid joints other than control joints at corners of framed openings where possible.

Attach gypsum panels to steel studs so leading edge or end of each panel is attached to open (unsupported) edges of stud flanges first.

Attach gypsum panels to framing provided at openings and cutouts.

Do not attach gypsum panels across the flat grain of wide-dimension lumber, including floor joists and headers. Instead, float gypsum panels over these members using resilient channels or provide control joints to counteract wood shrinkage.

Spot grout hollow metal door frames for solid-core wood doors, hollow metal doors, and doors over 32 inches (813 mm) wide. Apply spot grout at each jamb anchor clip and immediately insert gypsum panels into frames.

Form control and expansion joints at locations indicated and as detailed, with space between edges of adjoining gypsum panels, as well as supporting framing behind gypsum panels.

Cover both faces of steel stud partition framing with gypsum panels in concealed spaces (above ceilings, etc.), except in chases that are braced internally.

Except where concealed application is indicated or required for sound, fire, air, or smoke ratings, coverage may be accomplished with scraps of not less than 8 sq. ft. (0.7 sq. m) in area.

Fit gypsum panels around ducts, pipes, and conduits.

Where partitions intersect open concrete coffers, concrete joists, and other structural members projecting below underside of floor/roof slabs and decks, cut gypsum panels to fit profile formed by coffers, joists, and other structural members; allow 1/4- to 3/8-inch- (6.4- to 9.5-mm-) wide joints to install sealant.

Isolate perimeter of nonload-bearing gypsum board partitions at structural abutments, except floors, as detailed. Provide 1/4- to 1/2-inch- (6.4- to 12.7-mm-) wide spaces at these locations and trim edges with U-bead edge trim where edges of gypsum panels are exposed. Seal joints between edges and abutting structural surfaces with acoustical sealant.

Floating Construction: Where feasible, including where recommended by manufacturer, install gypsum panels over wood framing, with floating internal corner construction.

Where STC-rated gypsum board assemblies are indicated, seal construction at perimeters, behind control and expansion joints, openings, and penetrations with a continuous bead of acoustical sealant including a bead at both faces of the partitions. Comply with ASTM C 919 and manufacturer's recommendations for location of edge trim and closing off sound-flanking paths around or through gypsum board assemblies, including sealing partitions above acoustical ceilings.

Space fasteners in gypsum panels according to referenced gypsum board application and finishing standard and manufacturer's recommendations.

Space screws a maximum of 12 inches (304.8 mm) o.c. for vertical applications.

Space fasteners in panels that are tile substrates a maximum of 8 inches (203.2 mm) o.c.

GYPSUM BOARD APPLICATION METHODS

Single-Layer Application: Install gypsum wallboard panels as follows:

On ceilings, apply gypsum panels prior to wall/partition board application to the greatest extent possible and at right angles to framing, unless otherwise indicated.

On partitions/walls, apply gypsum panels vertically (parallel to framing), unless otherwise indicated, and provide panel lengths that will minimize end joints.

Stagger abutting end joints not less than one framing member in alternate courses of board.

Wall Tile Substrates: For substrates indicated to receive thin-set ceramic tile and similar rigid applied wall finishes, comply with the following:

Install cementitious backer units to comply with ANSI A108.11 at locations indicated to receive wall tile.

Single-Layer Fastening Methods: Apply gypsum panels to supports as follows:

Fasten with screws.

INSTALLING TRIM ACCESSORIES

General: For trim accessories with back flanges, fasten to framing with the same fasteners used to fasten gypsum board. Otherwise, fasten trim accessories according to accessory manufacturer's directions for type, length, and spacing of fasteners.

Install cornerbead at external corners.

Install edge trim where edge of gypsum panels would otherwise be exposed. Provide edge trim type with face flange formed to receive joint compound, except where other types are indicated.

Install LC-bead where gypsum panels are tightly abutted to other construction and back flange can be attached to framing or supporting substrate.

Install L-bead where edge trim can only be installed after gypsum panels are installed.

Install U-bead where indicated.

Install aluminum trim and other accessories where indicated.

Install control joints according to ASTM C 840 and manufacturer's recommendations and in specific locations approved by Architect for visual effect.

FINISHING GYPSUM BOARD ASSEMBLIES

General: Treat gypsum board joints, interior angles, flanges of cornerbead, edge trim, control joints, penetrations, fastener heads, surface defects, and elsewhere as required to prepare gypsum board surfaces for decoration.

Prefill open joints, rounded or beveled edges, and damaged areas using setting-type joint compound.

Apply joint tape over gypsum board joints and to flanges of trim accessories as recommended by trim accessory manufacturer.

Levels of Gypsum Board Finish: Provide the following levels of gypsum board finish per GA-214.

Level 4 for gypsum board surfaces, unless otherwise indicated.

For Level 4 gypsum board finish, embed tape in joint compound and apply first, fill (second), and finish (third) coats of joint compound over joints, angles, fastener heads, and accessories. Touch up and sand between coats and after last coat as needed to produce a surface free of visual defects and ready for decoration.

APPLYING TEXTURE FINISHES

Surface Preparation and Primer: Prepare and apply primer to gypsum panels and other surfaces receiving texture finishes according to texture finish manufacturer's instructions. Apply primer only to surfaces that are clean, dry, and smooth.

Texture Finish Application: Mix and apply finish to gypsum panels and other surfaces indicated to receive texture finish according to texture finish manufacturer's directions. Using powered spray equipment, produce a uniform texture matching approved mockup and free of starved spots or other evidence of thin application or of application patterns.

Prevent texture finishes from coming into contact with surfaces not indicated to receive texture finish by covering them with masking agents, polyethylene film, or other means. If, despite these precautions, texture finishes contact these surfaces, immediately remove droppings and overspray as recommended by texture finish manufacturer to prevent damage.

FIELD QUALITY CONTROL

Above-Ceiling Observation: Architect will conduct an above-ceiling observation prior to installation of gypsum board ceilings and report any deficiencies in the Work observed. Do not proceed with installation of gypsum board to ceiling support framing until deficiencies have been corrected.

Notify Architect one week in advance of the date and the time when the Project, or part of the Project, will be ready for an above-ceiling observation.

Prior to notifying Architect, complete the following in areas to receive gypsum board ceilings:

Installation of 80 percent of lighting fixtures, powered for operation.

Installation, insulation, and leak and pressure testing of water piping systems.

Installation of air duct systems.

Installation of air devices.

Installation of mechanical system control air tubing.

Installation of ceiling support framing.

CLEANING AND PROTECTION

Promptly remove any residual joint compound from adjacent surfaces.

Provide final protection and maintain conditions, in a manner acceptable to Installer, that ensure gypsum board assemblies are without damage or deterioration at the time of Substantial Completion.

END OF SECTION 09255

SECTION 09512 - ACOUSTICAL TILE CEILINGS

PART 1 - GENERAL

RELATED DOCUMENTS

Drawings and general provisions of the Contract, including General and Supplementary Conditions and Division 1 Specification Sections, apply to this Section.

SUMMARY

This Section includes the following:

Ceilings consisting of acoustical tiles and concealed suspension systems.

Related Sections include the following:

Division 9 "Gypsum Board Assemblies."

SUBMITTALS

Product Data: For each type of product specified.

Coordination Drawings: Reflected ceiling plans drawn to scale and coordinating penetrations and ceiling-mounted items. Show the following:

Ceiling suspension system members.

Method of attaching suspension system hangers to building structure.

Initial direct-access openings.

Ceiling-mounted items including light fixtures; air outlets and inlets; speakers; sprinklers; and special moldings at walls, column penetrations, and other junctures of acoustical ceilings with adjoining construction.

Minimum Drawing Scale: 1/4 inch = 1 foot (1:48).

Samples for Initial Selection: Manufacturer's color charts consisting of actual acoustical tiles or sections of acoustical tiles, suspension systems, and moldings showing the full range of colors, textures, and patterns available for each type of ceiling assembly indicated.

Samples for Verification: Full-size units of each type of ceiling assembly indicated; in sets for each color, texture, and pattern specified, showing the full range of variations expected in these characteristics.

Full-size samples of each acoustical tile type, pattern, and color.

Set of 12-inch- (300-mm-) long samples of concealed suspension system members.

Set of 12-inch- (300-mm-) long samples of exposed moldings for each color and system type required.

Qualification Data: For firms and persons specified in "Quality Assurance" Article to demonstrate their capabilities and experience. Include lists of completed projects with project names and addresses, names and addresses of architects and owners, and other information specified.

Product Test Reports: Indicate compliance of acoustical tile ceilings and components with requirements based on comprehensive testing of current products.

Research/Evaluation Reports: Evidence of acoustical tile ceiling's and components' compliance with building code in effect for Project, from a model code organization acceptable to authorities having jurisdiction.

QUALITY ASSURANCE

Installer Qualifications: Engage an experienced installer who has completed acoustical tile ceilings similar in material, design, and extent to that indicated for this Project and with a record of successful in-service performance.

Source Limitations for Ceiling Units: Obtain each acoustical ceiling tile from one source with resources to provide products of consistent quality in appearance and physical properties without delaying the Work.

Source Limitations for Suspension System: Obtain each suspension system from one source with resources to provide products of consistent quality in appearance and physical properties without delaying the Work.

Obtain both acoustical ceiling tiles and suspension system from the same manufacturer.

Preinstallation Conference: Conduct conference at Project site to comply with requirements of Division 1 Section "Project Meetings."

DELIVERY, STORAGE, AND HANDLING

Deliver acoustical tiles and suspension system components to Project site in original, unopened packages and store them in a fully enclosed space where they will be protected against damage from moisture, direct sunlight, surface contamination, and other causes.

Before installing acoustical tiles, permit them to reach room temperature and a stabilized moisture content.

Handle acoustical tiles carefully to avoid chipping edges or damaging units in any way.

PROJECT CONDITIONS

Environmental Limitations: Do not install acoustical tile ceilings until spaces are enclosed and weatherproof, wet-work in spaces is complete and dry, work above ceilings is complete, and ambient temperature and humidity conditions are maintained at the levels indicated for Project when occupied for its intended use.

COORDINATION

Coordinate layout and installation of acoustical tiles and suspension system with other construction that penetrates ceilings or is supported by them, including light fixtures, HVAC equipment, fire-suppression system, and partition assemblies.

EXTRA MATERIALS

Furnish extra materials described below that match products installed, are packaged with protective covering for storage, and are identified with labels describing contents.

Acoustical Ceiling Units: Full-size units equal to 2.0 percent of amount installed.

Suspension System Components: Quantity of each grid and exposed component equal to 2.0 percent of amount installed.

PART 2 - PRODUCTS

MANUFACTURERS

Available Products: Subject to compliance with requirements, products that may be incorporated into the Work include, but are not limited to, those indicated for each designation in the Acoustical Tile Ceiling Schedule at the end of Part 3.

ACOUSTICAL TILES, GENERAL

Acoustical Tile Standard: Provide manufacturer's standard tiles of configuration indicated that comply with ASTM E 1264 classifications as designated by types, patterns, acoustical ratings, and light reflectances, unless otherwise indicated.

Mounting Method for Measuring Noise Reduction Coefficient: Type E-400; plenum mounting in which face of test specimen is 15-3/4 inches (400 mm) away from test surface per ASTM E 795.

Acoustical Tile Colors and Patterns: Match appearance characteristics indicated for each product type.

Where appearance characteristics of acoustical tiles are indicated by referencing ASTM E 1264 pattern designations and not manufacturers' proprietary product designations, provide products selected by Architect from each manufacturer's full range of products that comply with requirements indicated for type, pattern, color, light reflectance, acoustical performance, edge detail, and size.

Tile Characteristics: Comply with requirements indicated in the Acoustical Tile Ceiling Schedule at the end of Part 3, including those referencing ASTM E 1264 classifications.

METAL SUSPENSION SYSTEMS, GENERAL

Metal Suspension System Standard: Provide manufacturer's standard metal suspension systems of types, structural classifications, and finishes indicated that comply with applicable ASTM C 635 requirements.

Metal Suspension System Characteristics: Comply with requirements indicated in the Acoustical Panel Ceiling Schedule at the end of Part 3.

Finishes and Colors, General: Comply with NAAMM's "Metal Finishes Manual for Architectural and Metal Products" for recommendations for applying and designating finishes. Provide manufacturer's standard factory-applied finish for type of system indicated.

High-Humidity Finish: Comply with ASTM C 635 requirements for "Coating Classification for Severe Environment Performance" where high-humidity finishes are indicated.

Attachment Devices: Size for five times design load indicated in ASTM C 635, Table 1, Direct Hung, unless otherwise indicated.

Postinstalled Powder-Actuated Fasteners in Concrete: Fastener system of type suitable for application indicated, fabricated from corrosion-resistant materials, with clips or other accessory devices for attaching hangers of type indicated, and with capability to sustain, without failure, a load equal to 10 times that imposed by ceiling construction, as determined by testing per ASTM E 1190, conducted by a qualified testing and inspecting agency.

Wire Hangers, Braces, and Ties: Provide wires complying with the following requirements:

Zinc-Coated Carbon-Steel Wire: ASTM A 641/A 641M, Class 1 zinc coating, soft temper.

Size: Select wire diameter so its stress at three times hanger design load (ASTM C 635, Table 1, Direct Hung) will be less than yield stress of wire, but provide not less than 0.106-inch- (2.69-mm-) diameter wire.

Hanger Rods: Mild steel, zinc coated or protected with rust-inhibitive paint.

Flat Hangers: Mild steel, zinc coated or protected with rust-inhibitive paint.

Angle Hangers: Angles with legs not less than 7/8 inch (22 mm) wide; formed with 0.04-inch- (1-mm-) thick, galvanized steel sheet complying with ASTM A 653/A 653M, G90 (Z275) coating designation; with bolted connections and 5/16-inch- (8-mm-) diameter bolts.

Sheet-Metal Edge Moldings and Trim: Type and profile indicated or, if not indicated, manufacturer's standard moldings for edges and penetrations that fit acoustical tile edge details and suspension systems indicated; formed from sheet metal of same material and finish as that used for exposed flanges of suspension system runners.

For circular penetrations of ceiling, provide edge moldings fabricated to diameter required to fit penetration exactly.

Extruded-Aluminum Edge Moldings and Trim: Where indicated, provide manufacturer's extruded-aluminum edge moldings and trim of profile indicated or referenced by manufacturer's product designations, including splice plates, corner pieces, and attachment and other clips, complying with the following requirements:

Aluminum Alloy: Alloy and temper recommended by aluminum producer and finisher for type of use and finish indicated, and with not less than the strength and durability properties of aluminum extrusions complying with ASTM B 221/B 221M for alloy and temper 6063-T5.

Finish designations prefixed by AA comply with system established by the Aluminum Association for designating aluminum finishes.

Baked-Enamel Finish: AA-C12C42R1x (Chemical Finish: cleaned with inhibited chemicals; Chemical Finish: acid-chromate-fluoride-phosphate conversion coating; Organic Coating: as specified below). Comply with paint manufacturer's written instructions for applying and baking and for minimum dry film thickness.

Organic Coating: Manufacturer's standard thermosetting coating system with a minimum dry film thickness of 0.8 to 1.2 mils (0.02 to 0.03 mm).

Color: As selected by Architect from manufacturer's standard colors.

Available Manufacturers: Subject to compliance with requirements, manufacturers offering products that may be incorporated into the Work include, but are not limited to, the following:

Armstrong World Industries, Inc.
Celotex Corporation (The); Building Products Division; Architectural Ceilings Marketing Dept.
Chicago Metallic Corporation.
Fry Reglet Corporation.
Certain Teed Corporation

PART 3 - EXECUTION

EXAMINATION

Examine substrates and structural framing to which acoustical tile ceilings attach or abut, with Installer present, for compliance with requirements specified in this and other Sections that affect ceiling installation and anchorage, and other conditions affecting performance of acoustical tile ceilings.

Proceed with installation only after unsatisfactory conditions have been corrected.

PREPARATION

Coordination: Furnish layouts for preset inserts, clips, and other ceiling anchors whose installation is specified in other Sections.

Furnish concrete inserts and similar devices to other trades for installation well in advance of time needed for coordinating other work.

Testing Substrates: Before installing adhesively applied tiles on wet-placed substrates such as cast-in-place concrete or plaster, test and verify that moisture level is below tile manufacturer's recommended limits.

Measure each ceiling area and establish layout of acoustical tiles to balance border widths at opposite edges of each ceiling. Avoid using less-than-half-width units at borders, and comply with layout shown on reflected ceiling plans.

INSTALLATION

General: Install acoustical tile ceilings to comply with publications referenced below per manufacturer's written instructions and CISCA's "Ceiling Systems Handbook."

Standard for Ceiling Suspension System Installations: Comply with ASTM C 636.

Standard for Ceiling Suspension Systems Requiring Seismic Restraint: Comply with ASTM E 580.

CISCA's Recommendations for Acoustical Ceilings: Comply with CISCA's "Recommendations for Direct-Hung Acoustical Tile and Lay-in Panel Ceilings--Seismic Zones 0-2."

CISCA's Guidelines for Systems Requiring Seismic Restraint: Comply with CISCA's "Guidelines for Seismic Restraint of Direct-Hung Suspended Ceiling Assemblies--Seismic Zones 3 & 4."

U.B.C.'s "Metal Suspension Systems for Acoustical Tile and for Lay-in Panel Ceilings": U.B.C. Standard 25-2.

Suspend ceiling hangers from building's structural members and as follows:

Install hangers plumb and free from contact with insulation or other objects within ceiling plenum that are not part of supporting structure or of ceiling suspension system.

Splay hangers only where required to miss obstructions; offset resulting horizontal forces by bracing, countersplaying, or other equally effective means.

Splay hangers only where required and, if permitted with fire-resistance-rated ceilings, to miss obstructions; offset resulting horizontal forces by bracing, countersplaying, or other equally effective means.

Where width of ducts and other construction within ceiling plenum produces hanger spacings that interfere with location of hangers at spacings required to support standard suspension system members, install supplemental suspension members and hangers in form of trapezes or equivalent devices. Size supplemental suspension members and hangers to support ceiling loads within performance limits established by referenced standards and publications.

Secure wire hangers to ceiling suspension members and to supports above with a minimum of three tight turns. Connect hangers directly either to structures or to inserts, eye screws, or other devices that are secure; that are appropriate for substrate; and that will not deteriorate or otherwise fail due to age, corrosion, or elevated temperatures.

Secure flat, angle, channel, and rod hangers to structure, including intermediate framing members, by attaching to inserts, eye screws, or other devices that are secure and appropriate for both structure to which hangers are attached and type of hanger involved. Install hangers in a manner that will not cause them to deteriorate or fail due to age, corrosion, or elevated temperatures.

Do not support ceilings directly from permanent metal forms or floor deck. Fasten hangers to cast-in-place hanger inserts, powder-actuated fasteners, or drilled-in anchors that extend

through forms into concrete.

Do not attach hangers to steel deck tabs.

Do not attach hangers to steel roof deck. Attach hangers to structural members.

Space hangers not more than 48 inches (1200 mm) o.c. along each member supported directly from hangers, unless otherwise indicated; and provide hangers not more than 8 inches (200 mm) from ends of each member.

Secure bracing wires to ceiling suspension members and to supports with a minimum of four tight turns. Suspend bracing from building's structural members as required for hangers, without attaching to permanent metal forms, steel deck, or steel deck tabs. Fasten bracing wires into concrete with cast-in-place or postinstalled anchors.

Install edge moldings and trim of type indicated at perimeter of acoustical tile ceiling area and where necessary to conceal edges of acoustical units.

Apply acoustical sealant in a continuous ribbon concealed on back of vertical legs of moldings before they are installed.

Screw attach moldings to substrate at intervals not more than 16 inches (400 mm) o.c. and not more than 3 inches (75 mm) from ends, leveling with ceiling suspension system to a tolerance of 1/8 inch in 12 feet (3 mm in 3.6 m). Miter corners accurately and connect securely.

Do not use exposed fasteners, including pop rivets, on moldings and trim.

Install suspension system runners so they are square and securely interlocked with one another. Remove and replace dented, bent, or kinked members.

Arrange directionally patterned acoustical tiles as follows:

As indicated on reflected ceiling plans.

Install tiles with pattern running in one direction parallel to long axis of space.

Install tiles with pattern running in one direction parallel to short axis of space.

Install tiles in a basket-weave pattern.

Install acoustical tiles in coordination with suspension system and exposed moldings and trim. Place splines or suspension system flanges into kerfed edges so tile-to-tile joints are closed by double lap of material.

Fit adjoining tile to form flush, tight joints. Scribe and cut tile for accurate fit at borders and around penetrations through tile.

Hold tile field in compression by inserting leaf-type, spring-steel spacers between tile and moldings, spaced 12 inches (305 mm) o.c.

Fabricate access units for special suspension system access members and tile units modified as required to allow for removal of access units.

Protect lighting fixtures and air ducts to comply with requirements indicated for fire-resistance-rated assembly.

CLEANING

Clean exposed surfaces of acoustical tile ceilings, including trim, edge moldings, and suspension system members. Comply with manufacturer's written instructions for cleaning and touchup of minor finish damage. Remove and replace tiles and other ceiling components that cannot be successfully cleaned and repaired to permanently eliminate evidence of damage.

Products: Similar to Armstrong Georgian 764 and 763 as indicated in drawings.
Similar to Armstrong Georgian 898 (for corridor only) UL P265.

Light Reflectance Coefficient: Not less than [LR 0.65.]

Ceiling Tile Schedule

Interior Application:

Type: Georgian (Armstrong) or equal

Noise Reduction Coefficient: [NRC 0.65.]

Thickness: [3/4 inch (19 mm).]

Size: 24” x 24” as indicated on drawings

Suspension System for Acoustical Tile Ceiling: Where this designation is indicated, provide acoustical tile ceiling suspension system complying with the following:

Products: Similar to Armstrong Prelude Plus XL.

Direct-Hung, Double-Web Suspension System: Main and cross runners roll formed from and capped with cold-rolled steel sheet, prepainted, electrolytically zinc coated, or hot-dip galvanized according to ASTM A 653/A 653M, G01 (Z001) coating designation; other characteristics as follows:

Structural Classification: Intermediate-duty system.

END OF SECTION 09512

SECTION 09651 - RESILIENT TILE FLOORING

PART 1 - GENERAL

RELATED DOCUMENTS

Drawings and general provisions of the Contract, including General and Supplementary Conditions and Division 1 Specification Sections, apply to this Section.

SUMMARY

This Section includes the following:

Vinyl composition floor tile.

Resilient wall base and accessories.

Related Sections include the following:

SUBMITTALS

Product Data: For each type of product specified.

Samples for Initial Selection: Manufacturer's color charts consisting of units or sections of units showing the full range of colors and patterns available for each type of product indicated.

Samples for Verification: Full-size tiles of each different color and pattern of resilient floor tile specified, showing the full range of variations expected in these characteristics.

For resilient accessories, manufacturer's standard-size samples, but not less than 12 inches (300 mm) long, of each resilient accessory color and pattern specified.

Product Certificates: Signed by manufacturers of resilient products certifying that each product furnished complies with requirements.

Maintenance Data: For resilient floor tile to include in the maintenance manuals specified in Division 1.

QUALITY ASSURANCE

Installer Qualifications: Engage an experienced installer to perform work of this Section who has specialized in installing resilient products similar to those required for this Project and with a record of successful in-service performance.

Source Limitations: Obtain each type, color, and pattern of product specified from one source with resources to provide products of consistent quality in appearance and physical properties without delaying the Work.

Fire-Test-Response Characteristics: Provide products with the following fire-test-response characteristics as determined by testing identical products per test method indicated below by a testing and inspecting agency acceptable to authorities having jurisdiction.

Critical Radiant Flux: 0.45 W/sq. cm or greater when tested per ASTM E 648.

Smoke Density: Maximum specific optical density of 450 or less when tested per ASTM E 662.

DELIVERY, STORAGE, AND HANDLING

Deliver products to Project site in manufacturer's original, unopened cartons and containers, each bearing names of product and manufacturer, Project identification, and shipping and handling instructions.

Store products in dry spaces protected from the weather, with ambient temperatures maintained between 50 and 90 deg F (10 and 32 deg C).

Store tiles on flat surfaces.

Move products into spaces where they will be installed at least 48 hours before installation, unless longer conditioning period is recommended in writing by manufacturer.

PROJECT CONDITIONS

Maintain a temperature of not less than 70 deg F (21 deg C) or more than 95 deg F (35 deg C) in spaces to receive products for at least 48 hours before installation, during installation, and for at least 48 hours after installation, unless manufacturer's written recommendations specify longer time periods. After postinstallation period, maintain a temperature of not less than 55 deg F (13 deg C) or more than 95 deg F (35 deg C).

Do not install products until they are at the same temperature as the space where they are to be installed.

Close spaces to traffic during flooring installation and for time period after installation recommended in writing by manufacturer.

Install tiles and accessories after other finishing operations, including painting, have been completed.

Where demountable partitions and other items are indicated for installation on top of resilient tile flooring, install tile before these items are installed.

Do not install flooring over concrete slabs until slabs have cured and are sufficiently dry to bond with adhesive, as determined by flooring manufacturer's recommended bond and moisture test.

EXTRA MATERIALS

Furnish extra materials described below that match products installed, are packaged with protective covering for storage, and are identified with labels describing contents.

Furnish not less than one box for each 50 boxes or fraction thereof, of each type, color, pattern, class, wearing surface, and size of resilient tile flooring installed.

Furnish not less than 10 linear feet (3 linear m) for each 500 linear feet (150 linear m) or fraction thereof, of each type, color, pattern, and size of resilient accessory installed.

Deliver extra materials to Owner.

PART 2 - PRODUCTS

MANUFACTURERS

Available Products: Subject to compliance with requirements, products that may be incorporated into the Work include, but are not limited to, those indicated in the Resilient Tile Flooring Schedule at the end of Part 3.

RESILIENT TILE

Vinyl Composition Floor Tile: Products complying with ASTM F 1066 and with requirements specified in the Resilient Tile Flooring Schedule.

RESILIENT ACCESSORIES

Vinyl Wall Base: Products complying with FS SS-W-40, Type II and with requirements specified in the Resilient Tile Flooring Schedule.

INSTALLATION ACCESSORIES

Trowelable Leveling and Patching Compounds: Latex-modified, portland-cement-based formulation provided or approved by flooring manufacturer for applications indicated.

Adhesives: Water-resistant type recommended by manufacturer to suit resilient products and substrate conditions indicated.

Vinyl Edge Strips: Vinyl transition edge strips of width shown, of height required to protect exposed edge of tiles, and in maximum available lengths to minimize running joints.

PART 3 - EXECUTION

EXAMINATION

Examine substrates, areas, and conditions where installation of resilient products will occur, with Installer present, for compliance with manufacturer's requirements. Verify that substrates and conditions are satisfactory for resilient product installation and comply with requirements specified.

Concrete Subfloors: Verify that concrete slabs comply with ASTM F 710 and the following:

Slab substrates are dry and free of curing compounds, sealers, hardeners, and other materials that may interfere with adhesive bond. Determine adhesion and dryness characteristics by performing bond and moisture tests recommended by flooring manufacturer.

Subfloor finishes comply with requirements specified in Division 3 Section "Cast-in-Place Concrete" for slabs receiving resilient flooring.

Subfloors are free of cracks, ridges, depressions, scale, and foreign deposits.

For wood subfloors, verify the following:

Underlayment over subfloor complies with requirements specified in Division 6 Section "Rough Carpentry."

Underlayment surface is free of irregularities and substances that may interfere with adhesive bond, show through surface, or stain flooring.

Do not proceed with installation until unsatisfactory conditions have been corrected.

PREPARATION

General: Comply with resilient product manufacturer's written installation instructions for preparing substrates indicated to receive resilient products.

Use trowelable leveling and patching compounds, according to manufacturer's written instructions, to fill cracks, holes, and depressions in substrates.

Remove coatings, including curing compounds, and other substances that are incompatible with flooring adhesives and that contain soap, wax, oil, or silicone, using mechanical methods recommended by manufacturer. Do not use solvents.

Broom and vacuum clean substrates to be covered immediately before product installation. After cleaning, examine substrates for moisture, alkaline salts, carbonation, or dust. Do not proceed with installation until unsatisfactory conditions have been corrected.

TILE INSTALLATION

General: Comply with tile manufacturer's written installation instructions.

Lay out tiles from center marks established with principal walls, discounting minor offsets, so tiles at opposite edges of room are of equal width. Adjust as necessary to avoid using cut widths that equal less than one-half of a tile at perimeter.

Lay tiles square with room axis, unless otherwise indicated.

Match tiles for color and pattern by selecting tiles from cartons in the same sequence as manufactured and packaged, if so numbered. Cut tiles neatly around all fixtures. Discard broken, cracked, chipped, or deformed tiles.

Lay tiles with grain running in one direction.

Scribe, cut, and fit tiles to butt neatly and tightly to vertical surfaces and permanent fixtures, including built-in furniture, cabinets, pipes, outlets, edgings, door frames, thresholds, and nosings.

Extend tiles into toe spaces, door reveals, closets, and similar openings.

Maintain reference markers, holes, and openings that are in place or marked for future cutting by repeating on finish flooring as marked on subfloor. Use chalk or other nonpermanent, nonstaining marking device.

Install tiles on covers for telephone and electrical ducts, and similar items in finished floor areas. Maintain overall continuity of color and pattern with pieces of flooring installed on covers. Tightly adhere edges to perimeter of floor around covers and to covers.

Adhere tiles to flooring substrates using a full spread of adhesive applied to substrate to comply with tile manufacturer's written instructions, including those for trowel notching, adhesive mixing, and adhesive open and working times.

Provide completed installation without open cracks, voids, raising and puckering at joints, telegraphing of adhesive spreader marks, and other surface imperfections.

Hand roll tiles according to tile manufacturer's written instructions.

RESILIENT ACCESSORY INSTALLATION

General: Install resilient accessories according to manufacturer's written installation instructions.

Apply resilient wall base to walls, columns, pilasters, casework and cabinets in toe spaces, and other permanent fixtures in rooms and areas where base is required.

Install wall base in lengths as long as practicable without gaps at seams and with tops of adjacent pieces aligned.

Tightly adhere wall base to substrate throughout length of each piece, with base in continuous contact with horizontal and vertical substrates.

Do not stretch base during installation.

On masonry surfaces or other similar irregular substrates, fill voids along top edge of resilient wall base with manufacturer's recommended adhesive filler material.

Install premolded outside corners before installing straight pieces.

Install premolded outside and inside corners before installing straight pieces.

Form outside corners on job from straight pieces of maximum lengths possible, without whitening at bends. Shave back of base at points where bends occur and remove strips perpendicular to length of base that are only deep enough to produce a snug fit without removing more than half the wall base thickness.

Form inside corners on job, from straight pieces of maximum lengths possible, by cutting an inverted V-shaped notch in toe of wall base at the point where corner is formed. Shave back of base where necessary to produce a snug fit to substrate.

Place resilient accessories so they are butted to adjacent materials and bond to substrates with adhesive. Install reducer strips at edges of flooring that would otherwise be exposed.

Apply resilient products to stairs as indicated and according to manufacturer's written installation instructions.

CLEANING AND PROTECTING

Perform the following operations immediately after installing resilient products:

Remove adhesive and other surface blemishes using cleaner recommended by resilient product manufacturers.

Sweep or vacuum floor thoroughly.

Do not wash floor until after time period recommended by flooring manufacturer.

Damp-mop floor to remove marks and soil.

Protect flooring against mars, marks, indentations, and other damage from construction operations and placement of equipment and fixtures during the remainder of construction period. Use protection methods indicated or recommended in writing by flooring manufacturer.

Apply protective floor polish to floor surfaces that are free from soil, visible adhesive, and surface blemishes, if recommended in writing by manufacturer.

Use commercially available product acceptable to flooring manufacturer.

Coordinate selection of floor polish with Owner's maintenance service.

Cover products installed on floor surfaces with undyed, untreated building paper until inspection for Substantial Completion.

Do not move heavy and sharp objects directly over floor surfaces. Place plywood or hardboard panels over flooring and under objects while they are being moved. Slide or roll objects over panels without moving panels.

Clean floor surfaces not more than 4 days before dates scheduled for inspections intended to establish date of Substantial Completion in each area of Project. Clean products according to manufacturer's written recommendations.

Before cleaning, strip protective floor polish that was applied after completing installation only if required to restore polish finish and if recommended by flooring manufacturer.

After cleaning, reapply polish to floor surfaces to restore protective floor finish according to flooring manufacturer's written recommendations. Coordinate with Owner's maintenance program.

RESILIENT TILE FLOORING SCHEDULE

Size: 12 by 12 inches (304.8 by 304.8 mm).

Vinyl Composition Tile: Where this designation is indicated, provide vinyl composition floor tile complying with the following:

Armstrong
Tarkett

Color and Pattern: [As selected by Architect from manufacturer's full range of colors and patterns produced for tile complying with requirements indicated.]

Wearing Surface: Smooth.

Thickness: 1/8 inch (3.2 mm).

Size: 12 by 12 inches

Vinyl Wall Base: Where this designation is indicated, provide vinyl wall base complying with the following:

Armstrong
Roppe
Mercer

Color and Pattern: As selected by Architect from manufacturer's full range of colors and patterns produced for vinyl wall base complying with requirements indicated.

Style: Cove with top-set toe. Flat at carpet only.

Minimum Thickness: 1/8 inch (3.2 mm).

Height: 4 inches (101.6 mm).

Lengths: Coils in lengths standard with manufacturer, but not less than 96 feet (29.26 m).

Outside Corners: Premolded or formed on job. Job formed.

Inside Corners: Premolded or formed on job.

Surface: Smooth.

Vinyl Accessory Molding: Where this designation is indicated, provide vinyl accessory molding complying with the following:

Armstrong
Roppe
Mercer

Color: As selected by Architect from manufacturer's full range of colors produced for vinyl accessory molding complying with requirements indicated.

Product Description: For all applicable locations, see Finish Schedule. Cap for cove vinyl sheet floor covering. Carpet bar for tackless installations. Carpet edge for glue-down applications. Carpet nosing. Nosing for resilient floor covering. Reducer strip for resilient flooring.

Profile and Dimensions: Manufacturer’s standard product.

END OF SECTION 09651

SECTION 09900 - PAINTING

PART 1 - GENERAL

RELATED DOCUMENTS

Drawings and general provisions of Contract, including General and Supplementary Conditions and Division 1 Specification sections, apply to this section.

SUMMARY

This Section includes surface preparation, painting, and finishing of exposed interior and exterior items and surfaces.

Surface preparation, priming, and finish coats specified in this section are in addition to shop priming and surface treatment specified under other sections.

Paint exposed surfaces whether or not colors are designated in "schedules," except where a surface or material is specifically indicated not to be painted or is to remain natural. Where an item or surface is not specifically mentioned, paint the same as similar adjacent materials or surfaces. If color or finish is not designated, the Architect will select from standard colors or finishes available.

Painting includes field painting exposed bare and covered pipes and ducts (including color coding), hangers, exposed steel and iron work, and primed metal surfaces of mechanical and electrical equipment.

Painting is not required on prefinished items, finished metal surfaces, concealed surfaces, operating parts, and labels.

Prefinished items not to be painted include the following factory-finished components:

Finished mechanical and electrical equipment.
Light fixtures.
Switchgear.
Distribution cabinets.

Concealed surfaces not to be painted include wall or ceiling surfaces in the following generally inaccessible areas:

Foundation spaces.
Furred areas.
Utility tunnels.
Pipe spaces.
Duct shafts.
Elevator shafts.

Finished metal surfaces not to be painted include:

Anodized aluminum.
Stainless steel.
Chromium plate.

Copper.
Bronze.
Brass.
Operating parts not to be painted include moving parts of operating equipment such as the following:

Valve and damper operators.
Linkages.
Sensing devices.
Motor and fan shafts.

Labels: Do not paint over Underwriter's Laboratories, Factory Mutual or other code-required labels or equipment name, identification, performance rating, or nomenclature plates.

Related Sections: The following sections contain requirements that relate to this section:

Division 5 Section "Structural Steel" for shop priming structural steel.

Division 5 Section "Metal Fabrications" for shop priming ferrous metal.

Division 8 Section "Steel Doors and Frames" for shop priming steel doors and frames.

DEFINITIONS

"Paint" includes coating systems materials, primers, emulsion, enamels, stains, sealers and fillers, and other applied materials whether used as prime, intermediate, or finish coats.

SUBMITTALS

Product Data: Manufacturer's technical information, label analysis, and application instructions for each material proposed for use.

List each material and cross-reference the specific coating and finish system and application. Identify each material by the manufacturer's catalog number and general classification.

Samples for initial color selection in the form of manufacturer's color charts.

Samples for verification purposes: Provide samples of each color and material to be applied, with texture to simulate actual conditions, on representative samples of the actual substrate. Define each separate coat, including block fillers and primers. Use representative colors when preparing samples for review. Resubmit until required sheen, color, and texture are achieved.

Provide a list of material and application for each coat of each sample. Label each sample as to location and application.

QUALITY ASSURANCE

Single-Source Responsibility: Provide primers and undercoat paint produced by the same manufacturer as the finish coats.

Coordination of Work: Review other sections in which primers are provided to ensure compatibility of the total systems for various substrates. On request, furnish information on characteristics of finish materials to ensure use of compatible primers.

Notify the Architect of problems anticipated using the materials specified.

Field Samples: On wall surfaces and other exterior and interior components, duplicate finishes of prepared samples. Provide full- coat finish samples on at least 100 sq. ft. of surface until required sheen, color and texture are obtained; simulate finished lighting conditions for review of in-place work.

Final acceptance of colors will be from job-applied samples.

Material Quality: Provide the manufacturer's best quality trade sale paint material of the various coating types specified. Paint material containers not displaying manufacturer's product identification will not be acceptable.

Used to designate colors or materials are not intended to imply that products named are required or to exclude equal products of other manufacturers.

DELIVERY, STORAGE, AND HANDLING

Deliver materials to the job site in the manufacturer's original, unopened packages and containers bearing manufacturer's name and label and the following information:

Product name or title of material.
Product description (generic classification or binder type).
Federal Specification number, if applicable.
Manufacturer's stock number and date of manufacture.
Contents by volume, for pigment and vehicle constituents.
Thinning instructions.
Application instructions.
Color name and number.

Store materials not in use in tightly covered containers in a well-ventilated area at a minimum ambient temperature of 45 deg F (7 deg C). Maintain containers used in storage in a clean condition, free of foreign materials and residue.

Protect from freezing. Keep storage area neat and orderly. Remove oily rags and waste daily. Take necessary measures to ensure that workers and work areas are protected from fire and health hazards resulting from handling, mixing, and application.

JOB CONDITIONS

Apply water-based paints only when the temperature of surfaces to be painted and surrounding air temperatures are between 50 deg F (10 deg C) and 90 deg F (32 deg C).

Apply solvent-thinned paints only when the temperature of surfaces to be painted and surrounding air temperatures are between 45 deg F (7 deg C) and 95 deg F (35 deg C).

Do not apply paint in snow, rain, fog, or mist, when the relative humidity exceeds 85 percent, at temperatures less than 5 deg F (3 deg C) above the dew point, or to damp or wet surfaces.

Painting may continue during inclement weather if surfaces and areas to be painted are enclosed and heated within temperature limits specified by the manufacturer during application and drying periods.

PART 2 - PRODUCTS

MANUFACTURERS

Available Manufacturers: Subject to compliance with requirements, manufacturers offering products that may be incorporated in the work include but are not limited to the following:

Porter International.
Devoe and Raynolds.
The Glidden Company.
Benjamin Moore and Co.
PPG Industries, Pittsburgh Paints.
Pratt and Lambert.
The Sherwin-Williams Company.
Color Wheel / Comex Group.

VOC COMPLIANCE STATEMENT:

The Paint shall comply with the latest requirements of Federal, Florida State, City of Local Government requirements for the maximum allowable VOC content at the time of purchase. Such compliance shall be stated on the MSDS and container clearly identifying the product.

PART 3 - EXECUTION

EXAMINATION

Examine substrates and conditions under which painting will be performed for compliance with requirements for application of paint. Do not begin paint application until unsatisfactory conditions have been corrected.

Start of painting will be construed as the Applicator's acceptance of surfaces and conditions within a particular area.

PREPARATION

General Procedures: Remove hardware and hardware accessories, plates, machined surfaces, lighting fixtures, and similar items in place that are not to be painted, or provide surface-applied protection prior to surface preparation and painting. Remove these items if necessary for complete painting of the items and adjacent surfaces. Following completion of painting operations in each space or area, have items reinstalled by workers skilled in the trades involved.

Clean surfaces before applying paint or surface treatments. Remove oil and grease prior to cleaning. Schedule cleaning and painting so that dust and other contaminants from the cleaning process will not fall on wet, newly painted surfaces.

Surface Preparation: Clean and prepare surfaces to be painted in accordance with the manufacturer's instructions for each particular substrate condition and as specified.

Provide barrier coats over incompatible primers or remove and reprime. Notify Architect in writing of problems anticipated with using the specified finish-coat material with substrates primed by others.

Cementitious Materials: Prepare concrete, concrete masonry block, cement plaster, and mineral-fiber-reinforced cement panel surfaces to be painted. Remove efflorescence, chalk, dust, dirt, grease, oils, and release agents. Roughen as required to remove glaze. If hardeners or sealers have been used to improve curing, use mechanical methods of surface preparation.

Use abrasive blast-cleaning methods if recommended by the paint manufacturer.

Determine alkalinity and moisture content of surfaces by performing appropriate tests. If surfaces are sufficiently alkaline to cause blistering and burning of finish paint, correct this condition before application. Do not paint surfaces where moisture content exceeds that permitted in manufacturer's printed directions.

Ferrous Metals: Clean nongalvanized ferrous-metal surfaces that have not been shop coated; remove oil, grease, dirt, loose mill scale, and other foreign substances. Use solvent or mechanical cleaning methods that comply with recommendations of the Steel Structures Painting Council.

Touch up bare areas and shop-applied prime coats that have been damaged. Wire-brush, clean with solvents recommended by the paint manufacturer, and touch up with the same primer as the shop coat.

Galvanized Surfaces: Clean galvanized surfaces with non- petroleum-based solvents so that the surface is free of oil and surface contaminants. Remove pretreatment from galvanized sheet metal fabricated from coil stock by mechanical methods.

Materials Preparation: Carefully mix and prepare paint materials in accordance with manufacturer's directions.

Maintain containers used in mixing and application of paint in a clean condition, free of foreign materials and residue.

Stir material before application to produce a mixture of uniform density; stir as required during application. Do not stir surface film into material. Remove film and, if necessary, strain material before using.

Use only thinners approved by the paint manufacturer, and only within recommended limits.

APPLICATION

Apply paint in accordance with manufacturer's directions. Use applicators and techniques best suited for substrate and type of material being applied.

Do not paint over dirt, rust, scale, grease, moisture, scuffed surfaces, or conditions detrimental to formation of a durable paint film.

Paint colors, surface treatments, and finishes are indicated in "schedules."

Provide finish coats that are compatible with primers used.

The number of coats and film thickness required is the same regardless of the application method. Do not apply succeeding coats until the previous coat has cured as recommended by the manufacturer. Sand between applications where sanding is required to produce an even smooth surface in accordance with the manufacturer's directions.

Apply additional coats when undercoats, stains, or other conditions show through final coat of paint until paint film is of uniform finish, color, and appearance. Give special attention to ensure that surfaces, including edges, corners, crevices, welds, and exposed fasteners, receive a dry film thickness equivalent to that of flat surfaces.

The term "exposed surfaces" includes areas visible when permanent or built-in fixtures, convector covers, covers for finned tube radiation, grilles, and similar components are in place. Extend coatings in these areas as required to maintain the system integrity and provide desired protection.

Paint surfaces behind movable equipment and furniture same as similar exposed surfaces. Paint surfaces behind permanently fixed equipment or furniture with prime coat only before final installation of equipment.

Paint back sides of access panels and removable or hinged covers to match exposed surfaces.

Finish exterior doors on tops, bottoms, and side edges same as exterior faces.

Sand lightly between each succeeding enamel or varnish coat.

Omit primer on metal surfaces that have been shop-primed and touch up painted.

Scheduling Painting: Apply first coat to surfaces that have been cleaned, pretreated, or otherwise prepared for painting as soon as practicable after preparation and before subsequent surface deterioration.

Allow sufficient time between successive coats to permit proper drying. Do not recoat until paint has dried to where it feels firm, and does not deform or feel sticky under moderate thumb pressure and where application of another coat of paint does not cause lifting or loss of adhesion of the undercoat.

Mechanical and Electrical Work: Painting mechanical and electrical work is limited to items exposed in mechanical equipment rooms and in occupied spaces.

Mechanical items to be painted include but are not limited to:

Piping, pipe hangers, and supports.
Heat exchangers.

Tanks.
Ductwork.
Insulation.
Supports.
Motors and mechanical equipment.
Accessory items.

Electrical items to be painted include but are not limited to:

Switch gear.

Block Fillers: Apply block fillers to concrete masonry block at a rate to ensure complete coverage with pores filled.

Prime Coats: Before application of finish coats, apply a prime coat of material as recommended by the manufacturer to material that is required to be painted or finished and has not been prime coated by others. Recoat primed and sealed surfaces where evidence of suction spots or unsealed areas in first coat appears, to assure a finish coat with no burn through or other defects due to insufficient sealing.

Pigmented (Opaque) Finishes: Completely cover to provide an opaque, smooth surface of uniform finish, color, appearance, and coverage. Cloudiness, spotting, holidays, laps, brush marks, runs, sags, ropiness, or other surface imperfections will not be acceptable.

Completed Work: Match approved samples for color, texture, and coverage. Remove, refinish, or repaint work not in compliance with specified requirements.

FIELD QUALITY CONTROL

The Owner reserves the right to invoke the following test procedure at any time and as often as the Owner deems necessary during the period when paint is being applied:

The Owner will engage the services of an independent testing laboratory to sample the paint material being used. Samples of material delivered to the project will be taken, identified, sealed, and certified in the presence of the Contractor.

The testing laboratory will perform appropriate tests for the following characteristics as required by the Owner:

Quantitative materials analysis.
Abrasion resistance.
Apparent reflectivity.
Flexibility.
Washability.
Absorption.
Accelerated weathering.
Dry opacity.
Accelerated yellowness.
Recoating.
Skinning.
Color retention.
Alkali and mildew resistance.

If test results show material being used does not comply with specified requirements, the Contractor may be directed to stop painting, remove noncomplying paint, pay for testing, repaint surfaces coated with rejected paint, and remove rejected paint from previously painted surfaces if, upon repainting with specified paint, the two coatings are noncompatible.

CLEANING

Cleanup: At the end of each work day, remove empty cans, rags, rubbish, and other discarded paint materials from the site.

Upon completion of painting, clean glass and paint-spattered surfaces. Remove spattered paint by washing and scraping, using care not to scratch or damage adjacent finished surfaces.

PROTECTION

Protect work of other trades, whether to be painted or not, against damage by painting. Correct damage by cleaning, repairing or replacing, and repainting, as acceptable to Architect.

Provide "wet paint" signs to protect newly painted finishes. Remove temporary protective wrappings provided by others for protection of their work after completion of painting operations.

At completion of construction activities of other trades, touch up and restore damaged or defaced painted surfaces.

INTERIOR PAINT SCHEDULE

A. General: Provide the following paint system for the various substrates as indicated. Note that Sherwin-Williams paint numbers are used as basis of design only.

1. Interior Concrete Block (MPR, exposed concrete block walls). Semi-gloss water based epoxy system.
    a. Prime Coat: S-W Loxon Block Surfacer, A24W200.
    b. First and Second Finish Coats: S-W Water-Based Catalyzed Epoxy, B70W211/B60V25.
2. Interior Gypsum Drywall, semi-gloss water based epoxy topcoat system.
    a. Prime Coat: S-W Pro-Green 200 Interior Latex Primer, B28W600.
    b. First and Second Finish Coats: S-W Water-Based Catalyzed Epoxy, B70W211/B60V25.
3. Exterior and Interior Hollow Metal Door and Frames and Window Frames: Semi-gloss water-based epoxy system.
    a. Prime Coat: S-W Pro-Industrial Pro-Cryl Universal Primer, B66-301 Series.
    b. First and Second Coats: S-W Water-Based Catalyzed Epoxy, B0W211/B60V25.

EXTERIOR PAINT SCHEDULE

General: Provide the following paint systems for the various substrates indicated (coordinate locations with architect).

Concrete, Stucco, and Masonry (Other than concrete masonry units):

Lusterless (Flat) Acrylic Finish: 2 coats with total dry film thickness not less than 2.5 mils.

First Coat: Exterior Acrylic Emulsion
Second Coat: Exterior Acrylic Emulsion

Concrete Masonry Units:

Lusterless (Flat) Acrylic Finish: 2 coats over block filler with total dry film thickness not less than 2.5 mils, excluding the block filler.

Block Filler: High-Performance Latex Block Filler.
First Coat: Exterior Acrylic Emulsion
Second Coat: Exterior Acrylic Emulsion

Ferrous Metal: Primer is not required on shop-primed items.

Deep Color, High-Gloss Alkyd Trim Enamel: Two coats over primer.

Primer: Alkyd-Type Zinc Chromate Primer.
First Coat: Deep Color Alkyd Resin Exterior Trim Paint.
Second Coat: Deep Color Alkyd Resin Exterior Trim Paint.

Zinc-Coated Metal:

High-Gloss Alkyd Enamel: 2 finish coats over primer.

Primer: Galvanized Metal Primer.
First Coat: Alkyd Gloss Enamel.
Second Coat: Alkyd Gloss Enamel.

END OF SECTION 09900

SECTION 10155 - TOILET COMPARTMENTS

PART 1 - GENERAL

RELATED DOCUMENTS

Drawings and general provisions of the Contract, including General and Supplementary Conditions and Division 1 Specification Sections, apply to this Section.

SUMMARY

This Section includes toilet compartments and screens as follows:

Compartment Type: Solid-plastic.

Compartment Style: Floor anchored.

Screen Style: Wall mounted.

Related Sections include the following:

Division 5 Section "Metal Fabrications" for supports that attach units to overhead structural system.

Division 10 "Toilet and Bath Accessories" for toilet paper holders, grab bars, purse shelves, and similar accessories.

SUBMITTALS

Product Data: For each type and style of toilet compartment and screen specified. Include details of construction relative to materials, fabrication, and installation. Include details of anchors, hardware, and fastenings.

Shop Drawings: For fabrication and installation of toilet compartment and screen assemblies. Include plans, elevations, sections, details, and attachments to other work.

Show locations of reinforcement and cutouts for compartment-mounted toilet accessories.

Samples for Initial Selection: Manufacturer's color charts consisting of sections of actual units showing the full range of colors, textures, and patterns available for each type of compartment or screen indicated.

Samples for Verification: Of each compartment or screen color and finish required, prepared on 6-inch- (150-mm-) square Samples of same thickness and material indicated for Work.

PROJECT CONDITIONS

Field Measurements: Verify dimensions in areas of installation by field measurements before fabrication and indicate measurements on Shop Drawings. Coordinate fabrication schedule with construction progress to avoid delaying the Work.

Established Dimensions: Where field measurements cannot be made without delaying the Work, establish dimensions and proceed with fabricating units without field measurements. Coordinate
supports, adjacent construction, and fixture locations to ensure actual dimensions correspond to established dimensions.

PART 2 - PRODUCTS

MANUFACTURERS

Available Manufacturers: Subject to compliance with requirements, manufacturers offering products that may be incorporated into the Work include, but are not limited to, the following:

Manufacturers: Subject to compliance with requirements, provide products by one of the following:

Bobrick Washroom Equipment, Inc.
Santana Products, Inc.

MATERIALS

General: Provide materials that have been selected for surface flatness and smoothness. Exposed surfaces that exhibit pitting, seam marks, roller marks, stains, discolorations, telegraphing of core material, or other imperfections on finished units are unacceptable.

Solid-Plastic, Panels: Solid plastic with colors that extend throughout the surface. Provide units with eased edges and with minimum 3/4-inch- (19-mm-) thick doors and pilasters and minimum 1/2-inch- (13-mm-) thick panels and screens. Provide manufacture standard colors.

Pilaster Shoes and Sleeves (Caps): ASTM A 666, Type 304 stainless steel, not less than 0.0312 inch (0.8 mm) thick and 3 inches (75 mm) high, finished to match hardware.

For solid-plastic, in lieu of stainless-steel pilaster shoes and sleeves, manufacturer's standard plastic pilaster shoes and sleeves may be provided.

Stirrup Brackets: Manufacturer's standard ear or U-brackets for attaching panels and screens to walls and pilasters of the following material:

Material: Stainless steel.

Full-Height (Continuous) Brackets: Manufacturer's standard design for attaching panels and screens to walls and pilasters of the following material:

Material: Stainless steel. Comply with ADA requirements.

Hardware and Accessories: Manufacturer's standard design, heavy-duty operating hardware and accessories of the following material:

Material: Stainless steel.

Overhead Bracing: Manufacturer's standard continuous, extruded-aluminum head rail with

antigrip profile in manufacturer's standard finish.

Heat-Sink Strip: Manufacturer's standard continuous, extruded-aluminum strip in manufacturer's standard finish.

Anchorages and Fasteners: Manufacturer's standard exposed fasteners of stainless steel or chrome-plated steel or brass, finished to match hardware, with theft-resistant-type heads. Provide sex-type bolts for through-bolt applications. For concealed anchors, use hot-dip galvanized or other rust-resistant, protective-coated steel.

FABRICATION

General: Provide standard doors, panels, screens, and pilasters fabricated for compartment system. Provide units with cutouts and drilled holes to receive compartment-mounted hardware, accessories, and grab bars, as indicated.

Provide internal reinforcement in metal units for compartment-mounted hardware, accessories, and grab bars, as indicated.

Solid-Plastic, Compartments and Screens: Provide aluminum heat-sink strips at exposed bottom edges of HDPE units to prevent burning.

Floor-Anchored Compartments: Provide manufacturer's standard corrosion-resistant anchoring assemblies complete with threaded rods, lock washers, and leveling adjustment nuts at pilasters for structural connection to floor. Provide shoes at pilasters to conceal anchorage.

Provide manufacturer's standard 4-inch- (100-mm-) high, overhead cross bracing.

Wall-Hung Screens: Provide units in sizes indicated of same construction and finish as compartment panels, unless otherwise indicated.

Doors: Unless otherwise indicated, provide 24-inch- (610-mm-) wide in-swinging doors for standard toilet compartments and 36-inch- (914-mm-) wide out-swinging doors with a minimum 32-inch- (813-mm-) wide clear opening for compartments indicated to be handicapped accessible.

Hinges: Manufacturer's standard self-closing type that can be adjusted to hold door open at any angle up to 90 degrees.

Latch and Keeper: Manufacturer's standard surface-mounted latch unit with combination rubber-faced door strike and keeper designed for emergency access. Provide units that comply with accessibility requirements of authorities having jurisdiction at compartments indicated to be handicapped accessible.

Door Bumper: Manufacturer's standard rubber-tipped bumpers at out-swinging doors or entrance screen doors.

Door Pull: Manufacturer's standard unit that complies with accessibility requirements of authorities having jurisdiction at out-swinging doors. Provide units on both sides of doors at compartments indicated to be handicapped accessible.

STAINLESS-STEEL SHEET FINISHES

General: Comply with NAAMM's "Metal Finishes Manual for Architectural and Metal Products" for recommendations relative to applying and designating finishes.

Remove or blend tool and die marks and stretch lines into finish.

Grind and polish surfaces to produce uniform, directional textured, polished finish indicated, free of cross scratches. Run grain with long dimension of each piece.

Finish: No. 3 directional polish.

When polishing is completed, passivate and rinse surfaces. Remove embedded foreign matter and leave surfaces chemically clean.

Protect mechanical finishes on exposed surfaces from damage by applying a strippable, temporary protective covering before shipment.

PART 3 - EXECUTION

INSTALLATION

General: Comply with manufacturer's written installation instructions. Install units rigid, straight, plumb, and level. Provide clearances of not more than 1/2 inch (13 mm) between pilasters and panels and not more than 1 inch (25 mm) between panels and walls. Secure units in position with manufacturer's recommended anchoring devices.

Secure panels to walls and panels with not less than 2 stirrup brackets attached near top and bottom of panel. Locate wall brackets so holes for wall anchors occur in masonry or tile joints. Align brackets at pilasters with brackets at walls.

Floor-Anchored Compartments: Set pilaster units with anchors penetrating not less than 2 inches (50 mm) into structural floor, unless otherwise indicated in manufacturer's written instructions. Level, plumb, and tighten pilasters. Hang doors and adjust so tops of doors are level with tops of pilasters when doors are in closed position.

Screens: Attach with anchoring devices according to manufacturer's written instructions and to suit supporting structure. Set units level and plumb and to resist lateral impact.

ADJUSTING AND CLEANING

Hardware Adjustment: Adjust and lubricate hardware according to manufacturer's written instructions for proper operation. Set hinges on in-swinging doors to hold open approximately 30 degrees from closed position when unlatched. Set hinges on out-swinging doors and swing doors in entrance screens to return to fully closed position.

Provide final protection and maintain conditions that ensure toilet compartments and screens are without damage or deterioration at the time of Substantial Completion.

END OF SECTION 10155

SECTION 10200 - LOUVERS AND VENTS

PART 1 - GENERAL

RELATED DOCUMENTS

Drawings and general provisions of the Contract, including General and Supplementary Conditions and Division 1 Specification Sections, apply to this Section.

SUMMARY

This Section includes the following:

Fixed, extruded-aluminum louvers.

Fixed, formed-metal louvers.

Related Sections include the following:

Division 7 Section "Joint Sealants" for sealants installed in perimeter joints between louver frames and adjoining construction.

DEFINITIONS

Louver Terminology: Definitions of terms for metal louvers contained in AMCA 501 apply to this Section, unless otherwise defined in this Section or in referenced standards.

Standard Free Area: Free area of a louver 48 inches (1220 mm) wide by 48 inches (1220 mm) high, identical to that provided.

Maximum Standard Airflow: Airflow at point of beginning water penetration through a louver 48 inches (1220 mm) wide by 48 inches (1220 mm) high, identical to that provided.

Drainable-Blade Louver: Louver designed to collect and drain water to exterior at sill by means of gutters in front edges of blades and channels in jambs and mullions.

PERFORMANCE REQUIREMENTS

Structural Performance: Provide exterior metal louvers capable of withstanding the effects of loads and stresses from wind and normal thermal movement without evidencing permanent deformation of louver components including blades, frames, and supports; noise or metal fatigue caused by louver blade rattle or flutter; or permanent damage to fasteners and anchors.

Wind Load: Uniform pressure (velocity pressure) of 20 lbf/sq. ft. (960 Pa), acting inward or outward.

Thermal Movements: Provide louvers that allow for thermal movements resulting from the following maximum change (range) in ambient and surface temperatures by preventing buckling, opening of joints, overstressing of components, and other detrimental effects:

Temperature Change (Range): 120 deg F (67 deg C), ambient; 180 deg F (100 deg C), material surfaces.

Air-Performance, Water-Penetration, and Air-Leakage Ratings: Provide louvers complying with performance requirements indicated, as demonstrated by testing manufacturer's stock units 48 inches (1220 mm) wide by 48 inches (1220 mm) high. Test units according to AMCA 500.

Perform testing on unpainted, cleaned, degreased units.

Perform water-penetration testing on louvers without screens.

Airborne Sound Transmission Loss: Provide acoustical louvers complying with airborne sound transmission loss ratings indicated, as demonstrated by testing manufacturer's stock units according to ASTM E 90.

SUBMITTALS

Product Data: For each type of product specified.

Shop Drawings: For louver units and accessories. Include plans; elevations; sections; and details showing profiles, angles, and spacing of louver blades. Show unit dimensions related to wall openings and construction; free area for each size indicated; profiles of frames at jambs, heads, and sills; and anchorage details and locations.

For installed louvers and vents indicated to comply with design loadings, include structural analysis data signed and sealed by the qualified professional engineer responsible for their preparation.

Wiring Diagrams: Detail power, signal, and control systems for motorized adjustable louvers and differentiate between manufacturer-installed and field-installed wiring.

Samples for Initial Selection: Manufacturer's color charts showing the full range of colors available for units with factory-applied color finishes.

Samples for Verification: Of each type of metal finish required, prepared on Samples of same thickness and material indicated for final Work. Where finishes involve normal color and texture variations, include Sample sets showing the full range of variations expected.

Product Certificates: Signed by manufacturers of louvers certifying that the products furnished comply with requirements and are licensed to bear the AMCA seal based on tests made according to AMCA 500 and complying with AMCA's Certified Ratings Program.

Product Test Reports: Indicate compliance of products with requirements based on comprehensive testing of current products.

Qualification Data: For firms and persons specified in "Quality Assurance" Article to demonstrate their capabilities and experience. Include lists of completed projects with project names and addresses, names and addresses of architects and owners, and other information specified.

QUALITY ASSURANCE

Professional Engineer Qualifications: A professional engineer who is legally qualified to practice in jurisdiction where Project is located and who is experienced in providing engineering services of kind indicated. Engineering services are defined as those performed for installations of louvers that are similar to those indicated for this Project in material, design, and extent.

Source Limitations: Obtain louvers and vents through one source from a single manufacturer where alike in one or

more respects regarding type, design, or factory-applied color finish.

Welding Standards: As follows:

Comply with AWS D1.2, "Structural Welding Code--Aluminum."

Comply with AWS D1.3, "Structural Welding Code--Sheet Steel."

Certify that each welder has satisfactorily passed AWS qualification tests for welding processes involved and, if pertinent, has undergone recertification.

SMACNA Standard: Comply with SMACNA's "Architectural Sheet Metal Manual" recommendations for fabrication, construction details, and installation procedures.

UL and NEMA Compliance: Provide motors and related components for motor-operated adjustable louvers that are listed and labeled by UL and comply with applicable NEMA standards.

PROJECT CONDITIONS

Field Measurements: Verify louver openings by field measurements before fabrication and indicate measurements on Shop Drawings. Coordinate fabrication schedule with construction progress to avoid delaying the Work.

Established Dimensions: Where field measurements cannot be made without delaying the Work, establish opening dimensions and proceed with fabricating louvers without field measurements. Coordinate construction to ensure that actual opening dimensions correspond to established dimensions.

PART 2 - PRODUCTS

MANUFACTURERS

Available Manufacturers: Subject to compliance with requirements, manufacturers offering products that may be incorporated into the Work include, but are not limited to, the following:

Manufacturers: Subject to compliance with requirements, provide products by one of the following:

Green Heck or Equal.

Color: As selected from standard range of colors.

MATERIALS

Aluminum Extrusions: ASTM B 221 (ASTM B 221M), alloy 6063-T5 or T-52.

Fasteners: Of same basic metal and alloy as fastened metal or 300 series stainless steel, unless otherwise indicated. Do not use metals that are incompatible with joined materials.

Use types and sizes to suit unit installation conditions.

Use Phillips flat-head screws for exposed fasteners, unless otherwise indicated.

Anchors and Inserts: Of type, size, and material required for loading and installation indicated. Use nonferrous metal or

hot-dip galvanized anchors and inserts for exterior installations and elsewhere as needed for corrosion resistance. Use toothed steel or expansion bolt devices for drilled-in-place anchors.

Bituminous Paint: Cold-applied asphalt mastic complying with SSPC-Paint 12 but containing no asbestos fibers, or cold-applied asphalt emulsion complying with ASTM D 1187.

FABRICATION, GENERAL

Assemble louvers in factory to minimize field splicing and assembly. Disassemble units as necessary for shipping and handling limitations. Clearly mark units for reassembly and coordinated installation.

Continuous Vertical Assemblies: Where height of louver units exceeds fabrication and handling limitations, fabricate units to permit field-bolted assembly with close-fitting joints in jambs and mullions, reinforced with splice plates and without interrupting blade-spacing pattern.

Maintain equal louver blade spacing, including separation between blades and frames at head and sill, to produce uniform appearance.

Maintain equal louver blade spacing to produce uniform appearance.

Fabricate frames, including integral sills, to fit in openings of sizes indicated, with allowances made for fabrication and installation tolerances, adjoining materials' tolerances, and perimeter sealant joints.

Frame Type: Exterior flange, unless otherwise indicated.

Include supports, anchorages, and accessories required for complete assembly.

Provide vertical mullions of type and at spacings indicated, but not more than recommended by manufacturer, or 72 inches (1830 mm) o.c., whichever is less. At horizontal joints between louver units, provide horizontal mullions, unless continuous vertical assemblies are indicated.

Provide sill extensions and loose sills made of same material as louvers where indicated or required for drainage to exterior and to prevent water penetrating to interior.

Join frame members to one another and to fixed louver blades with fillet welds concealed from view, unless otherwise indicated or size of louver assembly makes bolted connections between frame members necessary.

Join frame members to one another and to fixed louver blades with fillet welds, threaded fasteners, or both, as standard with louver manufacturer, concealed from view; unless otherwise indicated or size of louver assembly makes bolted connections between frame members necessary.

FIXED, EXTRUDED-ALUMINUM LOUVERS

Louver Construction: Provide fixed-blade louvers with extruded-aluminum frames and blades.

Similar to Green Heck EHH-601D or equal.

Horizontal, Drainable-Blade Louvers: As follows:

Louver Depth: 6 inches (188 mm).

Frame Thickness: 0.081 inch (2.06 mm).

Blade Thickness: 0.081 inch (2.06 mm).

Performance Requirements: Maximum standard airflow not less than 7000 cfm (3300 L/s) with not more than 0.20- inch wg (50-Pa) static-pressure loss.

Blade Profile: Drainge.

Blade Spacing: 2 inches (25 mm) o.c.

Continuous, Horizontal, Drainable-Blade Louvers: Fabricated with close-fitting, field-made splice joints in blades designed to permit expansion and contraction without deforming blades or framework and with mullions recessed from front edges of blades so blades have continuous appearance.

LOUVER SCREENS

General: Provide each exterior louver with louver screens complying with the following requirements:

Screen Location for Fixed Louvers: Interior face.

Screening Type: Insect screening where indicated.

Secure screens to louver frames with stainless-steel machine screws, spaced a maximum of 6 inches (150 mm) from each corner and at 12 inches (300 mm) o.c.

Louver Screening for Aluminum Louvers: As follows:

Insect Screening: Aluminum, 18 by -16 (1.4 by -1.6 mm) mesh, 0.012-inch (0.30-mm) wire.

FINISHES, GENERAL

Comply with NAAMM's "Metal Finishes Manual for Architectural and Metal Products" for recommendations for applying and designating finishes.

Finish louvers after assembly.

ALUMINUM FINISHES

Finish designations prefixed by AA comply with system established by the Aluminum Association for designating aluminum finishes.

High-Performance Organic Coating Finish: AA-C12C42R1x (Chemical Finish: cleaned with inhibited chemicals; Chemical Finish: acid-chromate-fluoride-phosphate conversion coating; Organic Coating: as specified below). Prepare, pretreat, and apply coating to exposed metal surfaces to comply with coating and resin manufacturers' written instructions.

Fluoropolymer Two-Coat Coating System: Manufacturer's standard two-coat, thermocured system consisting of specially formulated inhibitive primer and fluoropolymer color topcoat containing not less than 70 percent polyvinylidene fluoride resin by weight; complying with AAMA 605.2.

PART 3 - EXECUTION

PREPARATION

Coordinate Setting Drawings, diagrams, templates, instructions, and directions for installation of anchorages that are to be embedded in concrete or masonry construction. Coordinate delivery of such items to Project site.

INSTALLATION

Locate and place louver units level, plumb, and at indicated alignment with adjacent work.

Use concealed anchorages where possible. Provide brass or lead washers fitted to screws where required to protect metal surfaces and to make a weathertight connection.

Form closely fitted joints with exposed connections accurately located and secured.

Provide perimeter reveals and openings of uniform width for sealants and joint fillers, as indicated.

Repair finishes damaged by cutting, welding, soldering, and grinding. Restore finishes so no evidence remains of corrective work. Return items that cannot be refinished in the field to the factory, make required alterations, and refinish entire unit or provide new units.

Protect galvanized and nonferrous-metal surfaces from corrosion or galvanic action by applying a heavy coating of bituminous paint on surfaces that will be in contact with concrete, masonry, or dissimilar metals.

Install concealed gaskets, flashings, joint fillers, and insulation, as louver installation progresses, where weathertight louver joints are required. Comply with Division 7 Section "Joint Sealants" for sealants applied during louver installation.

ADJUSTING, CLEANING, AND PROTECTING

Test operation of adjustable louvers and adjust as needed to produce fully functioning units that comply with requirements.

Periodically clean exposed surfaces of louvers and vents that are not protected by temporary covering to remove fingerprints and soil during construction period. Do not let soil accumulate until final cleaning.

Before final inspection, clean exposed surfaces with water and a mild soap or detergent not harmful to finishes. Thoroughly rinse surfaces and dry.

Protect louvers and vents from damage during construction. Use temporary protective coverings where needed and approved by louver manufacturer. Remove protective covering at the time of Substantial Completion.

Restore louvers and vents damaged during installation and construction so no evidence remains of corrective work. If results of restoration are unsuccessful, as determined by Architect, remove damaged units and replace with new units.

Clean and touch up minor abrasions in finishes with air-dried coating that matches color and gloss of, and is compatible with, factory-applied finish coating.

END OF SECTION 10200

SECTION 10425 - SIGNS

PART 1 - GENERAL

RELATED DOCUMENTS

Drawings and general provisions of the Contract, including General and Supplementary Conditions and Division 1 Specification Sections, apply to this Section.

SUMMARY

This Section includes the following types of signs:

Panel signs. For typical rooms, ADA compliant.

Panel signs for H/C restroom and facility.

Related Sections: The following Sections contain requirements that relate to this Section:

SUBMITTALS

General: Submit the following according to the Conditions of the Contract and Division 1 Specification Sections.

Product data for each type of sign specified, including details of construction relative to materials, dimensions of individual components, profiles, and finishes.

Shop drawings showing fabrication and erection of signs. Include plans, elevations, and large-scale sections of typical members and other components. Show anchors, grounds, layout, reinforcement, accessories, and installation details.

Provide message list for each sign required, including large-scale details of wording and lettering layout.

For signs supported by or anchored to permanent construction, provide setting drawings, templates, and directions for installation of anchor bolts and other anchors to be installed as a unit of Work in other Sections.

Samples: Provide the following samples of each sign component for initial selection of color, pattern and surface texture as required and for verification of compliance with requirements indicated.

QUALITY ASSURANCE

Sign Fabricator Qualifications: Firm experienced in producing signs similar to those indicated for this Project, with a record of successful in-service performance, and sufficient production capacity to produce sign units required without causing delay in the Work.

Single-Source Responsibility: For sign type required, obtain signs from one source of a single manufacturer.

PROJECT CONDITIONS

Field Measurements: Take field measurements prior to preparation of shop drawings and fabrication to ensure proper fitting. Show recorded measurements on final shop drawings. Coordinate fabrication schedule with construction progress to avoid delay.

PART 2 - PRODUCTS

MANUFACTURERS

Available Manufacturers: Subject to compliance with requirements, manufacturers offering products that may be incorporated in the Work include, but are not limited to, the following:

Manufacturers of Panel Signs:

Masterwork Studios
APCO Graphics, Inc.
Mohawk Sign Systems.

MATERIALS

Plastic Laminate: Provide high-pressure plastic laminate engraving stock with face and core plies in contrasting colors, in finishes and color combinations indicated or, if not indicated, as selected from the manufacturer's standards.

Fasteners: Use concealed fasteners fabricated from metals that are not corrosive to the sign material and mounting surface.

Anchors and Inserts: Use nonferrous metal or hot-dipped galvanized anchors and inserts for exterior installations and elsewhere as required for corrosion resistance. Use toothed steel or lead expansion bolt devices for drilled-in-place anchors. Furnish inserts, as required, to be set into concrete or masonry work.

Colored Coatings for Acrylic Plastic Sheet: Use colored coatings, including inks and paints for copy and background colors, that are recommended by acrylic manufacturers for optimum adherence to acrylic surface and are nonfading for the application intended.

PANEL SIGNS

Tactile Signs: Provide message having raised 1/32” high figures. Solid color acrylic plastic 025 inch thick with ½” radius corners; raised letters with contrasting color. Characters formed to Helvetica style.

All ADA compliant signs to be equivalent to Romark Ultra Matte laminated to ¼” styrene substrate with ½” radius corners. Colors as selected. All ADA signs to have 1/32” raised tactile text and Grade II Braille.

ADA Room Signs to have minimum 5/8” text. Room names to be taken from room finish schedule.

Handicap Restroom Signs, provide Pictograms to be men or women or unisex and provide at all universal handicap symbols as required.

PART 3 - EXECUTION

INSTALLATION

General: Locate sign units and accessories at ADA height requirements and on latch side of doors or as directed by Architect, using methods of type described and in compliance with the manufacturer's instructions, unless otherwise indicated.

Install sign units level, plumb and at the height indicated with sign surfaces free from distortion or other defects of appearance.

Wall-Mounted Panel Signs: Attach panel signs to wall surfaces using the methods indicated below:

Vinyl-Tape Mounting: Use double-sided foam tape to mount signs to smooth, nonporous surfaces. Do not use this method for vinyl-covered or rough surfaces.

Silicone-Adhesive Mounting: Use liquid silicone adhesive recommended by the sign manufacturer to attach sign units to irregular, porous, or vinyl-covered surfaces. Use double-sided vinyl tape where recommended by the sign manufacturer to hold the sign in place until the adhesive has fully cured.

Shim Plate Mounting: Provide 1/8-inch-thick concealed aluminum shim plates with predrilled and countersunk holes, at locations indicated, and where other mounting methods are not practicable. Attach the plate with fasteners and anchors suitable for secure attachment to the substrate. Attach panel sign units to the plate using the method specified above.

CLEANING AND PROTECTION

After installation, clean soiled sign surfaces according to the manufacturer's instructions. Protect units from damage until acceptance by the Owner.

END OF SECTION 10425

SECTION 10520 - FIRE-PROTECTION SPECIALTIES

PART 1 - GENERAL

RELATED DOCUMENTS

Drawings and general provisions of the Contract, including General and Supplementary Conditions and Division 1 Specification Sections, apply to this Section.

SUMMARY

This Section includes the following:

Portable fire extinguishers.

Fire-protection cabinets for the following:

Portable fire extinguishers.

Related Sections include the following:

Division 10 Section "Signs" for directional signage to out-of-sight fire extinguishers and cabinets.

SUBMITTALS

Product Data: Include construction details, material descriptions, dimensions of individual components and profiles, and finishes for fire-protection specialties.

Fire Extinguishers: Include rating and classification.

Cabinets: Include roughing-in dimensions, details showing mounting methods, relationships of box and trim to surrounding construction, door hardware, cabinet type, trim style, and panel style.

Show location of knockouts for hose valves.

Samples for Initial Selection: Manufacturer's color charts consisting of units or sections of units showing the full range of colors, textures, and patterns available for each type of cabinet finish indicated.

Samples for Verification: For each type of exposed cabinet finish required, prepared on Samples of size indicated below and of same thickness and material indicated for the Work. If finishes involve normal color and texture variations, include sample sets showing the full range of variations expected.

Size: 6-by-6-inch- (150-by-150-mm-) square Samples.

QUALITY ASSURANCE

Source Limitations: Obtain fire extinguishers and cabinets through one source from a single manufacturer.

NFPA Compliance: Fabricate and label fire extinguishers to comply with NFPA 10, "Standard for Portable Fire Extinguishers."

Fire Extinguishers: Listed and labeled for type, rating, and classification by an independent testing agency acceptable to authorities having jurisdiction.

Provide extinguishers listed and labeled by FM.

COORDINATION

Coordinate size of cabinets to ensure that type and capacity of fire extinguishers indicated and provided by Owner under separate Contract are accommodated.

Coordinate size of cabinets to ensure that type and capacity of hoses, hose valves, and hose racks indicated are accommodated.

PART 2 - PRODUCTS

MANUFACTURERS

Available Manufacturers: Subject to compliance with requirements, manufacturers offering products that may be incorporated into the Work include, but are not limited to, the following:

Manufacturers: Subject to compliance with requirements, provide products by one of the following:

Portable Fire Extinguishers:

Larsen's Manufacturing Company.

Fire-Protection Cabinets:

Larsen's Manufacturing Company.

Available Products: Subject to compliance with requirements, provide one of the products indicated for each designation in the Fire-Protection Cabinet Schedule at the end of Part 3.

MATERIALS

Cold-Rolled Steel Sheet: Carbon steel, complying with ASTM A 366/A 366M, commercial quality, stretcher leveled, temper rolled.

PORTABLE FIRE EXTINGUISHERS

General: Provide fire extinguishers of type, size, and capacity for each cabinet and other locations indicated.

Multipurpose Dry-Chemical Type: UL-rated 4-A:60-B:C, 10-lb (4.5-kg) nominal capacity, in enameled-steel container.

WET CHEMICAL TYPE (KITCHEN LOCATION): UL Rated K, 15-LB (6 liter) nominal capacity in stainess steel container.

FIRE-PROTECTION CABINETS

Cabinet Construction: Provide manufacturer's standard box (tub), with trim, frame, door, and hardware to suit cabinet type, trim style, and door style indicated. Weld joints and grind smooth. Miter and weld perimeter door frames.

Fire-Rated Cabinets: Listed and labeled to meet requirements of ASTM E 814 for fire-resistance rating of wall where it is installed.

Construct fire-rated cabinets with double walls fabricated from 0.0478-inch- (1.2-mm-) thick, cold-rolled steel sheet lined with minimum 5/8-inch- (16-mm-) thick, fire-barrier material.

Provide factory-drilled mounting holes.

Cabinet Metal: Stainless-steel sheet.

Shelf: Same metal and finish as cabinet.

Cabinet Type: Suitable for the following:

Fire extinguisher.

Cabinet Mounting: Suitable for the following mounting conditions:

Semirecessed: Cabinet box partially recessed in walls of shallow depth to suit style of trim indicated.

Cabinet Trim Style: Fabricate cabinet trim in one piece with corners rolled edge, welded, and ground smooth.

Cabinet Trim Material: Manufacturer's standard, as follows:

Steel sheet.

Door Material: Manufacturer's standard, as follows:

Stainless-steel sheet, 18 gauge thick.

Door Construction: Fabricate doors according to manufacturer's standards, of materials indicated, and coordinated with cabinet types and trim styles selected.

Provide minimum 1/2-inch- (13-mm-) thick door frames, fabricated with tubular stiles and rails, and hollow-metal design.

Provide inside latch and lock for break-glass panels.

Door Hardware: Provide manufacturer's standard door-operating hardware of proper type for cabinet type, trim style, and door material and style indicated. Provide either lever handle with cam-action latch, or exposed or concealed door pull and friction latch. Provide concealed or continuous-type hinge permitting door to open 180 degrees.

ACCESSORIES

Mounting Brackets: Manufacturer's standard steel, designed to secure extinguisher, of sizes required for types and capacities of extinguishers indicated, with plated or baked-enamel finish.

Provide brackets for extinguishers mounted on wall.

Door Locks: Provide cylinder lock, with all cabinets keyed alike.

Identification: Provide lettering to comply with authorities having jurisdiction for letter style, color, size, spacing, and location. Locate as indicated by Architect.

Identify bracket-mounted extinguishers with the words "FIRE EXTINGUISHER" in red letter decals applied to wall surface.

Identify fire extinguisher in cabinet with the words "FIRE EXTINGUISHER" applied to door.

Application Process: Silk-screened.

Lettering Color: Red.

Orientation: Vertical.

COLORS AND TEXTURES

Colors and Textures: As selected by Architect from manufacturer's full range for these characteristics.

FINISHES, GENERAL

Comply with NAAMM's "Metal Finishes Manual for Architectural and Metal Products" for recommendations for applying and designating finishes.

Protect mechanical finishes on exposed surfaces from damage by applying a strippable, temporary protective covering before shipping.

Appearance of Finished Work: Variations in appearance of abutting or adjacent pieces are acceptable if they are within one-half of the range of approved Samples. Noticeable variations in the same piece are not acceptable. Variations in appearance of other components are acceptable if they are within the range of approved Samples and are assembled or installed to minimize contrast.

Cabinet and Door Finishes: Provide manufacturer's standard baked-enamel paint for the following:

Exterior of cabinets and doors, except for those surfaces indicated to receive another finish.

Interior of cabinets and doors.

STEEL FINISHES

Surface Preparation: Clean surfaces of dirt, oil, grease, mill scale, rust, and other contaminants that could impair paint bond using manufacturer's standard methods.

Factory Priming for Field-Painted Finish: Apply shop primer specified below immediately after surface preparation and pretreatment.

Shop Primer: Manufacturer's or fabricator's standard, fast-curing, lead- and chromate-free, universal primer, selected for resistance to normal atmospheric corrosion, for compatibility with substrate and field-applied finish paint system indicated, and for capability to provide a sound foundation for field-applied topcoats despite prolonged exposure.

Baked-Enamel Finish: Immediately after cleaning and pretreating, apply manufacturer's standard two-coat, baked-enamel finish consisting of prime coat and thermosetting topcoat. Comply with paint manufacturer's written instructions for applying and baking to achieve a minimum dry film thickness of 2 mils (0.05 mm).

STAINLESS-STEEL FINISHES

General: Remove or blend tool and die marks and stretch lines into finish. Grind and polish surfaces to produce uniform, directionally textured polished finish indicated, free of cross scratches. Run grain with long dimension of each piece.

Bright, Directional Polish: No. 4 finish.

Satin, Directional Polish: No. 6 finish.

PART 3 - EXECUTION

EXAMINATION

Examine roughing-in for hose valves, hose racks, and cabinets to verify actual locations of piping connections before cabinet installation.

Examine walls and partitions for suitable framing depth and blocking where recessed and semirecessed cabinets are to be installed.

Examine fire extinguishers for proper charging and tagging.

Remove and replace damaged, defective, or undercharged units.

Proceed with installation only after unsatisfactory conditions have been corrected.

INSTALLATION

Comply with manufacturer's written instructions for installing fire-protection specialties.

Install in locations and at mounting heights indicated or, if not indicated, at heights acceptable to authorities having jurisdiction.

Prepare recesses for cabinets as required by type and size of cabinet and trim style.

Fasten mounting brackets to structure and cabinets, square and plumb.

Fasten cabinets to structure, square and plumb.

ADJUSTING, CLEANING, AND PROTECTION

Adjust cabinet doors that do not swing or operate freely.

Refinish or replace cabinets and doors damaged during installation.

Provide final protection and maintain conditions that ensure that cabinets and doors are without damage or deterioration at the time of Substantial Completion.

FIRE-PROTECTION CABINET SCHEDULE

Fire-Protection Cabinet: Where this designation is indicated, provide fire-protection cabinet complying with the following:

Products: Larsen “Cameo” SS-SF C2409-5R

Construction: Nonrated and 1-hour fire rated where located in rated wall construction

Cabinet Material: Stainless-steel sheet

Type: Fire extinguisher

Mounting: Semirecessed

END OF SECTION 10520

SECTION 10730

EXTRUDED ALUMINUM WALKWAY COVERS

PART 1 GENERAL

1.1 RELATED DOCUMENTS:

A. The bidding requirements, general conditions, supplementary conditions, drawings and requirements of division one specification shall apply to work specified in this section.

1.2 DESCRIPTION OF WORK:

A. The extent of aluminum walkway cover is shown on the drawings and as specified herein.

B. Definition: Extruded Aluminum Walkway Cover shall consist entirely of extruded aluminum sections (roll-formed not acceptable). System shall consist of heli-arc welded, one-piece rigid structural bents (column and beam assemblies), decking, fascia, accessory items and hardware to provide a complete system.

C. Water shall drain from deck into designated beams and out at grade level of columns through weepholes.

1.3 SUBMITTALS

A. Shop Drawings: Submit detailed drawings, layout of walkway cover system, bent locations (identify drain columns and wet bents), all mechanical joint locations with complete details, connections, jointing and accessories. Include details of concrete footings and bent anchorage.

B. Product Data: Submit manufacturer's product data, specifications, component performance data and installation instructions.

C. Calculations: Provide signed and sealed structural calculations for the proposed walkway cover, by a professional engineer registered in the state of Florida, who professes his discipline to be structural engineering.

1.04 QUALITY ASSURANCE

A. Codes and Standards: Comply with provisions of the following except as otherwise indicated.

Standard Building Code, latest addition with amendments, if any.

AWS (American Welding Society) standards for structural aluminum welding.

B. Manufacturer: Obtain aluminum covered walkway system from only one (1) manufacturer, although several may be indicated as offering products complying with requirements.

C. Installer Qualification: Firm with not less than three (3) years experience in installation of aluminum walkway covers of type, quantity and installation methods similar to work of this section.

D. Field Measurements: Take field measurements prior to preparation of shop drawings and fabrication where possible, to insure proper fitting of work. However, allow for adjustments within specified tolerations wherever taking of field measurements before fabrication might delay work.

E. Shop Assembly: Pre-assemble units in shop to greatest extent possible and disassemble as necessary for shipping and handling limitations. Clearly mark units for re-assembly and coordinated installation.

F. Coordination: Coordinate work of this section with work of other sections which interface with covered walkway system. (sidewalks, curbs, building fascias, etc.).

1.5 PERFORMANCE REQUIREMENTS:

A. System Performance: Provide aluminum covered walkway system that has been designed, produced, fabricated and installed to withstand normal temperature changes as well as live loading, dead loading and wind loading in compliance with Standard Building Code requirements for geographic area in which work is located.

B. Sizes shown on drawings are to be considered minimum.

C. Structure shall be capable of sustaining severe icing, hail, hurricane force winds and supporting a concentrated load such as being walked upon.

PART 2 PRODUCT

2.01 ACCEPTABLE MANUFACTURERS

A. DITT-DECK Extruded Aluminum Walkway Cover System by Dittmer Architectural Aluminum is specified as the standard quality.

B. Equivalent systems by other manufacturers will be approved by addendum provided the following are submitted ten (10) days prior to bid opening and are complete:

1. Submit evidence of having operated a successful business of manufacturing and installing complete extruded aluminum walkway cover systems.

a. Business must have been in operation under submitted name and ownership for a minimum of ten (10) years.

b. Submit a list of successfully completed projects of similar scope, size and complexity within the state of Florida. List shall include job name, date of completion, architect's firm name, address and phone number, owner's name with representative and phone number.

c. Submit complete shop drawings for above completed jobs.

d. Submit complete details with structural properties (moment of inertia, section modules, modules of elasticity, etc.) for all proposed sections (beams, columns, decking and other structural members).

e. Comply with the requirements pertaining to substitution as set forth in Section 4, General Provisions – Materials and Equipment, G-4.05; Equivalent Quality.

2.02 MATERIALS

A. All aluminum extrusions shall be alloy 6063 heat treated to a T-6 temper.

B. Standard finish for all components shall be satin anodize meeting Aluminum Association Specification AA-M-10C-22A-21 minimum.

C. Fasteners:

1. Deck Screws (rivets not permitted): Type 18-8 non-magnetic stainless steel sealed with a neoprene "O" ring beneath 5/8" outside dimension, conical washer.
2. Fascia Rivets: Size 3/16" by ½" grip range aluminum rivets with aluminum mandrel.
3. Bolts: All bolts, nuts and washers to be 18-8 non-magnetic stainless steel.
4. Tek Screws: not permitted.

D. Warranty:

1. Manufacturer shall warrant the entire system against defects in labor and materials for a period of one (1) year commencing on the date of substantial completion as established in Division One of these specifications.
2. Intention of this warranty is the manufacturer will come onto the jobsite and do all necessary to effect corrections of any deficiencies.
3. Prima Facie Evidence of defects in labor and material may include but is not limited to, one or more of the following:
   a. Moisture Leaks
   b. Metal failure including excessive deflection
   c. Fastener failure
   d. Finish failure

2.03 FABRICATION

A. Comply with indicated profiles, dimensional requirements and structural requirements.

B. Use sections true to details with clean, straight sharply defined profiles and smooth surfaces of uniform color and texture, free from defects impairing strength and durability.

C. All welding to be done by heli-arc process.

D. Bents shall consist of shop welded one piece units. When size of bents do not permit shipment as a welded unit, concealed mechanical joints may be used.

E. Mechanical joints shall consist of stainless steel bolts with a minimum of two (2) bolts per fastening. Bolts and nuts shall be installed in a concealed manner utilizing ½" thick by 1 ½" aluminum bolt bars welded to structural members. All such mechanical joints must be detailed on shop drawings showing all locations.

F. Roof Deck: Extruded aluminum shapes, interlocking self-flashing sections. Shop fabricate to lengths and panel widths required for field assembly. Depth of sections to comply with structural requirements. Provide shop induced camber in deck units with spans greater than 16'-0" to offset dead load deflections. Internal dams are to be used at non-draining ends of deck.

G. Expansion joints, design structure for thermal expansion and contraction. Provide expansion joints as required.

H. Exposed rivets used to fasten bottom of fascia to deck to have finish to match fascia.

I. Apply a shop applied dip-coat of clear acrylic enamel to each column end terminating in concrete to insulate from electrolytic reaction. Column ends shall be pierced to "key" grout to bent for maximum uplift protection.

PART 3 EXECUTION

3.01 DELIVERY, STORAGE AND HANDLING:

A. Deliver, store and handle covered walkway system components as recommended by manufacturer. Handle and store in a manner to avoid deforming members and to avoid excessive stresses.

3.02 EXAMINATION

A. Examine adjacent work for conditions that would prevent quality installation of system.

B. Do not proceed until defects are corrected.

3.03 CONCRETE FOOTINGS

A. Concrete footings are not work of this section. Refer to "concrete work", Section 03310.

B. Sleeves (styrofoam blockouts) shall be furnished by walkway cover manufacturer and placed by general contractor.

3.04 FIELD DIMENSIONS

A. General contractor shall field confirm bent locations, dimensions and elevations shown on shop drawings prior to fabrication.

3.05 INSTALLATION

A. Erection: Set roof support frames (bents) into pockets provided in top of footings; set to required elevations, align, plumb, and level; and grout in place with 2,000 p.s.i. portland cement grout. Assure that grout fills all voids and “keys” to columns. Fill downspout units with grout to bottom of discharge level. Install aluminum deflectors after grouting. Follow manufacturer’s instructions. Match to finish and elevation of adjacent sidewalks.

B. Install roof deck sections, accessories and related flashing in accordance with manufacturer’s instructions. Provide roof slope for rain drainage without ponding water. Align and anchor roof deck units to structural support frames.

C. Assemble all components in a neat, workmanlike manner.

3.06 FLASHING

A. Flashings: Flashing required between covered walkway system and sheet metal adjoining structures are not work of this section. Refer to “Flashing and Trim”, Section 07620.

3.07 CLEANING AND PROTECTION

A. Damaged Units: Replace roof deck panels and other components of the work which have been damaged or have deteriorated beyond successful minor repair.

B. Cleaning: Remove protective coverings at time in project construction sequence which will afford greatest protection of work. Clean finished surfaces as recommended by manufacturer. Maintain in a clean condition during construction.

C. Protection: Advise Contractor of protection and surveillance procedures, as required to ensure that work of this section will be without damage or deterioration at time of substantial completion.

END OF SECTION 10730

SECTION 10801 - TOILET AND BATH ACCESSORIES

PART 1 - GENERAL

RELATED DOCUMENTS

Drawings and general provisions of the Contract, including General and Supplementary Conditions and Division 1 Specification Sections, apply to this Section.

SUMMARY

This Section includes the following:

Toilet and bath accessories.

Related Sections include the following:

Division 10 Section "Toilet Partitions" for compartments and screens.

SUBMITTALS

Product Data: Include construction details, material descriptions and thicknesses, dimensions, profiles, fastening and mounting methods, specified options, and finishes for each type of accessory specified.

Samples: For each accessory item to verify design, operation, and finish requirements.

Approved full-size Samples will be returned and may be used in the Work.

Setting Drawings: For cutouts required in other work; include templates, substrate preparation instructions, and directions for preparing cutouts and installing anchoring devices.

Product Schedule: Indicating types, quantities, sizes, and installation locations by room of each accessory required. Use designations indicated in the Toilet and Bath Accessory Schedule and room designations indicated on Drawings in product schedule.

Maintenance Data: For accessories to include in maintenance manuals specified in Division 1. Provide lists of replacement parts and service recommendations.

QUALITY ASSURANCE

Source Limitations: Provide products of same manufacturer for each type of accessory unit and for units exposed to view in same areas, unless otherwise approved by Architect.

Product Options: Accessory requirements, including those for materials, finishes, dimensions, capacities, and performance, are established by specific products indicated in the Toilet and Bath Accessory Schedule.

Products of other manufacturers with equal characteristics, as judged solely by Architect, may

be provided.

Products of other manufacturers listed in Part 2 with equal characteristics, as judged solely by Architect, may be provided.

Other manufacturers' products with equal characteristics may be considered. See Division 1 Section "Substitutions."

Do not modify aesthetic effects, as judged solely by Architect, except with Architect's approval. Where modifications are proposed, submit comprehensive explanatory data to Architect for review.

COORDINATION

Coordinate accessory locations with other work to prevent interference with clearances required for access by disabled persons, proper installation, adjustment, operation, cleaning, and servicing of accessories.

Deliver inserts and anchoring devices set into concrete or masonry as required to prevent delaying the Work.

WARRANTY

General Warranty: Special warranty specified in this Article shall not deprive Owner of other rights Owner may have under other provisions of the Contract Documents and shall be in addition to, and run concurrent with, other warranties made by Contractor under requirements of the Contract Documents.

Manufacturer's Mirror Warranty: Written warranty, executed by mirror manufacturer agreeing to replace mirrors that develop visible silver spoilage defects within minimum warranty period indicated.

Minimum Warranty Period: 15 years from date of Substantial Completion.

PART 2 - PRODUCTS

MANUFACTURERS

Available Manufacturers: Subject to compliance with requirements, manufacturers offering accessories that may be incorporated into the Work include, but are not limited to, the following:

Toilet and Bath Accessories:

American Specialties, Inc.
Bobrick Washroom Equipment, Inc.
Bradley Corporation.

Available Products: Subject to compliance with requirements, products that may be incorporated into the Work include, but are not limited to, those indicated in the Toilet and Bath Accessory

Schedule at the end of Part 3.

Products: Subject to compliance with requirements, provide one of the products indicated for each designation in the Toilet and Bath Accessory Schedule at the end of Part 3.

MATERIALS

Stainless Steel: ASTM A 666, Type 304, with No. 4 finish (satin), in 0.0312-inch (0.8-mm) minimum nominal thickness, unless otherwise indicated.

Mirror Glass: ASTM C 1036, Type I, Class 1, Quality q2, nominal 6.0 mm thick, with silvering, electroplated copper coating, and protective organic coating complying with FS DD-M-411.

Galvanized Steel Mounting Devices: ASTM A 153/A 153M, hot-dip galvanized after fabrication.

Fasteners: Screws, bolts, and other devices of same material as accessory unit, tamper and theft resistant when exposed, and of galvanized steel when concealed.

FABRICATION

General: Names or labels are not permitted on exposed faces of accessories. On interior surface not exposed to view or on back surface of each accessory, provide printed, waterproof label or stamped nameplate indicating manufacturer's name and product model number.

Surface-Mounted Toilet Accessories: Unless otherwise indicated, fabricate units with tight seams and joints, and exposed edges rolled. Hang doors and access panels with continuous stainless-steel hinge. Provide concealed anchorage where possible.

Framed Glass-Mirror Units: Fabricate frames for glass-mirror units to accommodate glass edge protection material. Provide mirror backing and support system that permits rigid, tamper-resistant glass installation and prevents moisture accumulation.

Provide galvanized steel backing sheet, not less than 0.034 inch (0.85 mm) and full mirror size, with nonabsorptive filler material. Corrugated cardboard is not an acceptable filler material.

Mirror-Unit Hangers: Provide mirror-unit mounting system that permits rigid, tamper- and theft-resistant installation, as follows:

One-piece, galvanized steel, wall-hanger device with spring-action locking mechanism to hold mirror unit in position with no exposed screws or bolts.

PART 3 - EXECUTION

INSTALLATION

Install accessories according to manufacturers' written instructions, using fasteners appropriate to substrate indicated and recommended by unit manufacturer. Install units level, plumb, and firmly anchored in locations and at heights indicated.

Secure mirrors to walls in concealed, tamper-resistant manner with special hangers, toggle bolts, or screws. Set units level, plumb, and square at locations indicated, according to manufacturer's written instructions for substrate indicated.

Install grab bars to withstand a downward load of at least 250 lbf (1112 N), when tested according to method in ASTM F 446.

ADJUSTING AND CLEANING

Adjust accessories for unencumbered, smooth operation and verify that mechanisms function properly. Replace damaged or defective items.

Remove temporary labels and protective coatings.

Clean and polish exposed surfaces according to manufacturer's written recommendations.

TOILET AND BATH ACCESSORY SCHEDULE

Refer to Sheet A7.1.

END OF SECTION 10801

SECTION 22 05 00 - COMMON WORK RESULTS FOR PLUMBING

PART 1 GENERAL

1.1 RELATED DOCUMENTS

A. Drawings and general provisions of the Contract, including General and Supplementary Conditions and Division 01 Specification Sections, apply to this Section.

B. Applicable provisions of this Section apply to all sections of Division 22, Plumbing.

1.2 CONTRACT DOCUMENTS

A. Examine all drawings and specifications carefully before submitting a bid. Architectural drawings take precedence over mechanical or electrical drawings with reference to building construction. If discrepancies or conflicts occur between drawings, or between drawings and specifications, notify the Engineer in writing prior to bid date; however, the most stringent requirement shall govern.

B. For purposes of clearness and legibility, drawings are essentially diagrammatic and, although size and location of equipment are drawn to scale wherever possible, Contractor shall make use of all data in all of the contract documents and shall verify this information at the building site.

C. The drawings indicate required size and points of termination of pipes, conduits and ducts and suggest proper routes to conform to structure avoid obstructions and preserve clearances. However, it is not intended that drawings indicate all necessary offsets, and it shall be the responsibility of the Contractor to make the installation in such a manner as to conform to structure, avoid obstructions, preserve headroom and keep openings and passageways clear, without further instructions or cost to the Owner.

D. Furnish, install and/or connect with appropriate services all items shown on any drawing without additional compensation.

E. Consider the terms "provide" and "install" as synonymous with "furnish and install".

1.3 CODE REQUIREMENTS

A. Perform work in accordance with the following codes and any applicable statutes, ordinances, codes, and regulations of governmental authorities having jurisdiction.

1. ASHRAE:
   a. Standard 90.1 – Energy Standard for Buildings Except Low Rise Residential Buildings
2. Occupational Safety and Health Regulations (OSHA)
3. National Fire Protection Association (NFPA):
   a. NFPA 1 – Uniform Fire Code
   b. NFPA 54 – National Fuel Gas Code

c. NFPA 70 – National Electrical Code

d. NFPA 101 – Life Safety Code

4. Florida Building Code 2010 Edition:

a. Accessibility Code

b. Energy Conservation Code

c. Fuel Gas Code

d. Mechanical Code

e. Plumbing Code

5. Florida Administrative Code

a. Chapter 61G15-34 Responsibility Rules of Professional Engineers Concerning the Design of Mechanical Systems

b. Chapter 69A-3 Fire Prevention – General Provisions

c. Chapter 69A-47 Uniform Fire Safety Standards for Elevators

d. Chapter 69A-53 Uniform Fire Safety Standards for Hospitals and Nursing Homes

e. Chapter 69A-60 The Florida Fire Prevention Code

6. ADA Accessibility Guidelines for Buildings (ADAAG)

B. Resolve, in writing, any code violation discovered in contract documents with the Engineer prior to bidding. After award of the contract, make any correction or addition necessary for compliance with applicable codes at no additional cost to Owner.

C. The installer shall include in the work, without extra cost to the Owner, any labor, materials, services, apparatus and drawings required to comply with all applicable laws, ordinances, rules and regulations.

1.4 REFERENCE SPECIFICATIONS AND STANDARDS

A. Materials which are specified by reference to Federal Specifications; ASTM, ASME, ANSI, or AWWA Specifications; Federal Standards; or other standard specifications must comply with latest editions, revisions, amendments or supplements in effect on date bids are received. Specifications and standards are minimum requirements for all equipment, material and work. In instances where capacities, size or other feature of equipment, devices or materials exceed these minimums, meet listed or shown capacities.

B. Whenever a reference is made to a standard, installation and materials shall comply with the latest published edition of the standard at the time project is bid unless otherwise specified herein.

1.5 QUALITY ASSURANCE

A. The intent of the Division 22 specifications and the accompanying drawings is to provide a complete, operable, and satisfactory plumbing system as shown, specified, and required by

applicable codes. Include all work specified in Division 22 and shown on the accompanying drawings.

B. The drawings that accompany the Division 22 specifications are diagrammatic. They do not show every offset, bend, tee, or elbow which may be required to install work in the space provided and avoid conflicts. Follow the drawings as closely as is practical to do so and install additional bends, offsets and elbows where required by local conditions from measurements taken at the building, subject to approval, and without additional cost to the contract.

C. Coordinate exact requirements governed by actual job conditions. Check all information and report any discrepancies before fabricating work. Report changes in time to avoid unnecessary work.

D. Systems shall be built and installed to deliver their full rated capacity at the efficiency for which they were designed.

E. The entire plumbing system shall operate at full capacity without objectionable noise or vibration.

F. Materials and Equipment:

1. Furnish new and unused materials and equipment. Work shall be of good quality, free of faults and defects.
2. All equipment shall fit in the space provided.
3. Each piece of equipment provided shall meet all detailed requirements of the drawings and specifications and shall be suitable for the installation shown.
4. Where two or more units of the same class of equipment are provided, use products of the same manufacturer; component parts of the entire system need not be products of the same manufacturer.
5. Manufacturer's model names and numbers used in these drawings and specifications are subject to change per manufacturer's action. Contractor shall therefore verify model names and numbers with manufacturer's representative before ordering any product or equipment.

G. Workmanship:

1. Install all materials in a neat and workmanlike manner.
2. Follow manufacturer’s directions. If they are in conflict with the contract documents, obtain clarification before starting work.

H. Cutting and Patching:

1. Cutting, patching and repairing for the proper installation and completion of the work specified in this division, including plastering, masonry work, concrete work, carpentry work, firestopping, and painting, shall be performed by skilled craftsmen of each respective trade in conformance with the appropriate division of work. Additional openings required in building construction shall be made by drilling or cutting.
2. Fill holes which are cut oversize so that a tight fit is obtained around the objects passing through.

3. Do not pierce beams or columns without permission of the Port and then only as directed.

4. New or existing work that is cut or damaged shall be restored to its original condition. Where alterations disturb existing finishes, the surfaces shall be repaired, refinished and left in condition existing prior to commencement of work.

1.6 SUBMITTALS

A. Submittals: Product Data. Submit in accordance with project contract documents.

B. If not specified in the project contract documents, then submit either a minimum of five hard copies in 3-ring binders or electronic PDFs, as required by the Engineer.

C. All submittals shall include adequate descriptive literature, catalog cuts, shop drawings and other data necessary for the Engineer to ascertain that the proposed equipment and materials comply with specification requirements. Catalog cuts submitted for approval shall be legible and clearly identify equipment being submitted.

D. Submit Product Data for review on all scheduled pieces of equipment, equipment requiring electrical connections or connections by other trades, and as required by the contract documents. Include manufacturer's detailed shop drawings, specifications, and data sheets. Data sheets shall include capacities, RPM, BHP, pressure drop, design and operating pressures, temperatures and similar data. Manufacturer's abbreviations or codes are not acceptable.

1.7 PERMITS, FEES, AND INSPECTIONS

A. Obtain and pay for all permits, fees, tap fees, connection charges, demand charges, systems charges, impact fees and inspections.

B. Deliver all certificates of inspection issued by authorities having jurisdiction to the Engineer.

1.8 WARRANTY

A. Warranty work and equipment for one year from the date of final acceptance of the project. During the warranty period provide labor and materials to make good any faults or imperfections that may arise due to defects or omissions in materials or workmanship.

PART 2 PRODUCTS

2.1 SLEEVES

A. Mechanical Sleeve Seals: Modular rubber sealing element unit, designed for field assembly, to fill annular space between pipe and sleeve.

B. Galvanized-Steel Sheet: 0.0239-inch (0.6-mm) minimum thickness; round tube closed with welded longitudinal joint.

C. Steel Pipe: ASTM A 53, Type E, Grade B, Schedule 40, galvanized, plain ends.

D. PVC Pipe: ASTM D 1785, Schedule 40.

2.2 GROUT

A. Description: ASTM C 1107, Grade B, nonshrink and nonmetallic, dry hydraulic-cement grout.

2.3 MOTORS

A. Motor Characteristics:

1. Frequency Rating: 60 Hz.
2. Voltage Rating: NEMA standard voltage for circuit voltage to which motor is connected.
3. Service Factor: 1.15.
4. Duty: Continuous duty at ambient temperature of 105 degrees F (40 degrees C) and at altitude of 3300 feet (1005 m) above sea level.
5. Capacity and Torque Characteristics: Sufficient to start, accelerate, and operate connected loads at designated speeds, at installed altitude and environment, with indicated operating sequence, and without exceeding nameplate ratings or considering service factor.
6. Enclosure: Unless otherwise indicated, open dripproof.
7. Motors Used with Variable-Frequency Controllers: Ratings, characteristics, and features coordinated with and approved by controller manufacturer.

2.4 HANGERS AND SUPPORTS

A. Hanger and Pipe Attachments: Factory fabricated with galvanized coatings; nonmetallic coated for hangers in direct contact with copper tubing.

B. Powder-Actuated Fasteners: Threaded-steel stud, with pull-out and shear capacities appropriate for supported loads and building materials where used.

C. Mechanical-Expansion Anchors: Insert-wedge-type, stainless steel, with pull-out and shear capacities appropriate for supported loads and building materials where used.

2.5 VIBRATION ISOLATION CONTROL DEVICES

A. Vibration Supports:

1. Elastomeric Isolation Pads: Arranged in single or multiple layers of oil- and water-resistant, of sufficient stiffness for uniform loading over pad area, molded with a non-slip pattern and galvanized-steel baseplates, and factory cut to sizes that match supported equipment.

   a. <u>Basis-of-Design Product</u>: Subject to compliance with requirements, provide Mason Industries, Inc., Super W; or comparable product by one of the following:

      1. <u>Kinetics Noise Control, Inc</u>.

2. Vibration Mountings & Controls, Inc.

2. Elastomeric Isolation Mounts: Double-deflection type, with molded, oil-resistant rubber or neoprene isolator elements with factory-drilled, encapsulated top plate and baseplate. Provide isolator with minimum 0.5-inch (13-mm) static deflection.

a. Basis-of-Design Product: Subject to compliance with requirements, provide Mason Industries, Inc., Type ND; or comparable product by one of the following:

1. Kinetics Noise Control, Inc.
2. Vibration Mountings & Controls, Inc.

3. Open-Spring Isolators: Freestanding, laterally stable, open-spring isolators. Provide isolator with minimum 1-inch (25-mm) static deflection.

a. Basis-of-Design Product: Subject to compliance with requirements, provide Mason Industries, Inc., Type SLFH; or comparable product by one of the following:

1. Kinetics Noise Control, Inc.
2. Vibration Mountings & Controls, Inc.

4. Housed-Spring Isolators: Freestanding, laterally stable, open-spring isolators in two-part telescoping housing. Provide isolator with minimum 1-inch (25-mm) static deflection.

a. Basis-of-Design Product: Subject to compliance with requirements, provide Mason Industries, Inc., Type C; or comparable product by one of the following:

1. Kinetics Noise Control, Inc.
2. Vibration Mountings & Controls, Inc.

B. Vibration Hangers:

1. Elastomeric Hangers: Double-deflection type, with molded, oil-resistant rubber or neoprene isolator elements bonded to steel housings with threaded connections for hanger rods. Provide isolator with minimum 0.5-inch (13-mm) static deflection.

a. Basis-of-Design Product: Subject to compliance with requirements, provide Mason Industries, Inc., HD; or comparable product by one of the following:

1. Kinetics Noise Control, Inc.
2. Vibration Mountings & Controls, Inc.

2. Spring Hangers: Combination coil-spring and elastomeric-insert hanger with spring and insert in compression. Provide isolator with minimum 1-inch (25-mm) static deflection.

a. Basis-of-Design Product: Subject to compliance with requirements, provide Mason Industries, Inc., HS-B; or comparable product by one of the following:

1. Kinetics Noise Control, Inc.
2. Vibration Mountings & Controls, Inc.

2.6 PRESSURE GAGES AND TEST PLUGS

A. Pressure Gages: Direct-mounting, indicating-dial type complying with ASME B40.100. Dry metal case, minimum 2-1/2-inch (63-mm) diameter with red pointer on white face, and

plastic window. Minimum accuracy 3 percent of middle half of range. Range two times operating pressure.

B. Test Plug: Corrosion-resistant brass or stainless-steel body with two self-sealing rubber core inserts and gasketed and threaded cap, with extended stem for units to be installed in insulated piping. Minimum pressure and temperature rating 500 psig at 200 degrees F (3450 kPa at 93 degrees C).

PART 3 EXECUTION

3.1 INSTALLATIONS

A. Install materials and equipment in a professional manner. The Engineer may direct replacement of items which, in his opinion, do not present a professional appearance. Replace or reinstall items at the expense of the Contractor.

B. Obstructions

1. The drawings indicate certain information pertaining to surface and subsurface obstructions which has been taken from available drawings. Such information is not guaranteed, however, as to accuracy of location or complete information.
2. Before any cutting or trenching operations are begun, verify with Owner's representative, utility companies, municipalities, and other interested parties that all available information has been provided. Verify locations given.
3. Should obstruction be encountered, whether shown or not, alter routing of new work, reroute existing lines, remove obstruction where permitted, or otherwise perform whatever work is necessary to satisfy the purpose of the new work and leave existing services and structures in a satisfactory and serviceable condition.
4. Assume total responsibility for and repair any damage to existing utilities or construction, whether or not such existing facilities are shown.

C. Where "rated" walls, floor, roofs and ceilings are penetrated or cut to install equipment, materials, devices, etc. the Contractor shall provide and install all materials required to re-establish the rating of the wall, floor, roof or ceiling to the satisfaction of the authority having jurisdiction.

D. Space Requirements: Consider space limitations imposed by contiguous work in selection and location of equipment and material. Do not provide equipment or material which is not suitable in this respect.

E. Select equipment to operate with minimum noise and vibration. If objectionable noise or vibration is produced or transmitted to or through the building structure by equipment, piping, ducts or other parts of work, rectify such conditions without cost to the Owner.

F. Wiring Method: Install cables in raceways and cable trays except low voltage network cable above accessible ceilings. Conceal raceway and cables except in unfinished spaces.

1. Install plenum cable in environmental air spaces, including plenum ceilings.

2. Comply with requirements for raceways and boxes specified in Division 26 Section "Raceways and Boxes for Electrical Systems."

G. Wiring within Enclosures: Bundle, lace, and train conductors to terminal points with no excess and without exceeding manufacturer's limitations on bending radii. Install lacing bars and distribution spools.

3.2 MOTOR INSTALLATION

A. Anchor motor assembly to base, adjustable rails, or other support, arranged and sized according to manufacturer's written instructions.

3.3 GENERAL PIPING INSTALLATIONS

A. Install piping free of sags and bends.

B. Install fittings for changes in direction and branch connections.

C. Install sleeves for pipes passing through concrete and masonry walls and concrete floor and roof slabs.

D. Exterior Wall, Pipe Penetrations: Mechanical sleeve seals installed in steel or cast-iron pipes for wall sleeves.

E. Comply with requirements in Division 07 Section "Penetration Firestopping" for sealing pipe penetrations in fire-rated construction.

F. Install unions at final connection to each piece of equipment.

G. Install dielectric unions and flanges to connect piping materials of dissimilar metals in gas piping.

H. Install dielectric coupling and nipple fittings to connect piping materials of dissimilar metals in water piping.

3.4 GENERAL EQUIPMENT INSTALLATIONS

A. Install equipment to allow maximum possible headroom unless specific mounting heights are not indicated.

B. Install equipment level and plumb, parallel and perpendicular to other building systems and components, unless otherwise indicated.

C. Install mechanical equipment to facilitate service, maintenance, and repair or replacement of components. Connect equipment for ease of disconnecting, with minimum interference to other installations. Extend grease fittings to accessible locations.

D. Install equipment to allow right of way for piping installed at required slope.

3.5 BASES, SUPPORTS, AND ANCHORAGES

A. Anchor equipment to concrete base according to equipment manufacturer's written instructions and according to seismic codes at Project.

1. Construct concrete bases of dimensions indicated, but not less than 4 inches (100 mm) larger in both directions than supported unit.
2. Install dowel rods on 18-inch (450-mm) centers around the full perimeter of the base to connect concrete base to concrete floor.
3. Install epoxy-coated anchor bolts for supported equipment that extend through concrete base, and anchor into structural concrete floor.
4. Place and secure anchorage devices. Use supported equipment manufacturer's setting drawings, templates, diagrams, instructions, and directions furnished with items to be embedded.
5. Use 3000-psi (20.7-MPa), 28-day compressive-strength concrete and reinforcement as specified in Division 03 Section "Cast-in-Place Concrete"

B. Mix and install grout for fire-suppression equipment base bearing surfaces, pump and other equipment base plates, and anchors. Place grout, completely filling equipment bases.

3.6 HANGERS AND SUPPORTS

A. Comply with MSS SP-69 and MSS SP-89. Install building attachments within concrete or to structural steel.

B. Install hangers and supports to allow controlled thermal and seismic movement of piping systems.

C. Install powder-actuated fasteners and mechanical-expansion anchors in concrete after concrete is cured. Do not use in lightweight concrete or in slabs less than 4 inches (100 mm) thick.

D. Load Distribution: Install hangers and supports so piping live and dead loading and stresses from movement will not be transmitted to connected equipment.

E. Horizontal-Piping Hangers and Supports: Unless otherwise indicated and except as specified in piping system Specification Sections, install the following types:

1. Adjustable Steel Clevis Hangers (MSS Type 1): For suspension of noninsulated or insulated stationary pipes, NPS 1/2 to NPS 30 (DN 15 to DN 750).
2. Pipe Hangers (MSS Type 5): For suspension of pipes, NPS 1/2 to NPS 4 (DN 15 to DN 100), to allow off-center closure for hanger installation before pipe erection.
3. Adjustable Steel Band Hangers (MSS Type 7): For suspension of noninsulated stationary pipes, NPS 1/2 to NPS 8 (DN 15 to DN 200).
4. Adjustable Band Hangers (MSS Type 9): For suspension of noninsulated stationary pipes, NPS 1/2 to NPS 8 (DN 15 to DN 200).
5. Adjustable Swivel-Ring Band Hangers (MSS Type 10): For suspension of noninsulated stationary pipes, NPS 1/2 to NPS 2 (DN 15 to DN 50).

F. Vertical-Piping Clamps: Unless otherwise indicated and except as specified in piping system Specification Sections, install the following types:

1. Extension Pipe or Riser Clamps (MSS Type 8): For support of pipe risers, NPS 3/4 to NPS 20 (DN 20 to DN 500).

2. Carbon- or Alloy-Steel Riser Clamps (MSS Type 42): For support of pipe risers, NPS 3/4 to NPS 20 (DN 20 to DN 500), if longer ends are required for riser clamps.

3.7 VIBRATION ISOLATION CONTROL DEVICE INSTALLATION

A. Adjust vibration isolators to allow free movement of equipment limited by restraints.

B. Install resilient bolt isolation washers and bushings on equipment anchor bolts.

C. Install cables so they do not bend across sharp edges of adjacent equipment or building structure.

3.8 FIELD QUALITY CONTROL

A. Tests:

1. Include all tests specified and/or required under laws, rules and regulations of all departments having jurisdiction. Tests shall also be performed as indicated herein and other sections of the specifications.

2. After all mechanical systems have been completed and put into operation, subject each system to an operating test under design conditions to insure proper sequence and operation throughout the range of operation. Make adjustments as required to insure proper functioning of all systems.

3. All parts of the work and associated equipment shall be tested and adjusted to work properly and be left in perfect operating condition.

4. Correct defects disclosed by these tests without any additional cost to the Owner. Repeat tests on repaired or replaced work.

5. Maintain a log of all tests being conducted and have it available for review by the Engineer. Log to indicate date, type of tests, duration, and defects noted and when corrected.

6. Special tests on individual systems are specified under individual sections.

7. Mechanical Contractor shall provide personnel, tools and equipment and assist the Test and Balance Contractor in making any adjustments necessary to meet the test and balance requirements.

END OF SECTION 220500

SECTION 22 05 23 - GENERAL-DUTY VALVES FOR PLUMBING PIPING

PART 1 - GENERAL

1.1 RELATED DOCUMENTS

A. Drawings and general provisions of the Contract, including General and Supplementary Conditions and Division 01 Specification Sections, apply to this Section.

1.2 SUMMARY

A. Section Includes:

1. Bronze angle valves.
2. Bronze ball valves.
3. Iron, single-flange butterfly valves.
4. Bronze swing check valves.
5. Iron swing check valves.
6. Iron, grooved-end swing check valves.
7. Iron, center-guided check valves.
8. Iron gate valves.
9. Bronze globe valves.
10. Iron globe valves.

1.3 DEFINITIONS

A. CWP: Cold working pressure.

B. EPDM: Ethylene propylene copolymer rubber.

C. NBR: Acrylonitrile-butadiene, Buna-N, or nitrile rubber.

D. NRS: Nonrising stem.

E. OS&Y: Outside screw and yoke.

F. RS: Rising stem.

G. SWP: Steam working pressure.

1.4 SUBMITTALS

A. Product Data: For each type of valve indicated.

1.5 QUALITY ASSURANCE

A. Source Limitations for Valves: Obtain each type of valve from single source from single manufacturer.

B. ASME Compliance:

1. ASME B16.10 and ASME B16.34 for ferrous valve dimensions and design criteria.
2. ASME B31.1 for power piping valves.
3. ASME B31.9 for building services piping valves.

C. NSF Compliance: NSF 61 for valve materials for potable-water service.

1.6 DELIVERY, STORAGE, AND HANDLING

A. Prepare valves for shipping as follows:

1. Protect internal parts against rust and corrosion.
2. Protect threads, flange faces, grooves, and weld ends.
3. Set angle, gate, and globe valves closed to prevent rattling.
4. Set ball and plug valves open to minimize exposure of functional surfaces.
5. Set butterfly valves closed or slightly open.
6. Block check valves in either closed or open position.

B. Use the following precautions during storage:

1. Maintain valve end protection.
2. Store valves indoors and maintain at higher than ambient dew point temperature. If outdoor storage is necessary, store valves off the ground in watertight enclosures.

C. Use sling to handle large valves; rig sling to avoid damage to exposed parts. Do not use handwheels or stems as lifting or rigging points.

PART 2 - PRODUCTS

2.1 GENERAL REQUIREMENTS FOR VALVES

A. Refer to valve schedule articles for applications of valves.

B. Valve Pressure and Temperature Ratings: Not less than indicated and as required for system pressures and temperatures.

C. Valve Sizes: Same as upstream piping unless otherwise indicated.

D. Valve Actuator Types:

1. Gear Actuator: For quarter-turn valves NPS 8 (DN 200) and larger.
2. Handwheel: For valves other than quarter-turn types.
3. Handlever: For quarter-turn valves NPS 6 (DN 150) and smaller.

E. Valves in Insulated Piping: With 2-inch (50-mm) stem extensions and the following features:

1. Gate Valves: With rising stem.
2. Ball Valves: With extended operating handle of non-thermal-conductive material, and protective sleeve that allows operation of valve without breaking the vapor seal or disturbing insulation.
3. Butterfly Valves: With extended neck.

F. Valve-End Connections:

1. Flanged: With flanges according to ASME B16.1 for iron valves.
2. Grooved: With grooves according to AWWA C606.
3. Solder Joint: With sockets according to ASME B16.18.
4. Threaded: With threads according to ASME B1.20.1.

G. Valve Bypass and Drain Connections: MSS SP-45.

2.2 BRONZE ANGLE VALVES

A. Class 150, Bronze Angle Valves with Nonmetallic Disc:

1. Manufacturers: Subject to compliance with requirements, provide products by one of the following:

   a. Hammond Valve.
   b. Milwaukee Valve Company.
   c. NIBCO INC.
   d. Or equal.

2. Description:

   a. Standard: MSS SP-80, Type 2.
   b. CWP Rating: 300 psig (2070 kPa).
   c. Body Material: ASTM B 62, bronze with integral seat and union-ring bonnet.
   d. Ends: Threaded.
   e. Stem: Bronze.
   f. Disc: PTFE or TFE.
   g. Packing: Asbestos free.
   h. Handwheel: Malleable iron.

2.3 BRONZE BALL VALVES

A. Two-Piece, Full-Port, Bronze Ball Valves with Stainless-Steel Trim:

1. Manufacturers: Subject to compliance with requirements, provide products by one of the following:

   a. Conbraco Industries, Inc.; Apollo Valves.
   b. Milwaukee Valve Company.
   c. NIBCO INC.
   d. Watts Regulator Co.; a division of Watts Water Technologies, Inc.

e. Or equal.

2. Description:

a. Standard: MSS SP-110.
b. SWP Rating: 150 psig (1035 kPa).
c. CWP Rating: 600 psig (4140 kPa).
d. Body Design: Two piece.
e. Body Material: Bronze.
f. Ends: Threaded.
g. Seats: PTFE or TFE.
h. Stem: Stainless steel.
i. Ball: Stainless steel, vented.
j. Port: Full.

2.4 IRON, SINGLE-FLANGE BUTTERFLY VALVES

A. 200 CWP, Iron, Single-Flange Butterfly Valves with EPDM Seat and Aluminum-Bronze Disc:

1. Manufacturers: Subject to compliance with requirements, provide products by one of the following:
a. Milwaukee Valve Company.
b. NIBCO INC.
c. Watts Regulator Co.; a division of Watts Water Technologies, Inc.
d. Or equal.

2. Description:

a. Standard: MSS SP-67, Type I.
b. CWP Rating: 200 psig (1380 kPa).
c. Body Design: Lug type; suitable for bidirectional dead-end service at rated pressure without use of downstream flange.
d. Body Material: ASTM A 126, cast iron or ASTM A 536, ductile iron.
e. Seat: EPDM.
f. Stem: One- or two-piece stainless steel.
g. Disc: Aluminum bronze.

2.5 IRON, GROOVED-END BUTTERFLY VALVES

A. 175 CWP, Iron, Grooved-End Butterfly Valves:

1. Manufacturers: Subject to compliance with requirements, provide products by one of the following:

a. Shurjoint Piping Products.
b. Tyco Fire Products LP; Grinnell Mechanical Products.
c. Victaulic Company.
d. Or equal.

2. Description:

a. Standard: MSS SP-67, Type I.
b. CWP Rating: 175 psig (1200 kPa).
c. Body Material: Coated, ductile iron.
d. Stem: Two-piece stainless steel.
e. Disc: Coated, ductile iron.
f. Seal: EPDM.

B. 300 CWP, Iron, Grooved-End Butterfly Valves:

1. Manufacturers: Subject to compliance with requirements, provide products by one of the following:

a. Mueller Steam Specialty; a division of SPX Corporation.
b. NIBCO INC.
c. Shurjoint Piping Products.
d. Tyco Fire Products LP; Grinnell Mechanical Products.
e. Victaulic Company.
f. Or equal.

2. Description:

a. Standard: MSS SP-67, Type I.
b. NPS 8 (DN 200) and Smaller CWP Rating: 300 psig (2070 kPa).
c. NPS 10 (DN 250) and Larger CWP Rating: 200 psig (1380 kPa).
d. Body Material: Coated, ductile iron.
e. Stem: Two-piece stainless steel.
f. Disc: Coated, ductile iron.
g. Seal: EPDM.

2.6 BRONZE SWING CHECK VALVES

A. Class 150, Bronze Swing Check Valves with Nonmetallic Disc:

1. Manufacturers: Subject to compliance with requirements, provide products by one of the following:

a. Milwaukee Valve Company.
b. NIBCO INC.
c. Watts Regulator Co.; a division of Watts Water Technologies, Inc.
d. Or equal.

2. Description:

a. Standard: MSS SP-80, Type 4.
b. CWP Rating: 300 psig (2070 kPa).
c. Body Design: Horizontal flow.
d. Body Material: ASTM B 62, bronze.
e. Ends: Threaded.
f. Disc: PTFE or TFE.

2.7 IRON SWING CHECK VALVES

A. Class 125, Iron Swing Check Valves with Metal Seats:

1. Manufacturers: Subject to compliance with requirements, provide products by one of the following:
   a. Milwaukee Valve Company.
   b. NIBCO INC.
   c. Watts Regulator Co.; a division of Watts Water Technologies, Inc.
   d. Or equal.

2. Description:

   a. Standard: MSS SP-71, Type I.
   b. CWP Rating: 200 psig (1380 kPa).
   c. Body Design: Clear or full waterway.
   d. Body Material: ASTM A 126, gray iron with bolted bonnet.
   e. Ends: Flanged.
   f. Trim: Bronze.
   g. Gasket: Asbestos free.

2.8 IRON, GROOVED-END SWING CHECK VALVES

A. 300 CWP, Iron, Grooved-End Swing Check Valves:

1. Manufacturers: Subject to compliance with requirements, provide products by one of the following:

   a. Shurjoint Piping Products.
   b. Tyco Fire Products LP; Grinnell Mechanical Products.
   c. Victaulic Company.
   d. Or equal.

2. Description:

   a. CWP Rating: 300 psig (2070 kPa).
   b. Body Material: ASTM A 536, ductile iron.
   c. Seal: EPDM.
   d. Disc: Spring-operated, ductile iron or stainless steel.

2.9 IRON, CENTER-GUIDED CHECK VALVES

A. Class 125, Iron, Globe, Center-Guided Check Valves with Metal Seat:

1. Manufacturers: Subject to compliance with requirements, provide products by one of the following:

   a. Milwaukee Valve Company.
   b. Mueller Steam Specialty; a division of SPX Corporation.
   c. NIBCO INC.
   d. Watts Regulator Co.; a division of Watts Water Technologies, Inc.

e. Or equal.

2. Description:

a. Standard: MSS SP-125.
b. CWP Rating: 200 psig (1380 kPa).
c. Body Material: ASTM A 126, gray iron.
d. Style: Globe, spring loaded.
e. Ends: Flanged.
f. Seat: Bronze.

2.10 IRON GATE VALVES

A. Class 125, OS&Y, Iron Gate Valves:

1. Manufacturers: Subject to compliance with requirements, provide products by one of the following:

a. Milwaukee Valve Company.
b. NIBCO INC.
c. Watts Regulator Co.; a division of Watts Water Technologies, Inc.
d. Or equal.

2. Description:

a. Standard: MSS SP-70, Type I.
b. CWP Rating: 200 psig (1380 kPa).
c. Body Material: ASTM A 126, gray iron with bolted bonnet.
d. Ends: Flanged.
e. Trim: Bronze.
f. Disc: Solid wedge.
g. Packing and Gasket: Asbestos free.

2.11 BRONZE GLOBE VALVES

A. Class 150, Bronze Globe Valves with Nonmetallic Disc:

1. Manufacturers: Subject to compliance with requirements, provide products by one of the following:

a. Milwaukee Valve Company.
b. NIBCO INC.
c. Watts Regulator Co.; a division of Watts Water Technologies, Inc.
d. Or equal.

2. Description:

a. Standard: MSS SP-80, Type 2.
b. CWP Rating: 300 psig (2070 kPa).
c. Body Material: ASTM B 62, bronze with integral seat and union-ring bonnet.
d. Ends: Threaded.

e. Stem: Bronze.
f. Disc: PTFE or TFE.
g. Packing: Asbestos free.
h. Handwheel: Malleable iron.

2.12 IRON GLOBE VALVES

A. Class 125, Iron Globe Valves:

1. Manufacturers: Subject to compliance with requirements, provide products by one of the following:

a. Milwaukee Valve Company.
b. NIBCO INC.
c. Watts Regulator Co.; a division of Watts Water Technologies, Inc.
d. Or equal.

2. Description:

a. Standard: MSS SP-85, Type I.
b. CWP Rating: 200 psig (1380 kPa).
c. Body Material: ASTM A 126, gray iron with bolted bonnet.
d. Ends: Flanged.
e. Trim: Bronze.
f. Packing and Gasket: Asbestos free.

PART 3 - EXECUTION

3.1 EXAMINATION

A. Examine valve interior for cleanliness free of foreign matter and for signs of corrosion.

B. Remove special packing material to allow proper functioning of valve.

C. Operate valves in fully-open and fully-dead position and examine guides and seats.

D. Examine valve threads and mating piping for form and cleanliness.

E. Examine mating flange faces for condition that might cause leakage. Verify gasket is proper size, material, suitable for usage and free from defects.

3.2 INSTALLATION

A. Install valves with unions or flanges at each piece of equipment arranged to allow service, maintenance, and equipment removal without system shutdown.

B. Locate valves for easy access and provide separate support where necessary.

C. Install valves in horizontal piping with stem at or above center of pipe.

D. Install valves in position to allow full stem movement.

E. Install check valves for proper direction of flow and as follows:

1. Swing Check Valves: In horizontal position with hinge pin level.
2. Center-Guided Check Valves: In horizontal or vertical position, between flanges.

3.3 ADJUSTING

A. Adjust or replace valve packing after piping systems have been tested and put into service but before final adjusting and balancing. Replace valves if persistent leaking occurs.

3.4 GENERAL REQUIREMENTS FOR VALVE APPLICATIONS

A. If valve applications are not indicated, use the following:

1. Shutoff Service: Ball or butterfly valves.
2. Butterfly Valve Dead-End Service: Single-flange (lug) type.
3. Throttling Service: Globe or angle valves.
4. Pump-Discharge Check Valves:

   a. NPS 2 (DN 50) and Smaller: Bronze swing check valves with nonmetallic disc.
   b. NPS 2-1/2 (DN 65) and Larger for Domestic Water: Center-guided, metal-seat check valves.
   c. NPS 2-1/2 (DN 65) and Larger for Sanitary Waste and Storm Drainage: Iron swing check valves with lever and weight or spring.

B. If valves with specified SWP classes or CWP ratings are not available, the same types of valves with higher SWP classes or CWP ratings may be substituted.

C. Select valves, except wafer types, with the following end connections:

1. For Copper Tubing, NPS 2 (DN 50) and Smaller: Threaded ends except where solder-joint valve-end option is indicated in valve schedules below.
2. For Copper Tubing, NPS 2-1/2 to NPS 4 (DN 65 to DN 100): Flanged ends except where threaded valve-end option is indicated in valve schedules below.
3. For Copper Tubing, NPS 5 (DN 125) and Larger: Flanged ends.
4. For Steel Piping, NPS 2 (DN 50) and Smaller: Threaded ends.
5. For Steel Piping, NPS 2-1/2 to NPS 4 (DN 65 to DN 100): Flanged ends except where threaded valve-end option is indicated in valve schedules below.
6. For Steel Piping, NPS 5 (DN 125) and Larger: Flanged ends.
7. For Grooved-End Copper Tubing and Steel Piping: Valve ends may be grooved.

3.5 DOMESTIC, HOT- AND COLD-WATER VALVE SCHEDULE

A. Pipe NPS 2 (DN 50) and Smaller:

1. Bronze Valves: May be provided with solder-joint ends instead of threaded ends.
2. Bronze Angle Valves: Class 150, nonmetallic disc.
3. Ball Valves: Two piece, full port, bronze with stainless-steel trim.

4. Bronze Swing Check Valves: Class 150, nonmetallic disc.
5. Bronze Globe Valves: Class 150, nonmetallic disc.

B. Pipe NPS 2-1/2 (DN 65) and Larger:

1. Iron Valves, NPS 2-1/2 to NPS 4 (DN 65 to DN 100): May be provided with threaded ends instead of flanged ends.
2. Iron, Single-Flange Butterfly Valves: 200 CWP, EPDM seat, aluminum-bronze disc.
3. Iron, Grooved-End Butterfly Valves: 175 CWP.
4. Iron, Grooved-End Swing Check Valves: 300 CWP.
5. Iron, Center-Guided Check Valves: Class 125, globe, metal seat.
6. Iron Globe Valves: Class 125.

3.6 SANITARY-WASTE AND STORM-DRAINAGE VALVE SCHEDULE

A. Pipe NPS 2 (DN 50) and Smaller:

1. Bronze Valves: May be provided with solder-joint ends instead of threaded ends.
2. Bronze Angle Valves: Class 150, nonmetallic disc.
3. Ball Valves: Two piece, full port, bronze with stainless-steel trim.
4. Bronze Swing Check Valves: Class 150, nonmetallic disc.
5. Bronze Globe Valves: Class 150, nonmetallic disc.

B. Pipe NPS 2-1/2 (DN 65) and Larger:

1. Iron Valves, NPS 2-1/2 to NPS 4 (DN 65 to DN 100): May be provided with threaded ends instead of flanged ends.
2. Iron Swing Check Valves with Closure Control: Class 125, lever and weight.
3. Iron Gate Valves: Class 125, OS&Y.

3.7 COMPRESS AIR VALVE SCHEDULE

A. Pipe NPS 2 (DN50) and smaller:
1. Bronze and brass valves: May be provided with solder-joint ends instead of threaded ends.
2. Ball valve: Two-piece regular port, brass or bronze.
3. Bronze swing check valves: Class 150, bronze disc.

B. Pipe NPS 2 ½ (DN65) and larger:
1. Iron valves may be provided with threaded or flanged ends.
2. Iron swing check valves: Class 250 metal seats.
3. Iron gate valves. Class 250 NPS.

END OF SECTION 220523

SECTION 22 07 00 – PLUMBING INSULATION

PART 1 - GENERAL

1.1 SECTION REQUIREMENTS

A. Submittals: Product Data.

B. Quality Assurance: Labeled with maximum flame-spread index of 25 and maximum smoke-developed index of 50 according to ASTM E 84.

PART 2 - PRODUCTS

2.1 INSULATION MATERIALS

A. Foam insulation materials shall not use CFC or HCFC blowing agents in the manufacturing process.

B. Flexible Elastomeric: Closed-cell, sponge- or expanded-rubber materials. Comply with ASTM C 534, Type I for tubular materials and Type II for sheet materials. The most common jacket for equipment applications is ASJ.

C. Mineral-Fiber, Preformed Pipe Insulation: Comply with ASTM C 547, Type I, Grade A, with factory-applied ASJ.

D. Mineral-Fiber, Pipe and Tank Insulation: Complying with ASTM C 1393, Type II or Type IIIA Category 2, or with properties similar to ASTM C 612, Type IB; and having factory-applied FSK jacket. Nominal density is 2.5 lb/cu. ft. (40 kg/cu. m) or more. Thermal conductivity (k-value) at 100 degrees F (55 degrees C) is 0.29 Btu x in./h x sq. ft. x degrees F (0.042 W/m x K) or less.

E. Flexible Elastomeric Adhesive: Comply with MIL-A-24179A, Type II, Class I.

F. Mineral-Fiber Adhesive: Comply with MIL-A-3316C, Class 2, Grade A.

G. Vapor-Barrier Mastic: Water based; suitable for indoor and outdoor use on below ambient services.

H. Factory-Applied Jackets: When factory-applied jackets are indicated, comply with the following:

1. ASJ: White, kraft-paper, fiberglass-reinforced scrim with aluminum-foil backing; complying with ASTM C 1136, Type I.
2. FSK Jacket: Aluminum-foil, fiberglass-reinforced scrim with kraft-paper backing; complying with ASTM C 1136, Type II.

I. ASJ Tape: White vapor-retarder tape matching factory-applied jacket with acrylic adhesive, complying with ASTM C 1136.

J. FSK Tape: Foil-face, vapor-retarder tape matching factory-applied jacket with acrylic adhesive; complying with ASTM C 1136.

PART 3 - EXECUTION

3.1 PIPE INSULATION INSTALLATION

A. Comply with requirements of the Midwest Insulation Contractors Association's "National Commercial & Industrial Insulation Standards" for insulation installation on pipes and equipment.

B. Insulation Installation at Interior Wall and Partition Penetrations (That Are Not Fire Rated): Install insulation continuously through walls and partitions.

C. Insulation Installation at Fire-Rated Wall, Partition, and Floor Penetrations: Install insulation continuously through penetrations. Seal penetrations. Comply with requirements in Division 07 Section "Penetration Firestopping."

D. Flexible Elastomeric Insulation Installation:

1. Seal longitudinal seams and end joints with adhesive to eliminate openings in insulation that allow passage of air to surface being insulated.
2. Insulation Installation on Pipe Fittings and Elbows: Install mitered sections of pipe insulation. Secure insulation materials and seal seams with adhesive to eliminate openings in insulation that allow passage of air to surface being insulated.

E. Mineral-Fiber Insulation Installation:

1. Insulation Installation on Straight Pipes and Tubes: Where vapor barriers are indicated, seal longitudinal seams, end joints, and protrusions with vapor-barrier mastic and joint sealant.
2. For insulation with factory-applied jackets on above ambient surfaces, secure laps with outward clinched staples at 6 inches (150 mm) o.c.
3. For insulation with factory-applied jackets on below ambient surfaces, do not staple longitudinal tabs but secure tabs with additional adhesive as recommended by insulation material manufacturer and seal with vapor-barrier mastic and flashing sealant.

F. Interior Piping System Applications: Insulate the following piping systems:

1. Domestic hot water.
2. Recirculated domestic hot water.
3. Roof drain bodies and horizontal rainwater leaders of storm water piping.
4. Exposed water supplies and sanitary drains of fixtures for people with disabilities.

G. Do not apply insulation to the following systems, materials, and equipment:

1. Flexible connectors.
2. Sanitary drainage and vent piping.
3. Drainage piping located in crawlspaces unless otherwise indicated.
4. Chrome-plated pipes and fittings, except for plumbing fixtures for people with disabilities.
5. Piping specialties, including air chambers, unions, strainers, check valves, plug valves, and flow regulators.

3.2 EQUIPMENT INSULATION SCHEDULE

A. Domestic hot-water storage tank insulation shall be the following:

1. Mineral-Fiber Pipe and Tank: 1 inch thick.

3.3 INDOOR PIPING INSULATION SCHEDULE

A. Unless otherwise indicated, do not install insulation on the following:

1. Drainage piping located in crawlspaces.
2. Underground piping.

B. Domestic Hot and Recirculated Hot Water:

1. NPS 1-1/4 and Smaller: Insulation shall be one of the following:

a. Mineral-Fiber, Preformed Pipe Insulation, Type I: 1 inch thick.

2. NPS 1-1/2 and Larger: Insulation shall be one of the following:

a. Mineral-Fiber, Preformed Pipe Insulation, Type I: 1 inch thick.

C. Exposed Sanitary Drains, Domestic Water, Domestic Hot Water, and Stops for Plumbing Fixtures for People with Disabilities:

1. All Pipe Sizes: Insulation shall be the following:

a. Manufactured Protective Shielding Pipe Covers.

END OF SECTION 220700

SECTION 22 11 16 - DOMESTIC WATER PIPING

PART 1 - GENERAL

1.1 SECTION REQUIREMENTS

A. Comply with NSF 14 for plastic, potable domestic water piping and components.

B. Comply with NSF 61 for potable domestic water piping and components.

PART 2 - PRODUCTS

2.1 PIPE AND FITTINGS

A. Hard Copper Tubing: ASTM B 88, Types L and M (ASTM B 88M, Types B and C), water tube, drawn temper with wrought-copper, solder-joint fittings. Furnish wrought-copper fittings if indicated.

1. Copper Unions: Cast-copper-alloy, hexagonal-stock body, with ball-and-socket, metal-to-metal seating surfaces and solder-joint or threaded ends.
2. Joining Materials: Use ASTM B 813, water-flushable, lead-free flux; ASTM B 32, lead-free-alloy solder.

B. Soft Copper Tubing: ASTM B 88, Types K and L (ASTM B 88M, Types A and B), water tube, annealed temper with copper pressure fittings, cast-copper-alloy or wrought-copper, solder-joint fittings. Furnish wrought-copper fittings if indicated.

1. Joining Materials: Use ASTM B 813, water-flushable, lead-free flux; ASTM B 32, lead-free-alloy solder.

C. PVC Pipe: ASTM D 1785, Schedule 40.

1. PVC Fittings: ASTM D 2466, Schedule 40, socket type.

D. Special-Duty Valves:

1. Comply with requirements in Division 22 Section "General-Duty Valves for Plumbing Piping" for general-duty metal valves.
2. Comply with requirements in Division 22 Section "Domestic Water Piping Specialties" for balancing valves, drain valves, backflow preventers, and vacuum breakers.

E. Transition Fittings: Manufactured piping coupling or specified piping system fitting. Same size as pipes to be joined and pressure rating at least equal to pipes to be joined.

F. Flexible Connectors: Stainless-steel, corrugated-metal tubing with wire-braid covering. Working-pressure rating a minimum of 200 psig (1380 kPa).

2.2 PIPING JOINING MATERIALS

A. Solder Filler Metals: ASTM B 32, lead-free alloys. Include water-flushable flux according to ASTM B 813.

B. Brazing Filler Metals: AWS A5.8/A5.8M, BCuP Series, copper-phosphorus alloys for general-duty brazing unless otherwise indicated.

2.3 SPECIALTY VALVES

A. Comply with requirements in Division 22 Section “General-Duty Valves for Plumbing Piping” for general-duty metal valves.

B. Comply with requirements in Division 22 Section “Domestic Water Piping Specialties” for balancing valves, drain valves, backflow preventers, and vacuum breakers.

2.4 TRANSITION FITTINGS

A. General Requirements:
   1. Same size as pipes to be joined.
   2. Pressure rating at least equal to pipes to be joined.
   3. End connections compatible with pipes to be joined.

B. Fitting-Type Transition Couplings: Manufactured piping coupling or specified piping system fitting.

C. Plastic-to-Metal Transition Fittings:
   1. Manufacturers: Subject to compliance with requirements, available manufacturers offering products that may be incorporated into the Work include, but are not limited to the following:
      a. Charlotte Pipe and Foundry Company.
      b. Harvel Plastics, Inc.
      c. Spears Manufacturing Company.
   2. Description: CPVC or PVC one-piece fitting with manufacturer’s Schedule 80 equivalent dimensions; one end with threaded brass insert and one solvent-cement-socket or threaded end.

D. Plastic-to-Metal Transition Unions:
   1. Manufacturers: Subject to compliance with requirements, available manufacturers offering products that may be incorporated into the Work include, but are not limited to, the following:
      a. Colonial Engineering, Inc.
      b. NIBCO INC.
      c. Spears Manufacturing Company.
   2. Description: CPVC or PVC four-part union. Include brass or stainless-steel threaded end, solvent-cement-joint or threaded plastic end, rubber O-ring, and union rut.

2.5 DIELECTRIC FITTINGS

A. General Requirements: Assembly of copper alloy and ferrous materials or ferrous material body with separating nonconductive insulating material suitable for system fluid, pressure, and temperature.

B. Dielectric Unions:

1. Manufacturers: Subject to compliance with requirements, available manufacturers offering products that may be incorporated into the Work include, but are not limited to, the following:
    a. Capitol Manufacturing Company.
    b. Central Plastics Company.
    c. EPCO Sales, Inc.
    d. Hart Industries International, Inc.
    e. Watts Regulator Co.; a division of Watts Water Technologies, Inc.
    f. Zurn Plumbing Products Group; Wilkins Water Control Products.
2. Description:
    a. Pressure Rating: 150 psig at 180 degrees F.
    b. End Connections: Solder-joint copper alloy and threaded ferrous.

C. Dielectric Flanges:
1. Manufacturers: Subject to compliance with requirements, available manufacturers offering products that may be incorporated into the Work include, but are not limited to, the following:
    a. Capitol Manufacturing Company.
    b. Central Plastics Company.
    c. EPCO Sales, Inc.
    d. Watts Regulator Co.; a division of Watts Water Technologies, Inc.
2. Description:
    a. Factory-fabricated, bolted, companion-flange assembly.
    b. Pressure Rating: 150 psig.
    c. End Connections: Solder-joint copper alloy and threaded ferrous; threaded solder-joint copper alloy and threaded ferrous.

D. Dielectric-Flange Kits:
1. Manufacturers: Subject to compliance with requirements, available manufacturers offering products that may be incorporated into the Work include, but are not limited to, the following:
    a. Advance Products & Systems, Inc.
    b. Calpico, Inc.
    c. Central Plastics Company.
    d. Pipeline Seal and Insulator, Inc.
2. Description:
    a. Nonconducting materials for field assembly of companion flanges.
    b. Pressure Rating: 150 psig.
    c. Gasket: Neoprene or phenolic.
    d. Bolt Sleeves: Phenolic or polyethylene.
    e. Washers: Phenolic with steel backing washers.

E. Dielectric Couplings:
1. Manufacturers: Subject to compliance with requirements, available manufacturers offering products that may be incorporated into the Work include, but are not limited to, the following:
    a. Calpico, Inc.
    b. Lochinvar Corporation.
2. Description:
    a. Galvanized-steel coupling.
    b. Pressure Rating: 300 psig at 225 degrees F.
    c. End Connections: Female threaded.
    d. Lining: Inert and noncorrosive, thermoplastic.

F. Dielectric Nipples:

1. Manufacturers: Subject to compliance with requirements, available manufacturers offering products that may be incorporated into the Work include, but are not limited to, the following:
    a. Perfection Corporation; a subsidiary of American Meter Company.
    b. Precision Plumbing Products, Inc.
    c. Victaulic Company.
2. Description:
    a. Electroplated steel nipple complying with ASTM F 1545.
    b. Pressure Rating: 300 psig at 225 degrees F.
    c. End Connections: Male threaded or grooved.
    d. Lining: Inert and noncorrosive, propylene.

2.6 ESCUTCHEONS

A. General: Manufactured ceiling, floor, and wall escutcheons and floor plates.

B. One Piece, Cast Brass: Polished, chrome-plated finish with set screws.

C. One Piece, Deep Pattern: Deep-drawn, box-shaped brass with chrome-plated finish.

D. One Piece, Stamped Steel: Chrome-plated finish with set screw.

E. Split Casting, Cast Brass: Polished, chrome-plated finish with concealed hinge and set screw.

F. Split Plate, Stamped Steel: Chrome-plated finish with concealed hinge, set screw.

G. One-Piece Floor Plates: Cast-iron flange with holes for fasteners.

H. Split-Casting Floor Plates: Cast brass with concealed hinge.

2.7 SLEEVES

A. Galvanized-Steel-Sheet Sleeves: 0.0239 inch minimum thickness; round tube closed with welded longitudinal joint.

B. Molded-PE Sleeves: Reusable, PE, tapered-cup shaped, and smooth outer surface with nailing flange for attaching to wooden forms.

C. Galvanized-Steel-Pipe Sleeves: ASTM A 53/A 53M, Type E, Grade B, Schedule 40, zinc-coated, with plain ends.

PART 3 - EXECUTION

3.1 INSTALLATION

A. Drawings plans, schematics, and diagrams indicate general location and arrangement of piping. Install piping as indicated unless deviations to layout are approved on coordination drawings.

B. Comply with requirements in Division 22 Section "Common Work Results for Plumbing" for basic piping installation requirements.

C. Install wall penetration system at each service pipe penetration through foundation wall. Make installation watertight. Comply with requirements in Division 22 Section "Common Work Results for Plumbing" for wall penetration systems.

D. Install shutoff valve, hose-end drain valve, strainer, pressure gage, and test tee with valve, inside the building at each domestic water service entrance. Comply with requirements in Division 22 Section "Common Work Results for Plumbing" for pressure gages and Division 22 Section "Domestic Water Piping Specialties" for drain valves and strainers.

E. Install shut off valve immediately upstream of dielectric fittings.

F. Install domestic water piping without pitch for horizontal piping and plumb for vertical piping.

G. Rough-in domestic water piping for water-meter installation according to utility company's requirements.

H. Comply with requirements in Division 22 Section "Common Work Results for Plumbing" for basic piping joint construction.

1. Soldered Joints: Comply with procedures in ASTM B 828 unless otherwise indicated.

I. Comply with requirements in Division 22 Section "Common Work Results for Plumbing" for pipe hanger and support devices.

J. Support vertical piping at each floor.

K. Install flexible connectors in suction and discharge piping connections to each domestic water pump.

L. Install piping parallel or at 90 degree angles from building walls.

M. Install piping above ceilings to allow space for ceiling panel removal and coordinate with other services in space.

N. Install piping to allow service and maintenance.

O. Install pipe fittings at pressure rating higher than system

P. Install fittings for each change of direction.

Q. Install unions at final connection to each piece of equipment it is serving.

3.2 INSPECTING AND CLEANING

A. Inspect and test piping systems as follows:

1. Fill domestic water piping. Check components to determine that they are not air bound and that piping is full of water.

2. Test for leaks and defects in new piping and parts of existing piping that have been altered, extended, or repaired.

B. Clean and disinfect potable domestic water piping by filling system with water/chlorine solution with at least 50 ppm (50 mg/L) of chlorine. Isolate with valves and allow to stand for 24 hours. Flush system with clean, potable water until no chlorine is in water coming from system after the standing time.

3.3 PIPING SCHEDULE

A. Underground, Service Entrance Piping: Soft copper tubing.

B. Aboveground Distribution Piping: Type L hard copper tubing.

3.4 VALVE SCHEDULE

A. Drawings indicate valve types to be used. Where specific valve types are not indicated, the following requirements apply:

1. Shutoff Duty: Use bronze ball or gate valves for piping NPS 2 (DN 50) and smaller. Use cast-iron butterfly or gate valves with flanged ends for piping NPS 2-1/2 (DN 65) and larger.
2. Throttling Duty: Use bronze ball or globe valves for piping NPS 2 (DN 50) and smaller. Use cast-iron butterfly valves with flanged ends for piping NPS 2-1/2 (DN 65) and larger.
3. Drain Duty: Hose-end drain valves.

B. Install gate valves close to main on each branch and riser serving two or more plumbing fixtures or equipment connections and where indicated.

C. Install gate or ball valves on inlet to each plumbing equipment item, on each supply to each plumbing fixture not having stops on supplies, and elsewhere as indicated.

D. Install drain valve at base of each riser, at low points of horizontal runs, and where required to drain water distribution piping system.

E. Install swing check valve on discharge side of each pump and elsewhere as indicated.

F. Install ball valves in each hot-water circulating loop and discharge side of each pump.

END OF SECTION 221116

SECTION 22 11 19 - DOMESTIC WATER PIPING SPECIALTIES

PART 1 - GENERAL

1.1 RELATED DOCUMENTS

A. Drawings and general provisions of the Contract, including General and Supplementary Conditions and Division 01 Specification Sections, apply to this Section.

1.2 SUMMARY

A. Section Includes:

1. Temperature-actuated, water mixing valves.
2. Strainers for domestic water piping.
3. Hose bibbs.
4. Wall hydrants.
5. Water-hammer arresters.
6. Air vents.
7. Trap-seal primer device.
8. Flexible connectors.

1.3 SUBMITTALS

A. Product Data: For each type of product.

1.4 MINIMUM

A. Minimum working pressure for domestic water piping specialties: 180 psig.

PART 2 - PRODUCTS

2.1 BALANCING VALVES

A. Memory-Stop Balancing Valves:

1. Basis-of-Design Product: Subject to compliance with requirements, provide NIBCO Inc.; T1710 or comparable product by one of the following:

   a. Conbraco Industries, Inc.
   b. Milwaukee Valve Company.

2. Standard: MSS SP-110 for two-piece, copper-alloy ball valves.
3. Pressure Rating: 400-psig (2760-kPa) minimum CWP.

4. Size: NPS 2 (DN 50) or smaller.
5. Body: Copper alloy.
6. Port: Standard or full port.
7. Ball: Chrome-plated brass.
8. Seats and Seals: Replaceable.
9. End Connections: Threaded.
10. Handle: Vinyl-covered steel with memory-setting device.

2.2 TEMPERATURE-ACTUATED, WATER MIXING VALVES

A. Water-Temperature Limiting Devices:

1. Basis-of-Design Product: Subject to compliance with requirements, provide Watts; LFMMV or comparable product by one of the following:

   a. Leonard Valve Company.
   b. Powers; a division of Watts Water Technologies, Inc. (LFLM490)
   c. Symmons Industries, Inc.
   d. Zurn Industries, LLC; Plumbing Products Group; Wilkins Water Control Products.

2. Standard: ASSE 1017.
3. Pressure Rating: 125 psig (860 kPa).
4. Type: Thermostatically controlled, water mixing valve.
5. Material: Bronze body with corrosion-resistant interior components.
6. Connections: Threaded union inlets and outlet.
7. Accessories: Check stops on hot- and cold-water supplies, and adjustable, temperature-control handle.
8. Tempered-Water Setting: 120 degrees F (49 degrees C).
9. Tempered-Water Design Flow Rate: 0.5 gpm (0.032 L/s).
10. Valve Finish: Rough bronze.

B. Individual-Fixture, Water Tempering Valves:

1. Basis-of-Design Product: Subject to compliance with requirements, provide Watts; LFMMV or comparable product by one of the following:

   a. Lawler Manufacturing Company, Inc.
   b. Leonard Valve Company.
   c. Powers; a division of Watts Water Technologies, Inc. (LFLM495)
   d. Zurn Industries, LLC; Plumbing Products Group; Wilkins Water Control Products.

2. Standard: ASSE 1069 & 1070, thermostatically controlled, water tempering valve.
3. Pressure Rating: 125 psig (860 kPa) minimum unless otherwise indicated.
4. Body: Bronze body with corrosion-resistant interior components.
5. Temperature Control: Adjustable.
6. Inlets and Outlet: Threaded.
7. Finish: Rough or chrome-plated bronze.
8. Accessories: Manual temperature control, check stops on hot- and cold-water supplies, and adjustable, temperature-control handle.
9. Tempered-Water Setting: 105 degrees F (41 degrees C).

10. Minimum Tempered-Water Design Flow Rate: 0.5 gpm (0.03 L/s).

2.3 STRAINERS FOR DOMESTIC WATER PIPING

A. Y-Pattern Strainers:

1. Pressure Rating: 125 psig (860 kPa) minimum unless otherwise indicated.
2. Body: Bronze for NPS 2 (DN 50) and smaller; cast iron with interior lining that complies with AWWA C550 or that is FDA approved, epoxy coated and for NPS 2-1/2 (DN 65) and larger.
3. End Connections: Threaded for NPS 2 (DN 50) and smaller; flanged for NPS 2-1/2 (DN 65) and larger.
4. Screen: Stainless steel with round perforations unless otherwise indicated.
5. Perforation Size:

    a. Strainers NPS 2 (DN 50) and Smaller: 0.020 inch (0.51 mm) .
    b. Strainers NPS 2-1/2 to NPS 4 (DN 65 to DN 100): 0.045 inch (1.14 mm) .
    c. Strainers NPS 5 (DN 125) and Larger: 0.10 inch (2.54 mm) .

6. Drain: Factory-installed, hose-end drain valve.

2.4 HOSE BIBBS

A. Hose Bibbs:

1. Standard: ASME A112.18.1 for sediment faucets.
2. Body Material: Bronze.
3. Seat: Bronze, replaceable.
4. Supply Connections: NPS 1/2 or NPS 3/4 (DN 15 or DN 20) threaded or solder-joint inlet.
5. Outlet Connection: Garden-hose thread complying with ASME B1.20.7.
6. Pressure Rating: 125 psig (860 kPa).
7. Vacuum Breaker: Integral nonremovable, drainable, hose-connection vacuum breaker complying with ASSE 1011.
8. Finish for Equipment Rooms: Rough bronze, or chrome or nickel plated.
9. Finish for Service Areas: Rough bronze.
10. Finish for Finished Rooms: Chrome or nickel plated.
11. Operation for Equipment Rooms: Wheel handle or operating key.
12. Operation for Service Areas: Wheel handle.
13. Operation for Finished Rooms: Operating key.
14. Include operating key with each operating-key hose bibb.
15. Include integral wall flange with each chrome- or nickel-plated hose bibb.

2.5 WALL HYDRANTS

A. Moderate-Climate Wall Hydrants:

1. Basis-of-Design Product: Subject to compliance with requirements, provide Woodford; B65 or comparable product by one of the following:

a. Josam Company.
b. Zurn
c. MIFAB, Inc.
d. Smith, Jay R. Mfg. Co.; Division of Smith Industries, Inc.
e. Watts Drainage Products.

2. Standard: ASME A112.21.3M for concealed -outlet, self-draining wall hydrants.
3. Pressure Rating: 125 psig (860 kPa).
4. Operation: Loose key.
5. Inlet: NPS 3/4 or NPS 1 (DN 20 or DN 25).
6. Outlet:

a. Concealed, with integral vacuum breaker or nonremovable hose-connection vacuum breaker complying with ASSE 1011 or backflow preventer complying with ASSE 1052.
b. Garden-hose thread complying with ASME B1.20.7.

7. Box: Deep, flush mounted with cover.
8. Box and Cover Finish: Polished nickel bronze.
9. Operating Keys(s): One with each wall hydrant.

2.6 WATER-HAMMER ARRESTERS

A. Water-Hammer Arresters:

1. Basis-of-Design Product: Subject to compliance with requirements, provide Zurn; 1250XL or comparable product by one of the following:

a. AMTROL, Inc.
b. Josam Company.
c. MIFAB, Inc.
d. Precision Plumbing Products, Inc.
e. Sioux Chief Manufacturing Company, Inc.
f. Smith, Jay R. Mfg. Co.; Division of Smith Industries, Inc.
g. Watts Drainage Products.

2. Standard: ASSE 1010 or PDI-WH 201.
3. Type: Copper tube with piston, lead-free.
4. Size: ASSE 1010, Sizes AA and A through F, or PDI-WH 201, Sizes A through F.

2.7 AIR VENTS

A. Welded-Construction Automatic Air Vents:

1. Body: Stainless steel.
2. Pressure Rating: 150-psig (1035-kPa) minimum pressure rating.
3. Float: Replaceable, corrosion-resistant metal.
4. Mechanism and Seat: Stainless steel.
5. Size: NPS 3/8 (DN 10) minimum inlet.

6. Inlet and Vent Outlet End Connections: Threaded.

2.8 TRAP-SEAL PRIMER DEVICE

A. Supply-Type, Trap-Seal Primer Device:
   1. Basis-of-Design Product: Subject to compliance with requirements, provide Precision Plumbing Products; P1-500 or comparable product by one of the following:

      a. MIFAB, Inc.
      b. Smith, Jay R. Mfg. Co.; Division of Smith Industries, Inc.
      c. Watts; a division of Watts Water Technologies, Inc.; Watts Regulator Company.

   2. Standard: ASSE 1018.
   3. Pressure Rating: 125 psig (860 kPa) minimum.
   4. Body: Bronze.
   5. Inlet and Outlet Connections: NPS 1/2 (DN 15) threaded, union, or solder joint.
   6. Gravity Drain Outlet Connection: NPS 1/2 (DN 15) threaded or solder joint.
   7. Finish: Chrome plated, or rough bronze for units used with pipe or tube that is not chrome finished.
   8. Provide adjusting screw to adjust between high and low pressures.

2.9 FLEXIBLE CONNECTORS

A. Basis-of-Design Product: Subject to compliance with requirements, provide Metraflex; BBS (Bronze) or SST/MLP (Steel) or comparable product by one of the following:

   1. Flex-Hose Co., Inc.
   2. Flexicraft Industries.

B. Bronze-Hose Flexible Connectors: Corrugated-bronze tubing with bronze wire-braid covering and ends brazed to inner tubing.

   1. Working-Pressure Rating: Minimum 200 psig (1380 kPa).
   2. End Connections NPS 2 (DN 50) and Smaller: Threaded copper pipe or plain-end copper tube.
   3. End Connections NPS 2-1/2 (DN 65) and Larger: Flanged copper alloy.

C. Stainless-Steel-Hose Flexible Connectors: Corrugated-stainless-steel tubing with stainless-steel wire-braid covering and ends welded to inner tubing.

   1. Working-Pressure Rating: Minimum 200 psig (1380 kPa).
   2. End Connections NPS 2 (DN 50) and Smaller: Threaded steel-pipe nipple.
   3. End Connections NPS 2-1/2 (DN 65) and Larger: Flanged steel nipple.

2.10 VACUUM BREAKERS

A. Pipe-Applied, Atmospheric-Type Vacuum Breakers:
   1. Manufacturers: Subject to compliance with requirements, provide products by one of the following:

a. Ames Co.
b. Conbraco Industries, Inc.
c. FEBCO; SPX Valves & Controls.
d. Rain Bird Corporation.
e. Toro Company (The); Irrigation Div.
f. Watts Industries, Inc.; Water Products Div.
g. Zurn Plumbing Products Group; Wilkins Div.

2. Standard: ASSE 1001.
3. Size: NPS ½ to NPS 3 (DN 8 to DN 80), as required to match connected piping.
4. Body: Bronze.
5. Inlet and Outlet Connections: Threaded.
6. Finish: Chrome plated.

B. Hose-Connection Vacuum Breakers:
1. Manufacturers: Subject to compliance with requirements, provide products by one of the following:
a. Conbraco Industries, Inc.
b. MIFAB, Inc.
c. Watts Industries, Inc.; Water Products Div.
d. Woodford Manufacturing Company.
e. Zurn Plumbing Products Group; Light Commercial Operation.
f. Zurn Plumbing Products Group; Wilkins Div.
2. Standard: ASSE 1011.
3. Body: Bronze, nonremovable, with manual drain.
4. Outlet Connection: Garden-hose threaded complying with ASME B1.20.7.
5. Finish: Chrome or nickel plated.

C. Pressure Vacuum Breakers:
1. Manufacturers: Subject to compliance with requirements, provide products by one of the following:
a. Ames Co.
b. Conbraco Industries, Inc.
c. FEBCO; SPX Valves & Controls.
d. Toro Company (The); Irrigation Div.
e. Watts Industries, Inc.; Water Products Div.
f. Zurn Plumbing Products Group; Wilkins Div.
2. Standard: ASSE 1020.
3. Operation: Continuous-pressure applications.
4. Pressure Loss: 5 psig maximum, through middle 1/3 of flow range.
5. Accessories:
a. Valves: Ball type, on inlet and outlet.

2.11 DRAIN VALVES

A. Ball-Valve-Type, Hose-End Drain Valves:
1. Standard: MSS SP-110 for standard-port, two-piece ball valves.
2. Pressure Rating: 400 psig minimum CWP.
3. Size: NPS ¾ (DN 20).
4. Body: Copper alloy.
5. Ball: Chrome plated brass.

6. Seats and Seals: Replaceable.
7. Handle: Vinyl-covered steel.
8. Inlet: Threaded or solder joint.
9. Outlet: Threaded, short nipple with garden-hose thread complying with ASME B1.20.7 and cap with brass chain.

B. Gate-Valve-Type, Hose-End Drain Valves:
1. Standard: MSS SP-80 for gate valves.
2. Pressure Rating: Class 125.
3. Size: NPS ¾ (DN 20).
4. Body: ASTM B 62 bronze.
5. Inlet: NPS ¾ (DN 20).
6. Outlet: Garden-hose thread complying with ASME B1.20.7 and cap with brass chain.

C. Stop-and-Waste Drain Valves:
1. Standard: MSS SP-110 for ball valves or MSS SP-80 for gate valves.
2. Pressure Rating: 200 psig minimum CWP or Class 125.
3. Size: NPS ¾ (DN 20).
4. Body: Copper alloy or ASTM B 62 bronze.
5. Drain: NPS 1/8 (DN 6) side outlet with cap.

PART 3 - EXECUTION

3.1 INSTALLATION

A. Install water regulators with inlet and outlet shutoff valves and bypass with memory-stop balancing valve. Install pressure gages on inlet and outlet.

B. Install water-control valves with inlet and outlet shutoff valves and bypass with globe valve. Install pressure gages on inlet and outlet.

C. Install balancing valves in locations where they can easily be adjusted.

D. Install temperature-actuated, water mixing valves with check stops or shutoff valves on inlets and with shutoff valve on outlet.

1. Install cabinet-type units recessed in or surface mounted on wall as specified.

E. Install Y-pattern strainers for water on supply side of each control valve water pressure-reducing valve solenoid valve and pump.

F. Install outlet boxes recessed in wall or surface mounted on wall. Install 2-by-4-inch (38-by-89-mm) fire-retardant-treated-wood blocking, wall reinforcement between studs. Comply with requirements for fire-retardant-treated-wood blocking in Section 061000 "Rough Carpentry."

G. Install water-hammer arresters in water piping according to PDI-WH 201.

H. Install air vents at high points of water piping. Install drain piping and discharge onto floor drain.

I. Install supply-type, trap-seal primer valves with outlet piping pitched down toward drain trap a minimum of 1 percent, and connect to floor-drain body, trap, or inlet fitting. Adjust valve for proper flow.

3.2 CONNECTIONS

A. Comply with requirements for ground equipment in Section 260526 "Grounding and Bonding for Electrical Systems."

B. Fire-retardant-treated-wood blocking is specified in Section 260519 "Low-Voltage Electrical Power Conductors and Cables" for electrical connections.

3.3 LABELING AND IDENTIFYING

A. Equipment Nameplates and Signs: Install engraved plastic-laminate equipment nameplate or sign on or near each of the following:

1. Primary, thermostatic, water mixing valves.
2. Manifold, thermostatic, water mixing-valve assemblies.

B. Distinguish among multiple units, inform operator of operational requirements, indicate safety and emergency precautions, and warn of hazards and improper operations, in addition to identifying unit.

3.4 FIELD QUALITY CONTROL

A. Perform the following tests and inspections:

1. Test each pressure vacuum breaker reduced-pressure-principle backflow preventer and double-check, backflow-prevention assembly according to authorities having jurisdiction and the device's reference standard.

B. Domestic water piping specialties will be considered defective if they do not pass tests and inspections.

C. Prepare test and inspection reports.

3.5 ADJUSTING

A. Set field-adjustable flow set points of balancing valves.

B. Set field-adjustable temperature set points of temperature-actuated, water mixing valves.

END OF SECTION 221119

SECTION 22 13 16 - SANITARY WASTE AND VENT PIPING

PART 1 - GENERAL

1.1 SECTION REQUIREMENTS

A. Minimum Pressure Requirement for Soil, Waste, and Vent: 10-foot head of water (30 kPa).

B. Comply with NSF 14, "Plastic Piping Components and Related Materials," for plastic piping components.

PART 2 - PRODUCTS

2.1 PIPES AND FITTINGS

A. Copper Drainage Tube and Fittings: ASTM B 306, Type DWV drawn temper with wrought copper, Type DWV drainage fittings.

B. Hub-and-Spigot Cast-Iron Soil Pipe and Fittings: ASTM A 74, Service class; ASTM C 564 rubber gaskets.

C. Hubless Cast-Iron Soil Pipe and Fittings: ASTM A 888 or CISPI 301, with ASTM C 1277 shielded couplings.

D. PVC Plastic, DWV Pipe and Fittings: ASTM D 2665, Schedule 40, plain ends with PVC socket-type, DWV pipe fittings.

PART 3 - EXECUTION

3.1 PIPING INSTALLATION

A. Comply with requirements in Division 22 Section "Common Work Results for Plumbing" for basic piping installation requirements.

B. Install cast-iron soil piping according to CISPI's "Cast Iron Soil Pipe and Fittings Handbook," Chapter IV, "Installation of Cast Iron Soil Pipe and Fittings."

C. Install wall penetration system at each pipe penetration through foundation wall. Make installation watertight. Comply with requirements in Division 22 Section "Common Work Results for Plumbing" for wall penetration systems.

1. Sleeves are not required for cast-iron soil piping passing through concrete slabs-on-grade if slab is without membrane waterproofing.

D. Make changes in direction for soil and waste drainage and vent piping using appropriate branches, bends, and long-sweep bends. Sanitary tees and short-sweep 1/4 bends may be used on vertical stacks if change in direction of flow is from horizontal to vertical. Use long-turn, double Y-branch and 1/8-bend fittings if 2 fixtures are installed back to back or side by side with common drain pipe. Straight tees, elbows, and crosses may be used on vent lines. Do not change direction of flow more than 90 degrees. Use proper size of standard increasers and reducers if pipes of different sizes are connected. Reducing size of drainage piping in direction of flow is prohibited.

E. Lay buried building drainage piping beginning at low point of each system. Install true to grades and alignment indicated, with unbroken continuity of invert. Place hub ends of piping upstream. Install required gaskets according to manufacturer's written instructions for use of lubricants, cements, and other installation requirements. Maintain swab in piping and pull past each joint as completed.

F. Install soil and waste drainage and vent piping at the following minimum slopes, unless otherwise indicated:

1. Building Sanitary Drain: 2 percent downward in direction of flow for piping NPS 3 (DN 80) and smaller; 1 percent downward in direction of flow for piping NPS 4 (DN 100) and larger.
2. Horizontal Sanitary Drainage Piping: 2 percent downward in direction of flow.
3. Vent Piping: 1 percent down toward vertical fixture vent or toward vent stack.

G. Install PVC soil and waste drainage and vent piping according to ASTM D 2665.

H. Install underground PVC soil and waste drainage piping according to ASTM D 2321.

I. Do not enclose, cover, or put piping into operation until it is inspected and approved by authorities having jurisdiction.

J. Comply with requirements in Division 22 Section "Common Work Results for Plumbing" for basic piping joint construction.

K. Soldered Joints: Use ASTM B 813, water-flushable, lead-free flux; ASTM B 32, lead-free-alloy solder; and ASTM B 828 procedure unless otherwise indicated.

L. Comply with requirements in Division 22 Section "Common Work Results for Plumbing" for pipe hanger and support devices.

3.2 PIPE SCHEDULE

A. Aboveground Applications: PVC plastic, DWV pipe and fittings with solvent-cemented joints.

B. Belowground Applications: Hubless, cast-iron soil pipe and fittings.

END OF SECTION 221316

SECTION 22 13 19 - SANITARY WASTE PIPING SPECIALTIES

PART 1 - GENERAL

1.1 SECTION REQUIREMENTS

A. Submittals: Product Data.

PART 2 - PRODUCTS

2.1 CLEANOUTS

A. Exposed Metal Cleanouts:

1. Manufacturers: Subject to compliance with requirements, provide products by one of the following:

   a. Josam Company; Josam Div.
   b. MIFAB, Inc.
   c. Smith, Jay R. Mfg. Co.; Division of Smith Industries, Inc.
   d. Watts Drainage Products Inc.
   e. Zurn Plumbing Products Group; Specification Drainage Operation.

2. Standard: ASME A112.36.2M for cast iron for cleanout test tee.
3. Size: Same as connected drainage piping
4. Body Material: Hub-and-spigot, cast-iron soil pipe T-branch or Hubless, cast-iron soil pipe test tee as required to match connected piping.
5. Closure: Countersunk, brass plug.
6. Closure Plug Size: Same as or not more than one size smaller than cleanout size.
7. Closure: Stainless-steel plug with seal.

B. Metal Floor Cleanouts:

1. Basis-of-Design Product: Subject to compliance with requirements, provide Zurn; Z1400-K or a comparable product by one of the following:

   a. Josam Company; Josam Div.
   b. Smith, Jay R. Mfg. Co.; Division of Smith Industries, Inc.
   c. Watts Drainage Products Inc.

2. Standard: ASME A112.36.2M for threaded, adjustable housing cleanout.
3. Size: Same as connected branch.
4. Type: Threaded, adjustable housing.
5. Body or Ferrule: Cast iron.
6. Clamping Device: Required.
7. Outlet Connection: Inside calk.
8. Closure: Brass plug with tapered threads.

9. Adjustable Housing Material: Cast iron with threads.
10. Frame and Cover Material and Finish: Nickel-bronze, copper alloy.
11. Frame and Cover Shape: Round.
12. Top Loading Classification: Medium Duty.
13. Riser: ASTM A 74, Service class, cast-iron drainage pipe fitting and riser to cleanout.

C. Cast-Iron Wall Cleanouts:

1. Basis-of-Design Product: Subject to compliance with requirements, provide Zurn; Z1446 or a comparable product by one of the following:

   a. Josam Company; Josam Div.
   b. MIFAB, Inc.
   c. Smith, Jay R. Mfg. Co.; d of Smith Industries, Inc.
   d. Watts Drainage Products Inc (CO-460-RD).

2. Standard: ASME A112.36.2M. Include wall access.
3. Size: Same as connected drainage piping.
4. Body: Hub-and-spigot, cast-iron soil pipe T-branch or Hubless, cast-iron soil pipe test tee as required to match connected piping.
5. Closure: Countersunk, drilled-and-threaded brass plug.
6. Closure Plug Size: Same as or not more than one size smaller than cleanout size.
7. Wall Access: Round, flat, chrome-plated brass or stainless-steel cover plate with screw.

2.2 FLOOR DRAINS

A. Cast-Iron Floor Drains:

1. Basis-of-Design Product: Subject to compliance with requirements, provide Watts; FD-100-A or a comparable product by one of the following:

   a. Josam Company; Josam Div.
   b. MIFAB, Inc.
   c. Smith, Jay R. Mfg. Co.; Division of Smith Industries, Inc.
   d. Zurn Plumbing Products Group; Specification Drainage Operation (Z415B).

2. Standard: ASME A112.6.3.
3. Pattern: Floor drain.
4. Body Material: Gray iron.
5. Seepage Flange: Required.
6. Anchor Flange: Required.
7. Clamping Device: Required.
8. Outlet: Bottom.
9. Top or Strainer Material: Nickel bronze.
10. Top Shape: Round; except square in tile floors.
11. Dimensions of Top or Strainer: 6-inch (152-mm).
12. Top Loading Classification: Medium Duty.
13. Funnel: Provide where indicated on plans.
14. Inlet Fitting: Gray iron, with threaded inlet and threaded or spigot outlet, and trap-seal primer valve connection.

15. Trap Material: Cast iron.
16. Trap Pattern: Deep-seal P-trap.
17. Trap Features: Cleanout and trap-seal primer valve drain connection.

2.3 ROOF FLASHING ASSEMBLIES

A. Roof Flashing Assemblies:

1. Available Manufacturers: Subject to compliance with requirements, manufacturers offering products that may be incorporated into the Work include, but are not limited to, the following:

a. Acorn Engineering Company; Elmdor/Stoneman Div.
b. Thaler Metal Industries Ltd.

B. Description: Manufactured assembly made of 6.0-lb/sq. ft. 0.0938-inch- thick, lead flashing collar and skirt extending at least 8 inches from pipe, with galvanized-steel boot reinforcement and counterflashing fitting.

1. Open-Top Vent Cap: Without cap.

PART 3 - EXECUTION

3.1 INSTALLATION

A. Install cleanouts at grade and extend to where building sanitary drains connect to building sanitary sewers.

B. Install floor drains at low points of surface areas to be drained. Set grates of drains flush with finished floor unless otherwise indicated.

1. Install floor-drain flashing collar or flange so no leakage occurs between drain and adjoining flooring. Maintain integrity of waterproof membranes where penetrated.
2. Install individual traps for floor drains connected to sanitary building drain, unless otherwise indicated.

C. Install roof flashing assemblies on sanitary stack vents and vent stacks that extend through roof.

D. Install air-gap fittings on indirect-waste piping discharge into sanitary drainage system.

E. Install grease removal devices on floor. Install trap, vent, and flow-control fitting according to authorities having jurisdiction. Install control panel adjacent to unit, unless otherwise indicated.

END OF SECTION 221319

SECTION 22 40 00 - PLUMBING FIXTURES

PART 1 - GENERAL

1.1 SECTION REQUIREMENTS

A. Submittals: Product Data for each type of plumbing fixture, including trim, fittings, accessories, appliances, appurtenances, equipment, and supports.

1.2 QUALITY ASSURANCE

A. NSF Standard: Comply with NSF/ANSI 61, "Drinking Water System Components - Health Effects," for supply-fitting materials that will be in contact with potable water.

PART 2 - PRODUCTS

2.1 PLUMBING FIXTURES

A. Stainless steel single compartment sink with drainboard.
   1. Elkay model ESS4924 RW6C, 14 gauge type 304 stainless steel, wall mounted service sink with 20 inch by 18 inch basin, 10 inch deep with drain board and 8 inch high backsplash.
   2. Elkay model LK393ABH chrome plated mixing faucet with 6 inch wrist blades 10-1/4 inch swing gooseneck faucet, and vandal resistant anti-hose aerator.
   3. Elkay model LK18 stainless steel perforated strainer grid, 1-1/2 inch OD x 4 inch stainless steel tailpiece.
   4. Provide 14 gauge stainless steel support brackets and wall hanger.

B. Self-contained emergency eye wash station.
   1. Fendall Pure Flow 1000 model 32-001000-0000 self-contained wall mount emergency eye wash station compliant with ANSI Z358.1 2004 with dust cover and fold down nozzles.
   2. Pressure balanced to provide a constant 0.4 gpm at a constant stream height for entire 15 minute flushing cycle.
   3. Wall mounting bracket.

C. Automatic trap primer.
   1. Precision Plumbing Products model PR-500 pressure activated trap primer made of corrosion resistant brass.
   2. ½ inch NPT inlet and outlet.
   3. Install to absolutely rigid condition.

D. Hose reel.
   1. Strahman model RS hose reel with spring return; capacity for 50 feet of 5/8 inch ID hose with wall bracket.
   2. Strahman model RS multi-purpose water hose 5/8 inch ID with maximum working pressure of 150 psig suitable for temperatures from -20 degrees F to 200 degrees F.

Provide with male NPT and female NPT threaded ends for connections to hose reel and spray nozzle.

3. Strahman model Hydro-Pro 150 automatic adjustable spray nozzle, 5-7 gpm at normal (50 psig to 80 psig) conditions.
4. Strahman model M-20-TS thermostatically controlled mixing valve with temperature indicator on discharge.

E. Floor drain (equipment rooms, full grate).
1. Josam number 32320-20-Y, cast iron floor drain with sediment bucket with lift bar, collar, and polished bronze tap.
2. Furnish and install clamp device if drain is installed in floor above slab on grade.
3. Furnish and install required deep seal P-trap.
4. Refer to Contract Drawings for drain size.

2.2 WALL-MOUNTED WATER CLOSETS

A. Support:

1. Standard: ASME A112.6.1M.
2. Description: Waste-fitting assembly as required to match drainage piping material and arrangement with faceplates, couplings gaskets, and feet; bolts and hardware matching fixture. Include additional extension coupling, faceplate, and feet for installation in wide pipe space.
3. Water-Closet Mounting Height: Standard Child or Handicapped/elderly according to ICC/ANSI A117.1 as indicated.

2.3 WALL HUNG URINALS

A. Support: ASME A112.6.1M, Type I, urinal carrier with fixture support plates and coupling with seal and fixture bolts and hardware matching fixture. Include rectangular, steel uprights.

2.4 WALL-MOUNT LAVATORY

A. Vitreous-China Lavatory: Wall-mounting,

1. Basis-of-Design Product: Product indicated on Drawings, or equivalent.

B. Fixture Support: ASME A112.6.1M, Type II, concealed-arm lavatory carrier with rectangular, steel uprights.

2.5 SERVICE SINKS

A. Support: ASME A112.6.1M, Type II, sink carrier.

2.6 SUPPLY FITTINGS

A. NSF Standard: Comply with NSF/ANSI 61, "Drinking Water System Components - Health Effects," for supply-fitting materials that will be in contact with potable water.

B. Standard: ASME A112.18.1/CSA B125.1.

C. Supply Piping: Chrome-plated-brass pipe or chrome-plated copper tube matching water-supply piping size. Include chrome-plated-brass or stainless-steel wall flange.

D. Supply Stops: Chrome-plated-brass, one-quarter-turn, ball-type or compression valve with inlet connection matching supply piping.

E. Operation: Cross handle.

F. Risers:

1. NPS 1/2 (DN 15).
2. ASME A112.18.6, braided- or corrugated-stainless-steel, flexible hose.

2.7 ELECTRIC WATER COOLERS

A. Electric Water Coolers: Wall-mounted,

1. Basis-of-Design Product: Product indicated on Drawings, or equivalent.

B. Fixture Support: ASME A112.6.1M, Type I, water-cooler carrier with rectangular, steel uprights.

2.8 GROUT

A. Standard: ASTM C 1107/C 1107M, Grade B, post-hardening and volume-adjusting, dry, hydraulic-cement grout.

B. Characteristics: Nonshrink; recommended for interior and exterior applications.

C. Design Mix: 5000-psi (34.5-MPa), 28-day compressive strength.

D. Packaging: Premixed and factory packaged.

PART 3 - EXECUTION

3.1 EXAMINATION

A. Examine roughing-in of water supply and sanitary drainage and vent piping systems to verify actual locations of piping connections before plumbing fixture installation.

B. Examine walls, floors, and counters for suitable conditions where plumbing fixtures will be installed.

C. Proceed with installation only after unsatisfactory conditions have been corrected.

3.2 INSTALLATIONS

A. Install fixtures level and plumb according to roughing-in drawings.

B. Install water-supply piping with shutoff valve on supply to each fixture to be connected to domestic water distribution piping. Use ball, gate, or globe valve. Install valves in locations where they can be easily reached for operation. Valves are specified in Section 220523 "GENERAL-DUTY VALVES FOR PLUMBING PIPING"

C. Install trap and waste piping on drain outlet of each fixture to be connected to sanitary drainage system.

D. Connect water closets and urinals with water supplies, and soil/ waste, and vent piping. Connect lavatories and sinks with water supplies, stops, and risers, and with traps, soil, waste and vent piping. Use size fittings required to match fixture.

E. Where installing piping adjacent to plumbing fixtures, allow space for service and maintenance.

F. Install fixtures with flanges and gasket seals.

G. Install flushometer valves for accessible water closets and urinals with handle mounted on wide side of compartment. Install other actuators in locations that are easy for people with disabilities to reach.

H. Install accessible, wall-mounted fixtures at mounting height for the handicapped/elderly, according to ICC/ANSI A117.1.

I. Fasten wall-hanging plumbing fixtures securely to supports attached to building substrate.

J. Fasten floor-mounted fixtures to substrate. Fasten fixtures having holes for securing fixture to wall construction, to reinforcement built into walls.

K. Water Closet Support Installation:

1. Install supports, affixed to building substrate, for floor-mounted, back-outlet water closets.
2. Use carrier supports with waste-fitting assembly and seal.
3. Install floor-mounted, back-outlet water closets attached to building floor substrate, onto waste-fitting seals; and attach to support.
4. Install wall-mounted, back-outlet water-closet supports with waste-fitting assembly and waste-fitting seals; and affix to building substrate.

L. Urinal Support Installation:

1. Install supports, affixed to building substrate, for wall-hung urinals.
2. Use off-floor carriers with waste fitting and seal for back-outlet urinals.
3. Use carriers without waste fitting for urinals with tubular waste piping.
4. Use chair-type carrier supports with rectangular steel uprights for accessible urinals.

M. Fasten wall-mounted fittings to reinforcement built into walls.

N. Fasten counter-mounting plumbing fixtures to casework.

O. Secure supplies to supports or substrate within pipe space behind fixture.

P. Set shower receptors and mop basins in leveling bed of cement grout.

Q. Install individual supply inlets, supply stops, supply risers, and tubular brass traps with cleanouts at each fixture.

R. Install escutcheons at wall, floor, and ceiling penetrations in exposed, finished locations and within cabinets and millwork. Use deep-pattern escutcheons where required to conceal protruding fittings.

S. Seal joints between fixtures and walls, floors, and counters using sanitary-type, one-part, mildew-resistant, silicone sealant. Match sealant color to fixture color.

T. Install piping connections between plumbing fixtures and piping systems and plumbing equipment.

U. Install protective shielding pipe covers and enclosures on exposed supplies and waste piping of accessible fixtures.

V. Ground equipment.

3.3 ADJUSTING

A. Operate and adjust plumbing fixtures and controls. Replace damaged and malfunctioning plumbing fixtures, fittings, and controls.

B. Adjust water pressure at flushometer valves and faucets to produce proper flow.

C. Adjust water-cooler flow regulators for proper flow and stream height.

D. Adjust water-cooler temperature settings.

E. Install fresh batteries in battery-powered, electronic-sensor mechanisms.

3.4 CLEANING AND PROTECTION

A. After completing installation of plumbing fixtures, inspect and repair damaged finishes.

B. Clean plumbing fixtures and fittings with manufacturers' recommended cleaning methods and materials.

C. Install protective covering for installed plumbing fixtures and fittings.

D. Do not allow use of plumbing fixtures for temporary facilities unless approved in writing by Owner.

END OF SECTION 224000

SECTION 23 05 00 - COMMON WORK RESULTS FOR HVAC

PART 1 GENERAL

1.1 RELATED DOCUMENTS

A. Drawings and general provisions of the Contract, including General and Supplementary Conditions and Division 01 Specification Sections, apply to this Section.

B. Applicable provisions of this Section apply to all sections of Division 23, Heating, Ventilating and Air Conditioning.

1.2 CONTRACT DOCUMENTS

A. Examine all drawings and specifications carefully before submitting a bid. Architectural drawings take precedence over mechanical or electrical drawings with reference to building construction. If discrepancies or conflicts occur between drawings, or between drawings and specifications, notify the Engineer in writing prior to bid date; however, the most stringent requirement shall govern.

B. For purposes of clearness and legibility, drawings are essentially diagrammatic and, although size and location of equipment are drawn to scale wherever possible, Contractor shall make use of all data in all of the contract documents and shall verify this information at the building site.

C. The drawings indicate required size and points of termination of pipes, conduits and ducts and suggest proper routes to conform to structure avoid obstructions and preserve clearances. However, it is not intended that drawings indicate all necessary offsets, and it shall be the responsibility of the Contractor to make the installation in such a manner as to conform to structure, avoid obstructions, preserve headroom and keep openings and passageways clear, without further instructions or cost to the Owner.

D. Furnish, install and/or connect with appropriate services all items shown on any drawing without additional compensation.

E. Consider the terms "provide" and "install" as synonymous with "furnish and install".

1.3 CODE REQUIREMENTS

A. Perform work in accordance with the following codes and any applicable statutes, ordinances, codes, and regulations of governmental authorities having jurisdiction.

1. ASHRAE:
   a. Standard 15 – Safety Standard for Refrigeration Systems
   b. Standard 55 – Thermal Environmental Conditions for Human Occupancy
   c. Standard 62 – Ventilation Standard for Acceptable Indoor air Quality
   d. Standard 90.1 – Energy Standard for Buildings Except Low Rise Residential Buildings
2. Occupational Safety and Health Regulations (OSHA)
3. National Fire Protection Association (NFPA):

a. NFPA 1 – Uniform Fire Code
b. NFPA 54 – National Fuel Gas Code
c. NFPA 70 – National Electrical Code
d. NFPA 90A – Standard for the Installation of Air Conditioning and Ventilation Systems
e. NFPA 90B – Standard for the Installation of Warm Air Heating and Air Conditioning Systems
f. NFPA 91 – Standard for the Installation of Blower and Exhaust Systems
g. NFPA 101 – Life Safety Code

4. Florida Building Code 2010 Edition:
   a. Accessibility Code
   b. Energy Conservation Code
   c. Fuel Gas Code
   d. Mechanical Code
   e. Plumbing Code

5. Florida Administrative Code

6. ADA Accessibility Guidelines for Buildings (ADAAG)

B. Resolve, in writing, any code violation discovered in contract documents with the Engineer prior to bidding. After award of the contract, make any correction or addition necessary for compliance with applicable codes at no additional cost to Owner.

C. The installer shall include in the work, without extra cost to the Owner, any labor, materials, services, apparatus and drawings required to comply with all applicable laws, ordinances, rules and regulations.

1.4 REFERENCE SPECIFICATIONS AND STANDARDS

A. Materials which are specified by reference to Federal Specifications; ASTM, ASME, ANSI, or AWWA Specifications; Federal Standards; or other standard specifications must comply with latest editions, revisions, amendments or supplements in effect on date bids are received. Specifications and standards are minimum requirements for all equipment, material and work. In instances where capacities, size or other feature of equipment, devices or materials exceed these minimums, meet listed or shown capacities.

B. Whenever a reference is made to a standard, installation and materials shall comply with the latest published edition of the standard at the time project is bid unless otherwise specified herein.

1.5 QUALITY ASSURANCE

A. The intent of the Division 23 specifications and the accompanying drawings is to provide a complete, operable, and satisfactory HVAC system as shown, specified, and required by applicable codes. Include all work specified in Division 23 and shown on the accompanying drawings.

B. The drawings that accompany the Division 23 specifications are diagrammatic. They do not show every offset, bend, tee, or elbow which may be required to install work in the space provided and avoid conflicts. Follow the drawings as closely as is practical to do so and install additional bends, offsets and elbows where required by local conditions from

measurements taken at the building, subject to approval, and without additional cost to the contract.

C. Coordinate exact requirements governed by actual job conditions. Check all information and report any discrepancies before fabricating work. Report changes in time to avoid unnecessary work.

D. Systems shall be built and installed to deliver their full rated capacity at the efficiency for which they were designed.

E. The entire HVAC system shall operate at full capacity without objectionable noise or vibration.

F. Materials and Equipment:

1. Furnish new and unused materials and equipment. Work shall be of good quality, free of faults and defects.
2. All equipment shall fit in the space provided.
3. Each piece of equipment provided shall meet all detailed requirements of the drawings and specifications and shall be suitable for the installation shown.
4. Where two or more units of the same class of equipment are provided, use products of the same manufacturer; component parts of the entire system need not be products of the same manufacturer.
5. Manufacturer's model names and numbers used in these drawings and specifications are subject to change per manufacturer's action. Contractor shall therefore verify model names and numbers with manufacturer's representative before ordering any product or equipment.

G. Workmanship:

1. Install all materials in a neat and workmanlike manner.
2. Follow manufacturer’s directions. If they are in conflict with the contract documents, obtain clarification before starting work.

H. Cutting and Patching:

1. Cutting, patching and repairing for the proper installation and completion of the work specified in this division, including plastering, masonry work, concrete work, carpentry work, firestopping, and painting, shall be performed by skilled craftsmen of each respective trade in conformance with the appropriate division of work. Additional openings required in building construction shall be made by drilling or cutting.
2. Fill holes which are cut oversize so that a tight fit is obtained around the objects passing through.
3. Do not pierce beams or columns without permission of the Port and then only as directed.
4. New or existing work that is cut or damaged shall be restored to its original condition. Where alterations disturb existing finishes, the surfaces shall be repaired, refinished and left in condition existing prior to commencement of work.

5. Equipment of higher electrical characteristics may be provided if proposed equipment is approved in writing and connecting electrical services are appropriately modified.

1.6 SUBMITTALS

A. Submit in accordance with project contract documents.

B. If not specified in the project contract documents, then submit either a minimum of five hard copies in 3-ring binders or electronic PDFs, as required by the Engineer.

C. All submittals shall include adequate descriptive literature, catalog cuts, shop drawings and other data necessary for the Engineer to ascertain that the proposed equipment and materials comply with specification requirements. Catalog cuts submitted for approval shall be legible and clearly identify equipment being submitted.

D. Product Data:

1. Submit Product Data for review on all scheduled pieces of equipment, equipment requiring electrical connections or connections by other trades, and as required by the contract documents. Include manufacturer's detailed shop drawings, specifications, and data sheets. Data sheets shall include capacities, RPM, BHP, pressure drop, design and operating pressures, temperatures and similar data. Manufacturer's abbreviations or codes are not acceptable.

E. Operation and Maintenance Data:

1. Submit operation and maintenance data for review on all scheduled pieces of equipment, and as required by the contract documents.

F. Commissioning Documentation:

1. Submit commissioning plans, schedules, and related documentation in accordance with the contract documents.

1.7 PERMITS, FEES, AND INSPECTIONS

A. Obtain and pay for all permits, fees, tap fees, connection charges, demand charges, systems charges, impact fees and inspections.

B. Deliver all certificates of inspection issued by authorities having jurisdiction to the Engineer.

1.8 PROVISIONS FOR LARGE EQUIPMENT

A. Make provisions for the necessary openings in the building to allow for admittance of all equipment.

1.9 PROJECT CONDITIONS

A. Coordinate exact requirements governed by actual job conditions. Check all information and report any discrepancies before fabricating work. Report changes in time to avoid unnecessary work.

1.10 WARRANTY

A. Warranty work and equipment for one year from the date of final acceptance of the project. During the warranty period provide labor and materials to make good any faults or imperfections that may arise due to defects or omissions in materials or workmanship.

1.11 RECORD DRAWINGS

A. Keep a record set of the contract documents at job site and continuously update deviations from design by marking up (in red) drawings. When work is complete give Owner copies of record drawings.

1.12 FILTERS

A. Provide construction filters during construction and replace with clean filters prior to testing and balancing of system.

PART 2 PRODUCTS

2.1 SLEEVES

A. Mechanical Sleeve Seals: Modular rubber sealing element unit, designed for field assembly, to fill annular space between pipe and sleeve.

B. Galvanized-Steel Sheet: 0.0239-inch (0.6-mm) minimum thickness; round tube closed with welded longitudinal joint.

C. Steel Pipe: ASTM A 53, Type E, Grade B, Schedule 40, galvanized, plain ends.

D. PVC Pipe: ASTM D 1785, Schedule 40.

2.2 GROUT

A. Description: ASTM C 1107, Grade B, nonshrink and nonmetallic, dry hydraulic-cement grout.

2.3 MOTORS

A. Motor Characteristics:

1. Frequency Rating: 60 Hz.
2. Voltage Rating: NEMA standard voltage for circuit voltage to which motor is connected.
3. Service Factor: 1.15.
4. Duty: Continuous duty at ambient temperature of 105 degrees F (40 degrees C) and at altitude of 3300 feet (1005 m) above sea level.
5. Capacity and Torque Characteristics: Sufficient to start, accelerate, and operate connected loads at designated speeds, at installed altitude and environment, with indicated

operating sequence, and without exceeding nameplate ratings or considering service factor.

6. Enclosure: Unless otherwise indicated, open dripproof.

7. Motors Used with Variable-Frequency Controllers: Ratings, characteristics, and features coordinated with and approved by controller manufacturer.

2.4 HANGERS AND SUPPORTS

A. Hanger and Pipe Attachments: Factory fabricated with galvanized coatings; nonmetallic coated for hangers in direct contact with copper tubing.

B. Powder-Actuated Fasteners: Threaded-steel stud, with pull-out and shear capacities appropriate for supported loads and building materials where used.

C. Mechanical-Expansion Anchors: Insert-wedge-type, zinc-coated steel, with pull-out and shear capacities appropriate for supported loads and building materials where used.

2.5 VIBRATION ISOLATION CONTROL DEVICES

A. Vibration Supports:

1. Elastomeric Isolation Pads: Arranged in single or multiple layers of oil- and water-resistant, of sufficient stiffness for uniform loading over pad area, molded with a non-slip pattern and galvanized-steel baseplates, and factory cut to sizes that match supported equipment.

   a. Basis-of-Design Product: Subject to compliance with requirements, provide Mason Industries, Inc., Super W; or comparable product by one of the following:

      1. Kinetics Noise Control, Inc.
      2. Vibration Mountings & Controls, Inc.

2. Elastomeric Isolation Mounts: Double-deflection type, with molded, oil-resistant rubber or neoprene isolator elements with factory-drilled, encapsulated top plate and baseplate. Provide isolator with minimum 0.5-inch (13-mm) static deflection.

   a. Basis-of-Design Product: Subject to compliance with requirements, provide Mason Industries, Inc., Type ND; or comparable product by one of the following:

      1. Kinetics Noise Control, Inc.
      2. Vibration Mountings & Controls, Inc.

3. Open-Spring Isolators: Freestanding, laterally stable, open-spring isolators. Provide isolator with minimum 1-inch (25-mm) static deflection.

   a. Basis-of-Design Product: Subject to compliance with requirements, provide Mason Industries, Inc., Type SLFH; or comparable product by one of the following:

      1. Kinetics Noise Control, Inc.
      2. Vibration Mountings & Controls, Inc.

4. Housed-Spring Isolators: Freestanding, laterally stable, open-spring isolators in two-part telescoping housing. Provide isolator with minimum 1-inch (25-mm) static deflection.

   a. Basis-of-Design Product: Subject to compliance with requirements, provide Mason Industries, Inc., Type C; or comparable product by one of the following:

      1. Kinetics Noise Control, Inc.
      2. Vibration Mountings & Controls, Inc.

B. Vibration Hangers:

1. Elastomeric Hangers: Double-deflection type, with molded, oil-resistant rubber or neoprene isolator elements bonded to steel housings with threaded connections for hanger rods. Provide isolator with minimum 0.5-inch (13-mm) static deflection.

   a. Basis-of-Design Product: Subject to compliance with requirements, provide Mason Industries, Inc., HD; or comparable product by one of the following:

      1. Kinetics Noise Control, Inc.
      2. Vibration Mountings & Controls, Inc.

2. Spring Hangers: Combination coil-spring and elastomeric-insert hanger with spring and insert in compression. Provide isolator with minimum 1-inch (25-mm) static deflection.

   a. Basis-of-Design Product: Subject to compliance with requirements, provide Mason Industries, Inc., HS-B; or comparable product by one of the following:

      1. Kinetics Noise Control, Inc.
      2. Vibration Mountings & Controls, Inc.

2.6 PRESSURE GAGES AND TEST PLUGS

A. Pressure Gages: Direct-mounting, indicating-dial type complying with ASME B40.100. Dry metal case, minimum 2-1/2-inch (63-mm) diameter with red pointer on white face, and plastic window. Minimum accuracy 3 percent of middle half of range. Range two times operating pressure.

B. Test Plug: Corrosion-resistant brass or stainless-steel body with two self-sealing rubber core inserts and gasketed and threaded cap, with extended stem for units to be installed in insulated piping. Minimum pressure and temperature rating of 500 psig at 200 degrees F (3450 kPa at 93 degrees C).

2.7 ACCESS DOCKS AND PANELS

A. Locate access panels for service of concealed items. Size at 12” x 12” minimum or 16” x 24” when person must pass through opening.

PART 3 EXECUTION

3.1 INSTALLATIONS

A. Install materials and equipment in a professional manner. The Engineer may direct replacement of items which, in his opinion, do not present a professional appearance. Replace or reinstall items at the expense of the Contractor.

B. Obstructions

1. The drawings indicate certain information pertaining to surface and subsurface obstructions which has been taken from available drawings. Such information is not guaranteed, however, as to accuracy of location or complete information.

2. Before any cutting or trenching operations are begun, verify with Owner's representative, utility companies, municipalities, and other interested parties that all available information has been provided. Verify locations given.

3. Should obstruction be encountered, whether shown or not, alter routing of new work, reroute existing lines, remove obstruction where permitted, or otherwise perform whatever work is necessary to satisfy the purpose of the new work and leave existing services and structures in a satisfactory and serviceable condition.

4. Assume total responsibility for and repair any damage to existing utilities or construction, whether or not such existing facilities are shown.

C. Where "rated" walls, floor, roofs and ceilings are penetrated or cut to install equipment, materials, devices, etc. the Contractor shall provide and install all materials required to re-establish the rating of the wall, floor, roof or ceiling to the satisfaction of the authority having jurisdiction.

D. Space Requirements: Consider space limitations imposed by contiguous work in selection and location of equipment and material. Do not provide equipment or material which is not suitable in this respect.

E. Select equipment to operate with minimum noise and vibration. If objectionable noise or vibration is produced or transmitted to or through the building structure by equipment, piping, ducts or other parts of work, rectify such conditions without cost to the Owner.

F. Wiring Method: Install cables in raceways and cable trays except low voltage network cable above accessible ceilings. Conceal raceway and cables except in unfinished spaces.

1. Install plenum cable in environmental air spaces, including plenum ceilings.

2. Comply with requirements for raceways and boxes specified in Division 26 Section "Raceways and Boxes for Electrical Systems."

G. Wiring within Enclosures: Bundle, lace, and train conductors to terminal points with no excess and without exceeding manufacturer's limitations on bending radii. Install lacing bars and distribution spools.

3.2 MOTOR INSTALLATION

A. Anchor motor assembly to base, adjustable rails, or other support, arranged and sized according to manufacturer's written instructions.

3.3 GENERAL PIPING INSTALLATIONS

A. Install piping free of sags and bends.

B. Install fittings for changes in direction and branch connections.

C. Install sleeves for pipes passing through concrete and masonry walls and concrete floor and roof slabs.

D. Exterior Wall, Pipe Penetrations: Mechanical sleeve seals installed in steel or cast-iron pipes for wall sleeves.

E. Comply with requirements in Division 07 Section "Penetration Firestopping" for sealing pipe penetrations in fire-rated construction.

F. Install unions at final connection to each piece of equipment.

G. Install dielectric unions and flanges to connect piping materials of dissimilar metals in gas piping.

3.4 GENERAL EQUIPMENT INSTALLATIONS

A. Install equipment to allow maximum possible headroom unless specific mounting heights are not indicated.

B. Install equipment level and plumb, parallel and perpendicular to other building systems and components, unless otherwise indicated.

C. Install mechanical equipment to facilitate service, maintenance, and repair or replacement of components. Connect equipment for ease of disconnecting, with minimum interference to other installations. Extend grease fittings to accessible locations.

D. Install equipment to allow right of way for piping installed at required slope.

3.5 BASES, SUPPORTS, AND ANCHORAGES

A. Anchor equipment to concrete base according to equipment manufacturer's written instructions and according to seismic codes at Project.

1. Construct concrete bases of dimensions indicated, but not less than 4 inches (100 mm) larger in both directions than supported unit.
2. Install dowel rods on 18-inch (450-mm) centers around the full perimeter of the base to connect concrete base to concrete floor.
3. Install epoxy-coated anchor bolts for supported equipment that extend through concrete base, and anchor into structural concrete floor.

4. Place and secure anchorage devices. Use supported equipment manufacturer's setting drawings, templates, diagrams, instructions, and directions furnished with items to be embedded.

5. Use 3000-psi (20.7-MPa), 28-day compressive-strength concrete and reinforcement as specified in Division 03 Section "Cast-in-Place Concrete"

3.6 HANGERS AND SUPPORTS

A. Comply with MSS SP-69 and MSS SP-89. Install building attachments within concrete or to structural steel.

B. Install hangers and supports to allow controlled thermal and seismic movement of piping systems.

C. Install powder-actuated fasteners and mechanical-expansion anchors in concrete after concrete is cured. Do not use in lightweight concrete or in slabs less than 4 inches (100 mm) thick.

D. Load Distribution: Install hangers and supports so piping live and dead loading and stresses from movement will not be transmitted to connected equipment.

E. Horizontal-Piping Hangers and Supports: Unless otherwise indicated and except as specified in piping system Specification Sections, install the following types:

1. Adjustable Steel Clevis Hangers (MSS Type 1): For suspension of noninsulated or insulated stationary pipes, NPS 1/2 to NPS 30 (DN 15 to DN 750).

2. Pipe Hangers (MSS Type 5): For suspension of pipes, NPS 1/2 to NPS 4 (DN 15 to DN 100), to allow off-center closure for hanger installation before pipe erection.

3. Adjustable Steel Band Hangers (MSS Type 7): For suspension of noninsulated stationary pipes, NPS 1/2 to NPS 8 (DN 15 to DN 200).

4. Adjustable Band Hangers (MSS Type 9): For suspension of noninsulated stationary pipes, NPS 1/2 to NPS 8 (DN 15 to DN 200).

5. Adjustable Swivel-Ring Band Hangers (MSS Type 10): For suspension of noninsulated stationary pipes, NPS 1/2 to NPS 2 (DN 15 to DN 50).

F. Vertical-Piping Clamps: Unless otherwise indicated and except as specified in piping system Specification Sections, install the following types:

1. Extension Pipe or Riser Clamps (MSS Type 8): For support of pipe risers, NPS 3/4 to NPS 20 (DN 20 to DN 500).

2. Carbon- or Alloy-Steel Riser Clamps (MSS Type 42): For support of pipe risers, NPS 3/4 to NPS 20 (DN 20 to DN 500), if longer ends are required for riser clamps.

3.7 VIBRATION ISOLATION CONTROL DEVICE INSTALLATION

A. Adjust vibration isolators to allow free movement of equipment limited by restraints.

B. Install resilient bolt isolation washers and bushings on equipment anchor bolts.

C. Install cables so they do not bend across sharp edges of adjacent equipment or building structure.

3.8 FIELD QUALITY CONTROL

A. Tests:

1. Include all tests specified and/or required under laws, rules and regulations of all departments having jurisdiction. Tests shall also be performed as indicated herein and other sections of the specifications.
2. After all mechanical systems have been completed and put into operation, subject each system to an operating test under design conditions to insure proper sequence and operation throughout the range of operation. Make adjustments as required to insure proper functioning of all systems.
3. All parts of the work and associated equipment shall be tested and adjusted to work properly and be left in perfect operating condition.
4. Correct defects disclosed by these tests without any additional cost to the Owner. Repeat tests on repaired or replaced work.
5. Maintain a log of all tests being conducted and have it available for review by the Engineer. Log to indicate date, type of tests, duration, and defects noted and when corrected.
6. Special tests on individual systems are specified under individual sections.
7. Mechanical Contractor shall provide personnel, tools and equipment and assist the Test and Balance Contractor in making any adjustments necessary to meet the test and balance requirements.

END OF SECTION 230500

SECTION 23 05 29 – HANGERS AND SUPPORTS FOR HVAC PIPING AND EQUIPMENT

PART 1 GENERAL

1.1 RELATED DOCUMENTS

A. Drawings and general provisions of the Contract, including General and Supplementary Conditions and Division 1 Specification Sections, apply to this Section.

1.2 SUMMARY

A. This Section includes the following hangers and supports for HVAC system piping and equipment:

1. Steel pipe hangers and supports.
2. Trapeze pipe hangers.
3. Metal framing systems.
4. Thermal-hanger shield inserts.
5. Fastener systems.
6. Pipe stands.
7. Equipment supports.

1.3 DEFINITIONS

A. MSS: Manufacturers Standardization Society for The Valve and Fittings Industry Inc.

B. Terminology: As defined in MSS SP-90, “Guidelines on Terminology for Pipe Hangers and Supports.”

1.4 PERFORMANCE REQUIREMENTS

A. Design supports for multiple pipes, including pipe stands, capable of supporting combined weight of supported systems, system contents, and test water.

B. Design equipment supports capable of supporting combined operating weight of supported equipment and connected systems and components.

C. Design seismic-restraint hangers and supports for piping and equipment and obtain approval from authorities having jurisdiction.

1.5 SUBMITTALS

A. Product Data: For the following:

1. Steel pipe hangers and supports.
2. Thermal-hanger shield inserts.
3. Powder-actuated fastener systems.

1.6 QUALITY ASSURANCE

A. Welding: Qualify procedures and personnel according to the following:

1. AWS D1.1, “Structural Welding Code—Steel.”
2. AWSD1.3, “Structural Welding Code—Sheet Steel.”
3. AWSD1.4, “Structural Welding Code—Reinforcing Steel.”

PART 2 PRODUCTS

2.1 STEEL PIPE HANGERS AND SUPPORTS

A. Description: MSS SP-58, Types 1 through 58, factory-fabricated components. Refer to Part 3 “Hanger and Support Applications” Article for where to use specific hanger and support types.

B. Manufacturers:

1. AAA Technology & Specialties Co., Inc.
2. Bergen-Power Pipe Supports.
3. B-Line Systems, Inc.; a division of Cooper Industries.
4. Carpenter & Paterson, Inc.
5. Empire Industries, Inc.
6. ERICO/Michigan Hanger Co.
7. Globe Pipe Hanger Products, Inc.
8. Grinnell Corp.
9. GS Metals Corp.
10. National Pipe Hanger Corporation.
11. PHD Industries, Inc.
12. PHS Industries, Inc.
13. Piping Technology & Products, Inc.
14. Tolco Inc.

C. Galvanized, Metallic Coatings: Pregalvanized or hot dipped.

D. Nonmetallic Coatings: Plastic coating, jacket, or liner.

E. Padded Hangers: Hangers with fiberglass or other pipe insulation pad or cushion for support of bearing surface of piping.

2.2 TRAPEZE PIPE HANGERS

A. Description: MSS SP-69, Type 59, shop- or field-fabricated pipe-support assembly made from structural-steel shapes with MSS SP-58 hanger rods, nuts, saddles, and U-bolts.

2.3 METAL FRAMING SYSTEMS

A. Description: MFMA-3, shop- or field-fabricated pipe-support assembly made of steel channels and other components.

B. Manufacturers:

1. B-Line Systems, Inc.; a division of Cooper Industries.
2. ERICO/Michigan Hanger Co.; ERISTRUT Div.
3. GS Metals Corp.
4. Power-Strut Div.; Tyco International, Ltd.
5. Thomas & Betts Corporation.
6. Tolco Inc.
7. Unistrut Corp.; Tyco International, Ltd.

C. Coatings: Manufacturer's standard finish, unless bare metal surfaces are indicated.

D. Nonmetallic Coatings: Plastic coating, jacket, or liner.

2.4 THERMAL-HANGER SHIELD INSERTS

A. Description: 100-psig- (690-kPa-) minimum, compressive-strength insulation insert encased in sheet metal shield.

B. Manufacturers:

1. Carpenter & Paterson, Inc.
2. ERICO/Michigan Hanger Co.
3. PHS Industries, Inc.
4. Pipe Shields, Inc.
5. Rilco Manufacturing Company, Inc.
6. Value Engineered Products, Inc.

C. Insulation-Insert Material for Cold Piping: Water-repellent treated, ASTM C 533, Type 1 calcium silicate with vapor barrier.

D. Insulation-Insert Material for Hot Piping: Water-repellent treated, ASTM C 533, Type 1 calcium silicate.

E. For Trapeze or Clamped Systems: Insert and shield shall cover entire circumference of pipe.

F. For Clevis or Band Hangers: Insert and shield shall cover lower 180 degrees of pipe.

G. Insert Length: Extend 2 inches beyond sheet metal shield for piping operating below ambient air temperature.

2.5 FASTENER SYSTEMS

A. Powder-Actuated Fasteners: Threaded-steel stud, for use in hardened Portland cement concrete with pull-out, tension, and shear capacities appropriate for supported loads and building materials where used.

1. Manufacturers:

a. Hilti, Inc.

b. ITW Ramset/Red Head.

c. Masterset Fastening Systems, Inc.

d. MKT Fastening, LLC.

e. Powers Fasteners.

B. Mechanical-Expansion Anchors: Insert-wedge-type zing-coated steel, for use in hardened Portland cement concrete with pull-out, tension, and shear capacities appropriate for supported loads and building materials where used.

1. Manufacturers:

a. B-Line Systems, Inc.; a division of Cooper Industries.

b. Empire Industries, Inc.

c. Hilti, Inc.

d. ITW Ramset/Red Head.

e. MKT Fastening, LLC.

f. Powers Fasteners.

2.6 PIPE STAND FABRICATION

A. Pipe Stands, General: Shop or field-fabricated assemblies made of manufactured corrosion-resistant components to support roof-mounted piping.

B. Compact Pipe Stand: One-piece plastic unit with integral-rod-roller, pipe clamps, or V-shaped cradle to support pipe, for roof installation without membrane penetration.

1. Manufacturers:

a. ERICO/Michigan Hanger Co.

b. MIRO Industries.

C. Low-Type, Single-Pipe Stand: One-piece stainless-steel base unit with plastic roller, for roof installation without membrane penetration.

1. Manufacturers:

a. MIRO Industries.

D. High-Type, Single-Pipe Stand: Assembly of base, vertical and horizontal members, and pipe support, for roof installation without membrane penetration.

1. Manufacturers:

a. ERICO/Michigan Hanger Co.

b. MIRO Industries.

c. Portable Pipe Hangers.

2. Base: Stainless steel.

3. Vertical Members: Two or more cadmium-plated-steel or stainless-steel, continuous-thread rods.

4. Horizontal Member: Cadmium-plated-steel or stainless-steel rod with plastic or stainless-steel, roller-type pipe support.

E. High-Type, Multiple-Pipe Stand: Assembly of bases, vertical and horizontal members, and pipe supports, for roof installation without membrane penetration.

1. Manufacturers:

a. Portable Pipe Hangers.

2. Bases: One or more plastic.

3. Vertical Members: Two or more protective-coated-steel channels.

4. Horizontal Member: Protective-coated-steel channel.

5. Pipe Supports: Galvanized-steel, clevis-type pipe hangers.

2.7 EQUIPMENT SUPPORTS

A. Description: Welded, shop- or field-fabricated equipment support made from structural-steel shapes.

2.8 MISCELLANEOUS MATERIALS

A. Structural Steel: ASTM A 36/A 36M, steel plates, shapes, and bars; black and galvanized.

B. Grout: ASTM C 1107, factory-mixed and –packaged, dry, hydraulic-cement, nonshrink and nonmetallic grout; suitable for interior and exterior applications.

1. Properties: Nonstaining, noncorrosive, and nongaseous.

2. Design Mix: 5000-psi (34.5-MPa), 28-day compressive strength.

PART 3 EXECUTION

3.1 HANGER AND SUPPORT APPLICATIONS

A. Specific hanger and support requirements are specified in Sections specifying piping systems and equipment.

B. Comply with MSS SP-69 for pipe hanger selections and applications that are not specified in piping system Sections.

C. Use hangers and supports with galvanized, metallic coatings for piping and equipment that will not have field-applied finish.

D. Use nonmetallic coatings on attachments for electrolytic protection where attachments are in direct contact with copper tubing.

E. Use padded hangers for piping that is subject to scratching.

F. Horizontal-Piping Hangers and Supports: Unless otherwise indicated and except as specified in piping system Sections, install the following types:

1. Adjustable, Steel Clevis Hangers (MSS Type 1): For suspension of noninsulated or insulated stationary pipes, NPS ½ to NPS 30 (DN 15 to DN 750).
2. Steel Pipe Clamps (MSS Type 4): For suspension of cold and hot pipes, NPS ½ to NPS 24 (DN 15 to DN 600), if little or no insulation is required.
3. Pipe Hangers (MSS Type 5): For suspension of pipes, NPS ½ to NPS 4 (DN 15 to DN 100), to allow off-center closure for hanger installation before pipe erection.
4. Adjustable, Swivel Split- or Solid-Ring Hangers (MSS Type 6): For suspension of noninsulated stationary pipes, NPS ¾ to NPS 8 (DN 20 to DN 200).
5. Adjustable, Steel Band Hangers (MSS Type 7): For suspension of noninsulated stationary pipes, NPS ½ to NPS 8 (DN 15 to DN 200).
6. Adjustable Band Hangers (MSS Type 9): For suspension of noninsulated stationary pipes, NPS ½ to NPS 8 (DN 15 to DN 200).
7. Adjustable, Swivel-Ring Band Hangers (MSS Type 10): For suspension of noninsulated stationary pipes, NPS ½ to NPS 2 (DN 15 to DN 50).
8. Split Pipe-Ring with or without Turnbuckle-Adjustment Hangers (MSS Type 11): For suspension of noninsulated stationary pipes, NPS 3/8 to NPS 8 (DN 10 to DN 200).
9. Extension Hinged or 2-Bolt Split Pipe Clamps (MSS Type 12): For suspension of noninsulated stationary pipes, NPS 3/8 to NPS 3 (DN 10 to DN 80).
10. U-Bolts (MSS Type 24): For support of heavy pipes, NPS ½ to NPS 30 (DN 15 to DN 750).
11. Clips (MSS Type 26): For support of insulated pipes not subject to expansion or contraction.
12. Pipe Saddle Supports (MSS Type 36): For support of pipes, NPS 4 to NPS 36 (DN 100 to DN 900), with steel pipe base stanchion support and cast-iron floor flange.
13. Pipe Stanchion Saddles (MSS Type 37): For support of pipes, NPS 4 to NPS 36 (DN 100 to DN 900), with steel pipe base stanchion support and cast-iron floor flange and with U-bolt to retain pipe.
14. Adjustable, Pipe Saddle Supports (MSS Type 38): For stanchion-type support for pipes, NPS 2-1/2 to NPS 36 (DN 65 to DN 900), if vertical adjustment is required, with steel pipe base stanchion support and cast-iron floor flange.
15. Single Pipe Rolls (MSS Type 41): For suspension of pipes, NPS 1 to NPS 30 (DN 25 to DN 750), from 2 rods if longitudinal movement caused by expansion and contraction might occur.
16. Adjustable Roller Hangers (MSS Type 43): For suspension of pipes, NPS 2-1/2 to NPS 20 (DN 65 to DN 500), from single rod if horizontal movement caused by expansion and contraction might occur.
17. Complete Pipe Rolls (MSS Type 44): For support of pipes, NPS 2 to NPS 42 (DN 50 to DN 1050), if longitudinal movement caused by expansion and contraction might occur but vertical adjustment is not necessary.

18. Pipe Roll and Plate Units (MSS Type 45): For support of pipes, NPS 2 to NPS 24 (DN 50 to DN 600), if small horizontal movement caused by expansion and contraction might occur and vertical adjustment is not necessary.

19. Adjustable Pipe Roll and Base Units (MSS Type 46): For support of pipes, NPS 2 to NPS 30 (DN 50 to DN 750), if vertical and lateral adjustment during installation might be required in addition to expansion and contraction.

G. Vertical-Piping Clamps: Unless otherwise indicated and except as specified in piping system Sections, install the following types:

1. Extension Pipe or Riser Clamps (MSS Type 8): For support of pipe risers, NPS ¾ to NPS 20 (DN 20 to DN 500).

2. Carbon- or Alloy-Steel Riser Clamps (MSS Type 42): For support of pipe risers, NPS ¾ to NPS 20 (DN 20 to DN 500), if longer ends are required for riser clamps.

H. Hanger-Rod Attachments: Unless otherwise indicated and except as specified in piping system Sections, install the following types:

1. Steel Turnbuckles (MSS Type 13): For adjustment up to 6 inches for heavy loads.

2. Steel Clevises (MSS Type 14): For 120 to 450 degrees F piping installations.

3. Swivel Turnbuckles (MSS Type 15): For use with MSS Type 11, split pipe rings.

4. Malleable-Iron Sockets (MSS Type 16): For attaching hanger rods to various types of building attachments.

5. Steel Weldless Eye Nuts (MSS Type 17): For 120 to 450 degrees F piping installations.

I. Building Attachments: Unless otherwise indicated and except as specified in piping system Sections, install the following types:

1. Steel or Malleable Concrete Inserts (MSS Type 18): For upper attachment to suspend pipe hangers from concrete ceiling.

2. Top-Beam C-Clamps (MSS Type 19): For use under roof installations with bar-joist construction to attach to top flange of structural shape.

3. Side-Beam or Channel Clamps (MSS Type 20): For attaching to bottom flange of beams, channels, or angles.

4. Center-Beam Clamps (MSS Type 21): For attaching to center of bottom flange of beams.

5. Welded Beam Attachments (MSS Type 22): For attaching to bottom of beams if loads are considerable and rod sizes are large.

6. C-Clamps (MSS Type 23): For structural shapes.

7. Top-Beam Clamps (MSS Type 25): For top of beams if hanger rod is required tangent to flange edge.

8. Side-Beam Clamps (MSS Type 27): For bottom of steel I-beams.

9. Steel-Beam Clamps with Eye Nuts (MSS Type 28): For attaching to bottom of steel I-beams for heavy loads.

10. Linked-Steel Clamps with Eye Nuts (MSS Type 29): For attaching to bottom of steel I-beams for heavy loads with link extensions.

11. Malleable Beam Clamps with Extension Pieces (MSS Type 30): For attaching to structural steel.

12. Welded-Steel Brackets: For support of pipes from below, or for suspending from above by using clip and rod. Use one of the following for indicated loads:

    a. Light (MSS Type 31): 750 lb.

    b. Medium (MSS Type 32): 1500 lb.

    c. Heavy (MSS Type 33): 3000 lb.

13. Side-Beam Brackets (MSS Type 34): For sides of steel or wooden beams.

14. Plate Lugs (MSS Type 57): For attaching to steel beams if flexibility at beam is required.

15. Horizontal Travelers (MSS Type 58): For supporting piping systems subject to linear horizontal movement where headroom is limited.

J. Saddles and Shields: Unless otherwise indicated and except as specified in piping system Sections, install the following types:

1. Protection Shields (MSS Type 40): Of length recommended in writing by manufacturer to prevent crushing insulation.

K. Comply with MSS SP-69 for trapeze pipe hanger selections and applications that are not specified in piping system Sections.

L. Comply with MFMA-102 for metal framing system selections and applications that are not specified in piping system Sections.

M. Use powder-actuated fasteners or mechanical-expansion anchors instead of building attachments where required in concrete construction.

3.2 HANGER AND SUPPORT INSTALLATION

A. Steel Pipe Hanger Installation: Comply with MSS Sp-69 and MSS SP-89. Install hangers, supports, clamps, and attachments as required to properly support piping from building structure.

B. Trapeze Pipe Hanger Installation: Comply with MSS SP-69 and MSS SP-89. Arrange for grouping of parallel runs of horizontal piping and support together on field-fabricated trapeze pipe hangers.

1. Pipes of Various Sizes: Support together and space trapezes for smallest pipe size or install intermediate supports for smaller diameter pipes as specified above for individual pipe hangers.

2. Field fabricate from ASTMA A 36/A 36M, steel shapes selected for loads being supported. Weld steel according to AWS D1.1.

C. Metal Framing System Installation: Arrange for grouping of parallel runs of piping and support together on field-assembled metal framing systems.

D. Thermal-Hanger Shield Installation: Install in pipe hanger or shield for insulated piping.

E. Fastener System Installation:

1. Install powder-actuated fasteners for use in lightweight concrete or concrete slabs less than 4 inches thick in concrete after concrete is placed and completely cured. Use operators that are

licensed by powder-actuated tool manufacturer. Install fasteners according to powder-actuated tool manufacturer's operating manual.

2. Install mechanical-expansion anchors in concrete after concrete is placed and completely cured. Install fasteners according to manufacturer's written instructions.

F. Pipe Stand Installation:

1. Pipe Stand Types: Assemble components and mount on smooth roof surface. Do not penetrate roof membrane.

G. Install hangers and supports complete with necessary inserts, bolts, rods, nuts, washers, and other accessories.

H. Equipment Support Installation: Fabricate from welded-structural-steel shapes.

I. Install hangers and supports to allow controlled thermal and seismic movement of piping systems, to permit freedom of movement between pipe anchors, and to facilitate action of expansion joints, expansion loops, expansion bends, and similar units.

J. Install lateral bracing with pipe hangers and supports to prevent swaying.

K. Install building attachments within concrete slabs or attach to structural steel. Install additional attachments at concentrated loads, including valves, flanges, and strainers, NPS 2-1/2 (DN 65) and larger and at changes in direction of piping. Install concrete inserts before concrete is placed; fasten inserts to forms and install reinforcing bars through opening at top of inserts.

L. Load Distribution: Install hangers and supports so piping live and dead loads and stresses from movement will not be transmitted to connected equipment.

M. Pipe Slopes: Install hangers and supports to provide indicated pipe slopes and so maximum pipe deflections allowed by ASME B31.1 (for power piping) and ASME B31.9 (for building services piping) are not exceeded.

N. Insulated Piping:

1. Install MSS SP-58, Type 40, protective shields on cold piping with vapor barrier. Shields shall span an arc of 180 degrees.

   a. Option: Thermal-hanger shield inserts may be used. Include steel weight-distribution plate for pipe NPS 4 (DN 100) and larger if pipe is installed on rollers.

2. Shield Dimensions for Pipe: Not less than the following:

   a. NPS ¼ to NPS 3-1/2 (DN 8 to DN 90): 12 inches long and 0.048 inch thick.

   b. NPS 4 (DN 100): 12 inches long and 0.06 inch thick.

   c. NPS 5 and NPS 6 (D 125 and DN 150): 18 inches long and 0.06 inch thick.

   d. NPS 8 to NPS 14 (DN 200 to DN 350): 24 inches long and 0.075 inch thick.

   e. NPS 16 to NPS 24 (DN 400 to DN 600): 24 inches long and 0.105 inch thick.

3. Pipes NPS 8 (DN 200) and Larger: Include wood inserts.

4. Insert Material: Length at least as long as protective shield.

5. Thermal-Hanger Shields: Install with insulation same thickness as piping insulation.

3.3 EQUIPMENT SUPPORTS

A. Fabricate structural-steel stands to suspend equipment from structure overhead or to support equipment above floor or roof.

B. Grouting: Place grout under supports for equipment and make smooth bearing surface.

C. Provide lateral bracing, to prevent swaying, for equipment supports.

3.4 METAL FABRICATIONS

A. Cut, drill, and fit miscellaneous metal fabrications for trapeze pipe hangers and equipment supports.

B. Fit exposed connections together to form hairline joints. Field weld connections that cannot be shop welded because of shipping size limitations.

C. Field Welding: Comply with AWS D1.1 procedures for shielded metal arc welding, appearance and quality of welds, and methods used in correcting welding work, and with the following:

1. Use materials and methods that minimize distortion and develop strength and corrosion resistance of base metals.
2. Obtain fusion without undercut or overlap.
3. Remove welding flux immediately.
4. Finish welds at exposed connections so no roughness shows after finishing and contours of welded surfaces match adjacent contours.

3.5 ADJUSTING

A. Hanger Adjustments: Adjust hangers to distribute loads equally on attachments and to achieve indicated slope of pipe.

B. Trim excess length of continuous-thread hanger and support rods to 1-1/2 inches.

3.6 PAINTING

A. Touch Up: Clean field welds and abraded areas of shop paint. Paint exposed areas immediately after erecting hangers and supports. Use same materials as used for shop painting. Comply with SSPC-PA 1 requirements for touching up field-painted surfaces.

1. Apply paint by brush or spray to provide minimum dry film thickness of 2.0 mils.

B. Galvanized Surfaces: Clean welds, bolted connections, and abraded areas and apply galvanizing-repair paint to comply with ASTM A 780.

END OF SECTION 230500

SECTION 23 05 53 – IDENTIFICATION FOR HVAC PIPING AND EQUIPMENT

PART 1 GENERAL

1.1 RELATED DOCUMENTS

A. Drawings and general provisions of the Contract, including General and Supplementary Conditions and Division 1 Specification Sections, apply to this Section.

1.2 SUMMARY

A. This Section includes the following mechanical identification materials and their installation:

1. Equipment nameplates.
2. Access panel and door markers.
3. Pipe markers.
4. Duct markers.
5. Stencils.
6. Valve tags.
7. Valve schedules.

1.3 SUBMITTALS

A. Valve numbering scheme.

B. Valve Schedules: For each piping system. Furnish extra copies (in addition to mounted copies) to include in maintenance manuals.

1.4 QUALITY ASSURANCE

A. ASME Compliance: Comply with ASME A13.1, “Scheme for the Identification of Piping Systems,” for letter size, length of color field, colors, and viewing angles of identification devices for piping.

1.5 COORDINATION

A. Coordinate installation of identifying devices with completion of covering and painting of surfaces where devices are to be applied.

B. Coordinate installation of identifying devices with location of access panels and doors.

C. Install identifying devices before installing acoustical ceilings and similar concealment.

PART 2 PRODUCTS

2.1 EQUIPMENT IDENTIFICATION DEVICES

A. Equipment Nameplates: Metal, with data engraved or stamped, for permanent attachment on equipment.

1. Data:

a. Manufacturer, product name, model number, and serial number.

b. Capacity, operating and power characteristics, and essential data.

c. Labels of tested compliances.

2. Location: Accessible and visible.

3. Fasteners: As required to mount on equipment.

B. Access Panel and Door Markers: 1/16-inch-(1.6-mm-) thick, engraved laminated plastic, with abbreviated terms and numbers corresponding to identification. Provide 1/8-inch center hole for attachment.

1. Fasteners: Self-tapping, stainless-steel screws or contact-type, permanent adhesive.

2.2 PIPING IDENTIFICATION DEVICES

A. Manufactured Pipe Markers, General: Preprinted, color-coded, with lettering indicating service, and showing direction of flow.

1. Colors: Comply with ASME A13.1, unless otherwise indicated.

2. Lettering: Use piping system terms indicated and abbreviate only as necessary for each application length.

3. Pipes with OD, Including Insulation, Less Than 6 Inches: Full-band pipe markers extending 360 degrees around pipe at each location.

4. Pipes with OD, Including Insulation, 6 Inches and Larger: Either full-band or strip-type pipe markers at least three times letter height and of length required for label.

5. Arrows: Integral with piping system service lettering to accommodate both directions; or as a separate unit on each pipe marker to indicate direction of flow.

B. Self-Adhesive Pipe Markers: Plastic with pressure-sensitive, permanent-type, self-adhesive back.

C. Plastic Tape: Continuously printed, vinyl tape at least 3 mils thick with pressure-sensitive, permanent-type, self-adhesive back.

1. Width for Markers on Pipes with OD, Including Insulation, Less Than 6 Inches: ¾ inch minimum.

2. Width for Markers on Pipes with OD, Including Insulation, 6 Inches or Larger: 1-1/2 minimum.

2.3 STENCILS

A. Stencils: Prepared with letter sizes according to ASME A13.1 for piping; minimum letter height of 1-1/4 inches for ducts; and minimum letter height of ¾ inch for access panel and door markers, equipment markers, equipment signs, and similar operational instructions.

1. Stencil Paint: Exterior, gloss, acrylic enamel black, unless otherwise indicated. Paint may be in pressurized spray-can form.

2. Identification Paint: Exterior, acrylic enamel in colors according to ASME A13.1, unless otherwise indicated.

2.4 VALVE TAGS

A. Valve Tags: Stamped or engraved with 1/4 –inch letters for piping system abbreviation and ½-inch numbers, with numbering scheme approved by Owner. Provide 5/32-inch hole for fastener.

1. Material: 0.0375-inch-thick stainless steel.

2. Valve-Tag Fasteners: To match tag material.

2.5 VALVE SCHEDULES

A. Valve Schedules: For each piping system, on standard-size bond paper. Tabulate valve number, piping system, system abbreviation (as shown on valve tag), location of valve (room or space). Mark valves for emergency shutoff and similar special uses.

1. Valve-Schedule Frames: Glazed display frame for removable mounting on masonry walls for each page of valve schedule. Include mounting screws.

2. Frame: Extruded aluminum.

3. Glazing: ASTM C 1036, Type I, Class 1, Glazing Quality B, 2.5-mm, single-thickness glass.

PART 3 EXECUTION

3.1 APPLICATIONS, GENERAL

A. Products specified are for applications referenced in other Division 23 Sections. If more than single-type material, device, or label is specified for listed applications, selection is Installer’s option.

3.2 EQUIPMENT IDENTIFICATION

A. Install and permanently fasten equipment nameplates on each major item of mechanical equipment that does not have nameplate or has nameplate that is damaged or located where not easily visible. Locate nameplates where accessible and visible. Include nameplates for the following general categories of equipment.

1. Pumps and similar motor-driven units.

2. Heat exchangers, coils, evaporators, and similar equipment.

3. Fans, blowers, primary balancing dampers, and mixing boxes.
4. Custom air hardy units.
5. Flow meters.
6. Dust collection unit.

3.3 PIPING IDENTIFICATION

A. Install manufactured pipe markers indicating service on each piping system. Install with flow indication arrows showing direction of flow.

1. Pipes with OD, Including Insulation, Less Than 6 Inches: Self-adhesive pipe markers. Use color-coded, self-adhesive plastic tape, 1-1/2 inches wide, lapped at least 1-1/2 inches at both ends of pipe marker, and covering full circumference of pipe.
2. Pipes with OD, Including Insulation, 6 Inches and Larger: Self-adhesive pipe markers. Use color-coded, self-adhesive plastic tape, at least 1-1/2 inches wide, lapped at least 3 inches at both ends of pipe marker, and covering full circumference of pipe.

B. Stenciled Pipe Marker Option: Stenciled markers may be provided instead of manufactured pipe markers, at Installer's option. Install stenciled pipe markers on each piping system.

1. Identification Paint: Use for contrasting background.
2. Stencil Paint: Use for pipe marking.

C. Locate pipe markers and color bands where piping is exposed in finished spaces; machine rooms; accessible maintenance spaces such as shafts, tunnels, and plenums; and exterior nonconcealed locations as follows:

1. Near each valve and control device.
2. Near each branch connection, excluding short takeoffs for fixtures and terminal units. Where flow pattern is not obvious, mark each pipe at branch.
3. Near penetrations through walls, floors, ceilings, and nonaccessible enclosures.
4. At access doors, manholes, and similar access points that permit view of concealed piping.
5. Near major equipment items and other points of origination and termination.
6. Spaced at maximum intervals of 50 feet along each run, unless otherwise indicated. Reduce intervals to 25 feet in mechanical/plumbing rooms.
7. On piping above removable acoustical ceiling, omit intermediately spaced markers.

3.4 DUCT IDENTIFICATION

A. Stenciled Duct Marker Option: Stenciled markers, showing service and direction of flow for all new ducts shall be provided with lettering 2-inches high for proper identification as supply, return, general exhaust, or dust collection exhaust.

1. Supply – Blue.
2. Return – Green.
3. General Exhaust – Yellow.

4. Duct Collection Exhaust – Red.

B. Locate markers near points where ducts enter into concealed spaces and at maximum intervals of 20 feet for all new ductwork.

3.5 VALVE-TAG INSTALLATION

A. Install tags on valves and control devices in piping systems, except check valves; valves within factory-fabricated equipment units; plumbing fixture supply stops; shutoff valves; faucets; convenience and lawn-watering hose connections; and HVAC terminal devices and similar roughing-in connections of end-use fixtures and units. List tagged valves in a valve schedule. Valve tags shall be minimum 1-1/2 inches round.

3.6 VALVE-SCHEDULE INSTALLATION

A. Mount valve schedule on wall in accessible location in each major equipment room.

3.7 WARNING-TAG INSTALLATION

A. Write required message on, and attach warning tags to equipment and other items where required.

3.8 ADJUSTING

A. Relocate mechanical identification materials and devices that have become visually blocked by other work.

3.9 CLEANING

A. Clean faces of mechanical identification devices and glass frames of valve schedules.

END OF SECTION 230500

SECTION 23 05 93 - TESTING, ADJUSTING, AND BALANCING FOR HVAC

PART 1 - GENERAL

1.1 SECTION REQUIREMENTS

A. Submittals: Certified TAB reports.

B. TAB Firm Qualifications: AABC, NEBB, or TABB certified.

C. TAB Report Forms: Standard TAB contractor's forms approved by Architect.

D. Perform TAB after leakage and pressure tests on air distribution systems have been satisfactorily completed.

1.2 SUMMARY

A. This Section includes TAB to produce design objectives for the following:
   1. Air Systems:
      a. Variable-volume air systems.
   2. Hydronic Piping Systems:
      a. Variable-flow systems.
   3. Grille airflow balancing.
   4. Space pressurization testing and adjusting.
   5. Smoke-control systems testing and adjusting.
   6. Existing conditions verification to insure that system modifications do not affect areas outside scope of work.
   7. Verifying that automatic control devices are functioning properly.
   8. Reporting results of activities and procedures specified in this Section.

1.3 SUBMITTALS

A. Within 15 days from Contractors' Notice to Proceed, submit two copies of evidence that TAB firm and this project's TAB team members meet the qualifications specified in the "Quality Assurance" section.

B. Existing Systems Verification: Within 30 days from Contractor's Notice to Proceed, submit two copies of certified existing systems verification test and balance report.

C. Within 60 days from Contractor's Notice to Proceed, submit two copies of TAB strategies and step-by-step procedures as specified in in Part 3 of this section. Include a complete set of report forms that contractor intends to use on the project.

D. Certified TAB Reports: Submit two copies of reports prepared on approved forms certified by the TAB firm.

1.4 QUALITY ASSURANCE

A. TAB Firm Qualifications: Engage a TAB firm certified by either AABC or NEBB.

B. TAB Conference: Meet with Owners' and Architects' representatives on approval of TAB procedures to develop mutual understanding of test and balance plan. Provide 7 days notice of scheduled meeting time and location. Agenda shall include:
   1. Submittal distribution requirements.
   2. The Contract Documents examination report.
   3. The TAB plan.
   4. Work schedule, project site access requirements.
   5. Coordination of trades and subcontractors.
   6. Coordination of documentation and communication flow.

C. TAB report forms: Use standard forms from AABC's National Standards for Testing and Balancing HVAC Systems" or NEBB's Procedural Standards to Test, Adjust and Balancing of Environmental Systems.

D. Instrumentation Type, Quantity, and Accuracy: Follow AABC and NEEB.

E. Instrumentation Calibration: Calibrate instruments every 6 months or less if recommended by manufacturer. Keep updated record showing date of calibration and name pf party performing calibration.

1.5 COORDINATION

A. Coordinate support of factory-authorized service representatives for systems and equipment, HVAC controls contractors, and other mechanics required to operate the equipment.

B. Provide 7 days advance notice for each test date. Include scheduled test and times.

C. Perform TAB after leakage and pressure tests on air and water systems have been satisfactorily completed.

1.6 GUARANTEE

A. Provide a guarantee on AABC's National Standards for Testing and Balancing of HVAC systems forms stating that AABC will assist in completing requirements of Contract Documents if TAB firm fails to comply with the Contract Documents. Guarantee includes the following provisions:
   1. The certified test and balance firm has tested and balanced systems according to the Contract Documents.
   2. Systems balanced to optimum performance capabilities with design and installation limits.

B. Provide a guarantee on NEBB forms stating that NEBB will assist in completing requirements of the Contract Documents if TAB firm fails to comply with the Contract Documents.

PART 2 - PRODUCTS

PART 3 - EXECUTION

3.1 EXAMINATION

A. Examine the Contract Documents to become familiar with Project requirements and to discover conditions in systems' designs that may preclude proper TAB of systems and equipment.

B. Examine the approved submittals for HVAC systems and equipment.

C. Examine systems for installed balancing devices, such as test ports, gage cocks, thermometer wells, flow-control devices, balancing valves and fittings, and manual volume dampers. Verify that locations of these balancing devices are accessible.

D. Examine system and equipment installations and verify that field quality-control testing, cleaning, and adjusting specified in individual Sections have been performed.

E. Examine HVAC equipment and filters and verify that bearings are greased, belts are aligned and tight, and equipment with functioning controls is ready for operation.

F. Examine equipment performance data including fan and pump curves. Calculate system effect factors when HVAC equipment is installed differently from performance test in factory.

G. Examine the existing HVAC control system components to verify the following:

1. Dampers, valves, and other controlled devices are operated by the intended controller.
2. Dampers and valves are in the position indicated by the controller.
3. Integrity of dampers and valves for free and full operation and for tightness of fully closed and fully open positions.
4. Automatic modulating and shutoff valves, including two-way valves and three-way mixing and diverting valves, are properly connected.
5. Thermostats and humidistats are located to avoid adverse effects of sunlight, drafts, and cold walls.
6. Sensors are located to sense only the intended conditions.
7. Sequence of operation for control modes is according to the Contract Documents.
8. Controller set points are set at indicated values.
9. Interlocked systems are operating.
10. Changeover from heating to cooling mode occurs according to indicated values.
11. Safety interlocks and controls are properly installed.

H. Report deficiencies discovered before and during performance of test and balance procedures.

3.2 PREPARATION

A. Prepare a TAB plan that includes strategies and step-by-step procedures.

B. Complete system readiness checks and prepare system readiness reports. Verify the following:
1. Permanent electrical power wiring is complete.

2. Hydronic systems are filled, clean, and free of air.
3. Automatic temperature-control systems are operational.
4. Equipment and duct access doors are securely closed.
5. Balance, smoke, and fire dampers are open.
6. Isolating and balancing valves are open and control valves are operational.
7. Ceilings are installed in critical areas where air-pattern adjustments are required and access to balancing devices is provided.
8. Windows and doors can be closed so indicated conditions for system operations can be met.

3.3 GENERAL PROCEDURES FOR TESTING AND BALANCING

A. Prepare a Testing and Balancing plan that includes step by step procedures.

B. Perform testing and balancing procedures on each system according to the procedures contained in AABC's National Standards for Testing and Balancing for HVAC Systems or NEBB Procedures and Standards for Testing and Balancing of Environmental Systems.

C. Cut insulation, ducts, pipes, and equipment cabinets for installation of test probes to the minimum extent necessary for TAB procedures. After testing and balancing, patch probe holes in ducts with same material and thickness as used to construct ducts. Install and join new insulation that matches removed materials. Restore insulation, coverings, vapor barrier, and finish.

D. Mark equipment and balancing devices, including damper-control positions, valve position indicators, fan-speed-control levers, and similar controls and devices, with paint or other suitable, permanent identification material to show final settings.

E. Take and report testing and balancing measurements in inch-pound (IP) units.

F. Complete system readiness checks including verifying completion of:
1. Electrical Wiring.
2. Hydronic systems filled, clean, and free of air.
3. Access drawings securely closed.
4. Balance, Fire/Smoke dampers are open.
5. All isolation values open, control values operational.
6. Windows and doors are closed.

3.4 GENERAL PROCEDURES FOR BALANCING AIR SYSTEMS

A. Prepare schematic diagrams of systems' "as-built" duct layouts.

B. Prepare test reports for both fans and outlets/inlets. Obtain manufacturer's outlet factors and recommend testing procedures. Crosscheck the summation of required outlet/inlet volumes with required fan volumes.

C. Measure static pressure at fan inlet, outlet, and as far downstream of the fan as possible.

D. Measure differential pressure across each section of the air handling unit.

E. For variable-air-volume systems, develop a plan to simulate diversity.

F. For variable-speed drive on air handling units, test at 100 percent, 75 percent, and 50 percent flow.

G. Determine the best locations in main and branch ducts for accurate duct airflow measurements.

H. Check airflow patterns from the outside-air louvers and dampers and the return and exhaust-air dampers, through the supply-fan discharge and mixing dampers.

I. Verify that motor starters are equipped with properly sized thermal protection.

J. Check for airflow blockages.

K. Check condensate drains for proper connections and functioning.

L. Check for proper sealing of air-handling unit components.

M. Check for proper sealing of air duct system.

N. Adjust fans to deliver total indicated airflows within the maximum allowable fan speed listed by fan manufacturer:
   1. Measure static pressure across each component that makes up an air-handling unit.
   2. Compare design data with installed conditions to determine variations in design static pressures versus actual static pressures. Compare actual system effect factors with calculated system effect factors to identify where variations occur.
      a. Adjust fan speed higher or lower than design and make required adjustments to pulley sizes, motor sizes, and electrical connections to accommodate fan-speed changes.
   3. Do not make fan-speed adjustments that result in motor overload. Consult equipment manufacturers about fan speed safety factors. Modulate dampers and measure fan-motor amperage to ensure that no overload will occur. Measure amperage in full cooling, full heating, and any other operating modes to determine the maximum required brake horsepower.

O. Adjust volume dampers for main duct, submain ducts, and major branch ducts to indicated airflows within specified tolerances.
   1. Measure static pressure at a point downstream from the balancing damper and adjust volume dampers until the proper static pressure is achieved.
      a. Where sufficient space in submain and branch ducts is unavailable for Pitot-tube traverse measurements, measure airflow at terminal outlets and inlets and calculate the total airflow for that zone.
   2. Re-measure each submain and branch duct after all have been adjusted. Continue to adjust submain and branch ducts to indicated airflows within specified tolerances.

P. Test the air handling units at 100 percent, 75 percent, and 50 percent flow to verify operation of motor.

Q. Re-measure the return airflow to the fan while operating at maximum return airflow and minimum outside airflow. Adjust the fan and balance the return-air ducts and inlets as describes for constant-volume air systems.

R. Measure the diffuser air flow (one per room), at the lower fan speed listed as heating airflow at the most critical air distribution device and adjust the static-pressure controller at the main supply-air sensing station to ensure that adequate static pressure is maintained at the most critical air distribution device.

S. Record the final fan performance data at 75 percent and 50 percent.

T. Determine the minimum speed of the supply fan to meet air flow specified on the Drawings for cooling and heating listed airflow.

U. Record fan speed required to supply the airflow scheduled on the Drawings at dirty filter conditions corresponding to the scheduled maximum total pressure drop on the air handler unit schedule.

3.5 TOLERANCES

A. Set HVAC system airflow and water flow rates within the following tolerances:

1. Supply, and Exhaust Fans and Equipment with Fans: Plus or minus 10 percent.
2. Air Outlets and Inlets: Plus or minus 10 percent.
3. Cooling-Water Flow Rate: Plus or minus 10 percent.

3.6 GENERAL PROCEDURES FOR HYDRONIC SYSTEMS

A. Prepare test reports with pertinent design data and number in sequence starting at pump to end of system. Check the sum of branch-circuit flows against approved pump flow rate. Correct variations that exceed plus or minus 5 percent.

B. Prepare schematic diagrams of systems' "as-built" piping layouts.

C. Prepare hydronic systems for testing and balancing according to the following, in addition to the general preparation procedures specified above:
1. Open all manual valves for maximum flow.
2. Check expansion tank liquid level.
3. Check makeup-water-station pressure gage for adequate pressure for highest vent.
4. Check flow-control valves for specified sequence of operation and set at indicated flow.
5. Set differential-pressure control valves at the specified differential pressure. Do not set at fully closed position when pump is positive-displacement type unless several terminal valves are kept open.
6. Set system controls so automatic valves are wide open to heat exchangers.
7. Check pump-motor load. If motor is overloaded, throttle main flow-balancing device so motor nameplate rating is not exceeded.
8. Check air vents for a forceful liquid flow exiting from vents when manually operated.

3.7 PREPARATION FOR TESTING OF CHILLED WATER SYSTEM

A. Measure water flow at the chiller and chilled water pump. Use the following procedures:

1. Verify impeller size by operating the pump with the discharge valve closed. Read pressure differential across the pump. Convert pressure to head and correct for differences in gage heights. Note the point on manufacturer's pump curve at zero flow and verify that the pump has the intended impeller size.
2. Check system resistance. With all valves open, read pressure differential across the pump and mark pump manufacturer's head-capacity curve. Adjust pump discharge valve until indicated water flow is achieved.
3. Verify pump-motor brake horsepower. Calculate the intended brake horsepower for the system based on pump manufacturer's performance data. Compare calculated brake horsepower with nameplate data on the pump motor. Report conditions where actual amperage exceeds motor nameplate amperage.
4. Report flow rates that are not within plus or minus 5 percent of design.
5. Make adjustments necessary so that pump can deliver 145 gpm of water.

3.8 TESTING OF CHILLED WATER SYSTEM

A. Contractor to test and balance entire chilled water system to insure water flow is properly delivered to each of the three air handling units.

B. Adjust the variable speed drive at the pump to deliver 145 gpm of water from the existing chiller.

C. Modulate the existing isolation valves at the gym AHU to obtain 76 gpm at unit serving Gymnastics Gym.

D. Modulate the existing isolation valves at AHU-5 to obtain 24 gpm at the new air-handling unit that serves the renovated Lobby Area.

E. Modulate the existing isolation valves at the dance floor AHU to obtain 45 gpm at the air handling unit serving the Dance Floor.

F. Controls contactor shall provide additional valves, controls, and components and install where necessary to allow design water flow to be delivered to all three air handling units simultaneously.

G. Test each of the AHU coil flows until listed water flow is obtained.

3.9 PROCEDURES FOR MOTORS

A. Motors, ½ HP and Larger: Test at final balanced conditions and record the following data:
1. Manufacturer, model, and serial numbers.
2. Motor horsepower rating.
3. Motor rpm.
4. Efficiency rating.
5. Nameplate and measured voltage, each phase.
6. Nameplate and measured amperage, each phase.
7. Starter thermal-protection-element rating.

B. Motors Driven by Variable-Frequency Controllers: Test for proper operation at speeds varying from minimum to maximum. Test the manual bypass for the controller to prove proper operation. Record observations, including controller manufacturer, model and serial numbers, and nameplate data.

3.10 PROCEDURES FOR TEMPERATURE MEASUREMENTS

A. During TAB, report the need for adjustment in temperature regulation within the automatic temperature-control system.

B. Measure indoor wet and dry bulb temperatures every other hour for a period of two successive eight-hour days, in each separately controlled zone, to prove correctness of final temperature settings. Measure when the building or zone is occupied.

C. Measure outside-air, wet and dry bulb temperatures.

3.11 PROCEDURES FOR TESTING, ADJUSTING, AND BALANCING EXISTING CHILLER AND ASSOCIATED PUMP

A. Record outside air temperature.

B. Test date and time shall be when outside air temperature is above 88 degrees F if possible.

C. Test time shall be when building is at maximum occupancy.

D. Record the following:
   1. Pump water flow (9pm)
   2. Chilled water supply temperature (F)
   3. Chilled water return temperature (F)
   4. Calculate actual cooling removal (in tons) during this test.
   5. Provide Owner with report and work to obtain within 5% of 60 tons.

3.12 TEMPERATURE-CONTROL VERIFICATION

A. Verify that controllers are calibrated and commissioned.

B. Check transmitter and controller locations and note conditions that would adversely affect control functions.

C. Record controller settings and note variances between set points and actual measurements.

D. Check the operation of limiting controllers (i.e., high and low-temperature controllers).

E. Check free travel and proper operation of control devices such as damper and valve operators.

F. Check the sequence of operation of control devices. Note air pressures and device positions and correlate with airflow and water flow measurements. Note the speed of response to input changes.

G. Check the interaction of electrically operated switch transducers.

H. Check the interaction of interlock and lockout systems.

I. Check main control supply-air pressure and observe compressor and dryer operations.

J. Record voltages of power supply and controller output. Determine whether the system operates on a grounded or nongrounded power supply.

K. Note operation of electric actuators using spring return for proper fail-safe operations.

3.13 FINAL REPORT

A. Air handling units include:
   1. Unit identification.
   2. Location.
   3. Make and type.
   4. Model and unit size.
   5. Manufacturers serial number.
   6. Discharge arrangements.
   7. Sheave make, size and bore.
   8. Number of belts, make and size.
   9. Number of filters, type and size.
   10. Total airflow rate in CFM.
   11. Total system status pressure in inches wg.
   12. Fan rpm.
   13. Discharges static pressure.
   14. Filter differential pressure.
   15. Outside air flow.
   16. Return air flow.
   17. OSA and RA damper positions.

B. Duct Traverse Reports
   1. Location of test.
   2. Duct size.
   3. Duct static pressure.
   4. Duct area.
   5. Air flow rate.
   6. Velocity.

C. Pump Test Reports include the following:
   1. Unit Data
      a. Unit identification.
      b. Location.
      c. Service.
      d. Make and size.
      e. Model and serial numbers.
      f. Water Flow (9pm).
      g. Water differential pressure is psig across pump.
      h. Required net positive suction head for pump.

i. Pump (RPM).
j. Motor make and frame size.
k. Motor HP and RPM.
l. Amperage at each phase.
m. Full load amperage and service factors.
n. Seal type.

2. Test Data (Indicated vs Actual Valves)
   a. Static heat (psig or feet).
   b. Pump shut off pressure (psig).
   c. Actual impeller size (inches).
   d. Full-open flow rate (gpm).
   e. Full-open pressure (psig or feet).
   f. Find suction pressure (psig).
   g. Find total pressure (psig).
   h. Find maximum water flow rate (gpm).
   i. Voltage at each connection.
   j. Amperage at each phase.

D. Existing chiller test reports include the following:
   a. Unit identification.
   b. Location.
   c. Service.
   d. Make and size.
   e. Model and serial numbers.
   f. Water Flow (gpm).
   g. Chilled water entering chiller temperature (degrees F).
   h. Chilled water leaving chiller temperature (degrees F).
   i. Calculated heat removal (tons).
   j. Voltage at each connection.
   k. Amperage at each phase.

3.14 INSPECTIONS

A. Initial Inspection:
   1. After testing and balancing are complete, operate each system and randomly check measurements to verify that the system is operating according to the final test and balance readings documented in the Final Report.
   2. Randomly check the following for each system:
      a. Measure airflow of at least 10 percent of air outlets.
      b. Measure water flow of at least 5 percent of terminals.
      c. Measure room temperature at each thermostat/temperature sensor. Compare the reading to the set point.
      d. Measure sound levels at two locations.
      e. Measure space pressure of at least 10 percent of locations.
      f. Verify that balancing devices are marked with final balance position.
      g. Note deviations to the Contract Documents in the Final Report.

B. Final Inspection:

1. After initial inspection is complete and evidence by random checks verifies that testing and balancing are complete and accurately documented in the final report, request that a final inspection be made by Owner.
2. TAB firm test and balance engineer shall conduct the inspection in the presence of Owner.
3. Owner shall randomly select measurements documented in the final report to be rechecked. The rechecking shall be limited to either 10 percent of the total measurements recorded, or the extent of measurements that can be accomplished in a normal 8-hour business day.
4. If the rechecks yield measurements that differ from the measurements documented in the final report by more than the tolerances allowed, the measurements shall be noted as "FAILED."
5. If the number of "FAILED" measurements is greater than 10 percent of the total measurements checked during the final inspection, the testing and balancing shall be considered incomplete and shall be rejected.
6. TAB firm shall recheck all measurements and make adjustments. Revise the final report and balancing device settings to include all changes and resubmit the final report.
7. Request a second final inspection. If the second final inspection also fails, Owner shall contract the services of another TAB firm to complete the testing and balancing in accordance with the Contract Documents and deduct the cost of the services from the final payment.

END OF SECTION

SECTION 23 07 00 - HVAC INSULATION

PART 1 - GENERAL

1.1 RELATED DOCUMENTS

A. Drawings and general provisions of the Contract, including General and Supplementary Conditions and Division 01 Specification Sections, apply to this Section.

1.2 SUMMARY

A. Section Includes:
   1. Insulation Materials:
      a. Calcium silicate.
      b. Cellular glass.
      c. Flexible elastomeric.
      d. Mineral fiber.
   2. Fire-rated insulation systems.
   3. Insulating cements.
   4. Adhesives.

B. Related Sections:
   1. Division 23 Section “Metal Ducts” for duct liners.

1.3 SUBMITTALS

A. Product Data: For each type of product indicated. Include thermal conductivity, thickness, and jackets (both factory and field applied, if any).

B. Qualification Data: For qualified Installer.

C. Material Test Reports: From a qualified testing agency acceptable to authorities having jurisdiction indicating, interpreting, and certifying test results for compliance of insulation materials, sealers, attachments, cements, and jackets, with requirements indicated. Include dates of tests and test methods employed.

1.4 QUALITY ASSURANCE

A. Installer Qualifications: Skilled mechanics who have successfully completed an apprenticeship program or another craft training program in the field of HVAC insulation applications. Installer shall be a company specializing in HVAC insulation applications with a minimum of 5 years of experience. Insulation shall be installed in a neat, workmanlike manner.

B. Fire-Test-Response Characteristics: Insulation and related materials shall have fire-test response characteristics indicated, as determined by testing identical products per ASTM E 84, by a testing and inspecting agency acceptable to authorities having jurisdiction. Factory label

insulation and jacket materials and adhesive, mastic, tapes, and cement material containers, with appropriate markings of applicable testing and inspecting agency.

1. Insulation Installed Indoors: Flame-spread index of 25 or less, and smoke-developed index of 50 or less.
2. Insulation Installed Outdoors: Flame-spread index of 75 or less, and smoke-developed index of 150 or less.

1.5 DELIVERY, STORAGE, AND HANDLING

A. Packaging: Insulation material containers shall be marked by manufacturer with appropriate ASTM standard designation, type and grade, and maximum use temperature.

1.6 COORDINATION

A. Coordinate size and location of supports, hangers, and insulation shields specified in Division 23 Section “Hangers and Supports for HVAC Piping and Equipment.”

B. Coordinate clearance requirements with piping Installer for piping insulation application, duct Installer for duct insulation application, and equipment Installer for equipment insulation application. Before preparing piping and ductwork Shop Drawings, establish and maintain clearance requirements for installation of insulation and field-applied jackets and finishes and for space required for maintenance.

C. Coordinate installation and testing of heat tracing.

1.7 SCHEDULING

A. Schedule insulation application after pressure testing systems and, where required, after installing and testing heat tracing. Insulation application may begin on segments that have satisfactory test results.

B. Complete installation and concealment of plastic materials as rapidly as possible in each area of construction.

PART 2 - PRODUCTS

2.1 INSULATION MATERIALS

A. Comply with requirements in Part 3 schedule articles for where insulating materials shall be applied.

B. Products shall not contain asbestos, lead, mercury, or mercury compounds.

C. Products that come in contact with stainless steel shall have a leachable chloride content of less than 50 ppm when tested according to ASTM C 871.

D. Insulation materials for use on austenitic stainless steel shall be qualified as acceptable according to ASTM C 795.

E. Foam insulation materials shall not use CFC or HCFC blowing agents in the manufacturing process.

F. Flexible Elastomeric Insulation: Closed-cell, sponge- or expanded-rubber materials. Comply with ASTM C 534, Type I for tubular materials and Type II for sheet materials.
   1. Products: Subject to compliance with requirements, provide one of the following:
      a. Aeroflex USA Inc.; Aerocel.
      b. Armacell LLC; AP Armaflex.
      c. RBX Corporation; Insul-Sheet 1800 and Insul-Tube 180.
      d. Or equal.

G. Mineral-Fiber Blanket Insulation: Mineral or glass fibers bonded with a thermosetting resin. Comply with ASTM C 553, Type II and ASTM C 1290, Type III with factory-applied FSK jacket.
   1. Products: Subject to compliance with requirements, provide one of the following:
      a. CertainTeed Corp.; SoftTouch Duct Wrap.
      b. Johns Manville; Microlite.
      c. Knauf Insulation; Friendly Feel Duct Wrap.
      d. Manson Insulation Inc.; Alley Wrap.
      e. Owens Corning; SOFTR All-Service Duct Wrap.
      f. Or equal.

H. Mineral-Fiber Board Insulation: Mineral or glass fibers bonded with a thermosetting resin. Comply with ASTM C 612, Type IA or Type IB. For duct and plenum applications, provide insulation with factory-applied FSK jacket.
   1. Products: Subject to compliance with requirements, provide one of the following:
      a. CertainTeed Corp.; Commercial Board.
      b. Johns Manville; 800 Series Spin-Glas.
      c. Knauf Insulation; Insulation Board.
      d. Owens Corning; Fiberglas 700 Series.
      e. Or equal.

I. Mineral-Fiber, Preformed Pipe Insulation: Mineral or glass fibers bonded with a thermosetting resin. Comply with ASTM C 547, Type I, Grade A, with factory-applied ASJ-SSL.
   1. Products: Subject to compliance with requirements, provide one of the following:
      a. Johns Manville; Micro-Lok.
      b. Knauf Insulation; 1000-Degree Pipe Insulation.
      c. Owens Corning; Fiberglas Pipe Insulation.
      d. Or equal.

J. Flexible Elastomeric Adhesive: Comply with MIL-A-24179A, Type II, Class I.

   1. Products: Subject to compliance with requirements, available products that may be incorporated into the Work include, but are not limited to, the following:

      a. Aeroflex USA, Inc.; Aeroseal.
      b. Armacell LLC; Armaflex 520 Adhesive.

c. Foster Brand, Specialty Construction Brands, Inc., a business of H. B. Fuller Company; 85-75.
d. K-Flex USA; R-373 Contact Adhesive.
e. Or equal.

2. For indoor applications, adhesive shall have a VOC content of 50 g/L or less when calculated according to 40 CFR 59, Subpart D (EPA Method 24).
3. Adhesive shall comply with the testing and product requirements of the California Department of Health Services' "Standard Practice for the Testing of Volatile Organic Emissions from Various Sources Using Small-Scale Environmental Chambers."

K. Mineral-Fiber Adhesive: Comply with MIL-A-3316C, Class 2, Grade A.

1. Products: Subject to compliance with requirements, provide one of the following:

a. Eagle Bridges - Marathon Industries; 225.
b. Foster Brand, Specialty Construction Brands, Inc., a business of H. B. Fuller Company; 85-60/85-70.
c. Mon-Eco Industries, Inc.; 22-25.
d. Or equal.

2. For indoor applications, adhesive shall have a VOC content of 80 g/L or less when calculated according to 40 CFR 59, Subpart D (EPA Method 24).
3. Adhesive shall comply with the testing and product requirements of the California Department of Health Services' "Standard Practice for the Testing of Volatile Organic Emissions from Various Sources Using Small-Scale Environmental Chambers."

L. Vapor-Barrier Mastic: Water based; suitable for indoor and outdoor use on below ambient services.

1. Products: Subject to compliance with requirements, provide one of the following:

a. Foster Brand, Specialty Construction Brands, Inc., a business of H. B. Fuller Company; 30-80/30-90.
b. Vimasco Corporation; 749.
c. Or equal.

2. Water-Vapor Permeance: ASTM E 96/E 96M, Procedure B, 0.013 perm (0.009 metric perm) at 43-mil (1.09-mm) dry film thickness.
3. Service Temperature Range: Minus 20 to plus 180 degrees F (Minus 29 to plus 82 degrees C).
4. Solids Content: ASTM D 1644, 58 percent by volume and 70 percent by weight.
5. Color: White.

M. Factory-Applied Jackets: When factory-applied jackets are indicated, comply with the following:
1. FSK Jacket: Aluminum-foil, fiberglass-reinforced scrim with kraft-paper backing; complying with ASTM C 1136, Type II.

N. FSK Tape: Foil-face, vapor-retarder tape matching factory-applied jacket with acrylic adhesive; complying with ASTM C 1136.

2.2 ADHESIVES

A. Materials shall be compatible with insulation materials, jackets, and substrates and for bonding insulation to itself and to surfaces to be insulated, unless otherwise indicated.

B. Flexible Elastomeric Adhesive: Comply with MIL-A-24179A, Type II, Class I.
   1. Products: Subject to compliance with requirements, provide one of the following:
      a. Aeroflex USA Inc.; Aeroseal.
      b. Armacell LCC; 520 Adhesive.
      c. Foster Products Corporation, H.B. Fuller Company; 85-75.
      d. RBX Corporation; Rubatex Contact Adhesive.

C. Mineral-Fiber Adhesive: Comply with MIL-A-3316C, Class 2, Grade A.
   1. Products: Subject to compliance with requirements, provide one of the following:
      a. Childers Products, Division of ITW; CP-82.
      b. Foster Products Corporation, H.B. Fuller Company; 85-20.
      c. ITW TACC, Division of Illinois Tool Works; S-90/80.
      d. Marathon Industries, Inc.; 225.
      e. Mon-Eco Industries, Inc.; 22-25.

D. ASJ Adhesive, and FSK and PVDC Jacket Adhesive: Comply with MIL-A-3316C, Class 2, Grade A for bonding insulation jacket lap seams and joints.
   1. Products: Subject to compliance with requirements, provide one of the following:
      a. Childers Products, Division of ITW; CP-82.
      b. Foster Products Corporation, H.B. Fuller Company; 85-20.
      c. ITW TACC, Division of Illinois Tool Works; S-90/80.
      d. Marathon Industries, Inc.; 225.
      e. Mon-Eco Industries, Inc.; 22-25.

E. PVC Jacket Adhesive: Compatible with PVC jacket.
   1. Products: Subject to compliance with requirements, provide one of the following:
      a. Dow Chemical Company (The); 739, Dow Silicone.
      b. Johns-Manville; Zeston Perma-Weld, CEEL-TITE Solvent Welding Adhesive.
      c. P.I.C. Plastics, Inc.; Welding Adhesive.
      d. Red Devil, Inc.; Celulon Ultra Clear.
      e. Speedline Corporation; Speedline Vinyl Adhesive.

PART 3 - EXECUTION

3.1 INSULATION INSTALLATION

A. Comply with requirements of the Midwest Insulation Contractors Association's "National Commercial & Industrial Insulation Standards" for insulation installation on pipes and equipment.

B. Insulation Installation at Interior Wall and Partition Penetrations (That Are Not Fire Rated): Install insulation continuously through walls and partitions.

C. Insulation Installation at Fire-Rated Wall and Partition Penetrations: Terminate insulation at fire damper sleeves for fire-rated wall and partition penetrations. Externally insulate damper sleeves to match adjacent insulation and overlap duct insulation at least 2 inches (50 mm).

D. Insulation Installation at Floor Penetrations:

1. Duct: For penetrations through fire-rated assemblies, terminate insulation at fire damper sleeves and externally insulate damper sleeve beyond floor to match adjacent duct insulation. Overlap damper sleeve and duct insulation at least 2 inches (50 mm).
2. Seal penetrations through fire-rated assemblies.

E. Flexible Elastomeric Insulation Installation:

1. Seal longitudinal seams and end joints with adhesive to eliminate openings in insulation that allow passage of air to surface being insulated.
2. Insulation Installation on Pipe Fittings and Elbows: Install mitered sections of pipe insulation. Secure insulation materials and seal seams with adhesive to eliminate openings in insulation that allow passage of air to surface being insulated.

F. Mineral-Fiber Insulation Installation:

1. Insulation Installation on Straight Pipes and Tubes: Where vapor barriers are indicated, seal longitudinal seams, end joints, and protrusions with vapor-barrier mastic and joint sealant.
2. For insulation with factory-applied jackets on above ambient surfaces, secure laps with outward clinched staples at 6 inches (150 mm) o.c.
3. For insulation with factory-applied jackets on below ambient surfaces, do not staple longitudinal tabs but secure tabs with additional adhesive as recommended by insulation material manufacturer and seal with vapor-barrier mastic and flashing sealant.
4. Blanket and Board Insulation Installation on Ducts and Plenums: Secure with adhesive and insulation pins.
5. For ducts and plenums with surface temperatures below ambient, install a continuous unbroken vapor barrier.

G. Plenums and Ducts Requiring Insulation:

1. Concealed and exposed supply air.
2. Concealed and exposed return air located in non-conditioned space.
3. Concealed and exposed exhaust between isolation damper and penetration of building exterior.

H. Plenums and Ducts Not Insulated:

1. Metal ducts with duct liner.
2. Factory-insulated plenums and casings.
3. Flexible connectors.
4. Vibration-control devices.
5. Factory-insulated access panels and doors.

I. Piping Not Insulated: Unless otherwise indicated, do not install insulation on the following:

1. Drainage piping located in crawlspaces.
2. Underground piping.

3.2 DUCT AND PLENUM INSULATION SCHEDULE

A. Concealed duct insulation shall be the following:

1. Mineral-Fiber Blanket: 2 inches (50 mm) thick and 1.5-lb/cu. ft. (24-kg/cu. m) nominal density.

B. Exposed duct insulation shall be the following:

1. Mineral-Fiber Board: 2 inches (50 mm) thick and 3-lb/cu. ft. (48-kg/cu. m) nominal density.

3.3 HVAC PIPING INSULATION SCHEDULE

A. Refrigerant Suction and Hot-Gas Piping: Insulation shall be the following:

1. Flexible Elastomeric: 1 inch (25 mm) thick.

B. Refrigerant Suction and Hot-Gas Flexible Tubing: Insulation shall be the following:

1. Flexible Elastomeric: 1 inch (25 mm) thick.

END OF SECTION

SECTION 23 09 00 - INSTRUMENTATION AND CONTROL FOR HVAC

PART 1 - GENERAL

1.1 SUMMARY

A. This section includes control equipment for HVAC systems and components. The existing HVAC control panel is located in mechanical room 104 and is the master controller of all HVAC equipment. The existing HVAC control panel will communicate with a new application specific controller provided with the new chilled water air handling unit AHU-5. Provide software and hardware to allow HVAC Control Panel to have a user interface at the Owner's operator workstation. Communication protocol shall be BACNET compatible.

1.2 DEFINITIONS

A. AHU: Air Handling Unit

B. AI: Analog Input

C. AO: Analog Output

D. CS: Current Sensor

E. DDC: Direct Digital Control

F. DI: Discreet Input

G. DO: Discreet Output

H. DP: Differential Pressure Sensor

I. EXF: Exhaust Fan

J. I/O: Input/Output

K. LonWorks: A control network technology platform for designing and implementing interoperable control devices and networks.

L. PC: Personal Computer

M. PID: Proportional plus integral derivative.

N. RH: Relative Humidity Sensor

O. SD: Smoke Detector

P. T: Temperature Sensor

Q. VFD: Variable Frequency Drive.

1.3 SYSTEM PERFORMANCE

A. Comply with the following performance requirements:
   1. Reporting Accuracy and Stability of Control: Report values and maintain measured variables within tolerances as follows:
      a. Space Temperature: Plus or minus 1 degree F.
      b. Outside Air Temperature: Plus or minus 2 degrees F.
      c. Relative Humidity: Plus or minus 5 percent.
      d. Water Temperature: Plus or minus 1 degree F.
      e. Water Pressure: Plus or minus 2 psi.

1.4 SUBMITTALS

A. Product Data: Include manufacturer's technical literature for each control device. Indicate dimensions, capacities, performance characteristics, electrical characteristics, finishes for materials, and installation and startup instructions for each type of product indicated.
   1. DDC System Hardware: Bill of materials of equipment indicating quantity, manufacturer, and model number. Include technical data for operator workstation equipment, interface equipment, control units, transducers/transmitters, sensors, actuators, valves, relays/switches, control panels, and operator interface equipment.
   2. Control System Software: Include technical data for operating system software, operator interface, color graphics, and other third-party applications.
   3. Controlled Systems: Instrumentation list with element name, type of device, manufacturer, model number, and product data. Include written description of sequence of operation including schematic design.

B. Shop Drawings: Detail equipment assemblies and indicate dimensions, weights, loads, required clearances, method of field assembly, components, and location and size of each field connection.
   1. Bill of materials of equipment indicating quantity, manufacturer, and model number.
   2. Schematic flow diagrams showing fans, filters, coils, dampers, valves, and control devices.
   3. Wiring Diagrams: Power, signal, and control wiring.
   4. Written description of sequence of operation.
   5. Schedule of dampers including size, leakage, and flow characteristics.
   6. Schedule of valves including flow characteristics.
   7. DDC System Hardware:
      a. Wiring diagrams for control units with termination numbers.
      b. Schematic diagrams and floor plans for field sensors and control hardware.
      c. Schematic diagrams for control, communication, and power wiring, showing trunk data conductors and wiring between operator workstation and control unit locations.
   8. Control System Software: Provide description of any new software required to interface the new equipment controls with the existing HVAC control panel.
   9. Controlled Systems:
      a. Schematic diagrams of each controlled system with control points labeled and control elements graphically shown, with wiring.
      b. Scaled drawings showing mounting, routing, and wiring of elements including bases and special construction.
      c. Written description of sequence of operation including schematic diagram.

d. Points list.

C. Data Communications Protocol Certificates: Certify that each proposed DDC system component complies with ASHRAE 135.

D. Data Communications Protocol Certificates: Certify that each proposed DDC system component is compatible with existing communications protocol at Owner's workstation.

E. Operation and Maintenance at Existing HVAC Control Panel Data: For HVAC instrumentation and control system to include in emergency, operation, and maintenance manuals.

1.5 QUALITY ASSURANCE

A. Installer Qualifications: Automatic control system manufacturer's authorized representative who is trained and approved for installation of system components required for this Project.

B. Electrical Components, Devices, and Accessories: Listed and labeled as defined in NFPA 70, Article 100, by a testing agency acceptable to authorities having jurisdiction, and marked for intended use.

PART 2 - PRODUCTS

2.1 CONTROL SYSTEM

A. Manufacturers:
1. Johnson Controls Corporation (must be compatible with existing HVAC control system)
2. Trane (must be compatible with existing HVAC control system)
3. KMC.

2.2 DDC EQUIPMENT

A. Operator Workstation: PC-based microcomputer (Owner's specified location).
1. Application Software:
a. I/O capability from operator station.
b. System security for each operator via software password and access levels.
c. Automatic system diagnostics; monitor system and report failures.
d. Alarm processing, messages, and reactions.

B. Control Units: Modular, comprising processor board with programmable, nonvolatile, random-access memory; local operator access and display panel; integral interface equipment; and backup power source.
1. Units monitor or control each I/O point; process information; execute commands from other control units, devices, and operator stations; and download from or upload to operator workstation or diagnostic terminal unit.
2. Standard Application Programs:
a. HVAC Control Programs: Optimal run time.
b. Programming Application Features: Include trend point; alarm processing and messaging; weekly, monthly, and annual scheduling; energy calculations; run-time totalization; and security access.
c. Remote communications.

d. Maintenance management.
e. Units of Measure: Inch-pound and SI (metric).

3. Local operator interface provides for download from or upload to operator workstation or diagnostic terminal unit.

2.3 APPLICATION SPECIFIC CONTROLLERS PROVIDED WITH AHU-5

A. Unitized, capable of stand-alone operation with sufficient memory to support its operating system, database, and programming requirements, and with sufficient I/O capacity for the application.

1. Configuration: Local keypad and display; diagnostic LEDs for power, communication, and processor; wiring termination to terminal strip or card connected with ribbon cable; memory with bios; and 72-hour battery backup.
2. Operating System: Manage I/O communication to allow distributed controllers to share real and virtual object information and allow central monitoring and alarms. Perform scheduling with real-time clock. Perform automatic system diagnostics; monitor system and report failures.
3. ASHRAE 135 Compliance: Communicate using read (execute and initiate) and write (execute and initiate) property services defined in ASHRAE 135. Reside on network using MS/TP datalink/physical layer protocol and have service communication port for connection to diagnostic terminal unit.
4. Communications Protocol Compliance: Control units shall use existing communications protocol and communicate with existing workstation and/or other network controllers through existing communications protocol or BACNET.
5. Enclosure:
   a. Dustproof rated for operation at 32 to 120 degrees F.
   b. Waterproof rated for operation at 40 to 150 degrees F.

2.4 ANALOG CONTROLLER

A. Step Controllers: 6 or 10 stage type, with heavy-duty switching rated to handle loads and operated by electric motor.

B. Electric, Outdoor-Reset Controllers: Remote-bulb or bimetal rod-and-tube type, proportioning action with adjustable throttling range, adjustable set point, scale range minus 10 to plus 70 degrees F, and single or double-pole contacts.

C. Electronic Controllers: Wheatstone-bridge-amplifier type, in steel enclosure with provision for remote-resistance readjustment. Identify adjustments on controllers, including proportional band and authority.

1. Single controllers can be integral with control motor if provided with accessible control readjustment potentiometer.

D. Fan-Speed Controllers: Solid-state model providing field-adjustable proportional control of motor speed from maximum to minimum of 55 percent and on-off action below minimum fan speed. Controller shall briefly apply full voltage, when motor is started, to rapidly bring motor up to minimum speed. Equip with filtered circuit to eliminate radio interference.

2.5 ELECTRONIC SENSORS

A. Thermistor Temperature Sensors and Transmitters:

1. Accuracy: Plus or minus 0.5 degrees F at calibration point.
2. Wire: Twisted, shielded-pair cable.
3. Insertion Elements in Ducts: Single point, 8 inches long; use where not affected by temperature stratification or where ducts are smaller than 9 SF.
4. Averaging Elements in Ducts: 36 inches long, flexible; use where prone to temperature stratification or where ducts are larger than 10 SF.
5. Insertion Elements for Liquids: Brass or stainless-steel socket with minimum insertion length of 2-1/2 inches.
6. Room Sensor Cover Construction: Manufacturer's standard locking covers.
   a. Set-Point Adjustment: Concealed.
   b. Set-Point Indication: Exposed.
   c. Thermometer: Exposed, LCD readout.
7. Outside-Air Sensors: Watertight inlet fitting, shielded from direct sunlight.
8. Room Security Sensors: Stainless-steel cover plate with insulated back and security screws.

B. Humidity Sensors: Bulk polymer sensor element.
1. Accuracy: 2 percent full range with linear output.
2. Room Sensor Range: 20 to 80 percent relative humidity.
3. Room Sensor Cover Construction: Manufacturer's standard locking covers.
   a. Set-Point Adjustment: Concealed.
   b. Set-Point Indication: Exposed.
   c. Hygrometer: Exposed LCD readout.
4. Duct Sensor: 20 to 80 percent relative humidity range with element guard and mounting plate.
5. Outside-Air Sensor: 20 to 80 percent relative humidity range with mounting enclosure, suitable for operation at design outdoor temperatures plus 10 degrees F, minus 20 degrees F.
6. Duct and Sensors: With element guard and mounting plate, range of 0 to 100 percent relative humidity.

C. Pressure Transmitters/Transducers:
1. Differential-Pressure Switch (Air or Water): Snap acting, with pilot-duty rating and with suitable scale range and differential.

2.6 STATUS SENSORS

A. Status Inputs for Electric Motors: Comply with ISA 50.00.01, current-sensing fixed or split-core transformers with self-powered transmitter, adjustable and suitable for 175 percent of rated motor current.

2.7 ACTUATOR

A. Electric Motors: Size to operate with sufficient reserve power to provide smooth modulating action or two-position action.
1. Permanent Split-Capacitor or Shaded-Pole Type: Gear trains completely oil immersed and sealed. Equip spring-return motors with integral spiral-spring mechanism in housings designed for easy removal for service or adjustment of limit switches, auxiliary switches, or feedback potentiometer.
2. Nonspring-Return Motors for Valves Larger Than NPS 2-1/2 (DN 65): Size for running torque of 150 inch x lbf and breakaway torque of 300 inch x lbf.
3. Spring-Return Motors for Valves Larger Than NPS 2-1/2 (DN 65): Size for running and breakaway torque of 150 inch x lbf.

4. Nonspring-Return Motors for Dampers Larger Than 25 SF: Size for running torque of 150 inch x lbf and breakaway torque of 300 inch x lbf.
5. Spring-Return Motors for Dampers Larger Than 25 SF: Size for running and breakaway torque of 150 inch x lbf.

B. Electronic Actuators: Direct-coupled type designed for minimum 60,000 full-stroke cycles at rated torque.
1. Manufacturers:
   a. Belimo Aircontrols (USA), Inc.
   b. Or Equal.
2. Dampers: Size for running torque calculated as follows:
   a. Parallel-Blade Damper with Edge Seals: 7 inch-lb/SF of damper.
   b. Opposed-Blade Damper with Edge Seals: 5 inch-lb/SF of damper.
   c. Parallel-Blade Damper without Edge Seals: 4 inch-lb/SF of damper.
   d. Opposed-Blade Damper without Edge Seals: 3 inch-lb/SF of damper.
   e. Dampers with 2 to 3 inch wg of Pressure Drop or Face Velocities of 1000 to 2500 fpm: Increase running torque by 1.5.
   f. Dampers with 3 to 4 inch wg of Pressure Drop or Face Velocities of 2500 to 3000 fpm: Increase running torque by 2.0.
3. Power Requirements (Two-Position Spring Return): 120-V ac.
4. Power Requirements (Modulating): Maximum 10 VA at 24-V ac or 8 W at 24-V dc.

2.8 DAMPERS

A. Dampers: AMCA-rated, opposed-blade design; 0.108 inch minimum thick, galvanized-steel or 0.125 inch minimum thick, extruded-aluminum frames with holes for duct mounting; damper blades shall not be less than 0.064 inch thick galvanized steel with maximum blade width of 8 inches and length of 48 inches.
1. Secure blades to ½ inch diameter, zinc-plated axles using zinc-plated hardware, with nylon blade bearings, blade-linkage hardware of zinc-plated steel and brass, ends sealed against spring-stainless-steel blade bearings, and thrust bearings at each end of every blade.
2. Operating Temperature Range: From minus 40 to plus 200 degrees F.
3. Edge Seals, Low-Leakage Applications: Use inflatable blade edging or replaceable rubber blade seals and spring-loaded stainless-steel side seals, rated for leakage at less than 10 cfm per SF of damper area, at differential pressure of 4 inch wg when damper is held by torque of 50 inch x lbf; when tested according to AMCA 500D.

2.9 CONTROL CABLE

A. Control wiring and conduits are specified in Division 26.

PART 3 - EXECUTION

3.1 EXAMINATION

A. Verify that power supply is available to control units and operator workstation.

3.2 INSTALLATION

A. Install control wiring concealed, except in mechanical rooms, and according to requirements specified in Division 26 Sections.

B. Install software in control units and operator workstation(s). Implement all features of programs to specified requirements and as appropriate to sequence of operation.

C. Connect and configure equipment and software to achieve sequence of operation specified.

D. Verify location of thermostats, humidistats, and other exposed control sensors with Drawings and room details before installation. Install devices 48 inches above the floor.
   1. Install averaging elements in ducts and plenums in crossing or zigzag pattern.

E. Install labels and nameplates to identify control components.

3.3 ELECTRICAL WIRING AND CONNECTION INSTALLATION

A. Connect hand-off-auto selector switches to override automatic interlock controls when switch is in hand position.

3.4 FIELD QUALITY CONTROL

A. Manufacturer's Field Service: Engage a factory-authorized service representative to inspect, field-assembled components and equipment installation, including connections. Report results in writing.

B. Perform the following field tests and inspections and prepare test reports:
   1. Operational Test: After electrical circuitry has been energized, start units to confirm proper unit operation. Remove and replace malfunctioning units and retest.
   2. Test and adjust controls and safeties.
   3. Test each point through its full operating range to verify that safety and operating control set points are as required.
   4. Test each control loop to verify stable mode of operation and compliance with sequence of operation. Adjust PID actions.
   5. Test each system for compliance with sequence of operation.

C. DDC Verification:
   1. Verify that instruments are installed before calibration, testing, and loop or leak checks.
   2. Check instruments for proper location and accessibility.
   3. Check instrument installation for direction of flow, elevation, orientation, insertion depth, and other applicable considerations.
   4. Check instrument tubing for proper fittings, slope, material, and support.
   5. Check flow instruments. Inspect tag number and line and bore size, and verify that inlet side is identified and that meters are installed correctly.
   6. Check pressure instruments, piping slope, installation of valve manifold, and self-contained pressure regulators.
   7. Check temperature instruments and material and length of sensing elements.
   8. Check control valves. Verify that they are in correct direction.

9. Check air-operated dampers. Verify that pressure gages are provided and that proper blade alignment, either parallel or opposed, has been provided.
10. Check DDC system as follows:
    a. Verify that DDC controller power supply is from emergency power supply, if applicable.
    b. Verify that wires at control panels are tagged with their service designation and approved tagging system.
    c. Verify that spare I/O capacity has been provided.
    d. Verify that DDC controllers are protected from power supply surges.
    e. Verify HVAC control panel properly communicates with Fire Alarm panel.

3.5 ADJUSTING

A. Calibrating and Adjusting:
1. Control System Inputs and Outputs:
    a. Check analog inputs at 0, 50, and 100 percent of span.
    b. Check analog outputs using milliampere meter at 0, 50, and 100 percent output.
    c. Check digital inputs using jumper wire.
    d. Check digital outputs using ohmmeter to test for contact making or breaking.
    e. Check resistance temperature inputs at 0, 50, and 100 percent of span using a precision-resistant source.
2. Pressure:
    a. Calibrate pressure transmitters at 0, 50, and 100 percent of span.
    b. Calibrate pressure switches to make or break contacts, with adjustable differential set at minimum.
3. Temperature:
    a. Calibrate resistance temperature transmitters at 0, 50, and 100 percent of span using a precision-resistance source.
    b. Calibrate temperature switches to make or break contacts.
4. Stroke and adjust control valves and dampers without positioners, following the manufacturer's recommended procedure, so that valve or damper is 100 percent open and closed.
5. Stroke and adjust control valves and dampers with positioners, following manufacturer's recommended procedure, so that valve and damper is 0, 50, and 100 percent closed.
6. Provide diagnostic and test instruments for calibration and adjustment of system.
7. Provide written description of procedures and equipment for calibrating each type of instrument. Submit procedures review and approval before initiating startup procedures.

3.6 DEMONSTRATION

A. Engage a factory-authorized service representative to train Owner's maintenance personnel to adjust, operate, and maintain HVAC instrumentation and controls.

END OF SECTION

SECTION 23 21 13 - HYDRONIC PIPING

PART 1 - GENERAL

1.1 SUMMARY

A. This Section includes pipe and fitting materials, joining methods, special-duty valves, and specialties for the following:

1. Condensate-drain piping.

2. Chilled-water piping.

1.2 PERFORMANCE REQUIREMENTS

A. Hydronic piping components and installation shall be capable of withstanding the following minimum working pressure and temperature:

1. Condensate-Drain Piping: 150 degrees F (66 degrees C).

2. Chilled-Water Piping: 160 psig (1103kPa) at 60 degrees F.

3. Condensate-Drain Piping: 150 degrees F.

1.3 SUBMITTALS

A. Product Data: For each type of the following:
1. Plastic pipe and fittings with solvent cement.
2. Pressure-seal fittings.
3. Valves. Include flow and pressure drop curves based on manufacturer's testing for calibrated-orifice balancing valves and automatic flow-control valves.
4. Air control devices.
5. Hydronic specialties

B. Shop Drawings: Detail, at ¼ (1:50) scale, the piping layout, fabrication of pipe anchors, hangers, supports for multiple pipes, alignment guides, expansion joints and loops, and attachments of the same to the building structure. Detail location of anchors, alignment guides, and expansion joints and loops.

C. Welding certificates.

D. Qualification Data: For Installer.

E. Field quality-control test reports.

F. Operation and Maintenance Data: For air control devices, hydronic specialties, and special-duty valves to include in emergency, operation, and maintenance manuals.

G. Water Analysis: Submit a copy of the water analysis to illustrate water quality available at Project Site.

1.4 QUALITY ASSURANCE

A. Coordinate layout and installation of hydronic piping and suspension system components with other construction, including light fixtures, HVAC ductwork and equipment, fire-suppression-system components, and partition assemblies.

B. Coordinate pipe fitting pressure classes with products specified in related Sections.

C. Coordinate installation of pipe sleeves for penetrations through exterior walls and floor assemblies. Coordinate with requirements for firestopping specified for fire and smoke wall and floor assemblies.

PART 2 - PRODUCTS

2.1 COPPER TUBE AND FITTINGS

A. Drawn-Temper Copper Tubing: ASTM B 88, Type L (ASTM B 88M, Type B).

B. DWV Copper Tubing: ASTM B 306, Type DWV.

C. Wrought-Copper Fittings: ASME B16.22.
   1. Manufacturers: Subject to compliance with requirements, provide products by one of the following:
      a. Anvil International, Inc.
      b. Victaulic Company of America.

D. Wrought-Copper Unions: ASME B16.22.

2.2 PLASTIC PIPE AND FITTINGS

A. PVC Plastic Pipe: ASTM D 1785, Schedules 40 and 80, plain ends as indicated in Part 3 "Piping Applications" Article.

B. PVC Plastic Pipe Fittings: Socket-type pipe fittings, ASTM D 2466 for Schedule 40 pipe; ASTM D 2467 for Schedule 80 pipe.

C. PVC Solvent Cement: ASTM D 2564.

2.3 JOINING MATERIALS

A. Plastic, Bolts, and Nuts: Type and material recommended by piping system manufacturer, unless otherwise indicated.

B. Pipe-Flange Gasket Materials: Suitable for chemical and thermal conditions of piping system contents.

C. Solder Filler Metals: ASTM B 32, lead-free alloys. Include water-flushable flux according to ASTM B 813.

D. Welding Filler Metals: Comply with AWS D10.12/D10.12M for welding materials appropriate for wall thickness and chemical analysis of steel pipe being welded.

E. Brazing Filler Metals: AWS A5.8, BCuP Series, copper-phosphorus alloys for joining copper with copper; or Bag-1, silver alloy for joining copper with bronze or steel.

F. Gasket Material: Thickness, material, and type suitable for fluid to be handles and working temperatures and pressures.

G. Solvent Cements for Joining Plastic Piping:

1. PVC Piping: ASTM D 2564. Include primer according to ASTM F 656.

a. PVC solvent cement shall have a VOC content of 510 g/L or less when calculated according to 40 CFR 59, Subpart D (EPA Method 24).
b. Adhesive primer shall have a VOC content of 550 g/L or less when calculated according to 40 CFR 59, Subpart D (EPA Method 24).
c. Solvent cement and adhesive primer shall comply with the testing and product requirements of the California Department of Health Services' "Standard Practice for the Testing of Volatile Organic Emissions from Various Sources Using Small-Scale Environmental Chambers."

2.4 TRANSITION FITTINGS

A. Plastic-to-Metal Transition Fittings:

1. Manufacturers: Subject to compliance with requirements, provide products by one of the following:

a. Charlotte Pipe and Foundry Company.
b. IPEX Inc.
c. KBi.

2. CPVC and PVC one-piece fitting with one threaded brass or copper insert and one Schedule 80 solvent-cement-joint end.

B. Plastic-to-Metal Transition Unions:

1. Manufacturers: Subject to compliance with requirements, provide products by one of the following:

a. Charlotte Pipe and Foundry Company.
b. IPEX Inc.
c. KBi.
d. NIBCO INC.

2. MSS SP-107, CPVC and PVC union. Include brass or copper end, Schedule 80 solvent-cement-joint end, rubber gasket, and threaded union.

2.5 VALVES

A. Bronze, Calibrated-Orifice, Balancing Valves:
   1. Manufacturers: Subject to compliance with requirements, provide products by one of the following:
      a. Armstrong Pumps, Inc.
      b. Bell & Gossett Domestic Pump; a division of ITT Industries.
      c. Flow Design Inc.
      d. Gerand Engineering Co.
      e. Griswold Controls.
      f. Taco.
   2. Body: Bronze, ball or plug type with calibrated orifice or venture.
   3. Ball: Brass or stainless steel.
   4. Plug: Resin.
   5. Seat: PTFE.
   6. End Connections: Threaded or socket.
   7. Pressure Gage Connections: Integral seals for portable differential pressure meter.
   8. Handle Style: Lever, with memory stop to retain set position.
   9. CWP Rating: Minimum 125 psig.
   10. Maximum Operating Temperature: 250 degrees F.

B. Class 150, Two-Piece, Full-Port, Bronze Ball Valves with Stainless-Steel Trim:

   1. Manufacturers: Subject to compliance with requirements, provide products by one of the following:

      a. Conbraco Industries, Inc.; Apollo Valves.
      b. Hammond Valve. Milwaukee Valve Company.
      c. NIBCO INC.
      d. Watts Regulator Co.; a division of Watts Water Technologies, Inc.

   2. Body: Forged or cast brass.
   3. Connections: Threaded with union inlet.
   4. Valve: Nickel-plated brass ball with EPDM O-rings behind the seals.
   5. Size: NPS 2" and smaller.
   6. Minimum CWP Rating: 275 psig.
   7. Maximum Operating Temperature: 250 degrees F.

C. Isolation Union:

   1. Manufacturers: Subject to compliance with requirements, provide products by one of the following:

      a. Flow Design Inc.
      b. Griswold Controls.

   2. Body: Forged or cast brass.

3. Connections: Threaded.
4. Union: Provide union with four ¼” body tappings with brass end connections. Union seal shall be EPDM O-rings. Provide a pressure/temperature test plug.
5. Size: NPS 2" and smaller.
6. Minimum CWP Rating: 275 psig.
7. Maximum Operating Temperature: 250 degrees F.

2.6 AIR CONTROL DEVICES

A. Manufacturers: Subject to compliance with requirements, provide products by one of the following:
1. Amtrol, Inc.
2. Armstrong Pumps, Inc.
3. Bell & Gossett Domestic Pump; a division of ITT Industries.
4. Taco.

B. Manual Air Vents:
1. Body: Bronze.
2. Internal Parts: Nonferrous.
3. Operator: Screwdriver or thumbscrew.
4. Inlet Connection: NPS ½ (DN 15).
5. Discharge Connection: NPS 1/8 (DN 6).
6. CWP Rating: 150 psig (1035 kPa).
7. Maximum Operating Temperature: 225 degrees F.

2.7 HYDRONIC PIPING SPECIALTIES

A. Y-Pattern Strainers:
1. Body: ASTM A 126, Class B, cast iron with bolted cover and bottom drain connection.
2. End Connections: Threaded ends for NPS 2 (DN 50) and smaller; flanged ends for NPS 2-1/2 (DN 65) and larger.
3. Strainer Screen: 60-mesh startup strainer, and perforated stainless-steel basket with 50 percent free area.
4. CWP Rating: 125 psig (860 kPa).

B. Basket Strainers:
1. Body: ASTM A 126, Class B, high-tensile cast iron with bolted cover and bottom drain connection.
2. End Connections: Threaded ends for NPS 2 (DN 50) and smaller; flanged ends for NPS 2-1/2 (DN 65) and larger.
3. Strainer Screen: 60-mesh startup strainer, and perforated stainless-steel basket with 50 percent free area.
4. CWP Rating: 125 psig (860 kPa).

C. T-Pattern Strainers:
1. Body: Ductile or malleable iron with removable access coupling and end cap for strainer maintenance.
2. End Connections: Grooved ends.

3. Strainer Screen: 60-mesh startup strainer, and perforated stainless-steel basket with 57 percent free area.
4. CWP Rating: 750 psig (5170 kPa).

D. Spherical, Rubber, Flexible Connectors:
1. Body: Fiber-reinforced rubber body.
2. End Connections: Steel flanges drilled to align with Classes 150 and 300 steel flanges.
3. Performance: Capable of misalignment.
4. CWP Rating: 150 psig (1035 kPa).
5. Maximum Operating Temperature: 250 degrees F.

PART 3 - EXECUTION

3.1 PIPING APPLICATIONS

A. Condensate-Drain Piping: Type L (B), drawn-temper copper tubing, wrought-copper fittings, and soldered joints or Schedule 40 PVC plastic pipe and fittings and solvent-welded joints.

B. Air-Vent Piping:
1. Inlet: Same as service where installed with metal-to-plastic transition fittings for plastic piping systems according to the piping manufacturer's written instructions.
2. Outlet: Type K (A), annealed-temper copper tubing with soldered or flared joints.

3.2 VALVE APPLICATIONS

A. Install shutoff-duty valves at each branch connection to supply mains, and at supply connection to each piece of equipment.

B. Install calibrated-orifice, balancing valves at each branch connection to return main.

C. Install calibrated-orifice, balancing valves in the return pipe of each heating or cooling terminal.

D. Install check valves at each pump discharge and elsewhere as required to control flow direction.

E. Install pressure-reducing valves at makeup-water connection to regulate system fill pressure.

3.3 PIPING INSTALLATIONS

A. Drawing plans, schematics, and diagrams indicate general location and arrangement of piping systems. Indicate piping locations and arrangements if such were used to size pipe and calculate friction loss, expansion, pump sizing, and other design considerations. Install piping as indicated unless deviations to layout are approved on Coordination Drawings.

B. Install piping in concealed locations unless otherwise indicated and except in equipment rooms and service areas.

C. Install piping indicated to be exposed and piping in equipment rooms and service areas at right angles or parallel to building walls. Diagonal runs are prohibited unless specifically indicated otherwise.

D. Install piping above accessible ceilings to allow sufficient space for ceiling panel removal.

E. Install piping to permit valve servicing.

F. Install piping at indicated slopes.

G. Install piping free of sags and bends.

H. Install fittings for changes in direction and branch connections.

I. Install piping to allow application of insulation.

J. Select system components with pressure rating equal to or greater than system operating pressure.

K. Install groups of pipes parallel to each other, spaced to permit applying insulation and servicing of valves.

L. Install drains, consisting of a tee fitting, NPS 3/4 (DN 20) ball valve, and short NPS 3/4 (DN 20) threaded nipple with cap, at low points in piping system mains and elsewhere as required for system drainage.

M. Install piping at a uniform slope of 0.2 percent upward in the direction of flow.

N. Reduce pipe sizes using eccentric reducer fitting installed with level side up.

O. Unless otherwise indicated, install branch connections to mains using tee fittings in main pipe, with the take-off coming out of the bottom of the main pipe. For up risers, install the take-off in the top of the pipe.

P. Install branch connections to mains using tee fittings in main pipe, with the branch connected to the bottom of the main pipe. For up-feed risers, connect the branch to the top of the main pipe.

Q. Install valves according to Division 23 Section “General-Duty Valves for HVAC Piping.”

R. Install unions in piping**,** NPS 2 (DN 50) and smaller, adjacent to valves, at final connections of equipment, and elsewhere as indicated.

S. Install flanges in piping, NPS 2-1/2 (DN65) and larger, at final connections of equipment and elsewhere as indicated.

T. Install strainers on inlet side of each control valve, pressure-reducing valve, solenoid valve, in-line pump, and elsewhere as indicated. Install NPS ¾ (DN 20) nipple and ball valve in blowdown connection of strainers NPS 2 (DN 50) and larger. Match size of strainer blowoff connection for strainers smaller than NPS 2 (DN 50).

U. Identify piping as specified in Division 23 Section “Identification for HVAC Piping and Equipment.”

3.4 HANGERS AND SUPPORTS

A. Hanger, support, and anchor devices are specified in Division 23 Section “Hangers and Supports for HVAC Piping and Equipment.” Comply with the following requirements for maximum spacing of supports.

B. Install the following pipe attachments:
   1. Adjustable steel clevis hangers for individual horizontal piping less than 20 feet long.
   2. Adjustable roller hangers and spring hangers for individual horizontal piping 20 feet or longer.
   3. Pipe Roller: MSS SP-58, Type 44 for multiple horizontal piping 20 feet or longer, supported on a trapeze.
   4. Spring hangers to support vertical runs.
   5. Provide copper-clad hangers and supports for hangers and supports in direct contact with copper pipe.
   6. On plastic pipe, install pads or cushions on bearing surfaces to prevent hanger from scratching pipe.

C. Install hangers for drawn-temper copper piping with the following maximum spacing and minimum rod sizes:
   1. NPS ¾ (DN 20): Maximum span, 5 feet; minimum rod size, ¼ inch.
   2. NPS 1 (DN 25): Maximum span, 6 feet; minimum rod size, ¼ inch.
   3. NPS 1-1/2 (DN 40): Maximum span, 8 feet; minimum rod size, 3/8 inch.
   4. NPS 2 (DN 50): Maximum span, 8 feet; minimum rod size, 3/8 inch.
   5. NPS 2-1/2 (DN 65): Maximum span, 9 feet; minimum rod size, 3/8 inch.
   6. NPS 3 (DN 80): Maximum span, 10 feet; minimum rod size, 3/8 inch.

D. Plastic Piping Hanger Spacing: Space hangers according to pipe manufacturer’s written instructions for service conditions. Avoid point loading. Space and install hangers with the fewest practical rigid anchor points.

E. Support vertical runs at roof, at each floor, and at 10-foot intervals between floors.

3.5 PIPE JOINT CONSTRUCTION

A. Ream ends of pipes and tubes and remove burrs. Bevel plain ends of steel pipe.

B. Remove scale, slag, dirt, and debris from inside and outside of pipe and fittings before assembly.

C. Soldered Joints: Apply ASTM B 813, water-flushable flux, unless otherwise indicated, to tube end. Construct joints according to ASTM B 828 or CDA's "Copper Tube Handbook," using lead-free solder alloy complying with ASTM B 32.

D. Brazed Joints: Construct joints according to AWS’s “Brazing Handbook,” “Pipe and Tube” Chapter, using copper-phosphorus brazing filler metal complying with AWS A5.8.

E. Threaded Joints: Thread pipe with tapered pipe threads according to ASME B1.20.1. Cut threads full and clean using sharp dies. Ream threaded pipe ends to remove burrs and restore full ID. Join pipe fittings and valves as follows:

1. Apply appropriate tape or thread compound to external pipe threads unless dry seal threading is specified.
2. Damaged Threads: Do not use pipe or pipe fittings with threads that are corroded or damaged. Do not use pipe sections that have cracked or open welds.

F. Flanged Joints: Select appropriate gasket material, size, type, and thickness for service application. Install gasket concentrically positioned. Use suitable lubricants on bolt threads.

G. Plastic Piping Solvent-Cemented Joints: Clean and dry joining surfaces. Join pipe and fittings according to the following:

1. Comply with ASTM F 402 for safe-handling practice of cleaners, primers, and solvent cements.

2. CPVC Piping: Join according to ASTM D 2846/D 2846M Appendix.

3. PVC Pressure Piping: Join ASTM D 1785 Schedule number, PVC pipe and PVC socket fittings according to ASTM D 2672. Join other-than-schedule number PVC pipe and socket fittings according to ASTM D 2855.
4. PVC Nonpressure Piping: Join according to ASTM D 2855.

3.6 HYDRONIC SPECIALTIES INSTALLATION

A. Install manual air vents at high points in piping, at heat-transfer coils, and elsewhere as required for system air venting.

3.7 TERMINAL EQUIPMENT CONNECTIONS

A. Sizes for supply and return piping connections shall be the same as or larger than equipment connections.

B. Install control valves in accessible locations close to connected equipment.

C. Install bypass piping with globe valve around control valve. If parallel control valves are installed, only one bypass is required.

D. Install ports for pressure gages and thermometers at coil inlet and outlet connections according to Division 23 Section “Meters and Gages for HVAC Piping.”

3.8 FIELD QUALITY CONTROL

A. Perform the following tests on hydronic piping:
1. Use ambient temperature water as a testing medium unless there is risk of damage due to freezing. Another liquid that is safe for workers and compatible with piping may be used.
2. While filling system, use vents installed at high points of system to release air. Use drains installed at low points for complete draining of test liquid.
3. Isolate expansion tanks and determine that hydronic system is full of water.
4. Subject piping system to hydrostatic test pressure that is not less than 1.5 times the system’s working pressure. Test pressure shall not exceed maximum pressure for any

vessel, pump, valve, or other component in system under test. Verify that stress due to pressure at bottom of vertical runs does not exceed 90 percent of specified minimum yield strength or 1.7 times “SE” value in Appendix A ASME B31.9, “Building Services Piping.”

5. After hydrostatic test pressure has been applied for at least 10 minutes, examine piping, joints, and connections for leakage. Eliminate leaks by tightening, repairing, or replacing components, and repeat hydrostatic test until there are no leaks.
6. Prepare written report of testing.

B. Perform the following before operating the system:
   1. Open manual valves fully.
   2. Inspect pumps for proper rotation.
   3. Inspect air vents at high points of system and determine if all are installed and operating freely (automatic type), or bleed air completely (manual type).
   4. Set temperature controls so all coils are calling for full flow.
   5. Inspect and set operating temperatures of hydronic equipment, such as boilers, chillers, cooling towers, to specified values.
   6. Verify lubrication of motors and bearings.

END OF SECTION 232113

SECTION 23 23 00 - REFRIGERANT PIPING

PART 1 - GENERAL

1.1 QUALITY ASSURANCE

A. Comply with ASHRAE 15, "Safety Code for Refrigeration Systems."

B. Comply with ASME B31.5, "Refrigeration Piping and Heat Transfer Components."

C. Soldered Joints: Construct joints according to ASTM B 828 or CDA's "Copper Tube Handbook."

1.2 PRODUCT STORAGE AND HANDLING

A. Store piping in a clean and protected area with end caps in place to ensure that piping interior and exterior are clean when installed.

1.3 PERFORMANCE REQUIREMENTS

A. Line Test Pressure for Refrigerant R-410A:

1. Suction Lines for Air-Conditioning Applications: 300 psig (2068 kPa).
2. Suction Lines for Heat-Pump Applications: 535 psig (3689 kPa).
3. Hot-Gas and Liquid Lines: 535 psig (3689 kPa).

PART 2 - PRODUCTS

2.1 TUBES AND FITTINGS

A. Copper Tube: ASTM B 88, Type L.

B. Wrought-Copper Fittings: ASME B16.22.

C. Wrought-Copper Unions: ASME B16.22.

D. Solder Filler Metals: ASTM B 32. Use 95-5 tin antimony or alloy HB solder to join copper socket fittings on copper pipe.

E. Brazing Filler Metals: AWS A5.8.

2.2 VALVES AND SPECIALTIES

A. Thermostatic Expansion Valves: Comply with ARI 750.

1. Body, Bonnet, and Seal Cap: Forged brass or steel.
2. Diaphragm, Piston, Closing Spring, and Seat Insert: Stainless steel.
3. Packing and Gaskets: Non-asbestos.
4. Capillary and Bulb: Copper tubing filled with refrigerant charge.
5. Suction Temperature: 40 degrees F (4.4 degrees C).
6. Superheat: Adjustable.
7. Reverse-flow option (for heat-pump applications).
8. End Connections: Socket, flare, or threaded union.
9. Working Pressure Rating: 700 psig (4820 kPa).

B. Solenoid Valves: Comply with ARI 760 and UL 429; listed and labeled by an NRTL.

1. Body and Bonnet: Plated steel.
2. Solenoid Tube, Plunger, Closing Spring, and Seat Orifice: Stainless steel.
3. Seat: Polytetrafluoroethylene.
4. End Connections: Threaded.
5. Electrical: Molded, watertight coil in NEMA 250 enclosure of type required by location with 1/2-inch (16-GRC) conduit adapter, and 24-V normally closed holding coil.
6. Working Pressure Rating: 400 psig (2760 kPa).
7. Maximum Operating Temperature: 240 degrees F (116 degrees C).
8. Manual operator.

C. Service Valves:

1. Body: Forged brass with brass cap including key end to remove core.
2. Core: Removable ball-type check valve with stainless-steel spring.
3. Seat: Polytetrafluoroethylene.
4. End Connections: Copper spring.
5. Working Pressure Rating: 500 psig (3450 kPa).

D. Safety Relief Valves: Comply with ASME Boiler and Pressure Vessel Code; listed and labeled by an NRTL.

1. Body and Bonnet: Ductile iron and steel, with neoprene O-ring seal.
2. Piston, Closing Spring, and Seat Insert: Stainless steel.
3. Seat Disc: Polytetrafluoroethylene.
4. End Connections: Threaded.
5. Working Pressure Rating: 400 psig (2760 kPa).
6. Maximum Operating Temperature: 240 degrees F (116 degrees C).

E. Straight-Type Strainers:

1. Body: Welded steel with corrosion-resistant coating.
2. Screen: 100-mesh stainless steel.
3. End Connections: Socket or flare.
4. Working Pressure Rating: 500 psig (3450 kPa).
5. Maximum Operating Temperature: 275 degrees F (135 degrees C).

F. Moisture/Liquid Indicators:

1. Body: Forged brass.

2. Window: Replaceable, clear, fused glass window with indicating element protected by filter screen.
3. Indicator: Color coded to show moisture content in ppm.
4. Minimum Moisture Indicator Sensitivity: Indicate moisture above 60 ppm.
5. End Connections: Socket or flare.
6. Working Pressure Rating: 500 psig (3450 kPa).
7. Maximum Operating Temperature: 240 degrees F (116 degrees C).

2.3 REFRIGERANTS

A. ASHRAE 34, R-410A: Pentafluoroethane/Difluoromethane.

PART 3 - EXECUTION

3.1 PIPING APPLICATIONS FOR REFRIGERANT R-410A

A. Suction Lines: Copper, Type L (B), drawn-temper tubing and wrought-copper fittings with soldered joints.

B. Hot-Gas and Liquid Lines, and Suction Lines for Heat Pump Applications: Copper, Type L (B), drawn-temper tubing and wrought-copper fittings with Alloy HB soldered joints.

C. Safety-Relief-Valve Discharge Piping: Copper, Type L (B), drawn-temper tubing and wrought-copper fittings with Alloy HB soldered joints.

3.2 INSTALLATION

A. Comply with requirements in Division 23 Section "Common Work Results for HVAC" for basic piping installation requirements.

B. Install wall penetration system at each pipe penetration through foundation wall. Make installation watertight. Comply with requirements in Division 23 Section "Common Work Results for HVAC" for wall penetration systems.

C. Drawing plans, schematics, and diagrams indicate general location and arrangement of piping systems; indicated locations and arrangements were used to size pipe and calculate friction loss, expansion, pump sizing, and other design considerations. Install piping as indicated unless deviations to layout are approved on Shop Drawings.

D. Install refrigerant piping and charge with refrigerant according to ASHRAE 15.

E. Install piping in concealed locations unless otherwise indicated and except in equipment rooms and service areas.

F. Install piping indicated to be exposed and piping in equipment rooms and service areas at right angles or parallel to building walls. Diagonal runs are prohibited unless specifically indicated otherwise.

G. Install piping above accessible ceilings to allow sufficient space for ceiling panel removal.

H. Install piping adjacent to machines to allow service and maintenance.

I. Install piping free of sags and bends.

J. Install fittings for changes in direction and branch connections.

K. Select system components with pressure rating equal to or greater than system operating pressure.

L. Install piping as short and direct as possible, with a minimum number of joints, elbows, and fittings.

M. Install refrigerant piping in protective conduit where installed belowground.

N. Install refrigerant piping in rigid or flexible conduit in locations where exposed to mechanical injury.

O. Belowground, install copper tubing in PVC conduit. Vent conduit outdoors.

P. Insulate suction lines to comply with Division 23 Section "HVAC Insulation."

Q. Slope refrigerant piping as follows:

1. Install horizontal hot-gas discharge piping with a uniform slope downward away from compressor.
2. Install horizontal suction lines with a uniform slope downward to compressor.
3. Liquid lines may be installed level.

R. Install solenoid valves upstream from each thermostatic expansion valve. Install solenoid valves in horizontal lines with coil at top.

S. Install thermostatic expansion valves as close as possible to distributors on evaporator coils.

T. Install piping as short and direct as possible, with a minimum number of joints, elbows, and fittings.

U. When brazing or soldering, remove solenoid-valve coils and sight glasses; also remove valve stems, seats, and packing, and accessible internal parts of refrigerant specialties. Do not apply heat near expansion-valve bulb.

V. Install piping with adequate clearance between pipe and adjacent walls and hangers or between pipes for insulation installation.

END OF SECTION 232300

SECTION 23 31 13 - DUCTWORK

PART 1 - GENERAL

1.1 RELATED DOCUMENTS

A. Drawings and general provisions of the Contract, including General and Supplementary Conditions and Division 01 Specification Sections, apply to this Section.

1.2 SUMMARY

A. Section includes:
   1. Single-wall rectangular ducts and fittings.
   2. Single-wall round and flat-oval ducts and fittings.
   3. Sheet metal materials.
   4. Sealants and gaskets.
   5. Hangers and supports.
   6. Seismic-restraint devices.

B. Related Sections:
   1. Division 23 Section “Testing, Adjusting, and Balancing for HVAC” for testing, adjusting, and balancing requirements for metal ducts.
   2. Division 23 Section “Air Duct Accessories” for dampers, sound-control devices, duct-mounting access doors and panels, turning vanes, and flexible ducts.

1.3 SYSTEM DESCRIPTION

A. Dimensions indicated on drawings are inside clear dimension.

1.4 PERFORMANCE REQUIREMENTS

A. Duct Design:
   1. Static-Pressure Classes:
      a. Medium Pressure Supply Ducts: 2-inch wg.
      b. Return Ducts (Negative Pressure): 2-inch wg.
      c. General Exhaust Ducts (Negative Pressure): 1-inch wg.
   2. Leakage Class:
      a. Supply Air Ducts: 1 percent of design airflow at maximum duct design static pressure.
      b. Return Air Ducts: 2 percent of design airflow at maximum duct design static pressure.
      c. General Exhaust Air Ducts: 2 percent of design airflow at maximum duct design static pressure.

B. Structural Performance:

1.5 SUBMITTALS

A. Product Data: For each type of the following products:
   1. Adhesives.
   2. Sealants and gaskets.

B. Shop Drawings:
   1. Fabrication, assembly, installation, including plans, elevations, sections, components, and attachments to other work.
   2. Factory-and shop-fabricated ducts and fittings.
   3. Duct layout indicating sizes, configuration, liner material, and static-pressure classes.
   4. Elevation of top of ducts.
   5. Dimensions of main duct runs from building grid lines.
   6. Fittings.
   7. Reinforcement and spacing.
   8. Seam and joint construction.
   9. Penetrations through fire-rated and other partitions.
   10. Equipment installation based on equipment being used on Project.
   11. Locations for duct accessories, including dampers, turning vanes, and access doors and panels.
   12. Hangers and supports, including methods for duct and building attachment and vibration isolation.

C. Welding certificates.

D. Field quality-control reports.

1.6 QUALITY ASSURANCE

A. Welding Qualifications: Qualify procedures and personnel according to AWS D1.1/D1/1M, “Structural Welding Code – Steel,” for hangers and supports and AWS D9.1M/D9.1, “Sheet Metal Welding Code,” for duct joint and seam welding.

B. Welding Qualifications: Qualify procedures and personnel according to the following:
   1. AWS D1.1/D1.1M, “Structural Welding Code – Steel,” for hangers and supports.
   2. AWS D9.1M/D9.1, “Sheet Metal Welding Code,” for duct joint and seam welding.

PART 2 - PRODUCTS

2.1 SINGLE-WALL RECTANGULAR DUCTS AND FITTINGS

A. General Fabrication Requirements: Comply with SMACNA’s “HVAC Duct Construction Standards – Metal and Flexible” based on indicated static-pressure class unless otherwise indicated.

B. Transverse Joints: Select joint types and fabricate according to SMACNA’s “HVAC Duct Construction Standards – Metal and Flexible,” Figure 1-4, “Transverse (Firth) Joints,” for static-pressure class, applicable sealing requirements, materials involved, duct-support intervals,

and other provisions in SMACNA's "HVAC Duct Construction Standards – Metal and Flexible."

C. Longitudinal Seams: Select seam types and fabricate according to SMACNA's "HVAC Duct Construction Standards – Metal and Flexible," Figure 1-5, "Longitudinal Seams – Rectangular Ducts," for static-pressure class, applicable sealing requirements, materials involved, duct-support intervals, and other provisions in SMACNA's "HVAC Duct Construction Standards – Metal and Flexible."

D. Elbows, Transitions, Offsets, Branch Connections, and Other Duct Construction: Shall be as indicated on drawings and fabricated according to SMACNA's "HVAC Duct Construction Standards – Metal and Flexible," Chapter 2, "Fittings and Other Construction," for static-pressure class, applicable sealing requirements, materials involved, duct-support intervals, and other provisions in SMACNA's "HVAC Duct Construction Standards – Metal and Flexible."
   1. For mitered 90 degree ells, use single thickness turning vanes.
   2. On medium pressure ducts, use high efficiency turning vanes with a minimum 1 inch trailing edge.

2.2 SINGLE-WALL ROUND AND FLAT-OVAL DUCTS AND FITTINGS

A. General Fabrication Requirements: Comply with SMACNA's "HVAC Duct Construction Standards – Metal and Flexible," Chapter 3, "Round, Oval, and Flexible Duct," based on indicated static-pressure class unless otherwise indicated.
   1. Manufacturers: Subject to compliance with requirements, provide products by one of the following:
      a. Lindab Inc.
      b. McGill AirFlow LLC.
      c. SEMCO Incorporated.
      d. Spiral Manufacturing Co., Inc.

B. Flat-Oval Ducts: Indicated dimensions are the duct width (major dimension) and diameter (diameter of the round sides connecting the flat portions of the duct).

C. Transverse Joints: Select joint types and fabricate according to SMACNA's "HVAC Duct Construction Standards – Metal and Flexible," Figure 3-2, "Transverse Joints – Round Duct," for static-pressure class, applicable sealing requirements, materials involved, duct-support intervals, and other provisions in SMACNA's "HVAC Duct Construction Standards – Metal and Flexible."
   1. Transverse Joints in Ducts Larger Than 60 Inches in Diameter: Flanged.

D. Longitudinal Seams: Select seam types and fabricate according to SMACNA's "HVAC Duct Construction Standards – Metal and Flexible," Figure 3-1, "Seams – Round Duct and Fittings," for static-pressure class, applicable sealing requirements, materials involved, duct-support intervals, and other provisions in SMACNA's "HVAC Duct Construction Standards – Metal and Flexible."
   1. Fabricate round ducts larger than 90 inches in diameter with butt-welded longitudinal seams.
   2. Fabricate flat-oval ducts larger than 72 inches in width with butt-welded longitudinal seams.

E. Tees and Laterals: Shall be as indicated on drawings and fabricated according to SMACNA's "HVAC Duct Construction Standards – Metal and Flexible," Figure 3-4, "90 Degree Tees and Laterals," and Figure 3-5, "Conical Tees," for static-pressure class, applicable sealing requirements, materials involved, duct-support intervals, and other provisions in SMACNA's "HVAC Duct Construction Standards – Metal and Flexible."

F. Elbows: Smooth or 5-piece for 90 degree ells with centerline radius of 1.5 times duct dimension in plane of bend. Ells of 45 degrees or less may be 3-piece.

2.3 SHEET METAL MATERIALS

A. General Material Requirements: Comply with SMACNA's "HVAC Duct Construction Standards – Metal and Flexible," for acceptable materials, material thicknesses, and duct construction methods unless otherwise indicated. Sheet metal materials shall be non-shedding, free of pitting, seam marks, roller marks, stains, discolorations and other imperfections.

B. Galvanized Sheet Steel: Comply with ASTM A 653/A 653M.
   1. Galvanized Coating Designation: G90 (Z275).
   2. Finishes for Surfaces Exposed to View: Mill phosphatized.

C. Fibrous-Glass Duct Board: Comply with UL 181, Class 1, 1-inch thick, fibrous glass with fire-resistant, reinforced foil-scrim-kraft barrier, and having the air-side surface treated to prevent erosion.

D. Aluminum Alloy 3003 per ASTM B209.

E. Reinforcement Shapes and Plates: ASTM A 36/A 36M, steel plates, shapes, and bars; black and galvanized.
   1. Where black- and galvanized-steel shapes and plates are used to reinforce aluminum duct, isolate the different metals with butyl rubber, neoprene, or EPDM gasket materials.

F. Tie Rods: Galvanized steel, ¼ inch minimum diameter for lengths 36 inches or less; 3/8 inch minimum diameter for lengths longer than 36 inches.

2.4 SEALANT AND GASKETS

A. General Sealant and Gasket Requirements: Surface-burning characteristics for sealants and gaskets shall be a maximum flame-spread index of 25 and a maximum smoke-developed index of 50 when tested according to UL 723; certified by an NRTL.

B. Two-Part Tape Sealing System:
   1. Tape: Woven cotton fiver impregnated with mineral gypsum and modified acrylic/silicone activator to react exothermically with tape to form hard, durable, airtight seal.
   2. Tape Width: 4 inches.
   3. Sealant: Modified styrene acrylic.
   4. Water resistant.
   5. Mold and mildew resistant.
   6. Maximum Static-Pressure Class: 10-inch wg, positive and negative.

7. Service: Indoor and outdoor.
8. Service Temperature: Minus 40 to plus 200 degrees F.
9. Substrate: Compatible with galvanized sheet steel (both PVC coated and bare), stainless steel, or aluminum.

C. Water-Based Joint and Seam Sealant:
1. Application Method: Brushed on.
2. Solids Content: Minimum 65 percent.
3. Shore A Hardness: Minimum 20.
4. Water resistant.
5. Mold and mildew resistant.
6. VOC: Maximum 75 g/L (less water).
7. Maximum Static-Pressure Class: 10-inch wg, positive and 20-inch wg negative.
8. Service: Indoor or outdoor.
9. Substrate: Compatible with galvanized sheet steel (both PVC coated and bare), stainless steel, or aluminum sheets.

D. Flange Gaskets: Butyl rubber, neoprene, or EDPM polymer with polyisobutylene plasticizer.

E. Round Duct Joint O-Ring Seals:
1. Seal shall provide maximum leakage class of 3 cfm/100 SF at 1-inch wg and shall be rated for 10-inch wg static-pressure class, positive or negative.
2. EDPM O-ring to seal in concave bead in coupling or fitting spigot.
3. Double-lipped, EPDM O-ring seal, mechanically fastened to factory-fabricated couplings and fitting spigots.

2.5 HANGERS AND SUPPORTS

A. Hanger Rods for Noncorrosive Environments: Cadmium-plated steel rods and nuts.

B. Strap and Rod Sizes: Comply with SMACNA's "HVAC Duct Construction Standards – Metal and Flexible," Table 4-1, "Rectangular Duct Hangers Minimum Size," and Table 4-2, "Minimum Hanger Sizes for Round Duct."

C. Steel Cables for Galvanized-Steel Ducts: Galvanized steel complying with ASTM A 603.

D. Steel Cables for Stainless-Steel Ducts: Stainless steel complying with ASTM A 492.

E. Steel Cable End Connections: Cadmium-plated steel assemblies with brackets, swivel, and bolts designed for duct hanger service; with an automatic-locking and clamping device.

F. Duct Attachments: Sheet metal screws, blind rivets, or self-tapping metal screws; compatible with duct materials.

G. Trapeze and Riser Supports:
1. Supports for Galvanized-Steel Ducts: Galvanized-steel shapes and plates.

2.6 VOLUME DAMPERS

A. Manufacturers:
   1. Greenheck.
   2. Leader Industries.
   3. Ruskin Company.
   4. Vent Products Company, Inc.
   5. Air Balance, Inc.

B. General for all Volume Dampers: Volume dampers (factory fabricated, standard and low leakage) shall include a locking device to hold dampers in a fixed position and shall be provided with opposed blade design if offered by manufacturer.

C. General Description: Factory fabricated, with required hardware and accessories. Stiffen damper blades for stability. Include locking device to hold single-blade dampers in a fixed position without vibration. Close duct penetrations for damper components to seal duct consistent with pressure class.
   1. Pressure Classes of 3-Inch wg or Higher: End bearings or other seals for ducts with axles full length of damper blades and bearings at both ends of operating shaft.
   2. Damper Limit (Height): 11 inch for single-blade; greater than 11-inch shall be multiple blade.

D. Standard Volume Dampers: Single-blade or multiple opposed-blade design, standard leakage rating, suitable for horizontal or vertical applications. Material to match duct material; use galvanized-steel accessories in galvanized-steel and fibrous-glass ducts, stainless-steel accessories in stainless-steel ducts, and aluminum accessories in aluminum ducts.
   1. Steel Frames: Hat-shaped, galvanized or stainless sheet steel channels, minimum of 0.064 inch thick, with mitered and welded corners; frames with flanges where indicated for attaching to walls and flangeless frames where indicated for installing in ducts.
   2. Roll-Formed Steel Blades: 0.064 inch thick, galvanized or stainless sheet steel.
   3. Aluminum Frames: Hat-shaped, 0.10 inch thick, aluminum sheet channels; frames with flanges where indicated for attaching to walls; and flangeless frames where indicated for installing in ducts.
   4. Roll-Formed Aluminum Blades: 0.10 inch thick extruded aluminum.
   5. Blade Axles: Galvanized steel, stainless steel, or nonferrous.
   6. Bearings: Oil-impregnated bronze, molded synthetic, or stainless-steel sleeve.
   7. Tie Bars and Brackets: Aluminum or galvanized steel.

E. Low-Leakage Volume Dampers: Multiple-or single-blade, parallel-or opposed-blade design as indicated, low-leakage rating, and suitable for horizontal or vertical applications. Material to match duct material.
   1. Steel Frames: Galvanized or stainless sheet steel channels, minimum of 0.064 inch thick, with mitered and welded corners; frames with flanges where indicated for attaching to walls and flangeless frames where indicated for installing in ducts.
   2. Roll-Formed Steel Blades: 0.064 inch thick, galvanized or stainless sheet steel.
   3. Aluminum Frames: 0.10 inch thick, aluminum sheet channels; frames with flanges where indicated for attaching to walls and flangeless frames where indicated for installing in ducts.
   4. Roll-Formed Aluminum Blades: 0.10 inch thick aluminum sheet.
   5. Extruded-Aluminum Blades: 0.10 inch thick extruded aluminum.
   6. Blade Axles: Galvanized steel.

7. Bearings: Stainless-steel sleeve thrust or ball.
8. Blade Seals: Neoprene.
9. Jamb Seals: Cambered stainless steel.
10. Tie Bars and Brackets: Galvanized steel.

F. Jackshaft: 1 inch diameter, galvanized steel pipe rotating within pipe-bearing assembly mounted on supports at each mullion and at each end of multiple-damper assemblies.
   1. Length and Number of Mountings: Appropriate to connect linkage of each damper in multiple-damper assembly.

G. Damper Hardware: Zinc-plated, die-cast core with dial and handle made of 3/32 inch thick zinc-plated steel, and a ¾ inch hexagon locking nut. Include center hole to suit damper operating-rod size. Include elevated platform (stand-off bracket) for insulated duct mounting.

2.7 FIRE DAMPERS

A. Manufacturers:
   1. Air Balance, Inc.
   2. Leader Industries.
   3. Greenheck.
   4. Ruskin Company.
   5. Vent Products Company, Inc.

B. Material to match duct material; use galvanized-steel accessories in galvanized-steel ducts, stainless-steel accessories in stainless-steel ducts, and aluminum accessories in aluminum ducts.

C. Each Damper shall bear an UL approved label identifying its classification as a Dynamic Rated Fire Damper, (static dampers not acceptable). Fire dampers shall be labeled according to UL 555current edition.

D. Fire Rating: 3 hours.

E. Dampers shall be capable of the following dynamic rating:
   1. Dampers shall have been tested per AMCA 500-90, in which it shall have proven to close under specified static pressure and dynamic airflow conditions.

F. Frame: Curtain type with blades outside airstream, 100% free area; fabricated with roll-formed, 0.034 inch thick galvanized steel; with mitered and interlocking corners.

G. Integral Sleeve/Frame: Curtain type with blades outside airstream, 100% free area; fabricated with roll-formed, minimum 0.052 inch thick galvanized steel or adjacent duct sheet metal thickness, whichever is greater; with sleeve and frame of damper roll-formed into integral shape.

H. Mounting Sleeve: Factory-or field-installed, galvanized sheet steel.
   1. Minimum Thickness: 0.052 or 0.138 inch thick as indicated and of length to suit application.
   2. Exceptions: Omit sleeve where damper frame width permits direct attachment of perimeter mounting angels on each side of wall or floor, and thickness of damper frame complies with sleeve requirements.

I. Mounting Orientation: Vertical or horizontal as indicated.

J. Blades: Roll-formed, interlocking, 0.034 inch thick, galvanized sheet steel. In place of interlocking blades, use full-length, 0.034 inch thick, galvanized-steel blade connections.

K. Vertical and Horizontal Curtain Fire Dampers: Include blade lock and two stainless steel, constant force closure springs per damper section.

L. Fire dampers shall be installed in walls/floors utilizing 16 gage UL approved Wrap Around Retaining Angles.

M. Fusible Links: Replaceable, 165 degrees F rated.

2.8 MULTI BLADED FIRE DAMPERS, DYNAMIC RATED

A. General Description: Fire dampers shall be labeled according to UL 555 for 3 hour rating.

B. Fusible Links: Replaceable, 165 degrees F rated.

C. Frame and Blades: 0.064 inch thick, galvanized sheet steel. Triple crimped blades to be on 6” centers.

D. Mounting Sleeve: Factory-installed, 0.052 inch thick, galvanized sheet steel; length to suit wall or floor application.

E. Fire dampers shall be installed in walls/floors utilizing 16 gage UL approved Wrap Around Retaining Angles.

2.9 FLANGE CONNECTORS

A. Manufacturers: Subject to compliance with requirements, provide products by one of the following:
   1. Ductmate Industries, Inc.
   2. Nexus PDQ; Division of Shilco Holdings Inc.
   3. Ward Industries, Inc.; a division of Hart & Cooley, Inc.

B. Description: Add-on or roll-formed, factory-fabricated, slide-on transverse flange connectors, gaskets, and components.

C. Material: Galvanized steel.

D. Gage and Shape: Match connecting ductwork.

2.10 TURNING VANES

A. Fabricate to comply with SMACNA’s “HVAC Duct Construction Standards – Metal and Flexible” for vaqnes and vane runners. Vane runners shall automatically align vanes. Single thickness turning vanes may be used in ducts with velocities up to 1200 fpm.

B. Manufactured Turning Vanes: Fabricate 1-1/2 inch wide, single or double-vane, curved blades of galvanized sheet steel set ¾ inch o.c.; support with bars perpendicular to blades set 2 inches o.c.; and set into vane runners suitable for duct mounting.
   1. Manufacturers:
      a. Ductmate Industries, Inc.
      b. Duro Dyne Corp.
      c. METALAIRE, Inc.
      d. Ward Industries, Inc.

2.11 DUCT-MOUNTED ACCESS DOORS

A. General Description: Fabricate doors airtight and suitable for duct pressure class.

B. Door: Double wall, duct mounted, rectangular; fabricated of galvanized sheet metal with insulation fill and thickness as indicated for duct pressure class. Include vision panel where indicated. Include 1-by-1 inch butt or piano hinge and cam latches.
   1. Manufacturers:
      a. Air Balance, Inc.
      b. Ductmate Industries, Inc.
      c. Kees, Inc.
      d. Leader Industries.
   2. Frame: Galvanized sheet steel, with bend-over tabs and foam gaskets.
   3. Provide number of hinges and locks as follows:
      a. Less Than 12 Inches Square: Secure with two sash locks.
      b. Up to 18 Inches Square: Two hinges and two sash locks.
      c. Up to 24 by 48 Inches: Three hinges and two compression latches with outside handles.
      d. Sizes 24 by 48 Inches and Larger: One additional hinge.
      e. Hinges may be replaced with latches where clearance will not allow full range of access door opening.

C. Door: Double wall, duct mounted, round; fabricated of galvanized sheet metal with insulation fill and 1-inch thickness. Include cam latches.
   1. Manufacturers:
      a. Flexmaster U.S.A., Inc.
      b. McGill Airflow Corporation.
   2. Frame: Galvanized sheet steel, with spin-in notched frame.

D. Pressure Relief Access Door: Double wall and duct mounting; fabricated of galvanized sheet metal with insulation fill and thickness as indicated for duct pressure class. Include vision panel where indicated, latches, and retaining chain.
   1. Manufacturers:
      a. Air Balance, Inc.
      b. Ductmate Industries, Inc.
      c. Greenheck.
      d. KEES, Inc.
   2. Frame: Galvanized sheet steel, with bend-over tabs and foam gaskets.

E. Seal around frame attachment to duct and door to frame with neoprene or foam rubber.

F. Insulation: 1 inch thick, fibrous-glass or polystyrene-foam board.

PART 3 - EXECUTION

3.1 DUCT INSTALLATION

A. Drawing plans, schematics, and diagrams indicate general location and arrangement of duct system. Indicated duct locations, configurations, and arrangements were used to size ducts and calculate friction loss for air-handling equipment sizing and for other design considerations. Install duct systems as indicated unless deviations to layout are approved on Shop Drawings and Coordination Drawings.

B. Install ducts according to SMACNA's "HVAC Duct Construction Standards – Metal and Flexible" unless otherwise indicated.

C. Install round and flat-oval ducts in maximum practical lengths.

D. Install ducts with fewest possible joints.

E. Install factory- or shop-fabricated fittings for changes in direction, size, and shape and for branch connections.

F. Unless otherwise indicated, install ducts vertically and horizontally, and parallel and perpendicular to building lines.

G. Install ducts close to walls, overhead construction, columns, and other structural and permanent enclosure elements of building.

H. Install ducts with a clearance of 1 inch, plus allowance for insulation thickness.

I. Route ducts to avoid passing through transformer vaults and electrical equipment rooms and enclosures.

J. Where ducts pass through non-fire-rated interior partitions and exterior walls and are exposed to view, cover the opening between the partition and duct or duct insulation with sheet metal flanges of same metal thickness as the duct. Overlap openings on four sides by at least 1-1/2 inches.

K. Where ducts pass through fire-rated interior partitions and exterior walls, install fire dampers. Comply with requirements in Division 23 Section "Air Duct Accessories" for fire and smoke dampers.

L. Protect duct interiors from moisture, construction debris and dust, and other foreign materials. Comply with SMACNA's "Duct Cleanliness for New Construction Guidelines."

3.2 SEAM AND JOINT SEALING

A. Seal duct seams and joints for duct static-pressure and leakage classes specified in "Performance Requirements" Article, according to SMACNA's "HVAC Duct Construction

Standards – Metal and Flexible," Table 1-2, "Standard Duct Sealing Requirements," unless otherwise indicated.

1. Seal Class:
    a. Medium Pressure Supply Ducts, up to 9 inches Positive: Seal Class A.
    b. Return Ducts, Negative 3 inches or Less" Seal Class A.
    c. Exhaust Ducts, Negative 19 inches or Less: Seal Class B.
    d. Exhaust Ducts, Negative 2 inches or Less: Seal Class B.

3.3 HANGER AND SUPPORT INSTALLATION

A. Comply with SMACNA's "HVAC Duct Construction Standards – Metal and Flexible," Chapter 4, "Hangers and Supports."

B. Building Attachments: Concrete inserts, powder-actuated fasteners, or structural-steel fasteners appropriate for construction materials to which hangers are being attached.
    1. Where practical, install concrete inserts before placing concrete.
    2. Install powder-actuated concrete fasteners after concrete is placed and completely cured.
    3. Use powder-actuated concrete fasteners for standard-weight aggregate concretes or for slabs more than 4 inches thick.
    4. Do not use powder-actuated concrete fasteners for lightweight-aggregate concretes or for slabs less than 4 inches thick.
    5. Do not use powder-actuated concrete fasteners for seismic restraints.

C. Hanger Spacing: Comply with SMACNA's "HVAC Dust Construction Standards – Metal and Flexible," Table 4-1, "Rectangular Duct Hangers Minimum Size," and Table 4-2, "Minimum Hanger Sizes for Round Duct," for maximum hanger spacing; install hangers and supports within 24 inches of each elbow and within 48 inches of each branch intersection.

D. Hangers Exposed to View: Threaded rod and angle or channel supports.

E. Support vertical ducts with steel angles or channel secured to the sides of the duct with welds, bolts, sheet metal screws, or blind rivets; support at each floor and at a maximum interval of 16 feet.

F. Install upper attachments to structures. Select and size upper attachments with pull-out, tension, and shear capacities appropriate for supported loads and building materials where used.

3.4 CONNECTIONS

A. Make connections to equipment with flexible connectors complying with Division 23 Section "Air Duct Accessories."

B. Comply with SMACNA's "HVAC Duct construction Standards – Metal and Flexible" for branch, outlet and inlet, and terminal unit connections.

3.5 FIELD QUALITY CONTROL

A. Perform tests and inspections.

B. Leakage Tests:
   1. Comply with SMACNA's "HVAC Air Duct Leakage Test Manual."
   2. Test the following systems:
      a. Supply air for AHU-3-1-A and AHU-3-1B.
      b. Return air for AHU-3-1A and AHU-3-1B.
      c. Exhaust air including EXF-3-1, EXF-3-2, EXF-3-3 (Dust Collection) and EXF-3-4.
   3. Disassemble, reassemble, and seal segments of systems to accommodate leakage testing and for compliance with test requirements.
   4. Test for leaks before insulation application.
   5. Conduct tests at static pressures equal to maximum design pressure of system or section being tested. If static-pressure classes are not indicated, test entire system at maximum system design pressure. Do not pressurize systems above maximum design operating pressure. Give seven days' advance notice for testing.

C. Duct System Cleanliness Tests:
   1. Visually inspect duct system to ensure that no visible contaminants are present.
   2. Test sections of metal duct system, chosen randomly by Owner, for cleanliness according to "Vacuum Test" in NADCA ACR, "Assessment, Cleaning, and Restoration of HVAC Systems."
      a. Acceptable Cleanliness Level: Net weight of debris collected on the filter media shall not exceed 0.75 mg/100 sq. cm.

D. Duct system will be considered defective if it does not pass tests and inspections.

E. Prepare test and inspection reports.

3.6 DUCT SCHEDULE

A. Intermediate Reinforcement:
   1. Galvanized-Steel Ducts: Galvanized steel.
   2. 304 Stainless Steel Ducts: Stainless steel.
   3. Aluminum Alloy 3003 per ASTM B209.

B. Elbow Configuration:
   1. Rectangular Duct: Comply with SMACNA's "HVAC Dust Construction Standards – Metal and Flexible," Figure 2-2, "Rectangular Elbows."
      a. Velocity 1000 fpm or Lower:
         1) Radius Type RE 1 with minimum 1.5 radius-to-diameter ratio.
         2) Mitered Type RE 4 with turning vanes.
      b. Velocity 1000 to 1500 fpm:
         1) Radius Type RE 1 with minimum 1.5 radius-to diameter ratio.
         2) Mitered Type RE 2 with vanes complying with SMACNA's "HVAC Duct Construction Standards – Metal and Flexible," Figure 2-3, "Vanes and Vane Runners," and Figure 2-4, "Vane Support in Elbows."
      c. Velocity 1500 fpm or Higher:
         1) Radius Type RE 1 with minimum 1.5 radius-to-diameter ratio.
         2) Mitered Type RE 2 with vanes complying with SMACNA's "HVAC Duct Construction Standards – Metal and Flexible," Figure 2-3, "Vanes and Vane Runners," and Figure 2-4, " Vane Support in Elbows."

2. Round Duct: Comply with SMACNA's "HVAC Duct Construction Standards – Metal and Flexible,"Figure 3-3, "Round Duct Elbows."
    a. Minimum Radius-to-Diameter Ratio and Elbow Segments: Comply with SMACNA's "HVAC Duct Construction Standards – Metal and Flexible," Table 3-1, "Mitered Elbows." Elbows with less than 90-degree change of direction have proportionately fewer segments.
        1) Velocity 1000 fpm or Lower: 1.5 radius-to-diameter ratio and five segments for 90-degree elbow.
        2) Velocity 1000 to 1500 fpm: 1.5 radius-to-diameter ratio and five segments for 90-degree elbow.
        3) Velocity 1500 fpm or Higher: 1.5 radius-to-diameter ratio and five segments for 90-degree elbow.
    b. Round Elbows, 12 Inches and Smaller in Diameter: Stamped or welded segmented.
    c. Round Elbows, 14 Inches and Larger in Diameter: Welded segmented.

C. Branch Configuration:
1. Rectangular Duct: Comply with SMACNA's "HVAC Duct Construction Standards – Metal and Flexible," Figure 2-6, "Branch Connections."
    a. Rectangular Main to Rectangular Branch: 45-degree entry.
    b. Rectangular Main to Round Branch: Spin in.
2. Round and Flat Oval: Comply with SMACNA's "HVAC Duct Construction Standards – Metal and Flexible," Figure 3-4, "90 Degree Tees and Laterals," and Figure 3-5, "Conical Tees." Saddle taps are permitted in existing duct.
    a. Velocity 1000 fpm or Lower: Conical tap.
    b. Velocity 1000 to 1500: Conical tap.
    c. Velocity 1500 fpm or Higher: 45-degree lateral, or conical tap.

END OF SECTION

SECTION 23 34 23 - HVAC POWER VENTILATORS

PART 1 - GENERAL

1.1 SECTION REQUIREMENTS

A. Submittals: Product Data.

B. Products shall be licensed to use the AMCA-Certified Ratings Seal.

C. Power ventilators shall comply with UL 705.

D. Electrical Components, Devices, and Accessories: Listed and labeled as defined in NFPA 70, by a qualified testing agency, and marked for intended location and application.

PART 2 - PRODUCTS

2.1 CENTRIFUGAL WALL AND ROOF VENTILATORS

A. Basis-of-Design Product: Subject to compliance with requirements, provide product indicated on Drawings or comparable product by one of the following:

1. Aerovent.
2. Carnes Company.
3. Greenheck Fan Corporation.
4. Loren Cook Company.
5. Penn Ventilation. Certifications: Fan shall be manufactured at an ISO 9001 certified facility, listed by Underwriters Laboratories (UL 705). Fan shall bear AMCA Certified Ratings Seal for Sound and Air Performance.

C. Construction: All Aluminum bolted and welded construction using corrosion-resistant fasteners. Material shall be minimum of 16 gauge marine alloy aluminum.

D. Housing: Removable, spun-aluminum, dome top and outlet baffle; square, one-piece, aluminum base with venturi inlet cone.

1. Upblast Units: Aluminum discharge baffle to direct discharge air upward, with rain and snow drains.
2. Wall-Mounting Units: Aluminum rectangular base with venturi inlet cone, motor mount, and vibration isolators designed for wall mounting.

E. Fan Wheels: Precision cast Aluminum hub and wheel with backward-inclined blades.

F. Belt-Driven Drive Assembly: Resiliently mounted to housing.

1. Fan Shaft: Turned, ground, and polished steel; keyed to wheel hub.
2. Shaft Bearings: Permanently lubricated, permanently sealed, self-aligning ball bearings. Heavy duty greasable ball type in a cast iron pillowblock housing selected for a minimum L50 life in excess of 200,000 hours at maximum catalog operating speed.
3. Pulleys: Cast-iron, adjustable-pitch motor pulley.
4. Fan and motor isolated from exhaust airstream.

5. Motor shall be totally-enclosed fan cooled, TEFC.

G. Provided Accessories:

1. Disconnect Switch: Nonfusible type, with thermal-overload protection mounted inside fan housing, factory wired through an internal aluminum conduit.
2. Bird Screens: Removable, 1/2-inch (13-mm) mesh, aluminum or brass wire.
3. Dampers: Counterbalanced, parallel-blade, backdraft dampers mounted in curb base; factory set to close when fan stops.
4. Extended Lube Lines.
5. Motorized Dampers: Parallel-blade dampers mounted in curb base with electric actuator; wired to close when fan stops.
6. Integral conduit chase with 6’ electrical pigtail that extends through roof.

H. Roof Curbs: Aluminum; mitered and welded corners; 1-1/2-inch- (40-mm-) thick, rigid, fiberglass insulation adhered to inside walls; and 1-1/2-inch (40-mm) wood nailer. Size as required to suit roof opening and fan base.

1. Configuration: Built-in raised cant and mounting flange.
2. Overall Height: 12 inches (300 mm).
3. Pitch Mounting: Manufacture curb for roof slope.
4. Mounting Pedestal: Galvanized steel with removable access panel.

2.2 CEILING-MOUNTED VENTILATORS

A. Basis-of-Design Product: Subject to compliance with requirements, provide product indicated on Drawings or comparable product by one of the following:

1. Carnes Company.
2. Greenheck Fan Corporation.
3. Loren Cook Company.
4. PennBarry.

B. Housing: Steel, lined with acoustical insulation.

C. Fan Wheel: Centrifugal wheels directly mounted on motor shaft. Fan shrouds, motor, and fan wheel shall be removable for service.

D. Grille: Painted aluminum, louvered grille with flange on intake and thumbscrew attachment to fan housing.

E. Electrical Requirements: Junction box for electrical connection on housing and receptacle for motor plug-in.

F. Accessories:

1. Variable-Speed Controller: Solid-state control to reduce speed from 100 to less than 50 percent.
2. Ceiling Radiation Damper: Fire-rated assembly with ceramic blanket, stainless-steel springs, and fusible link.
3. Isolation: Rubber-in-shear vibration isolators.

2.3 IN-LINE CENTRIFUGAL FANS

A. Basis-of-Design Product: Subject to compliance with requirements, provide product indicated on Drawings or comparable product by one of the following:

1. Carnes Company.
2. Greenheck Fan Corporation.
3. Loren Cook Company.
4. PennBarry.

B. Housing: Split, spun aluminum with aluminum straightening vanes, inlet and outlet flanges, and support bracket adaptable to floor, side wall, or ceiling mounting.

C. Direct-Drive Units: Motor mounted in airstream, factory wired to disconnect switch located on outside of fan housing.

D. Belt-Driven Units: Motor mounted on adjustable base, with adjustable sheaves, enclosure around belts within fan housing, and lubricating tubes from fan bearings extended to outside of fan housing.

E. Fan Wheels: Aluminum, airfoil blades welded to aluminum hub.

F. Accessories:

1. Variable-Speed Controller: Solid-state control to reduce speed from 100 to less than 50 percent.
2. Companion Flanges: For inlet and outlet duct connections.
3. Fan Guards: 1/2- by 1-inch (13- by 25-mm) mesh of galvanized steel in removable frame. Provide guard for inlet or outlet for units not connected to ductwork.
4. Motor and Drive Cover (Belt Guard): Epoxy-coated steel.

G. Characteristics:

1. Vibration Isolators:

a. Type: Spring hangers.
b. Static Deflection: 1 inch (25 mm).

2. Spark Arrestance Class: [A] [B] [C].

PART 3 - EXECUTION

3.1 INSTALLATION

A. Roof-Mounted Units: Install roof curb on roof structure, according to [ARI Guideline B.] [NRCA's "Low-Slope Membrane Roofing Construction Details Manual," Illustration "Raised Curb Detail for Rooftop Air Handling Units and Ducts."] Install and secure roof-mounted fans on curbs, and coordinate roof penetrations and flashing with roof construction.

B. In-Line Centrifugal Fans: Suspend units from structural-steel support frame using threaded steel rods and vibration isolation springs.

C. Ceiling-Mounted Units: Suspend units from structure using steel wire or metal straps.

D. Ground power ventilators.

END OF SECTION

SECTION 23 37 13 - AIR DISTRIBUTION DEVICES

PART 1 - GENERAL

1.1 SECTION REQUIREMENTS

A. Submittals: Product Data and color charts for factory finishes.

PART 2 - PRODUCTS

2.1 CEILING DIFFUSERS

A. Square Plaque Ceiling Diffusers:

1. Basis-of-Design Product: Subject to compliance with requirements, provide Price; ASPD.
2. Devices shall be specifically designed for variable-air-volume flows.
3. Material: Aluminum.
4. Finish: Baked enamel, white.
5. Face Size: 24 by 24 inches (600 by 600 mm) unless indicated otherwise.
6. Face Style: Plaque.
7. Pattern: Fixed.
8. Dampers: Radial opposed blade.

2.2 REGISTERS AND GRILLES

A. Adjustable Bar Register:

1. Basis-of-Design Product: Subject to compliance with requirements, provide Price; 620DAL.
2. Material: Aluminum.
3. Finish: Baked enamel, white.
4. Face Blade Arrangement: Vertical spaced 3/4 inch (19 mm) apart.
5. Core Construction: Removable.
6. Rear-Blade Arrangement: Horizontal spaced 3/4 inch (19 mm) apart.
7. Frame: 1 inch (25 mm) wide.
8. Mounting: Countersunk screw.
9. Damper Type: Adjustable opposed blade.

B. Fixed Face Register:

1. Basis-of-Design Product: Subject to compliance with requirements, provide Price; 635DAL/FL.
2. Material: Aluminum.
3. Finish: Baked enamel, white.

4. Face Arrangement: 45 degree louvered blades, ½" spacing.
5. Core Construction: Integral.
6. Frame: 1 inch (25 mm) wide.
7. Mounting: Countersunk screw or lay in as required by ceiling type.
8. Damper Type: Adjustable opposed blade.

C. Fixed Face Grille:

1. Basis-of-Design Product: Subject to compliance with requirements, provide Price; 635FL.
2. Material: Aluminum.
3. Finish: Baked enamel, white.
4. Face Arrangement: 35 degree louvered blades, ½" spacing.
5. Core Construction: Integral.
6. Frame: 1 inch (25 mm) wide.
7. Mounting: Countersunk screw or lay in as required by ceiling type.

PART 3 - EXECUTION

3.1 INSTALLATION

A. Install diffusers, registers, and grilles level and plumb.

B. Ceiling-Mounted Outlets and Inlets: Drawings indicate general arrangement of ducts, fittings, and accessories. Make final locations where indicated, as much as practical. For units installed in lay-in ceiling panels, locate units in the center of panel unless otherwise indicated. Where architectural features or other items conflict with installation, notify Architect for a determination of final location.

C. After installation, adjust diffusers, registers, and grilles to air patterns indicated, or as directed, before starting air balancing.

END OF SECTION

SECTION 23 81 19 - AIR-HANDLING UNITS

PART 1 - GENERAL

1.1 QUALITY ASSURANCE

A. Manufacturer Qualifications: Company specializing in manufacturing the products specified in this section with minimum of five years documented experience.

B. Units shall be manufactured in a facility registered to ISO 9001 manufacturing quality standard.

C. Air-handling unit assembly shall have UL 1995 certification for safety, including use with electric heat.

D. Products requiring electric connection shall be listed and classified by ETL and CSA as suitable for the purpose specified and indicated.

E. Coil performance shall be certified in accordance with AHRI Standard 410, latest edition.

F. Unit performance shall be rated in accordance with AHRI Standard 430 for Central Air Handling Units and subject to verification of rating accuracy by AHRI-sponsored, third party testing. Units shall meet NFPA 90A requirements.

1.2 DELIVBERY, STORAGE AND PROTECTION

A. All indoor units, painted or unpainted, shall be completely shrink-wrapped from the factory for protection during shipment. Tarping of bare units is unacceptable.

B. Inspect for transportation damage and store in clean dry place and protect from weather and construction traffic. Handle carefully to avoid damage to components, enclosures, and finish.

1.3 SUBMITTALS

A. Product Data: Include manufacturer's technical data for each AHU, including rated capacities, dimensions, required clearances, characteristics, furnished specialties, and accessories.

B. Shop Drawings: Detail equipment assemblies and indicate dimensions, weights, loads, required clearances, method of field assembly, components, and location and size of each field connection.

1. Wiring Diagrams: Power, signal, and control wiring.

C. Delegated-Design Submittal: For AHU supports indicated to comply with performance requirements and design criteria, including analysis data signed and sealed by the qualified professional engineer responsible for their preparation.

1. Design Calculations: Calculate requirements for selecting vibration isolators and for designing vibration isolation bases.
2. Detail mounting, securing, and flashing of roof curb to roof structure. Indicate coordinating requirements with roof membrane system.

3. Restraint Details: Detail fabrication and attachment of wind and seismic restraints and snubbers. Show anchorage details and indicate quantity, diameter, and depth of penetration of anchors.

D. Field quality-control test reports.

E. Operation and Maintenance Data: For RTUs to include in emergency, operation, and maintenance manuals.

F. Warranty: Special warranty specified in this Section.

1.4 QUALITY ASSURANCE

A. ARI Compliance:

1. Comply with ARI 210/240 and ARI 340/360 for testing and rating energy efficiencies for RTUs.
2. Comply with ARI 270 for testing and rating sound performance for RTUs.

B. ASHRAE Compliance:

1. Comply with ASHRAE 15 for refrigeration system safety.
2. Comply with ASHRAE 33 for methods of testing cooling and heating coils.
3. Comply with applicable requirements in ASHRAE 62.1-2010, Section 5 - "Systems and Equipment" and Section 7 - "Construction and Startup."

C. ASHRAE/IESNA 90.1-2010 Compliance: Applicable requirements in ASHRAE/IESNA 90.1-2010, Section 6 - "Heating, Ventilating, and Air-Conditioning."

D. NFPA Compliance: Comply with NFPA 90A and NFPA 90B.

E. UL Compliance: Comply with UL 1995.

F. Electrical Components, Devices, and Accessories: Listed and labeled as defined in NFPA 70, Article 100, by a testing agency acceptable to authorities having jurisdiction, and marked for intended use.

1.5 WARRANTY

A. Special Warranty: Manufacturer's standard form in which manufacturer agrees to replace components of AHUs that fail in materials or workmanship within specified warranty period.

1. Warranty Period for Compressors: Manufacturer's standard, but not less than five years from date of Substantial Completion.
2. Warranty Period for Solid-State Ignition Modules: Manufacturer's standard, but not less than three years from date of Substantial Completion.
3. Warranty Period for Control Boards: Manufacturer's standard, but not less than three years from date of Substantial Completion.

1.6 EXTRA MATERIALS

A. Furnish extra materials described below that match products installed and that are packaged with protective covering for storage and identified with labels describing contents.

1. Fan Belts: One spare set for each belt-driven fan.
2. Filters: Three sets of filters for each unit.

PART 2 - PRODUCTS

2.1 GENERAL DESCRIPTION

A. Units shall ship in the number of sections necessary to meet project requirements and shall ship in as many splits as specified in selection software. Split options as follows:
   1. Shipped in sections — shipping split.
   2. Shipped assembled.

B. Unit shall be factory-supplied, central station air handler. The air-handling unit may consist of a fan with the following factory-installed components as indicated on the equipment schedule.
   1. Mixing Box Section:
      a. With angle filter tracks.
      b. No filter tracks.
   2. Air Mixer Section.
   3. Plenum Section:
      a. With drain pan.
      b. No drain pan.
   4. Filter Section:
      a. Side loading 2 inch angle filters with frame.
   5. Coil Sections:
      a. Chilled water coil.
      b. Electric coil.
   6. Fan Section:
      a. Horizontal draw-thru (supply, and return).

2.2 CASING

A. Construction:
   1. Unit shall be constructed of a complete frame with easily removable panels. Removal of any panel shall not affect the structural integrity of the unit.
   2. All units shall be supplied with 14-gage or heavier, G-90 galvanized steel base rails that can be attached to channel supports to hangout from on structure. Bolt legs are NOT acceptable. Perimeter lifting lugs for overhead lifting shall be provided on each shipping section. Slinging units in place of lifting lugs shall not be acceptable.
   3. Unit shall be thermally broken to minimize the conduction path from the inside of the casing to the outside.
   4. Casing panels (top, sides, and bottom) shall be constructed of galvanized steel, and shall have one of the following exterior finishes as specified:
      a. Pre-painted with a baked enamel, finish per architects color choice, passing 500-hour salt spray test (ASTM B-117).
   5. Casing panels (top, sides, and bottom) shall be constructed of galvanized steel, and shall have the following interior finishes as specified:
      a. Pre-coated with a silver zeolite antimicrobial material registered by the US EPA for use in HVAC applications.
   6. Casing deflection shall not exceed a 1:200 ratio when subject to an internal pressure of ± 8-in. wg. Casing leakage rate shall be less than 1% at 8 in. wg of nominal unit airflow or 50 cfm, whichever is greater. Leakage rate shall be tested and documented on a routine

basis on random production units. Optionally, factory witness leak testing and/or test reports shall be available.

7. Side panels shall be easily removable for access to unit and shall seal against a full perimeter automotive style gasket to ensure a tight seal.
8. The panel retention system shall comply with UL 1995 which states all moving parts (for example, fan blades, blower wheels, pulleys, and belts) that, if accidentally contacted, could cause bodily injury, shall be guarded against accidental contact by an enclosure requiring tools for removal.
9. Accessibility options shall be as follows:
    a. Hinged double-wall access door on side required to be accessible with removable access panel(s) on the other side.
    b. Removable double-wall access panels on both sides.
10. Accessories. Provide:
    a. Thermal pane reinforced glass viewports shall be factory-installed on the access panel(s) or door(s) of the section.
    b. Marine lights shall be factory installed with or without GFCI (ground fault circuit interrupter) convenience outlets.
11. Fan supports, structural members, panels, or flooring shall not be welded, unless aluminum, stainless steel, or other corrosion-resistant material is used. Painted welds on unit exterior steel or galvanized steel are not acceptable.
12. All coil sections shall be double-wall construction with insulation sealed between the inner and outer panels. Panel assemblies shall not carry an R-value of less than 13. Single height coil sections shall have removable frame sections to facilitate vertical coil extraction.

B. Access Doors:
1. Access doors shall be one piece, double-wall construction with insulation sealed between the inner and outer panels. Panel assemblies shall not carry an R-value of less than 13.

C. Drain Pans:
1. Drain pans shall be stainless steel construction. The pan shall be sloped toward the drain connection. Drain pan shall have 11/2-in. MPT connection exiting through the hand side or opposite side of the casing as specified. One drain outlet shall be supplied for each cooling coil section. Drain pan shall allow no standing water and comply with ASHRAE Standard 62.1-2010. Where 2 or more coils are stacked in a coil bank, intermediate drain pans shall be provided and the condensate shall be piped to the bottom drain pan. The bottom coil shall not serve as a drain path for the upper coil.

2.3 AIR HANDLING UNITS (AHU-5)

A. Manufacturers
1. Basis-of-Design Product: Subject to compliance with requirements, provide the product indicated on Drawings or a comparable product by one of the following:
    a. Carrier Corporation.
    b. Lennox Industries Inc.
    c. McQuay International.
    d. Trane; American Standard Companies, Inc.
    e. YORK International Corporation.

B. General
1. Provide factory-installed microprocessor controls. Operating range for units with electromechanical controls shall be between 115°F and 40°F. Cooling performance shall be rated in accordance with AHRI testing procedures. All units shall be factory assembled, internally wired, fully charged with R-410A, and 100 percent run tested to check cooling operation, fan and blower rotation, and control sequence before leaving the factory.

Wiring internal to the unit shall be colored and numbered for simplified identification. Units shall be cULus listed and labeled, classified in accordance for Central Cooling Air Conditioners. Controls shall be compatible with existing building HVAC Control System by KMC.

C. Accessories
   1. Hinged access doors for filter/evaporator section, fan section, and compressor/control section.

2.4 FANS

A. General:
   1. Backward incline or airfoil fan sections shall have one DWDI airfoil fan wheel and scroll. Airfoil blades shall be double thickness design constructed of heavy gage, high strength steel or aluminum continuously welded to the backplate and the spun inlet flange. Entire fan assembly shall be cleaned, primed and painted with alkyd enamel, except for an aluminum fan wheel when supplied. Fans shall have an AMCA class rating corresponding to the static pressure at which the fan is designed to operate (Class I, II, or III). Completed fan assembly shall be dynamically balanced to minimum grade of G 6.3 per ANSI/ AMCA 204-96 at design operating speed using contract drive and motor if ordered.
   2. Fan assembly vibration shall not exceed 0.248 in. per second when mounted on active isolators. Vibration shall be measured in both vertical and horizontal directions at the specified fan operating speed using specified motor. Accelerometers shall be mounted on the motor near the bearing locations.
   3. All fan sled components shall provide corrosion protection to pass 100-hour salt spray test per ASTM B-117.
   4. Fan wheels shall be keyed to the shaft and shall be designed for continuous operation at maximum rated fan speed and motor horsepower. Fan wheels and shafts shall be selected with a maximum operating speed 25% below the first critical.
   5. Belt drive fan motor shall be mounted within the fan section casing on slide rails equipped with adjusting screws. Motor shall be premium efficiency, open drip-proof or totally enclosed fan cooled NEMA Design A or B with size and electrical characteristics as shown on the equipment schedule. Motor shall be mounted on a horizontal flat surface and shall not be supported by the fan or its structural members. All three-phase motors shall have a ± 10% voltage utilization range and a 1.15 minimum service factor. Motor shall be compliant with the Energy Independence and Security Act (EISA) of 2007 where applicable. Single-phase motors shall be available up to and including 5 hp.

B. Performance Ratings:
   1. Fan performance shall be rated and certified in accordance with AHRI Standard 430, latest edition.

C. Sound Ratings:
   1. Manufacturer shall submit first through eighth octave sound power for fan discharge and casing radiated sound. Sound ratings shall be tested in accordance with AHRI 260.

D. Mounting:
   1. Fan scroll, wheel, shaft, bearings, drives, and motor shall be mounted on a common base assembly. The base assembly is isolated from the outer casing with factory-installed isolators and rubber vibration absorbent fan discharge seal. A canvas style duct connection between fan discharge and cabinet is not acceptable. Units shall use 2-in. deflection spring isolators.

E. Fan Accessories:

1. Airfoil Fans:
    a. Variable frequency drives with or without bypass.
    b. Magnetic motor starters.
    c. Motor disconnects.
    d. Belt guards.
    e. Inlet screen.

F. Flexible Connection:
1. The base assembly is isolated from the outer casing with factory-installed isolators and rubber vibration absorbent fan discharge seal. A canvas style duct connection between fan discharge and cabinet is not acceptable.

2.5 BEARINGS AND DRIVES

A. Bearings:
1. Self-aligning, grease lubricated, anti-friction with lubrication fittings extended to drive side of fan section. Optional grease fittings extended to the exterior of the casing are available. All bearing life calculations shall be done in accordance with ABMA 9 for ball bearings and ABMA 11 for roller bearings.
2. Heavy-duty pillow block type, self-aligning, regreasable ball or roller type bearings selected for a minimum average life (L50) of 200,000 hours or optionally for an (L50) of 500,000 hours.

B. Shafts:
1. Fan shafts shall be solid steel, turned, ground, polished and coated with a rust inhibitor.

C. V-Belt Drive:
1. Drive shall be designed for a minimum 1.2 service factor as standard with a 1.5 service factor option and/or a factory-supplied extra set of belts. Drives shall be fixed pitch with optional variable pitch for motors 15 hp and less. All drives shall be factory mounted, with sheaves aligned and belts properly tensioned.

2.6 COILS

A. Water coils shall be provided to meet the scheduled performance. All coil performance shall be certified in accordance with AHRI Standard 410. All water coils shall be tested at 450 psig air pressure. Factory-supplied 1/2-in. OD coils shall be covered under the standard product one-year limited warranty. Coil epoxy coating shall be covered under a 5-year limited warranty from the date of shipment from the manufacturer.

B. General Fabrication:
1. Water coils shall have minimum 1/2-in. OD copper tubes mechanically expanded into fins to ensure high thermal performance with lower total flow and pumping requirements. Minimum tube wall thickness shall be 0.016 inches. Optional tube wall thickness of 0.025 in. shall be supplied, if specified.
2. Optionally, water coils shall have minimum 5/8-in. OD copper tubes mechanically expanded into fins to ensure high thermal performance with lower total flow and pumping requirements. Minimum tube wall thickness shall be 0.020 inches. Optional tube wall thickness of 0.035 in. shall be supplied, if specified.
3. Aluminum plate fin type with belled collars. Optional copper plate fins shall be supplied, if specified.

4. Aluminum-finned coils shall be supplied with die-formed casing and tube sheets of mill galvanized steel or stainless steel as specified. Copper-finned coils shall be supplied with stainless steel casing and tube sheets.

C. Hydronic Cooling Coils:
1. Headers shall be constructed of steel with steel MPT connections. Headers shall have drain and vent connections accessible from the exterior of the unit. Optional non-ferrous headers and red brass MPT connections shall be supplied if specified.
2. Configuration: Coils shall be drainable, with non-trapping circuits. Coils will be suitable for a design working pressure of 300 psig at 200 F.

D. Electric Heating Section:
1. The electric heater casing is constructed of galvanized steel. Heater control box access door shall be mounted on the designated hand side of the unit. Element construction as follows:
   a. Sheathed type, 80% nickel, 20% chromium resistance coils, suspended in a magnesium oxide insulator fill within a tubular steel sheath/brazed fin assembly. Silicone rubber end seals shall prevent contamination of the interior, and the exterior shall be protected from corrosion by a high temperature aluminum coating. Thermal cutouts for overtemperature protection shall be provided to meet UL and NEC requirements. Maximum element heating density shall be 55 watts/sq inch.
      1) Contactor control - electric heaters up through 60 kW shall have 3 stages of control, beyond 60 kW shall have 6 stages of control.
2. The manufacturer shall furnish an integral control box containing thermal cutouts, primary control, subcircuit fusing, airflow switch, and fused control transformer.
3. Electric heaters shall be UL listed for zero clearance and shall meet all applicable National Electric Code requirements.
4. Units with electric heat sections shall be listed under UL 1995 Standard for Safety.

2.7 FILTER SECTIONS

A. Angle filter sections shall accept either 2-in. or 4-in. filters of standard sizes, arranged in a horizontal V formation. Shall include side access slide rails for easy removal.

B. Magnehelic Gages:
1. Housing shall be constructed of a die cast aluminum case and bezel with acrylic cover. Exterior finish shall be coated gray to withstand 168 hr salt spray corrosion test.
2. Accuracy shall be ±2% of full scale throughout range at 70 F (21.1 C).
3. Pressure limits shall be –20 in. Hg to 15 psig (0.677 bar to 1.034 bar).
4. Overpressure relief plugs shall open at approximately 25 psig (1.72 kPa).
5. Temperature limits shall be 20 to 140 F (–6.67 to 60 C).
6. Diameter of dial face shall be 4 in. (101.6 mm).
7. Process connections shall be 1/8-in. female NPT duplicate high and low pressure taps — one pair side and one pair back.

2.8 DAMPERS

A. Factory-supplied dampers shall be warranted to be free from defects in material and workmanship for a period of 12 months after being installed or placed in service, but in no instance shall the period of warranty be longer than 18 months from the date of the original shipment by the manufacturer.

B. Mixing boxes, filter-mixing boxes, and exhaust boxes shall have parallel or opposed blades and interconnecting outside-air and return-air dampers.

1. Dampers:
   a. Damper blades shall be constructed of galvanized steel, with blade seals and stainless steel jamb seals. Blades shall be mechanically fastened to axle rods rotating in self-lubricating synthetic bearings. Maximum leakage rate shall be 4 cfm/ft2 at 1 in. wg (0.25 kPa) differential pressure.
2. Outside Air Measurement Dampers:
   a. Damper frame shall be nominal 4 in. x 1 in. x minimum 0.081 in. (102 mm x 25 mm x minimum 2 mm) and constructed of 6063-T5 extruded aluminum.
   b. Airflow measuring blades shall be airfoil-shaped, heavy gage anodized 6063-T5 extruded aluminum and fixed in 10 in. x minimum 16 gage (254 mm x minimum 1.5 mm) galvanized steel frame.
   c. Jamb seals shall be flexible metal compression type along control damper sides.
   d. Blade seals shall be neoprene along control damper blade edges.
   e. Bearings shall be molded synthetic.
   f. Linkage shall be galvanized steel, concealed in frame.
   g. Axles shall be minimum 1/2-in. (13 mm) diameter plated steel, hex-shaped, mechanically attached to blade.
   h. Operating temperature shall be –22 to 140 F (–30 to 60 C).
   i. Air straightener section shall be aluminum alloy honeycomb contained in 5 in. (127 mm) long, 16 gage (1.5 mm) galvanized steel sleeve attached to monitoring blade frame.
   j. Airflow range shall be 400 to 5,000 ft per minute (122 to 1524 m/min) face velocity.
   k. Maximum leakage rate shall be 2 cfm/ft2 at 1 in. wg (0.25 kPa) differential pressure.

2.9 AIR MIXER

A. Air mixer of 0.081-in. aluminum construction of size, performance and maximum pressure drop indicated. The air mixer shall mix two or more airstreams of differing temperature to within +/- 6° F of theoretical mixed-air temperature and provide a more uniform air velocity contour entering a downstream filter or coil bank.

2.10 ELECTRICAL ACCESSORIES:

A. Marine Lights and Convenience Outlets:
1. Cast, non-ferrous metal, weatherproof, fixture.
2. Cast, non-ferrous metal, weatherproof, electrical junction box.
3. Gasketed, heat and shock resistant glass globe protects against moisture and debris.
4. Cast, non-ferrous metal lamp guard to protect glass globe.
5. UL listed.
6. 100 watt type ‘A’ lamp maximum capacity.
7. Each fixture is equipped with a 75 watt, 130 volt, long life, vibration resistant, lamp (8000+ hour typical lamp life), factory installed.
8. Metallic, single gang, electrical junction box, UL listed.
9. With convenience outlet: Factory supplied and wired, SPST, toggle switch and 15 amp, 120 vac/60 Hz, NEMA 5-15 type, ground fault circuit interrupt (GFCI) receptacle, UL listed.
10. Without convenience outlet: Factory supplied and wired, SPST, UL listed toggle switch.
11. Each fixture is factory wired to an externally mounted switch box. (Field power connections are made to the switch box mounted externally on the unit.)

12. All factory wiring penetrating through the panel is protected in 'RIGID' type metal conduit.

B. Disconnects: Factory-supplied disconnects shall be covered under a 1 year limited warranty from the manufacturer from the date of shipment.
   1. 115-230 volt/single-phase non-fused disconnects shall have the following characteristics:
      a. Plated current carrying components for superior corrosion protection.
      b. Factory-installed equipment grounding terminals with slot/square drive screws.
      c. Rated for motor disconnect applications (10 Hp maximum).
      d. NEMA type 3R non-metallic enclosure.
      e. Up to 10,000 rms symmetrical amperes SCCR, when protected by a fuse or circuit breaker rated 60 amperes or less.
      f. Cover padlock hasp.
      g. Pull-out cartridge type.
      h. UL listed.
   2. 115-230 volt/single-phase fused disconnects shall have the following characteristics:
      a. Visible blades.
      b. Quick-make, quick-break operating mechanism.
      c. Cover padlock hasp and handle lock "OFF."
      d. 240 vac maximum.
      e. Factory supplied and installed class 'T Series' fuses (fused disconnects only).
      f. Up to 10,000 rms symmetrical amperes SCCR, utilizing appropriately rated factory-supplied fuses.
      g. Horsepower rated for motor applications.
      h. Tangential combination knockouts for field wiring.
      i. Spring reinforced plated copper fuse clips.
      j. NEMA type 1 enclosures.
      k. Insulated, bondable solid neutral assemblies.
      l. UL listed, File E2875.
      m. Meet or exceed NEMA KS1-1990.
   3. 200-230 volt/3-phase fused and non-fused disconnects shall have the following characteristics:
      a. Visible blades.
      b. Quick-make, quick-break operating mechanism.
      c. Cover padlock hasp and handle lock "OFF."
      d. 240 vac maximum.
      e. Factory supplied and installed class RK5 fuses (fused disconnects only).
      f. Up to 100,000 rms symmetrical amperes SCCR, utilizing appropriately rated, factory-supplied Class R fuses.
      g. Horsepower rated for motor applications.
      h. Tangential combination knockouts for field wiring.
      i. Spring reinforced plated copper fuse clips.
      j. NEMA type 1 enclosures.
      k. Insulated, bondable solid neutral assemblies.
      l. UL listed, File E2875.
      m. Meet or exceed NEMA KS1-1990.

C. Starters: Provide factory-supplied disconnect with a 1 year limited warranty from the manufacturer from the date of shipment.
   1. Combination Starter/Disconnect:
      a. Non-fused UL 508 disconnect switch with lockable handle (locks not provided).
      b. Cover interlock.
      c. Adjustable motor overload with trip indication.
      d. Manual overload reset button (accessible without opening enclosure).

e. 115-v fused secondary control transformer (fuse included — fused primary and secondary over 50 amps).
f. Hand/Off/Auto selector switch (accessible without opening enclosure).
g. Separate 4-position terminal strip for remote H-O-A wiring.
h. C series contactors.
i. Horsepower rated for motor applications.
j. NEMA 4X type non-metallic enclosures.
k. Lug connections for field power wiring.
l. Factory mounted, wired, and run tested with factory-supplied motor.
m. UL listed.

D. Bypass for Variable Frequency Drives: Factory-supplied bypasses shall be covered under a 1 year limited warranty from the manufacturer from the date of shipment.
1. 200-230 v/3 Ph/60 Hz (1 to 7.5 Hp), 460-575 v/3 Ph/60 Hz (1 to 20 Hp), 380 v/3 Ph/50 Hz (1 to 15 Hp):
a. 4-position panel-mounted disconnect style switch with lockable handle (locks not provided), meets OSHA 1910.
b. Switch position indication (LINE/OFF/ DRIVE/TEST).
c. Adjustable motor overload with trip indication (LINE position).
d. Manual overload reset button.
e. Horsepower rated for motor applications.
f. Direct control (no contactors, relays, or holding coils).
g. Complete isolation of inverter in LINE position.
h. NEMA 12 type metal enclosures.
i. Terminal strip provided for field power supply wiring.
j. Lug connection for field ground wire.
k. Gold flashed, auxiliary switch contact set (for switch position monitoring).
l. Factory mounted, wired to VFD and motor, and run tested (motor and VFD must be factory supplied and installed).
m. UL; UL, Canada; CE listed.
2. 200-230 v/3 Ph/60 Hz (10 to 75 Hp), 460-575 v/3 Ph/60 Hz (25 to 150 Hp), 380 v/3 Ph/50 Hz (20 to 75 Hp):
a. 4-position panel-mounted disconnect style switch with lockable handle (locks not provided), meets OSHA 1910.
b. Switch position indication (LINE/OFF/ DRIVE/TEST).
c. Adjustable motor overload with trip indication (in LINE position).
d. Manual overload reset button.
e. Horsepower rated for motor applications.
f. 115-v control transformer with fused secondary (fused primary on units over 50 amps).
g. Contactor for Line Start/Stop.
h. Door-mounted Line Start and Line Stop pushbuttons.
i. Complete isolation of inverter in LINE position.
j. NEMA 12 type metal enclosures.
k. Terminal strip provided for field power supply wiring.
l. Lug connection for field ground wire.
m. Gold flashed, auxiliary switch contact set (for switch position monitoring).
n. Factory mounted, wired to VFD and motor, and run tested (motor and VFD must be factory supplied and installed).
o. UL; UL, Canada; CE listed.

E. Variable Frequency Drives:
1. Factory-mounted variable frequency drives (VFDs) shall be wired to factory-supplied motors.

2. Factory-supplied VFDs are programmed and started up from the factory and qualify the VFD, through ABB, for a 24-month warranty from date of commissioning or 30 months from date of sale, whichever occurs first.
3. The VFD parameters are programmed into the controller and removable keypad. In the event that the VFD fails and needs replacement, the program can then be uploaded to the replacement VFD via the original keypad.
4. The VFD package as specified herein shall be enclosed in a UL Listed type enclosure, exceeding NEMA enclosure design criteria (enclosures with only NEMA ratings are not acceptable), completely assembled and tested by the manufacturer in an ISO 9001 facility. The VFD tolerated voltage window shall allow the VFD to operate from a line of +30% nominal, and –35% nominal voltage as a minimum.
    a. Environmental operating conditions: VFDs shall be capable of continuous operation at –15 to 40 C (5 to 104 F) ambient temperature with no frost allowed as per VFD manufacturers documented/submittal data or VFD must be oversized to meet these temperature requirements. Not acceptable are VFDs that can only operate at 40 C intermittently (average during a 24-hour period) and therefore, must be oversized. VFDs shall be capable of operating at altitude 0 to 3300 ft above sea level and less than 95% humidity, non-condensing. All circuit boards shall have conformal coating.
    b. Enclosure shall be rated UL Type 1 and shall be UL listed as a plenum rated VFD. VFDs without these ratings are not acceptable. Type 1 enclosures with only NEMA rating are not acceptable (must be UL Type 1).
5. All VFDs shall have the following standard features:
    a. All VFDs shall have the same customer interface, including digital display, and keypad, regardless of horsepower rating. The keypad shall be removable, capable of remote mounting and allow for uploading and downloading of parameter settings as an aid for start-up of multiple VFDs.
    b. The keypad shall include Hand-Off-Auto selections and manual speed control. The drive shall incorporate “bumpless transfer” of speed reference when switching between “Hand” and “Auto” modes. There shall be fault reset and “Help” buttons on the keypad. The Help button shall include “on-line” assistance for programming and troubleshooting.
    c. There shall be a built-in timeclock in the VFD keypad. The clock shall have a battery back-up with 10 years minimum life span. The clock shall be used to date and time stamp faults and record operating parameters at the time of fault. If the battery fails, the VFD shall automatically revert to hours of operation since initial power up. Capacitor back-up is not acceptable. The clock shall also be programmable to control start/ stop functions, constant speeds, PID parameter sets and output Form-C relays. The VFD shall have a digital input that allows an override to the timeclock (when in the off mode) for a programmable time frame. There shall be four (4) separate, independent timer functions that have both weekday and weekend settings.
    d. The VFDs shall utilize pre-programmed application macros specifically designed to facilitate start-up. The application macros shall provide one command to reprogram all parameters and customer interfaces for a particular application to reduce programming time. The VFD shall have two user macros to allow the end-user to create and save custom settings.
    e. The VFD shall have cooling fans that are designed for easy replacement. The fans shall be designed for replacement without requiring removing the VFD from the wall or removal of circuit boards. The VFD cooling fans shall operate only when required. To extend the fan and bearing operating life, the VFD shall cycle the cooling fans on and off as required.
    f. The VFD shall be capable of starting into a coasting load (forward or reverse) up to full speed and accelerate or decelerate to set point without tripping or component damage (flying start).

g. The VFD shall have the ability to automatically restart after an overcurrent, over-voltage, under-voltage, or loss of input signal protective trip. The number of restart attempts, trial time, and time between attempts shall be programmable.
h. The overload rating of the drive shall be 110% of its normal duty current rating for 1 minute every 10 minutes, 130% overload for 2 seconds. The minimum FLA rating shall meet or exceed the values in the NEC/ UL table 430.250 for 4-pole motors.
i. The VFD shall have internal 5% impedance reactors to reduce the harmonics to the power line and to add protection from AC line transients. The 5% impedance may be from dual (positive and negative DC bus) reactors, or 5% AC line reactors. VFDs with only one DC reactor shall add an AC line reactor.
j. The input current rating of the VFD shall be no more than 3% greater than the output current rating. VFDs with higher input current ratings require the upstream wiring, protection devices, and source transformers to be oversized per NEC 430.120. Input and output current ratings must be shown on the VFD nameplate.
k. The VFD shall include a coordinated AC transient surge protection system consisting of 4 to 120 joule rated MOVs (phase to phase and phase to ground), a capacitor clamp, and 5% impedance reactors.
l. The VFD shall provide a programmable loss-of-load (broken belt/broken coupling) Form- C relay output. The drive shall be programmable to signal the loss-of-load condition via a keypad warning, Form-C relay output, and/or over the serial communications bus. The loss-of-load condition sensing algorithm shall include a programmable time delay that will allow for motor acceleration from zero speed without signaling a false loss-of-load condition.
m. The VFD shall have user programmable underload and overload curve functions to allow user defined indications of broken belt or mechanical failure/jam condition causing motor overload
n. The VFD shall include multiple “two zone” PID algorithms that allow the VFD to maintain PID control from two separate feedback signals (4-20mA, 0-10V, and/or serial communications). The two zone control PID algorithm will control motor speed based on a minimum, maximum, or average of the two feedback signals. All of the VFD PID controllers shall include the ability for “two zone” control.
o. If the input reference (4-20mA or 2-10V) is lost, the VFD shall give the user the option of either (1) stopping and displaying a fault, (2) running at a programmable preset speed, (3) hold the VFD speed based on the last good reference received, or (4) cause a warning to be issued, as selected by the user. The drive shall be programmable to signal this condition via a keypad warning, Form-C relay output and/or over the serial communication bus.
p. The VFD shall have programmable “Sleep” and “Wake up” functions to allow the drive to be started and stopped from the level of a process feedback signal.

6. The keypad shall include a backlit LCD display. The display shall be in complete English words for programming and fault diagnostics (alphanumeric codes are not acceptable). All VFD faults shall be displayed in English words. The keypad shall include a minimum of 14 assistants including:
   a. Start-up assistant
   b. Parameter assistants
   c. PID assistant
   d. Reference assistant
   e. I/O assistant
   f. Serial communications assistant
   g. Option module assistant
   h. Panel display assistant
   i. Low noise set-up assistant
   j. Maintenance assistant
   k. Troubleshooting assistant
   l. Drive optimizer assistants

7. All applicable operating values shall be capable of being displayed in engineering (user) units. A minimum of three operating values from the list below shall be capable of being displayed at all times. The display shall be in complete English words (alpha-numeric codes are not acceptable):
    a. Output Frequency
    b. Motor Speed (RPM, %, or Engineering units)
    c. Motor Current
    d. Motor Torque
    e. Motor Power (kW)
    f. DC Bus Voltage
    g. Output Voltage
8. The VFD shall include a fireman's override input. Upon receipt of a contact closure from the fire / smoke control station, the VFD shall operate in one of two modes: 1) Operate at a programmed predetermined fixed speed ranging from –500 Hz (reverse) to 500 Hz (forward). 2) Operate in a specific fireman's override PID algorithm that automatically adjusts motor speed based on override set point and feedback. The mode shall override all other inputs (analog/digital, serial communication, and all keypad commands), except customer defined safety run interlocks, and force the motor to run in one of the two modes above. "Override Mode" shall be displayed on the keypad. Upon removal of the override signal, the VFD shall resume normal operation, without the need to cycle the normal digital input run command.
9. Serial Communications shall communicate with existing KMC Control System:
    a. The BACnet connection shall be an EIA-485, MS/TP interface operating at 9.6, 19.2, 38.4, or 76.8 Kbps. The connection shall be tested by the BACnet Testing Labs (BTL) and be BTL Listed. The BACnet interface shall conform to the BACnet standard device type of an Applications Specific Controller (B-ASC). The interface shall support all BIBBs defined by the BACnet standard profile for a B-ASC including, but not limited to:
        1) Data Sharing – Read Property – B.
        2) Data Sharing – Write Property – B.
        3) Device Management – Dynamic Device Binding (Who-Is; I-Am).
        4) Device Management – Dynamic Object Binding (Who-Has; I-Have).
        5) Device Management – Communication Control – B.
    b. If additional hardware is required to obtain the BACnet interface, the VFD manufacturer shall supply one BACnet gateway per drive. Multiple VFDs sharing one gateway shall not be acceptable.
    c. Serial communication capabilities shall include, but not be limited to; run-stop control, speed set adjustment, proportional/ integral/derivative PID control adjustments, current limit, accel/decel time adjustments, and lock and unlock the keypad. The drive shall have the capability of allowing the DDC to monitor feedback such as process variable feedback, output speed / frequency, current (in amps), % torque, power (kW), kilowatt hours (resettable), operating hours (resettable), and drive temperature. The DDC shall also be capable of monitoring the VFD relay output status, digital input status, and all analog input and analog output values. All diagnostic warning and fault information shall be transmitted over the serial communications bus. Remote VFD fault reset shall be possible.
    d. The VFD shall include an independent PID loop for customer use. The independent PID loop may be used for cooling tower bypass valve control, chilled water valve / hot water valve control, etc. Both the VFD PID control loop and the independent PID control loop shall continue functioning even if the serial communications connection is lost. As default, the VFD shall keep the last good set point command and last good DO and AO commands in memory in the event the serial communications connection is lost and continue controlling the process.
10. EMI/RFI filters: All VFDs shall include EMI/RFI filters. The onboard filters shall allow the VFD assembly to be CE Marked and the VFD shall meet product standard EN 61800-

3 for the First Environment restricted level with up to 100 feet of motor cable. No Exceptions. Certified test reports shall be provided with the submittals confirming compliance to EN 61800-3, First Environment.

11. All VFDs through 75 hp at 480 V shall be protected from input and output power mis-wiring. The VFD shall sense this condition and display an alarm on the keypad. The VFD shall not sustain damage from this power mis-wiring condition.
12. Operational Functions:
    a. The drive shall contain two separate acceleration/ deceleration times with auto tuning for optimum setting (0.1 to 6000 seconds) with choice of linear, S, or C curves that shall be factory programmed to match the fan load and prevent nuisance overcurrent fault trips.
    b. The drive shall be equipped with both local/ remote and manual/auto keys on touchpad.
    c. The drive shall be equipped with a quick setup key.
    d. The drive shall contain 15 preset speeds, which can be activated from the keypad, terminal inputs, and host computer.
    e. The drive shall have the capability of storable special custom user setting.
    f. The drive shall restart into a rotating motor operating in either the forward or reverse direction and match that frequency.
    g. The drive shall have adjustable soft stall (10% to 150%) which reduces frequency and voltage of the inverter to sustain a run in an overload situation factory programmed for each motor's characteristics.
    h. The drive shall be capable of performing a time base pattern run using 4 groups of 8 patterns each using the 15 preset speed values for a maximum of 32 different patterns.
    i. The drive shall have adjustable UL listed electronic overload protection (10% to 100%) factory programmed to match each motor's FLA/RLA ratings.
    j. The drive shall have a custom programmable volt/hertz pattern.
13. Protective Features:
    a. The drive shall be rated for 200,000 AIC (ampere interrupting capacity). The use of input fuses to achieve this rating shall not be acceptable.
    b. The drive shall have external fault input.
    c. The drive shall be capable of resetting faults remotely and locally.
    d. The drive shall be programmable to alert the following alarms:
        1) Over torque alarm.
        2) Inverter overload pre-alarm.
        3) Motor overload pre-alarm.
        4) Braking resistor overload pre-alarm.
        5) Inverter overheat pre-alarm.
        6) Undercurrent alarm.
        7) Overcurrent pre-alarm.
        8) Communication error alarm.
        9) Cumulative timer alarm.
        10) Executing retry.
    e. The drive shall identify and display the following faults:
        1) Overcurrent during acceleration trip.
        2) Overcurrent during deceleration trip.
        3) Overcurrent during normal run trip.
        4) Overcurrent on the DC Bus during acceleration trip.
        5) Overcurrent on the DC Bus during deceleration trip.
        6) Overcurrent on the DC Bus during normal run trip.
        7) Load end overcurrent trip detected at start-up (output terminals, motor wiring, etc.).
        8) U-phase short circuit trip detected at start-up.
        9) V-phase short circuit trip detected at start-up.

10) W-phase short circuit trip detected at start-up.
11) Overvoltage during acceleration trip.
12) Overvoltage during deceleration trip.
13) Overvoltage during normal (constant speed) run trip.
14) Inverter overloaded trip.
15) Motor overloaded trip.
16) Inverter overheat trip.
17) Emergency off trip message.
18) EEPROM failure during write cycle.
19) EEPROM abnormality during initial reading.
20) RAM error.
21) ROM error.
22) CPU error.
23) Communication interruption error.
24) Gate array error.
25) Output current detection circuit error.
26) Option PCB error trip.
27) Low operating current trip.
28) Main circuit under voltage trip.
29) Over torque trip.
30) Software detected earth fault trip.
31) Hardware detected earth fault trip.
32) Inverter type form mismatch error.
33) EEPROM type form mismatch error.

14. Monitor Functions:
    a. The drive digital display shall be capable of displaying the following: Frequency, percent current, current amps, percent voltage I/O, voltage in volts I/O, RPM, GPM, I/O watts, torque, and input reference signal, kWh.
    b. The drive shall have 320 programmable parameters which can be changed while the drive is operating.
    c. The drive's 353 parameters shall be adjustable from the 8-key touchpad or computer link.
    d. The drive's 8-key touchpad shall be NEMA 12 rated.
    e. The drive's keypad shall be capable of being extended 15 ft from the drive.
    f. The drive shall contain a reset of all parameters to factory default settings or user defaults (whichever one is chosen).
    g. The drive shall have 2 programmable analog outputs programmable to 17 choices.
    h. The drive shall have one programmable relay output programmable to 67 choices.
    i. The drive shall have 8 programmable digital inputs programmable to 54 choices.
    j. The drive shall have a pulse train out-put proportional to frequency (48, 96, 360 times frequency).
    k. The drive shall have an elapsed time meter.

PART 3 - EXECUTION

3.1 START-UP REQUIREMENTS

A. Shall not be operated until ductwork is clean, filters are in place, bearings lubricated, condensate properly trapped, piping connections verified and leak tested, belts aligned and tensioned, all shipping braces have been removed, and fan has been test run under observation.

3.2 EXAMINATION

A. Examine substrates, areas, and conditions, with Installer present, for compliance with requirements for installation tolerances and other conditions affecting performance of RTUs.

B. Examine roughing-in for AHUs to verify actual locations of piping and duct connections before equipment installation.

C. Examine structural beams for suitable conditions where AHUs will be attached.

D. Proceed with installation only after unsatisfactory conditions have been corrected.

3.3 FIELD QUALITY CONTROL

A. Manufacturer's Field Service: Engage a factory-authorized service representative to inspect, test, and adjust components, assemblies, and equipment installations, including connections. Report results in writing.

B. Tests and Inspections:

1. After installing AHUs and after electrical circuitry has been energized, test units for compliance with requirements.
2. Inspect for and remove shipping bolts, blocks, and tie-down straps.
3. Operational Test: After electrical circuitry has been energized, start units to confirm proper motor rotation and unit operation.
4. Test and adjust controls and safeties. Replace damaged and malfunctioning controls and equipment.

C. Remove and replace malfunctioning units and retest as specified above.

3.4 STARTUP SERVICE

A. Engage a factory-authorized service representative to perform startup service.

B. Complete installation and startup checks according to manufacturer's written instructions and do the following:

1. Inspect for visible damage to unit casing.
2. Inspect for visible damage to furnace combustion chamber.
3. Inspect for visible damage to compressor, coils, and fans.
4. Inspect internal insulation.
5. Verify that labels are clearly visible.
6. Verify that clearances have been provided for servicing.
7. Verify that controls are connected and operable.
8. Verify that filters are installed.
9. Clean condenser coil and inspect for construction debris.
10. Remove packing from vibration isolators.
11. Verify lubrication on fan and motor bearings.
12. Inspect fan-wheel rotation for movement in correct direction without vibration and binding.
13. Adjust fan belts to proper alignment and tension.
14. Start unit according to manufacturer's written instructions.

a. Start refrigeration system.
b. Do not operate below recommended low-ambient temperature.
c. Complete startup sheets and attach copy with Contractor's startup report.

15. Inspect and record performance of interlocks and protective devices; verify sequences.
16. Operate unit for an initial period as recommended or required by manufacturer.

17. Calibrate thermostats.
18. Adjust and inspect high-temperature limits.
19. Inspect outdoor-air dampers for proper stroke and interlock with return-air dampers.
20. Start cooling system and measure and record the following when ambient is a minimum of 15 degrees F above return-air temperature:

    a. Coil leaving-air, dry- and wet-bulb temperatures.
    b. Coil entering-air, dry- and wet-bulb temperatures.
    c. Outdoor-air, dry-bulb temperature.
    d. Outdoor-air-coil, discharge-air, dry-bulb temperature.

21. Inspect controls for correct sequencing of heating, mixing dampers, refrigeration, and normal and emergency shutdown.
22. Measure and record the following minimum and maximum airflows. Plot fan volumes on fan curve.

    a. Supply-air volume.
    b. Return-air volume.
    c. Relief-air volume.
    d. Outdoor-air intake volume.

23. Verify operation of remote panel including pilot-light operation and failure modes. Inspect the following:
    a. Filter high-pressure differential alarm.
    b. Smoke and firestat alarms.

24. After startup and performance testing and prior to Substantial Completion, replace existing filters with new filters.

3.5 CLEANING AND ADJUSTING

A. Occupancy Adjustments: When requested within 12 months of date of Substantial Completion, provide on-site assistance in adjusting system to suit actual occupied conditions. Provide up to two visits to site during other-than-normal occupancy hours for this purpose.

B. After completing system installation and testing, adjusting, and balancing AHU and air-distribution systems, clean filter housings and install new filters.

3.6 DEMONSTRATION

A. Engage a factory-authorized service representative to train Owner's maintenance personnel to adjust, operate, and maintain AHUs.

END OF SECTION 238119

SECTION 26 05 00 - COMMON WORK RESULTS FOR ELECTRICAL

PART 1 GENERAL - BASIC METHODS AND REQUIREMENTS

1.1 DESCRIPTION

A. Related Documents: Drawings and general provisions of Contract, including General and Supplementary Conditions and Division 1 Specification sections, apply to work of this Section.

B. This Section, Basic Methods and Requirements (Electrical) applies to all sections of Division 26.

C. Furnish and install electrical wiring, systems, equipment and accessories in accordance with the specifications and drawings. Generally, capacities and ratings of motors, transformers, cable, switchboards, switchgear, panelboards, and other items and arrangements for the specified items are shown on drawings.

D. Wiring ampacities specified or shown on the drawings are based on copper conductors, with the conduit and raceways accordingly sized. Aluminum conductors are prohibited.

E. The general requirements for Divisions 26, 27, and 28 Commissioning are listed in this document.

1.2 MINIMUM REQUIREMENTS

A. At a minimum, the work shall be in conformance with the following codes:

Code	Title	Year
NFPA 70	National Electric Code	2008
NFPA 72	National Fire Alarm Code	2006
NFPA 101	Life Safety Code	2006
NFPA 780	Lightning Protection Code	2006
FBC	Florida Building Code including 2009 supplements	2007

B. The installation shall also comply with all applicable rules and regulations of local and state laws and ordinances. Include in the work, without extra cost, any labor, materials, services, apparatus and drawings required to comply with all applicable laws, ordinances, rules and regulations. Inform the Architect/Engineer of any work or material which conflict with any applicable codes, standards, laws and regulations before submitting the bid.

C. Drawings and other specification sections shall govern in those instances where requirements are greater than those specified in the above standards.

1.3 TEST STANDARDS

A. All materials and equipment shall be listed, labeled or certified by a nationally recognized testing laboratory to meet Underwriters Laboratories, Inc., standards where test standards have been established. Equipment and materials which are not covered by UL Standards will be accepted provided equipment and material is listed, labeled, certified or otherwise determined to meet safety requirements of a nationally recognized testing laboratory.

B. Definitions:

1. Listed; equipment or device of a kind mentioned which:

a. Is published by a nationally recognized laboratory which makes periodic inspection of production of such equipment.

b. States that such equipment meets nationally recognized standards or has been tested and found safe for use in a specified manner.

2. Labeled; equipment or device is when:

a. It embodies a valid label, symbol, or other identifying mark of a nationally recognized testing laboratory such as Underwriters Laboratories, Inc.

b. The laboratory makes periodic inspections of the production of such equipment.

c. The labeling indicated compliance with nationally recognized standards or tests to determine safe use in a specified manner.

3. Certified; equipment or product is which:

a. Has been tested and found by a nationally recognized testing laboratory to meet nationally recognized standards or to be safe for use in a specified manner.

b. Production of equipment or product is periodically inspected by a nationally recognized testing laboratory.

c. Bears a label, tag, or other record of certification.

4. Nationally recognized testing laboratory; laboratory which approved, in accordance with OSHA regulations, by the Secretary of Labor.

1.4 QUALIFICATIONS (PRODUCTS AND SERVICES)

A. Manufacturer’s Qualifications: The manufacturer shall regularly and presently produce, as one of the manufacturer’s principal products, the equipment and material specified for this project and shall have manufactured the item for at least three years.

B. Product Qualification:

1. Manufacturer’s product shall have been in satisfactory operation, on three installations of similar size and type as this project, for approximately three years.

2. The owner reserves the right to require the contractor to submit a list of installations where the products have been in operation before approval.

C. Service Qualifications: There shall be a permanent service organization maintained or trained by the manufacturer which will render satisfactory service to this installation within four hours of receipt of notification that service is needed. Submit name and address of service organization.

1.5 MANUFACTURED PRODUCTS

A. Materials and equipment furnished shall be of current production by manufacturers regularly engaged in the manufacture of such items, for which replacement parts shall be available.

B. When more than one unit of the same class of equipment is required, such units shall be the product of a single manufacturer.

C. Equipment Assemblies and Components:

1. Components of an assembled unit need not be products of the same manufacturer.
2. Manufacturers of equipment assemblies, which include components made by others, shall assume complete responsibility for the final assembled unit.
3. Components shall be compatible with each other and with the total assembly for the intended service.
4. Constituent parts which are similar shall be the product of a single manufacturer.

D. Factory wiring shall be identified on the equipment being furnished and on all wiring diagrams.

E. When Factory Testing Is Specified :

1. The owner shall have the option of witnessing factory tests. The contractor shall notify the Architect/Engineer a minimum of 15 working days prior to the manufacturers making the factory tests.
2. Four copies of certified test reports containing all test data shall be furnished to the Architect/Engineer prior to final inspection and not more than 90 days after completion of the tests.
3. When equipment fails to meet factory test and reinspection is required, the contractor shall be liable for all additional expenses, including the expenses of the owner.

1.6 EQUIPMENT REQUIREMENTS

A. Where variations from the contract requirements are requested in accordance with Divisions 00 and 01, the connecting work and related components shall include, but not be limited to additions or changes to branch circuits, circuit protective devices, conduits, wire, feeders, controls, panels and installation methods.

B. No substitution will be considered unless written request has been submitted to the owner at least ten (10) days prior to the date for receipt of bids.

C. If the owner approves any proposed substitutions, such approval will be set forth in an addendum.

1.7 EQUIPMENT PROTECTION

A. Equipment and materials shall be protected during shipment and storage against physical damage, dirt, moisture, cold and rain:

1. During installation, enclosures, equipment, controls, controllers, circuit protective devices, and other like items, shall be protected against entry of foreign matter; and be vacuum cleaned both inside and outside before testing, operating, final inspection, and repainting if required.

2. Damaged equipment shall be, as determined by the Architect/Engineer, placed in first class operating condition or be returned to the source of supply for repair or replacement.

3. Painted surfaces shall be protected with a factory installed removable heavy kraft paper, sheet vinyl or equal.

4. Damaged paint on equipment and materials shall be refinished with the same quality of paint and workmanship as used by the manufacturer so repaired areas are not obvious.

B. Rough-in:

1. Verify final locations for rough-ins with field measurements and with the requirements of the actual equipment to be connected.

2. Verify above and below counter locations at millwork locations with Architect prior to rough-in.

3. As a general role, receptacle and telecom outlets shall be located 6” centerline to centerline unless otherwise note or prohibited by code.

4. Refer to equipment specifications in Divisions 02 through 28 for additional rough-in requirements.

1.8 WORK PERFORMANCE

A. All electrical work must comply with the requirements of NFPA 70 (NEC), NFPA 70E, OSHA Part 1910 subpart J, OSHA Part 1910 subpart S and OSHA Part 1910 subpart k in addition to other references required by contract.

B. Job site safety and worker safety is the responsibility of the contractor.

C. Electrical work shall be accomplished with all affected circuits or equipment deenergized. When an electrical outage cannot be accomplished in this manner for the required work, the following requirements are mandatory :

1. Electricians must use and wear full protective equipment (PPE) (i.e., certified and tested insulating material to cover exposed energized electrical components, certified and tested insulated tools, etc.) while working on energized systems in accordance

with NFPA 70E. The level of PPE shall be determined by a computer generated arc flash calculation provided and paid for by the contractor. The arc flash data shall be presented with the work plan below.

2. Work on energized circuits or equipment cannot begin until prior written approval is obtained from the owner.

D. Arrange, phase and perform work to ensure electrical service is not interrupted for other buildings at all times. Refer to Section 01 01 00, GENERAL REQUIREMENTS.

E. New work shall be installed and connected to existing work neatly and carefully. Disturbed or damaged work shall be replaced or repaired to its prior conditions, as required by Divisions 00 and 01.

1.9 EQUIPMENT INSTALLATION AND REQUIREMENTS

A. Equipment location shall be as close as practical to locations shown on the drawings.

B. Working spaces shall not be less than specified in the NEC for all voltages specified.

C. Inaccessible Equipment :

1. Where the owner determines that the contractor has installed equipment not conveniently accessible for operation and maintenance, the equipment shall be removed and reinstalled as directed at no additional cost to the owner.

2. “Conveniently accessible” is defined as being capable of being reached without the use of ladders, or without climbing or crawling under or over obstacles such as, but not limited to, motors, pumps, belt guards, transformers, piping, ductwork, conduit and raceways.:

1.10 DEMOLITION

A. Visit the site before submitting a bid to observe existing conditions.

B. Work shall be performed at such times and under such conditions as suit the convenience of the owner. Plan the work to minimize disruption of normal operations. Notify owner before any existing circuit is de-energized.

C. Where circuit is interrupted by removal of a device or fixture from that circuit, install wire and conduit as required to restore service to the remaining devices and fixtures on that circuit. Ensure proper grounding is maintained.

1.11 ELECTRICAL INSTALLATIONS

A. Make a thorough examination of the site and the contract documents. No claim for extra compensation will be recognized if difficulties are encountered which an examination of site conditions and contract documents prior to executing contract would have revealed.

B. Coordinate electrical equipment and materials installation with other building components.

C. Verify all dimensions by field measurements.

D. Arrange for chases, slots and openings to allow for electrical installations.

E. Coordinate installations of required raceways, boxes, supporting devices, and sleeves to be set in poured-in-place concrete and other structural components, as they are constructed. Sequence, coordinate and integrate installations of electrical materials and equipment for efficient flow of the work. Give particular attention to large equipment requiring positioning prior to closing-in the building.

F. Coordinate the cutting and patching of building components to accommodate the installation of electrical equipment and materials.

G. Install electrical equipment to facilitate maintenance and repair or replacement of equipment components. As much as practical, connect equipment for ease of disconnecting, with minimum of interference with other installations.

H. Coordinate the installation of electrical materials and equipment above ceilings with suspension system, mechanical equipment and systems, and structural components.

I. Temporary electrical service and construction lighting shall be provided under this section. Provide for all electrical service for construction period, making all connections and removal of same at job conclusion. Furnish and install temporary lighting for construction period. At job completion, all temporary lamps shall be removed and replaced with new lamps.

J. All new conduit/raceways within this project area shall be properly supported. Add support to existing conduit as required to comply with NEC.

K. Coordinate location of equipment and conduit with other trades to minimize interference. See Divisions 00 and 01.

1.12 CUTTING AND PATCHING

A. Refer to the Divisions 00 and 01 for general requirements for cutting and patching.

B. Do not endanger or damage installed work through procedures and processes of cutting and patching.

C. Arrange for repairs required to restore other work because of damage caused as a result of electrical installations.

D. No additional compensation will be authorized for cutting and patching that is necessitated by ill-timed, defective, or non-conforming installations.

E. Perform cutting, fitting, and patching of electrical equipment and materials required to :

1. Uncover work to provide installations of ill-timed work.

2. Remove and replace defective work.
3. Remove and replace work not conforming to requirements of the contract documents.
4. Remove samples of installed work as specified for testing.
5. Install equipment and materials in existing structures.
6. Upon written instructions from the Architect/Engineer, uncover and restore work to provide for Architect/Engineer observation of concealed work.

F. Cut, remove and legally dispose of, selected electrical equipment, components, and materials as indicated; including, but not limited to, removal of electrical items indicated to be removed and items made obsolete by the new work.

G. Protect the structure, furnishings, finishes, and adjacent materials not indicated or scheduled to be removed.

H. Provide and maintain temporary partitions or dust barriers adequate to prevent the spread of dust and dirt to adjacent areas.

I. Locate, identify, and protect electrical services passing through remodeling or demolition area and serving other areas required to be maintained operational. When transit services must be interrupted, provide temporary services for the affected areas and notify the owner prior to changeover.

1.13 DELIVERY, STORAGE AND HANDLING

A. Deliver products to project properly identified with names, model numbers, types, grades, compliance labels, and similar information needed for distinct identifications; adequately packaged and protected to prevent damage during shipment, storage, and handling.

B. Store equipment and materials at the site, unless off-site storage is authorized in writing. Protect stored equipment and materials from damage.

C. Coordinate deliveries of electrical materials and equipment to minimize construction site congestion. Limit each shipment of materials and equipment to the items and quantities needed for smooth and efficient flow of installation.

1.14 EQUIPMENT IDENTIFICATION

A. In addition to the requirements of the NEC, install an identification sign which clearly indicates information required for use and maintenance of items such as panelboards, cabinets, motor controllers (starters), safety switches, separately enclosed circuit breakers, individual breakers and controllers in switchboards, switchgear and motor control assemblies, control devices and other significant equipment. See Section 26 05 53.

1.15 SUBMITTALS

A. Submit in accordance with Divisions 00 and 01.

B. Approval shall be obtained for all equipment and material before delivery to the job site. Delivery, storage or installation of equipment or material which has not had prior approval, will not be permitted at the job site.

C. All submittals shall include adequate descriptive literature, catalog cuts, shop drawings and other data necessary for the Architect/Engineer to ascertain that the proposed equipment and materials comply with specification requirements. Catalog cuts submitted for approval shall be legible and clearly identify equipment being submitted.

D. Submittals for individual systems and equipment assemblies which consist of more than one item or component shall be made for the system or assembly as a whole. Partial submittals will not be considered for approval.

1. Mark the submittals, “SUBMITTED UNDER SECTION _____”.
2. Submittals shall be marked to show specification reference including the section and paragraph numbers.
3. Submit each section separately.

E. Submittal of shop drawings, product data, and samples will be accepted only when submitted by the contractor. Data submitted from subcontractors and material suppliers directly to the Architect/Engineer will not be processed.

F. Product Options and Substitutions: Refer to the Instructions to Bidders and the Division 1 Section “Products and Substitutions” for requirements in selecting products and requesting substitutions.

G. Submittals shall include the following :

1. Information that confirms compliance with contract requirements. Include the manufacturer’s name, model or catalog numbers, catalog information, technical data sheets, shop drawings, pictures, nameplate data and test reports as required.
2. Parts list which shall include those replacement parts recommended by the equipment manufacturer, quantity of parts, current price and availability of each part.

H. Record Documents :

1. Refer to the Divisions 00 and 01 for requirements. The following paragraphs supplement the requirements of Division 01.
2. Accurately and clearly red-line clean drawings to indicate revisions to conduit size and location, both exterior and interior; actual equipment locations, dimensioned from column lines; concealed equipment, dimensioned to column lines; distribution and branch electrical circuitry; fuse and circuit breaker size and arrangements; support and hanger details; change orders; concealed control system devices.
3. Accurately and clearly red-line clean specifications to indicate approved substitutions; change orders; actual equipment and materials used.

1.16 SINGULAR NUMBER

A. Where any device or part of equipment is referred to in these specifications in the singular number (e.g., “the switch”), this reference shall be deemed to apply as many such devices as are required to complete the installation as shown on the drawings.

1.17 TRAINING

A. Training shall be provided in accordance with Article, INSTRUCTIONS, of Divisions 00 and 01.

B. Training shall be provided for the particular equipment or system as required in each associated specification.

C. A training schedule shall be developed and submitted by the contractor and approved by the owner at least 30 days prior to the planned training.

1.18 WARRANTIES

A. Refer to the Division 01 Section: SPECIFIC WARRANTIES for procedures and submittal requirements for warranties. Refer to individual equipment specifications for warranty requirements.

B. Compile and assemble the warranties specified in Division 26 into separated set of vinyl-covered, three-ring binders, tabulated and indexed for easy reference.

C. Provide complete warranty information for each item to include product or equipment; date or beginning of warranty or bond; duration of warranty or bond; and names, addresses, and telephone numbers and procedures for filing a claim and obtaining warranty services.

PART 2 GENERAL - ELECTRICAL SYSTEMS COMMISSIONING

2.1 SUMMARY

A. The purpose of this Section is to define Contractor responsibilities in the commissioning process. Other electrical system testing is required under other Division 26 Specification Sections. National Electrical Installation Standards (NEIS) NECA 90-2004, “Recommended Practice for Commissioning Building Electrical Systems”, 27th Volume of the NEIS Series, provides additional guidance for the commissioning of electrical systems.

B. Commissioning requires the participation of the Contractor to ensure that all systems are operating in a manner consistent with the Contract Documents. General Commissioning requirements and coordination are detailed in Division 01. Divisions 26, 27, and 28 shall be familiar with all parts of Division 01 and the Commissioning Plan issued by the Commissioning Agent and shall execute all Commissioning responsibilities assigned to them in the Contract Documents and include the cost of Commissioning in the Contract price.

C. Generally, the electrical contractor (contractor) will provide full documentation to, perform testing as required by, and will fully support the Commissioning Agent throughout the commissioning process for Division 26, 27, and 28 scopes of work.

D. Electrical systems to be commissioned include the following:

1. Secondary Service Electrical Systems.
2. Distribution and Branch Circuit Panelboards.
3. Lighting Fixtures and Controls.
4. Lightning Protection System.
5. Elevator Systems.
6. Equipment Monitoring.
7. Fire Alarm Equipment/Fire Alarm Equipment Monitoring System.
8. AC Motors.
9. Grounding Equipment and Building Grounding System.
10. Access Control.
11. Television Services.
12. IT (Telecommunications) including underground fiber backbone cabling.
13. Video Surveillance.

2.2 REFERENCE STANDARDS

A. The latest published edition of a reference shall be applicable to this Project unless identified by a specific edition date.

B. All reference amendments adopted prior to the effective date of this Contract shall be applicable to this Project.

C. All materials, installation and workmanship shall comply with the applicable requirements and standards.

2.3 DEFINITIONS

A. Commissioning: A systematic process confirming that building systems have been installed, properly started, and consistently operated in strict accordance with the Contract Documents, that all systems are complete and functioning in accordance with the Contract Documents at Substantial Completion, and that Contractor has provided Owner adequate system documentation and training. Commissioning includes deferred and/or seasonal tests as approved by Owner.

B. Commissioning Plan: Document prepared by the Commissioning Agent (CA) and approved by Owner that provides the structure, schedule, and coordination plan for the Commissioning process from the construction phase through the warranty period.

C. Commissioning Team: Working group made up of representative(s) from the Architect/Engineer (A/E), Contractor, Adjust, and Balance (TAB) Firm, Building Automation System (BAS) provider, specialty manufacturers and suppliers, and Owner. Contractor will provide ad-hoc representation of Subcontractors on the Commissioning Team as required for implementation of the Commissioning Plan.

D. Deferred Tests: Functional Performance or Integrated System Tests performed after Substantial Completion due to partial occupancy, partial equipment acceptance, seasonal requirements, design, or other Site conditions that prohibit the test from being performed prior to Substantial Completion.

E. Deficiency: Condition of a component, piece of equipment or system that is not in compliance with Contract Documents.

F. Factory Testing: Testing of equipment at the factory, by factory personnel with an Owner's representative present if deemed necessary by Owner.

G. Coordinate all tests, test procedures, requirements, and commissioning needs with Commissioning Agent.

H. Start-up: The activities where equipment is initially energized, tested, and operated. Start-up is completed prior to Functional Performance Tests.

I. Test Requirements: Requirements specifying what systems, modes and functions, etc. must be tested. Test requirements are not detailed test procedures. Test requirements and acceptance criteria are specified in the Contract Documents.

2.4 SUBMITTALS

A. Documentation required for Commissioning work. At minimum, documentation shall include: Shop drawings, detailed Start-up procedures, Full sequences of operation, Operating and Maintenance data, Performance data, Control Drawings, and details of Owner-Contracted tests.

B. Contractor shall submit installation and checkout materials actually shipped inside equipment and actual field checkout sheet forms used by factory or field technicians.

PART 3 EXECUTION

3.1 PREPARATION

A. Construction Phase:

1. In each purchase order or subcontract that is written for changes in scope, include the following requirements for submittal data, Commissioning documentation, testing assistance, and training, as a minimum.

2. Attend Pre-Commissioning Meeting(s), Pre-Installation Meeting(s), and other Project meetings scheduled to facilitate the Commissioning process.
3. Provide manufacturer's data sheets and shop drawing submittals of equipment.
4. Provide additional requested documentation, for development of Prefunctional Checklist and Functional Performance Tests procedures.
    a. Typically, this will include detailed manufacturer's installation and Start-up, operating, troubleshooting and maintenance procedures, full details of any Owner-contracted tests, full factory testing reports, if any, and full warranty information, including all responsibilities of the Owner to keep the warranty in force clearly identified.
    b. In addition, the installation, Start-up, and checkout materials that are actually shipped inside the equipment and the actual field checkout sheet forms to be used by the factory or field technicians shall be submitted.
    c. This information and data request may be made prior to normal submittals.
5. Address current A/E and Owner punch list items before Functional Performance Tests. Air and water test, adjust and balance shall be completed with discrepancies and problems remedied before Functional Performance Tests of the respective air or water related systems are executed.
6. Provide skilled technicians to execute starting of equipment and to assist in execution of tests. Ensure that they are available and present during the agreed-upon schedules and for a sufficient duration to complete the necessary tests, adjustments, and problem solving.
7. Correct deficiencies (differences between specified and observed performance) as interpreted by the Owner's Project Manager, and A/E and retest the system and equipment.

    During construction, maintain as-built marked-up Drawings and Specifications of all Contract Documents and Contractor-generated coordination Drawings. Update after completion of Commissioning activities (include deferred tests). The as-built drawings and specifications shall be delivered to the Owner both in electronic format and hard copies as required by the Owner.
8. Provide training of the Owner's operating personnel as specified.
9. Coordinate with equipment manufacturers to determine specific requirements to maintain the validity of the warranty.

END OF SECTION

SECTION 26 05 19 - LOW-VOLTAGE ELECTRICAL POWER CONDUCTORS AND CABLES

PART 1 GENERAL

1.1 SUMMARY

A. Section includes building wire and cable; nonmetallic-sheathed cable; direct burial cable; service entrance cable; Communications wiring; and wiring connectors and connections.

B. Related Sections:

1. Section 26 05 00 – Common Work Results for Electrical
2. Section 26 05 26 – Grounding and Bonding for Electrical Systems
3. Section 26 05 33 – Raceway and Boxes for Electrical Systems
4. Section 26 05 53 - Identification for Electrical Systems: Product requirements for wire identification.
5. Section 02320 - Backfill: Requirements for backfill to be placed by this section.
6. Section 02324 - Trenching: Execution requirements for trenching required by this section.
7. Section 07270 – Fire Stopping Systems.

1.2 REFERENCES

Latest Adopted Editions of:

A. International Electrical Testing Association:

1. NETA ATS - Acceptance Testing Specifications for Electrical Power Distribution Equipment and Systems.

B. National Fire Protection Association:

1. NFPA 70 - National Electrical Code.
2. NFPA 262 - Standard Method of Test for Flame Travel and Smoke of Wires and Cables for Use in Air-Handling Spaces.

C. Underwriters Laboratories, Inc.:

1. UL 1277 - Standard for Safety for Electrical Power and Control Tray Cables with Optional Optical-Fiber Members.
2. 44-99 – Thermoset-Insulated Wires and Cables.
3. 83-98 – Thermoplastic-Insulated Wires and Cables.
4. 467-93 – Electrical Grounding and Bonding Equipment.
5. 486A-97 – Wire Connectors and Soldering Lugs for Use with Copper Conductors.
6. 486C-97 – Splicing Wire Connectors
7. 486D-97 – Insulated Wire Connector Systems for Underground Use or in Damp or Wet Locations.

8. 486E-94 – Equipment Wiring Terminals for Use with Aluminum and/or Copper Conductors.
9. 493-95 – Thermoplastic-Insulated Underground Feeder and Branch Circuit Cable.
10. 514B-97 – Fittings for Cable and Conduit
11. 1479-94 – Fire Tests of Through-Penetration Fire Stops.

1.3 SYSTEM DESCRIPTION

A. Cable and Wire shall be:

1. Provide factory-fabricated wires of sizes, ampacity ratings and materials for applications and services indicated.
2. Annealed copper.
3. Conductor insulation shall be dual type THHN/THWN 75°C (167°F) for dry, damp, and wet locations. Conductor insulation with single type marking THHN 90°C (194°F) may be used for dry locations only.
4. Solid conductor for feeders and branch circuits 10 AWG and smaller. Shall be stranded for No. 8 AWG and larger.
5. Stranded conductors for control circuits.
6. Conductors not smaller than 12 AWG for power and lighting circuits.
7. Conductors not smaller than 14 AWG for control circuits.
8. Increase wire size in branch circuits to limit voltage drop to a maximum of 3 percent.
9. Isolated power system wiring: Type XHHW with a dielectric constant of 3.5 or less.

1.4 SPLICES AND JOINTS

A. General: Install electrical cables, wires and wiring connectors as indicated, in compliance with applicable requirements of NEC, NEMA, UL and NECA's "Standard of Installation" and in accordance with recognized industry practices.

B. Branch circuits (No. 10 AWG and smaller):

1. Connectors: Solderless, screw on, reusable pressure cable type, 600 Volt, 105 degree C with integral insulation, approved for copper and aluminum conductors.
2. The integral insulator shall have a skirt to completely cover the stripped wires.
3. The number, size, and combination of conductors, as listed on the manufacturers packaging shall be strictly complied with.
4. Branch circuits over 75 feet in length shall be No. 10 AWG unless otherwise noted.

C. Feeder Circuits:

1. Connectors shall be indent, hex screw, or bolt clamp-type of high conductivity and corrosion-resistant material.
2. Field installed compression connectors for cable sizes 250 kcmil and larger shall have not less than two clamping elements or compression indents per wire.

3. Insulate splices and joints with materials approved for the particular use, location, voltage, and temperature. Insulate with not less than that of the conductor level that is being joined.

4. Plastic electrical insulating tape: Fed Spec. HH-I-595 shall apply including flame retardant, cold and weather resistant.

1.5 CONTROL WIRING

A. Control wiring shall be large enough so that the voltage drop under inrush conditions does not adversely affect operation of the controls.

1.6 COMMUNICATION AND SIGNAL WIRING

A. Shall conform to the recommendations of the manufacturers of the communication and signal systems; however, not less than what is shown.

B. Wiring shown is for typical systems. Provide wiring as required for the systems being furnished.

C. Multi-conductor cables shall have the conductors color-coded.

1.7 WIRE LUBRICATING COMPOUND

A. Suitable for the wire insulation and conduit it is used with, and shall not harden or become adhesive.

B. Shall not be used on wire for isolated type electrical power systems.

1.8 FIREPROOFING TAPE

A. The tape shall consist of a flexible, conformable fabric of organic composition coated one side with flame-retardant elastomer.

B. The tape shall be self-extinguishing and shall not support combustion. It shall be arc-proof and fireproof.

C. The tape shall not deteriorate when subjected to water, gases, salt water, sewage, or fungus and be resistant to sunlight and ultraviolet light.

D. The finished application shall withstand a 200-Ampere arc for not less than 30 seconds.

E. Securing tape: Glass cloth electrical tape not less than 0.18 mm (7 mils) thick, and 19 mm (3/4 inch) wide.

1.9 WARNING TAPE

A. The tape shall be standard, 76 mm (3 inch) wide, 4-Mil polyethylene detectable type.

B. The tape shall be red with black letters indicating “CAUTION BURIED ELECTRIC LINE BELOW”.

1.10 SUBMITTALS

A. Section 01 33 00 - Submittal Procedures: Requirements for submittals.

B. Product Data: Submit for each building and conductor cable assembly type.

C. Certificates; Two weeks prior to final inspection, deliver to the owner four copies of the certification that the material is in accordance with the drawings and specifications and has been properly installed.

1.11 CLOSEOUT SUBMITTALS

A. Section 01 70 00 - Execution and Closeout Requirements: Requirements for submittals.

B. Project Record Documents: Record actual locations of components and circuits.

1.12 QUALITY ASSURANCE

A. Provide wiring materials located in plenums with peak optical density not greater than 0.5, average optical density not greater than 0.15, and flame spread not greater than 5 feet (1.5 m) when tested in accordance with NFPA 262.

B. Perform Work in accordance with Authority Having Jurisdiction's requirements, codes and standards, and standard industry practice.

C. Maintain minimum one copy of each document on site.

1.13 QUALIFICATIONS

A. Manufacturer: Company specializing in manufacturing products specified in this section with minimum three years documented experience. Product shall be manufactured in North America.

1.14 FIELD MEASUREMENTS

A. Verify field measurements are as indicated on Drawings.

1.15 COORDINATION

A. Section 01 30 00 - Administrative Requirements: Requirements for coordination.

B. Where conductors and cable destination is indicated and routing is not shown, determine routing and lengths required.

PART 2 PRODUCTS

2.1 TERMINATIONS

A. Terminal Lugs for Wires 6 AWG and Smaller: Solderless, compression type copper.

B. Lugs for Wires 4 AWG and Larger: Color keyed, compression type copper, with insulating sealing collars.

PART 3 EXECUTION

3.1 EXAMINATION

A. Section 01 30 00 - Administrative Requirements: Coordination and project conditions.

B. Verify interior of building has been protected from weather.

C. Verify mechanical work likely to damage wire and cable has been completed.

D. Verify raceway installation is complete and supported.

3.2 EXISTING WORK

A. Remove exposed abandoned wire and cable, including abandoned wire and cable above accessible ceiling finishes. Patch surfaces where removed cables pass through building finishes.

B. Disconnect abandoned circuits and remove circuit wire and cable. Remove abandoned boxes when wire and cable servicing boxes is abandoned and removed. Install blank cover for abandoned boxes not removed.

C. Provide access to existing wiring connections remaining active and requiring access. Modify installation or install access panel.

D. Extend existing circuits using materials and methods compatible with existing electrical installations and as specified.

E. Clean and repair existing wire and cable remaining or wire and cable to be reinstalled.

3.3 INSTALLATION

A. Route wire and cable to meet Project conditions.

B. Neatly train and lace wiring inside boxes, equipment, and panelboards.

C. Identify and color code wire and cable under provisions of Section 26 05 53 in each junction box, panelboards, and all terminations. Identify each conductor with its circuit number or other designation indicated.

D. Special Techniques--Building Conductors in Raceway:

1. Pull conductors into raceway at same time.
2. Install building wire 4 AWG and larger with pulling equipment.

E. Special Techniques - Cable:

1. Protect exposed cable from damage.
2. Support cables above accessible ceiling, using wire management system, spring metal clips or metal cable ties to support cables from structure. Do not rest cable on ceiling panels.
3. Use suitable cable fittings and connectors.

F. Special Techniques - Wiring Connections:

1. Clean conductor surfaces before installing lugs and connectors.
2. Make splices, taps, and terminations to carry full ampacity of conductors with no perceptible temperature rise.

3. Tape uninsulated conductors and connectors with electrical tape to 150 percent of insulation rating of conductor.
4. Install split bolt connectors for copper conductor splices and taps, 6 AWG and larger.
5. Install solderless pressure connectors with insulating covers for copper conductor splices and taps, 8 AWG and smaller.
6. Install insulated spring wire connectors with plastic caps for copper conductor splices and taps, 10 AWG and smaller.

3.4 INSTALLATION, GENERALLY

A. Install in accordance with the NEC, and as specified.

B. Install all building conductors and wiring in raceway systems unless specifically excluded.

C. Splice cables and wires only in outlet boxes, junction boxes, pull boxes, manholes, or handholes.

D. Install cable supports for all vertical feeders in accordance with the NEC. Provide split wedge type, which firmly clamps each individual cable and tightens due to cable weight.

E. For panelboards, cabinets, wireways, switches, and equipment assemblies, neatly form, train, and tie the cables in individual circuits.

F. Seal cable and wire entering a building from underground, between the wire and conduit where the cable exits the conduit, with a nonhardening approved compound.

G. Wire Pulling:

1. Provide installation equipment that will prevent the cutting or abrasion of insulation during pulling of cables.
2. Use ropes made of nonmetallic material for pulling feeders.
3. Attach pulling lines for feeders by means of either woven basket grips or pulling eyes attached directly to the conductors, as approved by the owner.
4. Pull in multiple cables together in a single conduit.

3.5 SPLICE INSTALLATION

A. Splices and terminations shall be mechanically and electrically secure.

B. Where the owner or Architect/Engineer determines that unsatisfactory splices or terminations have been installed, remove the devices and install approved devices at no additional cost to the owner/architect/engineer.

C. Prior to beginning splice work, obtain owner/architect/engineer’s approval for all splices for conductors No. 3 and larger.

3.6 CONTROL, COMMUNICATION AND SIGNAL WIRING INSTALLATION

A. Unless otherwise specified in other sections of these specifications, install wiring and connect to perform the functions shown and specified in other sections of these specifications.

B. Except where otherwise required, install a separate power supply circuit for each system so that malfunctions in any system will not affect other systems.

C. Where power supply circuits are not shown for systems, connect them to the nearest panelboards of suitable voltages, which are intended to supply such systems and have suitable spare circuit breakers or space for installation.

D. Install a red warning indicator on the handle of the branch circuit breaker for the power supply circuit for each system to prevent accidental de-energizing of the systems.

E. System voltages shall not exceed 120 Volts and shall be lower voltages where shown on the drawings or required by the NEC.

3.7 CONTROL, COMMUNICATION AND SIGNAL SYSTEM IDENTIFICATION

A. Install a permanent wire marker on each wire at each termination.

B. Identifying numbers and letters on the wire markers shall correspond to those on the wiring diagrams used for installing the systems.

C. Wire markers shall retain their markings after cleaning.

D. In each handhole, install embossed brass tags to identify the system served and function.

3.8 FEEDER IDENTIFICATION

A. In each interior pullbox and junction box, install labels on each circuit cables and wires to clearly designate their circuit identification and voltage.

B. In handholes, provide tags of the embossed brass type, and also show the cable type and voltage rating. Attach the tags to the cables with slip-free plastic cable lacing units.

3.9 WIRE COLOR

A. General:

1. Install conductor colors in accordance with the following:

a. Black, red, and blue for circuits at 208/120 volts single or three phase.

b. Brown, orange, and yellow for circuits at 480/277 volts single or three phase.

2. For wire sizes 8 AWG and larger, identify wire with colored tape at terminals, splices and boxes. Colors are as follows:

a. Black, red, and blue for circuits at 208/120 volts single or three phase.

b. Orange, brown, and yellow for circuits at 480/277 volts single or three phase.

B. Neutral Conductors: White. When two or more neutrals are located in one conduit, individually identify each with proper circuit number.

C. Branch Circuit Conductors: Install home runs with each phase uniquely color coded.

D. Parallel Circuit Conductors: Uniquely identify each phase.

E. Ground Conductors:

1. For 6 AWG and smaller: Green.

2. For 4 AWG and larger: Identify with green tape at both ends and visible points including junction boxes.

3.10 FIELD QUALITY CONTROL

A. Section [01 40 00 - Quality Requirements] [01 70 00 - Execution and Closeout Requirements]: Field inspecting, testing, adjusting, and balancing.

B. Inspect and test in accordance with NETA ATS, except Section 4.

C. Perform inspections and tests listed in NETA ATS, Section 7.3.1.

3.11 FIELD TESTING

A. Prior to energization of circuitry, check installed feeder wires and cables with megohm meter to determine insulation resistance levels to ensure requirements are fulfilled. A list of feeders tested shall be submitted to the engineer indicating the insulation resistance level for each cable.

B. Tests shall be performed by megger and conductors shall test free from short-circuits and grounds.

C. Test conductors phase-to-phase and phase-to-ground.

D. The Contractor shall furnish the instruments, materials, and labor for these tests.

END OF SECTION

SECTION 26 05 26 - GROUNDING AND BONDING FOR ELECTRICAL SYSTEMS

PART 1 GENERAL

1.1 SUMMARY

A. This section specifies general grounding and bonding requirements of electrical installations for personnel safety and to provide a low impedance path for possible ground fault currents.

B. “Grounding Electrode system” refers to all electrodes required by NEC, as well as including made, supplementary, lightning protection system and telecommunications system grounding electrodes.

C. The terms “connect” and “bond” are used interchangeably in this specification and have the same meaning.

D. The type of electrical grounding and bonding work specified in this Section includes the following: Solidly Grounded.

E. Applications of electrical grounding and bonding include but are not limited to:

1. Electrical Power Systems.
2. Telecommunications Systems.
3. Low Voltage Systems.
4. Separately Derived Systems.
5. Service Equipment.
6. Raceways and Enclosures.
7. Interior, Exterior, and Site Lighting.
8. Equipment – interior and exterior.

F. Related Sections:

1. Section 03 20 00 - Concrete Reinforcing: Bonding or welding bars when reinforcing steel is used for electrodes.
2. Section 09 69 00 - Access Flooring: Grounding systems for access flooring.
3. Section 26 41 00 - Facility Lightning Protection: Grounding of lightning protection system.
4. Section 33 79 00 - Site Grounding: Site related grounding components for buildings and facilities.

G. Section 26 05 00 COMMON WORK RESULTS FOR ELECTRICAL: General electrical requirements and items that are common to more than one section of Division 26.

H. This section is a part of each Division 26 making reference to grounding specified herein, regardless of voltage level.

1.2 REFERENCES

A. Institute of Electrical and Electronics Engineers:

1. IEEE 142 - Recommended Practice for Grounding of Industrial and Commercial Power Systems.
2. IEEE 1100 - Recommended Practice for Powering and Grounding Electronic Equipment.
3. 142-2007 – Recommended Practice for Grounding of Industrial and Commercial Power Systems

B. International Electrical Testing Association:

1. ANSI/NETA ATS-2009 – Standard for testing specifications for electrical power equipment and systems.

C. National Fire Protection Association:

1. NFPA 70 - National Electrical Code.

D. Underwriters Laboratories, Inc (UL):

1. 44-1999 – Thermoset-Insulated Wires and Cables.
2. 83-1998 – Thermoplastic-Insulated Wires and Cables.
3. 467-1993 – Grounding and Bonding Equipment.
4. 486A – 2000 – Wire Connectors and Soldering Lugs for Use with Copper Conductors.
5. 869 – Electrical Service Equipment.

E. American Society for Testing and Materials (ASTM):

1. B1-2001 – Standard Specification for Hard-Drawn Copper Wire.
2. B8-1999 – Standard Specification for Concentric-Lay-Stranded Copper Conductors, Hard, Medium-Hard, or Soft.

1.3 SYSTEM DESCRIPTION

A. Grounding systems use the following elements as grounding electrodes:

1. Metal underground water pipe.
2. Metal building frame.
3. Concrete-encased electrode.

4. Rod electrode.

1.4 PERFORMANCE REQUIREMENTS

A. Grounding System Resistance: 25 ohms maximum unless otherwise shown on drawings.

1.5 SUBMITTALS

A. Section 01 33 00 - Submittal Procedures: Requirements for submittals.

B. Product Data: Submit data on grounding electrodes and connections.

C. Test Reports: Indicate overall resistance to ground.

D. Manufacturer's Certificate: Certify Products meet or exceed specified requirements.

1.6 CLOSEOUT SUBMITTALS

A. Section 01 70 00 - Execution and Closeout Requirements: Requirements for submittals.

B. Project Record Documents: Record actual locations of components and grounding electrodes.

1.7 QUALITY ASSURANCE

A. Provide grounding materials conforming to requirements of NEC, IEEE 142, and UL labeled.

B. Perform Work in accordance AHJ requirements, codes and standards, and generally accepted industry practices.

1.8 QUALIFICATIONS

A. Manufacturer: Company specializing in manufacturing Products specified in this section with minimum three years documented experience.

B. Installer: Company specializing in performing work of this section with minimum five years documented experience.

1.9 DELIVERY, STORAGE, AND HANDLING

A. Section 01 60 00 - Product Requirements: Requirements for transporting, handling, storing, and protecting products.

B. Accept materials on site in original factory packaging, labeled with manufacturer's identification.

C. Protect from weather and construction traffic, dirt, water, chemical, and mechanical damage, by storing in original packaging.

D. Do not deliver items to project before time of installation. Limit shipment of bulk and multiple-use materials to quantities needed for immediate installation.

1.10 COORDINATION

A. Section 01 30 00 - Administrative Requirements: Requirements for coordination.

B. Complete grounding and bonding of building reinforcing steel prior concrete placement.

PART 2 PRODUCTS

2.1 ROD ELECTRODES

A. Manufacturers:

1. Erico, Inc.
2. O-Z Gedney Co.
3. Thomas & Betts, Electrical
4. Substitutions: Not Permitted.

B. Product Description:

1. Material: Copper-clad steel.

C. Connector: Connector for exothermic welded connection.

2.2 WIRE

A. Material: Stranded copper.

B. Foundation Electrodes: size as shown on drawings.

C. Grounding Electrode Conductor: Copper conductor bare.

D. Bonding Conductor: Copper conductor bare.

2.3 GROUNDING WELL COMPONENTS

A. Well Pipe: 8 inches NPS (DN200) by 24 inches (600 mm) long concrete or fiberglass pipe with belled end.

B. Well Cover: Cast iron or Fiberglass with legend "GROUND" embossed on cover.

2.4 MECHANICAL CONNECTORS

A. Manufacturers:

1. Erico, Inc.
2. ILSCO Corporation.
3. O-Z Gedney Co.
4. Thomas & Betts, Electrical.
5. Substitutions: Not Permitted.

B. Description: Bronze connectors, suitable for grounding and bonding applications, in configurations required for particular installation.

2.5 EXOTHERMIC CONNECTIONS

A. Manufacturers:

1. Copperweld, Inc.
2. ILSCO Corporation.
3. O-Z Gedney Co.
4. Thomas & Betts, Electrical.
5. Substitutions: Not Permitted.

B. Furnish materials in accordance with AHJ requirements and applicable codes and standards.

C. Product Description: Exothermic materials, accessories, and tools for preparing and making permanent field connections between grounding system components.

PART 3 EXECUTION

3.1 EXAMINATION

A. Section 01 30 00 - Administrative Requirements: Verification of existing conditions before starting work.

B. Verify final backfill and compaction has been completed before driving rod electrodes.

3.2 PREPARATION

A. Remove all surface contaminants at connection points.

3.3 EXISTING WORK

A. Modify existing grounding system to maintain continuity to accommodate renovations.

B. Extend existing grounding system using materials and methods as specified.

3.4 INSTALLATION

A. Install in accordance with IEEE 142 and 1100.

B. Install electrical grounding and bonding systems as indicated, in accordance with manufacturer's instructions; applicable portions of NEC, NECA's "Standard of Installation", and in accordance with recognized industry practices, to ensure that products comply with requirements.

C. Permanently ground entire light and power system in accordance with NEC, including service equipment, distribution panels, lighting panelboards, switch and starter enclosures, motor frames, grounding type receptacles, and other exposed non-current carrying metal parts of electrical equipment.

D. Coordinate with other electrical work as necessary to interface installation of electrical grounding and bonding system work with other work.

E. Ground electrical service system neutral at service entrance to the building cold water line, building structural steel, and to a minimum three ground rods spaced minimum six feet (6') apart.

F. Install required number of rod electrodes to achieve specified resistance to ground.

G. System Grounding:

1. Secondary service neutrals: Ground at the supply side of the secondary disconnecting means and at related transformers.

2. Separately derived systems (Transformers downstream from the service entrance): Ground the secondary neutral to separate grounding electrode.

H. Install grounding and bonding conductors concealed from view.

I. Install grounding well pipe with cover at each rod location. Install well pipe top flush with finished grade.

J. Install grounding electrode conductor and connect to reinforcing steel in foundation footing as indicated on Drawings. Electrically bond steel together.

K. Bond together metal siding not attached to grounded structure; bond to ground.

L. Install isolated grounding conductor for circuits as shown on drawings in accordance with IEEE 1100.

M. Equipment Grounding Conductor (E.G.): Install separate, insulated conductor within each feeder and branch circuit raceway. Terminate each end on suitable lug, bus, or bushing.

N. Connect to site grounding system. Refer to Section 33 79 00.

O. Bond to lightning protection system. Refer to Section 26 41 00.

P. Install continuous grounding using underground cold water system (1” Diameter or larger) building steel and driven ground rods as grounding electrode. Where water piping is not available, install artificial station ground by means of driven rods or buried electrodes.

Q. Accomplish grounding of electrical system by using insulated grounding conductor installed within feeder and branch circuit raceway. Grounding conductor sizes in accordance with drawings and NEC. Install from grounding bus of serving panel to ground bus of served panel, grounding screw of receptacles, lighting fixture housing, light switch outlet boxes or metal enclosures of service equipment. Ground conduits by means of grounding bushings on terminations at panelboards with installed number 12 conductor to grounding bus.

R. Ground electrical system using continuous metal raceway system enclosing circuit conductors in accordance with NEC.

S. Permanently attach equipment and grounding conductors prior to energizing equipment.

T. Equipment Grounding: Metallic structures (including ductwork and building steel), enclosures, raceways, junction boxes, outlet boxes, cabinets, machine frames, and other conductive items in close proximity with electrical circuits shall be bonded and grounded.

U. Connect together system neutral, service equipment enclosures, exposed noncurrent carrying metal parts of electrical equipment, metal raceway systems, grounding conductor in raceways and cables, receptacle ground connectors and plumbing systems.

V. All raceways with No. 10 or 12 AWG phase conductors for receptacles, lighting fixtures and similar circuits shall be provided with a parity-sized green equipment ground conductor. Ground conductor shall be installed in entire raceway system, including wall switches and flexible conduit to light fixtures. Equipment ground conductor sizes for circuits with phase conductors larger than No. 12 AWG are indicated on drawings. Ground conductors shall be connected to ground bus in panelboards.

W. Terminate feeder and branch circuit insulated equipment-grounding conductors with grounding lug, bus or bushing. Conductors looped under screw or bolt heads will not be permitted.

X. Install clamp-on connectors on clean metal contact surfaces to ensure electrical conductivity and circuit integrity.

Y. Provide grounding busing and a continuous copper-bonding jumper from the busing to the equipment ground bus in all feeders. The bonding jumper shall be the same size as the equipment ground conductor.

Z. Motors and Starters: Provide lugs in motor terminal box and starter housing or motor control center compartment to terminate equipment grounding conductors.

AA. Receptacles shall not be grounded through their mounting screws. Ground with a jumper from the receptacle green ground terminal to the device box ground screw and the branch circuit equipment grounding conductor.

BB. Ground lighting fixtures to the equipment grounding conductor of the wiring system. Fixtures connected with flexible conduit shall have a green ground wire included with the power wires from the fixture through the flexible conduit to the first outlet box.

CC. Fixed electrical appliances and equipment shall be provided with a ground lug for termination of the equipment grounding conductor.

3.5 INACCESSIBLE GROUNDING CONNECTIONS

A. Make grounding connections which are buried or otherwise normally inaccessible (except connections for which periodic testing access is required) by exothermic weld.

3.6 CONDUCTIVE PIPING

A. Bond all conductive piping systems, interior and exterior, to the building to the grounding electrode system. Bonding connections shall be made as close as practical to the equipment ground bus.

3.7 LIGHTNING PROTECTION SYSTEM

A. Bond the lightning protection system to the electrical grounding electrode system.

3.8 TELECOMMUNICATIONS SYSTEM

A. Bond telecommunications system grounding equipment to the electrical grounding electrode system.

3.9 GROUND ROD INSTALLATION

A. Drive each rod vertically in the earth.

B. Make connections by the exothermic process to form solid metal joints.

C. Where rock prevents the driving of vertical ground rods, install angled ground rods or grounding electrodes in horizontal trenches to achieve the specified resistance.

3.10 GROUNDING FOR RF/EMI CONTROL

A. Install bonding jumpers to bond all conduit, cable trays, sleeves and equipment for low voltage signaling and data communications circuits. Bonding jumpers shall consist of 4”

wide copper strip or two No. 10 copper conductors spaced minimum 4” apart. Use No. 6 copper where exposed and subject to damage.

B. Comply with the following when shielded cable is used for data circuits.

1. Shields shall be continuous throughout each circuit.
2. Connect shield drain wires together at each circuit connection point and insulate from ground. Do not ground shield.
3. Do not connect shields from different circuits together.
4. Shield shall be connected at one end only. Connect shield to signal reference at the origin of the circuit. Consult with equipment manufacturer to determine signal reference.

3.11 FIELD QUALITY CONTROL

A. Section 01400 - Quality Requirements: Field inspecting, testing, adjusting, and balancing.

B. Inspect and test in accordance with NETA ATS, except Section 4.

C. Perform ground resistance testing in accordance with IEEE 142.

D. Perform leakage current tests in accordance with NFPA 99.

E. Perform continuity testing in accordance with IEEE 142.

F. When improper grounding is found on receptacles, check receptacles in entire project and correct. Perform retest.

END OF SECTION

SECTION 26 05 29 - HANGERS AND SUPPORTS FOR ELECTRICAL SYSTEMS

PART 1 GENERAL

1.1 SUMMARY

A. Section Includes:

1. Conduit supports.
2. Formed steel channels.
3. Spring steel clips.
4. Sleeves.
5. Equipment bases and supports.

B. Related Sections:

1. Section 03 30 00 - Cast-In-Place Concrete: Product requirements for concrete for placement by this section.
2. Section 27 05 29 - Hangers and Supports for Communications Systems.
3. Section 28 05 29 - Hangers and Supports for Electronic Safety and Security.

1.2 REFERENCES

A. ASTM International:

ASTM E84	Standard Test Method for Surface Burning Characteristics of Building Materials
ASTM E119	Standard Test Methods for Fire Tests of Building Construction and Materials
ASTM E814	Standard Test Method for Fire Tests of Through-Penetration Fire Stops.
ASTM E1966	Standard Test Method for Fire-Resistive Joint Systems

B. FM Global:

FM	Approval Guide, A Guide to Equipment, Materials & Services Approved By Factory Mutual Research For Property Conservation.

C. National Fire Protection Association:

NFPA 70	National Electrical Code

D. Underwriters Laboratories Inc.:

UL 263	Fire Tests of Building Construction and Materials
UL 723	Tests for Surface Burning Characteristics of Building Materials
UL 1479	Fire Tests of Through-Penetration Firestops
UL 2079	Tests for Fire Resistance of Building Joint Systems
UL	Fire Resistance Directory

1.3 DEFINITIONS

A. Firestopping (Through-Penetration Protection System): Sealing or stuffing material or assembly placed in spaces between and penetrations through building materials to arrest movement of fire, smoke, heat, and hot gases through fire rated construction.

1.4 SYSTEM DESCRIPTION

A. Firestopping Materials: [ASTM E119] [ASTM E814] [UL 263] [UL 1479] to achieve fire ratings as noted on Drawings for adjacent construction, but not less than 1 hour fire rating.

1. Ratings may be 3-hours for firestopping in through-penetrations of 4-hour fire rated assemblies unless otherwise required by applicable codes.

B. Surface Burning: UL 723 with maximum flame spread / smoke developed rating of 25/450.

C. Firestop interruptions to fire rated assemblies, materials, and components.

1.5 PERFORMANCE REQUIREMENTS

A. Firestopping: Conform to applicable code for fire resistance ratings and surface burning characteristics.

B. Firestopping: Provide certificate of compliance from authority having jurisdiction indicating approval of materials used.

1.6 SUBMITTALS

A. Section 01 33 00 - Submittal Procedures: Requirements for submittals.

B. Product Data:

1. Hangers and Supports: Submit manufacturers catalog data including load capacity.

2. Firestopping: Submit data on product characteristics, performance and limitation criteria.

C. Design Data: Indicate load carrying capacity of trapeze hangers and hangers and supports for feeders greater than 400 Amps.

D. Manufacturer's Certificate: Certify products meet or exceed specified requirements.

E. Engineering Judgements: For conditions not covered by UL or WH listed designs, submit judgements by licensed professional engineer suitable for presentation to authority having jurisdiction for acceptance as meeting code fire protection requirements.

1.7 QUALITY ASSURANCE

A. Through Penetration Firestopping of Fire Rated Assemblies: UL 1479 or ASTM E814 with 0.10 inch water gage (24.9 Pa) minimum positive pressure differential to achieve fire F-Ratings and temperature T-Ratings as indicated on Drawings, but not less than 1-hour.

1. Wall Penetrations: Fire F-Ratings as indicated on Drawings, but not less than 1-hour.

2. Floor Penetrations: Fire F-Ratings and temperature T-Ratings as indicated on Drawings, but not less than 1-hour.

a. Floor Penetrations within Wall Cavities: T-Rating is not required.

B. Through Penetration Firestopping of Non-Fire Rated Floor [and Roof] Assemblies: Materials to resist free passage of flame and products of combustion.

1. Noncombustible Penetrating Items: Noncombustible materials for penetrating items connecting maximum of three stories.

2. Penetrating Items: Materials approved by authorities having jurisdiction for penetrating items connecting maximum of two stories.

C. Coordinate with Architectural Drawings for roof penetrations.

D. Fire Resistant Joints in Fire Rated Floor, Roof, and Wall Assemblies: ASTM E1966 or UL 2079 to achieve fire resistant rating as indicated on Drawings for assembly in which joint is installed.

E. Fire Resistant Joints Between Floor Slabs and Exterior Walls: ASTM E119 with 0.10 inch water gage (24.9 Pa) minimum positive pressure differential to achieve fire resistant rating as indicated on Drawings for floor assembly.

F. Surface Burning Characteristics: 25/450 flame spread/smoke developed index when tested in accordance with ASTM E84.

G. Perform Work in accordance with AHJ’s requirements and applicable codes and standards.

1.8 QUALIFICATIONS

A. Manufacturer: Company specializing in manufacturing Products specified in this section with minimum three years experience.

B. Installer: Company specializing in performing work of this section with minimum two years documented experience.

1.9 PRE-INSTALLATION MEETINGS

A. Section 01 30 00 - Administrative Requirements: Pre-installation meeting.

B. Convene minimum one week prior to commencing work of this section.

1.10 DELIVERY, STORAGE, AND HANDLING

A. Section 01 60 00 - Product Requirements: Requirements for transporting, handling, storing, and protecting products.

B. Accept materials on site in original factory packaging, labeled with manufacturer's identification.

C. Protect from weather and construction traffic, dirt, water, chemical, and mechanical damage, by storing in original packaging.

1.11 ENVIRONMENTAL REQUIREMENTS

A. Section 01 60 00 - Product Requirements: Environmental conditions affecting products on site.

B. Do not apply firestopping materials when temperature of substrate material and ambient air is below 60 degrees F (15 degrees C).

C. Maintain this minimum temperature before, during, and for minimum 3 days after installation of firestopping materials.

D. Provide ventilation in areas to receive solvent cured materials.

PART 2 PRODUCTS

2.1 CONDUIT SUPPORTS

A. Manufacturers:

1. Allied Tube & Conduit Corp.
2. Electroline Manufacturing Company.
3. O-Z Gedney Co
4. Substitutions: Not Permitted.

B. Hanger Rods: Threaded high tensile strength galvanized carbon steel with free running threads.

C. Beam Clamps: Malleable Iron, with tapered hole in base and back to accept either bolt or hanger rod. Set screw: hardened steel.

D. Conduit clamps for trapeze hangers: Galvanized steel, notched to fit trapeze with single bolt to tighten.

E. Conduit clamps - general purpose: One hole malleable iron for surface mounted conduits.

F. Cable Ties: High strength nylon temperature rated to 185 degrees F (85 degrees C). Self locking.

2.2 FORMED STEEL CHANNEL

A. Manufacturers:

1. Allied Tube & Conduit Corp.
2. B-Line Systems.
3. Midland Ross Corporation, Electrical Products Division.
4. Unistrut Corp.
5. Substitutions: Not Permitted.

B. Product Description: Galvanized 12 gage thick steel. With holes 1-1/2 inches on center.

2.3 SLEEVES

A. Furnish materials in accordance with AHJ, codes and standards, and generally accepted industry practices.

B. Sleeves through Fire Rated and Fire Resistive Floors and Walls, and Fire Proofing: Prefabricated fire rated sleeves including seals, UL listed.

C. Fire-stopping Insulation: Glass fiber type, non-combustible.

2.4 MECHANICAL SLEEVE SEALS

A. Manufacturers:

1. Thunderline Link-Seal, Inc.
2. NMP Corporation.
3. Substitutions: Not Permitted.

B. Product Description: Modular mechanical type, consisting of interlocking synthetic rubber links shaped to continuously fill annular space between object and sleeve, connected with bolts and pressure plates causing rubber sealing elements to expand when tightened, providing watertight seal and electrical insulation.

2.5 FIRESTOPPING

A. Manufacturers:

1. Dow Corning Corp.
2. Fire Trak Corp.
3. International Protective Coating Corp.
4. 3M fire Protection Products.

5. Specified Technology, Inc.
6. Substitutions: Not Permitted.

B. Product Description: Different types of products by multiple manufacturers are acceptable as required to meet specified system description and performance requirements; provide only one type for each similar application.

1. Silicone Firestopping Elastomeric Firestopping: [Single] [Multiple] component silicone elastomeric compound and compatible silicone sealant.
2. Foam Firestopping Compounds: [Single] [Multiple] component foam compound.
3. Formulated Firestopping Compound of Incombustible Fibers: Formulated compound mixed with incombustible non-asbestos fibers.
4. Fiber Stuffing and Sealant Firestopping: Composite of [mineral] [ceramic] fiber stuffing insulation with silicone elastomer for smoke stopping.
5. Mechanical Firestopping Device with Fillers: Mechanical device with incombustible fillers and silicone elastomer, covered with sheet stainless steel jacket, joined with collars, penetration sealed with flanged stops.
6. Intumescent Firestopping: Intumescent putty compound which expands on exposure to surface heat gain.
7. Firestop Pillows: Formed mineral fiber pillows.

C. Color: As selected from manufacturer’s full range of colors.

PART 3 EXECUTION

3.1 EXAMINATION

A. Section 01 30 00 - Administrative Requirements: Verification of existing conditions before starting work.

B. Verify openings are ready to receive sleeves.

C. Verify openings are ready to receive firestopping.

3.2 PREPARATION

A. Clean substrate surfaces of dirt, dust, grease, oil, loose material, or other matter affecting bond of firestopping material.

B. Remove incompatible materials affecting bond.

C. Install materials to arrest liquid material leakage.

D. Obtain permission from Owner before using powder-actuated anchors.

E. Do not drill or cut structural members.

3.3 INSTALLATION - HANGERS AND SUPPORTS

A. Install conduit and raceway support and spacing in accordance with NEC.

B. Install hangers, anchors, sleeves, and seals as indicated, in accordance with manufacturer's written instructions and with recognized industry practices to insure supporting devices comply with requirements. Comply with requirements of NECA and NEC for installation of supporting devices.

C. Coordinate with other electrical work, including raceway and wiring work, as necessary to interface installation of supporting devices with other work.

D. Install hangers, supports and attachments to support piping properly from building structure. Arrange for grouping of parallel runs horizontal conduits to be supported together on trapeze type hangers where possible. Install supports with spacings indicated and in compliance with NEC requirements.

E. Do not fasten supports to pipes, ducts, mechanical equipment, or conduit.

F. Install multiple conduit runs on common hangers.

G. Supports:

1. Fabricate supports from structural steel or formed steel channel. Install hexagon head bolts to present neat appearance with adequate strength and rigidity. Install spring lock washers under nuts.
2. Install surface mounted cabinets and panelboards with minimum of four anchors.
3. In wet and damp locations install steel channel supports to stand cabinets and panelboards 1 inch off wall.
4. Support vertical conduit at every floor.

3.4 INSTALLATION - FIRESTOPPING

A. Install material at fire rated construction perimeters and openings containing penetrating sleeves, piping, ductwork, conduit and other items, requiring firestopping.

B. Apply primer where recommended by manufacturer for type of firestopping material and substrate involved, and as required for compliance with required fire ratings.

C. Apply firestopping material in sufficient thickness to achieve required fire and smoke rating.

D. Compress fibered material to maximum 40 percent of its uncompressed size.

E. Remove dam material after firestopping material has cured.

F. Fire Rated Surface:

1. Seal opening at floor, wall, partition, ceiling, and roof as follows:

a. Install sleeve through opening and extending beyond minimum of 1 inch on both sides of building element.

b. Size sleeve allowing minimum of 1 inch void between sleeve and building element.

c. Pack void with backing material.

d. Seal ends of sleeve with UL listed fire resistive silicone compound to meet fire rating of structure penetrated.

2. Where conduit penetrates fire rated surface, install firestopping product in accordance with manufacturer's instructions.

G. Non-Rated Surfaces:

1. Seal opening through non-fire rated wall, partition, floor, ceiling, and roof opening as follows:

a. Install sleeve through opening and extending beyond minimum of 1 inch on both sides of building element.

b. Size sleeve allowing minimum of 1 inch void between sleeve and building element.

c. Install type of firestopping material recommended by manufacturer.

2. Install escutcheons, floor plates or ceiling plates where conduit, penetrates non-fire rated surfaces in occupied spaces. Occupied spaces include rooms with finished ceilings and where penetration occurs below finished ceiling.

3. Exterior wall openings below grade: Assemble rubber links of mechanical seal to size of conduit and tighten in place, in accordance with manufacturer's instructions.

4. Interior partitions: Seal pipe penetrations at telecommunication rooms. Apply sealant to both sides of penetration to completely fill annular space between sleeve and conduit.

3.5 INSTALLATION - EQUIPMENT BASES AND SUPPORTS

A. Provide housekeeping pads of concrete, minimum 3-1/2 inches thick and extending 6 inches beyond supported equipment. Refer to Section 03 30 00.

B. Using templates furnished with equipment, install anchor bolts, and accessories for mounting and anchoring equipment.

C. Construct supports of steel members or formed steel channel. Brace and fasten with flanges bolted to structure.

3.6 INSTALLATION - SLEEVES

A. Exterior watertight entries: Seal with adjustable interlocking rubber links.

B. Conduit penetrations not required to be watertight: Sleeve and fill with silicon foam.

C. Set sleeves in position in forms. Provide reinforcing around sleeves.

D. Size sleeves large enough to allow for movement due to expansion and contraction. Provide for continuous insulation wrapping.

E. Extend sleeves through floors 1 inch above finished floor level. Caulk sleeves.

F. Where conduit or raceway penetrates floor, ceiling, or wall, close off space between conduit or raceway and adjacent work with stuffing, fire stopping insulation and caulk airtight. Provide close fitting metal collar or escutcheon covers at both sides of penetration.

G. Install stainless steel escutcheons at finished surfaces.

3.7 FIELD QUALITY CONTROL

A. Section [01 40 00 - Quality Requirements] [01 70 00 - Execution and Closeout Requirements]: Field inspecting, testing, adjusting, and balancing.

B. Inspect installed firestopping for compliance with specifications and submitted schedule.

3.8 CLEANING

A. Section 01 70 00 - Execution and Closeout Requirements: Requirements for cleaning.

B. Clean adjacent surfaces of firestopping materials.

3.9 PROTECTION OF FINISHED WORK

A. Section 01 70 00 - Execution and Closeout Requirements: Requirements for protecting finished Work.

B. Protect adjacent surfaces from damage by material installation.

END OF SECTION

SECTION 26 05 33 - RACEWAY AND BOXES FOR ELECTRICAL SYSTEMS

PART 1 GENERAL

1.1 SUMMARY

A. Section includes conduit and tubing, surface raceways, wireways, outlet boxes, pull and junction boxes, and handholes.

B. Related Sections:

1. Section 26 05 03 - Equipment Wiring Connections.
2. Section 26 05 26 - Grounding and Bonding for Electrical Systems.
3. Section 26 05 29 - Hangers and Supports for Electrical Systems.
4. Section 26 05 34 - Floor Boxes for Electrical Systems.
5. Section 26 05 36 - Cable Trays for Electrical Systems.
6. Section 26 05 39 - Underfloor Raceways for Electrical Systems.
7. Section 26 05 53 - Identification for Electrical Systems.
8. Section 26 27 16 - Electrical Cabinets and Enclosures.
9. Section 26 27 23 - Indoor Service Poles.
10. Section 26 27 26 - Wiring Devices.
11. Section 27 05 33 - Conduits and Backboxes for Communications Systems.
12. Section 27 05 36 - Cable Trays for Communications Systems.
13. Section 28 05 33 - Conduits and Backboxes for Electronic Safety and Security.
14. Section 28 05 36 - Cable Trays for Electronic Safety and Security.
15. Section 33 71 19 - Electrical Underground Ducts and Manholes.

1.2 REFERENCES

A. American National Standards Institute:

1. ANSI C80.1 - Rigid Steel Conduit, Zinc Coated.
2. ANSI C80.3 - Specification for Electrical Metallic Tubing, Zinc Coated.
3. ANSI C80.5 - Aluminum Rigid Conduit - (ARC).

B. National Electrical Manufacturers Association:

1. NEMA 250 - Enclosures for Electrical Equipment (1000 Volts Maximum).
2. NEMA FB 1 - Fittings, Cast Metal Boxes, and Conduit Bodies for Conduit and Cable Assemblies.
3. NEMA OS 1 - Sheet Steel Outlet Boxes, Device Boxes, Covers, and Box Supports.

4. NEMA OS 2 - Nonmetallic Outlet Boxes, Device Boxes, Covers, and Box Supports.
5. NEMA RN 1 - Polyvinyl Chloride (PVC) Externally Coated Galvanized Rigid Steel Conduit and Intermediate Metal Conduit.
6. NEMA TC 2 - Electrical Polyvinyl Chloride (PVC) Tubing and Conduit.
7. NEMA TC 3 - PVC Fittings for Use with Rigid PVC Conduit and Tubing.

C. National Fire Protection Association (NFPA):

1. 70 – National Electrical Code (NEC)

D. Underwriters Laboratories, Inc. (UL):

1. 1-93 – Flexible Metal Conduit
2. 5-96 – Surface Metal Raceway and Fittings
3. 6-97 – Rigid Metal Conduit
4. 50-95 – Enclosures for Electrical Equipment
5. 467-93 – Grounding and Bonding Equipment
6. 514A-96 – Metallic Outlet Boxes
7. 514B-97 – Fittings for Cable and Conduit
8. 651-95 – Schedule 40 and 80 Rigid PVC Conduit
9. 651A-95 – Type EB and A Rigid PVC Conduit and HDPE Conduit
10. 797-93 – Electrical Metallic Tubing

1.3 SYSTEM DESCRIPTION

A. Raceway and boxes located as indicated on Drawings, and at other locations required for splices, taps, wire pulling, equipment connections, and compliance with regulatory requirements. Raceway and boxes are shown in approximate locations unless dimensioned. Provide raceway to complete wiring system.

B. Underground More than 5 feet outside Foundation Wall: Provide schedule 40 PVC conduit. Provide cast metal boxes or nonmetallic handholes.

C. Underground Within 5 feet from Foundation Wall: Provide either plastic coated RMC conduit or schedule 40 PVC. Rigid conduit shall be used when stubbing up above grade. Provide cast metal or nonmetallic boxes.

D. Outdoor Locations, Above Grade: Provide rigid steel or electrical metallic tubing (above 6’ A.F.F.). Provide cast metal or nonmetallic outlet, pull, and junction boxes.

E. In Slab Above Grade: Provide rigid steel conduit or thickwall nonmetallic conduit. Provide cast boxes.

F. Concealed Dry Locations: Provide electrical metallic tubing. Provide sheet-metal boxes. Provide flush mounting outlet boxes in finished areas. Provide hinged enclosure for large pull boxes.

G. Exposed Dry Locations: Provide rigid steel or electrical metallic tubing (EMT above 6’ A.F.F.). Provide sheet-metal boxes. Provide flush mounting outlet box in finished areas. Provide hinged enclosure for large pull boxes.

1.4 DESIGN REQUIREMENTS

A. Minimum Raceway Size: 1/2 inch unless otherwise specified.

1.5 SUBMITTALS

A. Section 01 33 00 - Submittal Procedures: Submittal procedures.

B. Product Data: Submit for the following:

1. All types of conduit planned for the project.
2. Handholes, and NEMA 3R pullboxes.

C. Manufacturer's Installation Instructions: Submit application conditions and limitations of use stipulated by Product testing agency specified under Regulatory Requirements. Include instructions for storage, handling, protection, examination, preparation, and installation of Product.

1.6 CLOSEOUT SUBMITTALS

A. Section 01 70 00 - Execution and Closeout Requirements: Closeout procedures.

B. Project Record Documents:

1. Record actual routing of conduits larger than 2 inch.
2. Record actual locations and mounting heights of outlet, pull, and junction boxes.

1.7 DELIVERY, STORAGE, AND HANDLING

A. Section 01 60 00 - Product Requirements: Product storage and handling requirements.

B. Protect conduit from corrosion and entrance of debris by storing above grade. Provide appropriate covering.

C. Protect PVC conduit from sunlight.

1.8 COORDINATION

A. Section 01 30 00 - Administrative Requirements: Coordination and project conditions.

B. Coordinate installation of outlet boxes for equipment connected under Section 26 05 03.

C. Coordinate mounting heights, orientation and locations of outlets mounted above counters, benches, and backsplashes.

PART 2 PRODUCTS

2.1 MATERIAL

A. General: Provide metal conduit, tubing and fittings of types, grades, sizes and weights (wall thickness) for each service indicated.

B. Where types and grades are not indicated, provide proper selection determined by installer to fulfill wiring requirements and comply with applicable portions of NEC for raceways.

C. Conduit Size: In accordance with the NEC, but not less than 1/2 inch unless otherwise shown. Where permitted by the NEC, 1/2inch flexible conduit may be used for tap connections to recessed lighting fixtures.

D. Conduit:

1. Rigid steel (RMC): UL 6, hot dipped galvanized, threaded type.
2. Electrical metallic tubing (EMT): U.L. 797. Maximum size 5 inch. Permitted only with cable rated 600 volts or less.
3. Flexible steel conduit (commercial Greenfield): UL 1, formed from continuous length of spirally-wound, interlocked, zinc-coated strip steel. Permitted only with cable rated 600 volts or less.
4. Liquid-tight flexible metal conduit: Flexible galvanized steel tubing covered with extruded liquid-tight jacket of polyvinyl chloride (PVC). Provide conduit with a continuous copper bonding conductor wound spirally between convolutions. Permitted only with cable rated 600 volts or less.
5. Underground PVC plastic conduit: UL 651 and UL 651A, heavy wall PVC or high density PE. Heavy Wall Conduit: C, UL-rated, constructed of Schedule 40, polyvinyl chloride. For direct burial, UL listed and in conformity with NEC Article 347.
6. Surface metal raceway: UL 5. Permitted only with cable rated 600 volts or less.

E. Conduit Fittings:

1. Rigid steel conduit fittings:
   a. Standard threaded couplings, locknuts, bushings, and elbows: Only steel or malleable iron materials are acceptable.
   b. Locknuts: Bonding type with sharp edges for digging into the metal wall of an enclosure.
   c. Bushings: Metallic insulation type, consisting of an insulating insert molded or locked into the metallic body of the fitting. Bushings made entirely of metal or nonmetallic material are not permitted.
   d. Erickson (union-type) and set screw type couplings: Approved for use to complete a conduit run where conduit is installed in concrete. Use set screws of case hardened steel with hex head and cup point to firmly seat in conduit wall for positive ground. Tightening of set screws with pliers is prohibited.

e. Sealing fittings: Threaded cast iron type. Use continuous drain type sealing fitting to prevent passage of water vapor. In concealed work, install fittings in flush steel boxes with blank coverplates having the same finishes as that of other electrical plates in the room.

2. Electrical metallic tubing fittings:

a. Only steel or malleable iron material are acceptable.

b. Couplings and connectors: Concrete tight and rain tight, with connectors having insulated throats. Use gland and ring compression type couplings and connectors for conduit sizes over 2 inches. If set screw type is used, then set screw or compression types are permitted for conduits less than 2 inches. Use set screws of case-hardened steel with hex head and cup point to firmly seat in wall of conduit for positive grounding.

c. Indent type connectors of couplings prohibited.

d. Die-cast or pressure-cast zinc-alloy fittings or fittings made of “pot metal” are prohibited.

3. Flexible steel conduit (greenfield) fittings:

a. UL 5. Only steel or malleable iron materials are acceptable.

b. Straight Terminal Connectors: One piece body. Female end with clamp and deep slotted machine screw for securing conduit and male threaded end provided with locknut.

c. 45° or 90° Terminal Angle Connectors: Two-piece body construction with removable upper section, female end with clamp and deep slotted machine screw for securing conduit and male threaded end provided with locknut.

4. Liquid-tight flexible metal conduit fittings:

a. Only steel or malleable iron materials are acceptable.

b. Fittings must incorporate a threaded grounding cone, a steel or plastic compression ring, and a gland for tightening. Connectors shall have insulated throats.

5. Underground PVC plastic conduit fittings: As recommended by the conduit manufacturer. Make solvent cemented joints in accordance with recommendations of manufacturer.

6. Surface metal raceway fittings: As recommended by the raceway manufacturer.

7. Expansion and deflection couplings:

a. UL 467 and UL 514B.

b. Accommodate, 0.75 inch deflection, expansion, or contraction in any direction, and allow 30 degree angular deflections.

c. Include internal flexible metal braid sized to guarantee conduit ground continuity and fault currents in accordance with UL 467, and the NEC code tables for ground conductors.

d. Jacket: Flexible, corrosion-resistant, watertight, moisture and heat resistant molded rubber material with stainless steel jacket clamps.

F. Conduit Supports:

1. Parts and hardware: Zinc-coat or provide equivalent corrosion protection.

2. Individual Conduit Hangers: Designed for the purpose, having a pre-assembled closure bolt and nut, and provisions for receiving a hanger rod.
3. Multiple conduit (trapeze) hangers: Not less than 1-1/2 by 1-1/2 inch, 12 gage steel, cold formed, lipped channels; with not less than 3/8 inch diameter steel hanger rods.
4. Solid Masonry and Concrete Anchors: Self-drilling expansion shields, or machine bolt expansion.

G. Outlet, Junction, and Pull Boxes:
1. UL-50 and UL-514A.
2. Cast metal where required by the NEC and equipped with waterproof, rustproof covers.
3. Sheet metal boxes: Galvanized steel, except where otherwise shown.

H. Wireways: Equip with hinged covers, except where removable covers are shown.

I. Warning Tape: Standard, 4-Mil polyethylene 76 mm (3 inch) wide tape detectable type, red with black letters, and imprinted with “CAUTION BURIED ELECTRIC LINE BELOW”.

2.2 OUTLET BOXES

A. Manufacturers:
1. Carlon Electrical Products.
2. Hubbell Wiring Devices.
3. Thomas & Betts Corp.
4. Walker Systems Inc.
5. The Wiremold Co.
6. Substitutions: Not Permitted.

B. Sheet Metal Outlet Boxes: NEMA OS 1, galvanized steel.
1. Luminaire and Equipment Supporting Boxes: Rated for weight of equipment supported; furnish 1/2 inch male fixture studs where required.
2. Concrete Ceiling Boxes: Concrete type.

C. Nonmetallic Outlet Boxes: NEMA OS 2.

D. Cast Boxes: NEMA FB 1, Type FD, cast feralloy. Furnish gasketed cover by box manufacturer. Furnish threaded hubs.

E. Wall Plates for Finished Areas: As specified in Section 26 27 26.

F. Wall Plates for Unfinished Areas: Furnish gasketed cover.

2.3 PULL AND JUNCTION BOXES

A. Manufacturers:

1. Carlon Electrical Products.
2. Hubbell Wiring Devices.
3. Thomas & Betts Corp.
4. Walker Systems Inc.
5. The Wiremold Co.
6. Substitutions: Not Permitted.

B. Sheet Metal Boxes: NEMA OS 1, galvanized steel.

C. Surface Mounted Cast Metal Box: NEMA 250, Type [4] [4X] [6]; flat-flanged, surface mounted junction box:

1. Material: Galvanized cast iron.
2. Cover: Furnish with ground flange, neoprene gasket, and stainless steel cover screws.

D. In-Ground Cast Metal Box: NEMA 250, Type 6, flanged, recessed cover box for flush mounting:

1. Material: Galvanized cast iron.
2. Cover: Nonskid cover with neoprene gasket and stainless steel cover screws.
3. Cover Legend: "ELECTRIC" or “TELECOM” as needed.
4. Size as required. Minimum size is 18”x18”x18”.
5. Minimum 10,000 lb. rated.

PART 3 EXECUTION

3.1 EXAMINATION

A. Section 01 30 00 - Administrative Requirements: Coordination and project conditions.

B. Verify outlet locations and routing and termination locations of raceway prior to rough-in.

3.2 EXISTING WORK

A. Remove exposed abandoned raceway, including abandoned raceway above accessible ceiling finishes. Cut raceway flush with walls and floors, and patch surfaces.

B. Remove concealed abandoned raceway to its source.

C. Disconnect abandoned outlets and remove devices. Remove abandoned outlets when raceway is abandoned and removed. Install blank cover for abandoned outlets not removed.

D. Maintain access to existing boxes and other installations remaining active and requiring access. Modify installation or provide access panel.

E. Extend existing raceway and box installations using materials and methods as specified.

F. Clean and repair existing raceway and boxes to remain or to be reinstalled.

3.3 INSTALLATION

A. Ground and bond raceway and boxes in accordance with Section 26 05 26.

B. Fasten raceway and box supports to structure and finishes in accordance with Section 26 05 29.

C. Identify raceway and boxes in accordance with Section 26 05 53.

D. Arrange raceway and boxes to maintain headroom and present neat appearance.

3.4 INSTALLATION - RACEWAY

A. Raceway routing is shown in approximate locations unless dimensioned. Route to complete wiring system.

B. Arrange raceway supports to prevent misalignment during wiring installation.

C. Support raceway using coated steel or malleable iron straps, lay-in adjustable hangers, clevis hangers, and split hangers.

D. Group related raceway; support using conduit rack. Construct rack using steel channel specified in Section 26 05 29.

E. Do not support raceway with wire or perforated pipe straps. Remove wire used for temporary supports

F. Do not attach raceway to ceiling support wires or other piping systems.

G. Construct wireway supports from steel channel specified in Section 26 05 29.

H. Route exposed raceway parallel and perpendicular to walls.

I. Route raceway installed above accessible ceilings parallel and perpendicular to walls.

J. Route conduit in and under slab from point-to-point.

K. Maximum Size Conduit in Slab Above Grade: ¾ inch. Do not cross conduits in slab larger than 1/2 inch (DN 13).

L. Maintain clearance between raceway and piping for maintenance purposes.

M. Maintain 12 inch clearance between raceway and surfaces with temperatures exceeding 104 degrees F (40 degrees C).

N. Cut conduit square using saw or pipe cutter; de-burr cut ends.

O. Bring conduit to shoulder of fittings; fasten securely.

P. Join nonmetallic conduit using cement as recommended by manufacturer. Wipe nonmetallic conduit dry and clean before joining. Apply full even coat of cement to entire area inserted in fitting. Allow joint to cure for minimum 20 minutes.

Q. Install conduit hubs to fasten conduit to sheet metal boxes in damp and wet locations and to cast boxes.

R. Install no more than equivalent of three 90 degree bends between boxes. Install conduit bodies to make sharp changes in direction, as around beams. Install factory elbows for bends in metal conduit larger than 2 inch size.

S. Avoid moisture traps; install junction box with drain fitting at low points in conduit system.

T. Install fittings to accommodate expansion and deflection where raceway crosses control and expansion joints.

U. Install suitable pull string or cord in each empty raceway except sleeves and nipples.

V. Install suitable caps to protect installed conduit against entrance of dirt and moisture.

W. Surface Raceway: Install flat-head screws, clips, and straps to fasten raceway channel to surfaces; mount plumb and level. Install insulating bushings and inserts at connections to outlets and corner fittings.

X. Close ends and unused openings in wireway.

3.5 INSTALLATION - BOXES

A. Install wall mounted boxes at elevations to accommodate mounting heights as indicated on Drawings.

B. Adjust box location up to 1 foot prior to rough-in to accommodate intended purpose.

C. Orient boxes to accommodate wiring devices oriented as specified in Section 26 27 26.

D. Install pull boxes and junction boxes above accessible ceilings and in unfinished areas only.

E. In Accessible Ceiling Areas: Install outlet and junction boxes no more than 6 inches from ceiling access panel or from removable recessed luminaire.

F. Locate flush mounting box in masonry wall to require cutting of masonry unit corner only. Coordinate masonry cutting to achieve neat opening.

G. Do not install flush mounting box back-to-back in walls; install with minimum 6 inches separation. Install with minimum 24 inches separation in acoustic rated walls.

H. Secure flush mounting box to interior wall and partition studs. Accurately position to allow for surface finish thickness.

I. Install stamped steel bridges to fasten flush mounting outlet box between studs.

J. Install flush mounting box without damaging wall insulation or reducing its effectiveness.

K. Install adjustable steel channel fasteners for hung ceiling outlet box.

L. Do not fasten boxes to ceiling support wires or other piping systems.

M. Support boxes independently of conduit.

N. Install gang box where more than one device is mounted together. Do not use sectional box.

O. Install gang box with plaster ring for single device outlets.

3.6 INTERFACE WITH OTHER PRODUCTS

A. Install conduit to preserve fire resistance rating of partitions and other elements, using materials and methods.

B. Route conduit through roof openings for piping and ductwork or through suitable roof jack with pitch pocket. Coordinate requirements, sealing, and locations with architect prior to work.

C. Locate outlet boxes to allow luminaires positioned as indicated on Drawings.

D. Align adjacent wall mounted outlet boxes for switches, thermostats, and similar devices.

3.7 ADJUSTING

A. Section 01 70 00 - Execution and Closeout Requirements Testing, adjusting, and balancing.

B. Adjust flush-mounting outlets to make front flush with finished wall material.

C. Install knockout closures in unused openings in boxes.

3.8 CLEANING

A. Section 01 70 00 - Execution and Closeout Requirements: Final cleaning.

B. Clean interior of boxes to remove dust, debris, and other material.

C. Clean exposed surfaces and restore finish.

END OF SECTION

SECTION 26 05 34 - EQUIPMENT WIRING CONNECTIONS

PART 1 GENERAL

1.1 SUMMARY

A. Section includes electrical connections to equipment.

B. Related Sections:

1. Section 26 05 19 - Low-Voltage Electrical Power Conductors and Cables (600 volts and below).

2. Section 26 05 33 - Raceway and Boxes for Electrical Systems.

C. Related Documents:

1. Drawings and general provisions of Contract, including General and Supplementary Conditions and Division 1 Specification sections, apply to work of this Section.

2. This Section is a Division 26 Basic Electrical Materials and Methods section, and is part of each Division 23 and Division 26 section making reference to electrical connections for equipment specified herein.

1.2 REFERENCES

Latest Adopted Editions of:

A. National Electrical Manufacturers Association:

1. NEMA WD 1 - General Requirements for Wiring Devices.

2. NEMA WD 6 - Wiring Devices-Dimensional Requirements.

B. NEC Compliance: Comply with applicable requirements of NEC as to type products used and installation of electrical power connections (terminals and splices) for junction boxes, motor starters, and disconnect switches.

C. UL Compliance: Comply with UL Std 486A, “Wire Connectors and Soldering Lugs for Use with Copper Conductors” including, but not limited to, tightening of electrical connectors to torque values indicated. Provide electrical connection products and materials which are UL listed and labeled.

1.3 SUBMITTALS

A. Section 01 33 23 - Submittal Procedures: Submittal procedures.

B. Product Data: Submit wiring device manufacturer’s catalog information showing dimensions, configurations, and construction.

C. Manufacturer's installation instructions.

D. Adjusted circuit breaker trip and time delay settings to values as indicated on Drawings.

E. Project Record Documents: Record actual locations, sizes, and configurations of equipment connections.

1.4 COORDINATION

A. Section 01 00 00 – General Requirements: Coordination and project conditions.

B. Obtain and review shop drawings, product data, manufacturer’s wiring diagrams, and manufacturer's instructions for equipment furnished under other sections.

C. Determine connection locations and requirements.

D. Sequence rough-in of electrical connections to coordinate with installation of equipment.

E. Sequence electrical connections to coordinate with start-up of equipment.

PART 2 PRODUCTS

2.1 MATERIALS AND COMPONENTS

A. General: For each electrical connection indicated, provide complete assembly of materials; including, but not necessarily limited to, pressure connectors, terminals (lugs), electrical insulating tape, cable ties, solderless wirenuts, and other items and accessories as needed to complete splices and terminations of types indicated.

B. Wire, Cables, and Connectors:
General: Provide wires, cables, and connectors complying with Division 26.

C. Connectors and Terminals: Provide electrical connectors and terminals that mate and match (including sizes and ratings) with equipment terminals, and are recommended by equipment manufacturer for intended applications.

D. Manufacturers:

1. Pass & Seymour.

2. Hubbell.

3. Cooper.

4. Substitutions: Not Permitted.

E. Attachment Plug Construction: Conform to NEMA WD 1.

F. Configuration: NEMA WD 6; match receptacle configuration at outlet furnished for equipment.

G. Cord Construction: Type SO multiconductor flexible cord with identified equipment grounding conductor, suitable for use in damp locations. Only allowed where shown on drawings.

H. Size: Suitable for connected load of equipment, length of cord, and rating of branch circuit overcurrent protection.

PART 3 PART 3 - EXECUTION

3.1 3.1 EXAMINATION

A. A. Section 01 00 00 - General Requirements: Coordination and project conditions.

B. B. Verify equipment is ready for electrical connection, for wiring, and to be energized.

3.2 3.2 INSTALLATION

A. Install electrical connections as indicated; in accordance with equipment manufacturer's written instructions, with recognized industry practices, and complying with applicable requirements of UL and NEC to ensure that products fulfill requirements.

B. Coordinate with other work, including wires/cables, raceway, and equipment installation as necessary to properly interface installation of electrical connections for equipment with other work.

C. Connect electrical power supply conductors to equipment conductors in accordance with equipment manufacturer's written instructions and wiring diagrams. Mate and match conductors of electrical connections for proper interface between electrical power supplies and installed equipment.

D. Make electrical connections.

E. Make conduit connections to equipment using flexible conduit. Use liquidtight flexible conduit with watertight connectors in exterior, damp, wet, corrosive, oil and grease locations.

F. Connect heat producing equipment using wire and cable with insulation suitable for temperatures encountered.

G. Install receptacle outlet to accommodate connection with attachment plug.

H. Install cord and cap for field-supplied attachment plug.

I. Install suitable strain-relief clamps and fittings for cord connections at outlet boxes and equipment connection boxes.

J. Install disconnect switches, controllers, control stations, and control devices to complete equipment wiring requirements.

K. Install terminal block jumpers to complete equipment wiring requirements.

L. Install interconnecting conduit and wiring between devices and equipment to complete equipment wiring requirements.

3.3 ADJUSTING

A. Cooperate with utilization equipment installers and field service personnel during checkout and starting of equipment to allow testing and balancing and other startup operations. Provide personnel to operate electrical system and checkout wiring connection components and configurations.

B. Field Quality Control: Upon completion of installation of electrical connections, and after circuitry has been energized with rated power source, test connections to demonstrate capability and compliance with requirements. Ensure that direction of rotation of each motor fulfills requirement. Correct malfunctioning units at site, then retest to demonstrate compliance.

End of Section

SECTION 26 05 53 - IDENTIFICATION FOR ELECTRICAL SYSTEMS

PART 1 GENERAL

1.1 SUMMARY

A. Section Includes:

1. Nameplates.
2. Labels.
3. Wire markers.
4. Conduit markers.
5. Stencils.
6. Underground Warning Tape.
7. Lockout Devices.

B. Related Sections:

1. Section 09 90 00 - Painting and Coating: Execution requirements for painting specified by this section.
2. Section 27 05 53 - Identification for Communications Systems.
3. Section 28 05 53 - Identification for Electronic Safety and Security.

1.2 SUBMITTALS

A. Section 01 33 00 - Submittal Procedures: Submittal procedures.

B. Manufacturer's Installation Instructions: Indicate installation instructions, special procedures, and installation.

1.3 CLOSEOUT SUBMITTALS

A. Section 01 70 00 - Execution and Closeout Requirements: Requirements for submittals.

B. Project Record Documents: Record actual locations of tagged devices; include tag numbers.

PART 2 PRODUCTS

2.1 NAMEPLATES

A. Engraved Plastic-Laminate Signs:

1. General: Provide engraving stock melamine plastic laminate in sizes and thicknesses indicated, engraved with engraver’s standard letter style of sizes and wording indicating; punched for mechanical fastening.
2. Signs shall be colored face with white core plies (letter color).

a. Thickness: 1/16”, except as otherwise indicated.

b. Fasteners: Self-tapping stainless steel screws, except contact-type permanent adhesive where screws cannot, or should not, penetrate substrate.

c. Nameplate colors shall be:

1. Black – Normal, utility power, less than 600 Volts

2. Red – Fire alarm system.

3. Blue – UPS power.

2.2 LABELS

A. Dymo-Labels: Identify all receptacles and wall switches (new and existing) with panelboard and branch circuit number. Attach to coverplate.

2.3 CONDUIT AND RACEWAY MARKERS

A. Description: Nameplate fastened with straps or Stencils.

B. Color:

1. 480 Volt System: Black lettering on white background.

2. 208 Volt System: Black lettering on white background.

2.4 UNDERGROUND WARNING TAPE

A. Description: 4 inch wide plastic tape, detectable type, colored red with suitable warning legend describing buried electrical lines.

PART 3 EXECUTION

3.1 PREPARATION

A. Degrease and clean surfaces to receive adhesive for identification materials.

B. Prepare surfaces in accordance with Section 09 90 00 for stencil painting.

C. Coordinate names, abbreviations, and other designations used in electrical identification work with corresponding designations shown, specified, or scheduled. Provide numbers, lettering and wording as indicated, or if not otherwise indicated, as recommended by manufacturer or as required for proper identification and operation/maintenance of electrical systems and equipment.

3.2 EXISTING WORK

A. Install identification on existing equipment to remain in accordance with this section.

B. Install identification on unmarked existing equipment.

C. Replace lost nameplates.

D. Re-stencil existing equipment.

3.3 INSTALLATION

A. Install identifying devices after completion of painting.

B. Nameplate Installation:

1. Install nameplate parallel to equipment lines.
2. Install nameplate for each electrical distribution and control equipment enclosure with corrosive-resistant mechanical fasteners, or adhesive.
3. Install nameplates for each control panel and major control components located outside panel with corrosive-resistant mechanical fasteners, or adhesive.
4. Secure nameplate to equipment front using screws, rivets, or adhesive.
5. Secure nameplate to inside surface of door on recessed panelboard in finished locations.
6. Install nameplates on the following:
   a. Switchgear/Switchboards.
   b. Panelboards.
   c. Transformers.
   d. Disconnect Switches.
   e. Motor Starters.
   f. Fire Alarm Equipment Panels.

C. Label Installation:

1. Install label parallel to equipment lines.

D. Wire Marker Installation:

1. Install wire marker for each conductor at panelboard gutters, pull boxes, outlet and junction boxes, and each load connection.
2. Mark data cabling at each end. Install additional marking at accessible locations along the cable run.
3. Install labels at data outlets identifying patch panel and port designation.

E. Stencil Installation:

1. Apply stencil painting in accordance with Section 09 90 00.

F. Underground Warning Tape Installation:

1. Install underground warning tape along length of each underground conduit, raceway, or cable 6 to 8 inches below finished grade, directly above buried conduit, raceway, or cable.

END OF SECTION

SECTION 26 22 00 - LOW-VOLTAGE TRANSFORMERS

PART 1 GENERAL

1.1 SUMMARY

A. Section includes two-winding transformers; shielded transformers; autotransformers; and buck-and-boost transformers.

B. Related Sections:

1. Section 26 05 26 – Grounding and Bonding.

1.2 REFERENCES

A. National Electrical Manufacturers Association:

1. NEMA ST 1 - Specialty Transformers (Except General Purpose Type).
2. NEMA ST 20 - Dry Type Transformers for General Applications.

B. International Electrical Testing Association:

1. NETA ATS - Acceptance Testing Specifications for Electrical Power Distribution Equipment and Systems.

C. National Fire Protection Association:

1. National Electrical Code (NEC).

1.3 SUBMITTALS

A. Section 01 33 00 - Submittal Procedures: Submittal procedures.

B. Product Data: Submit and outline and support point dimensions of enclosures and accessories if mounted above floor, unit weight, voltage, kVA, and impedance ratings and characteristics, tap configurations, insulation system type, and rated temperature rise.

C. Test Reports: Indicate loss data, efficiency at 25, 50, 75 and 100 percent rated load, and sound level.

D. Complete nameplate data including manufacturer’s name and catalog number.

1.4 CLOSEOUT SUBMITTALS

A. Section 01 70 00 - Execution and Closeout Requirements: Closeout procedures.

B. Project Record Documents: Record actual locations of transformers.

1.5 QUALIFICATIONS

A. Manufacturers:

1. Square D.
2. Cutler-Hammer
3. G.E.
4. Siemens.

B. Substitutions: Not Permitted.

1.6 DELIVERY, STORAGE, AND HANDLING

A. Section 01 60 00 - Product Requirements: Product storage and handling requirements.

B. Store in clean, dry space. Maintain factory wrapping or provide additional canvas or plastic cover to protect units from dirt, water, construction debris, and traffic.

C. Handle in accordance with manufacturer's written instructions. Lift only with lugs provided. Handle carefully to avoid damage to transformer internal components, enclosure, and finish.

PART 2 PRODUCTS

2.1 GENERAL PURPOSE DRY TYPE TWO-WINDING TRANSFORMERS

A. Transformers shall be UL listed or labeled.

B. Product Description: TP-1 rated, NEMA ST 20, factory-assembled, air-cooled, dry type transformers.

C. Primary and secondary voltages as shown on drawings. Delta-Wye grounded configuration unless shown otherwise.

D. Case temperature: Do not exceed 35 degrees C rise above ambient at warmest point at full load.

E. Sound Levels: Maximum sound levels are as follows:

1. 1-9 kVA: 40 dB.
2. 10-50 kVA: 45 dB.
3. 51-150 kVA: 50 dB.
4. 151-300 kVA: 55 dB.
5. 301-500 kVA: 60 dB.

F. Enclosure: NEMA ST 20, Type 1. Furnish lifting eyes or brackets.

G. Isolate core and coil from enclosure using vibration-absorbing mounts.

H. Nameplate: Include transformer connection data.

I. Dry type transformers shall have the following features:

1. Self-cooled by natural convection, isolating windings, indoor, dry type. Autotransformers will not be accepted.
2. Rating and winding connections shall be as shown on the drawings.
3. Transformers shall have copper windings.
4. Ratings shown on the drawings are for continuous-duty without the use of cooling fans.
5. Insulation systems:
   a. Transformers 30 KVA and larger: UL rated 220 degrees C system having an average maximum rise by resistance of 150 degrees C in a maximum ambient of 40 degrees C.
   b. Transformers below 30 KVA: Same as for 30 KVA and larger or UL rated 185 degrees C system having an average maximum rise by resistance of 115 degrees C in a maximum ambient of 40 degrees C.
6. Core and coil assemblies:
   a. Rigidly braced to withstand the stresses caused by short circuit currents and rough handling during shipment.
   b. Cores shall be grain oriented, non-aging, and silicon steel.
   c. Coils shall be continuous windings without splices except for taps.
   d. Coil loss and core loss shall be minimum for efficient operation.
   e. Primary and secondary tap connections shall be brazed or pressure type.
   f. Coil windings shall have end fillers or tie downs for maximum strength.
7. Nominal impedance shall be as shown on the drawings. If not shown on drawings, nominal impedance shall be as permitted by NEMA.
8. Single phase transformers rated 15 KVA through 25 KVA shall have two, 5 percent full capacity taps below normal rated primary voltage. All transformers rated 30 KVA and larger shall have two, 2 ½ percent full capacity taps above, and four, 2 ½ percent full capacity taps below normal rated primary voltage.
9. Core assemblies shall be grounded to their enclosures by adequate flexible ground straps.
10. Enclosures:
    a. Not less than code gage steel.
    b. Outdoor enclosures shall be NEMA 3R.

c. Temperature rise at hottest spot shall conform to NEMA Standards, and shall not bake and peel off the enclosure paint after the transformer has been placed in service.

d. Ventilation openings shall prevent accidental access to live components.

e. Thoroughly clean and paint enclosure at the factory with manufacturer's prime coat and standard finish.

11. Standard NEMA features and accessories including ground pad, lifting provisions and nameplate with the wiring diagrams and sound level indicated on it.

12. Dimensions and configurations shall conform to the spaces designated for their installations.

13. Transformers shall meet the minimum energy efficiency values per NEMA TP1 as listed below:

KVA Rating	Output efficiency (%)
15	97
30	97.5
45	97.7
75	98
112.5	98.2
150	98.3
225	98.5
300	98.6
500	98.7
750	98.8

2.2 SOURCE QUALITY CONTROL

A. Production test each unit according to NEMA ST20.

PART 3 EXECUTION

3.1 EXAMINATION

A. Section 01 30 00 - Administrative Requirements: Coordination and project conditions.

B. Verify mounting supports are properly sized and located including concealed bracing in walls.

3.2 EXISTING WORK

3.3 INSTALLATION

A. Set transformer plumb and level.

B. Use flexible conduit, in accordance with Section 26 05 33, 2 feet minimum length, for connections to transformer case. Make conduit connections to side panel of enclosure.

C. Support transformers in accordance with Section 26 05 29.

1. Mount wall-mounted transformers using integral flanges or accessory brackets furnished by manufacturer. Coordinate exact requirements with architect and structural engineer.

2. Mount floor-mounted transformers on vibration isolating pads suitable for isolating transformer noise from building structure.

3. Mount trapeze-mounted transformers as indicated on Drawings. Coordinate exact requirements with architect and structural engineer.

4. Stacked transformers: Construct and anchor painted angled steel frame suitable for weight and size of transformer. Ground frame with min. #8AWG

D. Installation of transformers shall be in accordance with the NEC, as recommended by the equipment manufacturer and as shown on the drawings.

E. Install the transformers with adequate clearance at a minimum of 6 inches from wall and adjacent equipment for air circulation to remove the heat produced by transformers.

F. Install grounding and bonding in accordance with Section 26 05 26.

3.4 FIELD QUALITY CONTROL

A. Section 01 70 00 - Execution and Closeout Requirements: Field inspecting, testing, adjusting, and balancing.

B. Inspect and test in accordance with NETA ATS, except Section 4.

C. Perform inspections and tests listed in NETA ATS, Section 7.2.1.

3.5 ADJUSTING

A. Section 01 70 00 - Execution and Closeout Requirements: Testing, adjusting, and balancing.

B. Measure primary and secondary voltages and make appropriate tap adjustments.

END OF SECTION

SECTION 26 24 13 - SWITCHBOARDS

PART 1 GENERAL

1.1 SUMMARY

A. Section includes main switchboards.

B. Related Sections:

1. Section 26 05 26 - Grounding and Bonding for Electrical Systems.
2. Section 26 05 53 - Identification for Electrical Systems.
3. Section 26 25 00 - Enclosed Bus Assemblies.
4. Section 26 28 13 - Fuses.
5. Section 33 71 73 - Electrical Utility Services: Utility metering equipment.

1.2 REFERENCES

A. American National Standards Institute:

ANSI C12.1	Code for Electricity Metering
ANSI C39.1	Requirements, Electrical Analog Indicating Instruments

B. Institute of Electrical and Electronics Engineers:

IEEE C57.13	Standard Requirements for Instrument Transformers
IEEE C62.41	Recommended Practice on Surge Voltages in Low-Voltage AC Power Circuits

C. National Electrical Manufacturers Association:

NEMA AB 1	Molded Case Circuit Breakers and Molded Case Switches
NEMA FU 1	Low Voltage Cartridge Fuses
NEMA KS 1	Enclosed and Miscellaneous Distribution Equipment Switches (600 Volts Maximum)
NEMA PB 2	Deadfront Distribution Switchboards
NEMA PB 2.1	General Instructions for Proper Handling, Installation, Operation, and Maintenance of Deadfront Distribution Switchboards Rated 600 Volts or Less
NEMA SG - 3	"Low Voltage Power Circuit Breakers" pertaining to Switchboard Assemblies.

D. International Electrical Testing Association:

NETA ATS	Acceptance Testing Specifications for Electrical Power Distribution Equipment and Systems.

E. National Fire Protection Association (NFPA): National Electric Code

F. UL Listing:

489-02	Molded Case Circuit Breakers and Circuit Breakers Enclosures
891-98	Dead-Front Switchboards
1283-98	Electromagnetic Interference Filters
1449-96	Transient Voltage Surge Suppressors

G. ANSI Compliance: Comply with applicable requirements of ANSI standards pertaining to switchboard assemblies.

1.3 SUBMITTALS

A. Section 01 33 00 - Submittal Procedures: Submittal procedures.

B. Shop Drawings:

1. Sufficient information, clearly presented, shall be included to determine compliance with drawings and specifications.

2. Include electrical ratings, dimensions, mounting details, materials, required clearances, terminations, weight, temperature rise, wiring and connection diagrams, plan, front, side, and rear elevations, sectional views, bus work, circuit breaker frame sizes, trip and short-circuit rating, long-time, short-time, instantaneous and ground default settings, coordinated breaker and fuse curves, accessories, and device nameplate data.

3. Show the size, ampere-rating, number of bars per phase and neutral in each bus run (horizontal and vertical), bus spacing, equipment ground bus, and bus material.

C. Manuals:

1. Submit, simultaneously with the shop drawings, companion copies of complete maintenance and operating manuals including technical data sheets, wiring diagrams, and information for ordering replacement parts.

a. Wiring diagrams shall have their terminals identifies to facilitate installation, maintenance, and operation.

b. Wiring diagrams shall indicate internal wiring for each item of equipment and the interconnection between the items of equipment.

c. Provide a clear and concise description of operation, which gives, in detail, the information required to properly operate the equipment.

1.4 CLOSEOUT SUBMITTALS

A. Section 01 70 00 - Execution and Closeout Requirements: Closeout procedures.

B. Project Record Documents: Record actual locations, configurations, and ratings of switchboards and their components on single line diagrams and plan layouts.

C. Operation and Maintenance Data: Submit per 01700 and include recommended maintenance procedures and intervals.

1.5 QUALIFICATIONS

A. Manufacturer: Company specializing in manufacturing products specified in this section with minimum three years [documented] experience.

1.6 DELIVERY, STORAGE, AND HANDLING

A. Section 01 60 00 - Product Requirements: Requirements for transporting, handling, storing, and protecting products.

B. Coordinate equipment installations and building/door openings with general contractor prior to ordering equipment. Make necessary adjustments as required.

C. Deliver in 48 inch maximum width shipping splits, individually wrapped for protection and mounted on shipping skids.

D. Accept switchboards on site. Inspect for damage.

E. Store in clean, dry space. Maintain factory wrapping or provide additional canvas or plastic cover to protect units from dirt, water, construction debris, and traffic.

F. Handle in accordance with NEMA PB 2.1. Lift only with lugs provided. Handle carefully to avoid damage to switchboard internal components, enclosure, and finish.

1.7 ENVIRONMENTAL REQUIREMENTS

A. Section 01 60 00 - Product Requirements.

B. Conform to NEMA PB 2 service conditions during and after installation of switchboards.

1.8 FIELD MEASUREMENTS

A. Verify field measurements prior to fabrication.

1.9 SEQUENCING

A. Section 01 10 00 - Summary: Work sequence.

B. Sequence Work to avoid interferences with building finishes and installation of other products.

C. Coordinate the size and location of concrete equipment pads. Cast anchor bolt inserts into pad. Concrete, reinforcement, and formwork requirements are specified in Division 3.

D. Coordinate with other electrical work including raceways, electrical boxes and fittings, and cabling/wiring work, as necessary to interface installation of switchboard with other work.

1.10 EXTRA MATERIALS

A. Section 01 70 00 - Execution and Closeout Requirements: Spare parts and maintenance products.

PART 2 PRODUCTS

2.1 DISTRIBUTION SWITCHBOARDS

A. Manufacturers:

1. Square D.

2. Cutler-Hammer.

3. Siemens.

4. GE Electrical.

5. Substitutions: Not Permitted.

B. Product Description: NEMA PB 2, enclosed switchboard with electrical ratings and configurations as indicated on Drawings.

C. Service Conditions:

1. Temperature: 40 degrees C.

2.2 EQUIPMENT SECTIONS AND COMPONENTS:

A. General: Except as otherwise indicated, provide switchboards and ancillary components of types, sizes, characteristics, and ratings indicated, which comply with manufacturer's standard design, materials, components, and construction in accordance with published product information, and as required for a complete installation.

2.3 BASIC ARRANGEMENT

A. Type I: Switchboard shall be front accessible with the following features:

1. Device Mounting:

a. Main breaker: Individually mounted and compartmented or group mounted with feeder breakers.

b. Feeder breakers: Group mounted.

2. Section alignment: As shown on the drawings.

3. Accessibility:

a. Main section line and load terminals; Front and side.

b. Distribution section line and load terminals: Front.

c. Through bus connections: Front and end.

4. Bolted line and load connections.

5. Full height wiring gutter covers for access to wiring terminals.

6. Short Circuit Current Rating: 65,000 Amperes RMS symmetrical, minimum, or as shown on the drawings, whichever is higher.

B. Short Circuit Current Rating: The switchboard as a complete unit shall be given a single short-circuit current rating by the manufacturer. Such ratings shall be established by the actual tests by the manufacturer in accordance with UL specifications on equipment constructed similarly to the subject switchboard.

C. Series rating is not allowed.

D. Vertical and horizontal sections shall be fully rated.

2.4 HOUSING

A. Enclosure Construction: The Switchboard shall be dead-front with front accessibility. The switchboard frame shall be of formed code-gauge steel, rigidly welded and bolted together to support all cover plates, bussing, and component devices during shipment and installation. Steel base channels shall be bolted to the frame to rigidly support the entire shipping section for moving on rollers and floor mounting. Each switchboard section shall have a barriered bottom and an individually removable top plate for installation and termination of conduit. The switchboard enclosure shall be painted on all exterior and interior surfaces. The paint finish shall be a medium light gray, ANSI #49, applied by the electro-deposition process over and iron phosphate pretreatment. All front covers shall be screwed on and removable, and all doors shall be hinged with removable hinge pins. Top and bottom conduit areas shall be clearly indicated on shop drawings.

B. Provide ventilation louvers where required to limit the temperature rise of current carrying parts. All openings shall be protected against entrance of falling dirt, water, or foreign matter.

C. Group the meters and their control switches on a hinged front cover. Provide concealed hinges and latch.

2.5 BUSES

A. General: Buses shall be arranged for 3 phase, 4 wire distribution. Main phase buses (through bus), full size neutral bus, and ground bus shall be full capacity the entire length

of the switchboard. Provide for future extensions by means of bolt holes or other approved method. Brace the bus to withstand the available short circuit current at the particular location and as shown on the drawings. No magnetic material shall be used between buses to form a magnetic loop.

B. Material and Size: Buses and connections shall be hard drawn copper of 98 percent conductivity. Bus temperature rise shall not exceed 65 degrees C (149 degrees F). Section busing shall be sized based on UL and NEMA Switchboard Standards.

C. Bus Connections: All contact surfaces shall be copper. Provide a minimum of two plated bolts per splice. Where physical bus size permits only one bolt, provide a means other than friction to prevent turning, twisting or bending. Torque bolts to the manufacturer's recommended values.

D. Neutral Bus: Provide bare or plated bus and mount on insulated bus supports. Provide neutral disconnect link to permit isolation on neutral bus from the common ground bus and service entrance conductors.

E. Ground Bus: Provide an uninsulated 1/4 inch by 2 inch copper equipment ground bus bar sized per UL 891 the length of the switchboard and secure at each section.

F. Main Bonding Jumper: Connect an uninsulated 1/4 inch by 2 inch copper bus between the neutral ground buses to establish the system common ground point.

G. Bus:

1. Insulation: Fully insulate load side bus bars. Do not reduce spacing of insulated bus.

H. Ground Bus: Insulated, extend length of switchboard.

2.6 CONTROL WIRING

A. Control wiring shall be 600 Volt Class B stranded SIS. Install all control wiring complete wiring complete at the factory adequately bundled and protected. Wiring across hinges and between shipping units shall be Class C stranded. Size in accordance with NEC. Provide control circuit fuses.

2.7 MAIN CIRCUIT BREAKERS

A. Type I Switchboard: Provide UL listed and labeled molded case circuit breakers in accordance with NEC and as shown on the drawings. Circuit breakers shall be the solid state adjustable trip type.

1. Trip units shall have field adjustable tripping characteristics as follows:

a. Ampere setting (continuous).

b. Long time band.

c. Short time trip point.

d. Short time delay.

e. Instantaneous trip point.

f. Ground fault trip point.

g. Ground fault trip delay.

2. Trip settings shall be as indicated on the drawings. Final settings shall be as shown on the electrical system protective device study.

3. Breakers, which have the same rating, shall be interchangeable with each other.

2.8 FEEDER CIRCUIT BREAKERS

A. Provide UL listed and labeled molded case circuit breakers, in accordance with the NEC, as shown on the drawings, and as herein specified.

B. Non-adjustable Trip Molded Case Circuit Breakers:

1. Molded case circuit breakers shall have automatic, trip free, non-adjustable, inverse time, and instantaneous magnetic trips for 100 Ampere frame size or less. Magnetic trip shall be adjustable from 3X to 10X for breakers with 250 Ampere frame size and higher. Factory setting shall be LOW unless otherwise noted.

2. Breaker features shall be as follows:

a. A rugged, integral housing of molded insulating material.

b. Silver alloy contacts.

c. Arc quenchers and phase barriers for each pole.

d. Quick-make, quick-break, operating mechanisms.

e. A trip element for each pole, thermal magnetic type with long time delay and instantaneous characteristics, a common trip bar for all poles and a single operator.

f. Electrically and mechanically trip free.

g. An operating handle which indicates ON, TRIPPED and OFF positions.

h. Line and load connections shall be bolted.

i. Interrupting rating shall not be less than the maximum short circuit current available at the line.

j. An overload on one pole of a multipole breaker shall automatically cause all the poles of the breaker to open.

C. Branch circuit breakers shall be bolt-on, group-mounted molded plastic case, air circuit breaker type. Breakers shall have thermal-magnetic trip units and a common trip bar so that the tripping of one pole will automatically trip all the poles of the breaker. Breakers shall be trip-free and trip-indicating and shall have quick-make, quick-break contacts.

D. Adjustable Trip Molded Case Circuit Breakers:

1. Provide molded case, solid state adjustable trip type circuit breakers.

2. Trip units shall have field adjustable tripping characteristics as follows:

a. Ampere setting (continuous).

b. Long time band.

c. Short time trip point.

d. Short time delay.

e. Instantaneous trip point.

f. Ground fault trip point (See drawings if required).

g. Ground fault trip delay (See drawings if required).

3. Trip settings shall be as indicated on the drawings. Final settings shall be shown on the electrical system protective device study.

4. Breakers, which have same rating, shall be interchangeable with each other.

E. Line and Load Terminations: Accessible from front only of switchboard, suitable for conductor materials and sizes as indicated on Drawings.

F. Utility Metering Compartment: Furnish metering transformer compartment for Utility Company's use, in accordance with Utility Company requirements.

G. Pull Section: Size as indicated on Drawings and width, depth and height to match switchboard. Arrange as indicated on Drawings.

H. Future Provisions: Fully equip spaces for future devices with bussing and bus connections, insulated and braced for short circuit currents.

I. Enclosure: Type 1 - General Purpose.

J. Align sections at front only.

K. Switchboard Height: As shown on drawings, excluding floor sills, lifting members and pull boxes.

L. Finish: Manufacturer's standard light gray enamel over external surfaces. Coat internal surfaces with minimum one coat corrosion-resisting paint, or plate with cadmium or zinc.

M. Mimic Bus: Show bussing, connections and devices in single line form on front panels of switchboard using black color light metal strips, fastened flat against panel face with screws or rivets.

N. All circuit breakers shall have A.I.C ratings as shown on drawings.

2.9 POWER METERS

A. Furnish digital meters and display for volts, amps, kW, kVA, and power factor. Square 'D' 'ION 7550' or equivalent.

2.10 ACCESSORIES

A. Circuit Breaker Lifting Device: Carriage and track on top of each switchboard with lifting device to serve draw-out circuit breakers in switchboard.

2.11 SOURCE QUALITY CONTROL

A. Furnish shop inspection and testing in accordance with NEMA PB 2.

B. Make completed switchboard available for inspection at manufacturer's factory prior to packaging for shipment. Notify Architect/Engineer at least seven days before inspection is allowed.

C. Allow witnessing of factory inspections and tests at manufacturer's test facility. Notify Architect/Engineer at least seven days before inspections and tests are scheduled.

PART 3 EXECUTION

3.1 EXAMINATION

A. Section 01 30 00 - Administrative Requirements: Coordination and project conditions.

B. Verify surface is suitable for switchboard installation.

3.2 INSTALLATION

A. Install in accordance with NEMA PB 2.1.

B. Tighten accessible bus connections and mechanical fasteners after placing switchboard.

C. Install engraved plastic nameplates in accordance with Section 26 05 53.

D. Install breaker circuit directory.

E. Ground and bond switchboards in accordance with Section 26 05 26.

3.3 FIELD QUALITY CONTROL

A. Section [01 40 00 - Quality Requirements] [01 70 00 - Execution and Closeout Requirements]: Field inspecting, testing, adjusting, and balancing.

B. Inspect and test in accordance with NETA ATS, except Section 4.

C. Perform inspections and tests listed in NETA ATS, Section 7.1.

3.4 ADJUSTING

A. Section 01 70 00 - Execution and Closeout Requirements: Testing, adjusting, and balancing.

B. Adjust operating mechanisms for free mechanical movement.

C. Tighten bolted bus connections.

D. Adjust circuit breaker trip and time delay settings to values as instructed by Architect/Engineer.

3.5 CLEANING

A. Section 01 70 00 - Execution and Closeout Requirements: Final cleaning.

B. Touch up scratched or marred surfaces to match original finish.

END OF SECTION

SECTION 26 24 16 - PANELBOARDS

PART 1 GENERAL

1.1 SUMMARY

A. Section includes distribution and branch circuit panelboards.

B. Related Sections:

1. Section 26 05 26 - Grounding and Bonding for Electrical Systems.
2. Section 26 05 53 - Identification for Electrical Systems.
3. Section 26 28 19 – Low Voltage Electrical Power Conductors and Cables (600 volts and below)

1.2 REFERENCES

A. Institute of Electrical and Electronics Engineers:

1. IEEE C62.41 - Recommended Practice on Surge Voltages in Low-Voltage AC Power Circuits.

B. National Electrical Manufacturers Association:

1. NEMA AB 1 - Molded Case Circuit Breakers and Molded Case Switches.
2. NEMA ICS 2 - Industrial Control and Systems: Controllers, Contactors, and Overload Relays, Rated Not More Than 2000 Volts AC or 750 Volts DC.
3. NEMA ICS 5 - Industrial Control and Systems: Control Circuit and Pilot Devices.
4. NEMA KS 1 - Enclosed and Miscellaneous Distribution Equipment Switches (600 Volts Maximum).
5. NEMA PB 1 - Panelboards.
6. NEMA PB 1.1 - General Instructions for Proper Installation, Operation, and Maintenance of Panelboards Rated 600 Volts or Less.

C. International Electrical Testing Association:

1. NETA ATS - Acceptance Testing Specifications for Electrical Power Distribution Equipment and Systems.

D. National Fire Protection Association:

1. NFPA 70 - National Electrical Code.

E. Underwriters Laboratories Inc.:

1. UL 67 - Safety for Panelboards.
2. UL 1283 - Electromagnetic Interference Filters.
3. UL 1449 - Transient Voltage Surge Suppressors.

1.3 SUBMITTALS

A. Section 01 33 00 - Submittal Procedures: Requirements for submittals.

B. Shop Drawings: Indicate as a minimum outline and support point dimensions, voltage, main bus ampacity, integrated short circuit ampere rating and circuit breaker arrangement and sizes.

C. Product Data: Submit catalog data showing specified features of standard products.

D. Complete nameplate data including manufacturer's name and catalog number.

1.4 CLOSEOUT SUBMITTALS

A. Section 01 70 00 - Execution and Closeout Requirements: Requirements for submittals.

B. Project Record Documents: Record actual locations of panelboards and record actual circuiting arrangements.

C. Operation and Maintenance Data: Submit spare parts listing; source and current prices of replacement parts and supplies; and recommended maintenance procedures and intervals.

1.5 QUALITY ASSURANCE:

A. Manufacturer's Qualifications: Firms regularly engaged in the manufacture of panelboards and enclosures, of types, sizes and ratings required; whose products have been in satisfactory use in similar service for not less than (5) five years.

B. Installer's Qualifications: A firm with at least three (3) years of successful installation experience on projects utilizing panelboards similar to those required for this project.

C. Codes and Standards:

1. Electrical Code Compliance: Comply with applicable local code requirements of the authority having jurisdiction and NEC Article 384 as applicable to the installation and construction of electrical panelboards and enclosures.

2. UL Compliance: Comply with applicable requirements of UL 67, "Electric Panelboards", and UL Codes 50, 869 and 1053 pertaining to panelboards, accessories and enclosures. Provide panelboard units that are UL listed and labeled.

1.6 MAINTENANCE MATERIALS

A. Section 01 70 00 - Execution and Closeout Requirements: Requirements for maintenance products.

B. Furnish two of each panelboard key. Panelboards keyed alike to Owner's current keying system.

PART 2 PRODUCTS

2.1 PANELBOARDS

A. Panelboards shall be in accordance with UL, NEMA, NEC, and as shown on the drawings.

B. Panelboards shall be standard manufactured products. All components of the panelboards shall be the product and assembly of the same manufacturer. All similar units of all panelboards to be of the same manufacturer.

C. All panelboards shall be dead front safety type. Arrange sections for easy removal without disturbing other sections.

D. All panelboards shall be completely factory assembled with molded case circuit breakers.

E. Main circuit breaker shall have vertical mounting position.

F. Panelboards shall have main breaker or main lugs, bus size, voltage, phase, top or bottom feed, and flush or surface mounting as shown on scheduled and on the drawings.

G. Power Distribution Panelboards shall be Square D type ‘I Line’, General Electric type ‘Spectra’, Cutler Hammer type ‘PRL3a’or Siemens equivalent. Voltage shall be indicated.

H. Lighting and Appliance: Panelboards shall be Square D type ‘NQOD’ or ‘NF’, General Electric A-series or ‘S2’, Cutler-Hammer type PRL2 or Siemens equivalent. Panelboard boxes shall be five and three-fourths (5 ¾”) deep. Voltage shall be as indicated.

I. Panelboards shall have the following features:

1. Nonreduced size copper bus bars, and connection straps bolted together and rigidly supported on molded insulators. Bus bar taps for panels with single pole branches shall be arranged for sequence phasing of branch circuit devices.

2. Full size, copper neutral bar (unless shown otherwise on drawings), mounted on insulated supports.

3. Copper ground bar with sufficient terminals for all grounding wires. Buses braced for the available short circuit current, but not less than 10,000 amperes symmetrical for 120/208 volt panelboards, and 14,000 amperes symmetrical for 277/480 volt panelboards.

4. All breakers and phase bus connections shall be arranged so that it will be possible to substitute a 2-pole breaker for two single pole breakers, and a 3-pole breaker for three single pole breakers, when trip is 30 Amps or less and frame size is 100 amperes or less, without having to drill and tap the main bus bars at bus straps.

5. Design interior so that protective devices can be replaced without removing adjacent units, main bus connectors, and without drilling or tapping. Panel phase bus connections to protective devices shall not be riveted to the panel bus and shall be field removable by means of a screw driver.

6. Where designated on panel schedule as “space”, include all necessary bussing, device support and connections. Provide blank cover for each space.

7. In two section panelboards, the main bus in each section shall be full size. The first section shall be furnished with subfeed or feed-through lugs as shown on drawings on the line side with cable connections to the second section. Panelboard sections with tapped bus or crossover bus are not acceptable.
8. Series rated panelboards are not permitted.
9. Provide keyed alike system for all panelboards. In existing buildings where new panels are installed, provide keyed alike locks as directed by owner.
10. Provide a type written directory card, metal holder, and transparent cover. Permanently mount holders on inside of doors.

J. Painting: Factory primed and painted.

2.2 MOLDED CASE CIRCUIT BREAKERS FOR PANELBOARDS

A. Breakers shall be UL listed and labeled, in accordance with the NEC, as shown on the drawings, and as specified.

B. Circuit breakers in panelboards shall be bolt on type on phase bus bar or branch circuit bar.

C. Molded case circuit breakers shall have minimum interrupting rating and not less than shown above.
1. 120/208 volt Panelboard: 10,000 amperes symmetrical.
2. 277/480 volt Panelboard: 14,000 amperes symmetrical.

D. Breaker features shall be as follows.
1. A rugged, integral housing of molded insulating material.
2. Silver alloy contacts.
3. Arc quenches and phase barriers for each pole.
4. Over-center, trip-free, toggle-type, quick-make, quick-break, operating mechanisms.
5. A trip element for each pole, thermal magnetic type with long time delay and instantaneous characteristics, a common trip bar for all poles and a single operator.
6. Electrically and mechanically trip free.
7. An operating handle which indicates ON, TRIPPED, and OFF positions.
   a. Line connections shall be bolted.
   b. Interrupting rating shall not be less than the maximum short circuit current available at the line terminals as indicated on the drawings.
8. An overload on one pole of a multipole breaker shall automatically cause all the poles of the breaker to open.
9. For circuit breakers being added to existing panelboards, coordinate the breaker type with existing panelboards. Modify the panel directory.
10. Factory assembled.

11. Construct breakers for mounting and operating in any physical position and operating in ambient temperature of 40°C.

12. Provide breakers with mechanical screw type removable connector lugs; /CU rated.

E. Circuit Breakers shall be UL Listed for air conditioning branch circuits.

2.3 SEPARATELY ENCLOSED MOLDED CASE CIRCUIT BREAKERS

A. Where separately enclosed molded case circuit breakers are shown on the drawings, provide circuit breakers in accordance with the applicable requirements of those specified for panelboards.

B. Enclosures are to be of the NEMA types shown on the drawings. Where the types are not shown, they are to be the NEMA type most suitable for the environmental conditions where the breakers are being installed.

PART 3 EXECUTION

3.1 INSTALLATION

A. Install panelboards in accordance with NEMA PB 1.1.

B. Install panelboards plumb.

C. Install recessed panelboards flush with wall finishes.

D. Installation shall be in accordance with NEC, as shown on the drawings, and as specified.

E. Locate panelboards so that the present and future conduits can be conveniently connected. Coordinate the sizes of the cabinets with designated closet space.

F. Tighten connectors and terminals, including screws and bolts, in accordance with equipment manufacturer's published torque-tightening values for equipment connectors.

G. Fasten enclosures firmly to walls and structural surfaces, ensuring that they are permanently and mechanically anchored.

H. Install a typewritten schedule of circuits in each. Schedules shall be typed on the panel directory cards and installed in the appropriate panelboards, incorporating all applicable contract changes pertaining to that schedule. Include the room numbers and items served on the cards.

I. Mount top of panelboard at 6'- 6". If panelboard length is longer than standard, then mount panelboard so that maximum height of the top circuit breaker above finished floor shall not exceed 78 inches. For panelboards, which are too high, mount panelboard so that the bottom of the cabinets will not be less than 6 inches above the finished floor.

J. Circuit numbers indicated on the drawings are shown for the purpose of clarifying the grouping of outlets. The actual number assigned to the circuit in the panelboard shall suit the bussing and branch

circuiting of the panel. Provide owner as-built drawings showing the actual circuit numbers being used for each device on each brand circuit.

K. Panelboards shall be installed complete with connectors and associated hardware for all circuit breakers and circuit breaker spaces listed in the panelboard schedule.

L. When connecting equipment to existing panelboards, the new and existing circuit breakers shall be identified. A new circuit directory card shall be provided.

M. Provide equipment grounding connections for panelboard enclosures as indicated.

N. Prior to energization, check panelboards for electrical continuity of circuits and for short-circuits.

O. Install filler plates for unused spaces in panelboards.

P. Install engraved plastic nameplates in accordance with Section 26 05 53.

Q. Install spare conduits out of each recessed panelboard to accessible location above ceiling. Minimum spare conduits: 5 empty ¾ inch. Identify each as SPARE.

R. Ground and bond panelboard enclosure according to Section 26 05 26. Connect equipment ground bars of panels in accordance with NFPA 70.

3.2 FIELD QUALITY CONTROL

A. Section [01 40 00 - Quality Requirements [01 70 00 - Execution and Closeout Requirements: Field inspecting, testing, adjusting, and balancing.

B. Inspect and test in accordance with NETA ATS.

3.3 ADJUSTING

A. Section [01 70 00 - Execution and Closeout Requirements]: Requirements for starting and adjusting.

B. Measure steady state load currents at each panelboard feeder; rearrange circuits in panelboard to balance phase loads to within 20 percent of each other. Maintain proper phasing for multi-wire branch circuits.

C. Adjust operating mechanisms for free mechanical movement.

D. Touch-up scratched or marred surfaces to match original finishes.

END OF SECTION

SECTION 26 27 26 - WIRING DEVICES

PART 1 GENERAL

1.1 SUMMARY

A. Section includes wall switches; wall dimmers; receptacles; multioutlet assembly; and device plates and decorative box covers.

B. Related Sections:

1. Section 26 05 21 - Undercarpet Cable.
2. Section 26 05 33 - Raceway and Boxes for Electrical Systems: Outlet boxes for wiring devices.
3. Section 26 05 00 - Basic Methods and Requirements (Electrical).
4. Section 26 05 26 - Grounding and Bonding for Electrical Systems.
5. Section 26 05 19 - Low-Voltage Electrical Power Conductors and Cables.

1.2 REFERENCES

A. National Electrical Manufacturers Association:

NEMA WD 1	General Requirements for Wiring Devices
NEMA WD 6	Wiring Devices-Dimensional Requirements

B. National Fire Protection Association (NFPA):

70	National Electrical Code (NEC)

C. Underwriter’s Laboratories, Inc. (UL):

UL-5	Surface Metal Raceways and Fittings
UL-20	General-Use Snap Switches
UL-231	Power Outlets
UL-467	Grounding and Bonding Equipment
UL-498	Attachment Plugs and Receptacles
UL-943	Ground-Fault Circuit Interrupters

1.3 SUBMITTALS

A. Section 01 33 00 - Submittal Procedures: Submittal procedures.

B. Product Data: Submit manufacturer's catalog information showing dimensions, colors, and configurations.

1.4 QUALIFICATIONS

A. Manufacturer: Company specializing in manufacturing products specified in this section with minimum three years experience.

PART 2 PRODUCTS

2.1 WALL SWITCHES

A. Manufacturers:

1. Pass & Seymour.
2. Cooper.
3. Hubbell.
4. Leviton.
5. Substitutions: Not permitted.

B. Toggle switches shall be totally enclosed tumbler type with bodies of phenolic compound. Toggle handles shall be ivory in color unless otherwise specified. The rocker type switch is not acceptable and will not be approved.

1. Shall be single unit toggle, butt contact, quiet AC type, heavy-duty general-purpose use with an integral self grounding mounting strap with break-off plasters ears and provisions for back wiring with separate metal wiring clamps and side wiring with captively held binding screws.
2. Shall be color coded for current rating, listed by Underwriters Laboratories, Inc., and meet the requirements of NEMA WD 1, Heavy-Duty and UL 20.
3. Ratings: 20 amperes at 120/277 volts AC.
   a. The switches shall be mounted on the striker plate side of doors.
   b. Incorporate barriers between switches with multigang outlet boxes where required by the NEC.
   c. Switches connected to isolated type electrical power systems shall be double pole.
   d. All toggle switches shall be of the same manufacturer.

2.2 WALL DIMMERS

A. Manufacturers, commercial, specification grade only:

1. Lutron.
2. Pass & Seymour.

3. Cooper.
4. Leviton.
5. Substitutions: Not permitted.

B. Use low voltage dimmers for low voltage lighting, fluorescent for fluorescent dimming.

C. Body and Handle: color to match switches, receptacles, and wall switches.

D. Voltage: 277 volts unless otherwise shown on drawings.

E. Power Rating: As indicated on Drawings.

F. Accessory Wall Switch: Match dimmer appearance.

2.3 RECEPTACLES

A. Manufacturers:
1. Pass & Seymour.
2. Cooper.
3. Hubbell.
4. Leviton.
5. Substitutions: Not permitted.

B. General: All receptacles shall be listed by Underwriters Laboratories, Inc.
1. Mounting straps shall be plated steel, with break-off plaster ears and shall include a self-grounding feature. Terminal screws shall be brass, brass plated or a copper alloy metal.
2. Receptacles shall have provisions for back wiring with separate metal clamp type terminals (four min.) and side wiring from four captively held binding screws.

C. Duplex receptacles shall be single phase, 20 Ampere, 120 Volts, 2-pole, 3-wire, and conform to the NEMA 5-20R configuration in NEMA WD 6. The duplex type shall have break-off feature for two-circuit operation. The ungrounded pole of each receptacle shall be provided with a separate terminal.
1. Color shall be by Architect. All receptacles shall be unswitched unless otherwise noted.

D. Receptacles; 20, 30 and 50 ampere, 250 volts: Shall be complete with appropriate cord grip plug. Devices shall meet UL 231.

E. Weatherproof Receptacles: Shall consist of a weather resistant type duplex receptacle, mounted in box with a gasketed, weatherproof, metallic cover over receptacle. The weatherproof integrity shall not be affected when heavy duty specification attachment plug caps are inserted.

2.4 WALL PLATES

A. Wall plates for switches and receptacles shall be type 302 stainless steel and smooth nylon for finished areas as specified or directed by Architect. Oversize plates are not acceptable.

B. Nylon plates shall match color of device unless otherwise specified.

C. Standard NEMA design, so that products of different manufacturers will be interchangeable. Dimensions for openings in wall plates shall be accordance with NEMA WD1.

D. For receptacles or switches mounted adjacent to each other, wall plates shall be common for each group of receptacles or switches.

E. Wall plates for data, telephone or other communication outlets shall be as specified in the associated specification and shall match switch and receptacle wall plates.

F. Phenolic Labels, showing panel and circuit, shall be attached to each wall plate.

PART 3 EXECUTION

3.1 EXAMINATION

A. Section 01 30 00 - Administrative Requirements: Coordination and project conditions.

B. Verify outlet boxes are installed at proper height.

C. Verify wall openings are neatly cut and completely covered by wall plates.

D. Verify branch circuit wiring installation is completed, tested, and ready for connection to wiring devices.

3.2 PREPARATION

A. Clean debris from outlet boxes.

3.3 EXISTING WORK

A. Disconnect and remove abandoned wiring devices.

B. Modify installation to maintain access to existing wiring devices to remain active.

C. Clean and repair existing wiring devices to remain or to be reinstalled.

3.4 INSTALLATION

A. Installation shall be in accordance with the NEC and NECA's "Standard of Installation", and in accordance with standard industry practices.

B. Install devices in clean boxes, free from dirt and debris.

C. Install wall plates after painting.

D. Wall plates shall not project out from wall.

E. Install a No.12 green ground wire from device grounding terminal to grounding bus in panelboard.

F. Install devices plumb and level.

G. Install switches with OFF position down.

H. Install wall dimmers to achieve full rating specified and indicated after derating for ganging as instructed by manufacturer.

I. Do not share neutral conductor on load side of dimmers.

J. Install receptacles with grounding pole on bottom.

K. Connect wiring device grounding terminal to outlet box with green bonding jumper and branch circuit equipment grounding conductor.

L. Connect wiring devices by wrapping solid conductor around screw terminal. Install stranded conductor for branch circuits 10 AWG and smaller. When stranded conductors are used in lieu of solid, use crimp on fork terminals for device terminations. Do not place bare stranded conductors directly under device screws.

M. Use jumbo size plates for outlets installed in masonry walls.

N. Install galvanized steel plates on outlet boxes and junction boxes in unfinished areas, above accessible ceilings, and on surface mounted outlets in unfinished locations.

3.5 INTERFACE WITH OTHER PRODUCTS

A. Coordinate locations of outlet boxes provided under Section 26 05 33 to obtain mounting heights as specified and as indicated on drawings.

B. Install wall switch 48 inches above finished floor.

C. Install convenience receptacle 20” to Top above finished floor.

D. Install convenience receptacle 6 inches above back splash of counter unless otherwise noted or shown differently on architectural plans. Mount horizontally where shown on plans or directed by Architect.

E. Install switches and dimmers 48 inches above finished floor.

F. Coordinate installation of wiring devices with floor box service fittings.

3.6 FIELD QUALITY CONTROL

A. Section [01 40 00 - Quality Requirements] [01 70 00 - Execution and Closeout Requirements]: Field inspecting, testing, adjusting, and balancing.

B. Inspect each wiring device for defects.

C. Operate each wall switch with circuit energized and verify proper operation.

D. Verify each receptacle device is energized.

E. Test each receptacle device for proper polarity.

F. Test each GFCI receptacle device for proper operation.

3.7 ADJUSTING

A. Section 01 70 00 - Execution and Closeout Requirements: Testing, adjusting, and balancing.

B. Adjust devices and wall plates to be flush and level.

3.8 CLEANING

A. Section 01 70 00 - Execution and Closeout Requirements: Final cleaning.

B. Clean exposed surfaces to remove splatters and restore finish.

END OF SECTION

SECTION 26 28 19 - ENCLOSED SWITCHES AND MOTOR STARTERS

PART 1 GENERAL

1.1 SUMMARY

A. Section includes fusible and nonfusible switches.

B. Related Sections:

1. Section 26 05 00 - Common Work Results for Electrical.
2. Section 26 05 26 - Grounding and Bonding for Electrical Systems.
3. Section 26 05 29 - Hangers and Supports for Electrical Systems.
4. Section 26 05 53 - Identification for Electrical Systems.
5. Section 26 05 19 - Low-Voltage Electrical Power Conductors and Cables.
6. Section 26 05 33 - Raceway and Boxes for Electrical Systems.

1.2 REFERENCES

A. National Electrical Manufacturers Association:

1. NEMA FU 1 - Low Voltage Cartridge Fuses.
2. NEMA KS 1 - Enclosed and Miscellaneous Distribution Equipment Switches (600 Volts Maximum).
3. ICS 1-00 – Industrial Control and Systems General Requirements.
4. ICS 1.1-03 – Safety Guidelines for the Application, Installation and Maintenance of Solid State Control.
5. ICS 2-00 – Industrial Control and Systems, Controllers, Contractors and Overload Relays Rated 600 Volts DC.
6. ICS 6-01 – Industrial Control and Systems Enclosures.
7. ICS 7-00 – Industrial Control and Systems Adjustable-Speed Drives
8. ICS 7.1-00 – Safety Standards for Construction and Guide for Selection, Installation and Operation of Adjustable-Speed Drive Systems.

B. International Electrical Testing Association:

1. NETA ATS - Acceptance Testing Specifications for Electrical Power Distribution Equipment and Systems.

C. National Fire Protection Association (NFPA):

70	National Electrical Code (NEC)

D. Underwriters Laboratories, Inc (UL):

98	Enclosed and Dead-Front Switches
198C	High-Interrupting-Capacity Fuses, Current Limiting Types
198E	Class R Fuses
977	Fused Power-Circuit Devices
508	Industrial Control Equipment

1.3 SUBMITTALS

A. Section 01 33 00 - Submittal Procedures: Submittal procedures.

B. Product Data: Submit switch ratings and enclosure dimensions.

C. Shall label each switch/starter with its associated equipment tag (i.e. AHU-1).

1.4 CLOSEOUT SUBMITTALS

A. Section 01 70 00 - Execution and Closeout Requirements: Closeout procedures.

B. Project Record Documents: Record actual locations of enclosed switches and ratings of installed fuses.

1.5 QUALIFICATIONS

A. Manufacturer: Company specializing in manufacturing products specified in this section with minimum three years experience.

PART 2 PRODUCTS

2.1 FUSIBLE SWITCH ASSEMBLIES

A. Manufacturers:

1. Square D.
2. Cutler-Hammer.
3. G.E.
4. Siemens.
5. Substitutions: Not Permitted.

B. Product Description: Enclosed load interrupter knife switch.

C. Fuse clips: Designed to accommodate NEMA FU 1, Class R fuses.

D. Fuses shall be Class RK1.

E. Enclosure: NEMA KS 1, to meet conditions. Fabricate enclosure from steel finished with manufacturer's standard gray. Stainless steel if marine application.

1. Interior Dry Locations: Type 1.
2. Exterior Locations: Type 3R.

F. Furnish switches with entirely copper current carrying parts.

G. Shall be quick-make, quick-break type in accordance with UL 98, NEMA KS 1 and NEC.

H. Shall have a minimum duty rating, NEMA Heavy Duty (HD) classification for voltage required.

I. Shall be horsepower rated.

J. Shall have the following features:

1. Switch mechanism shall be the quick-make, quick-break type.
2. Copper blades, visible in the OFF position.
3. An arc chute for each pole.
4. External operating handle shall indicate ON and OFF position and shall have lock-open padlocking provisions.
5. Mechanical interlock shall permit opening of the door only when the switch is in the OFF position, defeatable by a special tool to permit inspection.
6. Fuse holders for the sizes and types of fuses specified.
7. Solid neutral for each switch being installed in a circuit which includes a neutral conductor.
8. Ground Lugs: One for each ground conductor.
9. Handle lockable in OFF position.
10. Entirely copper current carrying parts.

K. Where switch is located on the load side of a VFD, provide one (1) normally open (NO) auxiliary contact to interlock the VFD run permissive circuit. Disconnecting on-line motor shall shut down VFD. When the switch is closed, a permissive run signal shall restart the VFD at low voltage and frequency. Interlock equipment with two (2) #12 AWG in 3/4 inch conduit.

2.2 NONFUSIBLE SWITCH ASSEMBLIES

A. Shall be same as fusible switch assembly (2.1 above) except it shall not accept fuse.

2.3 SWITCH RATINGS

A. Switch Rating: Horsepower rated for AC or DC as indicated on Drawings.

B. Short Circuit Current Rating: UL listed for 10,000 rms symmetrical amperes minimum without fuses. 200,000 rms symmetrical amperes when used with or protected by Class R fuses (30-600 ampere switches employing appropriate fuse rejection schemes). 200,000 rms symmetrical amperes when used with or protected by Class L fuses (800-1200 ampere).

2.4 MOTOR STARTERS, GENERAL

A. Shall have the following features:

1. Separately enclosed unless part of another assembly.
2. Circuit breakers and safety switches within the motor controller enclosures shall have external operating handles with lock-open padlocking provisions and shall indicate the ON and OFF positions.
3. Motor control circuits:
   a. Shall operate at not more than 120 Volts.
   b. Shall be grounded except as follows:
      1. Where isolated control circuits are shown.
      2. Where manufacturers of equipment assemblies recommend that the control circuits be isolated.
   c. Incorporate a separate, heavy duty, control transformer within each motor controller enclosure to provide the control voltage for each motor operating over 120 Volts.
   d. Incorporate over current protection for both primary and secondary windings of the control power transformers in accordance with the NEC.
4. Overload current protective devices:
   a. Overload relay thermal.
   b. One for each pole.
   c. Manual reset on the door or each motor controller enclosure.
   d. Correctly sized for the associated motor’s rated full load current.
   e. Check every motor controller after installation and verify that correct sizes of protective devices have been installed.
   f. Deliver four copies of a summarized list to the owner, which indicates and adequately identifies every motor controller installed. Include the catalog numbers for the correct sizes of protective devices for the motor controllers.
5. Hand-Off-Automatic (H-O-A) switch is required unless specifically stated on the drawings as not required for a particular starter. H-O-A switch is not required for manual motor starters.
6. Incorporate into each control circuit a 120 Volt, solid state time delay relay (ON delay), minimum adjustable range from 0.3 to 10 minutes, with transient protection. Time delay relay is not required where H-O-A switch is not required.

7. Auxiliary contacts, pilot lights, pushbuttons and other devices and accessories as shown on the drawings or otherwise required.

8. Enclosures:

   a. Shall be the NEMA types shown on the drawings for the motor controllers.

   b. Shall be the NEMA types which are the most suitable for the environmental conditions where the motor controllers are being installed.

   c. Doors mechanically interlocked to prevent opening unless the breaker or switch within the enclosure is open. Provision for padlock must be provided.

   d. Enclosures shall be primed and finish coated at the factory with the manufacturer's prime coat and standard finish.

B. Motor controllers incorporated with equipment assemblies shall also be designed for the specific requirements of the assemblies.

C. For motor controllers being installed in existing motor control centers or panelboards, coordinate with the existing centers or panelboards.

D. Additional requirements for specific motor controllers, as indicated in other sections, shall also apply.

E. Provide a disconnecting means or safety switch near and within sight of each motor. Provide all wiring and conduit required to facilitate a complete and code complied installation.

F. Refer to paragraph, MOTOR CONTROL STATIONS, in this section for additional requirements.

2.5 MANUAL MOTOR STARTERS

A. Shall be in accordance with applicable requirements of 2.4 above.

B. Manual motor starters.

   1. Starters shall be AC, general-purpose Class A, manually operated type with full voltage controller for induction motors, rated in horsepower.

   2. Units shall include overload protection, red pilot light, NO auxiliary contact and toggle operator.

C. Fractional horsepower manual motor starters.

   1. Starters shall be AC, general-purpose Class A, manually operated type with full voltage controller for fractional horsepower induction motors.

   2. Units shall include thermal overload protection, red pilot light and toggle operator.

D. Motor starting switches.

1. Starters shall be AC, general-purpose Class A, manually operated type with full voltage controller for fractional horsepower induction motors.
2. Units shall include thermal overload protection, red pilot light and toggle operator.

2.6 MAGNETIC MOTOR STARTERS

A. Shall be in accordance with applicable requirements of 2.4 above.

B. Starters shall be AC, general-purpose, Class A magnetic controllers for induction motors rated in horsepower. Minimum size 0.

C. Where combination motor starters are used, combine starter with protective or disconnect device in a common enclosure.

D. Provide phase loss protection for each starter serving motors 15 h.p. or larger with contacts to de-energize the starter upon loss of any phase.

E. Combination magnetic, full voltage starters for three phase motors shall be three pole horsepower rated, magnetically operated switches with four auxiliary contacts.

PART 3 EXECUTION

3.1 EXISTING WORK

A. Disconnect and remove abandoned enclosed switches.

B. Maintain access to existing enclosed switches and other installations remaining active and requiring access. Modify installation or provide access panel.

C. Clean and repair existing enclosed switches to remain or to be reinstalled.

3.2 INSTALLATION

A. Install disconnect switches in accordance with the NEC.

B. Install enclosed switches plumb. Provide supports in accordance with Section 26 05 29.

C. Height: 5 feet to operating handle.

D. Install fuses for fusible disconnect switches.

E. Install engraved plastic nameplates in accordance with Section 26 05 53.

F. Apply adhesive tag on inside door of each fused switch indicating NEMA fuse class and size installed.

G. Install motor control equipment in accordance with manufacturer's recommendations, the NEC, NEMA and as shown on the drawings.

H. Install Variable Speed Motor Controllers in accordance with manufacturer's recommendations, the NEC, as shown on the drawings and in accordance with NEMA ICS 7.1.C.

I. Furnish and install heater elements in motor starters to match the installed motor characteristics.

J. Ensure proper direction of rotation of each motor.

K. Two weeks prior to the final inspection, provide one complete set of spare fuses (including heater elements) for each starter/controller installed on this project.

L. Motor starters or any other electrical equipment located in smoke or fire rated walls shall be mounted on Unistrut channels. Channels shall be supported from floor and structure above the ceiling. There shall be no penetrations of the fire rated assembly pursuant to the equipment installation.

M. Unless otherwise indicated, motor starters shown on the drawing shall be furnished and installed under this Section. The full load current and starting characteristics of each motor shall be verified for proper selection of motor over load devices.

N. Furnish and install all steel shapes, etc, necessary for a support of all motor starters.

O. Tighten connectors and terminals, including screws and bolts, in accordance with equipment manufacturer's published torque tightening values for equipment connectors.

3.3 IDENTIFICATION SIGNS

A. Install nameplate identification signs on each disconnect switch to identify the equipment controlled.

B. Nameplates shall be laminated black phenolic resin with a white core, with engraved lettering, a minimum of 1/4 inch high. Secure nameplates with screws.

3.4 FIELD QUALITY CONTROL

A. Section [01 40 00 - Quality Requirements] [01 70 00 - Execution and Closeout Requirements]: Field inspecting, testing, adjusting, and balancing.

B. Inspect and test in accordance with NETA ATS, except Section 4.

C. Perform inspections and tests listed in NETA ATS, Section 7.5.

END OF SECTION

SECTION 26 41 00 - LIGHTNING PROTECTION SYSTEM

PART 1 GENERAL

1.1 DESCRIPTION

A. This section specifies the furnishing, complete installation of a complete master labeled lightning protection system, complying with NFPA 780, UL 96 and UL 96A.

1.2 RELATED WORK

A. Section 26 05 00, COMMON WORK RESULTS FOR ELECTRICAL: General electrical requirements and items that are common to more than one section of Division 16.

B. Section 26 05 26, GROUNDING: Requirements for personnel safety and to provide a low impedance path to ground for possible ground faults.

1.3 SUBMITTALS

A. Submit in accordance with Section 26 05 00, COMMON WORK RESULTS FOR ELECTRICAL.

B. Shop Drawings:

1. Isometric and plan views showing layout and connections to the required metal surfaces.
2. Show the methods of mounting the system to the adjacent construction.

C. Qualifications: Submit proof that the installer of the lightning protection system has had suitable and adequate experience installing other lightning protection systems, and is capable of installing the system as recommended by the manufacturer of the equipment.

D. Certification that the lightning protection system has been inspected by a UL representative and has been approved by UL without variation.

1.4 APPLICABLE PUBLICATIONS

A. Publications listed below (including amendments, addenda, revisions, supplements and errata) form a part of this specification to the extent referenced. Publications are referenced in the text by the basic designation only.

B. National Fire Protection Association (NFPA):

70	National Electric Code (NEC)
780	Standard for the Installation of Lightning Protection Systems

C. Underwriters Laboratories, Inc. (UL):

90	Lightning Protection Components
96A	Installation Requirements for Lightning Protection Systems

D. LPI Compliance: Comply with requirements of Lightning Protection Institute (LPI) Standards 175, 176, and 177, pertaining to lightning protection system material, components, installation, and testing procedures.

1.5 QUALITY ASSURANCE

A. Manufacturers: Firms regularly engaged in the manufacture of lightning protection system components of types, sizes, and ratings required; whose products have been in satisfactory use in similar service for not less than three (3) years, and who are Class I manufacturer - members of Lightning Protection Institute.

PART 2 PRODUCTS

2.1 MATERIALS

A. Attach master labels “A” or “B” to each item by its manufacturer as evidence that the materials have been manufactured in conformance with the UL Standards for master label lightning protection materials.

B. In addition to conformance to UL 96, the component material requirements are as follows:

1. Conductors: Electrical grade copper.
2. Air terminals: Solid copper, not less than 3/8 inch diameter, with sharp nickel-plated points.
3. Ground rods: Copper clad steel, not less than 3/4 inch diameter by 10 feet long.
4. Ground plates: Solid copper, not less than 1/16 inch thick.
5. Tubing: Stiff copper or brass.

C. Anchors and fasteners: Bolt type which are most suitable for the specific anchor and fastener installations.

D. Ground rods shall be copper clad, size as shown on drawings.

E. See drawings for additional information and requirements.

PART 3 EXECUTION

3.1 INSTALLATION:

A. Install the conductors as inconspicuously as practical and with the proper bends.

B. Install the vertical conductors within the concealed cavity of exterior walls. Run the conductors to the exterior at elevations below the finished grade and make the ground connections to the earth outside of the building or stack perimeter.

C. Make connections of dissimilar metal with bimetallic type fittings to prevent electrolytic action.

D. Use the exothermic welding type connections that form solid metal joints in the main vertical and horizontal conductors, and for connections that are not exposed in the finish work.

E. Protect copper conductors with stiff copper or brass tubing, which enclose the conductors from the top to the bottom of the tubing, between one foot below and seven feet above the finished grade.

F. Sheath copper conductors, which pass over cast stone, cut stone, architectural concrete and masonry surfaces, with not less than a 1/16 inch thickness of lead to prevent staining of the exterior finish surfaces.

G. For the earth connections, install ground rods and ground plates, and the conductor connections to them and the main water pipes in the presence of the owner's representative. For the conductors located outside of the building or stack, install the conductors not less than two feet below the finished grade.

H. For structural steel buildings, connect the steel framework of the buildings to the main water pipe near the water system entrance to the building.

I. Connect exterior metal surfaces, located within three feet of the lightning protection system conductors, to the lightning protection system conductors to prevent flashovers.

J. Grounding: Test the ground resistance to earth by standard methods and conform to the ground resistance requirements specified in Section, GROUNDING.

K. Where shown, use the structural steel framework or reinforcing steel as the main conductor:

1. Weld or bond the non-electrically-continuous sections together and make them electrically continuous.
2. Verify the electrical continuity by measuring the ground resistances to earth at the ground level, at the top of the building or stack, and at intermediate points with a sensitive ohmmeter. Compare the resistance readings.
3. Connect the air terminals together with an exterior conductor connected to the structural steel framework at not more than 60 foot intervals.
4. Install ground connections to earth at not more than 60 foot intervals around the perimeter of the building.
5. Weld or braze bonding plates, not less than eight inches square, to cleaned sections of the steel and connect the conductors to the plates.

6. Do not pierce the structural steel in any manner. Connections to the structural steel shall conform to UL Publication No. 96A.

L. Coordinate with other work, including electrical wiring and roofing work, as necessary to interface installation of lightning protection system with other work.

M. Install conductors with direct paths from air terminals to ground connections avoiding sharp bends and narrow loops. Install arresters as close as practical to equipment which they are to protect.

N. When the lightning protection systems have been installed, have the systems inspected by a UL representative. Obtain and install a UL numbered master label "C" for each of the lightning protection systems at the location directed by the UL representative.

O. Where the drawings show the new lightning protection system connected to an existing lightning protection system without a UL master label, the new portion of the lightning system still requires inspection and labels as specified above for new work.

P. Provide equipment grounding and bonding connections, sufficiently tight to assure permanent and effective grounds and bonds, for lighting protection connection devices as indicated.

END OF SECTION

SECTION 26 43 00 - SURGE PROTECTIVE DEVICES (SPDs)

PART 1 GENERAL

1.1 RELATED DOCUMENTS

A. Drawings and general provisions of Contract, including General and Supplementary Conditions Divisions 00 and 01 Specification sections, apply to work of this Section.

B. The Section is Division 26 Basic Electrical Materials and Methods section, and is a part of each Division 26 section making reference to electrical surge suppression specified herein.

1.2 DESCRIPTION OF WORK

A. The work required under this division shall include all materials, labor, and auxiliaries required to furnish and install complete surge suppression for the protection of building electrical and electronics systems from the effects of line-induced transient voltage surge and lightning discharge, as indicated on drawings or specified in this section.

B. Types of surge suppression specified in this section include the following:

1. Distribution and branch circuit panels.
2. Fire alarm control panel.

1.3 QUALITY ASSURANCE

A. All surge suppression devices shall be manufactured by a company normally engaged in the design, development, and manufacture of such devices for electrical and electronics systems equipment.

B. The surge suppressor manufacturer shall offer technical assistance through support by a factory representative and local stocking distributor.

C. Submittals: Surge suppression submittal shall include:

1. Manufacturer’s performance data on each suppressor type.
2. Dimensioned drawing of each suppressor type.

D. Equipment Certification: Items shall be listed by Underwriters’ Laboratories, shall bear the UL seal, and be marked in accordance with referenced standard.

E. Surge suppression devices shall be installed and located in accordance with requirements of all applicable National Fire Protection Association (NFPA) Codes.

1.4 WARRANTY

A. All surge suppression devices shall be warranted to be free from defects in materials and workmanship under normal use in accordance with the instructions provided for a period of five (5) years.

B. Any suppressor which shows evidence of failure or incorrect operating during the warranty period shall be repaired or replaced by the manufacturer and installer.

1.5 CODES AND STANDARDS

A. The following standards and publications are referenced in various parts of this specification and shall apply:

UL 1449, 3rd Edition	Standard for Safety, Transient Voltage Surge Suppressors.
ANSI/IEEE C62.41 (IEEE 587)	Guide for Surge Voltages in Low-Voltage AC Power Circuits.
ANSI/IEEE C62.33	Standard Test Specifications for Varistor Surge Protection Devices.
ANSI/IEEE C62.45	IEEE Guide for Surge Testing for Equipment Connected to Low-Voltage AC Power Circuits.

1.6 REQUIRED SUPPRESSORS

A. Provide surge suppression for the equipment described herein:

1. On distribution and branch circuit panels as shown in the project drawings.
2. On 120 volt power connections for the fire alarm control panel.
3. On all equipment identified in the project drawings.

PART 2 PRODUCTS

2.1 SUPPRESSORS

A. The surge suppressor manufacturer shall offer a complete line of surge suppression products to support the required suppressors listed in Part 1.

B. The service entrance surge suppressors shall be designed with replaceable modules for purposes of in-service replacement. The unit suppressor shall be designed with redundant back-up surge protection in the event of a module failure.

C. Module status indicators shall be provided to indicate individual module status. When a module has failed, the module LED status indicator shall indicate said failure.

D. Unit status indicators shall be provided to indicate the status of the complete unit suppressor. The LED status indicators shall be located on the hinged front cover to

redundantly indicate module or unit failure. The unit suppressor shall include alarm contacts (one N.O. and one N.C.) for remote annunciation of unit status.

E. Suppressors shall be designed for the specific type and voltage of electrical service and shall provide clamping action for both normal (L-N) and common (L-N-G) mode protection.

F. Service entrance suppressors shall utilize normal and common modes of protection - each phase line to neutral, each phase line to ground and neutral to ground.

G. Distribution and branch circuit panel suppressors shall utilize protection of each phase line to ground and neutral to ground (if neutral conductor present).

H. Suppressors shall be of a hybrid design and include circuitry with tight, wave-tracking clamping characteristics.

I. Suppressors shall be designed to withstand a maximum continuous operating voltage of not less than 115% of nominal RMS line voltage.

J. Suppressors shall utilize internal safety fusing or a UL/IEEE approved method to disconnect the suppressor from the electrical source if the suppressor fails. The suppressor shall be internally protected from fault current damage as a result of a suppressor failure.

K. Each suppressor shall have an internal disconnect switch when not connected to a separate circuit breaker or fused disconnect switch which is dedicated specifically for the suppressor.

L. Suppressors shall be failsafe, shall allow no follow-through current, shall have repeated surge capability, shall be solid state, shall be self-restoring, and shall be fully automatic.

M. Suppressors shall be UL 1449, 3rd Edition listed and shall be approved for the location in which they are installed.

N. Suppressors shall have an operating temperature range of -40°C to +85°C.

2.2 SUPPRESSOR CRITERIA

A. Shall be equivalent to the basis-of-design shown on drawings.

B. Alternate manufacturers: Atlantic Scientific, APT.

PART 3 EXECUTION

3.1 INSTALLATION OF SUPPRESSORS:

A. Suppressors shall be installed as close as practical to the electric panel or electronic equipment to be protected, consistent with available space. Suppressors shall be close nippled to the device being protected in a position near the point of connections, which will minimize lead length between the suppressor connects. Suppressor leads shall not extend

beyond the suppressor manufacturer's recommended maximum lead length without specific approval of the engineer.

B. Suppressors shall be installed in a neat, workmanlike manner. Lead dress shall be as short and as straight as possible and be consistent with recommended industry practices for the system on which these devices are installed.

C. Supplementary grounding and bonding connections required between the bonding bus or ground plane for each equipment cluster and other locations as indicated herein shall be accomplished using #6 AWG core copper conductor and approved connections, unless otherwise noted. Referenced to a common earth ground.

D. Suppressors shall be installed in a manner that allows simple replacement within short periods of downtime.

E. Service entrance and panel type suppressors shall be installed with a means of disconnecting the suppressor. If no dedicated circuit breaker is included in panel, manufacturer shall provide an integral fused disconnect.

F. The surge suppression equipment shall be UL listed and installed per the NEC and the manufacturer's specifications.

END OF SECTION

SECTION 26 51 00 - INTERIOR LIGHTING

PART 1 GENERAL

1.1 SUMMARY

A. Section includes interior luminaires, lamps, ballasts, and accessories.

B. Related Sections:

1. Section 09 58 00 - Integrated Ceiling Assemblies.
2. Section 26 05 00 - Common Work Results for Electrical.
3. Section 26 05 19 - Low-Voltage Electrical Power Conductors and Cables.
4. Section 26 05 26 - Grounding and Bonding for Electrical Systems.
5. Section 26 05 33 - Raceway and Boxes for Electrical Systems.
6. Section 26 27 26 - Wiring Devices
7. Section 26 52 00 - Emergency Lighting.

1.2 REFERENCES - LATEST EDITIONS OF:

A. American National Standards Institute:

ANSI C82.1	American National Standard for Lamp Ballast-Line Frequency Fluorescent Lamp Ballast.
ANSI C82.4	American National Standard for Ballasts-for High-Intensity-Discharge and Low-Pressure Sodium Lamps (Multiple-Supply Type)

B. National Fire Protection Association (NFPA):

70	National Electrical Code (NEC)
101	Life Safety Code

C. National Electrical Manufacturer’s Association (NEMA):

C82.1	Ballasts for Fluorescent Lamps – Specifications
C82.2	Method of Measurement of Fluorescent Lamp Ballasts
C82.4	Ballasts for High-Intensity-Discharge and Low-Pressure Sodium Lamps

D. Underwriters Laboratories, Inc. (UL):

496	Edison-Base Lampholders
542	Lampholders, Starters, and Starter Holders for Fluorescent Lamps

844	Electric Lighting Fixtures for Use in Hazardous (Classified) Locations
924	Emergency Lighting and Power Equipment
935	Fluorescent-Lamp Ballasts
1029	High-Intensity-Discharge Lamp Ballasts
1598	Luminaires

1.3 SUBMITTALS

A. Section 01 33 00 - Submittal Procedures {01330 - Submittal Procedures}: Submittal procedures.

B. Shop Drawings: Indicate dimensions and components for each luminaire not standard product of manufacturer.

C. Product Data: Submit dimensions, ratings, and performance data.

D. Samples: When requested, submit two color chips 3 x 3 inch (75 x 75 mm) in size illustrating luminaire finish color where indicated in luminaire schedule.

E. Product Data: Submit manufacturer's product data and installation instructions on each type building lighting fixture, lamp type and ballast.

F. Shop Drawings: Submit fixture shop drawings in booklet form, with separate sheet for each fixture assembled in "luminaire type" alphabetical or numerical order, with proposed fixture and accessories clearly indicated on each sheet. Submit details indicating compatibility with ceiling grid system.

1. Sufficient information, clearly presented, shall be included to determine compliance with drawings and specifications.

2. Include electrical ratings, dimensions, mounting details, materials, required clearances, terminations, wiring and connection diagrams, photometric data, ballasts, lenses, louvers, lamps, and controls.

1.4 QUALIFICATIONS

A. Manufacturer: Company specializing in manufacturing products specified in this section with minimum three years experience.

PART 2 PRODUCTS

2.1 INTERIOR LUMINAIRES

A. Product Description: Complete interior luminaire assemblies, with features, options, and accessories as scheduled.

B. Refer to Section 01 60 00 - Product Requirements for product options. Substitutions are not permitted.

C. Shall be in accordance with NFPA 70, UL 1598 and shall be as shown on drawings and as specified.

D. Sheet Metal:

1. Shall be formed to prevent warping and sagging. Housing, trim and lens frame shall be true, straight (unless intentionally curved) and parallel to each other as designed.

2. Wireways and fittings shall be free of burrs and sharp edges and shall accommodate internal and branch circuit wiring without damage to the wiring.

3. Where lighting fixtures are detailed with minimum 20 gauge housing, minimum 22 gauge housings will be acceptable provided they have strengthening embossed rib and break formations, which give the equivalent rigidity of a 20 gauge housing.

4. When installed, any exposed fixture housing surface, trim frame, door frame and lens frame shall be free of light leaks; lens doors shall close in a light tight manner.

5. Hinged door closure frames shall operate smoothly without binding when the fixture is in the installed position, and latches shall function easily by finger action without the use of tools.

E. Ballasts shall be serviceable while the fixture is in its normally installed position, and shall not be mounted to removable reflectors or wireway covers unless so specified.

F. Lamp Sockets:

1. Fluorescent: Lampholder contacts shall be the biting edge type or phosphorous-bronze with silver flash contact surface type and shall conform to the applicable requirements of UL 542. Contacts for recessed double contact Lampholders and for slimline Lampholders shall be silver plated. Lampholders for bi-pin lamps, with the exception of those for “U” type lamps, shall be of the telescoping compression type, or of the single slot entry type requiring a one-quarter turn of the lamp after insertion.

G. Fluorescent fixtures with louvers or light transmitting panels shall have hinges, latches and safety catches to facilitate safe, convenient cleaning and relamping. Vapor tight fixtures shall have pressure clamping devices in lieu of the latches.

H. Mechanical Safety: Lighting fixture closures (lens doors, trim frame, hinged housings, etc.) shall be retained in a secure manner by captive hinges or fasteners such that they cannot be accidentally dislodged during normal operation or routine maintenance.

I. Metal Finishes:

1. The manufacturer shall apply his standard finish (unless otherwise specified) over a corrosion resistant primer, after cleaning to free the metal surfaces of rust, grease, dirt and other deposits. Edges of pre-finished sheet metal exposed during forming, stamping or shearing processes shall be finished in a similar corrosion resistant manner to match the adjacent surface (s). Fixture finish shall be free of stains or

evidence of rusting, blistering, or flaking. All metal parts shall be painted after fabrication.

2. Interior light reflecting finishes shall be white with not less than 85 percent reflectance, except where otherwise shown on the drawing.

3. Exterior finishes shall be as shown on the drawings.

J. Provide all lighting fixtures with a specific means for grounding their metallic wireways and housings to an equipment grounding conductor.

K. Light Transmitting Components for Fluorescent Fixtures:

1. Lenses: Plastic lenses where specified for enclosed fluorescent lighting fixtures shall be acrylic and have minimum overall thickness including prism of 0.125 inches.

2. Unless otherwise specified, lenses, diffusers and louvers shall be retained firmly in a metal frame by clips or clamping ring in such a manner as to allow expansion and contraction of the lens without distortion or cracking.

L. Compact fluorescent fixtures shall be manufactured specifically for compact fluorescent lamps with ballasts integral to the fixture. Assemblies designed to retrofit incandescent fixtures are prohibited except when specifically indicated for renovation of existing fixtures. Fixtures shall be designed for lamps as specified.

2.2 FLUORESCENT BALLASTS

A. Ballasts (Electronic):

1. Ballasts for fluorescent lamps shall be high frequency electronic for use with Octic type (265mA) lamps. The total harmonic distortion (%THD) shall be less than 10%. The power factor shall be .95 or higher.

2. Non-dimming electronic ballasts for fluorescent lamps shall be General Electric (Magnetek), Osram Sylvania Quicktronic, Advance or Motorola.

3. All ballasts shall be individually fused on the line side of the ballast.

4. All ballasts shall bear the ETL/CBM and UL labels.

5. Shop drawings shall be submitted for ballast types.

6. Instant start ballast shall be used with non-occupancy sensor controlled luminaries; programmed rapid start ballast shall be used for occupancy sensor controlled luminaries.

2.3 FLUORESCENT DIMMING BALLASTS AND CONTROLS

A. Product Description: Electrical assembly of control unit and ballast to furnish smooth dimming of fluorescent lamps.

B. See Digital - Network Lighting System

2.4 LAMPS

A. Manufacturers:

1. Sylvania.
2. Phillips.
3. G.E.
4. Substitutions: Not Permitted.

B. Lamps: Fluorescent lamps shall be rapid start with a minimum 85 CRI, 4100K, unless otherwise noted on drawings, all lamps shall be 'TCLP' compliant as manufactured by General Electric, Sylvania or Phillips. T-8, U-shaped lamps shall have 6" spacing between ends. Shop drawings shall be submitted for all lamp types.

C. LED: Minimum 50,000 hour expected life, minimum CRI 85, 4000K temperature.

PART 3 EXECUTION

3.1 EXISTING WORK

A. Install lighting fixtures at locations and heights as indicated, in accordance with fixture manufacturer's written instructions, applicable requirements of NEC, NECA's "Standard of Installation", NEMA standards, and with recognized industry practices to ensure that lighting fixtures fulfill requirements.

B. Extend existing interior luminaire installations using materials and methods compatible with existing installations, and as specified.

C. Clean and repair existing interior luminaires to remain or to be reinstalled.

3.2 INSTALLATION

A. Installation shall be in accordance with NEC

B. Install suspended luminaires using pendants supported from swivel hangers. Install pendant length required to suspend luminaire at indicated height.

C. Support luminaires 2 x 4 foot size and larger independent of ceiling framing.

D. Locate recessed ceiling luminaires as indicated on Drawings.

E. Install surface mounted luminaires plumb and adjust to align with building lines and with each other. Secure to prevent movement.

F. Exposed Grid Ceilings: Support surface-mounted luminaires on grid ceiling directly from building structure.

G. Install recessed luminaires to permit removal from below.

H. Install recessed luminaires using accessories and firestopping materials to meet regulatory requirements for fire rating.

I. Install wall-mounted luminaires at height as indicated on Drawings.

J. Install accessories furnished with each luminaire.

K. Connect luminaires to branch circuit outlets provided under Section 26 05 33 using flexible conduit.

L. Make wiring connections to branch circuit using building wire with insulation suitable for temperature conditions within luminaire.

M. Install specified lamps in each luminaire.

N. Ground and bond interior luminaires in accordance with Section 26 05 26.

O. Examination: Examine areas and conditions under which lighting fixtures are to be installed and substrate for supporting lighting fixtures, including architectural elevations and sections. Notify owner in writing of condition detrimental to installation of fixtures or completion of work. Do not proceed with work until unsatisfactory conditions have been corrected in a manner acceptable to installer.

P. Align, mount and level the lighting fixtures uniformly.

Q. Provide fixtures and/or fixture outlet boxes with hangers to properly support fixture weight. Submit design of hangers, method of fastening, other than indicated or specified herein, for review by owner.

R. Install flush-mounted fixtures properly to eliminate light leakage between fixture frame and finished surface.

S. Provide plaster frames for recessed fixtures installed in other than suspended grid type acoustical ceiling systems. Brace frames temporarily to prevent distortion during handling.

T. Fasten fixtures securely to indicate structural supports and ensure that pendant fixtures are plumb and level.

U. Recessed fixtures shall be centered in the ceiling tile, structural pan, or other visually controlling feature, unless otherwise noted on drawings. Fixtures installed in sloped ceilings shall be furnished with manufacturer’s standard adapters for mounting lamps vertical to floor. Verify architectural drawings for applicable notes and details.

V. Lay-in fixtures shall have T-bar clips installed.

W. Tighten connectors and terminals, including screws and bolts, in accordance with equipment manufacturer’s published torque tightening values for equipment connectors.

X. Support surface mounted fixtures greater than two feet (2') in length at a point in addition to the outlet box fixture stud.

Y. Avoid interference with and provide clearance for equipment. Where the indicated locations for the lighting fixtures conflict with the locations for equipment, change the locations for the lighting fixtures by the minimum distances necessary as approved by the owner.

Z. For suspended lighting fixtures, the mounting heights shall provide the clearances between the bottoms of the fixtures and the finished floors as shown on the drawings.

AA. Wall mounted light fixtures shall be attached to the studs in the walls. Attachment to gypsum board only is not acceptable.

BB. Lighting Fixture Supports:

1. Shall provide support for all of the fixtures. Supports may be anchored to channels of the ceiling construction, to the structural slab or to structural members within a partition, or above a suspended ceiling.
2. Shall maintain the fixture positions after cleaning and relamping.
3. Shall support the lighting fixtures without causing the ceiling or partition to deflect.
4. Hardware for recessed fixtures:
   a. Where the suspended ceiling system is supported at the four corners of the fixture opening, hardware devices shall clamp the fixture to the ceiling system structural members, or plaster frame at not less than four points in such a manner as to resist spreading of the support members and safely lock the fixture into the ceiling system.
   b. Where the suspended ceiling system is not supported at the four corners of the fixture opening, hardware devices shall independently support the fixture from the building structure at four points.
5. Hardware for surface mounting fixtures to suspended ceilings:
   a. In addition to being secured to any require outlet box, fixtures shall be bolted to a grid ceiling system at four points spaced near the corners of each fixture. The bolts shall be not less than 1/4 inch secured to channel members attached to and spanning the tops of the ceiling structural grid members. Non-turning studs may be attached to the ceiling structural grid members or spanning channels by special clips designed for the purpose, provided they lock into place and require simple tools for removal.
   b. In addition to being secured to any required outlet box, fixtures shall be bolted to a plaster ceiling at four points spaced near the corners of each fixture. Pre-positioned 1/4 inch studs or threaded plaster inserts secured to ceiling structural members shall be used to bolt the fixtures to the ceiling. In lieu of the above, 1/4 inch toggle bolts may be used on new or existing ceiling provided the plaster and lath can safely support the fixtures without sagging or cracking.

CC. Furnish and install the specified lamps for all lighting fixtures installed and all existing lighting fixtures reinstalled under this project.

DD. Coordinate between the electrical and ceiling trades to ascertain that approved lighting fixtures are furnished in the proper sizes and installed with the proper devices (hangers, clips, trim frames, flanges), to match the ceiling system being installed.

EE. At completion of project, relamp all fixtures which have failed/burned-out lamps. Clean all fixtures, lenses, diffusers and louvers that have accumulated dust/dirt during construction.

FF. Protect installed fixtures for damage during remainder of construction period.

3.3 FIELD QUALITY CONTROL

A. Section [01 40 00 - Quality Requirements] [01 70 00 - Execution and Closeout Requirements]: Operate each luminaire after installation and connection. Inspect for proper connection and operation.

3.4 ADJUSTING

A. Section 01 70 00 - Execution and Closeout Requirements: Testing, adjusting, and balancing.

B. Aim and adjust luminaires as indicated on Drawings or directed by Architect/Engineer.

3.5 CLEANING

A. Section 01 70 00 - Execution and Closeout Requirements: Final Cleaning.

B. Remove dirt and debris from enclosures.

C. Clean photometric control surfaces as recommended by manufacturer.

D. Clean finishes and touch up damage.

3.6 PROTECTION OF FINISHED WORK

A. Section 01 70 00 - Execution and Closeout Requirements: Protecting finished work.

B. Relamp luminaires having failed lamps at Substantial Completion.

END OF SECTION

SECTION 26 51 01 - DIGITAL-NETWORK LIGHTING CONTROL SYSTEMS

PART 1 GENERAL

1.1 SUMMARY

A. Section Includes:

1. Digital-Network Lighting Control System.

B. Related Sections:

1. Section 26 05 00, Common Work Results for Electrical.
2. Section 26 05 26, Grounding and Bonding for Electrical Systems.
3. Section 26 05 34, Equipment Wiring Connections.
4. Section 26 51 00, Interior Lighting Fixtures.
5. Section 26 56 00, Exterior Lighting.

1.2 REFERENCES

A. American National Standards Institute/Institute of Electrical and Electronic Engineers (ANSI/IEEE) (and www.ieee.org)

C62.41-1991 – Recommended Practice for Surge Voltages in Low-Voltage AC Power Circuits.

B. International Electrotechnical Commission.

(IEC) 801-2 Electrostatic Discharge Testing Standard.

C. International Organization for Standardization (ISO)

9001:2000 – Quality Management Systems.

D. National Electrical Manufacturers Association (NEMA)

WD1 (R2005) - General Color Requirements for Wiring Devices.

E. Underwriters Laboratories, Inc. (UL):

1. 489 (2002) - Molded-Case Circuit Breakers, Molded-Case Switches, and Circuit-Breaker Enclosures.
2. 508 (1999) - Standard for Industrial Control Equipment.
3. 924 (2003) - Emergency Lighting and Power Equipment
4. 1472 (1996) - Solid-State Dimming Controls.

1.3 SYSTEM DESCRIPTION

A. This specification requires a complete and comprehensive requirement for a total lighting control system comprised but not limited to lighting control panels, dimming ballasts, controls, conductors, conduits, servers, and environmental sensors. Commissioning shall be included and shall coordinate with the project 3rd party commissioning agent. The system shall be complete and operable in all ways to the owner's satisfaction. The contractor shall provide all documentation and support as needed to the commissioning agent.

B. Lutron is basis of design. Equivalent systems in all respects are allowed subject to owner/engineer review and approval. See below.

C. System includes:

1. Factory assembled switching panels.
2. Low voltage wall stations and control interfaces and sensors.
3. Solid-state high frequency fluorescent dimming ballasts.

1.4 SUBMITTALS

A. Submit under provisions of Section 01 33 23.

B. Specification Conformance Document: Indicate whether the submitted equipment:

1. Meets specification exactly as stated.
2. Meets specification via an alternate means and indicate the specific methodology used.

C. Shop Drawings; include:

1. Schematic (one-line diagram) of system.

D. Product Data: Catalog cut sheets with performance specifications demonstrating compliance with specified requirements.

E. Sequence of Operation to describe how each area operates and how any building wide functionality is described.

1.5 QUALITY ASSURANCE

A. Manufacturer: Minimum 5 years experience in manufacture of lighting management systems.

B. Manufacturer's Quality System: Registered to ISO 9001:2000 Quality Standard, including in-house engineering for product design activities.

C. Lighting control system components:

1. Listed by UL specifically for the required loads. Provide evidence of compliance upon request.

1.6 PROJECT CONDITIONS

A. Do not install equipment until following conditions can be maintained in spaces to receive equipment:

1. Ambient temperature: 0° to 40° C (32° to 104° F).

2. Relative humidity: Maximum 90 percent, non-condensing.

3. Lighting control system must be protected from dust during installation.

1.7 WARRANTY

A. See Division 01 and provide manufacturer's standard parts and labor warranties. Components from the date of system commissioning.

B. For ballasts, see Section 26 51 00.

1.8 SERVICE AND SUPPORT

A. STARTUP AND PROGRAMMING

1. Provide factory certified field service engineer to make minimum of two site visits to ensure proper system installation and operation under following parameters

a. Qualifications for factory certified field service engineer:

1. Minimum experience of 2 years training in the electrical/electronic field.

2. Certified by the equipment manufacturer on the system installed.

B. Tech Support

1. Provide factory direct technical support hotline 24 hours per day, 7 days per week.

PART 2 PRODUCTS

2.1 MANUFACTURERS

A. Acceptable Manufacturer: Lutron Electronics Co., Inc. or subject to compliance and prior approval with specified requirements of this section, one of the following:

B. Substitutions: Under provisions of Division 1.

1. All proposed substitutions (clearly delineated as such) must be submitted in writing for approval. Proposed substitutes must be accompanied by a review of the specification noting compliance on a line-by-line basis.

2. By using pre-approved substitutions, the contractor accepts responsibility and associated costs for all required modifications to circuitry, devices, and wiring. The contractor shall provide complete engineered shop drawings (including power wiring) with deviations for the original design highlighted in an alternate color to the engineer for review and approval prior to rough-in.

2.2 GENERAL

A. Lighting Controls: Ten-year operational life while operating continually at any temperature in an ambient temperature range of 0° C (32°F) to 40° C (104°F) and 90 percent non-condensing relative humidity.

B. Designed and tested to withstand discharges without impairment of performance when subjected to discharges of 15,000 volts per IEC 801-2.

2.3 RELAY PERFORMANCE REQUIREMENTS

A. Electrolytic capacitors to operate at least 20° C below the component manufacturer's maximum temperature rating when device is under fully-loaded conditions in 40° C (104° F) ambient temperature.

B. Load Handling Thyristors (SCRs and triacs), Field Effect Transistors (FETs), and Isolated Gate Bipolar Transistors (IGBTs): The component’s maximum current rating to be at least two times the relay’s rated operating current.

C. Capable of withstanding repetitive inrush current of 50 times operating current without impacting lifetime of relay.

D. Design and test relays to withstand line-side surges without impairment to performance.

1. Panels: Withstand surges without impairment of performance when subjected to surges of 6,000 volts, 3,000 amps per ANSI/IEEE C62.41 and per IEC 61000-4-5 surge requirements.

2. Other power handling devices: Withstand surges without impairment of performance when subjected to surges of 6,000 volts, 200 amps per ANSI/IEEE C62.41.

E. Utilize air gap off to disconnect the load from line supply.

F. Power failure memory and relay recovery:

1. When power is interrupted and subsequently returned, within 3 seconds lights will automatically return to same levels (full on, or off) prior to power interruption.

G. Non-dim circuits to meet the following requirements:

1. Rated life of relay at full load: Minimum 1,000,000 cycles.

2. Load switched in manner that prevents arcing at mechanical contacts when power is applied to and removed from load circuits.

3. Fully rated output continuous duty for inductive, capacitive, and resistive loads.

2.4 POWER PANELS

A. Product: Lutron XP Series.

B. Mechanical:

1. Listed to UL 508 (United States) as industrial control equipment. CSA (Canada) certified, or NOM (Mexico) approved as applicable.

2. Delivered and installed as a UL listed factory assembled panel.
3. Field wiring accessible from front of panel without need to remove components.
4. Panels passively cooled via free-convection, unaided by fans or other means.

C. Electrical:

1. Panels contain branch circuit protection for each input circuit unless the panel is a dedicated feed-through type panel or otherwise indicated on the drawings.
2. Minimum UL listed Short Circuit Current Rating (SCCR) of 35,000A.

D. Lutron XP Softswitch Series Switching Panels:

1. Surface mounted.
2. Rated life of relay: Minimum 1,000,000 cycles.
3. Load switched in manner that prevents arcing at mechanical contacts when power is applied to and removed from load circuits.
4. Fully rated output continuous duty for inductive, capacitive, and resistive loads.

E. LCD Panel Processor

1. System to be password protected.
2. Language selection: English.
3. Integral contact closure inputs.
4. Programming and system operations:
    a. Control stations, control interfaces, and contact closure inputs:
        1. Assign functionality of each control station button or infrared interface.
            a. Select patterns
            b. Select customized pattern
            c. Enable/Disable time clock
            d. Initiate delay to off
            e. Toggle one, some, or all zones
        2. RS232 interface or Ethernet interface
        3. Contact closure output: Momentary or maintained
    b. Time Clock:
        1. Integral astronomical time clock
            a. Geographic location (city or latitude/longitude).
            b. Adjustable date and time format.
            c. Adjustable starting and ending of daylight saving time.
            d. Review and modify time clock schedule to add, copy, modify, and delete events.

2. Overrides:
    a. Set circuit status
    b. Select pattern
    c. Time clock override
    d. Control station overrides
    e. After-hours override

F. Diagnostics and Service:
1. Replacing relay does not require re-programming of system or processor.
2. Relays: Include diagnostic LEDs to verify proper operation and assist in system troubleshooting.
3. Relay panels: Include tiered control scheme for dealing with component failure that minimizes loss of control for occupant.
    a. If lighting control system fails, lights to remain at current level. Panel processor provides local control of lights until system is repaired.
    b. If panel processor fails, lights to remain at current level. Circuit breakers can be used to turn lights off or to full light output, allowing non-dim control of lights until panel processor is repaired.

2.5 LOW-VOLTAGE WALL STATIONS

A. System Wall Stations
1. Allows controls of any devices part of the Lutron System.
2. Electronics:
    a. Use RS485 wiring for low voltage communication.
3. Functionality:
    a. Upon button press, LEDs to immediately illuminate.
    b. LEDs to reflect the true system status. LEDs to remain illuminated if the button press was properly processed or the LEDs turn off if the button press was not processed.
    c. Allow for easy reprogramming without replacing unit.
    d. Replacement of units does not require reprogramming.
4. Color: By architect
5. Visible parts: Exhibit ultraviolet color stability when tested with multiple actinic light sources as defined in ASTM D4674. Provide proof of testing upon request.
6. Provide faceplates with concealed mounting hardware.
7. To help building occupants understand how to use the lighting control system, Architect should provide engraving requirements for all controls. Engraving details should include text size and style.

8. Unlike traditional scene control wall stations, centralized low voltage controls can be programmed so that the buttons can have a variety of functions.

B. One Button Control

1. Toggle on/off for group of fixtures.
2. “Press and Hold” button programming for creating and modifying groups.

2.6 SOURCE QUALITY CONTROL

A. Perform full-function testing on all completed assemblies at end of line. Statistical sampling is not acceptable.

B. Audit burn-in at 40° C (104° F) ambient temperature of dimming assemblies and panels at full load for two hours.

2.7 INSTALL SURGE SUPPRESSION

A. Install surge suppression at each panel and computer as recommended by the manufacturer.

PART 3 EXECUTION

3.1 INSTALLATION

A. Install equipment in accordance with manufacturer’s installation instructions.

B. Provide complete installation of system in accordance with Contract Documents.

C. Provide equipment at locations and in quantities indicated on Drawings. Provide any additional equipment required to provide control intent.

D. Define each relay’s load type, assign each load to a zone, and set control functions.

E. Mount exterior daylight sensors to point due north with constant view of daylight

F. Systems Integration:

1. Equipment Integration Meeting Visit: Contractor to coordinate meeting between owner, architect, engineer, Lighting Control System Manufacturer, Project Commissioning Agent and other related equipment manufacturers to discuss equipment and integration procedures.

3.2 FIELD QUALITY CONTROL

A. Manufacturer Services

1. Aim and Focus Visit

a. Contractor to coordinate on-site meeting with owner, architect, engineer, Project Commissioning Agent, Lighting Control System Manufacturer and Lighting Design

Consultant to make required lighting adjustments to the system for conformance with the Lighting Design Consultant's original design intent.

3.3 CLOSEOUT ACTIVITIES

A. Training Visit

1. Lighting Control System Manufacturer to provide 1day on-site system training to site personnel.

B. Attend LEED commissioning agent on-site walk through to demonstrate system functionality. During this visit, the manufacturer's Field Service Engineer will perform tasks, at the request of the facility representative or Commissioning Agent, such as to demonstrate wall control functions, explain timeclock schedules or describe occupancy and/or daylight sensor functionality.

C. On-site Walkthrough (LSC-WALK)

1. Lighting Control System Manufacturer to provide a factory certified Field Service Engineer to demonstrate system functionality to the Commissioning Agent.

END OF SECTION