The Enclosed Document Is Provided For Your Convenience.

Please Email ALL Questions:

MailTo:ContractAdministration@TampaGov.net

Please Let Us Know If You Plan To Bid

City of Tampa
Contract Administration Department
306 E. Jackson St. #280A4N
Tampa, FL 33602
(813)274-8456

CITY OF
TAMPA, FLORIDA

NOTICE TO BIDDERS, INSTRUCTIONS TO BIDDERS
PROPOSAL, BID BOND, FORM OF NOTICE OF AWARD,
AGREEMENT, PERFORMANCE BOND AND
SPECIFICATIONS

FOR

Contract 15-C-00046

FURNISH AND INSTALL MISCELLANEOUS WATER & STORMWATER MAINS 2"-48" DIAMETER - FY16

City of Tampa
CONTRACT ADMINISTRATION DEPARTMENT
TAMPA MUNICIPAL OFFICE BUILDING
306 E. JACKSON STREET - 4TH FLOOR NORTH
TAMPA, FLORIDA 33602

JUNE 2015

CITY OF TAMPA
CONTRACT ADMINISTRATION DEPARTMENT
306 E. Jackson Street 280A4N
Tampa, FL 33602

****

BID NOTICE MEMO
****

Bids will be received no later than 1:30 p.m. on the indicated Date(s) for the following Project(s):
****

CONTRACT NO.: 15-C-00046; Furnish and Install Miscellaneous Water & Stormwater Mains 2"-48" Diameter – FY16
BID DATE: July 14, 2015 ESTIMATE: $25,000,000 SCOPE: The project comprises furnishing and installing water mains and appurtenances for water mains ranging in size from 2" to 48" in diameter including concrete masonry, curbs and sidewalks; paving, landscaping, grouting, brick street construction, miscellaneous stormwater work, and all associated work required for a complete project in accordance with the Contract Documents PRE-BID CONFERENCE: Tuesday, June 30, 2015, 2:30p.m. Attendance is not mandatory, but recommended.
****

Bids will be opened in the 4th Floor Conference Room, Tampa Municipal Office Building, 306 E. Jackson Street, Tampa, Florida 33602. Pre-Bid Conference is held at the same location unless otherwise indicated. Plans and Specifications and Addenda for this work may be examined at, and downloaded from, www.demandstar.com. Backup files are available at http://www.tampagov.net/contract-administration/programs/construction-project-bidding. Subcontracting opportunities may exist for City certified Small Local Business Enterprises (SLBEs). A copy of the current SLBE directory may be obtained at www.Tampagov.net. Phone (813) 274-8456 for assistance. Email Technical Questions to: contractadministration@tampagov.net .

TABLE OF CONTENTS

BIDDING REQUIREMENTS

Notice to Bidders N-1
Instructions to Bidders ..... I-1a thru I-4
Insurance Requirements ..... INS-1 thru INS-2
SLBE Goal Setting List GS-1
Goal Setting List Instructions GSL-1
Sample Solicitation Letter SL-1

BID FORMS

Proposal ..... P-1 thru P-31
Good Faith Efforts Compliance Plan ..... GFECP
SLBE Solicited ..... DMI – Solicited
SLBE Utilized ..... DMI – Utilized
Bid Bond BB-1

CONTRACT FORMS

Agreement ..... A-1 thru A-15
Public Construction Bond ..... PB-1 thru PB-3

GENERAL PROVISIONS

General Provisions ..... G-1 thru G-10
Subcontractors Payment Form ..... DMI - Payments
Project Sign ..... Sign-1 thru Sign-2

SCHEDULE A - SPECIFIC PROVISIONS FOR WATER

S-1.01 GENERAL SP-1
S-2.01 DEFINITIONS SP-1
S-3.01 APPLICABLE CODES OR STANDARDS SP-1
S-4.01 PERIOD OF CONTRACT SP-2
S-4.02 BASIS OF AWARD/CONTRACT PRICE SP-2
S-4.03 TIME PROVISIONS – MAJOR PROJECTS SP-3
S-4.04 TIME PROVISIONS – MINOR PROJECTS SP-4
S-4.05 EXTRA WORK SP-4
S-4.06 AVAILABLE RESOURCES SP-4
S-5.01 LICENSES AND PERMITS SP-4
S-6.01 LIQUIDATED DAMAGES SP-5
S-7.01 WORK DIRECTIVE CHANGE SP-6
S-8.01 ORDER AND TIME OF WORK SP-6
S-9.01 DEFECTIVE MATERIALS SP-6
S-10.01 WORK PERFORMED ON SATURDAYS, SUNDAYS, LEGAL HOLIDAYS, OR AFTER REGULAR WORKING HOURS SP-7
S-11.01 COMMENCEMENT OF WORK SP-7

S-12.01 PARTIAL PAYMENTS SP-8
S-13.01 PUBLIC CONSTRUCTION BOND SP-8
S-14.01 LAYOUT DATA SP-8
S-15.01 CONFLICTS WITH PROPOSED WORK SP-9
S-15.02 EXISTING UTILITIES SP-9
S-16.01 TEMPORARY FACILITIES AND CONTROLS SP-9
S-17.01 MAINTENANCE AND RESTORATION OF JOB SITE SP-11
S-18.01 CONTRACTOR’S SCHEDULE SP-12
S-19.01 USE OF EXPLOSIVES SP-12
S-20.01 SANITARY HOUSE CONNECTION CONFLICTS SP-12
S-21.01 STREET AND TRAFFIC SIGNS SP-12
S-22.01 GRADES AND DRAINAGE AT STREET INTERSECTIONS SP-13
S-23.01 LINES AND GRADES OF WATER MAIN INSTALLATION SP-13
S-24.01 NOTICE AND SERVICE THEREOF SP-13
S-25.01 REQUIREMENTS FOR CONTROL OF THE WORK SP-14
S-26.01 ENVIRONMENTAL PROTECTION SP-15
S-27.01 USE OF PRIVATE PROPERTY SP-15
S-28.01 TREE REMOVAL SP-16
S-29.01 STANDARD DETAILS SP-16
S-30.01 MAINTENANCE OF CONTINUOUS WATER SERVICE SP-16
S-31.01 SHUTDOWNS SP-16
S-32.01 GUARANTEES, WARRANTIES, BONDS SP-17
S-33.01 WORKER SAFETY SP-17
S-34.01 ASBESTOS REMOVAL SP-17
S-35.01 PROJECT SIGN SP-18
S-36.01 CONTRACTOR’S PRESENCE SP-18
S-37.01 FIELD OFFICE SP-18
S-38.01 TEMPORARY FENCING SP-18
S-38.02 PERMANENT FENCE RESTORATION SP-18
S-39.01 VALVE OPERATION ON NEW WATER MAIN SP-19

SCHEDULE B – SPECIFIC PROVISIONS FOR STORMWATER
SP-1.00 PREVENTION CONTROL AND ABATEMENT OF EROSION ANE WATER POLLUTION SP-20
SP-2.00 EXISTING STORM SEWERAGE FACILITIES SP-21
SP-3.00 INSPECTION OF REINFORCED CONCRETE PIPE SP-22
SP-4.00 ELLIPTICAL CONCRETE PIPE AND ROUND CONCRETE PIPE JOINTS SP-23
SP-5.00 CONCRETE REQUIREMENTS SP-23
SP-6.00 STANDARD FOR FILTER FABRIC SP-24
SP-7.00 MEASUREMENT FOR PAYMENT SP-24
SP-8.00 TEMPORARY BULKHEADS SP-24
SP-9.00 STORMWATER PIPE TV INSPECTION SP-24
SP-10.00 RECONSTRUCTION OF SWALES/DITCHES OR LOW LYING AREAS SP-25
SP-11.00 CASTINGS IDENTIFICATION SP-25
SP-12.00 RUBBLE RIPRAP SP-25

SCHEDULE A – WATER CONTRACT PAY ITEMS FOR MAJOR PROJECTS
C1.00 GENERAL CP-1
C2.00 PIPELINE INSTALLATION CP-3

C2.10 Ductile Iron and PVC Pipe CP-3
C2.20 F&I HDPE Pipe by Horizontal Directional Drilling CP-6
C2.30 Temporary Service Lines CP-8
C2.40 Casing Installation CP-9
C2.50 Removal and Abandonment of Pipe CP-10
C2.60 Cutting and Plugging CP-11
C2.70 Pipe Incidentals CP-11
C2.80 Incidental Tapped Connections CP-12
C3.00 Thrust Restraint CP-13
C4.00 Fittings CP-15
C5.00 Fire Hydrants CP-17
C5.10 Protection Post CP-18
C5.20 Fire Hydrants (Removal of Existing) CP-19
C6.00 Valves CP-19
C6.10 Line Stops CP-21
C6.20 Insertion Valves CP 22
C7.00 Taps CP-22
C8.00 Water Meter and Fireline Service Installation CP-23
C8.10 Water Meter Metered Services Two-Inch and Less with Pipe Work CP-23
C8.20 Raising Existing Meters in Existing Meter Boxes CP-25
C8.30 Service Installations 3-Inch and Larger CP-26
C8.40 Vaults and Auxiliary Above-Ground Materials CP-27
C9.00 Restoration and Miscellaneous Incidental Items CP-29
C9.10 General CP-29
C9.20 Pavement CP-29
C9.30 Roadside Restoration CP-32
C9.40 Grouting Abandoned Pipe CP-33
C9.50 Incidentals CP-34
C9.60 Removal and Demolition of Large Service Vaults and Concrete Slabs CP-35
C9.70 Rock and Muck Removal CP-36
C9.80 Tree Removal, Planting and Protection CP-36
C9.90 Exploratory Pits CP-37
C9.91 Valve Box, Vault and Manhole Adjustment or Removal CP-38
C9.92 Miscellaneous Incidentals CP-39
C9.93 Concrete Block Thrust Restraint CP-40
C9.94 Asbestos Concrete Pipe CP-40
C9.95 Project Sign CP-41
C9.96 Separate Mobilization CP-42
C9.97 Supplemental Survey Layout CP-42
C9.98 Owner Contingency Allowance CP-42
C9.99 Crew-Day Allowance CP-43
C10.00 Performance Bond Allowance CP-43

SCHEDULE B – STORMWATER CONTRACT PAY ITEMS
SW100 Stormwater Contingency CP-45
SW120 Ditch Excavation/Regrade/Misc Grading CP-45
SW125 Regular Excavation CP-45
SW350 Concrete Flume CP-46
SW425 Stormwater Inlets, Manholes and Junction Boxes CP-47

SW430 Pipe Culverts and Storm Sewers CP-48
SW435 Connect Existing Stormwater to Structure CP-49
SW530 Riprap (Rubble) CP-49

SCHEDULE C – WATER CONTRACT PAY ITEMS FOR MINOR PROJECTS
CM1.00 General CP-51
CM5.00 Fire Hydrants: New Installation, or Replacement – Minor Projects CP-53
CM5.20 Fire Hydrants: Removal Only – Minor Projects CP-55
CM6.00 Valves: Install In-Line into Existing Water Mains – Minor Projects CP-57
CM8.00 Water Meter & Small Fire Line Service Installation – Minor Projects CP-59
CM8.20 Metered Services Two-Inch and Less – Minor Projects CP-59
CM9.00 Restoration – Minor Projects CP-61
CM9.10 General CP-61
CM9.20 Pavement Restoration – Minor Projects CP-62
CM9.30 Roadside Restoration – Minor Projects CP-64

TECHNICAL SPECIFICATIONS - WATER
T1.00 General Requirements TS-1
T1.01 Summary of Work TS-1
T1.02 Coordination TS-2
T1.03 Field Engineering TS-4
T1.04 Abbreviations and Symbols TS-4
T1.05 Submittals, Shop Drawings, Product Data and Samples TS-5
T1.06 Quality Control TS-6
T1.07 Materials and Equipment TS-6
T1.08 Cleaning and Restoring TS-8
T1.09 Preconstruction Photography TS-8
T2.00 Construction of Water Mains and Appurtenances TS-10
T2.01 Subsurface Investigation TS-10
T2.02 Site Preparation TS-11
T2.03 Dewatering TS-13
T2.04 Trenching, Backfilling and Compacting TS-13
T2.05 Pipeline Installation TS-15
T2.06 Casing Installation TS-34
T2.07 Fittings TS-35
T2.08 Valves TS-37
T2.09 Taps TS-37
T2.10 Hydrants TS-38
T2.11 Meter and Fire Service Connections TS-38
T3.00 Testing TS-39
T3.01 Hydrostatic Testing TS-39
T3.02 Disinfection TS-41
T4.00 Restoration TS-43
T4.01 Waste Material Disposal TS-43
T4.02 Repair and Resurfacing TS-43
T4.03 Pavement Marking TS-44
T4.04 Street Signs, Traffic Signs and Informational Signs TS-45
T4.05 Seeding TS-45

T4.06 Sodding TS-45

T4.07 Pavement/Right of Way Restoration Requirements – Rev-2009 TS-46
Section 1 Pavement Restoration Specifications TS-46
Section 2 Pavement Restoration Procedures TS-48
T4.08 Vitrified Brick Replacement (Revised 4/27/2009) TS-51

TECHNICAL (AND MATERIAL) SPECIFICATIONS – STORMWATER TS-54
SECTION 425 STORMWATER INLETS, MANHOLES AND JUNCTION BOXES TS-54
W-425.01 GENERAL
W-425.02 COMPOSITION AND PROORTIONING
W-425.03 GRATINGS TS-55
W-425.04 FORMS
W-425.05 PRECAST INLETS, MANHOLES AND JUNCTION BOXES
W-425.06 CONSTRUCTION METHODS TS-56
W-425.07 DRAINAGE STRUCTURES TS-57
SECTION 430 – PIPE CULVERTS AND STORM SEWERS TS-61
W-430.01 GENERAL
W-430.02 LAYING PIPE
W-430.03 REMOVING AND RELAYING EXISTING PIPE TS-63
W-430.04 PLACING PIPE UNDER RAILROAD
W-430.05 SPECIFIC REQUIREMENTS FOR CONCRETE PIPE TS-64
W-430.06 FIELD JOINTS FOR ALUMINUM PIPE TS-67
W-430.07 JOINTS IN CAST IRON PIPE TS-67

SCHEDULE A – WATER MATERIAL SPECIFICATIONS
GENERAL REQUIREMENTS MS-1
POLYETHYLENE MS-2
CASING SPACERS MS-2
PRE-CAST THRUST BLOCKS MS-3
TRANSITION COUPLINGS (2" - 12") MS-4
BRASS FITTINGS MS-5
THREADED BRASS FITTINGS MS-7
SERVICE SADDLES MS-8
BLOW-OFF ASSEMBLY MS-10
AIR RELEASE VALVES MS-11
VAULT SLABS AND COVERS MS-12
WATER METER BOXES AND COVERS MS-13
RESTRAINT DEVICES for DUCTILE IRON PIPE MS-16
DUCTILE IRON PIPE MS-18
DUCTILE IRON PIPE- FLANGED MS-21
HIGH DENSITY POLYETHYLENE PIPE (HDPE) MS-22
HDPE TUBING MS-23
PVC (Polyvinyl Chloride) WATER PIPE MS-24
GATE AND TAPPING VALVES, RESILIENT SEAT MS-26
2” GATE VALVE, RESILIENT SEAT MS-29

GATE VALVE W/HANDWHEEL, RS, FL (4” & LARGER)	MS-29
BUTTERFLY VALVE	MS-31
INSERTION VALVES	MS-32
VALVE BOXES (Class 35 Grey)	MS-34
COMPACT ANCHOR FITTINGS – DUCTILE IRON	MS-35
COMPACT MECHANICAL JOINT FITTINGS – DUCTILE IRON	MS-36
FLANGED FITTINGS (Standard Class 125)	MS-37
OFFSETS (4”-12”, Ductile Iron, Mechanical Joint)	MS-38
MECHANICAL JOINT BOLTS-AND-NUTS	MS-39
SOLID SLEEVES	MS-40
DRY BARREL FIRE HYDRANTS	MS-41
ELECTROFUSION CORPORATION SADDLES	MS-44
ELECTROFUSION TAPPING TEES	MS-45
ELECTROFUSION SOLID COUPLINGS	MS-46
HDPE-MECHANICAL JOINT ADAPTERS	MS-46
TAPPING SLEEVES (Mechanical Joint)	MS-47
TAPPING SLEEVES (Steel “O-ring” Type	MS-49
LINE STOPS	MS-49
TAPPING SADDLES	MS-51
ASPHALTIC CONCRETE	MS-52
BASE MATERIAL	MS-52

SCHEDULE A – WATER STANDARD DETAILS

Standard Details for Restoration w/in Roadway (Asphalt Removed and Replaced)
Standard Details for Restoration w/in Roadway (Concrete Removed and Replaced)

2.01 TRENCHING, BEDDING AND BACKFILL FOR NON-PERVIOUS (paved) AREAS
2.02 TRENCHING, BEDDING AND BACKFILL FOR PERVIOUS (non-paved) AREAS
2.03 JACKING AND BORING FOR PAVEMENT CROSSING
2.04 JACKING AND BORING FOR RAILROAD CROSSING
2.05 POLYETHYLENE ENCASEMENT INSTALLATION DETAIL
2.06 REINFORCED CONCRETE SHOCK PAD (FOR COVER LESS THAN 2.5’)
2.07 THRUST BLOCKS FOR BENDS
2.08 THRUST BLOCKS FOR PLUGS
2.09 THRUST BLOCKS FOR TEES
2.10 PRECAST CONCRETE THRUST BLOCK
2.11 RESTRAINED JOINT STANDARD FOR BENDS, PLUGS, AND CAPS
2.12 RESTRAINED JOINT STANDARD FOR TEES AND REDUCERS
2.12A DEADMAN THRUST BLOCK
2.13 “TAPPED” CONNECTION FROM DI, CI OR PVC TO <4” MAINS
2.14 AUTOMATIC AIR RELEASE VALVE
2.15 PEDISTAL FOR AUTOMATIC AIR RELEASE VALVE
2.16 BLOW-OFF VALVE ASSEMBLY W/2” PVC OR HDPE PIPE
2.17 BLOW-OFF VALVE ASSEMBLY FOR ≥4” MAINS W/DI, CI, OR PVC PIPE
2.18 TEMPORARY SAMPLE TAP INSTALLATION W/DI, CI, OR PVC PIPE
2.19 TEMPORARY SAMPLE TAP INSTALLATION FOR END OF LINE W/DI, CI, OR PVC PIPE
3.01 VALVE INSTALLATION W/VALVE BOX & PAD FOR DI OR CI PIPE
3.02 VALVE INSTALLATION W/VALVE BOX & PAD FOR PLASTIC PIPE
3.03 BUTTERFLY VALVE INSTALLATION W VALVE BOX & PAD

3.04 VALVE BOX, SLIP-TYPE
3.05 VALVE BOX ADJUSTMENTS FOR GRADE CHANGE
4.01 FIRE HYDRANT INSTALLATION
4.02 FIRE HYDRANT METHODS OF INSTALLATION
5.01 TAPPING DETAIL FOR ¾”, 1”, 1.5” & 2” SERVICE W/DI, CI, OR PVC PIPE
5.02 SINGLE METER DETAIL (3/4”, 1”, 1.5” & 2”)
5.03 DUAL METER SET DETAIL (3/4” & 1”)
5.04 SINGLE & DUAL METERED SERVICE, SHORT-SIDE (3/4”, 1”, 1.5”& 2”)
5.05 SINGLE & DUAL METERED SERVICE, LONG-SIDE (3/4”, 1”, 1.5”& 2”)
5.09 2” DOUBLE DETECTOR CHECK VALVE ASSEMBLY IN METER BOX
5.10 ¾” or 1” SINGLE SERVICE HDPE METER BOX W/METAL COVER
5.10A ¾” or 1” SINGLE SERVICE HDPE METER BOX W/PLASTIC COVER
5.11 ¾” or 1” SINGLE SERVICE HDPE METER BOX W/METAL COVER
5.11A ¾” or 1” DUAL SERVICE HDPE METER BOX W/PLASTIC COVER
5.12 1.5” or 2” DUAL SERVICE HDPE METER BOX W/METAL COVER
6.01 ABOVE GROUND TURBINE METER WITH STRAINER
6.02 ABOVE GROUND DOUBLE DETECTOR CHECK VALVE ASSEMBLY
6.02B ABOVE GROUND DOUBLE DETECTOR CHECK VALVE ASSEMBLY AND TURBINE METER W/STRAINER
6.03 PIPE SUPPORTS FOR ABOVE GROUND DDCV ASSEMBLY
6.04 TURBINE METER IN VAULT
6.05 DOUBLE DETECTOR CHECK VALVE ASSEMBLY IN VAULT
6.06 DOUBLE DETECTOR CHECK VALVE ASSEMBLY W/≥3” DOMESTIC METER IN VAULT
6.07 VAULT CONSRUCTION DETAIL FOR DDCVA AND/OR TURBINE METERS
6.08 VAULT CONCRETE SLAB DETAIL FOR DDCVA AND/OR TURBINE METERS
6.09 TURBINE METER W STRAINER IN AVOVE GROUND VAULT
6.10 DOUBLE DETECTOR CHECK VALVE ASSEMBLY IN ABOVE GROUND VAULT
6.11 FIRE LINE SERVICE W ≥3” DOMESTIC METER IN ABOVE GROUND VAULT
6.12 ABOVE GROUND VAULT CROSS-SECTION
6.13 2” BY-PASS LINE
7.01 PIPE BEDDING AND TRENCH FOR PVC PIPE
7.02 COUBLE COPPER TRACER WIRE ON PVC PIPE
8.01 HDPE PIPE TO MJ FITTING TRANSITION
8.02 HDPE PIPE TO DIP/PVCP SPIGOT-TO-SPIGOT CONNECTION
8.03 “TAPPED” CONNECTION FOR <4” WATER MAIN TO HDPE WATER MAIN
8.04 BLOW-OFF VALVE ASSEMBLY ON ≥4” HDPE PIPE
8.05 TEMPORARY SAMPLE TAP INSTALLATION W/HDPE PIPE
8.06 TEORARY SAMPLE TAP INSTALLATION FOR END-OF-LINE W/HDPE
8.07 VALVE SETTING W/HDPE PIPE
8.08 TAPPING DETAIL FOR 1” & 2” SERVICE W/HDPE PIPE
8.09 SINGLE & DUAL METERED SERVICE, SHORT-SIDE (3/4”, 1”, 1.5”& 2”) W/HDPE PIPE
8.10 SINGLE & DUAL METERED SERVICE, LONG-SIDE (3/4”, 1”, 1.5”& 2”) W/HDPE PIPE
9.01 CITY OF TAMPA PROJECT SIGN

SCHEDULE B – STORMWATER STANDARD DETAILS

Cover Sheet 1
Index and General Notes Sheet 2
Type 1 Inlet Sheet 3

Type 2 Inlet	Sheet 5
Type 3 Inlet	Sheet 8
Type 1 Inlet Modified	Sheet 11
Type BS-1 Curb Inlet	Sheet 12
Type BV-1 Curb Inlet	Sheet 14
Type BR-2 Curb Inlet	Sheet 16
Type BR-1 Curb Inlet	Sheet 18
Standard Inlet Details	Sheet 20
Type “T” & “E” Grate Inlet	Sheet 21
Type “H” Grate Inlet	Sheet 22
Guidelines for Conflict Manholes	Sheet 23
Miscellaneous Details (Pipe Joints & Jackets)	Sheet 24
Miscellaneous Details (Collars & End Guards)	Sheet 25
Open Bottom Inlet (Type “E”)	Sheet 26
Temporary Force Main & Pumping Standards	Sheet 27
Miscellaneous Details - Manhole Castings, Etc.	Sheet 28
Pipe Bedding Details	Sheet 29
Payment Limits & Jacked Crossing Details	Sheet 30

NOTICE TO BIDDERS
CITY OF TAMPA, FLORIDA
Contract 15-C-00046; Furnish and Install Miscellaneous Water & Stormwater Mains 2"-48" Diameter - FY16

Sealed Proposals will be received by the City of Tampa no later than 1:30 P.M., July 14, 2015, in the 4th Floor Conference Room, Tampa Municipal Office Building, 306 E. Jackson Street, Tampa, Florida, there to be publicly opened and read aloud.

The proposed work is to include, but not be limited to, furnishing and installing water mains and appurtenances for water mains ranging in size from 2" to 48" in diameter including concrete masonry, curbs and sidewalks; paving, landscaping, grouting, brick street construction, miscellaneous stormwater work with all associated work required for a complete project in accordance with the Contract Documents.

The Instructions to Bidders, Proposal, Form of Bid Bond, Agreement, Form of Public Construction Bond, Specifications, Plans and other Contract Documents are posted at DemandStar.com. Backup files may be downloaded from http://www.tampagov.net/contract-administration/programs/construction-project-bidding. One set may be available for reference at the office of the Contract Administration Department, Municipal Office Building, Fourth Floor North, City Hall Plaza, Tampa, Florida 33602.

Each Proposal must be submitted on the Proposal form included in the Specifications and must be accompanied by a certified check or cashier's check on a solvent bank or trust company in compliance with Section 255.051, Florida Statutes, made payable to the City of Tampa, in an amount of not less than five per cent of the total bid, or a Bid Bond, of like amount, on the form set forth in the Contract Documents, as a guarantee that, if the Proposal is accepted, the Bidder will execute the Proposed Contract and furnish a Public Construction Bond within twenty (20) days after receipt of Notice of Award of Contract.

The City of Tampa reserves the right to reject any or all Bids and to waive any informalities in the Bid and/or Bid Bond. Acceptance or rejection of Proposals will be made as soon as practicable after the Proposals are received, but the City reserves the right to hold Proposals for ninety (90) days from the date of Opening.

Bid Protest Procedures: Unless subsequently indicated otherwise, in a revised posting on the Department's web page for Construction Project Bidding, the City of Tampa intends to award the referenced project to the lowest bidder listed in the tabulation posted on or about the date of Bid Opening. A bidder aggrieved by this decision may file a protest not later than 4:30 P.M., five (5) business days from the first posting thereof, pursuant to City of Tampa Code Chapter 2, Article V, Division 3, Section 2-282, Procurement Protest Procedures. Protests not conforming therewith shall not be reviewed.

Communication with City Staff

Pursuant to City of Tampa Ordinance 2010-92, during the solicitation period, including any protest and/or appeal, NO CONTACT initiated by bidders or responders with City officers or employees, other than the individuals specified below is permitted:
Director of Contract Administration, David Vaughn
Contracts Management Supervisor, Jim Greiner
Contract Officer, Jody Gray
The City's Legal Department staff
The City's Contract Administration Department staff.
Technical Questions and Requests For Information should be directed to the Department via
ContractAdministration@tampagov.net

"A person or affiliate who has been placed on the convicted vendor list following a conviction for a public entity crime may not submit a bid on a contract to provide any goods or services to a public entity, may not submit a bid on a contract with a public entity for the construction or repair of a public building or public work, may not submit bids on leases of real property to a public entity, may not be awarded or perform work as a contractor, supplier, subcontractor, or consultant under a contract with any public entity, and may not transact business with any public entity in excess of the threshold amount provided in Section 287.017, for CATEGORY TWO for a period of 36 months from the date of being placed on the convicted vendor list." Refer to Section 287.133 Florida Statues.

In accordance with the City of Tampa's Equal Business Opportunity Ordinance, a Goal may have been established for subcontracting with Small Local Business Enterprises, SLBEs, certified by the City. Links to further information and a list of SLBEs are on the Department's Construction Project Bidding Web page. A link to the current complete directory of SLBEs is on the Minority Business Development Office Website.

INSTRUCTIONS TO BIDDERS
SECTION 1 - SPECIAL INSTRUCTIONS

I-1.01 GENERAL:

The proposed work is the Furnish and Install Miscellaneous Water & Stormwater Mains 2"-48" Diameter - FY16 in the City of Tampa, as required for a complete project, as shown on the plans and detailed in the specifications. The work is located on land owned or controlled by the City of Tampa.

I-1.02 FORM PREPARATION AND PRESENTATION OF PROPOSALS: Replace the second sentence with the following: Submission of the entire specification book is not required.

I-1.03 ADDENDA – Section I-2.03 is replaced with the following: No interpretation of the meaning of the Plans, Specifications, or other Contract Documents will be made to any Bidder orally.

Every request for such interpretation must be in writing, addressed to the City of Tampa, Contract Administration Department, 306 E. Jackson St., 4th Floor, Tampa, Florida 33602 and then emailed to ContractAdministration@tampagov.net. To be given consideration, such request must be received at least seven (7) days prior to the date fixed for the opening of the Proposals. Any and all such interpretations and any supplemental instructions will be in the form of written addenda which, if issued, will be posted on DemandStar.Com and on the Department's web page, with notice given to all prospective bidders at the respective fax numbers or e-mail addresses furnished, for such purposes. Failure of any Bidder to receive any such addenda shall not relieve said Bidder from any obligation under his Proposal as submitted. All addenda so issued shall become part of the Contract Documents.

I-1.04 SIGNATURE OF BIDDERS: Section I-2.07 is replaced with the following:

Proposals must be signed in ink by the Bidder with signature in full. When firm is a Bidder, the Proposal shall be signed in the name of the firm by one or more partners. When a corporation is a bidder the officer signing shall set out the corporate name in full beneath which he shall sign his name and give the title of his office. The Proposal shall also bear the seal of the corporation attested by its secretary.

If the bidder referred to in Section I-2.07 is a corporation, it must submit; upon request, a copy of its filed Articles of Incorporation. In addition, if the bidder was incorporated in another state, it must establish that it is authorized to do business in the State of Florida. If the bidder is using a fictitious name, it must submit upon request, proof of registration of such name with the Clerk of the Circuit Court of the Country where its principal place of business is. Failure to submit what is required is grounds to reject the bid of that bidder.

I-1.05 TIME FOR COMPLETION:

The work shall be arranged to be completed in accordance with a progress schedule approved by the Construction Engineer.

The time for completion of this project, referred in Article 4.01 of the Agreement, shall be 365 consecutive calendar days. The period for performance shall start from the date indicated in the Notice To Proceed.

I-1.06 LIQUIDATED DAMAGES:

The amount of liquidated damages, referred to in Article 4.06 of the Agreement, for completion of this project shall be $500.00 per calendar day.

I-1.07 BASIS OF AWARD OF CONTRACT:

The basis of award referred to in Item I-2.11 of Instructions to Bidders shall be the greatest amount of work, which can be accomplished within the funds available as budgeted. The award may be made on the basis of the total bid, base bid, alternates(s) if any, unit bids if any, or any combination thereof deemed to be in the best interest of the City.

INSTRUCTIONS TO BIDDERS
SECTION 1 - SPECIAL INSTRUCTIONS

Unless all bids are rejected, the award will be made within 90 days after opening proposals.

I-1.08 GROUND BREAKING CEREMONY:

Arrangement may be made by the City in coordination with the Contractor, for construction to commence with a Ground Breaking Ceremony. Details will be discussed at the pre-construction conference.

I-1.09 INSURANCE:

The insurance required for this project shall be as indicated on Pages beginning with INS-1. Before commencing work, the Contractor shall provide the evidence of the insurance required on a Certificate of Insurance accompanied by evidence of authority to bind the insurance company or companies such as agents license, power of attorney, or letter of authority.

I-1.10 EQUAL BUSINESS OPPORTUNITY PROGRAM / SLBE / REQUIREMENTS

In accordance with the City of Tampa's Equal Business Opportunity Program, a goal of 17.7% has been established for subcontracting with Small Local Business Enterprises, (SLBEs), certified by the City. The goal is based upon the availability of the firms listed on the Subcontract Goal Contract List included herein.

BIDDERS MUST SOLICIT ALL SLBEs ON THAT LIST and provide documentation of emails, faxes, phone calls, letters, or other communication with the firms as a first step to demonstrate Good Faith Efforts to achieve the goal. The list is formatted to facilitate e-mail solicitations to the listed firms by copying and pasting e-mail addresses.

Bidders may explore other opportunities for subcontracting with SLBEs by consulting the current directory of all certified SLBEs posted on the Minority Business Development Office web page.

GOOD FAITH EFFORT COMPLIANCE PLAN REQUIRED - When a Goal has been established, the Bidder must submit, with its bid, completed to the fullest extent possible, a Good Faith Effort Compliance Plan using the form GFECP contained herein. Additional documentation is required whenever an SLBE subcontractor's low quote is not utilized. Supplemental information or documentation concerning the Bidder's Compliance Plan may be required prior to award as requested by the City.

DIVERSITY MANAGEMENT INITIATIVE, DMI, DATA REPORTING FORMS REQUIRED - Bidders must submit, with its bid, "DMI-Solicited" forms listing all subcontractors solicited and "DMI-Utilized" forms listing all subcontractors to be utilized. Supplemental forms, documentation, or information may be submitted at bid time or as requested by the City.

After an award, "DMI-Payments" forms are to be submitted with payment requests to report payments to subcontractors.

Bidders may visit the Minority Business Development Office's web page at TampaGov.net for other information about the SLBE program, FAQ's, and the latest SLBE directory of certified firms.

I-1.11 BID SECURITY:

Surety companies shall have a rating of not less than B+ Class VI as evaluated in the most recently circulated Best Key rating Guide Property-Liability.

INSTRUCTIONS TO BIDDERS
SECTION 1 - SPECIAL INSTRUCTIONS

I-1.12 PUBLIC CONSTRUCTION BOND:

The Bidder who is awarded the Contract will be required to furnish a Public Construction Bond upon the form provided herein, equal to 100 percent of the Contract price, such Bond to be issued and executed by (a) surety company(ies) acceptable to the City of Tampa and licensed to underwrite contracts in the State of Florida. After execution of the Agreement and before commencing work, the Contractor must provide the City a certified copy of the officially recorded Bond.

I-1.13 AGREEMENT
Section 2 – Powers of the City's Representatives
Add the following:
Article 2.05 CITY'S TERMINATION FOR CONVENIENCE:

The City may, at any time, terminate the Contract in whole or in part for the City's convenience and without cause. Termination by the City under this Paragraph shall be by a notice of termination delivered to the Contractor, specify the extent of termination and the effective date.

Upon receipt of a notice of termination, the Contractor shall immediately, in accordance with instructions from the City, proceed with performance of the following duties regardless of delay in determining or adjusting amounts due under this Paragraph:

(a) cease operations as specified in the notice;
(b) place no further orders and enter into no further subcontracts for materials, labor, services or facilities except as necessary to complete continued portions of the Contract;
(c) terminate all subcontracts and orders to the extent they relate to the Work terminated;
(d) proceed to complete the performance of Work not terminated; and
(e) take actions that may be necessary, or that the City may direct, for the protection and preservation of the terminated Work.

The amount to be paid to the Contract by the City because of the termination shall consist of:

(a) for costs related to work performed on the terminated portion of the Work prior to the effective date including termination costs relative to subcontracts that are properly chargeable to the terminated portion of the Work.
(b) the reasonable costs of settlement of the Work terminated, including accounting, legal, clerical and other expenses reasonable necessary for the preparation of termination settlement proposals and supporting data; additional costs of termination and settlement of subcontracts excluding amounts of such settlements; and storage, transportation, and other costs incurred which are reasonably necessary for the preservation, protection or disposition of the terminated Work; and
(c) a fair and reasonable profit on the completed Work unless the Contractor would have sustained a loss on the entire Contract had it been completed.

Allowance shall be made for payments previously made to the Contractor for the terminated portion of the Work, and claims which the City has against the Contractor under the Contract, and for the value of materials supplies, equipment or other items that are part of the costs of the Work to be disposed of by the Contractor.

I-1.14 Section 5 – subcontracts and Assignments, Article 5.01, Page A-7, Last Paragraph:
Change "…twenty-five (25) percent… "to fifty-one (51) percent…"

Section 10-Payments, Article .05 Partial Payments, 1st Paragraph, 1st Sentence:
Change "…fair value of the work done, and may apply for…" to "…fair value of the work done, and shall apply for…"

INSTRUCTIONS TO BIDDERS
SECTION 1 - SPECIAL INSTRUCTIONS

I-1.15 Contractors must utilize the U.S. Department of Homeland Security's E-Verify Systems to verify the employment eligibility of all persons employed during the term of the contract to perform employment duties within the State of Florida and all persons, including subcontractors, assigned by the contractor to perform work pursuant to the contract.

I-1.16 GENERAL PROVISIONS; G-2.02 Copies Furnished to Contractor: Replace the first paragraph with the following:

The Contractor shall acquire for its use copies of the plans and specifications as needed. The documents may be downloaded from the City's web site, at
http://www.tampagov.net/dept_contract_administration/programs_and_services/construction_project_bidding/index.asp

I-1.17 PAYMENT DISPUTE RESOLUTION

Any dispute pertaining to pay requests must be presented to the City pursuant to Executive Order 2003-1.

I-1.18 SCRUTINIZED COMPANIES.

For Contracts $1,000,000 and greater, if the City determines the Contractor submitted a false certification under Section 287.135(5) of the Florida Statutes, or if the Contractor has been placed on the Scrutinized Companies with Activities in the Sudan List or the Scrutinized Companies with Activities in the Iran Petroleum Energy Sector List, the City shall either terminate the Contract after it has given the Contractor notice and an opportunity to demonstrate the City's determination of false certification was in error pursuant to Section 287.135(5)(a) of the Florida Statutes, or maintain the Contract if the conditions of Section 287.135(4) of the Florida Statutes are met.

I-1.19 FLORIDA'S PUBLIC RECORDS LAW

4.33.3 The City of Tampa is a public agency subject to Chapter 119, Florida Statutes. In accordance with Florida Statutes, 119.0701, if applicable, Contractor shall comply with Florida's Public Records Law. Specifically, the Contractor shall:

1. Keep and maintain public records that ordinarily and necessarily would be required by the City in order to perform the service;

2. Provide the public with access to such public records on the same terms and conditions that the City would provide the records and at a cost that does not exceed that provided in Chapter 119, Florida Statutes, or as otherwise provided by law;

3. Ensure that public records that are exempt or that are confidential and exempt from public record requirements are not disclosed except as authorized by law;

4. Meet all requirements for retaining public records and transfer to the City, at no cost, all public records in possession of the contractor upon termination of the contract and destroy any duplicate public records that are exempt or confidential and exempt. All records stored electronically must be provided to the City in a format that is compatible with the information technology systems of the agency.

4.33.4 The failure of Contractor to comply with the provisions set forth in this Article shall constitute a Default and Breach of this award and the City shall enforce the Default in accordance with the provisions set forth in the DEFAULT/RE-AWARD section of this document.

SECTION 2
GENERAL INSTRUCTIONS

I-2.01 BIDDER'S RESPONSIBILITY
Before submitting Proposals, Bidders shall carefully examine the entire site of the proposed work and adjacent premises and the various means of approach and access to the site, and make all necessary investigations to inform themselves thoroughly as to the facilities necessary for delivering, placing and operating the necessary construction equipment, and for delivering and handling materials at the site, and inform themselves thoroughly as to all difficulties involved in the completion of all the work in accordance with the Contract Documents.

Bidders must examine the Plans, Specifications, and other Contract Documents and shall exercise their own judgment as to the nature and amount of the whole of the work to be done, and for the bid prices must assume all risk of variance, by whomsoever made, in any computation or statement of amounts or quantities necessary to complete the work in strict compliance with the Contract Documents.

Elevations of the ground are shown on the Plans and are believed to be reasonably correct, but are not guaranteed to be absolutely so and are presented only as an approximation. Bidders shall satisfy themselves as to the correctness of all elevations.

The City may have acquired, for its own use, certain information relating to the character of materials, earth formations, probable profiles of the ground, conditions below ground, and water surfaces to be encountered at the site of the proposed work. This information, if it exists, is on file at the offices of the Department of Public Works and Bidders will be permitted to see and examine this information for whatever value they consider it worth. However, this information is not guaranteed, and Bidders should satisfy themselves by making borings or test pits, or by such other methods as they may prefer, as to the character, location, and amounts of water, peat, clay, sand, quicksand, gravel, boulders, conglomerate, rock, gas or other material to be encountered or work to be performed.

Various underground and overhead structures and utilities are shown on the plans. The location and dimensions of such structures and utilities, where given, are believed to be reasonably correct, but do not purport to be absolutely so. These structures and utilities are plotted on the Plans for the information of the Bidders, but information so given is not to be construed as a representation or assurance that such structures will be found or encountered as plotted, or that such information is complete or accurate.

I-2.02 FORM, PREPARATION AND PRESENTATION OF PROPOSALS
Each Proposal shall be submitted upon the Proposal Form and in accordance with the instructions included herein. The Proposal Form must not be detached herefrom. All blank spaces for bid prices must be filled in, in both words and figures, with the unit or lump sum prices, or both, for which the Proposal is made. The computed total price for each unit price Contract Item shall be determined by multiplying the estimated quantity of the item, as set forth in the Proposal Form, by the corresponding unit price bid for such item. The resulting product shall be entered in the appropriate blank space under the column headed "Computed Total Price for Item". The lump sum price bid for each lump sum price Contract Item shall also be entered in the column headed "Computed Total Price for Item". If a Proposal contains any omissions, erasures, alterations, additions, or items not called for in the itemized Proposal, or contains irregularities of any kind, such may constitute sufficient cause for rejection of the Proposal. In case of any discrepancy in the unit price or amount bid for any item in the Proposal, the price as expressed in written words will govern. In no case is the Agreement Form to be filled out or signed by the Bidder.

In the case of certain jobs bid Lump Sum a "Schedule of Unit Prices" must be filled out as an attachment to the Lump Sum proposal. These prices may be used as a guide for the negotiation of change orders, at the City's option.

The proposal must be signed and certified and be presented on the prescribed form in a sealed envelope on/or before the time and at the place stated in the Notice of Bidders, endorsed with the name of the person, firm or corporation presenting it, the date of presentation, and the title of the work for which the Proposal is made.

Unless the apparent low bidder is now engaged in or has recently completed contract work for the City of Tampa, he, if requested, shall furnish to the City, after the opening of bids and prior to award, a summary statement of record of construction experience over the past three (3) years with proper supporting evidence, and, if required by the City, shall also furnish a list of equipment and other facilities pertinent to and available for the proper execution of the proposed work, and a statement of financial resources to the extent necessary to establish ability to carry on the proposed work. The City may make further investigations as considered necessary with respect to responsibility of the Bidder to whom it appears may be awarded the Contract.

If forwarded by mail, the sealed envelope containing the Proposal, endorsed as directed above, must be enclosed in another envelope addressed as specified in the Notice to Bidders and sent by registered mail.

I-2.03 ADDENDA AND INTERPRETATIONS
No interpretation of the meaning of the Plans, Specifications, or other Contract Documents will be made to any Bidder orally.

Every request for such interpretation must be in writing, addressed to the Contract Administration Department, Tampa Municipal Office Building, 4th Floor North, City Hall Plaza, Tampa, Florida 33602. To be given consideration, such request must be received at least seven (7) days prior to the date fixed for the opening of the Proposals. Any and all such interpretations and any supplemental instructions will be in the form of written addenda which, if issued, will be sent by certified mail, with return receipt requested, to all prospective bidders at the respective addresses furnished, for such purposes, not later than three (3) working days prior to the date fixed for the opening of the Proposals, and if requested, a copy will be delivered to the prospective bidder's representative. Failure of any Bidder to receive any such addenda shall not relieve said Bidder from any obligation under his Proposal as submitted. All addenda so issued shall become part of the Contract Documents.

I-2.04 BID SECURITY
Each Proposal must be accompanied by a certified or cashier's check issued by a solvent bank or trust company and payable at sight to the City of Tampa, in compliance with Section 255.051 Florida Statutes, or a Bid Bond upon the form provided herein, in an amount of not less than five percent of the sum of the computed total amount of the Bidder's Proposal as a guarantee that if the Proposal is accepted, the Bidder will execute and fill in the proposed Contract and Public Construction Bond within twenty (20) days after notice of award of the Contract. Certified checks shall have all necessary documentary revenue stamps attached if required by law. Surety on Bid Bonds shall be a duly authorized surety company authorized to do business in the State of Florida, and all such Bonds shall be issued or countersigned by a local resident producing agent, and satisfactory evidence of the authority of the person or persons executing such Bond to Execute the same shall be submitted with the Bond. Bid Bonds shall be issued by a surety company acceptable to the City.

Within ten (10) days after the opening of Proposals, the bid security of all but the three lowest Bidders will be returned. The bid security of the remaining two Bidders whose Proposals are not accepted will be

returned within ten (10) days after the execution of the Contract, or, if no such Contract has been executed, within ninety (90) days after the date of opening Proposals. The bid security of the Bidder whose Proposal is accepted will be returned only after he has duly executed the Contract and furnished the required Public Construction Bond and insurance.

Should it be necessary for the City to retain the bid security and said bid security is in the form of checks, the checks of these Bidders will be returned if replaced by Bid Bonds in an amount equal to the amount of the checks of such Bidders in such form and issued by a surety company acceptable to the City.

A Bidder may withdraw his Proposal before the time fixed for the opening of Proposals, without prejudice to himself, by communicating his purpose, in writing, to the Mayor and City Council, and when his communication is received, the Proposal will be handed to him or his authorized agent unopened. No Bidder may withdraw his Proposal within ninety (90) days after the day of opening Proposals.

The Bidder whose Proposal is accepted shall enter into a written contract, upon the Agreement form included herein, for the performance of the work and furnish the required Public Construction Bond within twenty (20) days after written notice by the City of Award of Contract has been served on such Bidder personally or after receipt of the written notice by registered mail to such Bidder at the address given in his Proposal.

If the Bidder to whom a Contract is awarded refuses or neglects to execute it or fails to furnish the required Public Construction Bond within twenty (20) days after receipt by him of the Notice of Award of Contract, the amount of his bid security shall be forfeited and shall be retained by the City as liquidated damages, and not as a penalty, it being now agreed that said sum is a fair estimate of the amount of damages that the City will sustain in case said Bidder fails to enter into a Contract and furnish the required Public Construction Bond. If a Bid Bond was furnished, the full amount of the Bond shall become due and payable as liquidated damages caused by such failure. The full amount of the bid security shall be forfeited as liquidated damages without consideration of the fact that an award may be less than the full amount of the Bidder's Proposal, excepting that the award shall be within the conditions of said Proposal relating to the basis of consideration for an award. No plea of mistake in the bid or misunderstanding of the conditions of forfeiture shall be available to the Bidder for the recovery of his deposit or as a defense to any action based upon the neglect or refusal to execute a contract.

I-2.05 LAWS AND REGULATIONS
The Bidder who is awarded the Contract must comply with all laws of the State of Florida, and all applicable Ordinances of the City of Tampa respecting labor and compensation and with all other statutes, ordinances, rules and regulations applicable and having the force of law.

I-2.06 PUBLIC CONSTRUCTION BOND
The Bidder who is awarded the Contract will be required to furnish a Public Construction Bond upon the form provided herein, equal to 100 percent of the Contract price, such Bond to be executed by a surety company acceptable to the City of Tampa and licensed to underwrite contracts in the State of Florida. Surety companies shall have a rating of not less than: B+ Class VI as evaluated in the most recently circulated BEST'S KEY RATING GUIDE PROPERTY-LIABILITY.

I-2.07 SIGNATURE AND QUALIFICATIONS OF BIDDERS
Proposals must be signed in ink by the Bidder with signature in full. When a firm is a Bidder, the Proposal shall be signed in the name of the firm by one or more of the partners. When a corporation is a Bidder the officer signing shall set out the corporate name in full beneath which he shall sign his name and give the title of his office. The Proposal shall also bear the seal of the corporation attested by its secretary. Anyone signing the Proposal as agent must file with it legal evidence of his authority to do so.

Bidders who are nonresident corporations shall furnish to the City a duly certified copy of their permit to transact business in the State of Florida, signed by the Secretary of State, within ten days of the notice to do so. Such notice will be given to Bidders who are nonresident corporations, to whom it appears an award will be made, and the copy of the permit must be filed with the City before the award will be made. Failure to promptly submit this evidence of qualification to do business in the State of Florida may be basis for rejection of the Proposal.

I-2.08 REJECTION OF PROPOSALS
The City reserves the right to reject any Proposal if investigation of the Bidder fails to satisfy the City that such Bidder is properly qualified to carry out the obligations and to complete the work contemplated therein. Any or all Proposals will be rejected if there is reason to believe that collusion exists among Bidders. Proposals will be considered irregular and may be rejected if they show serious omissions, alterations in form, additions not called for, conditions or unauthorized alternates, or irregularities of any kind. The City reserves the right to reject any or all Proposals and to waive such technical errors as may be deemed best for the interests of the City.

I-2.09 QUANTITIES ESTIMATED ONLY
The estimate of quantities of the various items of work and materials, if set forth in the Proposal Form, is approximate only and is given solely to be used as a uniform basis for the comparison of Proposals. The quantities actually required to complete the Contract work may be less or more than so estimated, and if awarded a Contract for the work specified, the Contractor agrees that he will not make any claim for damages or for loss of profits because of a difference between the quantities of the various classes of work assumed for comparison of Proposals and quantities of work actually performed. The City further reserves the right to vary the quantities in any amount.

I-2.10 COMPARISON OF PROPOSALS
Except jobs bid on a "One Lump Sum" basis, proposals will be compared on the basis of a total computed price arrived at by taking the sum of the estimated quantity of each time and the corresponding unit price of each item, and including any lump sum prices on individual items.

The computed total prices for individual Contract Items and the total computed price for the entire Contract, as entered by the Bidder in the Proposal Form, are for convenience only and are subject to correction in the tabulation and computation of the Proposals.

I-2.11 BASIS OF AWARD
The Contract will be awarded, if at all, to the lowest responsible Bidder or Bidders, as determined by the City and by the terms and conditions of the Contract Documents. Unless all bids are rejected, the award will be made within ninety (90) days after the opening of Proposals. The successful Bidder will be required to possess, or obtain, a valid City Occupational License.

I-2.12 INSURANCE REQUIRED
The successful Bidder and his subcontractors will be required to procure and pay for insurance covering the work in accordance with the provisions of Article 6.02 of the Agreement as indicated on special instructions pages beginning with INS-1.

I-2.13 NO ASSIGNMENT OF BID
No Bidder shall assign his bid or any rights thereunder.

I-2.14 NONDISCRIMINATION IN EMPLOYMENT
Contracts for work under this Proposal will obligate the contractors and subcontractors not to discriminate in employment practices.

Bidders must, if requested, submit with their initial bid a signed statement as to whether they have previously performed work subject to the President's Executive Order Nos. 11246 and 11375.
Bidders must, if requested, submit a compliance report concerning their employment practices and policies in order to maintain their eligibility to receive the award of the Contract.

Successful Bidders must, if requested, submit a list of all subcontractors who will perform work on the project and written,

signed statement from authorized agents of the labor pools with which they will or may deal for employees on the work together with supporting information to the effect that said labor pools practices and policies are in conformity with Executive Order No. 11246 and that said labor pools will affirmatively cooperate in or offer no hindrance to the recruitment, employment and equal treatment of employees seeking employment and performing work under the Contract, or a certification as to what efforts have been made to secure such statements when such agents or labor pools have failed or refused to furnish them prior to the award of the Contract.

I-2.15 LABOR STANDARDS
The Bidder's attention is directed to the Contract Provisions of the Labor Standards for federally assisted projects which may be attached to and made a part of the Agreement.

I-2.16 NOTICE TO LABOR UNIONS
If applicable, the successful Bidder will be required to provide Labor Unions and other organizations of workers a completed copy of the form entitled "Notice to Labor Unions or Other Organizations of Workers", and such form may be made a part of the Agreement.

I-2.17 NOTICE TO PROSPECTIVE FEDERALLY-ASSISTED CONSTRUCTION CONTRACTORS
A Certification of Nonsegregated Facilities, as required by the May 9, 1967, Order (32 F.R. 7439, May 19, 1967) on Elimination of Segregated Facilities, by the Secretary of Labor, must be submitted to said Secretary prior to the award of a federally-assisted construction and Contract exceeding $10,000 which is not exempt from the provisions of the Equal Opportunity Clause. The form of certification may be bound herein following the form of Bid Bond.

Contractors receiving federally-assisted construction Contract awards exceeding $10,000 which are not exempt from the provisions of the Equal Opportunity Clause will be required to provide for the forwarding of the following notice to prospective subcontractor for supplies and construction contracts where the subcontracts exceed $10,000 and are not exempt from the provisions of the Equal Opportunity Clause:

NOTICE TO PROSPECTIVE SUBCONTRACTORS OF REQUIREMENT
FOR CERTIFICATIONS OF NONSEGREGATED FACILITIES

"A Certification of Nonsegregated Facilities, as required by the May 9, 1967, Order (32 F.R. 7439, May 19, 1967) on Elimination of Segregated Facilities, by the Secretary of Labor, must be submitted prior to the award of a subcontract exceeding $10,000 which is not exempt from the provisions of the Equal Opportunity Clause."

"Contractors receiving subcontract awards exceeding $10,000 which are not exempt from the provisions of the Equal Opportunity Clause will be required to provide from the forwarding of this notice to prospective subcontractors for supplies and construction contracts where the subcontracts exceed $10,000 and are not exempt from the provisions of the Equal Opportunity Clause."

The United States requires a pre-award conference if a proposed construction contract exceeds one million dollars to determine if the the prospective contractor is in compliance with the Equal Employment Opportunity requirements of Executive Order 11246 of September 24, 1965. In such instances, a meeting may be scheduled at which the prospective contractor must specify what affirmative action he has taken or proposed to take to assure equal employment opportunity which must be approved by the United States before award of the contract will be authorized.

Bidders must be prepared to submit an Equal Employment Opportunity (EEO) plan at a pre-award conference. The plan must include bidding opportunities offered by the Bidder to minority subcontractors.

On October 13, 1971, President Nixon issued Executive Order 11246 emphasizing the government's commitment to the promotion of minority business enterprise. Accordingly, the United States is firmly committed to the utilization of available resources to support this important program. U.S. agencies are most interested in realizing minority participation on the subject. Achieving equal employment opportunity compliance is required through Executive Order 11246. WE cannot emphasize too strongly that minority subcontractors be extended subcontractors bidding opportunities as but one step in your affirmative action policy.

Due to the importance of this contract, U.S. Agencies may conduct an EEO Conference prior to the award of the Contract. It is suggested that the responsive Bidder confirm the minority subcontractors he contacted for bids or quotations in his EEO plan submitted at the conference.

I-2.18 EEO AFFIRMATIVE ACTION REQUIREMENTS
By the submission of a Proposal, each Bidder acknowledges that he understands and will agree to be bound by the equal opportunity requirements of Federal regulations which shall be applicable throughout the performance of work under any contract awarded pursuant to solicitation. Each Bidder agrees that if awarded a contract, he will similarly bind contractually each subcontractor. In policies, each Bidder further understands and agrees that if awarded a contract, he must engage in Affirmative Action directed to promoting and ensuring equal employment opportunity in the work force used under the contract (and he must require contractually the same effort of all subcontractors whose subcontracts exceed $100,000). The Bidder understands and agrees that "Affirmative Action" as used herein shall constitute a good faith effort to achieve and maintain minority employment in each trade in the on-site work force used on the project. * * * * * * * END of SECTION * * * * * * *

CITY OF TAMPA INSURANCE REQUIREMENTS

During the life of the award/contract the Awardee/Contractor shall provide, pay for, and maintain insurance with companies authorized to do business in Florida, with an A.M. Best rating of B+ (or better) Class VII (or higher), or otherwise be acceptable to the City if not rated by A.M. Best. All insurance shall be from responsible companies duly authorized to do business in the State of Florida.

All commercial general liability insurance policies (and Excess or Umbrella Liability Insurance policies, if applicable) shall provide that the City is an additional insured as to the operations of the Awardee/Contractor under the award/contract including the additional insured endorsement, the subrogation wavier endorsement, and the Severability of Interest Provision. In lieu of the additional named insured requirement, if the Awardee/Contractor's company has a declared existing policy which precludes it from including additional insureds, the City may permit the Contractor to purchase an Owners and Contractors Protective Liability policy. Such policy shall be written in the name of the City at the same limit as is required for General Liability coverage. The policy shall be evidenced on an insurance binder which must be effective from the date of issue until such time as a policy is in existence and shall be submitted to the City in the manner described below as applicable to certificates of insurance.

The insurance coverages and limits required must be evidenced by a properly executed Acord 25 Certificate of Insurance form or its equivalent. Each Certificate must be personally manually signed by the Authorized Representative of the insurance company shown in the Certificate with proof that he/she is an authorized representative thereof. Thirty days' written notice must be given to the City of any cancellation, intent not to renew, or reduction in the policy coverages, except in the application of the aggregate liability limits provisions. Should any aggregate limit of liability coverage be reduced, it shall be immediately increased back to the limit required by the contract. The insurance coverages required herein are to be primary to any insurance carried by the City or any self-insurance program thereof.

The following coverages are required:

A. Commercial General Liability Insurance shall be provided on the most current Insurance Services Office (ISO) form or its equivalent. This coverage must be provided to cover liability arising from premises and operations, independent contractors, products and completed operations, personal and advertising injury, contractual liability, and XCU exposures (if applicable). Completed operations liability coverage shall be maintained for a minimum of one-year following completion of work. The amount of Commercial General Liability insurance shall not be less than the amount specified.

(a) $1,000,000 per occurrence and a $2,000,000 general aggregate for projects valued at $2,000,000 or less. General aggregate limit for projects over that price shall equal or exceed the price of the project. An Excess or Umbrella Liability insurance policy can be provided to meet the required limit. Risk Management may be contacted for additional information regarding projects of this nature.

B. Automobile Liability Insurance shall be maintained in accordance with the laws of the State of Florida, as to the ownership, maintenance, and use of all owned, non-owned, leased, or hired vehicles. The amount of Automobile Liability Insurance shall not be less than the amount specified.

(a) $500,000 combined single limit each occurrence bodily injury & property damage- for projects valued at $100,000 and under

(b) $1,000,000 combined single limit each occurrence bodily injury & property damage – for projects valued over $100,000

C. Worker's Compensation and Employer's Liability Insurance shall be provided for all employees engaged in the work under the contract, in accordance with the Florida Statutory Requirements. The amount of the Employer's Liability Insurance shall not be less than:

(a) $500,000 bodily injury by accident and each accident, bodily injury by disease policy limit, and bodily injury by disease each employee – for projects valued at $100,00 and under
(b) $1,000,000 bodily injury by accident and each accident, bodily injury by disease policy limit, and bodily injury by disease each –for projects valued over $100,000

D. Excess Liability Insurance or Umbrella Liability Insurance may compensate for a deficiency in general liability, automobile, or worker's compensation insurance coverage limits. If the Excess or Umbrella policy is being provided as proof of coverage, it must name the City of Tampa as an additional insured **(IF APPLICABLE).**

E. Builder's Risk Insurance, specialized policy designed to cover the property loss exposures that are associated with construction of buildings. The amount of coverage should not be less than the amount of the project. **(IF APPLICABLE).**

F. Installation Floater- a builder's risk type policy that covers specific type of property during its installation, is coverage required for highly valued equipment or materials such as compressors, generators, or other machinery that are not covered by the builder's risk policy **(IF APPLICABLE).**

G. Longshoreman's & Harbor Worker's Compensation Act/Jones Act coverage shall be maintained for work being conducted upon navigable water of the United States. The limit required shall be the same limit as the worker's compensation/employer's liability insurance limit **(IF APPLICABLE).**

H. Professional Liability shall be maintained against claims of negligence, errors, mistakes, or omissions in the performance of the services to be performed and furnished by the Awardee/Contractor or any of its subcontractors when it acts as a DESIGN PROFESSIONAL. The amount of coverage shall be no less than amount specified **(IF APPLICABLE).**

(a) $1,000,000 per incident and general aggregate. Note all claims made policies must provide the date of retroactive coverage.

The City may waive any or all of the above referenced insurance requirements based on the specific nature of goods or services to be provided under the award/contract.

ADDITIONAL INSURED - The City must be included as an additional insured by on the general and (Excess or Umbrella liability policies) if applicable. Alternatively, the Contractor may purchase a separate owners protective liability policy in the name of the City in the specified amount as indicated in the insurance requirements.

CLAIMS MADE POLICIES - If any liability insurance is issued on a claims made form, Contractor agrees to maintain uninterrupted coverage for a minimum of one year following completion and acceptance of the work either through purchase of an extended reporting provision, or through purchase of successive renewals with a retroactive date not later than the beginning of performance of work for the City. The retroactive date must be provided for all claims made policies.

CANCELLATION/NON-RENEWAL - Thirty (30) days written notice must be given to the City of any cancellation, intent to non-renew or material reduction in coverages (except aggregate liability limits). However, ten (10) days notice may be given for non-payment of premium. Notice shall be sent to the City of Tampa Department of Public Works, 306 E. Jackson Street, Tampa, FL 33602.

NUMBER OF POLICIES - General and other liability insurance may be arranged under single policies for the full amounts required or by a combination of underlying policies with the balance provided by an excess or umbrella liability insurance policy.

WAIVER OF SUBROGATION - Contractor waives all rights against City, its agents, officers, directors and employees for recovery of damages to the extent such damage is covered under the automobile or excess liability policies.

SUBCONTRACTORS - It is the Contractor's responsibility to require all subcontractors to maintain adequate insurance coverage.

PRIMARY POLICIES - The Contractor's insurance is primary to the City's insurance or any self insurance program thereof.

RATING - All insurers shall be authorized to do business in Florida, and shall have an A.M. Best rating of B+ (or better), Class VII (or higher), or otherwise be acceptable to the City if not rated by A.M. Best.

DEDUCTIBLES - The Contractor is responsible for all deductibles. In the event of loss which would have been covered but for the presence of a deductible, the City may withhold from payment to Contractor an amount equal to the deductible to cover such loss should full recovery not be obtained under the insurance policy.

INSURANCE ADJUSTMENTS - These insurance requirements may be increased, reduced, or waived at the City's sole option with an appropriate adjustment to the Contract price.

Document updated on 12/22/2009 by RLD (Risk Management)

City of Tampa MBD Office

U-WMBE Goal Setting Firms Report

6/12/15

ASPHALT PAVING SERVICES

BUN Construction Co., Inc. **Federal Number** 59-3362663
4202 E. Martin Luther King Blvd. **Phone** (813) 931-8270 **Minority** African American
Tampa, FL 33610 **Fax** (813) 931-9185 **Contact** Bart Nwagbuo
E-mail bunconstruction@tampabay.rr.com

E.S. Concrete Services, Inc. **Federal Number** 59-3119582
726 East Harbor Dr. South **Phone** (727) 821-5029 **Minority** African American
St. Petersburg, FL 33705 **Fax** (727) 821-5029 **Contact** Enoris Sly
E-mail enorisslysr@yahoo.com

CONCRETE (CURBS & GUTTERS)

E.S. Concrete Services, Inc. **Federal Number** 59-3119582
726 East Harbor Dr. South **Phone** (727) 821-5029 **Minority** African American
St. Petersburg, FL 33705 **Fax** (727) 821-5029 **Contact** Enoris Sly
E-mail enorisslysr@yahoo.com

Paragon Building Contractors, Inc. **Federal Number**
59-2464751
1201 W. Waters Ave. **Phone** (813) 935-1600 **Minority** African American
Tampa, FL 33604 **Fax** (813) 932-1108 **Contact** Al Davis
E-mail paragonb@tampabay.rr.com

Denson Construction, Inc. **Federal Number** 59-3571944
P.O. Box 3081 **Phone** (863) 709-1001 **Minority** African American
Plant City, FL 33564 **Fax** (863) 709-1071 **Contact** Ralph (Pete) Denson
E-mail Pete@denson-construction.com

L.S. Curb Service, Inc. **Federal Number** 59-3252745
4206 James L. Redman Pkwy **Phone** (813) 737-1524 **Minority** African American
Plant City, FL 33567 **Fax** (813) 650-8654 **Contact** Leaford Shakes
E-mail lshakes@lscurb.com

City of Tampa MBD Office

U-WMBE Goal Setting Firms Report

6/12/15

CONCRETE (REINFORCED)

Paragon Building Contractors, Inc. **Federal Number** 59-2464751
1201 W. Waters Ave. **Phone** (813) 935-1600 **Minority** African American
Tampa, FL 33604 **Fax** (813) 932-1108 **Contact** Al Davis
E-mail paragonb@tampabay.rr.com

Denson Construction, Inc. **Federal Number** 59-3571944
P.O. Box 3081 **Phone** (863) 709-1001 **Minority** African American
Plant City, FL 33564 **Fax** (863) 709-1071 **Contact** Ralph (Pete) Denson
E-mail Pete@denson-construction.com

CONCRETE (SIDEWALKS, DRIVEWAYS, FORM & FINISH)

E.S. Concrete Services, Inc. **Federal Number** 59-3119582
726 East Harbor Dr. South **Phone** (727) 821-5029 **Minority** African American
St. Petersburg, FL 33705 **Fax** (727) 821-5029 **Contact** Enoris Sly
E-mail enorisslysr@yahoo.com

MIMS Construction Company **Federal Number** 59-3442318
P.O. Box 681554 **Phone** (407) 298-6936 **Minority** African American
Orlando, FL 32868-1554 **Fax** (407) 290-1217 **Contact** Lyndell Mims
E-mail lynn@mimsconstruction.com

Paragon Building Contractors, Inc. **Federal Number** 59-2464751
1201 W. Waters Ave. **Phone** (813) 935-1600 **Minority** African American
Tampa, FL 33604 **Fax** (813) 932-1108 **Contact** Al Davis
E-mail paragonb@tampabay.rr.com

City of Tampa MBD Office

U-WMBE Goal Setting Firms Report

6/12/15

CONCRETE (SIDEWALKS, DRIVEWAYS, FORM & FINISH)

Denson Construction, Inc. **Federal Number** 59-3571944
P.O. Box 3081 **Phone** (863) 709-1001 **Minority** African American
Plant City, FL 33564 **Fax** (863) 709-1071 **Contact** Ralph (Pete) Denson
E-mail Pete@denson-construction.com

L.S. Curb Service, Inc. **Federal Number** 59-3252745
4206 James L. Redman Pkwy **Phone** (813) 737-1524 **Minority** African American
Plant City, FL 33567 **Fax** (813) 650-8654 **Contact** Leaford Shakes
E-mail lshakes@lscurb.com

Allen Masonry & General Contracting, Inc. **Federal Number** 20-1580292
6215 Travis Blvd. **Phone** (813) 627-9231 **Minority** African American
Tampa, FL 33610 **Fax** **Contact** Steve Allen
E-mail allenmasonrygc@gmail.com

CONCRETE, BRICK, MASONARY

MIMS Construction Company **Federal Number** 59-3442318
P.O. Box 681554 **Phone** (407) 298-6936 **Minority** African American
Orlando, FL 32868-1554 **Fax** (407) 290-1217 **Contact** Lyndell Mims
E-mail lynn@mimsconstruction.com

Paragon Building Contractors, Inc. **Federal Number** 59-2464751
1201 W. Waters Ave. **Phone** (813) 935-1600 **Minority** African American
Tampa, FL 33604 **Fax** (813) 932-1108 **Contact** Al Davis
E-mail paragonb@tampabay.rr.com

Horus Construction Services **Federal Number** 59-3675651
P.O. Box 10667 **Phone** (727) 898-6877 **Minority** African American
St. Petersburg, FL 33733 **Fax** (727) 898-6896 **Contact** James Graham, Jr.
E-mail horuscons1@juno.com

City of Tampa MBD Office

U-WMBE Goal Setting Firms Report

6/12/15

CONCRETE, BRICK, MASONARY

Excel 4, LLC — **Federal Number** 45-4149326
P.O. Box 4475 — **Phone** (407) 480-8976 — **Minority** African American
Winter Park, FL 32793 — **Fax** — **Contact** Cleo Davis
E-mail excel4llc@yahoo.com

Mason Global LLC — **Federal Number** 47-1844251
6133 Lanshire Dr — **Phone** (813) 323-3648 — **Minority** African American
Tampa, FL 33634 — **Fax** — **Contact** Alan Robinson
E-mail alan@masongloballlc.com

LANDSCAPING (TREES, LAWN, NEW CONSTRUCTION)

Bay Light, LLC d/b/a Professional Property Services — **Federal Number** 59-1341451
10105 11th Street North — **Phone** (813) 972-4057 — **Minority** African American
Tampa, FL 33612 — **Fax** (813) 971-0882 — **Contact** Hyacinth Robinson
E-mail paulrobinson22@msn.com

Fresh Start Development, Inc. — **Federal Number** 20-3857845
P.O. Box 310592 — **Phone** (813) 758-5345 — **Minority** African American
Tampa, FL 33680 — **Fax** (813) 333-5949 — **Contact** Katina McClinton
E-mail freshstartdevelop@yahoo.com

On-Point Group, Inc. — **Federal Number** 38-3788119
5608 Puritan Rd — **Phone** (813) 927-2808 — **Minority** African American
Tampa, FL 33617 — **Fax** (813) 374-0993 — **Contact** Daphne Jones
E-mail d.jones@on-pointgroupinc.com

AAJ Lawn Care Services, Inc. — **Federal Number** 26-0254393
3716 E. Idlewild Avenue — **Phone** (813) 220-8533 — **Minority** African American
Tampa, FL 33610 — **Fax** (888) 277-1860 — **Contact** Archie Jerry
E-mail aajlawncare@gmail.com

Alpha Field Services, LLC — **Federal Number** 90-1007218
27251 Wesley Chapel Blvd # 513 — **Phone** (813) 900-2687 — **Minority** African American
Wesley Chapel, FL — **Fax** (813) 907-2810 — **Contact** Lorraine Harris
E-mail support@alphafieldservices.com

DEANS ENVIRONMENTAL SERVICES — **Federal Number** 83-0461047
2126 Whispering Trails Blvd — **Phone** (863) 595-8255 — **Minority** African American
Winter Haven, FL 33884 — **Fax** (904) 791-9060 — **Contact** KYLE DEAN
E-mail DEANK8859@AOL.COM

City of Tampa MBD Office

U-WMBE Goal Setting Firms Report

6/12/15

PIPE AND PIPE FITTINGS

Suca Pipe Supply, Inc. **Federal Number** 59-2499571
P.O. Box 272482 **Phone** (813) 249-7902 **Minority** African American
Tampa, FL 33618 **Fax** (813) 249-7384 **Contact** Secedrick McIntyre
E-mail slmau44@yahoo.com

DRD Enterprises, LLC **Federal Number** 20-4675317
4104 Yellowwood Dr. **Phone** (813) 476-9933 **Minority** African American
Valrico, FL 33594 **Fax** (866) 850-1332 **Contact** Devon Deenah
E-mail ddeenah@drdenterprise.com

Terrell Industries, Inc. **Federal Number** 65-0530148
2067 1st Avenue N **Phone** (727) 823-4424 **Minority** African American
St. Petersburg, FL 33713 **Fax** (727) 823-3977 **Contact** Grady Terrell
E-mail gterrell@verizon.net

Suca Pipe Supply, Inc. One **Federal Number** 26-3669556
4910 Lowell Road **Phone** (813) 249-7902 **Minority** African American
Tampa, FL 33624 **Fax** (813) 249-7384 **Contact** Ashley McIntyre
E-mail mactwinau1@yahoo.com

SURVEYORS' SERVICES

Spectra Engineering and Research, Inc. **Federal Number** 59-3009648
1060 Maitland Center Commons, Suite 340 **Phone** (407) 951-8844 **Minority** African American
Maitland, FL 32751 **Fax** (407) 951-8845 **Contact** Peter Okonkwo
E-mail spectra@spectraengr.com

VIDEO SERVICES, PHOTOGRAPHY

Kerrick Williams Photography, LLC **Federal Number** 59-3225186
811 Hickory Glen Drive **Phone** (813) 571-3768 **Minority** African American
Seffner, FL 33584 **Fax** (866) 571-7149 **Contact** Kerrick Williams
E-mail kerrick@kerrickwilliams.com

City of Tampa MBD Office

U-WMBE Goal Setting Firms Report

6/12/15

VIDEO SERVICES, PHOTOGRAPHY

DeHa Multimedia, LLC **Federal Number** 26-0527750

P.O. Box 23532
Tampa, FL 33623

Phone (813) 340-3017
Fax (813) 891-0332

Minority African American
Contact Hakeem Ali

E-mail hakeem@dehamagazine.com

The Webb Works **Federal Number** 55-0870869

3421 South Gardenia Drive
Tampa, FL 33629

Phone (813) 817-9840
Fax

Minority African American
Contact James Webb

E-mail jim@thewebbworks.com

City of Tampa MBD Office

SLBE Goal Setting Firms Report

as of 6/12/2015

ASPHALT PAVING SERVICES

BUN Construction Co., Inc. **Federal Number** 59-3362663

4202 E. Martin Luther King Blvd.
Tampa, FL 33610

Phone (813) 931-8270
Fax (813) 931-9185
Minority Small Business
Contact Bart Nwagbuo
E-mail bunconstruction@tampabay.rr.com

Castco Construction, Inc. **Federal Number** 59-2548614

9001 126th Ave. North
Largo, FL 33773

Phone (727) 585-4714
Fax (727) 585-5091
Minority Small Business
Contact Israel Castro
E-mail cconstr@tampabay.rr.com

E.S. Concrete Services, Inc. **Federal Number** 59-3119582

726 East Harbor Dr. South
St. Petersburg, FL 33705

Phone (727) 821-5029
Fax (727) 821-5029
Minority Small Business
Contact Enoris Sly
E-mail enorisslysr@yahoo.com

Johnson's Excavation & Services, Inc. **Federal Number** 59-3031174

1706 East Trapnell Road
Plant City, FL 33566

Phone (813) 752-7097
Fax (813) 719-9052
Minority Small Business
Contact Donathan Johnson
E-mail sales@jescontracting.com

Parking Lot Striping Service **Federal Number** 59-1522393

P.O. Box 11005
Tampa, FL 33680

Phone (813) 623-1454
Fax (813) 664-0140
Minority Small Business
Contact Fernando Llop
E-mail lindaplss@aol.com

Mend It Asphalt & Concrete Services, Inc. **Federal Number** 59-3274522

4915 15th Avenue South
Gulfport, FL 33707

Phone (727) 327-7784
Fax (727) 327-4504
Minority Small Business
Contact Robert Mendez
E-mail menditasphaltconcrete@yahoo.com

Superior Construction & Contracting, LLC **Federal Number** 27-0679204

4402 Osborne Ave
Tampa, FL 33614

Phone (813) 712-7325
Fax (813) 868-1163
Minority Small Business
Contact Michael Strouse
E-mail jmartinez@superiorflorida.net

City of Tampa MBD Office

SLBE Goal Setting Firms Report

as of 6/12/2015

CONCRETE (CURBS & GUTTERS)

E.S. Concrete Services, Inc. **Federal Number** 59-3119582

726 East Harbor Dr. South
St. Petersburg, FL 33705

Phone (727) 821-5029 **Minority** Small Business
Fax (727) 821-5029 **Contact** Enoris Sly
E-mail enorisslysr@yahoo.com

Parking Lot Striping Service **Federal Number** 59-1522393

P.O. Box 11005
Tampa, FL 33680

Phone (813) 623-1454 **Minority** Small Business
Fax (813) 664-0140 **Contact** Fernando Llop
E-mail lindaplss@aol.com

Tampa Bay Construction & Engineering, Inc. **Federal Number** 59-3713572

10503 Palm Cove Ave
Tampa, FL 33647

Phone (813) 984-9898 **Minority** Small Business
Fax (813) 907-0980 **Contact** Ahmad Erchid
E-mail aerchid@tbcei.com

Velez Concrete Construction, Inc. **Federal Number** 83-0373603

3926 E. Eden Roc Circle
Tampa, FL 33634

Phone (813) 493-4762 **Minority** Small Business
Fax (813) 882-3455 **Contact** John Velez
E-mail velezconcrete99@gmail.com

Tagarelli Construction, Inc. **Federal Number** 59-3339407

P.O. Box 681
Tarpon Springs, FL 34689

Phone (727) 937-6171 **Minority** Small Business
Fax (727) 937-6172 **Contact** Michael Tagarelli
E-mail tagarelli@verizon.net

Velocity Construction, Inc. **Federal Number** 74-3082984

1320 E. 137th Ave
Tampa, FL 33613

Phone (813) 624-2117 **Minority** Small Business
Fax (800) 807-0314 **Contact** William Connor
E-mail bconnor@tampabay.rr.com

Kilgore Construction, LLC **Federal Number** 26-3771464

11697 Walsingham Rd.
Largo, FL 33778

Phone (727) 755-2294 **Minority** Small Business
Fax (727) 581-5724 **Contact** Harold Kilgore
E-mail jo@kilgorellc.com

City of Tampa MBD Office

SLBE Goal Setting Firms Report

as of 6/12/2015

CONCRETE (CURBS & GUTTERS)

JMJ Site Development, Inc — **Federal Number** 27-3413832

P.O. Box 1095
Lithia, FL 33547

Phone (813) 927-2484
Fax
Minority Small Business
Contact Jeff Joaquin
E-mail jmjsitedevelopment@gmail.com

Quick Construction Solutions, LLC — **Federal Number** 90-0972890

4501 N. Saint Vincent St.
Tampa, FL 33614

Phone (813) 377-9997
Fax (813) 374-5849
Minority Small Business
Contact Jorge Castro
E-mail quickcs@outlook.com

CONCRETE (REINFORCED)

Castco Construction, Inc. — **Federal Number** 59-2548614

9001 126th Ave. North
Largo, FL 33773

Phone (727) 585-4714
Fax (727) 585-5091
Minority Small Business
Contact Israel Castro
E-mail cconstr@tampabay.rr.com

Parking Lot Striping Service — **Federal Number** 59-1522393

P.O. Box 11005
Tampa, FL 33680

Phone (813) 623-1454
Fax (813) 664-0140
Minority Small Business
Contact Fernando Llop
E-mail lindaplss@aol.com

Tampa Bay Construction & Engineering, Inc. — **Federal Number** 59-3713572

10503 Palm Cove Ave
Tampa, FL 33647

Phone (813) 984-9898
Fax (813) 907-0980
Minority Small Business
Contact Ahmad Erchid
E-mail aerchid@tbcei.com

Velocity Construction, Inc. — **Federal Number** 74-3082984

1320 E. 137th Ave
Tampa, FL 33613

Phone (813) 624-2117
Fax (800) 807-0314
Minority Small Business
Contact William Connor
E-mail bconnor@tampabay.rr.com

City of Tampa MBD Office

SLBE Goal Setting Firms Report

as of 6/12/2015

CONCRETE (REINFORCED)

Quick Construction Solutions, LLC — **Federal Number** 90-0972890

4501 N. Saint Vincent St.
Tampa, FL 33614

Phone (813) 377-9997
Fax (813) 374-5849
E-mail quickcs@outlook.com

Minority Small Business
Contact Jorge Castro

Premier Florida Industrial Services, Inc. — **Federal Number** 45-3577380

4916 W. Linebaugh Ave., Ste. 103
Tampa, FL 33624

Phone (813) 569-0412
Fax (813) 569-0413
E-mail pj@premier-florida.com

Minority Small Business
Contact Paul Pinet

CONCRETE (SIDEWALKS, DRIVEWAYS, FORM & FINISH)

Castco Construction, Inc. — **Federal Number** 59-2548614

9001 126th Ave. North
Largo, FL 33773

Phone (727) 585-4714
Fax (727) 585-5091
E-mail cconstr@tampabay.rr.com

Minority Small Business
Contact Israel Castro

E.S. Concrete Services, Inc. — **Federal Number** 59-3119582

726 East Harbor Dr. South
St. Petersburg, FL 33705

Phone (727) 821-5029
Fax (727) 821-5029
E-mail enorisslysr@yahoo.com

Minority Small Business
Contact Enoris Sly

Parking Lot Striping Service — **Federal Number** 59-1522393

P.O. Box 11005
Tampa, FL 33680

Phone (813) 623-1454
Fax (813) 664-0140
E-mail lindaplss@aol.com

Minority Small Business
Contact Fernando Llop

Sunrise Utility Construction, Inc. — **Federal Number** 59-3034012

P.O. Box 272293
Tampa, FL 33688-2293

Phone (813) 949-3749
Fax (813) 949-0408
E-mail LMNBOSS@AOL.COM

Minority Small Business
Contact Lisa Nehrboss

City of Tampa MBD Office

SLBE Goal Setting Firms Report

as of 6/12/2015

CONCRETE (SIDEWALKS, DRIVEWAYS, FORM & FINISH)

Tampa Bay Construction & Engineering, Inc. **Federal Number** 59-3713572

10503 Palm Cove Ave
Tampa, FL 33647

Phone (813) 984-9898
Fax (813) 907-0980
E-mail aerchid@tbcei.com

Minority Small Business
Contact Ahmad Erchid

Velez Concrete Construction, Inc. **Federal Number** 83-0373603

3926 E. Eden Roc Circle
Tampa, FL 33634

Phone (813) 493-4762
Fax (813) 882-3455
E-mail velezconcrete99@gmail.com

Minority Small Business
Contact John Velez

Tagarelli Construction, Inc. **Federal Number** 59-3339407

P.O. Box 681
Tarpon Springs, FL 34689

Phone (727) 937-6171
Fax (727) 937-6172
E-mail tagarelli@verizon.net

Minority Small Business
Contact Michael Tagarelli

Mend It Asphalt & Concrete Services, Inc. **Federal Number** 59-3274522

4915 15th Avenue South
Gulfport, FL 33707

Phone (727) 327-7784
Fax (727) 327-4504
E-mail menditasphaltconcrete@yahoo.com

Minority Small Business
Contact Robert Mendez

Velocity Construction, Inc. **Federal Number** 74-3082984

1320 E. 137th Ave
Tampa, FL 33613

Phone (813) 624-2117
Fax (800) 807-0314
E-mail bconnor@tampabay.rr.com

Minority Small Business
Contact William Connor

Kilgore Construction, LLC **Federal Number** 26-3771464

11697 Walsingham Rd.
Largo, FL 33778

Phone (727) 755-2294
Fax (727) 581-5724
E-mail jo@kilgorellc.com

Minority Small Business
Contact Harold Kilgore

JMJ Site Development, Inc **Federal Number** 27-3413832

P.O. Box 1095
Lithia, FL 33547

Phone (813) 927-2484
Fax
E-mail jmjsitedevelopment@gmail.com

Minority Small Business
Contact Jeff Joaquin

City of Tampa MBD Office

SLBE Goal Setting Firms Report

as of 6/12/2015

CONCRETE (SIDEWALKS, DRIVEWAYS, FORM & FINISH)

Allen Masonry & General Contracting, Inc. **Federal Number** 20-1580292

6215 Travis Blvd.
Tampa, FL 33610

Phone (813) 627-9231 **Minority** Small Business
Fax **Contact** Steve Allen
E-mail allenmasonrygc@gmail.com

Acclaim Service Group, Inc. **Federal Number** 36-4668231

1324 Seven Springs Blvd., #325
New Port Richey, FL 34655

Phone (727) 848-3200 **Minority** Small Business
Fax (727) 848-3211 **Contact** Jamie Jones
E-mail jamie@acclaimservicegroup.com

Quick Construction Solutions, LLC **Federal Number** 90-0972890

4501 N. Saint Vincent St.
Tampa, FL 33614

Phone (813) 377-9997 **Minority** Small Business
Fax (813) 374-5849 **Contact** Jorge Castro
E-mail quickcs@outlook.com

CONCRETE, BRICK, MASONARY

Castco Construction, Inc. **Federal Number** 59-2548614

9001 126th Ave. North
Largo, FL 33773

Phone (727) 585-4714 **Minority** Small Business
Fax (727) 585-5091 **Contact** Israel Castro
E-mail cconstr@tampabay.rr.com

Parking Lot Striping Service **Federal Number** 59-1522393

P.O. Box 11005
Tampa, FL 33680

Phone (813) 623-1454 **Minority** Small Business
Fax (813) 664-0140 **Contact** Fernando Llop
E-mail lindaplss@aol.com

Tampa Bay Construction & Engineering, Inc. **Federal Number** 59-3713572

10503 Palm Cove Ave
Tampa, FL 33647

Phone (813) 984-9898 **Minority** Small Business
Fax (813) 907-0980 **Contact** Ahmad Erchid
E-mail aerchid@tbcei.com

CONCRETE, BRICK, MASONARY

Velez Concrete Construction, Inc. — **Federal Number** 83-0373603

3926 E. Eden Roc Circle
Tampa, FL 33634

Phone (813) 493-4762
Fax (813) 882-3455
Minority Small Business
Contact John Velez
E-mail velezconcrete99@gmail.com

JNandlal Maintenance Services of Brandon, LLC — **Federal Number** 76-0821164

3008 King Phillip Way
Sefner, FL 33584

Phone (813) 679-7769
Fax (813) 654-7675
Minority Small Business
Contact James Nandlal
E-mail JamesNandlal@msn.com

Velocity Construction, Inc. — **Federal Number** 74-3082984

1320 E. 137th Ave
Tampa, FL 33613

Phone (813) 624-2117
Fax (800) 807-0314
Minority Small Business
Contact William Connor
E-mail bconnor@tampabay.rr.com

Kilgore Construction, LLC — **Federal Number** 26-3771464

11697 Walsingham Rd.
Largo, FL 33778

Phone (727) 755-2294
Fax (727) 581-5724
Minority Small Business
Contact Harold Kilgore
E-mail jo@kilgorellc.com

Acclaim Service Group, Inc. — **Federal Number** 36-4668231

1324 Seven Springs Blvd., #325
New Port Richey, FL 34655

Phone (727) 848-3200
Fax (727) 848-3211
Minority Small Business
Contact Jamie Jones
E-mail jamie@acclaimservicegroup.com

LANDSCAPING (TREES, LAWN, NEW CONSTRUCTION)

Morelli Landscaping, Inc — **Federal Number** 59-1877993

4855 162nd Avenue North
Clearwater, FL 33762

Phone (727) 535-6263
Fax (727) 536-6855
Minority Small Business
Contact Joe Morelli
E-mail vjmorelli@tampabay.rr.com

City of Tampa MBD Office

SLBE Goal Setting Firms Report

as of 6/12/2015

LANDSCAPING (TREES, LAWN, NEW CONSTRUCTION)

Infante's Services, Inc. **Federal Number** 59-3648843

18620 Gunn Hwy.
Odessa, FL 33556

Phone (813) 926-2271 **Minority** Small Business
Fax (813) 926-1431 **Contact** Renee Infante
E-mail charlotte@infanteservices.com

Bay Light, LLC d/b/a Professional Property Services **Federal Number** 59-1341451

10105 11th Street North
Tampa, FL 33612

Phone (813) 972-4057 **Minority** Small Business
Fax (813) 971-0882 **Contact** Hyacinth Robinson
E-mail paulrobinson22@msn.com

Baron's Landscaping Services, Inc. **Federal Number** 65-0837654

P.O. Box 4047
Tampa, FL 33677

Phone (813) 404-1509 **Minority** Small Business
Fax (813) 476-6255 **Contact** Randy Conte
E-mail baronslawncare@aol.com

Sunbelt Sod & Grading Company **Federal Number** 13-4250933

819 - 9th St. N.E.
Ruskin, FL 33570

Phone (813) 641-9855 **Minority** Small Business
Fax (813) 645-7263 **Contact** Lesley Silva
E-mail sunbeltsod@verizon.net

NPC Mowing & Landscaping **Federal Number** 03-0555858

P.O. Box 292873 6441 Eureka Springs Road
Tampa, FL 33687-2873

Phone (813) 967-4386 **Minority** Small Business
Fax (352) 668-3295 **Contact** John Woodhouse
E-mail Jwoodho793@aol.com

Fresh Start Development, Inc. **Federal Number** 20-3857845

P.O. Box 310592
Tampa, FL 33680

Phone (813) 758-5345 **Minority** Small Business
Fax (813) 333-5949 **Contact** Katina McClinton
E-mail freshstartdevelop@yahoo.com

City of Tampa MBD Office

SLBE Goal Setting Firms Report

as of 6/12/2015

LANDSCAPING (TREES, LAWN, NEW CONSTRUCTION)

Nelson's Tree Farm and Nursery, Inc. **Federal Number** 59-3404710

19139 Geraci Rd.
Lutz, FL 33549

Phone (813) 917-6608 **Minority** Small Business
Fax (813) 350-9139 **Contact** Kimberly Martinez
E-mail kimberly.martinez33@gmail.com

Williams Landscape Management Co., Inc. **Federal Number** 54-3516370

PO Box 311444 5711 N. 50th St.
Tampa, FL 33610

Phone (813) 628-8048 **Minority** Small Business
Fax (813) 628-8048 **Contact** Tony Williams
E-mail tonywilliams@wlmslandscape.com

On-Point Group, Inc. **Federal Number** 38-3788119

5608 Puritan Rd
Tampa, FL 33617

Phone (813) 927-2808 **Minority** Small Business
Fax (813) 374-0993 **Contact** Daphne Jones
E-mail d.jones@on-pointgroupinc.com

Pine Lake Services, Inc. **Federal Number** 27-3360158

2122 Henley Rd.
Lutz, FL 33548

Phone (813) 948-4736 **Minority** Small Business
Fax (813) 909-0386 **Contact** Maria Martinez
E-mail Ivan@pinelakeservices.com

AAJ Lawn Care Services, Inc. **Federal Number** 26-0254393

3716 E. Idlewild Avenue
Tampa, FL 33610

Phone (813) 220-8533 **Minority** Small Business
Fax (888) 277-1860 **Contact** Archie Jerry
E-mail aajlawncare@gmail.com

Gustavo Negrete d/b/a Lawns & More **Federal Number** 76-6102049

1407 Bonnie Loop
Plant City, FL 33565

Phone (813) 650-1834 **Minority** Small Business
Fax (813) 754-0282 **Contact** Gustavo Negrete
E-mail nancyostewart29@gmail.com

Breit Turf Management, LLC **Federal Number** 27-3737949

P.O. Box 13551
Tampa, FL 33681

Phone (813) 732-3221 **Minority** Small Business
Fax **Contact** Edward Breit
E-mail breitturf1@gmail.com

City of Tampa MBD Office

SLBE Goal Setting Firms Report

as of 6/12/2015

LANDSCAPING (TREES, LAWN, NEW CONSTRUCTION)

The PROS Investment Corp. **Federal Number** 59-3609725

1227 E Madison, #1003
Tampa, FL 33602

Phone (813) 230-3331 **Minority** Small Business
Fax (813) 333-2938 **Contact** Kevin Knowles
E-mail kvknowles@prosinvest.com

A J Landscaping, LLC **Federal Number** 21-0159888

P.O. Box 2381
Valrico, FL 33596

Phone (813) 643-1781 **Minority** Small Business
Fax (813) 643-1781 **Contact** Alberto Pereiro
E-mail as@aslandscapingllc.com

Alpha Field Services, LLC **Federal Number** 90-1007218

27251 Wesley Chapel Blvd # 513
Wesley Chapel, FL

Phone (813) 900-2687 **Minority** Small Business
Fax (813) 907-2810 **Contact** Lorraine Harris
E-mail support@alphafieldservices.com

JTCM Inc **Federal Number** 56-2418914

817 S MacDill Ave
Tampa, FL 33609

Phone (813) 935-7724 **Minority** Small Business
Fax (813) 935-7724 **Contact** Helen Suders
E-mail noelsuders@gmail.com

DEANS ENVIRONMENTAL SERVICES **Federal Number** 83-0461047

2126 Whispering Trails Blvd
Winter Haven, FL 33884

Phone (863) 595-8255 **Minority** Small Business
Fax (904) 791-9060 **Contact** KYLE DEAN
E-mail DEANK8859@AOL.COM

PIPE AND PIPE FITTINGS

Suca Pipe Supply, Inc. **Federal Number** 59-2499571

P.O. Box 272482
Tampa, FL 33618

Phone (813) 249-7902 **Minority** Small Business
Fax (813) 249-7384 **Contact** Secedrick McIntyre
E-mail slmau44@yahoo.com

PIPE AND PIPE FITTINGS

2 Meyer Corp. **Federal Number** 56-2384669

6308 Lake Sunrise Dr.
Apollo Beach, FL 33572

Phone (813) 645-3150 **Minority** Small Business
Fax (813) 645-5634 **Contact** Melissa Gugliotti
E-mail Renatonjr@aol.com

DRD Enterprises, LLC **Federal Number** 20-4675317

4104 Yellowwood Dr.
Valrico, FL 33594

Phone (813) 476-9933 **Minority** Small Business
Fax (866) 850-1332 **Contact** Devon Deenah
E-mail ddeenah@drdenterprise.com

Larsen Civil Construction LLC **Federal Number** 20-3567884

10456 66th Street
Pinellas Park, FL 33782

Phone (727) 547-8100 **Minority** Small Business
Fax (727) 547-8101 **Contact** Benjamin Larsen
E-mail jim@larsencivil.com

Mar Supply Co. **Federal Number** 27-0206845

1660 63rd Avenue East
Bradenton, FL 34203

Phone (941) 286-3240 **Minority** Small Business
Fax (941) 761-6500 **Contact** Raul Corona
E-mail info@marsupplyco.com

Terrell Industries, Inc. **Federal Number** 65-0530148

2067 1st Avenue N
St. Petersburg, FL 33713

Phone (727) 823-4424 **Minority** Small Business
Fax (727) 823-3977 **Contact** Grady Terrell
E-mail gterrell@verizon.net

Suca Pipe Supply, Inc. One **Federal Number** 26-3669556

4910 Lowell Road
Tampa, FL 33624

Phone (813) 249-7902 **Minority** Small Business
Fax (813) 249-7384 **Contact** Ashley McIntyre
E-mail mactwinau1@yahoo.com

ASAP Fabrication, Inc. **Federal Number** 45-4589570

5340 W. US Highway 92 W
Plant City, FL 33566

Phone (813) 752-1999 **Minority** Small Business
Fax (813) 752-1997 **Contact** Patricia Haynes
E-mail hp.hynes@asapfabrication.com

City of Tampa MBD Office

SLBE Goal Setting Firms Report

as of 6/12/2015

SURVEYORS' SERVICES

Metzger & Willard, Inc. — **Federal Number** 59-1907168

8600 Hidden River Parkway Ste. 550
Tampa, FL 33637-1033

Phone (813) 977-6055
Fax (813) 977-0593
Minority Small Business
Contact Nancy Metzger
E-mail nmetzger@metzgerwillard.com

Mills & Associates, Inc. — **Federal Number** 59-2354541

3242 Henderson Blvd. #300
Tampa, FL 33609

Phone (813) 876-5869
Fax (813) 870-0317
Minority Small Business
Contact Lawrence Mills
E-mail larry.m@millsandassoc.com

Northwest Engineering Inc. — **Federal Number** 59-2899240

8409 Sunstate St.
Tampa, FL 33634-1309

Phone (813) 889-9236
Fax (813) 886-3315
Minority Small Business
Contact Gerald Silva
E-mail jsilva@neitampa.com

Land Precision Corporation — **Federal Number** 59-3088679

2683 Sunset Point Road
Clearwater, FL 33759

Phone (727) 796-2737
Fax (727) 796-3326
Minority Small Business
Contact Vincent E. Corbitt
E-mail vcorbitt@landprecision.com

Compass Point Surveyors, PL — **Federal Number** 20-5388139

806 Franklin Street
Clearwater, FL 33756

Phone (727) 230-9606
Fax (727) 230-9234
Minority Small Business
Contact Terry Ferguson
E-mail tjd@cp-surveyors.com

Parra & Karimi Engineering, LLC (P & K Engineering) — **Federal Number** 22-3943908

2035 Camp Indianhead Rd
Land O Lakes, FL 34639

Phone (813) 988-8100
Fax (813) 988-8108
Minority Small Business
Contact Mario Parra
E-mail pkmail@pk-eng.com

Hyatt Survey Services, Inc. — **Federal Number** 03-0476653

11007 8th Avenue E.
Bradenton, FL 34212

Phone (941) 746-3903
Fax (941) 749-0166
Minority Small Business
Contact Pamela Hyatt
E-mail pam@hyatt-survey.com

City of Tampa MBD Office

SLBE Goal Setting Firms Report

as of 6/12/2015

SURVEYORS' SERVICES

D.C. Johnson & Associates, Inc. **Federal Number** 59-2214086

11911 S Curley St.
San Antonio, FL 33576

Phone (352) 588-2768
Fax (352) 588-2713
Minority Small Business
Contact Daniel Johnson
E-mail chrisxynides@dcjohnson.com

Leftcoast Surveyors, Inc. **Federal Number** 59-3655470

2363 1st Avenue North
St. Petersburg, FL 33713

Phone (727) 576-2877
Fax (727) 576-6602
Minority Small Business
Contact Mike Guiler
E-mail leftcoast@tampabay.rr.com

AJN Surveying, LLC **Federal Number** 90-0444646

4406 Flintlock Loop
Lakeland, FL 33810

Phone (813) 352-9483
Fax (813) 704-4836
Minority Small Business
Contact Alan Naumowicz
E-mail alan@ajnsurveying.com

REVOLUTION PROFESSIONAL SERVICES, INC **Federal Number** 27-4498767

25400 US Hwy 19 N, Ste 137
Clearwater, FL 33763

Phone (727) 796-8740
Fax (727) 796-8601
Minority Small Business
Contact Kathleen Lanzner
E-mail klanzner@rpspls.com

EMK Consulltants of Florida, Inc. **Federal Number** 84-1056258

7815 N. Dale Mabry Hwy, Suite 200
Tampa, FL 33614

Phone (813) 931-8900
Fax (813) 931-5848
Minority Small Business
Contact Earl Michaels
E-mail jill@emkfla.com

Sycamore Engineering, Inc. **Federal Number** 20-1479603

11435 Cypress Reserve Drive
Tampa, FL 33626

Phone (813) 889-0700
Fax (813) 889-0788
Minority Small Business
Contact Abir Khaled
E-mail akhaled@sycamoreeng.com

W.C. Sherrill and Company, LLC. **Federal Number** 61-1606347

26232 Wesley Chapel Blvd.
Lutz, FL 33559

Phone (813) 345-4270
Fax
Minority Small Business
Contact Walter Sherrill, Jr.
E-mail rick.weigl@gmail.com

SURVEYORS' SERVICES

MacSurvey, Inc. **Federal Number** 45-4022937

22091 US Highway 19 North
Clearwater, FL 33765

Phone (727) 725-3269
Fax (727) 725-3269
Minority Small Business
Contact Christopher McLaughlin
E-mail info@macsurvey.com

VIDEO SERVICES, PHOTOGRAPHY

A Business Forms & Pegboard Systems, Inc. **Federal Number** 59-1559977

123 W. Seneca Ave.
Tampa, FL 33612-6753

Phone (813) 933-2788
Fax (813) 935-9506
Minority Small Business
Contact Victoria Jorgenson
E-mail results@amediamarketing.com

Aerial Innovations, Inc. **Federal Number** 59-2802602

3703 W. Azeele St.
Tampa, FL 33609-2807

Phone (813) 254-7339
Fax (813) 254-7239
Minority Small Business
Contact Colette Eddy
E-mail colette@aerialinnovations.com

Florida Contractors Video Service **Federal Number** 65-0373535

P.O. Box 907
Valrico, FL 33594-0907

Phone (813) 737-1774
Fax (813) 737-6151
Minority Small Business
Contact Norma Oosting
E-mail FCVSinc@aol.com

Kerrick Williams Photography, LLC **Federal Number** 59-3225186

811 Hickory Glen Drive
Seffner, FL 33584

Phone (813) 571-3768
Fax (866) 571-7149
Minority Small Business
Contact Kerrick Williams
E-mail kerrick@kerrickwilliams.com

DeHa Multimedia, LLC **Federal Number** 26-0527750

P.O. Box 23532
Tampa, FL 33623

Phone (813) 340-3017
Fax (813) 891-0332
Minority Small Business
Contact Hakeem Ali
E-mail hakeem@dehamagazine.com

City of Tampa MBD Office

SLBE Goal Setting Firms Report

as of 6/12/2015

VIDEO SERVICES, PHOTOGRAPHY

Mercury Productions, Inc. **Federal Number** 59-3491905

12463 92nd Terrace
Seminole, FL 33772

Phone (813) 287-8044
Fax (813) 287-8613
E-mail bill@mercurytampabay.com

Minority Small Business
Contact William McQueen

Uppercase, Inc. **Federal Number** 26-2817255

905 North Tampa Street
Tampa, FL 33602

Phone (813) 226-3096
Fax
E-mail matt@uppercaseincorporated.com

Minority Small Business
Contact Matthew Morgan

The Webb Works **Federal Number** 55-0870869

3421 South Gardenia Drive
Tampa, FL 33629

Phone (813) 817-9840
Fax
E-mail jim@thewebbworks.com

Minority Small Business
Contact James Webb

SLBE Contract Goal

Goal
17.7%

Subcontract Goal Contact List: SLBEs and Underutilized WMBEs
(**The Underutilized WMBE Industry Category for Subcontracts is Construction - BBE Certified)

Project 15-C-00046 (Furnish and Install Misc. Water/Stormwater Mains 2" - 48", FY 16)

# Of Firms	Company Name	Federal Number	Address	Phone Number	SLBE/WMBE CLASS	City, State, Zip Code	Fax Number	Contact Name	Contact Email
1	2 Meyer Corp.	56-2384669	6308 Lake Sunrise Dr.	(813) 645-3150	Small Business	Apollo Beach, FL 33572	(813) 645-5634	Melissa Gugliotti	Renatonjr@aol.com
2	A Business Forms & Pegboard Systems, Inc.	59-1559977	123 W. Seneca Ave.	(813) 933-2788	Small Business	Tampa, FL 33612-6753	(813) 935-9506	Victoria Jorgenson	results@amediamarketing.com
3	A J Landscaping, LLC	21-0159888	P.O. Box 2381	(813) 643-1781	Small Business	Valrico, FL 33596	(813) 643-1781	Alberto Pereiro	as@aslandscapingllc.com
4	AAJ Lawn Care Services, Inc.	26-0254393	3716 E. Idlewild Avenue	(813) 220-8533	**SLBE/BBE**	Tampa, FL 33610	(888) 277-1860	Archie Jerry	aajlawncare@gmail.com
5	Acclaim Service Group, Inc.	36-4668231	1324 Seven Springs Blvd., #325	(727) 848-3200	Small Business	New Port Richey, FL 34655	(727) 848-3211	Jamie Jones	jamie@acclaimservicegroup.com
6	Aerial Innovations, Inc.	59-2802602	3703 W. Azeele St.	(813) 254-7339	Small Business	Tampa, FL 33609-2807	(813) 254-7239	Colette Eddy	colette@aerialinnovations.com
7	AJN Surveying, LLC	90-0444646	4406 Flintlock Loop	(813) 352-9483	Small Business	Lakeland, FL 33810	(813) 704-4836	Alan Naumowicz	alan@ajnsurveying.com
8	Allen Masonry & General Contracting, Inc.	20-1580292	6215 Travis Blvd.	(813) 627-9231	**SLBE/BBE**	Tampa, FL 33610		Steve Allen	allenmasonrygc@gmail.com
9	Alpha Field Services, LLC	90-1007218	27251 Wesley Chapel Blvd # 513	(813) 900-2687	**SLBE/BBE**	Wesley Chapel, FL	(813) 907-2810	Lorraine Harris	support@alphafieldservices.com
10	ASAP Fabrication, Inc.	45-4589570	5340 W. US Highway 92 W	(813) 752-1999	Small Business	Plant City, FL 33566	(813) 752-1997	Patricia Haynes	hp.hynes@asapfabrication.com
11	Baron's Landscaping Services, Inc.	65-0837654	P.O. Box 4047	(813) 404-1509	Small Business	Tampa, FL 33677	(813) 476-6255	Randy Conte	baronslawncare@aol.com
12	Bay Light, LLC d/b/a Professional Property Services	59-1341451	10105 11th Street North	(813) 972-4057	**SLBE/BBE**	Tampa, FL 33612	(813) 971-0882	Hyacinth Robinson	paulrobinson22@msn.com

****Note: For this Bid, WMBE firms certified as African American/Black Business Enterprises (BBE) may count toward the subcontract goal. Refer to MBD Form 70-Procurement Guidelines**

Report Date: June 12, 2015

Subcontract Goal Contact List: SLBEs and Underutilized WMBEs
(**The Underutilized WMBE Industry Category for Subcontracts is Construction - BBE Certified)

Project 15-C-00046 (Furnish and Install Misc. Water/Stormwater Mains 2" - 48", FY 16)

# Of Firms	Company Name	Federal Number	Address	Phone Number	SLBE/WMBE CLASS	City, State, Zip Code	Fax Number	Contact Name	Contact Email
13	Breit Turf Management, LLC	27-3737949	P.O. Box 13551	(813) 732-3221	Small Business	Tampa, FL 33681		Edward Breit	breitturf1@gmail.com
14	BUN Construction Co., Inc.	59-3362663	4202 E. Martin Luther King Blvd.	(813) 931-8270	Small Business	Tampa, FL 33610	(813) 931-9185	Bart Nwagbuo	bunconstruction@tampabay.rr.com
15	Castco Construction, Inc.	59-2548614	9001 126th Ave. North	(727) 585-4714	Small Business	Largo, FL 33773	(727) 585-5091	Israel Castro	cconstr@tampabay.rr.com
16	Compass Point Surveyors, PL	20-5388139	806 Franklin Street	(727) 230-9606	Small Business	Clearwater, FL 33756	(727) 230-9234	Terry Ferguson	tjd@cp-surveyors.com
17	D.C. Johnson & Associates, Inc.	59-2214086	11911 S Curley St.	(352) 588-2768	Small Business	San Antonio, FL 33576	(352) 588-2713	Daniel Johnson	chrisxynides@dcjohnson.com
18	DEANS ENVIRONMENTAL SERVICES	83-0461047	2126 Whispering Trails Blvd	(863) 595-8255	**SLBE/BBE**	Winter Haven, FL 33884	(904) 791-9060	KYLE DEAN	DEANK8859@AOL.COM
19	DeHa Multimedia, LLC	26-0527750	P.O. Box 23532	(813) 340-3017	**SLBE/BBE**	Tampa, FL 33623	(813) 891-0332	Hakeem Ali	hakeem@dehamagazine.com
20	Denson Construction, Inc.	59-3571944	P.O. Box 3081	(863) 709-1001	**African American**	Plant City, FL 33564	(863) 709-1071	Ralph (Pete) Denson	Pete@denson-construction.com
21	DRD Enterprises, LLC	20-4675317	4104 Yellowwood Dr.	(813) 476-9933	**SLBE/BBE**	Valrico, FL 33594	(866) 850-1332	Devon Deenah	ddeenah@drdenterprise.com
22	E.S. Concrete Services, Inc.	59-3119582	726 East Harbor Dr. South	(727) 821-5029	**SLBE/BBE**	St. Petersburg, FL 33705	(727) 821-5029	Enoris Sly	enorisslysr@yahoo.com
23	EMK Consulltants of Florida, Inc.	84-1056258	7815 N. Dale Mabry Hwy, Suite 200	(813) 931-8900	Small Business	Tampa, FL 33614	(813) 931-5848	Earl Michaels	jill@emkfla.com
24	Excel 4, LLC	45-4149326	P.O. Box 4475	(407) 480-8976	**African American**	Winter Park, FL 32793		Cleo Davis	excel4llc@yahoo.com

****Note: For this Bid, WMBE firms certified as African American/Black Business Enterprises (BBE) may count toward the subcontract goal. Refer to MBD Form 70-Procurement Guidelines**

Report Date: June 12, 2015

Subcontract Goal Contact List: SLBEs and Underutilized WMBEs
(**The Underutilized WMBE Industry Category for Subcontracts is Construction - BBE Certified)

Project 15-C-00046 (Furnish and Install Misc. Water/Stormwater Mains 2" - 48", FY 16)

# Of Firms	Company Name	Federal Number	Address	Phone Number	SLBE/WMBE CLASS	City, State, Zip Code	Fax Number	Contact Name	Contact Email
25	Florida Contractors Video Service	65-0373535	P.O. Box 907	(813) 737-1774	Small Business	Valrico, FL 33594-0907	(813) 737-6151	Norma Oosting	FCVSinc@aol.com
26	Fresh Start Development, Inc.	20-3857845	P.O. Box 310592	(813) 758-5345	**SLBE/BBE**	Tampa, FL 33680	(813) 333-5949	Katina McClinton	freshstartdevelop@yahoo.com
27	Gustavo Negrete d/b/a Lawns & More	76-6102049	1407 Bonnie Loop	(813) 650-1834	Small Business	Plant City, FL 33565	(813) 754-0282	Gustavo Negrete	nancyostewart29@gmail.com
28	Horus Construction Services	59-3675651	P.O. Box 10667	(727) 898-6877	**African American**	St. Petersburg, FL 33733	(727) 898-6896	James Graham, Jr.	horuscons1@juno.com
29	Hyatt Survey Services, Inc.	03-0476653	11007 8th Avenue E.	(941) 746-3903	Small Business	Bradenton, FL 34212	(941) 749-0166	Pamela Hyatt	pam@hyatt-survey.com
30	Infante's Services, Inc.	59-3648843	18620 Gunn Hwy.	(813) 926-2271	Small Business	Odessa, FL 33556	(813) 926-1431	Renee Infante	charlotte@infanteservices.com
31	JMJ Site Development, Inc	27-3413832	P.O. Box 1095	(813) 927-2484	Small Business	Lithia, FL 33547		Jeff Joaquin	jmjsitedevelopment@gmail.com
32	JNandlal Maintenance Services of Brandon, LLC	76-0821164	3008 King Phillip Way	(813) 679-7769	Small Business	Sefner, FL 33584	(813) 654-7675	James Nandlal	JamesNandlal@msn.com
33	Johnson's Excavation & Services, Inc.	59-3031174	1706 East Trapnell Road	(813) 752-7097	Small Business	Plant City, FL 33566	(813) 719-9052	Donathan Johnson	sales@jescontracting.com
34	JTCM Inc	56-2418914	817 S MacDill Ave	(813) 935-7724	Small Business	Tampa, FL 33609	(813) 935-7724	Helen Suders	noelsuders@gmail.com
35	Kerrick Williams Photography, LLC	59-3225186	811 Hickory Glen Drive	(813) 571-3768	**SLBE/BBE**	Seffner, FL 33584	(866) 571-7149	Kerrick Williams	kerrick@kerrickwilliams.com
36	Kilgore Construction, LLC	26-3771464	11697 Walsingham Rd.	(727) 755-2294	Small Business	Largo, FL 33778	(727) 581-5724	Harold Kilgore	jo@kilgorellc.com

****Note: For this Bid, WMBE firms certified as African American/Black Business Enterprises (BBE) may count toward the subcontract goal. Refer to MBD Form 70-Procurement Guidelines**

Report Date: June 12, 2015

Subcontract Goal Contact List: SLBEs and Underutilized WMBEs
(**The Underutilized WMBE Industry Category for Subcontracts is Construction - BBE Certified)

Project 15-C-00046 (Furnish and Install Misc. Water/Stormwater Mains 2" - 48", FY 16)

# Of Firms	Company Name	Federal Number	Address	Phone Number	SLBE/WMBE CLASS	City, State, Zip Code	Fax Number	Contact Name	Contact Email
37	Land Precision Corporation	59-3088679	2683 Sunset Point Road	(727) 796-2737	Small Business	Clearwater, FL 33759	(727) 796-3326	Vincent E. Corbitt	vcorbitt@landprecision.com
38	Larsen Civil Construction LLC	20-3567884	10456 66th Street	(727) 547-8100	Small Business	Pinellas Park, FL 33782	(727) 547-8101	Benjamin Larsen	jim@larsencivil.com
39	Leftcoast Surveyors, Inc.	59-3655470	2363 1st Avenue North	(727) 576-2877	Small Business	St. Petersburg, FL 33713	(727) 576-6602	Mike Guiler	leftcoast@tampabay.rr.com
40	L.S. Curb Service, Inc.	59-3252745	4206 James L. Redman Pkwy	(813) 737-1524	**African American**	Plant City, FL 33567	(813) 650-8654	Leaford Shakes	lshakes@lscurb.com
41	MacSurvey, Inc.	45-4022937	22091 US Highway 19 North	(727) 725-3269	Small Business	Clearwater, FL 33765	(727) 725-3269	Christopher McLaughlin	info@macsurvey.com
42	Mar Supply Co.	27-0206845	1660 63rd Avenue East	(941) 286-3240	Small Business	Bradenton, FL 34203	(941) 761-6500	Raul Corona	info@marsupplyco.com
43	Mason Global LLC	47-1844251	6133 Lanshire Dr	(813) 323-3648	**African American**	Tampa, FL 33634		Alan Robinson	alan@masongloballlc.com
44	Mend It Asphalt & Concrete Services, Inc.	59-3274522	4915 15th Avenue South	(727) 327-7784	Small Business	Gulfport, FL 33707	(727) 327-4504	Robert Mendez	menditasphaltconcrete@yahoo.com
45	Mercury Productions, Inc.	59-3491905	12463 92nd Terrace	(813) 287-8044	Small Business	Seminole, FL 33772	(813) 287-8613	William McQueen	bill@mercurytampabay.com
46	Metzger & Willard, Inc.	59-1907168	8600 Hidden River Parkway Ste. 550	(813) 977-6055	Small Business	Tampa, FL 33637-1033	(813) 977-0593	Nancy Metzger	nmetzger@metzgerwillard.com
47	Mills & Associates, Inc.	59-2354541	3242 Henderson Blvd. #300	(813) 876-5869	Small Business	Tampa, FL 33609	(813) 870-0317	Lawrence Mills	larry.m@millsandassoc.com
48	MIMS Construction Company	59-3442318	P.O. Box 681554	(407) 298-6936	**African American**	Orlando, FL 32868-1554	(407) 290-1217	Lyndell Mims	lynn@mimsconstruction.com

****Note: For this Bid, WMBE firms certified as African American/Black Business Enterprises (BBE) may count toward the subcontract goal. Refer to MBD Form 70-Procurement Guidelines**

Report Date: June 12, 2015

Subcontract Goal Contact List: SLBEs and Underutilized WMBEs
(**The Underutilized WMBE Industry Category for Subcontracts is Construction - BBE Certified)

Project 15-C-00046 (Furnish and Install Misc. Water/Stormwater Mains 2" - 48", FY 16)

# Of Firms	Company Name	Federal Number	Address	Phone Number	SLBE/WMBE CLASS	City, State, Zip Code	Fax Number	Contact Name	Contact Email
49	Morelli Landscaping, Inc	59-1877993	4855 162nd Avenue North	(727) 535-6263	Small Business	Clearwater, FL 33762	(727) 536-6855	Joe Morelli	vjmorelli@tampabay.rr.com
50	Nelson's Tree Farm and Nursery, Inc.	59-3404710	19139 Geraci Rd.	(813) 917-6608	Small Business	Lutz, FL 33549	(813) 350-9139	Kimberly Martinez	kimberly.martinez33@gmail.com
51	Northwest Engineering Inc.	59-2899240	8409 Sunstate St.	(813) 889-9236	Small Business	Tampa, FL 33634-1309	(813) 886-3315	Gerald Silva	jsilva@neitampa.com
52	NPC Mowing & Landscaping	03-0555858	P.O. Box 292873 6441 Eureka Springs Road	(813) 967-4386	Small Business	Tampa, FL 33687-2873	(352) 668-3295	John Woodhouse	Jwoodho793@aol.com
53	On-Point Group, Inc.	38-3788119	5608 Puritan Rd	(813) 927-2808	**SLBE/BBE**	Tampa, FL 33617	(813) 374-0993	Daphne Jones	d.jones@on-pointgroupinc.com
54	Paragon Building Contractors, Inc.	59-2464751	1201 W. Waters Ave	(813) 935-1600	**African American**	Tampa, FL 33604	(813) 932-1108	Al Davis	paragonb@tampabay.rr.com
55	Parking Lot Striping Service	59-1522393	P.O. Box 11005	(813) 623-1454	Small Business	Tampa, FL 33680	(813) 664-0140	Fernando Llop	lindaplss@aol.com
56	Parra & Karimi Engineering, LLC (P & K Engineering)	22-3943908	2035 Camp Indianhead Rd	(813) 988-8100	Small Business	Land O Lakes, FL 34639	(813) 988-8108	Mario Parra	pkmail@pk-eng.com
57	Pine Lake Services, Inc.	27-3360158	2122 Henley Rd.	(813) 948-4736	Small Business	Lutz, FL 33548	(813) 909-0386	Maria Martinez	Ivan@pinelakeservices.com
58	Premier Florida Industrial Services, Inc.	45-3577380	4916 W. Linebaugh Ave., Ste. 103	(813) 569-0412	Small Business	Tampa, FL 33624	(813) 569-0413	Paul Pinet	pj@premier-florida.com
59	Quick Construction Solutions, LLC	90-0972890	4501 N. Saint Vincent St.	(813) 377-9997	Small Business	Tampa, FL 33614	(813) 374-5849	Jorge Castro	quickcs@outlook.com

****Note: For this Bid, WMBE firms certified as African American/Black Business Enterprises (BBE) may count toward the subcontract goal. Refer to MBD Form 70-Procurement Guidelines**

Report Date: June 12, 2015

Subcontract Goal Contact List: SLBEs and Underutilized WMBEs
(**The Underutilized WMBE Industry Category for Subcontracts is Construction - BBE Certified)

Project 15-C-00046 (Furnish and Install Misc. Water/Stormwater Mains 2" - 48", FY 16)

# Of Firms	Company Name	Federal Number	Address	Phone Number	SLBE/WMBE CLASS	City, State, Zip Code	Fax Number	Contact Name	Contact Email
60	REVOLUTION PROFESSIONAL SERVICES, INC	27-4498767	25400 US Hwy 19 N, Ste 137	(727) 796-8740	Small Business	Clearwater, FL 33763	(727) 796-8601	Kathleen Lanzner	klanzner@rpspls.com
61	Spectra Engineering and Research, Inc.	59-3009648	1060 Maitland Center Commons, Suite 340	(407) 951-8844	**African American**	1060 Maitland Center Commons, Suite 340	(407) 951-8845	Peter Okonkwo	spectra@spectraengr.com
62	Suca Pipe Supply, Inc.	59-2499571	P.O. Box 272482	(813) 249-7902	**SLBE/BBE**	Tampa, FL 33618	(813) 249-7384	Secedrick McIntyre	slmau44@yahoo.com
63	**Suca Pipe Supply, Inc. One**	26-3669556	4910 Lowell Road	(813) 249-7902	**SLBE/BBE**	Tampa, FL 33624	(813) 249-7384	Ashley McIntyre	mactwinau1@yahoo.com
64	Sunbelt Sod & Grading Company	13-4250933	819 - 9th St. N.E.	(813) 641-9855	Small Business	Ruskin, FL 33570	(813) 645-7263	Lesley Silva	sunbeltsod@verizon.net
65	Sunrise Utility Construction, Inc.	59-3034012	P.O. Box 272293	(813) 949-3749	Small Business	Tampa, FL 33688-2293	(813) 949-0408	Lisa Nehrboss	LMNBOSS@AOL.COM
66	Superior Construction & Contracting, LLC	27-0679204	4402 Osborne Ave	(813) 712-7325	Small Business	Tampa, FL 33614	(813) 868-1163	Michael Strouse	jmartinez@superiorflorida.net
67	Sycamore Engineering, Inc.	20-1479603	11435 Cypress Reserve Drive	(813) 889-0700	Small Business	Tampa, FL 33626	(813) 889-0788	Abir Khaled	akhaled@sycamoreeng.com
68	Tagarelli Construction, Inc.	59-3339407	P.O. Box 681	(727) 937-6171	Small Business	Tarpon Springs, FL 34689	(727) 937-6172	Michael Tagarelli	tagarelli@verizon.net
69	Tampa Bay Construction & Engineering, Inc.	59-3713572	10503 Palm Cove Ave	(813) 984-9898	Small Business	Tampa, FL 33647	(813) 907-0980	Ahmad Erchid	aerchid@tbcei.com
70	Terrell Industries, Inc.	65-0530148	2067 1st Avenue N	(727) 823-4424	**SLBE/BBE**	St. Petersburg, FL 33713	(727) 823-3977	Grady Terrell	gterrell@verizon.net
71	The PROS Investment Corp.	59-3609725	1227 E Madison, #1003	(813) 230-3331	Small Business	Tampa, FL 33602	(813) 333-2938	Kevin Knowles	kvknowles@prosinvest.com

****Note: For this Bid, WMBE firms certified as African American/Black Business Enterprises (BBE) may count toward the subcontract goal. Refer to MBD Form 70-Procurement Guidelines**

Report Date: June 12, 2015

Subcontract Goal Contact List: SLBEs and Underutilized WMBEs
(**The Underutilized WMBE Industry Category for Subcontracts is Construction - BBE Certified)

Project 15-C-00046 (Furnish and Install Misc. Water/Stormwater Mains 2" - 48", FY 16)

# Of Firms	Company Name	Federal Number	Address	Phone Number	SLBE/WMBE CLASS	City, State, Zip Code	Fax Number	Contact Name	Contact Email
72	The Webb Works	55-0870869	3421 South Gardenia Drive	(813) 817-9840	**SLBE/BBE**	Tampa, FL 33629		James Webb	jim@thewebbworks.com
73	Uppercase, Inc.	26-2817255	905 North Tampa Street	(813) 226-3096	Small Business	Tampa, FL 33602		Matthew Morgan	matt@uppercaseincorporated.com
74	Velez Concrete Construction, Inc.	83-0373603	3926 E. Eden Roc Circle	(813) 493-4762	Small Business	Tampa, FL 33634	(813) 882-3455	John Velez	velezconcrete99@gmail.com
75	Velocity Construction, Inc.	74-3082984	1320 E. 137th Ave	(813) 624-2117	Small Business	Tampa, FL 33613	(800) 807-0314	William Connor	bconnor@tampabay.rr.com
76	W.C. Sherrill and Company, LLC.	61-1606347	26232 Wesley Chapel Blvd.	(813) 345-4270	Small Business	Lutz, FL 33559		Walter Sherrill, Jr.	rick.weigl@gmail.com
77	Williams Landscape Management Co., Inc.	54-3516370	PO Box 311444 5711 N. 50th St.	(813) 628-8048	Small Business	Tampa, FL 33610	(813) 628-8048	Tony Williams	tonywilliams@wlmslandscape.com

****Note: For this Bid, WMBE firms certified as African American/Black Business Enterprises (BBE) may count toward the subcontract goal. Refer to MBD Form 70-Procurement Guidelines**

Report Date: June 12, 2015

Instructions Regarding Use of the SLBE Goal Setting List

Bidders must solicit a subcontracting bid from ALL of the firms listed on the SLBEs list provided on the City's web site, and provide documentation of emails, faxes, phone calls, letters, or other communication with the firms a first step in demonstrating Good-Faith Efforts to achieve the goal set for SLBE participation on this contract.

The list is formatted to facilitate e-mailing of a solicitation to the listed firms by copying and pasting the email addresses.

The SLBE participation Goal is based upon the availability of the certified firms indicated on the attached list. The Goal and Requirements of the City's Equal Business Opportunity Program are stated in the Bid/Contract Document, Specifications.

SOLICITATION FOR SUBCONTRACTOR QUOTES

From:
OUR COMPANY NAME:
TELEPHONE NUMBER:
ADDRESS:
FAX NUMBER:
E-MAIL ADDRESS:

To Subcontractor:

Our firm is in the process of preparing a bid for a **City of Tampa Contract**. Please accept this notice as our request for quotes for the scope of work identified below. Please respond to this request by filling in the information below and returning via e-mail or fax to the address or number provided. Please contact us if you need any assistance in obtaining bonding, lines of credit, insurance, assistance in obtaining necessary equipment, supplies, materials, participation in a City-sponsored mentor-protégé program, or if you have any questions.

Plans and Specs for this project are posted at:
http://www.tampagov.net/dept_contract_administration/programs_and_services/construction_project_bidding/

CONTRACT NO.:
CONTRACT NAME:
CITY'S BID OPENING DATE:
DEADLINE FOR YOUR SUBCONTRACTOR BID OR RESPONSE:
SPECIFIC SCOPE OF WORK:

Please complete and submit with your subcontract bid or response:
YOUR FIRM'S NAME:
MAILING ADDRESS:
CITY:
STATE:
ZIP:
FAX NUMBER:
E-MAIL ADDRESS:
__Yes, my company is interested in quoting this project for the following items of work:

__No, my company will not quote this project for the following reason(s):

(Sample Suggested Sub Solicitation 3-9-9 Tampa MBDO)

Contract 15-C-00046; Furnish and Install Miscellaneous Water & Stormwater Mains 2"-48" Diameter - FY16

PROPOSAL

To the Mayor and City Council of the City of Tampa, Florida:

Name of Bidder _____

_____
Business Phone Number and Email Address

_____
Business Name and Mailing Address

_____
Phone Number and Name of Contact Regarding Permits

_____
Contractor/Qualifiers Name and Federal Identification Number

Date of Proposal _____

(If Bidder is a firm, fill in the following blanks):

Names and Residential Addresses of Partners

_____

_____

(If Bidder is a corporation, fill in the following blanks):

Organized under the laws of the State of _____

Names and Address of President

_____

_____

Name and Address of Vice President

_____

_____

Name and Address of Secretary

_____

_____

Names and Address of Treasurer

_____

_____

The above-named Bidder affirms and declares:

(1) That the Bidder is of lawful age and that no other person, firm or corporation has any interest in this Proposal or in the Contract proposed to be entered into.

(2) That this Proposal is made without any understanding, agreement or connection with any other person, firm, or corporation making Proposal for the same purposes, and is in all respects fair and without collusion or fraud.

(3) That the Bidder is not in arrears to the City of Tampa, upon debt or contract, and is not a defaulter, as surety or otherwise, upon any obligation to the City of Tampa.

(4) That no officer or employee or person whose salary is payable in whole or in part from the City Treasury is, shall be or become interested, directly or indirectly, as a contracting party, partner, stockholder, surety or otherwise, in this Proposal, or in the performance of the Contract, or in the supplies, materials, or equipment and work or labor to which it relates, or in any portion of the profits thereof.

(5) That the Bidder has carefully examined the site of the work and that, from his own investigations, he has satisfied himself as to the nature and location of the work, the character, quality, and quantity of materials and the kinds and extent of equipment and other facilities needed for the performance of the work, the general and local conditions and all difficulties to be encountered, and all other items which may, in any way, affect the work or its performance.

(6) That the Bidder

_____ Has; Treasury Number _____

_____ Has not
(Check applicable box)

previously performed work under the President's Executive Order Nos. 11246 and 11375.

(7) That the undersigned, as Bidder, also declares that he has carefully examined and fully understands all the component parts of the Contract Documents and agrees that he will execute the Contract and finish the required Performance Bond and will completely perform the work in strict accordance with the terms of the Contract and the Contract Documents therein referred to for the following prices, to wit:

Item No.	Description	Unit	Approx. Quantity	Unit Price in Words		Unit Price		Total Computed Price
	SCHEDULE A - WATER - MAJOR PROJECTS PAY ITEMS							
2100	F&I 4" ductile iron pipe with 5' trench or less	LF	1000		$		$	
2101	F&I 4" ductile iron pipe with more than 5' trench	LF	1000		$		$	
2102	F&I 6" ductile iron pipe with 5' trench or less	LF	40,000		$		$	
2103	F&I 6" ductile iron pipe with more than 5' trench	LF	2,000		$		$	
2104	F&I 8" ductile iron pipe with 5' trench or less	LF	6,000		$		$	
2105	F&I 8" ductile iron pipe with more than 5' trench	LF	2,000		$		$	
2106	F&I 12" ductile iron pipe with 5' trench or less	LF	4,000		$		$	
2107	F&I 12" ductile iron pipe with more than 5' trench	LF	2,000		$		$	
2108	F&I 16" ductile iron with more than 5' trench	LF	2000		$		$	
2109	F&I 20" ductile iron with more than 5' trench	LF	500		$		$	
2110	F&I 24" ductile iron with more than 5' trench	LF	1000		$		$	
2111	F&I 30" ductile iron with more than 5' trench	LF	500		$		$	
2112	F&I 36" ductile iron with more than 5' trench	LF	600		$		$	
2113	F&I 42" ductile iron with more than 5' trench	LF	200		$		$	
2114	F&I 48" ductile iron with more than 5' trench	LF	2500		$		$	
2150	F&I 2" PVC pipe and fittings at various depths	LF	500		$		$	

Item No.	Description	Unit	Approx. Quantity	Unit Price in Words		Unit Price		Total Computed Price
2151	F&I 4" PVC pipe with 5' trench or less	LF	500		$		$	
2152	F&I 4" PVC pipe with more than 5' trench	LF	100		$		$	
2153	F&I 6" PVC pipe with 5' trench or less	LF	500		$		$	
2154	F&I 6" PVC pipe with more than 5' trench	LF	100		$		$	
2155	F&I 8" PVC pipe with 5' trench or less	LF	300		$		$	
2156	F&I 8" PVC pipe with more than 5' trench	LF	100		$		$	
2157	F&I 12" PVC pipe with more than 5' trench	LF	200		$		$	
2158	F&I 16" PVC pipe with more than 5' trench	LF	200		$		$	
2159	F&I 6" EagleLok or CertaLok restrained joint PVC pipe	LF	200		$		$	
2160	F&I 8" EagleLok or CertaLok restrained joint PVC pipe	LF	200		$		$	
2161	F&I 12" EagleLok or CertaLok restrained joint PVC pipe	LF	300		$		$	
2162	F&I 16" EagleLok or CertaLok restrained joint PVC pipe	LF	200		$		$	
2200	F&I 2" HDPE tubing by HDD w/HDPE adapters and HDPE fittings at various depths	LF	200		$		$	
2201	F&I 4" HDPE pipe by HDD w/HDPE adapters and HDPE fittings at various depths	LF	300		$		$	
2202	F&I 6" HDPE pipe by HDD w/HDPE adapters and HDPE fittings at various depths	LF	800		$		$	
2203	F&I 8" HDPE pipe by HDD w/HDPE adapters and HDPE fittings at various depths	LF	800		$		$	

Item No.	Description	Unit	Approx. Quantity	Unit Price in Words		Unit Price		Total Computed Price
2204	F&I 10" HDPE pipe by HDD w/HDPE adapters and HDPE fittings at various depths	LF	300		$		$	
2205	F&I 12" HDPE pipe by HDD w/HDPE adapters and HDPE fittings at various depths	LF	600		$		$	
2206	F&I 14" HDPE pipe by HDD w/HDPE adapters and HDPE fittings at various depths	LF	200		$		$	
2300	Furnish install remove 2" temporary services lines	LF	50		$		$	
2400	Furnish & install 4" OD steel casing pipe	LF	100		$		$	
2401	Furnish & install 12" OD steel casing pipe	LF	200		$		$	
2402	Furnish & install 14" OD steel casing pipe	LF	125		$		$	
2403	Furnish & install 16" OD steel casing pipe	LF	200		$		$	
2404	Furnish & install 20" OD steel casing pipe	LF	125		$		$	
2405	Furnish & install 24" OD steel casing pipe	LF	125		$		$	
2406	Furnish & install 30" OD steel casing pipe	LF	125		$		$	
2407	Furnish & install 36" OD steel casing pipe	LF	200		$		$	
2408	Furnish & install 42" OD steel casing pipe	LF	125		$		$	
2409	Furnish & install 48" OD steel casing pipe	LF	200		$		$	
2410	Furnish & install 54" OD Steel casing pipe	LF	50		$		$	
2500	Removal of abandoned pipe 3" and smaller in diameter	LF	100		$		$	
2501	Removal of abandoned pipe 4" - 10" in diameter	LF	1000		$		$	
2502	Removal of abandoned pipe 12" and larger in diameter	LF	1000		$		$	

Item No.	Description	Unit	Approx. Quantity	Unit Price in Words		Unit Price		Total Computed Price
2600	Cut and plug 3" and smaller in diameter pipe	EA	50		$		$	
2601	Cut and plug 4", 6" and 8" diameter pipe	EA	25		$		$	
2602	Cut and plug 10", 12" and 16" diameter pipe	EA	25		$		$	
2700	Furnish and push 4" to 8" ductile iron pipe under root system	LF	500		$		$	
2800	Make tap and furnish materials to connect 3" and smaller water mains to new/existing mains (0-15 ft. in length)	EA	50		$		$	
2801	Make tap and furnish materials to connect 3" and smaller water mains to new/existing mains (more than 15 ft. in length)	EA	50		$		$	

Item No.	Description	Unit	Approx. Quantity	Unit Price in Words		Unit Price		Total Computed Price
3000	F&I 4" wedge-action or flange restraint	EA	400					
3001	F&I 6" wedge-action or flange restraint	EA	3,000		$		$	
3002	F&I 8" wedge-action or flange restraint	EA	2000		$		$	
3003	F&I 12" wedge-action or flange restraint	EA	400		$		$	
3004	F&I 16" wedge-action or flange restraint	EA	200		$		$	
3005	F&I 20" wedge-action or flange restraint	EA	100		$		$	
3006	F&I 24" wedge-action or flange restraint	EA	100		$		$	
3007	F&I 30" wedge-action or flange restraint	EA	50		$		$	
3008	F&I 36" wedge-action or flange restraint	EA	50		$		$	
3009	F&I 42" wedge-action or flange restraint	EA	50		$		$	
3010	F&I 48" wedge-action or flange restraint	EA	50		$		$	
3030	F&I 20" manufactured restrained joints	EA	10		$		$	
3031	F&I 24" manufactured restrained joints	EA	10		$		$	
3032	F&I 30" manufactured restrained joints	EA	10		$		$	
3033	F&I 36" manufactured restrained joints	EA	10		$		$	
3034	F&I 42" Manufactured restrained joints	EA	10		$		$	
3035	F&I 48" Manufactured restrained joints	EA	300		$		$	
3040	Furnish & install 4" bell and MJ restraint on existing pipe	EA	25		$		$	
3041	Furnish & install 6" bell and MJ restraint on existing pipe	EA	50		$		$	

Item No.	Description	Unit	Approx. Quantity	Unit Price in Words		Unit Price		Total Computed Price
3042	Furnish & install 8" bell and MJ restraint on existing pipe	EA	50		$		$	
3043	Furnish & install 12" bell and MJ restraint on existing pipe	EA	50		$		$	
3044	Furnish & install 16" bell and MJ restraint on existing pipe	EA	50		$		$	
3050	Furnish & install 4" wedge-action MJ restraints on new PVC pipe	EA	20		$		$	
3051	Furnish & install 6" wedge-action MJ restraints on new PVC pipe	EA	20		$		$	
3052	Furnish & install 8" wedge-action MJ restraints on new PVC pipe	EA	20		$		$	
3053	Furnish & install 12" wedge-action MJ restraints on new PVC pipe	EA	20		$		$	
3054	Furnish & install 16" wedge-action MJ restraints on new PVC pipe	EA	20		$		$	
3070	Furnish 4" push-on restraint gaskets	EA	50		$		$	
3071	Furnish 6" push-on restraint gaskets	EA	600		$		$	
3072	Furnish 8" push-on restrain gaskets	EA	350		$		$	
3073	Furnish 12" push-on restraint gaskets	EA	300		$		$	
3074	Furnish 16" push-on restraint gaskets	EA	100		$		$	
3075	Furnish 20" push-on restraint gaskets	EA	25		$		$	
3076	Furnish 24" push-on restraint gaskets	EA	25		$		$	
3077	Furnish 30" push-on restraint gaskets	EA	30		$		$	
3078	Furnish 36" push-on restrain gaskets	EA	25		$		$	
4000	F&I 4" ductile iron plug or cap w/DIP, CIP or PVCP	EA	10		$		$	
4001	F&I 4" ductile iron bends, offsets, sleeves or reducers w/DIP, CIP or PVCP	EA	20		$		$	

Item No.	Description	Unit	Approx. Quantity	Unit Price in Words		Unit Price		Total Computed Price
4002	F&I 4" ductile iron tee w/DIP, CIP or PVCP	EA	5		$		$	
4003	F&I 4" ductile iron cross w/DIP, CIP or PVCP	EA	2		$		$	
4004	F&I 6" ductile iron plug or cap w/ DIP, CIP or PVCP	EA	100		$		$	
4005	F&I 6" ductile iron bends, offset, sleeves or reducers w/ DIP, CIP or PVCP	EA	650		$		$	
4006	F&I 6" ductile iron tee w/ DIP, CIP or PVC	EA	500		$		$	
4007	F&I 6" ductile iron cross w/ DIP, CIP or PVCP	EA	5		$		$	
4008	F&I 8" ductile iron plug or cap w/ DIP, CIP or PVCP	EA	100		$		$	
4009	F&I 8" ductile iron bends, offsets, sleeves or reducers w/ DIP, CIP or PVCP	EA	300		$		$	
4010	F&I 8" ductile iron tee w/ DIP, CIP or PVC	EA	100		$		$	
4011	F&I 8" ductile iron cross w/ DIP, CIP or PVCP	EA	20		$		$	
4012	F&I 12" ductile iron plug or cap w/ DIP, CI or PVCP	EA	10		$		$	
4013	F&I 12" bends, offsets, sleeves or reducers with DIP , CIP or PVCP	EA	200		$		$	
4014	F&I 12" ductile iron tee with DIP, CIP or PVCP	EA	40		$		$	
4015	F&I 12" ductile iron cross w/ DIP, CIP or PVCP	EA	5		$		$	
4016	F&I 16" ductile iron plug or cap w/ DIP, CIP or PVCP	EA	5		$		$	
4017	F&I 16" bends, offset, sleeves or reducers with DIP, CIP or PVCP	EA	25		$		$	
4018	F&I 16" ductile iron tee with DIP, CIP or PVCP	EA	5		$		$	
4019	F&I 16" ductile iron cross with DIP or CIP	EA	6		$		$	
4020	F&I 20" ductile iron plug or cap w/ DIP or CIP	EA	10		$		$	

Item No.	Description	Unit	Approx. Quantity	Unit Price in Words		Unit Price		Total Computed Price
4021	F&I 20" bends, offsets, sleeves or reducers with DIP or CIP	EA	10		$		$	
4022	F&I 20" ductile iron tee with DIP or CIP	EA	6		$		$	
4023	F&I 20" ductile iron cross w/ DIP or CIP	EA	4		$		$	
4024	F&I 24" ductile iron plug or cap w/ DIP or CIP	EA	4		$		$	
4025	F&I 24" bends, offsets, sleeves or reducers with DIP or CIP	EA	25		$		$	
4026	F&I 24" ductile iron tee with DIP or CIP	EA	5		$		$	
4027	F&I 24" ductile iron cross w/ DIP or CIP	EA	4		$		$	
4028	F&I 30" ductile iron plug or cap w/ DIP or CIP	EA	4		$		$	
4029	F&I 30" bends, offsets, sleeves or reducers w/ DIP or CIP	EA	25		$		$	
4030	F&I 30" ductile iron tee w/ DIP or CIP	EA	5		$		$	
4031	F&I 30" ductile iron cross w/ DIP or CIP	EA	5		$		$	
4032	F&I 36" ductile iron plug or cap w/ DIP or CIP	EA	4		$		$	
4033	F&I 36" bends, offsets, sleeves or reducers w/ DIP or CIP	EA	30		$		$	
4034	F&I 36" ductile iron tee with DIP or CIP	EA	5		$		$	
4035	F&I 36" ductile iron cross w/ DIP or CIP	EA	2		$		$	
4036	F&I 42" ductile iron plug or cap w/DIP or CIP	EA	4		$		$	
4037	F&I 42" bends, offsets, sleeves or reducers w/ DIP or CIP	EA	25		$		$	
4038	F&I 42" ductile iron tee W/ DIP or CIP	EA	4		$		$	
4039	F&I 42" ductile iron cross w/ DIP or CIP	EA	2		$		$	

Item No.	Description	Unit	Approx. Quantity	Unit Price in Words		Unit Price		Total Computed Price
4040	F&I 48" ductile iron plug or cap w/DIP or CIP	EA	4		$		$	
4041	F&I 48" bends, offsets, sleeves or reducers w/ DIP or CIP	EA	40		$		$	
4042	F&I 48" ductile iron tee W/ DIP or CIP	EA	15		$		$	
4043	F&I 48" ductile iron cross w/ DIP or CIP	EA	2		$		$	
4050	F&I 4" ductile iron plug or cap w/ HDPEP	EA	4		$		$	
4051	F&I 4" ductile iron bends, offsets, sleeves or reducers w/ HDPEP	EA	10		$		$	
4052	F&I 4" ductile iron tee w/ HDPEP	EA	4		$		$	
4053	F&I 4" ductile iron cross w/ HDPEP	EA	2		$		$	
4054	F&I 6" ductile iron plug or cap w/ HDPEP	EA	4		$		$	
4055	F&I 6" ductile iron bends, offsets, sleeves or reducers w/ HDPEP	EA	20		$		$	
4056	F&I 6" ductile iron tee w/ HDPEP	EA	4		$		$	
4057	F&I 6" ductile iron cross w/ HDPEP	EA	2		$		$	
4058	F&I 8" plug or cap w/ HDPEP	EA	6		$		$	
4059	F&I 8" ductile iron bends, offset, sleeves or reducers w/ HDPEP	EA	10		$		$	
4060	F&I 8" ductile iron tee w/ HDPEP	EA	4		$		$	
4061	F&I 8" ductile iron cross w/ HDPEP	EA	2		$		$	
4062	F&I 10" ductile iron bends, offsets, sleeves or reducers w/ HDPEP	EA	4		$		$	
4063	F&I 12" ductile iron plug or cap w/ HDPEP	EA	4		$		$	
4064	F&I 12" ductile iron bends, offsets, sleeves or reducers w/ HDPEP	EA	25		$		$	

Item No.	Description	Unit	Approx. Quantity	Unit Price in Words		Unit Price		Total Computed Price
4065	F&I 12" ductile iron tee w/ HDPEP	EA	10		$		$	
4066	F&I 12" ductile iron cross w/ HDPEP	EA	2		$		$	
4067	F&I 14" ductile iron bends, offsets, sleeves or reducers w/ HDPEP	EA	4		$		$	
5000	F&I full fire hydrant assembly on new or existing mains	EA	200		$		$	
5100	F&I protection post	EA	40		$		$	
5200	Remove and salvage of fire hydrant	EA	30		$		$	
6000	F&I 2" gate valve with box on DIP, CIP or PVCP	EA	60		$		$	
6001	F&I 4" gate or tapping valve with box on DIP, CIP or PVCP	EA	30		$		$	
6002	F&I 6" gate or tapping valve with box on DIP, CIP or PVCP	EA	400		$		$	
6003	F&I 8" gate or tapping valve with box on DIP, CIP or PVCP	EA	300		$		$	
6004	F&I 12" gate or tapping valve with box on DIP, CIP or PVCP	EA	100		$		$	
6005	F&I 16" gate or tapping valve with box on DIP, CIP or PVCP	EA	30		$		$	
6006	F&I 20" gate valve with box on DIP or CIP	EA	10		$		$	
6007	F&I 24" gate valve with box on DIP or CIP	EA	10		$		$	
6008	F&I 30" gate valve with box on DIP or CIP	EA	10		$		$	
6009	F&I 36" gate valve with box on DIP or CIP	EA	10		$		$	
6010	F&I 42" gate valve with box on DIP or CIP	EA	5		$		$	
6011	F&I 48" gate valve with box on DIP or CIP	EA	8		$		$	
6020	F&I 16" butterfly valve with box on DIP, CIP or PVCP	EA	10		$		$	

Item No.	Description	Unit	Approx. Quantity	Unit Price in Words		Unit Price		Total Computed Price
6021	F&I 20" butterfly valve with box on DIP or CIP	EA	5		$		$	
6022	F&I 24" butterfly valve with box on DIP or CIP	EA	5		$		$	
6023	F&I 30" butterfly valve with box on DIP or CIP	EA	5		$		$	
6024	F&I 36" butterfly valve with box on DIP or CIP	EA	5		$		$	
6025	F&I 42" butterfly valve with box on DIP or CIP	EA	5		$		$	
6026	F&I 48" butterfly valve with box on DIP or CIP	EA	5		$		$	
6070	F&I 2" gate valve and box on HDPEP	EA	10		$		$	
6071	F&I 4" gate valve and box on HDPEP	EA	10		$		$	
6072	F&I 6" gate valve and box on HDPEP	EA	10		$		$	
6073	F&I 8" gate valve and box on HDPEP	EA	10		$		$	
6074	F&I 12" gate valve and box on HDPEP	EA	10		$		$	
6100	F&I 4" Linestop on Existing Water Main (0-5')	EA	10		$		$	
6101	F&I 4"Linestop on Existing AC Water Main (0-5')	EA	10		$		$	
6102	F&I 6" Linestop on Existing Water Main (0-5')	EA	10		$		$	
6103	F&I 6"Linestop on Existing AC Water Main (0-5')	EA	10		$		$	
6104	F&I 8" Linestop on Existing Water Main (0-5')	EA	10		$		$	
6105	F&I 8"Linestop on Existing Water Main (+5')	EA	10		$		$	
6106	F&I 10" Linestop on Existing Water Main (0-5')	EA	10		$		$	
6107	F&I 10"Linestop on Existing Water Main (+5')	EA	10		$		$	

Item No.	Description	Unit	Approx. Quantity	Unit Price in Words		Unit Price		Total Computed Price
6108	F&I 12" Linestop on Existing Water Main (0-5')	EA	10		$		$	
6109	F&I 12"Linestop on Existing Water Main (+5')	EA	10		$		$	
6110	F&I 16" Linestop on Existing Water Main (+5')	EA	10		$		$	
6111	F&I 24"Linestop on Existing Water Main (+5')	EA	6		$		$	
6112	F&I 30"Linestop on Existing Water Main (+5')	EA	5		$		$	
6113	F&I 36"Linestop on Existing Water Main (+5')	EA	5		$		$	
6200	F&I 4" Insertion Valves on Existing Water Main (0-5')	EA	10		$		$	
6201	F&I 4" TEAM Insertion Valve on Existing Water Main (0-5')	EA	10		$		$	
6202	F&I 6" Insertion Valves on Existing Water Main (0-5')	EA	10		$		$	
6203	F&I 6" TEAM Insertion Valves on Existing Water Main (0-5')	EA	10		$		$	
6204	F&I 8" Insertion Valves on Existing Water Main (0-5')	EA	10		$		$	
6205	F&I 8" TEAM Insertion Valves on Existing Water Main (0-5')	EA	10		$		$	
6206	F&I 12" Insertion Valves on Existing Water Main (0-5')	EA	5		$		$	
6207	F&I 12" TEAM Insertion Valves on Existing Water Main (0-5')	EA	5		$		$	
7000	F&I 4" tapping sleeve and make tap	EA	2		$		$	
7001	F&I 6" tapping sleeve and make tap	EA	100		$		$	
7002	F&I 8" tapping sleeve and make tap	EA	100		$		$	
7003	F&I 12" tapping sleeve and make tap	EA	100		$		$	
7004	F&I 16" tapping sleeve and make tap	EA	25		$		$	

Item No.	Description	Unit	Approx. Quantity	Unit Price in Words		Unit Price		Total Computed Price
7005	F&I 20" tapping sleeve and make tap	EA	10		$		$	
7006	F&I 24" tapping sleeve and make tap	EA	10		$		$	
7007	F&I 30" tapping sleeve and make tap	EA	10		$		$	
7008	F&I 36" tapping sleeve and make tap	EA	10		$		$	
7009	F&I 42" tapping sleeve and make tap	EA	10		$		$	
7010	F&I 48" tapping sleeve and make tap	EA	10		$		$	
8100	Furnish tap and install 3/4" or 1" meter service on PVCP, DIP, or CIP (0-15' HDPE)	EA	1000		$		$	
8101	Furnish, tap and install 3/4" meter service on PVCP, DIP or CIP (+15-80' HDPE)	EA	1000		$		$	
8102	Furnish, tap and install 3/4" meter service on PVCP, DIP or CIP (+80-150' HDPE)	EA.	200		$		$	
8103	Furnish, tap and install 3/4" Duel meter service on PVCP, DIP or CIP (0-15' HDPE)	EA	100		$		$	
8104	Furnish, tap and install 3/4" Dual or 1" Dual meter service on PVCP, DIP or CIP (+15-80' HDPE)	EA	100		$		$	
8105	Furnish, tap and install 3/4" Dual meter service on PVCP, DIP or CIP (+80-150' HDPE)	EA	50		$		$	
8106	Furnish, tap and install 1" Dual meter service on PVCP, DIP or CIP (0-15' HDPE)	EA	100		$		$	
8107	Furnish, tap and install 1" or 1-1/2" meter service on PVCP, DIP or CIP (+15-80' HDPE)	EA	100		$		$	
8108	Furnish, tap and install 1" or 1-1/2" meter service on PVCP, DIP or CIP (+80-150' HDPE)	EA	20		$		$	
8109	Furnish, tap and install 1-1/2" or 2" meter service on PVCP, DIP or CIP (0-15' HDPE)	EA	100		$		$	
8110	Furnish, tap and install 2" DDCV and service on PVCP, DIP or CIP (0-15' HDPE)	EA	100		$		$	
8120	Furnish, tap and install 3/4" or 1" meter service on HDPEP (0-15' HDPE)	EA	100		$		$	
8121	Furnish, tap and install 3/4" meter service on HDPEP (+15-80' HDPE)	EA	100		$		$	

Item No.	Description	Unit	Approx. Quantity	Unit Price in Words		Unit Price		Total Computed Price
8122	Furnish, tap and install 3/4" meter service HDPEP (+80-150' HDPE)	EA	20		$		$	
8123	Furnish, tap and install 3/4" Dual meter service on HDPEP (0-15' HDPE)	EA	20		$		$	
8124	Furnish, tap and install 3/4" Dual or 1" Dual meter service on HDPEP (+15-80' HDPE)	EA	10		$		$	
8125	Furnish, tap and install 3/4" Dual meter service on HDPEP (+80-150' HDPE)	EA	10		$		$	
8126	Furnish, tap and install 1" Dual meter service on HDPEP (0-15' HDPE)	EA	10		$		$	
8127	Furnish, tap and install 1" or 1-1/2" meter service on HDPEP (+15-80' HDPE)	EA	10		$		$	
8128	Furnish, tap and install 1-1/2" or 2" meter service on HDPEP (+80-150' HDPE)	EA	10		$		$	
8129	Furnish, tap and install 1" or 1-1/2" meter service on HDPEP (0-15' HDPE)	EA	10		$		$	
8130	Furnish, tap and install 2" DDCV and service on HDPEP (0-15' HDPE)	EA	20		$		$	
8200	Raise 3/4" meter	EA	20		$		$	
8201	Raise 1" meter	EA	20		$		$	
8202	Raise 1-1/2" meter	EA	20		$		$	
8203	Raise 2" meter	EA	20		$		$	
8300	Install 3" meter	EA	6		$		$	
8301	Install 4" meter	EA	6		$		$	
8302	Install 6" meter	EA	6		$		$	
8303	Install 8" meter	EA	6		$		$	
8320	Install 4" double detector check valve assembly	EA	6		$		$	
8321	Install 6" double detector check valve assembly	EA	6		$		$	
8322	Install 8" double detector check valve assembly	EA	6		$		$	

Item No.	Description	Unit	Approx. Quantity	Unit Price in Words		Unit Price		Total Computed Price
8323	Install 10" double detector check valve assembly	EA	6		$		$	
8324	Install 12" double detector check valve assembly	EA	6		$		$	
8400	F&I 6'0" X 6'0" above-ground vault or below-ground vault	EA	2		$		$	
8401	F&I 8'0" X 5'4" above-ground vault or below-ground vault	EA	2		$		$	
8402	F&I 9'4" X 8'0" above-ground vault or below-ground vault	EA	2		$		$	
8403	F&I 10'8" X 8'0" above-ground vault or below-ground vault	EA	2		$		$	
8404	F&I auxiliary materials for above-ground large service	EA	5		$		$	
8405	F&I 12' X 5' concrete slab for above-ground Meters and DDCV's	EA	5		$		$	
8406	F&I 12' X 9' concrete slab for above-ground Meters and DDCV's	EA	5		$		$	
9200	Furnish, place and compact limerock base	CY	500		$		$	
9201	Furnish, place and compact crushed concrete base	CY	500		$		$	
9203	Furnish, place and compact Superpave Type B-12.5 asphalt base course	SY-IN	400		$		$	
9204	Furnish and install asphalt concrete surface Type S-1	SY-IN	400		$		$	
9205	Furnish and install asphalt concrete surface Superpave Type SP-12.5	SY-IN	300		$		$	
9206	Furnish, place, grade and compact Type SIII asphaltic concrete overlay	SY-IN	300		$		$	
9207	Furnish, place, grade and compact Superpave Type SP-9.5 asphaltic concrete overlay	SY-IN	250		$		$	
9208	Mobilization to perform mechanical milling	EA	10		$		$	
9209	Mechanical milling of asphalt roadways in 1-inch increments	SY-IN	5,000		$		$	
9210	Restore 6" thick concrete driveway	SY	1000		$		$	
9211	Restore brick pavement, including base material	SY	500		$		$	

Item No.	Description	Unit	Approx. Quantity	Unit Price in Words		Unit Price		Total Computed Price
9212	Install Brick pavement furnished by City, Contractor F&I base material	SY	200		$		$	
9213	Furnish materials & Install Signalization loops	EA	20		$		$	
9214	Furnish Traffic Control Officer (Off Duty Law Enforcement)	MH	1000		$		$	
9215	Furnish and install Work Zone Signs	ED	10000		$		$	
9216	Furnish and install Business Signs	ED	20		$		$	
9217	Furnish and install Barricades (Temporary – Type II)	ED	10000		$		$	
9218	Furnish and install Barricades (Temporary Type III) (6")	ED	10000		$		$	
9219	Furnish and install Advance Warning Arrow Panel	ED	20		$		$	
9220	Furnish and install High Intensity Flashing Lights (Temporary-Type B)	ED	5000		$		$	
9221	Furnish and install Variable Message Sign (Temporary)	ED	20		$		$	
9300	Furnish and install Type "D" concrete curb	LF	500		$		$	
9301	Furnish and install valley curb	LF	500		$		$	
9302	Furnish and install Miami curb	LF	500		$		$	
9303	Furnish and install Type "F" concrete curb	LF	500		$		$	
9304	Furnish and install stone or precast curb	LF	500		$		$	
9305	Remove and install existing stone curb	LF	100		$		$	
9306	Furnish and install asphaltic concrete curb	LF	1000		$		$	
9307	Furnish and install 4" thick concrete sidewalk	SY	5,000		$		$	
9308	Furnish and install hexagon block sidewalk	SY	250		$		$	

Item No.	Description	Unit	Approx. Quantity	Unit Price in Words		Unit Price		Total Computed Price
9309	Grade and sod roadside/ditch bottoms and sides - Bahia	SY	100000		$		$	
9310	Grade and sod roadside/ditch bottoms & sides - St. Augustine	SY	100000		$		$	
9311	Grade, fertilize, sprig, and hydro-seed roadside	SY	10000		$		$	
9312	F&I detectable warnings on concrete walking surfaces	EA	100		$		$	
9400	Grout abandoned pipe	CY	250		$		$	
9500	Furnish, form and place reinforced concrete	CY	250		$		$	
9501	Restore rip-rap (rubble)	CY	100		$		$	
9502	Replace 4" or 6" VC sanitary sewer pipe with PVC	LF	500		$		$	
9503	Replace 8" or 10" VC sanitary sewer pipe with PVC	LF	500		$		$	
9504	Replace damaged but not marked sanitary laterals, w PVC	LF	500		$		$	
9505	Video photography	LF	30,000		$		$	
9600	Demolish and Remove large service vault	EA	1		$		$	
9601	Demolish and Remove Large service concrete slab	EA	2		$		$	
9700	Excavation and removal of rock	CY	2		$		$	
9701	Excavation and removal of muck	CY	10		$		$	
9800	Removal of trees 5" in diameter and greater	EA	5		$		$	
9801	Root Pruning	LF	500		$		$	
9802	F&I 2" diameter Oaks	EA	5		$		$	
9900	Excavation exploratory pits	EA	5		$		$	

Item No.	Description	Unit	Approx. Quantity	Unit Price in Words		Unit Price		Total Computed Price
9910	Valve Box Adjustment or removal	EA	40		$		$	
9911	Vault adjustment or removal, small	EA	1		$		$	
9912	Manhole adjustment	EA	1		$		$	
9920	F&I blow-off assembly per Detail 2.16	EA	50		$		$	
9921	F&I blow-off assembly per Detail 2.17	EA	50		$		$	
9922	F&I air release valve per Detail 2.14 &2.15	EA	50		$		$	
9930	Furnish & install precast thrust blocks	EA	50		$		$	
9931	Furnish, form & pour concrete thrust blocks	CY	98		$		$	
9940	Cut into existing asbestos concrete pipe	EA	18		$		$	
9950	F&I new project signs	EA	12		$		$	
9951	Furnish, install and reletter previously used project signs	EA	10		$		$	
9960	Separate mobilization on project with a final cost equal to or less than $5,000 for a unit price of $2,000 and no cents.	EA	5		$		$	
9970	Supplemental survey layout by a Registered Land Surveyor	LF	3,270		$		$	
9980	Contingency allowance (Water) to be used as directed by the Engineer	EA	1	Four Hundred Thousand Dollars & no cents	$	400,000.00	$	400,000.00
9990	Crew Day allowance	ED	30		$		$	
10000	One-Time Performance Bond Allowance	LS	1		$		$	
	SCHEDULE B - STORMWATER PAY ITEMS							
SW100	Contingency allowance (Stormwater) to be used as directed by the Engineer	EA	1	One Hundred Fifty Thousand Dollars & no cents	$	150,000.00	$	150,000.00

Item No.	Description	Unit	Approx. Quantity	Unit Price in Words		Unit Price		Total Computed Price
SW120	Regrade ditch/embankment/misc. grading	SY	6000		$		$	
SW125	Regular excavation	CY	1600		$		$	
SW350	Concrete Flume	SY	45		$		$	
SW425.01	Stormwater Manhole (Type P-8)	EA	20		$		$	
SW425.03	Stormwater Manhole (Type J-8)	EA	20		$		$	
SW425.1	Inlet, COT Curb Type 2 (P-Bott)	EA	10		$		$	
SW425.11	Inlet, Ditch Bottom (Type C Modified) (J-Bott)	EA	10		$		$	
SW425.2	Inlet, COT Curb Type 2 (J-Bott)	EA	10		$		$	
SW425.3	Inlet, COT Curb Type 3 (P-Bott)	EA	12		$		$	
SW425.4	Inlet, COT Curb Type 3 (J-Bott)	EA	8		$		$	
SW425.5	Inlet, COT Curb Type BR-1 (P-Bott)	EA	8		$		$	
SW425.6	Inlet, COT Curb Type BR-2 (J-Bott)	EA	8		$		$	
SW425.7	Inlet, COT Grate Type T (P-Bott)	EA	8		$		$	
SW425.8	Inlet, Ditch Bottom (Type C)	EA	10		$		$	
SW425.9	Inlet, Ditch Bottom (Type C Modified)	EA	4		$		$	
SW430.1	Pipe Culvert (0-24" SS) (Round)	LF	400		$		$	
SW430.2	Pipe Culvert (0-24" SS) (Round) CLIV	LF	200		$		$	
SW430.3	Pipe Culvert (25-36" SS) (Round)	LF	300		$		$	
SW430.4	Pipe Culvert (37-48" SS) (Round)	LF	40		$		$	

Item No.	Description	Unit	Approx. Quantity	Unit Price in Words		Unit Price		Total Computed Price
SW430.5	Pipe Culvert (49-60" SS) (Round)	LF	40		$		$	
SW430.6	Pipe Culvert (14" x 23" & 19"x 30" SS) (Elliptical)	LF	200		$		$	
SW430.7	Pipe Culvert (14" x 23" & 19"x 30" SS) (Elliptical) CLIV	LF	100		$		$	
SW430.8	Pipe Culvert (24" x 38" SS) (ECP)	LF	150		$		$	
SW430.85	Pipe Culvert (29" x 45" SS) (ECP)	LF	40		$		$	
SW430.86	Pipe Culvert (43" x 68" SS) (ECP)	LF	40		$		$	
SW430.9	Pipe Culvert (38" x 60" SS) (ECP)	LF	20		$		$	
SW435	Connect To Existing Stormwater To Manhole	EA	18		$		$	
SW530	Riprap (rubble)	EA	100		$		$	
	SCHEDULE C - WATER - MINOR PROJECTS PAY ITEMS							
DD5001	F&I full fire hydrant assembly on existing mains via Tap	EA	10		$		$	
DD5002	F&I full fire hydrant assembly on existing mains via remove & replace ex FH, valve & Tee	EA	5		$		$	
DD5003	F&I fire hydrant assembly & new hydrant valve downstream of existing (to remain, wasted) hydrant valve	EA	5		$		$	
DD5201	Remove & salvage hydrant - Type I removal	EA	5		$		$	
DD5003	Remove & salvage hydrant - Type II removal	EA	5		$		$	
DD6012	F&I 2" gate valve with box on DIP, CIP or PVCP	EA	5		$		$	
DD6013	F&I 3" gate valve with box on DIP, CIP or PVCP	EA	2		$		$	
DD6014	F&I 4" gate valve with box on DIP, CIP or PVCP	EA	2		$		$	

Item No.	Description	Unit	Approx. Quantity	Unit Price in Words		Unit Price		Total Computed Price
DD6015	F&I 6" gate valve with box on DIP, CIP or PVCP	EA	5		$		$	
DD6016	F&I 8" gate valve with box on DIP, CIP or PVCP	EA	5		$		$	
DD6017	F&I 10" gate valve with box on DIP, CIP or PVCP	EA	2		$		$	
DD6018	F&I 12" gate valve with box on DIP, CIP or PVCP	EA	5		$		$	
DD6019	F&I 16" gate valve with box on DIP, CIP or PVCP	EA	5		$		$	
DD6020	F&I 16" butterfly valve with box on DIP, CIP or PVCP	EA	5		$		$	
DD6021	F&I 20" butterfly valve with box on DIP or CIP	EA	2		$		$	
DD6022	F&I 24" butterfly valve with box on DIP or CIP	EA	2		$		$	
DD6023	F&I 30" butterfly valve with box on DIP or CIP	EA	2		$		$	
DD6024	F&I 36" butterfly valve with box on DIP or CIP	EA	2		$		$	
DD6025	F&I 42" butterfly valve with box on DIP or CIP	EA	2		$		$	
DD6026	F&I 48" butterfly valve with box on DIP or CIP	EA	2		$		$	
DD6027	F&I 16" gate valve with box on DIP, CIP or PVCP, in ex. Vault	EA	5		$		$	
DD6028	F&I 16" butterfly valve with box on DIP, CIP or PVCP, in ex. Vault	EA	5		$		$	
DD6029	F&I 20" butterfly valve with box on DIP or CIP, in ex. Vault	EA	2		$		$	
DD6030	F&I 24" butterfly valve with box on DIP or CIP, in ex. Vault	EA	2		$		$	
DD6031	F&I 30" butterfly valve with box on DIP or CIP, in ex. Vault	EA	2		$		$	
DD6032	F&I 36" butterfly valve with box on DIP or CIP, in ex. Vault	EA	2		$		$	
DD6033	F&I 42" butterfly valve with box on DIP or CIP, in ex. Vault	EA	2		$		$	

Item No.	Description	Unit	Approx. Quantity	Unit Price in Words		Unit Price		Total Computed Price
DD6075	F&I 2" gate valve and box on HDPEP	EA	2		$		$	
DD6076	F&I 4" gate valve and box on HDPEP	EA	2		$		$	
DD6077	F&I 6" gate valve and box on HDPEP	EA	2		$		$	
DD6078	F&I 8" gate valve and box on HDPEP	EA	2		$		$	
6074	F&I 12" gate valve and box on HDPEP	EA	2		$		$	
DD8200	Furnish tap and install 3/4" or 1" meter service on PVCP, DIP, or CIP (0-15' HDPE)	EA	600		$		$	
DD8201	Furnish, tap and install 3/4" meter service on PVCP, DIP or CIP (+15-80' HDPE)	EA	200		$		$	
DD8202	Furnish, tap and install 3/4" meter service on PVCP, DIP or CIP (+80-150' HDPE)	EA.	2		$		$	
DD8203	Furnish, tap and install 3/4" Duel meter service on PVCP, DIP or CIP (0-15' HDPE)	EA	5		$		$	
DD8204	Furnish, tap and install 3/4" Dual or 1" Dual meter service on PVCP, DIP or CIP (+15-80' HDPE)	EA	5		$		$	
DD8205	Furnish, tap and install 3/4" Dual meter service on PVCP, DIP or CIP (+80-150' HDPE)	EA	2		$		$	
DD8206	Furnish, tap and install 1" Dual meter service on PVCP, DIP or CIP (0-15' HDPE)	EA	2		$		$	
DD8207	Furnish, tap and install 1" or 1-1/2" meter service on PVCP, DIP or CIP (+15-80' HDPE)	EA	5		$		$	
DD8208	Furnish, tap and install 1" or 1-1/2" meter service on PVCP, DIP or CIP (+80-150' HDPE)	EA	2		$		$	
DD8209	Furnish, tap and install 1-1/2" or 2" meter service on PVCP, DIP or CIP (0-15' HDPE)	EA	5		$		$	
DD8210	Furnish, tap and install 2" DDCV and service on PVCP, DIP or CIP (0-15' HDPE)	EA	1		$		$	
DD8250	Furnish, tap and install 3/4" or 1" meter service on HDPEP (0-15' HDPE)	EA	5		$		$	
DD8251	Furnish, tap and install 3/4" meter service on HDPEP (+15-80' HDPE)	EA	2		$		$	
DD8252	Furnish, tap and install 3/4" meter service HDPEP (+80-150' HDPE)	EA	2		$		$	

Item No.	Description	Unit	Approx. Quantity	Unit Price in Words		Unit Price		Total Computed Price
DD8253	Furnish, tap and install 3/4" Dual meter service on HDPEP (0-15' HDPE)	EA	2		$		$	
DD8254	Furnish, tap and install 3/4" Dual or 1" Dual meter service on HDPEP (+15-80' HDPE)	EA	2		$		$	
DD8255	Furnish, tap and install 3/4" Dual meter service on HDPEP (+80-150' HDPE)	EA	2		$		$	
DD8256	Furnish, tap and install 1" Dual meter service on HDPEP (0-15' HDPE)	EA	2		$		$	
DD8257	Furnish, tap and install 1" or 1-1/2" meter service on HDPEP (+15-80' HDPE)	EA	2		$		$	
DD8258	Furnish, tap and install 1-1/2" or 2" meter service on HDPEP (+80-150' HDPE)	EA	2		$		$	
DD8259	Furnish, tap and install 1" or 1-1/2" meter service on HDPEP (0-15' HDPE)	EA	5		$		$	
DD8260	Furnish, tap and install 2" DDCV and service on HDPEP (0-15' HDPE)	EA	2		$		$	
DD9230	Furnish, place and compact limerock base	CY	100		$		$	
DD9231	Furnish, place and compact crushed concrete base	CY	100		$		$	
DD9233	Furnish, place and compact Superpave Type B-12.5 asphalt base course	SY-IN	200		$		$	
DD9234	Furnish and install asphalt concrete surface Type S-1	SY-IN	300		$		$	
DD9235	Furnish and install asphalt concrete surface Superpave Type SP-12.5	SY-IN	100		$		$	
DD9236	Furnish, place, grade and compact Type SIII asphaltic concrete overlay	SY-IN	250		$		$	
DD9237	Furnish, place, grade and compact Superpave Type SP-9.5 asphaltic concrete overlay	SY-IN	100		$		$	
DD9238	Mobilization to perform mechanical milling	EA	12		$		$	
DD9239	Mechanical milling of asphalt roadways in 1-inch increments	SY-IN	5,000		$		$	
DD9240	Restore 6" thick concrete driveway	SY	300		$		$	
DD9241	Restore brick pavement, including base material	SY	200		$		$	

Item No.	Description	Unit	Approx. Quantity	Unit Price in Words		Unit Price		Total Computed Price
DD9242	Install Brick pavement furnished by City, Contractor F&I base material	SY	100		$		$	
DD9243	Furnish materials & Install Signalization loops	EA	6		$		$	
DD9244	Furnish Traffic Control Officer (Off Duty Law Enforcement)	MH	250		$		$	
DD9245	Furnish and install Work Zone Signs	ED	5000		$		$	
DD9246	Furnish and install Business Signs	ED	10		$		$	
DD9247	Furnish and install Barricades (Temporary – Type II)	ED	5000		$		$	
DD9248	Furnish and install Barricades (Temporary Type III) (6")	ED	5000		$		$	
DD9249	Furnish and install Advance Warning Arrow Panel	ED	10		$		$	
DD9250	Furnish and install High Intensity Flashing Lights (Temporary-Type B)	ED	1500		$		$	
DD9251	Furnish and install Variable Message Sign (Temporary)	ED	5		$		$	
DD9308	Furnish and install valley curb	LF	100		$		$	
DD9309	Furnish and install Miami curb	LF	100		$		$	
DD9310	Furnish and install Type "D" concrete curb	LF	100		$		$	
DD9311	Furnish and install Type "F" concrete curb	LF	100		$		$	
DD9312	Furnish and install stone or precast curb	LF	100		$		$	
DD9313	Remove and install existing stone curb	LF	80		$		$	
DD9314	Furnish and install asphaltic concrete curb	LF	200		$		$	
DD9315	Furnish and install 4" thick concrete sidewalk	SY	500		$		$	
DD9316	Furnish and install hexagon block sidewalk	SY	20		$		$	

Item No.	Description	Unit	Approx. Quantity	Unit Price in Words		Unit Price		Total Computed Price
DD9318	Grade, fertilize, sprig, and hydro-seed roadside	SY	1000		$		$	
DD9319	F&I detectable warnings on concrete walking surfaces	EA	20		$		$	
DD9320	Grade and sod roadside/ditch bottoms and sides - Bahia	SY	2500		$		$	
DD9321	Grade and sod roadside/ditch bottoms & sides - St. Augustine	SY	2500		$		$	
				TOTAL	$		$	

Computed Total Price In Words:

_____

_____ dollars and _____ cents.

Computed Total Price in Figures: $_____

The bidder acknowledges that the following addenda have been received and that the changes covered by the addendum(s) have been taken into account in this proposal: #1 ___ #2 ___ #3 ___ #4___ #5___.

The bidder acknowledges the requirements of the City of Tampa's Equal Business Opportunity Program.

Bidder acknowledges that included in the various items of the proposal and the Total Bid Price are costs for complying with the Florida Trench Safety Act (90096), (Laws of Fla.) effective October 1, 1990. The bidder further identifies the costs to be summarized below:

	Trench Safety Measure (Description)	Unit of Measure (LF, SY)	Unit Quantity	Unit Cost	Extended Cost
A.	_____	_____	_____	_____	_____
B.	_____	_____	_____	_____	_____
C.	_____	_____	_____	_____	_____
D.	_____	_____	_____	_____	_____

Total Cost $_____

Signed _____

Failure to complete the above may result in the bid being declared non-responsive.

Accompanying this Proposal is a certified check, cashier's check or Bid Bond (form included herein must be used) on the form at least five (5) percent of the total amount of the Proposal which check shall become the property of the

_____ of _____
(Name of Bank or Surety) (City & State)

City of Tampa, or which bond shall become forthwith due and payable to the City of Tampa, if this Proposal shall be accepted by the City of Tampa and the undersigned shall fail to execute a contract with and to furnish the required Performance Bond and Payment Bond to the City of Tampa within twenty (20) days after the date of receipt of written Notice of Award by the City of Tampa to the undersigned so to do.

Dated _____, 20___

_____
(Name of Bidder)

_____
(Address of Bidder)

_____
(Signature)

_____
(Title)

Where Bidder is a Corporation:

Attest:

_____
Secretary

AFFIX
CORPORATE
SEAL

(ACKNOWLEDGMENT OF PRINCIPAL)

STATE OF)
) SS:
COUNTY OF)

For a Corporation:

STATE OF _____
COUNTY OF _____

The foregoing instrument was acknowledged before me this ___ of _____, 20___ by _____ of _____, a _____ corporation, on behalf of the corporation. He/she is ___ personally known or has ___ produced _____ as identification.

_____
Notary

My Commission Expires:

_____

For an Individual:

STATE OF _____
COUNTY OF _____

The foregoing instrument was acknowledged before me this ___ of _____, 20___ by _____ who is ___ personally known to me or has ___ produced _____ as identification.

_____
Notary

My Commission Expires:

_____

For a Firm:

STATE OF _____
COUNTY OF _____

The foregoing instrument was acknowledged before me this ___ of _____, 20___ by _____ who signed on behalf of the said firm. He/she is ___ personally known or has ___ produced _____ as identification.

_____
Notary

My Commission Expires:

_____

_____

Good Faith Effort Compliance Plan for Small Local Business Subcontracting

City of Tampa - Equal Business Opportunity Program

Contract _____ **Bid Date** _____

Bidder _____

Signature _____ **Date** _____

Name _____ **Title** _____

The following Compliance Plan is a true report of Good Faith Efforts made to accomplish subcontracting goals for Small Local Business Enterprises, SLBEs, on the referenced contract:

□ **The goal for SLBE participation has been met or exceeded. See the DMI form reporting subcontractors to be utilized.**
(Check Box, if appropriate; the remainder of the Compliance Plan need not be reported.)

□ **The goal for SLBE participation has not been met. The following is a recap of Good Faith Efforts made:**
(Check applicable boxes below. Enclose additional documents, and/or add remarks below as needed.)

(1) Soliciting through reasonable and available means the interest of SLBEs that have the capability to perform the work of the contract. The Bidder or Contractor must solicit this interest within sufficient time to allow the SLBEs to respond. The Bidder or Contractor must take appropriate steps to follow up initial solicitations with interested SLBEs. □ See DMI report forms for subcontractors solicited. □ See enclosed supplemental data on solicitation efforts. □ Remarks:

(2) Providing interested SLBEs with adequate information about the plans, specifications, and requirements of the contract, including addenda, in a timely manner to assist them in responding to the solicitation. □ See enclosed sample solicitation. □ Remarks:

(3) Negotiating in good faith with interested SLBEs that have submitted bids. Documentation of negotiation must include the names, addresses, and telephone numbers of SLBEs that were solicited; the date of each such solicitation; a description of the information provided regarding the plans and specifications for the work selected for subcontracting; and evidence as to why agreements could not be reached with SLBEs to perform the work. That there may be some additional costs involved in soliciting and using SLBEs is not a sufficient reason for a contractor's failure to meet the goals, as long as such costs are reasonable. Bidders are not required to accept higher quotes in order to meet the goal. □ DMI subcontractor-utilized forms reflect successful negotiations □ This project is of a low-bid nature and negotiations are limited to clarifications of scope and specifications. □ See enclosed document. □ Remarks:

(4) Not rejecting SLBEs as being unqualified without sound reasons based on a thorough investigation of their capabilities. The SLBEs standing within its industry, membership in specific groups, organizations, or associations and political or social affiliations are not legitimate causes for rejecting or not soliciting bids to meet the goals. □ Not applicable. □ See attached explanation for rejection of a low-bidding subcontractor's bid. □ Remarks:

(5) Making a portion of the work available to SLBE subcontractors and suppliers and to select those portions of the work or material consistent with the available SLBE subcontractors and suppliers, so as to facilitate meeting the goal. □ Sub-Contractors were allowed to bid on their own choice of work or trade without restriction to a pre-determined portion. □ See enclosed comments. □ Remarks:

(6) Making good faith efforts, despite the ability or desire of a Bidder or Contractor to perform the work of a contract with its own organization. A Bidder or Contractor who desires to self-perform the work of a contract must demonstrate good faith efforts unless the goal has been met. □ Sub-Contractors were not prohibited from submitting bids on work not usually sub-contracted. □ Remarks:

(7) Selecting portions of the work to be performed by SLBEs in order to increase the likelihood that the goals will be met. This includes, where appropriate, breaking out contract work items into economically feasible units to facilitate SLBE participation, even when the Bidder or Contractor might otherwise prefer to perform these work items with its own forces. □ Sub-Contractors were allowed to bid on their own choice of work or trade without restriction to a pre-determined portion. □ Sub-Contractors were not prohibited from submitting bids on work not usually sub-contracted. □ See enclosed comments. □ Remarks:

(8) Making efforts to assist interested SLBEs in obtaining bonding, lines of credit, or insurance as required by the city or contractor. □ See enclosed sample solicitation □ see enclosed document. □ Remarks:

(9) Making efforts to assist interested SLBEs in obtaining necessary equipment, supplies, materials, or related assistance or services, including participation in a City-sponsored mentor-protégé program. □ See enclosed sample solicitation. □ See enclosed document. □ Remarks:

(10) Effectively using the services of the City and other organizations that provide assistance in the recruitment and placement of SLBEs. □ See enclosed document. □ The following services were used:

Other Supporting Good Faith Efforts: □ See enclosed document. □ Remarks:

GFECP

Compliance Plan: Guidance For Meeting Good Faith Efforts

1. All firms on the SLBE Goal Setting List must be solicited and documentation provided for email, fax, letters, phone calls, and other communication with the listed firms. The DMI Solicited and DMI-Utilized forms must be completed for all firms solicited or utilized. Other opportunities for subcontracting may be explored by consulting the City of Tampa and/or Hillsborough County certification listings of SLBE's.

2. Solicitation of SLBEs, via written or electronic notification, should provide specific information on the services needed, where plans can be reviewed and assistance offered in obtaining these, if required. Solicitations should be typically be sent a week or more before the bid date. Sample copies of the bidder's solicitations should be provided.

3. With any quotes received, a follow-up should be made whenever needed to confirm scope of work. For any SLBE low quotes rejected, an explanation should be provided detailing negotiation efforts.

4. If a low bid SLBE is rejected or deemed unqualified the contractor must provide an explanation and supporting documentation for this decision.

5. Prime should break down portions of work into economical feasible opportunities for subcontracting. The SLBE directory can be useful in identifying additional subcontracting opportunities and firms not listed in the "SLBE Goal Setting Firms List."

6. Contractor should not preclude SLBEs from bidding on any part of work, even if the Contractor can self-perform the work.

7. Contractor should avoid relying solely on subcontracting out work where availability is not sufficient to attain pre-determined goal.

8. In its solicitations, the Bidder should offer assistance to SLBEs in obtaining bonding, insurance, etc, if required of subcontractors by the City or Prime Contractor.

9. In its solicitation, the Bidder should offer assistance in obtaining equipment for a specific job to SLBEs, if needed.

10. Contractor should use the services offered by such agencies as the Minority Business Development Office of the City of Tampa, Hillsborough County and the NAACP Empowerment Center for the recruitment and placement of SLBEs.

City of Tampa –DMI -Schedule of All Sub-(Contractors/Consultants/Suppliers) Solicited

(FORM MBD-10)

Contract No.:_____ Contract Name:_____

Contractor Name:_____ Address:_____

Federal ID:_____Phone:_____ Fax:_____ Email:_____

[] No Firms were contacted/solicited for this contract.

[] No Firms were contacted because:_____

[] See attached documents with supplemental information.

NIGP Code General Categories: Buildings = 909, General = 912, Heavy = 913, Trades = 914, Architects = 906, Engineers & Surveyors = 925, Supplier = 912-77

This DMI Schedule Must Be Submitted with the Bid or Proposal (Do Not Modify This Form)

S = SLBE W=WMBE Federal ID	Company Name Address Phone & Fax	Type of Ownership (F=Female M=Male) BF BM = African Am. HF HM = Hispanic Am. AF AM = Asian Am. NF NM = Native Am. CF CM = Caucasian	Trade or Services NIGP Code (listed above)	Contact Method L=Letter F=Fax E=Email P=Phone	Quote or Resp. Rec'd Y/N

It is hereby certified that the information provided is an accurate and true account of contacts and solicitations for sub – contracting opportunitieson this contract. ***This form must be completed and submitted with the bid or proposal***.Modifying or failing to sign DMI forms may result in Non-Compliance and/or deemed non-responsive.

Signed:_____ Name/Title:_____ Date:_____

Note: Detailed Instructions for completing this form are on the next page

Instructions for completing The Sub-(Contractors/Consultants/ Suppliers) Solicited Form (Form MBD-10)

This form must be submitted with all bids or proposals. All subcontractors (regardless of ownership or size) solicited and subcontractors from whom unsolicited quotations were received must be included on this form. The instructions that follow correspond to the headings on the form required to be completed.Note: Ability or desire to self-perform all work shall not exempt the prime from Good Faith Efforts when Goal has been established.

- **Contract No.** This is the number assigned by the City of Tampa for the bid or proposal.
- **Contract Name.** This is the name of the contract assigned by the City of Tampa for the bid or proposal.
- **Contractor Name.** The name of your business.
- **Address.** The physical address of your business.
- **Federal ID.**FIN. A number assigned to your business for tax reporting purposes.
- **Phone.** Telephone number to contact business.
- **Fax.** Fax number for business.
- **Email.** Provide email address for electronic correspondence.
- **No Firms were contacted/solicited for this contract.** Checking the box indicates that a pre-determined Subcontract Goal was not set by the City resulting in your business not using subcontractors and will self-perform all work. If during the performance of the contract you employ subcontractors, the City must pre-approve subcontractors. Use of the "Sub-(Contractors/Consultants/Suppliers) Payments" form must be submitted with your invoices. Note: Certified SLBE or WMBE firms bidding as Primes are not exempt from outreach and solicitation of subcontractors.
- **No Firms were contacted because.** Provide brief explanation why no firms were contacted/solicited.
- **See attached documents.**Check box, if after you have completed the DMI Form in its entirety, you are providing any additional documentation relating to the form.All DMI data not submitted on the MBD Form-10 must be in the same format and have all requested data from MBD Form-10 included.

The following instructions are for information of any and all subcontractors solicited.

- **"S" = SLBE, "W" = WMBE.** Enter "**S**" for firms Certified by the City as Small Local Business Enterprises and/or "**W**" for firms Certified by the City as Women/Minority Business Enterprise.
- **Federal ID.**FIN. A number assigned to a business for tax reporting purposes. This information is critical in proper identification of the subcontractor.
- **Company Name, Address, Phone & Fax**. Provide company information for verification of payments.
- **Type of Ownership.** Indicate the Ethnicity and Gender of the owner of the subcontracting business.
- **Trade, Services, or Materials** Indicate the trade, service, or material provided by the subcontractor. NIGP codes are listed at top section of document.
- **Contact Method L=letter, F=fax, E=Email, P=Phone.** Indicate with letter the method of soliciting for bid.
- Q**uote or Resp. (response) Rec'd (received) Y/N**. Indicate "Y" Yes if you received a quotation or if you received a response to your solicitation. Indicate "N" No if you received no response to your solicitation from the subcontractor.

If any additional information is required or you have any questions, you may call the Minority Business Development Office at (813) 274-5522.

City of Tampa –DMI Schedule of Sub-(Contractors/Consultants/Suppliers) to be Utilized

(FORM MBD-20)

Contract No.:_____ Contract Name:_____

Contractor Name:_____ Address:_____

Federal ID:_____Phone:_____ Fax:_____ Email:_____

[ ] See attached documents.

[ ] No Subcontracting (of any kind) will be performed on this contract.

NIGP Code General Categories: Buildings = 909, General = 912, Heavy = 913, Trades = 914, Architects = 906, Engineers & Surveyors = 925, Supplier = 912-77

This DMI Schedule Must Be Submitted with the Bid or Proposal (Do Not Modify This Form)

Enter "S" for firms Certified as Small Local Business Enterprises, "W" for firms Certified as Women/Minority Business Enterprise

S = SLBE W=WMBE Federal ID	Company Name Address Phone & Fax	Type of Ownership (F=Female M=Male) BF BM = African Am. HF HM = Hispanic Am. AF AM = Asian Am. NF NM = Native Am. CF CM = Caucasian	Trade, Services, or Materials NIGP Code Listed above	Amount of Quote. Letter of Intent if available.	Percent of Scope/Contract %

Total Subcontract/Supplier Utilization $_____

Total SLBE Utilization $ _____

Total WMBE Utilization $ _____

Percent SLBE Utilization of Total Bid/Proposal Amt. _____% Percent WMBE Utilization of Total Bid/Proposal Amt. _____%

It is hereby certified that the following information is a true and accurate account of utilization for sub-contracting opportunities on this contract. *This form must be completed and submitted with the bid or proposal*. Modifying or failing to sign DMI forms may result in Non-Complianceand/or deemed non-responsive.

Signed:_____ Name/Title:_____ Date:_____

Note: Detailed Instructions for completing this form are on the next page.

Instructions for completing The Sub-(Contractors/Consultants/ Suppliers) to be Utilized Form

(Form MBD-20)

This form must be submitted with all bids or proposals. All subcontractors projected to be utilized must be included on this form.

- **Contract No.** This is the number assigned by the City of Tampa for the bid or proposal.
- **Contract Name.** This is the name of the contract assigned by the City of Tampa for the bid or proposal.
- **Contractor Name.** The name of your business.
- **Address.** The physical address of your business.
- **Federal ID.**FIN. A number assigned to your business for tax reporting purposes.
- **Phone.** Telephone number to contact business.
- **Fax.** Fax number for business.
- **Email.** Provide email address for electronic correspondence.
- **No Subcontracting (of any kind) will be performed on this contract.** Checking box indicates your business will not use subcontractors when no Subcontract Goal has been set by the City, but will self-perform all work. When subcontractors are utilized during the performance of the contract, the "Sub-(Contractors/Consultants/Suppliers) Payments" form must be submitted with your invoices. Note: Certified SLBE or WMBE firms bidding as Primes are not exempt from outreach and solicitation of subcontractors.
- **See attached documents.** Check if you have provided any additional documentation relating to the utilization of subcontractors.
-

The following instructions are for information of Any and All subcontractors to be utilized.

- **Federal ID.**FIN. A number assigned to a business for tax reporting purposes. This information is critical in proper identification of the subcontractor.
- **"S" = SLBE, "W" = WMBE.** Enter "**S**" for firms Certified by the City as Small Local Business Enterprises and/or "**W**" for firms Certified by the City as Women/Minority Business Enterprise.
- **Company Name, Address, Phone & Fax**. Provide company information for verification of payments.
- **Type of Ownership.** Indicate the Ethnicity and Gender of the owner of the subcontracting business.
- **Trade, Services, or Materials (NIGP code if Known)** Indicate the trade, service, or material provided by the subcontractor. NIGP codes are available at http:/www.tampagov.net/mbd.
- **Amount of Quote, Letters of Intent** (required for both SLBEs and WMBEs)
- **Percent of Work/Contract.** Indicate the percent of the total contract price the subcontract(s) represent.
- **Total Subcontract/Supplier Utilization.** – Provide total dollar amount of all subcontractors/suppliers projected to be used for the contract. (Dollar amounts may not apply to CCNA proposals.)
- **Total SLBE Utilization.** Provide total dollar amount for all projected SLBE subcontractors/Suppliers used for this contract. (Dollar amounts may not apply to CCNA proposals.)
- **Total WMBE Utilization.** Provide total dollar amount for all projected WMBE subcontractors/Suppliers used for this contract. (Dollar amounts may not apply to CCNA proposals.)
- **Percent SLBE Utilization.** Total amount allocated to SLBEs divided by the total bid amount. (Dollar amounts may not apply to CCNA proposals.)
- **Percent WMBE Utilization.** Total amount allocated to WMBEs divided by the total bid/proposal amount. (Dollar amounts may not apply to CCNA proposals.)

If any additional information is required or you have any questions, you may call the Minority Business Development Office at (813) 274-5522.

TAMPA BID BOND

Contract 15-C-00046; Furnish and Install Miscellaneous Water & Stormwater Mains 2"-48" Diameter - FY16

KNOW ALL MEN BY THESE PRESENTS, that we, _____

_____

(hereinafter called the Principal) and _____

(hereinafter called the Surety) a Corporation chartered and existing under the laws of the State of _____, with its principal offices in the City of _____, and authorized to do business in the State of Florida, are held and firmly bound unto the City of Tampa, a Municipal Corporation of Hillsborough County, Florida, in the full and just sum of 5% of the amount of the (Bid) (Proposal) good and lawful money of the United States of America, to be paid upon demand of the City of Tampa, Florida, to which payment will and truly to be made we bind ourselves, our heirs, executors, administrators, successors, and assigns, jointly and severally and firmly these presents.

WHEREAS, the Principal is about to submit, or has submitted to the City of Tampa, Florida, a Proposal for the construction of certain facilities for the City designated Contract 15-C-00046, Furnish and Install Miscellaneous Water & Stormwater Mains 2"-48" Diameter - FY16.

WHEREAS, the Principal desires to file this Bond in accordance with law, in lieu of a certified Bidder's check otherwise required to accompany this Proposal.

NOW, THEREFORE: The conditions of this obligation are such that if the Proposal be accepted, the Principal shall, within twenty (20) days after the date of receipt of written Notice of Award, execute a contract in accordance with the Proposal and upon the terms, conditions and price set forth therein, in the form and manner required by the City of Tampa, Florida and execute a sufficient and satisfactory Public Construction Bond payable to the City of Tampa, Florida in an amount of one hundred percent (100%) of the total contract price, in form and with security satisfactory to said City, then this Bid Bond obligation is to be void; otherwise to be and remain in full force and virtue in law, and the Surety shall, upon failure of the Principal to comply with any or all of the foregoing requirements within the time specified above, immediately pay to the aforesaid City, upon demand, the amount thereof, in good and lawful money of the United States of America, not as a penalty, but as liquidated damages.

IN TESTIMONY THEREOF, the Principal and Surety have caused these presents to be duly signed and sealed this _____ day of _____, 20___.

Principal _____

BY _____

TITLE _____

BY _____

TITLE _____

(SEAL) _____

Producing Agent

_____

Producing Agent's Address

_____

Name of Agency

_____

The addition of such phrases as "not to exceed" or like import shall render the (Bid) (Proposal)non-responsive.

AGREEMENT

For furnishing all labor, materials and equipment, together with all work incidental thereto, necessary and required for the performance of the work for the construction of Contract 15-C-00046 in accordance with your Proposal dated _____, amounting to a total of $_____ as completed in accordance with subsections I-2.09 and I-2.10 of the Instruction to Bidders.

THIS AGREEMENT, made and entered into in triplicate, this ____ day of _____, 20___, between the City of Tampa, Florida, hereinafter called the City, and hereinafter called the Contractor.

WITNESSETH that, in consideration of the mutual stipulations, agreements, and covenants herein contained, the parties hereto have agreed and hereby agree with each other, the Party of the First Part for itself, its successors and assigns, and the Party of the Second Part for itself, or himself, or themselves, and its successors and assigns, or his or their executors, administrators and assigns, as follows:

Contract 15-C-00046; Furnish and Install Miscellaneous Water & Stormwater Mains 2"-48" Diameter - FY16, shall include, but not be limited to, furnishing and installing water mains and appurtenances for water mains ranging in size from 2” to 48” in diameter including concrete masonry, curbs and sidewalks; paving, landscaping, grouting, brick street construction, miscellaneous stormwater maintenance with all associated work required for a complete project in accordance with the Contract Documents.

Contract Documents referred to in Article 1.01 of this Agreement also includes this volume, applicable standard drawings, the plans and any provisions referred to whether actually attached or not.

TAMPA AGREEMENT

SECTION 1
GENERAL

ARTICLE 1.01 THE CONTRACT

Except for titles, subtitles, headings, running headlines, and tables of contents (all of which are printed herein merely for convenience), the following, except for such portions thereof as may be specifically excluded, constitute the Contract:

The Notice to Bidders;
The Instructions to Bidders, including Special Instructions and General Instructions;
The Proposal;
The Bid Bond;
The Certification of Nonsegregated Facilities;
The Notice of Award;
The Agreement;
The Performance Bond;
The Notice To Proceed;
The Specifications, including the General Provisions, the Workmanship and Materials, the Specific Provisions or the Contract Items
The Plans;
All Supplementary Drawings Issued after award of the Contract;
All Addenda issued by the City prior to the receipt of proposals;
All provisions required by law to be inserted in this Contract, whether actually inserted or not.

ARTICLE 1.02 DEFINITIONS

The following words and terms, or pronouns used in their stead, shall, wherever they appear in this Contract, be construed as follows, unless different meaning is clear from the context:

(a)"City" shall mean the City of Tampa, Florida, represented by its Mayor and City Council, Party of the First Part, or such other City official as shall be duly empowered to act for the City on matters relating to this Contract.

(b)"Contractor" shall mean the Party of the Second Part hereto, whether corporation, firm or individual, or any combination thereof, and its, their, or his successors, personal representatives, executors, administrators, and assigns, and any person, firm or corporation who or which shall at any time be substituted in the place of the Party of the Second Part under this Contract.

(c)"Engineer" shall mean the Director of the Department or his duly authorized representative.

(d)"Consultant" shall mean the engineering or architectural firm or individual employed by the City to consult with and advise the City in the construction of the project.

(e)"Surety" shall mean any person, firm or corporation that has executed as Surety the Contractor's Performance Bond securing the performance of this Contact.

(f)"The Work" shall mean everything expressly or implied required to be furnished and done by the Contractor under the Contract, and shall include both Contract Work and Extra Work.

(g)"Contract Work" shall mean everything expressly or implied required to be furnished and done by the Contractor by any one or more of the Contract parts referred to in Article 1.01 hereof, except Extra Work, as hereinafter defined; it being understood that, in case of any inconsistency in or between any part or parts of this Contract, the Engineer shall determine which shall prevail.

(h)"Contract" or "Contract Documents" shall mean each of the various part of the Contract referred to in Article 1.01 hereof, both as a whole and severally.

(i)"Extra Work" shall mean work other than that required either expressly or implied by the contract in its present form.

(j)"Plans" shall mean only those drawings specifically referred to as such in these documents, or in any Addendum. Drawings issued after the execution of the Contract to explain further, or to illustrate, or to show changes in the work, will be known as "Supplementary Drawings" and shall be binding upon the Contractor with the same force as the Plans.

(k)"Specifications" shall mean all of the directions, requirements, and standards of performance applying to the work, as hereinafter detailed and designated as such, or which may be issued in an addendum.

(l)"Addendum or Addenda" shall mean the additional contract provisions issued in writing prior to the receipt of bids.

(m)"Notice" shall mean written notice. Notice shall be served upon the Contractor, either personally or by leaving the said notice at his residence or with any employee found on the work, or addressed to the Contractor at the residence or place of business given in his proposal and deposited in a postpaid wrapper in any post office box regularly maintained by the United States Post Office.

(n)"Project" shall mean the entire improvement package or related work. The "project" may consist of several different, but related, contracts.

(o)"Site" shall mean, and be limited to, the area upon or in which the Contractor's operations are carried on and such other appropriate areas as may be designed as such by the Engineer.

(p)"Subcontractor" shall mean any person, firm, or corporation, other than employees of the Contractor, who or which contracts with the Contractor to furnish, or actually furnishes labor, or labor and materials, or labor and equipment or labor, materials, and equipment at the site.

(q)Whenever in the Contract the words "directed", "required", "permitted", "ordered", "designated", "prescribed", and words of like import are used, they shall imply the direction, requirement, permission, order, designation, or prescription of the Engineer; and "approved", "acceptable", "satisfactory", "in the judgement of", and words of like import shall mean approved by, or acceptable to, or satisfactory to, or in the judgment of the Engineer.

(r)Whenever in the Contract the word "day" is used, it shall mean calendar day.

(s)"Final Acceptance" shall mean acceptance of the

work as evidenced by an official resolution of the City. Such acceptance shall be deemed to have taken place only if and when an approving resolution has been adopted by the City Council. The final acceptance shall be signed only after the City has assured itself by tests, inspection, or otherwise, that all of the provisions of the Contract have been carried out to its satisfaction.

(t)"Eastern Standard Time" shall be construed as the time being observed in the City on the day proposals are received or other documents issued or signed.

SECTION 2
POWERS OF THE CITY'S REPRESENTATIVES

ARTICLE 2.01 THE ENGINEER

It is covenanted and agreed that the Engineer, in addition to those matters elsewhere herein expressly made subject to his determination, direction, or approval, shall have the power, subject to such express provisions and limitations herein contained as are not in conflict herewith, and subject to review by the Mayor and City Council:

(a)To monitor the performance of the work.

(b)To determine the amount, kind, quality, sequence, and location of the work to be paid for hereunder and, when completed, to measure such work for payment.

(c)To determine all questions of an engineering character in relation to the work, to interpret the Plans, Specifications and Addenda.

(d)To determine how the work of this Contract shall be coordinated with the work of other contractors engaged simultaneously on this project.

(e)To make minor changes in the work as he deems necessary, provided such changes do not result in a net increase in the cost to the City or to the Contractor of the work to be done under the Contract.

(f)To amplify the Plans, add explanatory information and furnish additional Specifications and Drawings consistent with the intent of the Contract Documents.

The power of the Engineer shall not be limited to the foregoing enumeration, for it is the intent of this Contract that all of the work shall be subject to his determinations and approval, except where the determination or approval of someone other than the Engineer is expressly called for herein and except as subject to review by the Mayor and City Council. All orders of the Engineer requiring the Contractor to perform work as Contract work shall be promptly obeyed by the Contractor.

The Engineer shall not, however, have the power to issue an extra work order, and the performance of such work on the order of the Engineer without previously obtaining written confirmation thereof from the Mayor in accordance with Article 7.02 hereof may constitute a waiver of any right to extra compensation therefor. The Contractor is warned that the Engineer has no power to change the terms and provisions of this Contract, except minor changes where such change results in no net increase in the Contract Price.

ARTICLE 2.02 DIRECTOR

The Director of the Department in addition to those matters expressly made subject to his determination, direction or approval in his capacity as "Engineer", shall also have the power:

(a)To review any and all questions in relation to this Contract and its performance, except as herein otherwise specifically provided, and his determination upon such review shall be final and conclusive upon the Contractor.

(b)With the approval of the Mayor and City Council to authorize modifications or changes in the Contract so as to require: (1) the performance of extra work, or (2) the omission of Contract work whenever he deems it in the interest of the City to do so, or both.

(c)To suspend the whole or any part of the work whenever, in his judgment, such suspension is required: (1) in the interest of the City generally, or (2) to coordinate the work of the various Contractors engaged on this project, or (3) to expedite the completion of the entire project, even though the completion of this particular Contract may be thereby delayed, <u>without compensation to the Contractor for such suspension other than extending the time for the completion of the work, as much as it may have been, in the opinion of the City, delayed by such a suspension.</u>

(d)If, before the final acceptance of all the work contemplated herein, it shall be deemed necessary to take over, use, occupy, or operate any part of the completed or partly completed work, the Engineer shall have the right to do so and the Contractor will not, in any way, interfere with or object to the use, occupation, or operation of such work by the City after receipt of notice in writing from the Engineer that such work or part thereof will be used by the City on and after the date specified in such notice. Such taking over, use, occupancy or operation of any part of the completed or partially completed work shall not constitute final acceptance or approval of any such part of the work.

ARTICLE 2.03 NO ESTOPPEL

The City shall not, nor shall any department, officer, agent, or employee thereof, be bound, precluded, or estopped by any determination, decision, acceptance, return, certificate, or payment made or given under or in connection with this Contract by any officer, agent or employee of the City at any time either before or after final completion and acceptance of the work and payment therefor: (a) from showing the true and correct classification, amount, quality, or character of the work done, or that any determination, decision, acceptance, return certificate or payment is untrue, incorrect or improperly made in any particular, or that the work or any part thereof does not in fact conform to the requirements of the Contract Documents, and (b) from demanding and recovering from the Contractor any overpayments made to him or such damages as it may sustain by reason his failure to comply with the requirements of the Contract of Documents, or both.

ARTICLE 2.04 NO WAIVER OF RIGHTS

Neither the inspection, nor any order, measurements or certificate of the City or its employees, officers, or agents, nor by any order of the City for payment of money, nor any money, nor payments for or acceptance of the whole or any part of the work by the City, nor any extension of time, nor any changes in the Contract, Specifications or Plans, nor any possession by the City or its employees shall operate as a

waiver of any provisions of this Contract, nor any power herein provided nor shall any waiver of any breach of this Contract be held as a waiver of any other subsequent breach.

Any remedy provided in this Contract shall be taken and construed as cumulative, namely, in addition to each and every other suit, action, or legal proceeding. The City shall be entitled as of right to an injunction against any breach of the provisions of this Contract.

SECTION 3
PERFORMANCE OF WORK

ARTICLE 3.01 CONTRACTOR'S RESPONSIBILITY

The Contractor shall do all the work and furnish, at his own cost and expense, all labor, materials, equipment, and other facilities, except as herein otherwise provided, as may be necessary and proper for performing and completing the work under this Contract. The Contractor shall be responsible for the entire work until completed and finally accepted by the City.

The work shall be performed in accordance with the true intent and meaning of the Contract Documents. Unless otherwise expressly provided, the work must be performed in accordance with the best modern practice, with materials as specified and workmanship of the highest quality, all as determined by and entirely to the satisfaction of the Engineer.

Unless otherwise expressly provided, the means and methods of construction shall be such as the Contractor may choose, subject, however, to the approval of the Engineer. Only adequate and safe procedure, methods, structures and equipment shall be used. The Engineer's approval or the Engineer's failure to exercise his right thereon shall not relieve the Contractor of obligations to accomplish the result intended by the Contract, nor shall such create a cause of action for damages.

ARTICLE 3.02 COMPLIANCE WITH LAWS

The Contractor must comply with all local, State and Federal laws, rules, ordinances and regulations applicable to this Contract and to the work done hereunder, and must obtain, at his own expense, all permits, licenses or other authorization necessary for the prosecution of the work.

No work shall be performed under this Contract on Sundays, legal holidays or after regular working hours without the express permission of the Engineer. Where such permission is granted, the Engineer may require that such work be performed without additional expense to the City.

ARTICLE 3.03 INSPECTION

During the progress of the work and up to the date of final acceptance, the Contractor shall, at all times, afford the representatives of the City, the Florida Department of Environmental Regulation, and if applicable, the Federal Environmental Protection Agency and the Federal Department of Labor every reasonable, safe and proper facility for inspecting the work done or being done at the site. The inspection of any work shall not relieve the Contractor of any of his obligations to perform proper and satisfactory work as herein specified. Finished or unfinished work found not to be in strict accordance with the Contract shall be replaced as directed by the Engineer, even though such work may have been previously approved and payment made therefor.

The City shall have the right to reject materials and workmanship which are defective or require their correction. Rejected work and materials must be promptly removed from the site, which must at all times be kept in a reasonably clean and neat condition.

Failure or neglect on the part of the City to condemn or reject bad or inferior work or materials shall not be construed to imply an acceptance of such work or materials, if it becomes evident at any time prior to the final acceptance of the work by the City. Neither shall it be construed as barring the City at any subsequent time from the recovery of damages of such a sum of money as may be needed to build anew all portions of the work in which inferior work or improper materials were used, wherever found.

Should it be considered necessary or advisable by the City at any time before final acceptance of the entire work to make examinations of work already completed, by removing or tearing out all or portions of such work, the Contractor shall, on request, promptly furnish all necessary facilities, labor, and material for that purpose. If such work is found to be defective in any material respect, due to the fault of the Contractor or his subcontractors, he shall defray all expenses of such examination and of satisfactory reconstruction. If, however, such work is found to meet the requirements of the Contract, the cost of examination and restoration of the work shall be considered an item of extra work to be paid for in accordance with the provisions of Article 7.02 hereof.

ARTICLE 3.04 PROTECTION

During performance and until final acceptance, the Contractor shall be under an absolute obligation to protect the finished and unfinished work against any damage, loss, or injury. The Contractor shall take proper precaution to protect the finished work from loss or damage, pending completion and the final acceptance of all the work included in the entire Contract, provided that such precaution shall not relieve the Contractor from any and all liability and responsibility for loss or damage to the work occurring before final acceptance by the City. Such loss or damage shall be at the risk of and borne by the Contractor, whether arising from acts or omissions of the Contractor or others. In the event of any such loss or damage, the Contractor shall forthwith repair, replace, and make good the work without extension of time therefor, except as may be otherwise provided herein.

The provisions of this Article shall not be deemed to create any new right of action in favor of third parties against the Contractor or the City.

ARTICLE 3.05 PRESERVATION OF PROPERTY

The Contractor shall preserve from damage all property along the line of the work, or which is in the vicinity of or is in anywise affected by the work, the removal or destruction of which is not called for by the Plans. This applies, but is not limited, to the public utilities, trees, lawn areas, building monuments, fences, pipe and underground structures, public streets (except natural wear and tear of streets resulting from legitimate use thereof by the Contractor), and wherever such property is damaged due to the activities of the Contractor, it shall be immediately restored to its original condition by the Contractor and at his own expense.

In case of failure on the part of the Contractor to restore such property, or make good such damage or injury, the City may, upon forty-eight (48) hour written notice, proceed to repair, rebuild, or otherwise restore such property as may be deemed necessary, and the cost thereof will be deducted from any monies due or which may become due the Contractor under this Contract. Nothing in this clause shall prevent the Contractor from receiving proper compensation for the removal, damage, or replacement of any public or private property not shown on the Plans, when this is made necessary by alteration of grade or alignment authorized by the Engineer, provided that such property has not been damaged through fault of the Contractor, his employees or agents.

ARTICLE 3.06 BOUNDARIES
The Contractor shall confine his equipment, apparatus, the storage of materials, supplies and apparatus of his workmen to the limits indicated on the plans, by law, ordinances, permits or direction of the Engineer.

ARTICLE 3.07 SAFETY AND HEALTH REGULATIONS
The Contractor shall comply with the Department of Labor Safety and Health Regulations for construction promulgated under the Occupational Safety and Health Act of 1970 (PL 91- 596) and under Section 107 of the Contract Work Hours and Safety Standards Act (PL91-54).

ARTICLE 3.08 TAXES
All taxes of any kind and character payable on account of the work done and materials furnished under this Contract shall be paid by the Contractor and shall be deemed to have been included in his bid. The laws of the State of Florida provide that sales and use taxes are payable by the Contractor upon the tangible personal property incorporated in the work and such taxes shall be paid by the Contractor and shall be deemed to have been included in his bid.

ARTICLE 3.09 ENVIRONMENTAL CONSIDERATIONS
The Contractor, in the performance of the work under this Contract, shall comply with all Local, State and Federal laws, statutes, ordinances, rules and regulations applicable to protection of the environment; and, in the event he violates any of the provisions of same, he shall be answerable to the Local, State and Federal agencies designated by law to protect the environment. In the event the City receives, from any of the environmental agencies, a citation which is occasioned by an act or omission of the Contractor or his subcontractor or any officers, employees or agents of either, it is understood and agreed that the Contractor shall automatically become a party-respondent under said citation; and the City immediately shall notify the Contractor and provide him with a copy of said citation.

The Contractor shall comply with the requirements of the citation and correct the offending conditions(s) within the time stated in said citation and further shall be held fully responsible for all fines and/or penalties.

SECTION 4
TIME PROVISIONS

ARTICLE 4.01 TIME OF START AND COMPLETION
The Contractor must commence work within thirty (30) days subsequent to the date of the receipt of the "Notice to Proceed" by the City unless otherwise provided in the Specific Provisions and Special Instructions. Time being of the essence of this Contract, the Contractor shall thereafter prosecute the work diligently, using such means and methods of construction as well as secure its full completion in accordance with the requirements of the Contract Documents no later than the date specified therefor, or on the date to which the time for completion may be extended.

The Contractor must complete the work covered by this Contract in the number of consecutive calendar days set forth in the Instructions to Bidders, unless the date of completion is extended pursuant to the provisions of Article 4.05 hereof. The period for performance shall start from the date of signing of this Agreement by the City.

The actual date of completion will be established after a final inspection as provided in Article 4.07 hereof.

ARTICLE 4.02 PROGRESS SCHEDULE
To enable the work to be laid out and prosecuted in an orderly and expeditious manner, the Contractor shall submit to the Engineer a proposed progress schedule within fifteen (15) days after the award of this Contract.

The schedule shall state the Contract starting date, time for completion and date of completion and shall show the anticipated time of starting and completion of each of the various operations to be performed under this Contract, together with all necessary and appropriate information regarding sequence and correlation of work and an estimated time required for the delivery of all materials and equipment required for the work. The proposed schedule shall be revised as directed by the Engineer until finally approved by him, and, after such approval, shall be strictly adhered to by the Contractor. The approved progress schedule may be changed only with the written permission of the Engineer.

If the Contractor shall fail to adhere to the approved progress schedule or the schedule as revised, he shall promptly adopt such other or additional means and methods of construction as will make up for the time lost, and will assure completion in accordance with the contract time.

ARTICLE 4.03 APPROVAL REQUESTS
From time to time, as the work progresses and in the sequence indicated by the approved schedule, the Contractor must submit to the Engineer a specific request, in writing, for each item of information or approval required of him by the Contract. These requests must be submitted sufficiently in advance of the date upon which the information or approval is actually required by the Contractor to allow for the time the Engineer may take to act upon such submissions or resubmissions. The Contractor shall not have any right to an extension of time on account of delays due to his failure to submit his requests for the required information or the required approval in accordance with these requirements.

ARTICLE 4.04 COORDINATION WITH OTHER CONTRACTORS
During progress of the work, other Contractors may be engaged in performing other work on this project or on other projects on the site. In that event, the Contractor shall coordinate the work to be done hereunder with the work of such other Contractors in such manner as the Engineer may direct.

ARTICLE 4.05 EXTENSION OF TIME
If such an application is made, the Contractor shall be entitled to an extension of time for delay in completion of the work should the Contractor be obstructed or delayed in the commencement, prosecution or completion of any part of said work by any act or delay of the City, or by acts or omissions of other Contractors on this project, or by a riot, insurrection, war, pestilence, acts of public authorities, fire, lightning, hurricanes, earthquakes, tornadoes, floods, extremely abnormal and excessive inclement weather as indicated by the records of the local weather bureau for a five-year period preceding the date of the Contract, or by strikes, or other causes, which causes of delay mentioned in this Article, in the opinion of the City, are entirely beyond the expectation and control of the Contractor.

The Contractor shall, however, be entitled to an extension of time for such causes only for the number of days of delay which the City may determine to be due solely to such causes and only to the extent that such occurrences actually delay the completion of the project and then only if the Contractor shall have strictly complied with all of the requirements of Articles 4.01, 4.02, 4.03 and 4.04 hereof. It is hereby understood that the determination by the Engineer as to the order and sequence of the work shall not in itself constitute a basis for extension of time.

The determination made by the City on an application for an extension of time shall be binding and conclusive on the Contractor.

Delays caused by failure of the Contractor's materialmen, manufacturers, and dealers to furnish approved working drawings, materials, fixtures, equipment, appliances, or other fittings on time or failure of subcontractors to perform their work shall not constitute a basis of extension of time.

The Contractor agrees to make no claim for damages for delay in the performance of this Contract occasioned by any act or omission to act of the City or any of its representatives or because of any injunction which may be brought against the City or its representatives and agrees that any such claim shall be fully compensated for by an extension of time to complete performance of the work as provided herein.

ARTICLE 4.06 LIQUIDATED DAMAGES
It is mutually agreed between the parties that time is the essence of this Contract and that there will be on the part of the City considerable monetary damage in the event the Contractor should fail to complete the work within the time fixed for completion in the Contract or within the time to which such completion may have been extended.

The amount per day set forth in the Instructions to Bidders is hereby agreed upon as the liquidated damages for each and every calendar day that the time consumed in completing the work under this Contract exceeds the time allowed.

This amount shall, in no event, be considered as a penalty or otherwise than as the liquidated and adjusted damages to the City because of the delay and the Contractor and his Surety agree that the stated sum per day for each such day of delay shall be deducted and retained out of the monies which may become due hereunder and if not so deductible, the Contractor and his Surety shall be liable therefor.

ARTICLE 4.07 FINAL INSPECTION
When the work has been completed in accordance with the requirements of the Contract and final cleaning up performed, a date for final inspection of the work by the Engineer shall be set by the Contractor in a written request therefor, which date shall be not less than ten (10) days after the date of such request. The work will be deemed complete as of the date so set by the Contractor if, upon such inspection, the Engineer determines that no further work remains to be done at the site.

If such inspection reveals interms of work still to be performed, however, the Contractor shall promptly perform them and then request a reinspection. If, upon such inspection, the Engineer determines that the work is complete, the date of final completion shall be deemed to be the last day of such reinspection.

SECTION 5
SUBCONTRACTS AND ASSIGNMENTS

ARTICLE 5.01 LIMITATIONS AND CONSENT
The Contractor shall not assign, transfer, convey, sublet or otherwise dispose of this Contract or of his right, title, or interest therein, or his power to execute such Contract, or to assign any monies due or to become due thereunder to any other person, firm or corporation unless the previous written consent of the City shall first be obtained thereto and the giving of any such consent to a particular subcontract or assignment shall not dispense with the necessity of such consent to any further or other assignment.

Before making any subcontract, the Contractor must submit a

written statement to the Engineer, giving the name and address of the proposed contractor, the portion of the work and materials which he is to perform and furnish and any other information tending to prove that the proposed subcontractor has the necessary facilities, skill, integrity, past experience and financial resources to perform the work in accordance with the terms and conditions of this Contract.

If the City finds that the proposed subcontractor is qualified, the Contractor will be notified in writing. The City may revoke approval of any subcontractor when such subcontractor evidences an unwillingness or inability to perform his work in strict accordance with these Contract Documents. Notice of such revocation of approval will be given in writing to the Contractor.

The Contractor will promptly, upon request, file with the City a conformed copy of the subcontract. The Contractor shall cause appropriate provisions to be inserted in all subcontracts relative to the work to bind subcontractors to the Contractor by the terms of these Contract Documents, insofar as applicable to the work of subcontractors, and to give the Contractor the same power as regards terminating any subcontracts that the City may exercise over the Contractor under provisions of these Contract Documents.

The Contractor shall be required to perform with his own forces at least twenty-five (25) percent of the work, unless written consent to subcontract a greater percentage of the work is first obtained from the City.

ARTICLE 5.02 RESPONSIBILITY
The approval by the City of a subcontractor shall not relieve the Contractor of any of his responsibilities, duties, and liabilities hereunder. The Contractor shall be solely responsible to the City for the acts or defaults or omissions of his subcontractor and of such subcontractor's officers, agents, and employees, each of whom shall for all purposes be deemed to be the agent or employee of the Contractor. Nothing contained in the Contract Documents shall create any contractual relationship between any subcontractor and the City.

SECTION 6
SECURITY AND GUARANTY

ARTICLE 6.01 CONTRACT SECURITY
The Contractor shall execute and deliver to the City a Performance Bond on the form as provided herein, in an amount at least equal to one hundred (100) percent of the full Contract price, such Bond to be executed by a surety company acceptable to the City. The surety on such Performance Bond shall be a surety company duly authorized to do business in the State of Florida, and the Bond shall be issued or countersigned by a local resident producing agent of such surety company who is a resident of the State of Florida, regularly commissioned and licensed in said State, and satisfactory evidence of the authority of the person or persons executing such Bond shall be submitted with the Bond. The Performance Bond shall serve as security for the faithful performance of this Contract, including maintenance and guaranty provisions, and for the payment of all persons performing labor and furnishing materials in connection with the Contract. The premiums on the Performance Bond shall be paid by the Contractor.

If, at any time, the City shall become dissatisfied with any surety or sureties then upon the Performance Bond, or if for any other reason such bond shall cease to be adequate security for the City, the Contractor shall, within five days after notice so to do, substitute an acceptable Bond in such form and sum and signed by such other sureties as may be satisfactory to the City. The premiums on such Bond shall be paid by the Contractor. No further partial payments shall be deemed due or shall be made until the new sureties have qualified.

ARTICLE 6.02 CONTRACTORS INSURANCE
Insurance required shall be as indicated on Special Instructions pages beginning with "INS-1"

ARTICLE 6.03 AGAINST CLAIMS AND LIENS
The City may withhold from the Contractor as much as any approved payments to him as may, in the opinion of the City, be necessary to secure (a) just claims of any persons supplying labor or materials to the Contractor or any of his subcontractors for the work then due and unpaid; (b) loss due to defective work not remedied, or (c) liability, damage, or loss due to injury to persons or damages to the work or property of other contractors, subcontractors, or others, caused by the act or neglect of the Contractor or of any of his subcontractors. The City shall have the right, as agent for the Contractor, to apply any such amounts so withheld in such manner as the City may deem proper to satisfy such claims or to secure such protection. Such application of such money shall be deemed payments for the account of the Contractor.

ARTICLE 6.04 MAINTENANCE AND GUARANTY
The Contractor hereby guarantees all the work furnished under this Contract against any defects in workmanship and materials for a period of one year following the date of final acceptance of the work by the City. Under this guarantee, the Contractor hereby agrees to make good, without delay, at his own expense, any failure of any part of the work due to faulty materials or manufacture, construction, or installation, or the failure of any equipment to perform satisfactorily all the work put upon it within the limits of the Contract Documents, and further, shall make good any damage to any part of the work caused by such failure. It is hereby agreed that the Performance Bond shall fully cover all guarantees contained in this Article.
It is also agreed that all warranties, expressed or implied, inure to the benefit of the City and are enforceable by the City.

SECTION 7
CHANGES

ARTICLE 7.01 MINOR CHANGES
The City reserves the right to make such additions, deductions, or changes to this Contract from time to time as

it deems necessary and in a manner not materially affecting the substance thereof or materially changing the price to be paid in order to carry out and complete more fully and perfectly the work herein agreed to be done and performed. This Contract shall in no way be invalidated by any such additions, deductions, or changes, and no claim by the Contractor shall be made for any loss of anticipated profits thereby.

Construction conditions may require that minor changes be made in the location and installation of the work and equipment to be furnished and other work to be performed hereunder, and the Contractor when ordered by the Engineer, shall make such adjustments and changes in said locations and work as may be necessary, without additional cost to the City, provided such adjustments and changes do not alter the character, quantity of cost of the work as a whole, and provided further that Plans and Specifications showing such adjustments and changes are furnished to the Contractor by the City within a reasonable time before any work involving such adjustment and changes is begun. The Engineer shall be the sole judge of what constitutes a minor change for which no additional compensation shall be allowed.

ARTICLE 7.02 EXTRA WORK

The City may at any time by a written order and without notice to the sureties require the performance of such extra work as it may find necessary or desirable. An order for extra work shall be valid only if issued in writing and signed by the Mayor and the work so ordered must be performed by the Contractor.

The amount of compensation to be paid to the Contractor for any extra work as so ordered shall be determined as follows:

(a)By such applicable unit prices, if any, as are set forth in the Proposal; or

(b)If no such unit prices are set forth then by a lump sum or other unit prices mutually agreed upon by the City and the Contractor; or

(c)If no such unit prices are set forth in the Proposal and if the parties cannot agree upon a lump sum or other unit prices then by the actual net cost in money to the Contractor of the extra work performed, which cost shall be determined as follows:

(1) For all labor and foreman in direct charge of the authorized operations, the Contractor shall receive the current local rate of wages to be agreed upon, in writing, before starting such work for each hour that said labor and foremen are actually engaged thereon, to which shall be added an amount equal to 25 percent of the sum thereof which shall be considered and accepted as full compensation for general supervision, FICA taxes, contributions under the Florida Unemployment Compensation Act, insurance, bond, subcontractor's profit and overhead, the furnishing of small tools and miscellaneous equipment used, such as picks, shovels, hand pumps, and similar items.

(2) For all materials used, the Contractor shall receive the actual cost of such materials delivered at the site or previously approved delivery point as established by original receipted bills. No percentage shall be added to this cost.

(3) For special equipment and machinery such as power-driven pumps, concrete mixers, trucks, and tractors, or other equipment, required for the economical performance of the authorized work, the Contractor shall receive payment based on the average local area rental price for each item of equipment and the actual time of its use on the work. No percentage shall be added to this sum.

(4) Records of extra work done under this procedure shall be reviewed at the end of each day by the Contractor or his representative and the Engineer. Duplicate copies of accepted records shall be made and signed by both Contractor or his representative and the Engineer, and one copy retained by each.

Request for payment for approved and duly authorized extra work shall be submitted in the same form as Contract work or in the case of work performed under paragraph (c) (1) above upon a certified statement supported by receipted bills. Such statement shall be submitted for the current Contract payment for the month in which the work was done.

ARTICLE 7.03 DISPUTED WORK

If the Contractor is of the opinion that any work required, necessitated, or ordered violates the terms and provisions of this Contract, he must promptly notify the Engineer, in writing, of his contentions with respect thereto and request a final determination thereof. If the Engineer determines that the work in question is Contract work and not extra work or that the order complained of is proper, he will direct the Contractor to proceed and the Contractor shall promptly comply. In order, however, to reserve his right to claim compensation for such work or damages resulting from such compliance, the Contractor must, within five (5) days after receiving notice of the Engineer's determination and direction, notify the City in writing that the work is being performed or that the determination and direction is being complied with under protest. Failure of the Contractor to notify shall be deemed as a waiver of claim for extra compensation or damages therefor.

Before final acceptance by the City, all matters of dispute must be adjusted to the mutual satisfaction of the parties thereto. Final determinations and decisions, in case any questions shall arise, shall constitute a condition precedent to the right of the Contractor to receive the money therefor until the matter in question has been adjusted.

ARTICLE 7.04 OMITTED WORK

The City may at any time by a written order and without notice to the sureties require the omission of such Contract work as it may find necessary or desirable.

An order for omission of work shall be valid only if signed by the Mayor and the work so ordered must be omitted by the Contractor. The amount by which the Contract price shall be reduced shall be determined as follows:

(a) By such applicable unit prices, if any, as are set forth in the Contract; or

(b) By the appropriate lump sum price set forth in the Contract; or

(c) By the fair and reasonable estimated cost to the City

of such omitted work as determined by the Engineer and approved by the City.

SECTION 8
CONTRACTOR'S EMPLOYEES

ARTICLE 8.01 CHARACTER AND COMPETENCY

The Contractor and his subcontractors shall employ upon all parts of the work herein contracted for only competent, skillful, and trustworthy workers. Should the Engineer at any time give notice, in writing, to the Contractor or his duly authorized representative on the work that any employee in his opinion is incompetent, unfaithful, disorderly, careless, unobservant of instructions, or in any way a detriment to the satisfactory progress of the work, such employee shall immediately be dismissed and not again allowed upon the site.

ARTICLE 8.02 SUPERINTENDENCE

The Contractor shall give his personal supervision to the faithful prosecution of the work and in case of his absence shall have a competent, experienced, and reliable supervisor or superintendent, acceptable to the Engineer on the site who shall follow without delay all instructions of the Engineer in the prosecution and completion of the work and every part thereof, in full authority to supply workers, material, and equipment immediately. He shall keep on hand at all times copies of the Contract Documents.

ARTICLE 8.03 EMPLOYMENT OPPORTUNITIES

The Contractor shall, in the performance of the work required to be done under this Contract, employ all workers without discrimination regarding race, creed, color, sex or national origin and must not maintain or provide facilities that are segregated on the basis of race, color, creed or national origin.

ARTICLE 8.04 RATES OF WAGES

On federally assisted projects, the rates of wages to be paid under this Contract shall not be less than the rates of wages set forth in Section 12 of this Agreement.

On other projects, no wage rate determination is included. Florida's Prevailing Wage Law (Section 215.19, Florida Statutes) was repealed effective April 25, 1979.

ARTICLE 8.05 PAYROLL REPORTS

The Contractor and each subcontractor shall, if requested to do so, furnish to the Engineer a duly certified copy of his payroll and also any other information required by the Engineer to satisfy him that the provisions of the law as to the hours of employment and rate of wages are being observed.

Payrolls shall be prepared in accordance with instructions furnished by the City and on approved forms. The Contractor shall not carry on his payroll any persons not employed by him. Subcontractor's employees shall be carried only on the payrolls of the employing subcontractor.

SECTION 9
CONTRACTOR'S DEFAULT

ARTICLE 9.01 CITY'S RIGHT AND NOTICE

It is mutually agreed that: (a) if the Contractor fails to begin work when required to do so, or (b) if at any time during the progress of the work it shall appear to the Engineer that the Contractor is not prosecuting the work with reasonable speed, or is delaying the work unreasonably and unnecessarily, or (c) if the force of workmen or quality or quantity of material furnished are not sufficient to insure completion of the work within the specified time and in accordance with the Specifications hereto attached, or (d) if the Contractor shall fail to make prompt payments for materials or labor or to subcontractors for work performed under the Contract, or (e) if legal proceedings have been instituted by others than the City in such manner as to interfere with the progress of the work and may subject the City to peril of litigation or outside claims of (f) if the Contractor shall be adjudged a bankrupt or make an assignment for the benefit of creditors, or (g) if in any proceeding instituted by or against the Contractor an order shall be made or entered granting an extension of time of payment, composition, adjustment, modification, settlement or satisfaction of his debts or liabilities, or (h) if a receiver or trustee shall be appointed for the Contractor or the Contractor's property, or (i) if the Contract or any part thereof shall be sublet without the consent of the City being first obtained in writing, or (j) if this Contract or any right, monies, or claim thereunder shall be assigned by the Contractor, otherwise than as herein specified, or (k) if the Contractor shall fail in any manner of substance to observe the provisions of this Contract, or (l) if any of the work, machinery, or equipment shall be defective, and shall not be replaced as herein provided, or (m) if the work to be done under this Contract shall be abandoned, then such fact or conditions shall be certified by the Engineer and thereupon the City without prejudice to any other rights or remedies of the City, shall have the right to declare the Contractor in default and so notify the Contractor by a written notice, setting forth the ground or grounds upon which such default is declared and the Contractor must discontinue the work, either as a portion of the work or the whole thereof, as directed.

ARTICLE 9.02 CONTRACTOR'S DUTY UPON DEFAULT

Upon receipt of notice that his Contract is in default, the Contractor shall immediately discontinue all further operations on the work or such part thereof, and shall immediately quit the site or such part thereof, leaving untouched all plant, materials, equipment, tools, and supplies.

ARTICLE 9.03 COMPLETION OF DEFAULTED WORK

The City, after declaring the Contractor in default, may then have the work completed or the defective equipment or machinery replaced or anything else done to complete the work in strict accordance with the Contract Documents by such means and in such manner, by Contract with or without public letting, or otherwise, as it may deem advisable,

utilizing for such purpose without additional cost to the City such of the Contractor's plant, materials, equipment, tools, and supplies remaining on the site, and also such subcontractors as it may deem advisable.

The City shall reimburse all parties, including itself, for the expense of such completion, including liquidated damages, if any, and the cost of reletting. The City shall deduct this expense from monies due or to become due to the Contractor under this Contract, or any part thereof, and in case such expense is more than the sum remaining unpaid of the original contract price, the Contractor and his sureties shall pay the amount of such deficiency to the City.

ARTICLE 9.04 PARTIAL DEFAULT
In case the City shall declare the Contractor in default as to a part of the work only, the Contractor shall discontinue such part, shall continue performing the remainder of the work in strict conformity with the terms of the Contract, and shall in no way hinder or interfere with any other contractor or person whom the City may engage to complete the work as to which the Contractor was declared in default.

SECTION 10
PAYMENTS

ARTICLE 10.01 PRICES
For the Contractor's complete performance of the work, the City will pay and the Contractor agrees to accept, subject to the terms and conditions hereof, the lump sum prices or unit prices in the Contractor's Proposal and the award made therein, plus the amount required to be paid for any extra work ordered under Article 7.02 hereof, less credit for any work omitted pursuant to Article 7.04 hereof. Under unit price items, the number of units actually required to complete the work under the Contract may be more than stated in the Proposal. The Contractor agrees that no claim will be made for any damages or for loss of profits because of a difference between the quantities of the various classes of work assumed and stated in the Proposal Form as a basis for comparing Proposals and the quantities of work actually performed.

The sum as awarded for any lump sum Contract or lump sum Contract Item shall represent payment in full for all of the various classes of work, including materials, equipment, and labor necessary or required to complete, in conformity with the Contract Document, the entire work shown, indicated or specified under the lump sum Contract or lump sum Contract Item.

The amount as awarded as a unit price for any unit price Contact Item shall represent payment in full for all the materials, equipment, and labor necessary to complete, in conformity with the Contract Documents, each unit of work shown, specified, or required under the said unit price Contract Item.

No payment other than the amount as awarded will be made for any class of work included in a lump sum Contract Item or a unit price Contract Item, unless specific provision is made therefor in the Contract Documents.

ARTICLE 10.02 SUBMISSION OF BID BREAKDOWN
Within fifteen (15) days after the execution of this Contract, the Contractor must submit to the Engineer in duplicate an acceptable breakdown of the lump sums and unit prices bid for items of the Contract, showing the various operations to be performed under the Contract, as described in the progress schedule required under Article 4.02 hereof, and the value of each of such operations, the total of such items to equal the total price bid. The Contractor shall also submit such other information relating to the bid prices as may be required and shall revise the bid breakdown as directed. Thereafter, the breakdown may be used for checking the Contractor's applications for partial payments hereunder but shall not be binding upon the City or the Engineer for any purpose whatsoever.

ARTICLE 10.03 REPORTS, RECORDS AND DATA
The Contractor shall furnish to the Engineer such schedules of quantities and costs, progress schedules, reports, invoices, delivery tickets, estimates, records, and other data as the Engineer may request concerning work performed or to be performed and the materials furnished under the Contract.

ARTICLE 10.04 PAYMENTS BY CONTRACTOR
The Contractor shall pay (a) for all transportation and utility services not later than the 20th day of the calendar month following that in which such services are rendered, (b) for all materials, tools, and equipment delivered at the site of the project, and the balance of the cost thereof not later than the 30th day following the completion of that part of the work in or on which such materials, tools, and equipment are incorporated or used, and (c) to each of his subcontractors, not later than the 5th day following each payment to the Contractor, the respective amounts allowed the Contractor on account of the work performed by his subcontractors, to the extent of each subcontractor's interest therein; and proof of such payments or releases therefor shall be submitted to the Engineer upon request.

ARTICLE 10.05 PARTIAL PAYMENTS
On or about the first of each month, the Contractor shall make and certify an estimate, on forms prescribed by the City, of the amount and fair value of the work done, and may apply for partial payment therefor. The Contractor shall revise the estimate as the Engineer may direct. When satisfactory progress has been made, and shows that the value of the work completed since the last payment exceeds one percent (1%) of the total Contract price in amount, the Engineer will issue a certificate that such work has been completed and the value thereof. The City will then issue a voucher to the Contractor in accordance with the following schedule:

FOR CONTRACT AMOUNTS UNDER $250,000
(A)In the amount of ninety percent (90%) of the value of the work completed as certified until construction is one hundred percent (100%) complete (operational or beneficial occupancy), the withheld amount may be reduced below ten percent (10%), at the Engineer's option, to only that amount necessary to assure completion.

FOR CONTRACT AMOUNTS OVER $250,000

(A)In the amount of ninety percent (90%) of the value of the work completed as certified until construction is fifty percent (50%) complete.

(B)When the dollar value, as determined by the Engineer, of satisfactorily completed work in place is greater than fifty percent (50%) of the original contract price, vouchers for partial payment will be issued by the City to the Contractor in the amount of one hundred percent (100%) of the value of the work, above 50%, completed as certified for that payment period.

(C)If the Contractor has performed satisfactorily and the work is substantially complete (operational or beneficial occupancy) the withheld amount may be reduced, at the Engineer's option, to only that amount necessary to assure completion.

In addition to the Conditions set forth in (A), (B), and (C) above, payments will always be less any sums that may be retained or deducted by the City under the terms of any of the contract documents and less any sums that may be retained to cover monetary guarantees for equipment, materials or progress performance.

Payment on estimates made on or about the first of the month may be expected on or about the 20th of the month.

Unless specified otherwise in the Contract Items, the delivered cost of equipment and nonperishable materials suitably stored at the site of the work and tested for adequacy may be included in the Contractor's application for partial payment provided, however, that the Contractor shall furnish evidence satisfactory to the City that the Contractor is the unconditional owner and in possession of such materials or equipment. The amount to be paid will be 90 percent of the invoice cost to the Contractor which cost shall be supported by receipted bills within 30 days of the date of payment by the City to the Contractor. Such payment shall not relieve the Contractor from full responsibility for completion of the work and for protection of such materials and equipment until incorporated in the work in a permanent manner as required by the Contract Documents.

Before any payment will be made under this Contract, the Contractor and every subcontractor, if required, shall deliver to the Engineer a written, verified statement, in satisfactory form, showing in detail all amounts then due and unpaid by such Contractor or subcontractor to all laborers, workmen, and mechanics, employed by him under the Contract for the performance of the work at the site thereof, for daily or weekly wages, or to other persons for materials, equipment, or supplies delivered at the site of the work during the period covered by the payment under consideration.

ARTICLE 10.06 FINAL PAYMENT

Under determination of satisfactory completion of the work under this Contract as provided in Article 4.07 hereof, the Engineer will prepare the final estimate showing the value of the completed work. This estimate will be prepared within 30 days after the date of completion or as soon thereafter as the necessary measurements and computations can be made. All prior certificates and estimates, being approximate only, are subject to correction in the final estimate and payment.

When the final estimate has been prepared and certified by Engineer, he will submit to the Mayor and City Council the final certificate stating that the work has been completed and the amount based on the final estimate remaining due to the Contractor. The City will then accept the work as fully completed and will, not later than 30 days after the final acceptance, as defined in Article 1.02, of the work done under this Contract, pay the Contractor the entire amount so found due thereunder after deduction of all previous payments and all percentages and amounts to be kept and retained under provisions of this Contract; provided, however, and it is understood and agreed that, as a precedent to receiving final payment, the Contractor shall submit to the City a sworn affidavit that all bills for labor, service, materials, and subcontractors have been paid and that there are no suits pending in connection with this work. The City, at its option, may permit the Contractor to execute a separate surety bond in a form satisfactory to the City. The surety bond shall be in the full amount of the suit or suits.

Neither the final payment nor any part of the retained percentage shall be paid until the Contractor, if required, shall furnish the City with a complete release from any should remain unsatisfied after all payments are made, the Contractor shall refund to the City all monies which the City may be compelled to pay in discharging such claim, including incidental costs and attorney's fees.

ARTICLE 10.07 ACCEPTANCE OF FINAL PAYMENT

The acceptance by the Contractor, or by anyone claiming by or through him, of the final payment shall operate as and shall be a release to the City and every officer and agent thereof from any and all claims and liability to the Contractor for anything done or furnished in connection with the work or project and for any act or neglect of the Contractor or of any others relating to or affecting the work. No payment, however, final or otherwise, shall operate to release the Contractor or his sureties from any obligations under this Contract or the Performance Bond.

SECTION 11
MISCELLANEOUS PROVISIONS

ARTICLE 11.01 CONTRACTOR'S WARRANTIES

In consideration of, and to induce the award of this contract to him, the Contractor represents and warrants:

(a)That he is not in arrears to the City upon debt or contract, and he is not a defaulter, as surety, contractor, or otherwise.

(b)That he is financially solvent and sufficiently experienced and competent to perform the work.

(c)That the work can be performed as called for by the Contract Documents.

(d)That the facts stated in his proposal and the information given by him are true and correct in all respects.

(e)That he is fully informed regarding all the conditions affecting the work to be done and labor and materials to be

furnished for the completion of this Contract, and that his information was secured by personal investigation and research.

ARTICLE 11.02 PATENTED DEVICES, MATERIAL AND PROCESSES

It is mutually understood and agreed that Contract prices include all royalties and costs arising from patents, trademarks, and copyrights in any way involved in the work. Whenever the Contractor is required or desires to use any design, device, material, or process covered by letters of patent or copyright, the Contractor shall indemnify and save harmless the City, its officers, agents and employees from any and all claims for infringement by reason of the use of any such patented design, device, tool, material, equipment, or process, to be performed under the Contract, and shall indemnify the said City, its officers, agents, and employees for any costs, expenses, and damages which may be incurred by reason of such infringement at any time during the prosecution or after completion of the work.

ARTICLE 11.03 SUITS AT LAW

In case any action at law or suit in equity may or shall be brought against the City or any of its officers, agents, or employees for or on account of the failure, omission, or neglect of the Contractor or his subcontractors, employees, or agents, to do or perform any of the covenants, acts, matters, or things by this Contract undertaken to be done or performed by the Contractor of his subcontractors, employees, or agents, or from any injuries done to property or persons and caused by the negligence or alleged negligence of the Contractor of his subcontractors, employees, or agents, or in any other manner arising out of the performance of this Contract, then the Contractor shall immediately assume and take charge of the defense of such actions or suits in like manner and to all intents and purposes as if said actions or suits have been brought directly against the Contractor, and the Contractor shall also indemnity and save harmless the City, its officers, agents, and employees from any and all loss, cost or damage whatever arising out of such actions or suits, in like manner and to all intents and purposes as if said actions or suits have been brought directly against the Contractor.

The Contractor shall and does hereby assume all liability for and agrees to indemnify the City or its Engineer against any or all loss, costs, damages, and liability for any or by reason of any lien, claims or demands, either for materials purchased or for work performed by laborers, mechanics, and others and from any damages, costs, actions, or causes of action and judgement arising from injuries sustained by mechanics, laborers, or other persons by reason of accidents or otherwise, whether caused by the carelessness or inefficiency or neglect of said Contractor, his subcontractors, agents, employees, workmen or otherwise.

ARTICLE 11.04 CLAIMS FOR DAMAGES

If the Contractor shall claim compensation for any damage sustained, other than for extra or disputed work covered by Article 7.02 and 7.03 hereof, by reason of any act or omission of the City, its agents, or any persons, he shall, within five days after sustaining such damage, make and deliver to the Engineer a written statement of the nature of the damage sustained and of the basis of the claim against the City. On or before the 15th of the month succeeding that in which any damage shall have been sustained, the Contractor shall make and deliver to the Engineer an itemized statement of the details and amounts of such damage, duly verified by the Contractor. Unless such statements shall be made delivered within the times aforesaid, it is stipulated that and all claims for such compensation shall be forfeited and invalidated, and the Contractor shall not be entitled to payment on account of such claims.

ARTICLE 11.05 NO CLAIMS AGAINST INDIVIDUALS

No claim whatsoever shall be made by the Contractor against any officer, agent, employee of the City for, or on account of, anything done or omitted to be done in connection with this Contract.

ARTICLE 11.06 LIABILITY UNAFFECTED

Nothing herein contained shall in any manner create any liability against the City on behalf of any claim for labor, services, or materials, or of subcontractors, and nothing herein contained shall affect the liability of the Contractor or his sureties to the City or to any workmen or materialsmen upon bond given in connection with this Contract.

ARTICLE 11.07 INDEMNIFICATION PROVISIONS

Whenever there appears in this Agreement, or in the other Contact Documents made a part hereof, an indemnification provision within the purview of Chapter 725.06, Laws of Florida, the monetary limitation on the extent of the indemnification under each such provision shall be One Million Dollars or a sum equal to the total Contract price, whichever shall be the greater.

ARTICLE 11.08 UNLAWFUL PROVISIONS DEEMED STRICKEN

If this contract contains any unlawful provisions not an essential part of the Contract and which shall not appear to have a controlling or material inducement to the making thereof, such provisions shall be deemed of no effect and shall, upon notice by either party, be deemed stricken from the Contract without affecting the binding force of the remainder.

ARTICLE 11.09 LEGAL PROVISIONS DEEMED INCLUDED

Each and every provision of any law and clause required by law to be inserted in this Contract shall be deemed to be inserted herein, and the Contract shall be read and enforced as though it were included herein and if, through mistake or otherwise, any such provision is not inserted or is not correctly inserted, then upon application of either party the Contract shall forthwith be physically amended to make such insertion.

ARTICLE 11.10 DEATH OR INCOMPETENCY OF CONTRACTOR

In the event of death or legal incompetency of a Contractor who shall be an individual or surviving member of a contracting firm, such death or adjudication of incompetency

shall not terminate the Contract, but shall act as default hereunder to the effect provided in Article 9.01 hereof and the estate of the Contractor and his surety shall remain liable hereunder to the same extent as though the Contractor had lived. Notice of default, as provided in Article 9.01 hereof, shall not be required to be given in the event of such death or adjudication of incompetency.

ARTICLE 11.11 NUMBER AND GENDER OF WORDS
Whenever the context so admits or requires, all references herein in one number shall be deemed extended to and including the other number, whether singular or plural, and the use of any gender shall be applicable to all genders.

ARTICLE 11.12 ACCESS TO RECORDS
Representatives of Federal Agencies, if applicable, and the State of Florida shall have access to the work whenever it is in preparation of progress. On federally assisted projects the Federal Agency, the Comptroller General of the United States, or any authorized representative shall have access to any books, documents, papers, and records of the Contractor which are pertinent to the project for the purpose of making audit, examination, excerpts, and transcription thereof.

SECTION 12
LABOR STANDARDS

ARTICLE 12.01 LABOR STANDARDS
The Contractor shall comply with all of the regulations set forth in "Labor Standards Provisions for Federally Assisted Construction Contracts", which may be attached, and any applicable Florida Statutes.

ARTICLE 12.02 NOTICE TO LABOR UNIONS
If required, the Contractor shall provide Labor Unions and other organizations of workers, and shall post, in a conspicuous place available to employees or applicants for employment, a completed copy of the form entitled "Notice to Labor Unions or Other Organizations of Workers" attached to and made a part of this Agreement.

ARTICLE 12.03 SAFETY AND HEALTH REGULATIONS
The Contractor shall comply with the Department of Labor Safety and Health Regulations for construction promulgated under the Occupational Safety and Health Act of 1970 (PL 91- 596) and under Section 107 of the Contract Work Hours and Safety Standards Act (PL 91-54). Nothing in these Acts shall be construed to supersede or in any manner affect any worker's compensation law or statutory rights, duties, or liabilities of employers and employees under any law with respect to injuries, diseases, or death of employees arising out of, or in the course of, employment.

ARTICLE 12.04 EEO AFFIRMATIVE ACTION REQUIREMENTS
The Contractor understands and agrees to be bound by the equal opportunity requirements of Federal regulations which shall be applicable throughout the performance of work under this Contract. The Contractor also agrees to similarly bind contractually each subcontractor. In policies, the Contractor agrees to engage in Affirmative Action directed at promoting and ensuring equal employment opportunity in the work force used under the Contract (and the Contractor agrees to require contractually the same effort of all subcontractors whose subcontractors exceed $100,000). The Contractor understands and agrees that "Affirmative Action" as used herein shall constitute a good faith effort to achieve and maintain minority employment in each trade in the on-site work force used on the Contract.

ARTICLE 12.05 PREVAILING RATES OF WAGES
Florida's prevailing wage law was repealed effective April 25, 1979.

For Federally assisted projects, appropriate prevailing wage rate determinations are indicated on pages beginning with WR-1.

* * * * * * *

IN WITNESS THEREOF, the parties have hereunto set their hands and seals, and such of them as are corporation have caused these present to be signed by their duly authorized officers.

CITY OF TAMPA, FLORIDA

_____
Bob Buckhorn, Mayor
(SEAL)

ATTEST:

_____
City Clerk

Approved as to Form:
The execution of this document was authorized
by Resolution No. _____

_____
Rachel S. Peterkin, Assistant City Attorney

Contractor

By:_____
(SEAL)

Title:

ATTEST:

_____
Secretary

TAMPA AGREEMENT (ACKNOWLEDGMENT OF PRINCIPAL)

STATE OF)
) SS:
COUNTY OF)

For a Corporation:

STATE OF _____
COUNTY OF _____

The foregoing instrument was acknowledged before me this ___ of _____, 20___ by _____ of _____, a _____ corporation, on behalf of the corporation. He/she is ___ personally known or has ___ produced _____ as identification.

_____
Notary

My Commission Expires:

_____

For an Individual:

STATE OF _____
COUNTY OF _____

The foregoing instrument was acknowledged before me this ___ of _____, 20___ by _____ who is ___ personally known to me or has ___ produced _____ as identification.

_____
Notary

My Commission Expires:

_____

For a Firm:

STATE OF _____
COUNTY OF _____

The foregoing instrument was acknowledged before me this ___ of _____, 20___ by _____ who signed on behalf of the said firm. He/she is ___ personally known or has ___ produced _____ as identification.

_____
Notary

My Commission Expires:

_____

_____

PUBLIC CONSTRUCTION BOND

Bond No. (enter bond number)_____

Name of Contractor:_____

Principal Business Address of Contractor:_____

_____

Telephone Number of Contractor:_____

Name of Surety (if more than one list each):_____

_____

Principal Business Address of Surety:_____

_____

Telephone Number of Surety:_____

Owner is The City of Tampa, Florida

Principal Business Address of Owner: 306 E Jackson St, Tampa, FL 33602

Contract Administration Department (280A4N)

Telephone Number of Owner: 813/274-8456

Contract Number Assigned by City to contract which is the subject of this bond:_____

Legal Description or Address of Property Improved or Contract Number is:_____

_____

_____

_____

General Description of Work and Services:_____

_____

_____

_____

KNOW ALL MEN BY THESE PRESENTS That we, _____

_____
(Name of Contractor)

as Principal, hereinafter called CONTRACTOR, of the State of _____, and

_____(Name of Surety)
a corporation organized and existing under and by virtue of the laws of the State of _____, and regularly authorized to do business in the State of Florida, as SURETY, are held and firmly bound unto the City of Tampa, a municipal corporation organized and existing under the laws of the State of Florida, hereinafter called Owner, in the penal sum of _____Dollars and _____Cents ($_____), lawful money of the United States of America, for the payment whereof well and truly to be made, we bind ourselves, our heirs, executors, and administrators, successors and assigns, jointly and severally, firmly by these presents.

THE CONDITION OF THIS BOND is that if Principal:

1. Performs the contract dated _____, _____, 20___, between Principal and Owner for construction of _____, the contract being made a part of this bond by reference, in the time and in the manner prescribed in the contract; and

2. Promptly makes payments to all claimants, as defined in Section 255.05(1) (Section 713.01), Florida Statutes, supplying Principal with labor, materials, or supplies, used directly or indirectly by Principal in the prosecution of the work provided for in the contract; and

3. Pays Owner all losses, damages, expenses, costs, and attorney's fees, including appellate proceedings, that Owner sustains because of a default by Principal under the contract; and

4. Performs the guarantee of all work and materials furnished under the contract for the time specified in the contract, then this bond is void; otherwise it remains in full force.

5. Contractor and Surety acknowledge that the Work for which this bond has been issued may be one of several such contract documents for a group of projects. This bond does not secure covenants to pay for or to perform design services survey or program management services. The Owner/Obligee is expected to reasonably account for damages that are caused to Owner with respect to Principal's (Contractor's) default in performance of the scope of the Work incorporated by reference into the bond, and notwithstanding any contractual or common law remedy permitted to Owner as against Contractor, the obligation of Surety for any damages under this bond shall be determined by the cost of completion of the Work less the contract balance unpaid upon default of Contractor for the Work plus liquidated damages at the rate of $500.00 per day for delays by the Contractor and/or Surety in reaching substantial completion.

6. The notice requirements for claimants and conditions for entitlement to payment set forth in Section 255.05, Fla. Stat. and the limitations period to actions upon Section 255.05, Fla. Stat. bonds apply to claimants seeking payment from surety under this bond. Any action instituted by a claimant under this bond for payment must be in accordance with the notice and time limitation provisions in Section 255.05, Florida Statutes.

7. The Surety, for value received, hereby stipulates and agrees that no changes, extensions of time, alterations or additions to the terms of the contract documents or other Work to be performed hereunder, or the specifications referred to therein shall in any way affect its obligations under this bond, and it does hereby waive notice of any such changes, extensions of time, alterations or additions to the terms of the Contract or to Work or to the specifications.

8. The above SURETY states that it has read all of the Contract Documents made by the CONTRACTOR with the CITY, hereto attached, and the terms and conditions of the contract and work, and is familiar therewith and in particular those portions of the Agreement concerning the guaranty of such CONTRACTOR for a period of one year following the date of the final acceptance of the completed work under the Contract by the CITY, all of which this BOND includes.

DATED ON _____, 20___

_____
(Name of Principal)

_____
(Principal Business Address)

By _____

Title _____

_____
Telephone Number of Principal

Countersignature:

_____
(Name of Local Agency)

_____
(Address of Resident Agent)

By _____

Title _____

_____
Telephone Number of Local Agency

_____
(Name of Surety)

_____
(Surety Address)

By _____
(As Attorney in Fact)*

_____
Telephone Number of Surety

Accepted by City of Tampa:

By _____
Bob Buckhorn, Mayor

Date: _____ 20____

Approved as to legal sufficiency:

By _____
Assistant City Attorney

Date: _____, 20____

*(As Attorney in Fact) attach Power of Attorney and Current Certificate with Original Signature

SPECIFICATIONS
GENERAL PROVISIONS

SECTION 1
SCOPE AND INTENT

G-1.01 DESCRIPTION
The work to be done consists of the furnishing of all labor, materials and equipment, and the performance of all work included in this Contract.

G-1.02 WORK INCLUDED
The Contractor shall furnish all labor, superintendence, materials, plant, power, light, heat, fuel, water, tools, appliances, equipment, supplies, and other means of construction necessary or proper for performing and completing the work. He shall obtain and pay for all required permits. He shall perform and complete the work in the manner best calculated to promote rapid construction consistent with safety of life and property and to the satisfaction of the Engineer, and in strict accordance with the Contract Documents. The Contractor shall clean up the work and maintain it during and after construction, until accepted, and shall do all work and pay all costs incidental thereto. He shall repair or restore all structures and property that may be damaged or disturbed during performance of the work.

The cost of incidental work described in these General Provisions, for which there are no specific Contract Items, shall be considered as part of the overhead cost of doing the work and shall be included in the prices for the various Contract Items. No additional payment will be made therefor.

The Contractor shall provide and maintain such modern plant, tools, and equipment as may be necessary, in the opinion of the Engineer, to perform in a satisfactory and acceptable manner all the work required by this Contract. Only equipment of established reputation and proven efficiency shall be used. The Contractor shall be solely responsible for the adequacy of his plant and equipment, prior approval of the Engineer notwithstanding.

G-1.03 PUBLIC UTILITY INSTALLATIONS AND STRUCTURES
Public utility installations and structures shall be understood to include all poles, tracks, pipes, wires, conduits, house service connections, vaults, manholes, and all other appurtenances and facilities pertaining thereto whether owned or controlled by the City, other governmental bodies or privately owned by individuals, firms, or corporations, and used to serve the public with transportation, traffic control, gas, electricity, telephone, sewerage, drainage, water or other public or private property which may be affected by the work.

The Contract Documents contain data relative to existing public utility installations and structures above and below the ground surface. These data are not guaranteed as to their completeness or accuracy and it is the responsibility of the Contractor to make his own investigations to inform himself fully of the character, condition and extent of all such installations and structures as may be encountered and as may affect the construction operations.

The Contractor shall protect all public utility installations and structures from damage during the work. Access across any buried public utility installation or structure shall be made only in such locations and by means approved by the Engineer. The Contractor shall so arrange his operations as to avoid any damage to these facilities. All required protective devices and construction shall be provided by the Contractor at his expense. All existing public utilities damaged by the Contractor which are shown on the Plans or have been located in the field by the utility shall be repaired by the Contractor, at his expense, as directed by the Engineer. No separate payment shall be made for such protection or repairs to public utility installations or structures.

Public utility installations or structures owned or controlled by the City or other governmental body which are shown on the Plans to be removed, relocated, replaced or rebuilt by the Contractor shall be considered as a part of the general cost of doing the work and shall be included in the prices bid for the various Contract Items. No separate payment shall be made therefor.

Where public utility installations or structures owned or controlled by the City or other governmental body are encountered during the course of the work, and are not indicated on the Plans or in the Specifications, and when, in the opinion of the Engineer, removal, relocation, replacement or rebuilding is necessary to complete the work under this Contract, such work shall be accomplished by the utility having jurisdiction or such work may be ordered, in writing by the Engineer, for the Contractor to accomplish. If such work is accomplished by the utility having jurisdiction it will be carried out expeditiously and the Contractor shall give full cooperation to permit the utility to complete the removal, relocation, replacement or rebuilding as required. If such work is accomplished by the Contractor, it will be paid for as extra work as provided for in Article 7.02 of the Agreement.

The Contractor shall, at all times in performance of the work, employ approved methods and exercise reasonable care and skill so as to avoid unnecessary delay, injury, damage or destruction of public utility installations and structures; and shall, at all times in the performance of the work, avoid unnecessary interference with, or interruption of, public utility services, and shall cooperate fully with the owners thereof to that end.

All City and other governmental utility departments and other owners of public utilities, which may be affected by the work, will be informed in writing by the Engineer within two weeks after the execution of the Contract or Contracts covering the work. Such notice will set out, in general, and direct attention to, the responsibilities of the City and other governmental

utility departments and other owners of public utilities for such installations and structures as may be affected by the work and will be accompanied by one set of Plans and Specifications covering the work under such Contract or Contracts.

In addition to the general notice given by the Engineer, the Contractor shall give written notice to all City and other governmental utility departments and other owners of public utilities of the location of his proposed construction operations, at least forty-eight (48) hours in advance of breaking ground in any area or on any unit of the work. This can be accomplished by making the appropriate contact with the "Underground Utility Notification Center for Excavators (Call Candy)".

The maintenance, repair, removal, relocation, or rebuilding of public utility installations and structures, when accomplished by the Contractor as herein provided, shall be done by methods approved by the Engineer.

SECTION 2
PLANS AND SPECIFICATIONS

G-2.01 PLANS
The Plans referred to in the Contract Documents bear the general project name and number as shown in the Notice To Bidders.

When obtaining data and information from the Plans, figures shall be used in preference to scaled dimensions, and large scale drawings in preference to small scale drawings.

G-2.02 COPIES FURNISHED TO CONTRACTOR
After the Contract has been executed, the Contractor will be furnished with five sets of paper prints, the same size as the original drawings, of each sheet of the Plans and five copies of the Specifications. Additional copies of the Plans and Specifications, when requested, may be furnished to the Contractor at cost of reproduction.

The Contractor shall furnish each of the subcontractors, manufacturers, and material suppliers such copies of the Contract Documents as may be required for his work.

G-2.03 SUPPLEMENTARY DRAWINGS
When, in the opinion of the Engineer, it becomes necessary to explain more fully the work to be done or to illustrate the work further or to show any changes which may be required, drawings known as Supplementary Drawings, with specifications pertaining thereto, will be prepared by the Engineer and five paper prints thereof will be given to the Contractor.

The Supplementary Drawings shall be binding upon the Contractor with the same force as the Plans. Where such Supplementary Drawings require either less or more than the estimated quantities of work, credit to the City or compensation therefor to the Contractor shall be subject to the terms of the Agreement.

G-2.04 CONTRACTOR TO CHECK PLANS AND DATA
The Contractor shall verify all dimensions, quantities, and details shown on the Plans, Supplementary Drawings, Schedules, Specifications, or other data received from the Engineer, and shall notify him of all errors, omissions, conflicts, and discrepancies found therein. Failure to discover or correct errors, conflicts or discrepancies shall not relieve the Contractor of full responsibility for unsatisfactory work, faulty construction or improper operation resulting therefrom nor from rectifying such conditions at his own expense. He will not be allowed to take advantage of any errors or omissions as full instructions will be furnished by the Engineer, should such errors or omissions be discovered. All schedules are given for the convenience of the Engineer and the Contractor and are not guaranteed to be complete. The Contractor shall assume all responsibility for the making of estimates of the size, kind, and quality of materials and equipment included in work to be done under the Contract.

G-2.05 SPECIFICATIONS
The specifications consist of four parts, the General Provisions, the Technical Specifications, the Special Provisions and the Contract Items. The General Provisions and Technical Specifications contain general requirements which govern the work. The Special Provisions and the Contract Items modify and supplement these by detailed requirements for the work and shall always govern, whenever there appears to be conflict.

G-2.06 INTENT
All work called for in the Specifications applicable to this Contract, but not shown on the Plans in their present form, or vice versa, shall be of like effect as if shown or mentioned in both. Work not specified in either the Plans or in the Specifications, but involved in carrying out their intent or in the complete and proper execution of the work, is required and shall be performed by the Contractor as though it were specifically delineated or described.

The apparent silence of the Specifications as to any detail, or the apparent omission from them of a detailed description concerning any work to be done and materials to be furnished, shall be regarded as meaning that only the best general practice is to prevail and that only material and workmanship of the best quality is to be used, and interpretation of these Specifications shall be made upon that basis.

SECTION 3
WORKING DRAWINGS

G-3.01 SCOPE
The Contractor shall promptly prepare and submit layout, detail and shop drawings to insure proper construction, assembly, and installation of the work using those materials and methods as hereafter specified under the Technical Specifications, Special Provisions and Contract Items.

These drawings shall accurately and distinctly present the following:

a. All working and erection dimensions.
b. Arrangements and sectional views.
c. Necessary details, including complete information for making connections between work under this Contract and work under other Contracts.
d. Kinds of materials and finishes.
e. Parts listed and description thereof.

Drawings for mechanical equipment shall present, where applicable, such data as dimensions, weight and performance characteristics. These data shall show conformance with the performance characteristics and other criteria incorporated in the Plans and Specifications.

Each drawing shall be dated and shall contain the name of the project, Division number and description, the technical specifications section number, names of equipment or materials and the location at which the equipment or materials are to be installed. Location shall mean both physical location and location relative to other connected or attached material. The Engineer will return unchecked any submittal which does not contain complete data on the work and full information on related matters.

Stock or standard drawings will not be accepted for review unless full identification and supplementary information is shown thereon in ink or typewritten form.

The Contractor shall review all working drawing submittals before transmitting them to the Engineer to determine that they comply with requirements of the Specifications. Drawings which are incomplete or are not in compliance with the Contract Documents shall not be submitted for processing by the Engineer. The Contractor shall place his stamp of approval on all working drawings submitted to the Engineer to indicate compliance with the above.

G-3.02 APPROVAL
If the working drawings show departures from the Contract requirements, the Contractor shall make specific mention thereof in his letter of submittal; otherwise approval of such submittals shall not constitute approval of the departure. Approval of the drawings shall constitute approval of the subject matter thereof only and not of any structure, material, equipment, or apparatus shown or indicated.

The approval of drawings will be general and shall not relieve the Contractor of responsibility for the accuracy of such drawings, nor for the proper fitting and construction of the work, nor for the furnishing of materials or work required by the Contract and not indicated on the drawings. No work called for by working drawings shall be done until such drawings have been approved by the Engineer.

The procedure in seeking approval of the working drawings shall be as follows:

1.The Contractor shall submit four complete sets of drawings and other descriptive data together with one copy of a letter of transmittal to the Engineer for approval. The letter of transmittal shall contain the name of the project, contract number, technical specifications section number, the name of the Contractor, a list of drawings with numbers and titles, and any other pertinent information.

2.Drawings or descriptive data will be stamped "Approved", "Approved Subject to Corrections Marked", or "Examined and Returned for Correction" and one copy with a letter of transmittal will be returned to the Contractor.

3.If a drawing or other data is stamped "Approved", the Contractor shall insert the date of approval on five additional copies of the document and transmit the five copies to the Engineer together with one copy of a letter of transmittal containing substantially the same information as described in Instruction 1. above.

4.If a drawing or other data is stamped "Approved Subject to Corrections Marked", the Contractor shall make the corrections indicated and proceed as in Instruction 3., above.

5.If a drawing or data is stamped "Examined and Returned for Correction", the Contractor shall make the necessary corrections and resubmit the documents as set forth in Instruction 1., above. The letter of transmittal shall indicate that this is a resubmittal.

The Contractor shall revise and resubmit the working drawings as required by the Engineer, until approval thereof is obtained.

SECTION 4
MATERIALS AND EQUIPMENT

G-4.01 GENERAL REQUIREMENTS
All materials, appliances, and types or methods of construction shall be in accordance with the Specifications and shall, in no event, be less than that necessary to conform to the requirements of any applicable laws, ordinances, and codes.

All materials and equipment shall be new, unused, and correctly designed. They shall be of standard first grade quality, produced by expert personnel, and intended for the use for which they are offered. Materials or equipment which, in the opinion of the Engineer, are inferior or of a lower grade than indicated, specified, or required will not be accepted.

The quality of Workmanship and Materials entering into the work under this Contract shall conform to the requirements of the pertinent sections, clauses, paragraphs, and sentences, both directly and indirectly applicable thereto, of that part of the Technical Specifications, whether or not direct reference to such occurs in the Contract Items.

Equipment and appurtenances shall be designed in conformity with ANSI, ASME, IEEE, NEMA and other

generally accepted standards and shall be of rugged construction and of sufficient strength to withstand all stresses which may occur during fabrication, testing, transportation, installation, and all conditions of operation. All bearings and moving parts shall be adequately protected against wear by bushings or other approved means and shall be fully lubricated by readily accessible devices. Details shall be designed for appearance as well as utility. Protruding members, joints, corners, gear covers, and the like, shall be finished in appearance. All exposed welds shall be ground smooth and the corners of structural shapes shall be mitered.

Equipment shall be of the approximate dimensions as indicated on the Plans or as specified, shall fit the spaces shown on the Plans with adequate clearances, and shall be capable of being handled through openings provided in the structure for this purpose. The equipment shall be of such design that piping and electrical connections, ductwork, and auxiliary equipment can be assembled and installed without causing major revisions to the location or arrangement of any of the facilities.

Machinery parts shall conform exactly to the dimensions shown on the working drawings. There shall be no more fitting or adjusting in setting up a machine than is necessary in assembling high grade apparatus of standard design. The equivalent parts of identical machines shall be made interchangeable. All grease lubricating fittings on equipment shall be of a uniform type. All machinery and equipment shall be safeguarded in accordance with the safety codes of the ANSI and applicable state and local codes.

G-4.02 MANUFACTURER

The names of proposed manufacturers, suppliers, material, and dealers who are to furnish materials, fixtures, equipment, appliances or other fittings shall be submitted to the Engineer for approval, as early as possible, to afford proper investigation and checking. Such approval must be obtained before shop drawings will be checked. No manufacturer will be approved for any materials to be furnished under this Contract unless he shall be of good reputation and have a plant of ample capacity. He shall, upon the request of the Engineer, be required to submit evidence that he has manufactured a similar product to the one specified and that it has been previously used for a like purpose for a sufficient length of time to demonstrate its satisfactory performance.

All transactions with the manufacturers or subcontractors shall be through the Contractor, unless the Contractor shall request, in writing to the Engineer, that the manufacturer or subcontractor deal directly with the Engineer. Any such transactions shall not in any way release the Contractor from his full responsibility under this Contract.

Any two or more pieces of material or equipment of the same kind, type or classification, and being used for identical types of service, shall be made by the same manufacturer.

G-4.03 REFERENCE TO STANDARDS

Whenever reference is made to the furnishing of materials or testing thereof to conform to the standards of any technical society, organization or body, it shall be construed to mean the latest standard, code, specification or tentative specification adopted and published at the date of advertisement for proposals, even though reference has been made to an earlier standard, and such standards are made a part hereof to the extent which is indicated or intended.

Reference to a technical society, organization or body may be made in the Specifications by abbreviations, in accordance with the following list:

AASHTO for American Association of State Highway and Transportation Officials (formerly AASHO)
ACI for American Concrete Institute
AGMA for American Gear Manufacturer's Association
AFBMA for Anti-Friction Bearing Manufacturer's Association
AISC for American Institute of Steel Construction
AISI for American Iron and Steel Institute
ANSI for American National Standards Institute
ASCE for American Society of Civil Engineers
ASTM for American Society for Testing and Materials
ASME for American Society of Mechanical Engineers
AWS for American Welding Society
AWWA for American Water Works Association
AWPA for American Wood Preservers Association
CEMA for Conveyor Equipment Manufacturers Association
CIPRA for Cast Iron Pipe Research Association
IEEE for Institute of Electrical and Electronic Engineers
IPCEA for Insulated Power Cable Engineers Association
NEC for National Electrical Code
NEMA for National Electrical Manufacturers Association
SAE for Society of Automotive Engineers
SHBI for Steel Heating Boiler Institute
Fed.Spec. for Federal Specifications
Navy Spec. for Navy Department Specifications
U.L.,Inc. for Underwriters' Laboratories, Inc.

When no reference is made to a code, standard or specification, the Standard Specifications of the ANSI, the ASME, the ASTM, the IEEE, or the NEMA shall govern.

G-4.04 SAMPLES

The Contractor shall, when required, submit to the Engineer for approval typical samples of materials and equipment. The samples shall be properly identified by tags and shall be submitted sufficiently in advance of the time when they are to be incorporated into the work, so that rejections thereof will not cause delay. A letter of transmittal, in duplicate, from the Contractor requesting approval must accompany all such samples.

G-4.05 EQUIVALENT QUALITY

Whenever, in the Contract Documents, an article, material, apparatus, equipment, or process is called for by trade name or by the name of a patentee, manufacturer, or dealer or by reference to catalogs of a manufacturer or dealer, it shall be understood as intending to mean and specify the article, material, apparatus, equipment or process designated, or any

equal thereto in quality, finish, design, efficiency, and durability and equally serviceable for the purposes for which it is intended.

Whenever material or equipment is submitted for approval as being equal to that specified, the decision as to whether or not such material or equipment is equal to that specified shall be made by the Engineer.

Upon rejection of any material or equipment submitted as the equivalent of that specifically named in the Contract, the Contractor shall immediately proceed to furnish the designated material or equipment.

Neither the approval by the Engineer of alternate material or equipment as being equivalent to that specified nor the furnishing of the material or equipment specified, shall in any way relieve the Contractor of responsibility for failure of the material or equipment, due to faulty design, material, or workmanship, to perform the functions required of them by the Specifications.

G-4.06 DELIVERY

The Contractor shall deliver materials in ample quantities to insure the most speedy and uninterrupted progress of the work so as to complete thw work within the allotted time. The Contractor shall also coordinate deliveries in order to avoid a delay in, or impediment of, the progress of the work of any related Contractor.

G-4.07 CARE AND PROTECTION

The Contractor shall be solely responsible for properly storing and protecting all materials, equipment, and work furnished under the Contract from the time such materials and equipment are delivered at the site of the work until final acceptance thereof. He shall, at all times, take necessary precautions to prevent injury or damage by water, freezing, or by inclemencies of the weather to such materials, equipment and work. All injury or damage to materials, equipment, or work resulting from any cause whatsoever shall be made good by the Contractor.

The Engineer shall, in all cases, determine the portion of the site to be used by the Contractor for storage, plant or for other purposes. If, however, it becomes necessary to remove and restack materials to avoid impeding the progress of any part of the work or interference with the work to be done by any other Contractor, the Contractor shall remove and restack such materials at his own expense.

G-4.08 TOOLS AND ACCESSORIES

The Contractor shall, unless otherwise stated in the Contract Documents, furnish with each type, kind or size of equipment, one complete set of suitably marked high grade special tools and appliances which may be needed to adjust, operate, maintain, or repair the equipment. Such tools and appliances shall be furnished in approved painted steel cases, properly labeled and equipped with good grade cylinder locks and duplicate keys.

Spare parts shall be furnished as specified.

Each piece of equipment shall be provided with a substantial nameplate, securely fastened in place and clearly inscribed with the manufacturer's name, year of manufacture, serial number, weight and principal rating data.

G-4.09 INSTALLATION OF EQUIPMENT

The Contractor shall have on hand sufficient proper equipment and machinery of ample capacity to facilitate the work and to handle all emergencies normally encountered in work of this character.

Equipment shall be erected in a neat and workmanlike manner on the foundations at the locations and elevations shown on the Plans, unless directed otherwise by the Engineer during installation. All equipment shall be correctly aligned, leveled and adjusted for satisfactory operation and shall be installed so that proper and necessary connections can be made readily between the various units.

The Contractor shall furnish, install and protect all necessary anchor and attachment bolts and all other appurtenances needed for the installation of the devices included in the equipment specified. Anchor bolts shall be as approved by the Engineer and made of ample size and strength for the purpose intended. Substantial templates and working drawings for installation shall be furnished.

The Contractor shall, at his own expense, furnish all materials and labor for, and shall properly bed in non-shrink grout, each piece of equipment on its supporting base that rests on masonry foundations. Grout shall completely fill the space between the equipment base and the foundation.

G-4.10 OPERATING INSTRUCTIONS

The Contractor, through qualified individuals, shall adequately instruct designated employees of the City in the operation and care of all equipment installed hereunder, except for equipment that may be furnished by the City.

The Contractor shall also furnish and deliver to the Engineer three complete sets for permanent files, identified in accordance with Subsection G-3.01 hereof, of instructions, technical bulletins and any other printed matter, such as diagrams, prints or drawings, containing full information required for the proper operation, maintenance, and repair, of the equipment installed and the ordering of spare parts, except for equipment that may be furnished by the City.

In addition to the above three copies, the Contractor shall furnish any additional copies that may be required for use during construction and start-up operations.

G-4.11 SERVICE OF MANUFACTURER'S ENGINEER

The Contract prices for equipment shall include the cost of furnishing a competent and experienced engineer or superintendent who shall represent the manufacturer and shall assist the Contractor, when required, to install, adjust, test and place in operation the equipment in conformity with the Contract Documents. After the equipment is placed in

permanent operation by the City, such engineer or superintendent shall make all adjustments and tests required by the Engineer to provide that such equipment is in proper and satisfactory operating condition, and shall instruct such personnel as may be designated by the City in the proper operation and maintenance of such equipment.

SECTION 5
INSPECTION AND TESTING

G-5.01 GENERAL
The Contractor's attention is hereby directed to Article 3.03 of the Agreement.

Inspection and testing of materials will be performed by the City unless otherwise specified.

For tests specified to be made by the Contractor, the testing personnel shall make the necessary inspections and tests and the reports thereof shall be in such form as will facilitate checking to determine compliance with the Contract Documents. Five copies of the reports shall be submitted and authoritative certification thereof must be furnished to the Engineer as a prerequisite for the acceptance of any material or equipment.

If, in the making of any test of any material or equipment, it is ascertained by the Engineer that the material or equipment does not comply with the Contract, the Contractor will be notified thereof and he will be directed to refrain from delivering said material and equipment, or to remove it promptly from the site or from the work and replace it with acceptable material, without cost to the City.

Tests of electrical and mechanical equipment and appliances shall be conducted in accordance with recognized test codes of the ANSI, ASME, or the IEEE, except as may otherwise be stated herein.

The Contractor shall be fully responsible for the proper operation of equipment during tests and instruction periods and shall neither have nor make any claim for damage which may occur to equipment prior to the time when the City formally takes over the operation thereof.

G-5.02 COSTS
All inspection and testing of materials furnished under this Contract will be performed by the City or duly authorized inspection engineers or inspection bureaus without cost to the Contractor, unless otherwise expressly specified.

The cost of shop and field tests of equipment and of certain other tests specifically called for in the Contract Documents shall be borne by the Contractor and such costs shall be deemed to be included in the contract price.

Materials and equipment submitted by the Contractor as the equivalent to those specifically named in the Contract may be tested by the City for compliance. The Contractor shall reimburse the City for the expenditures incurred in making such tests on materials and equipment which are rejected for noncompliance.

G-5.03 INSPECTIONS OF MATERIALS
The Contractor shall give notice, in writing to the Engineer, sufficiently in advance of his intention to commence the manufacture or preparation of materials especially manufactured or prepared for use in or as part of the permanent construction. Such notice shall contain a request for inspection, the date of commencement and the expected date of completion of the manufacture or preparation of materials. Upon receipt of such notice the Engineer will arrange to have a representative present at such times during the manufacture as may be necessary to inspect the materials or he will notify the Contractor that inspection will be made at a point other than the point of manufacture, or he will notify the Contractor that inspection will be waived. The Contractor must comply with these provisions before shipping any material. Such inspection shall not release the Contractor from the responsibility for furnishing materials meeting the requirements of the Contract Documents.

G-5.04 CERTIFICATE OF MANUFACTURE
When inspection is waived or when the Engineer so requires, the Contractor shall furnish to him authoritative evidence in the form of Certificates of Manufacture that the materials to be used in the work have been manufactured and tested in conformity with the Contract Documents. These certificates shall be notarized and shall include copies of the results of physical tests and chemical analyses, where necessary, that have been made directly on the product or on similar products of the manufacturer.

G-5.05 SHOP TESTS OF OPERATING EQUIPMENT
Each piece of equipment for which pressure, duty, capacity, rating, efficiency, performance, function, or special requirements are specified shall be tested in the shop of the maker in a manner which shall conclusively prove that its characteristics comply fully with the requirements of the Contract Documents. No such equipment shall be shipped to the work until the Engineer notifies the Contractor, in writing, that the results of such tests are acceptable.

Five copies of the manufacturer's actual test data and interpreted results thereof, accompanied by a certificate of authenticity sworn to by a responsible official of the manufacturing company, shall be forwarded to the Engineer for approval.

The cost of the shop tests and of furnishing manufacturer's preliminary and shop test data of operating equipment shall be borne by the Contractor.

G-5.06 PRELIMINARY FIELD TESTS
As soon as conditions permit, the Contractor shall furnish all labor, materials, and instruments and shall make preliminary field tests of equipment. If the preliminary field tests disclose any equipment furnished under this Contract which does not comply with the requirements of the Contract Documents, the Contractor shall, prior to the acceptance tests, make all changes, adjustments, and replacements required.

G-5.07 FINAL FIELD TESTS
Upon completion of the work and prior to final payment, all equipment and appliances installed under this Contract shall be subjected to acceptance tests as specified or required to prove compliance with the Contract Documents.

The Contractor shall furnish labor, fuel, energy, water and all other materials, equipment, and instruments necessary for all acceptance tests, at no additional cost to the City.

G-5.08 FAILURE OF TESTS
Any defects in the materials and equipment or their failure to meet the tests, guarantees or requirements of the Contract Documents shall be promptly corrected by the Contractor by replacements or otherwise. The decision of the Engineer as to whether or not the Contractor has fulfilled his obligations under the Contract shall be final and conclusive. If the Contractor fails to make those corrections or if the improved materials and equipment, when tested, shall again fail to meet the guarantees or specified requirements, the City, notwithstanding its partial payment for work, and materials and equipment, may reject the materials and equipment and may order the Contractor to remove them from the site at his own expense.

In case the City rejects any materials and equipment, then the Contractor shall replace the rejected materials and equipment within a reasonable time. If he fails to do so, the City may, after the expiration of a period of thirty calendar days after giving him notice in writing, proceed to replace such rejected materials and equipment, and the cost thereof shall be deducted from any compensation due or which may become due the Contractor under this Contract.

The City agrees to obtain other equipment within a reasonable time and the Contractor agrees that the City may use the equipment furnished by him without rental or other charges until the new equipment is obtained.

Materials or work in place that fails to pass acceptability tests shall be retested at the direction of the construction engineer all such retests shall be at the Contractor's expense. The rates charged shall be in accordance with the Department of Public Works current annual inspection contract which is available for inspection at the offices of the Department of Public Works.

G-5.09 FINAL INSPECTION
The procedures for final inspection shall be in accordance with the provisions of Article 4.07 of the Agreement. During such final inspections, the work shall be clean and free from water. In no case will the final estimate be prepared until the Contractor has complied with all the requirements set forth and the Engineer has made his final inspection of the entire work and is satisfied that the entire work is properly and satisfactorily cosntructed in accordance with the requirements of the Contract Documents.

SECTION 6

TEMPORARY STRUCTURES

G-6.01 GENERAL
All false work, scaffolding, ladders, hoistways, braces, pumping plants, shields, trestles, roadways, sheeting, centering forms, barricades, drains, flumes, and the like, any of which may be needed in the construction of any part of the work and which are not herein described or specified in detail, must be furnished, maintained and removed by the Contractor, and he shall be responsible for the safety and efficiency of such works and for any damages that may result from their failure or from their improper construction, maintenance, or operation.

G-6.02 PUBLIC ACCESS
At all points in the work where public access to any building, house, place of business, public road, or sidewalk would be obstructed by any action of the Contractor in executing the work required by this Contract, the Contractor shall provide such temporary structure, bridges or roadway as may be necessary to maintain public access at all times. At least one lane for vehicular traffic shall be maintained in streets in which the Contractor is working. Street closure permits are required from the Department of Public Works.

The Contractor shall provide suitable temporary bridges, as directed by the Engineer, at street intersections when necessary for the maintenance of vehicular and pedestrian traffic.

Prior to temporarily cutting of access to driveways and garages, the Contractor shall give twelve (12) hours notice to affected property owners. Interruptions to use of private driveways shall be kept to a minimum.

G-6.03 CONTRACTOR'S FIELD OFFICE
The Contractor shall erect, furnish and maintain a field office with a telephone at the site during the entire period of construction. He or an authorized agent shall be present at this office at all times while his work is in progress. Readily accessible copies of both the Contract Documents and the latest approved working drawings shall be kept at this field office.

G-6.04 TEMPORARY FENCE
If, during the course of the work, it is necessary to remove or disturb any fence or part thereof, the Contractor shall, at his own expense, if so ordered by the Engineer, provide a suitable temporary fence which shall be maintained until the permanent fence is replaced. The Engineer shall be solely responsible for the determination of the necessity for providing a temporary fence and the type of temporary fence to be used.

G-6.05 RESPONSIBILITY FOR TEMPORARY STRUCTURES
In accepting the Contract, the Contractor assumes full responsibility for the sufficiency and safety of all temporary structures or work and for any damage which may result from their failure or their improper construction, maintenance, or operation and will indemnify and save harmless the City from

all claims, suits or actions and damages or costs of every description arising by reason of failure to comply with the above provisions.

SECTION 7
TEMPORARY SERVICES

G-7.01 WATER
The Contractor shall provide the necessary water supply at his own expense. He shall, if necessary, provide and lay necessary waterlines from existing mains to the place of using, shall secure all necessary permits and pay for all taps to water mains or hydrants and for all water used at the established rates.

G-7.02 LIGHT AND POWER
The Contractor shall provide, at his own expense, temporary lighting and power facilities required for the proper prosecution and inspection of the work. If, in the opinion of the Engineer, these facilities are inadequate, the Contractor will not be permitted to proceed with any portion of the work affected thereby.

G-7.03 SANITARY REGULATIONS
The Contractor shall prohibit and prevent the committing of nuisances on the site of the work or on adjoining property and shall discharge any employee who violates this rule.

Ample washrooms and toilet facilities and a drinking water supply shall be furnished and maintained in strict conformity with the law by the Contractor for use by his employees.

G-7.04 ACCIDENT PREVENTION
Precautions shall be exercised at all times for the protection of persons and property. The safety provisions of applicable laws, building and construction codes shall be observed. The Contractor shall comply with the U. S. Department of Labor Safety and Health Regulations for construction promulgated under the Occupational Safety and Health Act of 1970 (PL 91-596), and under Section 107 of the Contract Work. Hours and Safety Standards Act (PL 91-54), except where state and local safety standards exceed the federal requirements and except where state safety standards have been approved by the Secretary of Labor in accordance with provisions of the Occupational Safety and Health Act.

G-7.05 FIRST AID
The Contractor shall keep upon the site, at each location where work is in progress, a completely equipped first aid kit and shall provide ready access thereto at all times when men are employed on the work.

G-7.06 HEATING
The Contractor shall provide temporary heat, at his own expense, whenever required on account of work being carried on during cold weather and to prevent freezing of water pipes and other damage to the work.

SECTION 8

LINES AND GRADES

G-8.01 GENERAL
All work done under this Contract shall be constructed in accordance with the lines and grades shown on the Plans, or as given by the Engineer. The full responsibility for keeping alignment and grade shall rest upon the Contractor.

The Engineer will establish bench marks and base line controlling points. Reference remarks for lines and grades as the work progresses will be located to cause as little inconvenience to the prosecution of the work as possible. The Contractor shall so place excavation and other materials as to cause no inconvenience in the use of the use of the reference marks provided. He shall remove any obstructions placed by him contrary to this provision.

G-8.02 SURVEYS
The Contractor shall furnish and maintain, at his own expense, stakes and other such materials, and give such assistance, including qualified helpers, as may be required by the Engineer for setting reference marks. The Contractor shall check such reference marks by such means as he may deem necessary and, before using them, shall call the Engineer's attention to any inaccuracies. The Contractor shall, at his own expense, establish all working or construction lines and grades as required from the reference marks set by the Engineer, and shall be solely responsible for the accuracy thereof. He shall, however, be subject to the check and review of the Engineer.

The Contractor shall keep the Engineer informed a reasonable time in advance as to his need for line and grade reference marks, in order that they may be furnished and all necessary measurements made for record and payment with the minimum of inconvenience to the Engineer or of delay to the Contractor.

It is the intention not to delay the work for the establishment of reference marks but, when necessary, working operations shall be suspended for such reasonable time as the Engineer may require for this purpose.

G-8.03 SAFEGUARDING MARKS
The Contractor shall safeguard all points, stakes, grade marks, monuments and bench marks made or established on the work, bear the cost of reestablishing them if disturbed, and bear the entire expense of rectifying work improperly installed due to not maintaining or protecting or to removing without authorization such established points, stakes and marks.

The Contractor shall safeguard all existing and known property corners, monuments and marks adjacent to but not related to the work and, if required, shall bear the cost of reestablishing them if disturbed or destroyed.

G-8.04 DATUM PLANE
All elevations indicated or specified refer to the Mean Sea Level Datum of the U.S.C. & G.S. (N.O.S.) which is 0.80 feet above the Mean Low Water Datum of the U. S. Army

Corps of Engineers.

SECTION 9
ADJACENT STRUCTURES AND LANDSCAPING

G-9.01 RESPONSIBILITY
The responsibility for removal, replacement, relocation, repair, rebuilding or protection of all public utility installations, including poles, tracks, pipes, wires, conduits, house service connections, vaults, manholes, sewers, traffic control and fire alarm signal circuit installations and other appurtenances and facilities shall be in accordance with G-1.02 and G-1.03.

The Contractor shall also be entirely responsible and liable for all damage or injury as a result of his operations to all other adjacent public and private property, structures of any kind and appurtenances thereto met with during the progress of the work. The cost of protection, replacement in their original locations and conditions or payment of damages for injuries to such adjacent public and private property and structures affected by the work, whether or not shown on the Plans, and the removal, relocation, and reconstruction of such items called for on the Plans or specified shall be included in the various Contract Items and no separate payment will be made therefor. Where such public and private property, structures of any kind and appurtenances thereto are not shown on the Plans and when, in the opinion of the Engineer, removal or relocation and reconstruction is necessary to avoid interference with the work, payment therefor will be made as provided for extra work in Article 7.02 of the Agreement.

G-9.02 PROTECTION OF TREES
All trees and shrubs shall be adequately protected by the Contractor with boxes or otherwise and, within the City of Tampa, in accordance with ordinances governing the protection of trees. No excavated materials shall be placed so as to injure such trees or shrubs. Trees or shrubs destroyed by negligence of the Contractor or his employees shall be replaced by him with new stock of similar size and age, at the proper season, and at the sole expense of the Contractor.

Beneath trees or other surface structures, where possible, pipelines may be built in short tunnels, backfilled with excavated materials, except as otherwise specified, or the trees or structures carefully supported and protected from damage.

The City may order the Contractor, for the convenience of the City, to remove trees along the line of trench excavation. If so ordered, the City will obtain any permits required for removal of trees. Such tree removal ordered shall be paid for under the appropriate Contract Items.

G-9.03 LAWN AREAS
Lawn areas shall be left in as good condition as before the starting of the work. Where sod is to be removed, it shall be carefully removed and later replaced, or the area where sod has been removed shall be restored with new sod in the manner described in the Technical Specifications section.

G-9.04 RESTORATION OF FENCES
Any fence, or part thereof, that is damaged or removed during the course of the work shall be replaced or repaired by the Contractor and shall be left in as good a condition as before the starting of the work. The manner in which the fence is repaired or replaced and the materials used in such work shall be subject to the approval of the Engineer. The cost of all labor, materials, equipment, and work for the replacement or repair of any fence shall be deemed included in the appropriate Contract Item or Items, or if no specific Item is provided therefor, as part of the overhead cost of the work, and no additional payment will be made therefor.

SECTION 10
PROTECTION OF WORK AND PUBLIC

G-10.01 TRAFFIC REGULATIONS
The Contractor shall arrange his work to comply with Article G-6.02. The work shall be done with the least possible inconvenience to the public and to that end the work may be confined by the Engineer to one block at a time.

G-10.02 BARRIERS AND LIGHTS
During the prosecution of the work, the Contractor shall put up and maintain at all times such barriers, and lights, as will effectually prevent accidents. The Contractor shall provide suitable barricades, red lights, "danger" or "caution" or "street closed" signs and watchmen at all places where the work causes obstructions to the normal traffic or constitutes in any way a hazard to the public. Such barriers and signs shall be constructed to State of Florida Department of Transportation standards and placed as recommended by the Traffic Division of the City's Department of Public Works.

No open fires will be permitted.

G-10.03 SMOKE PREVENTIONS
The Contractor shall use hard coal, coke, oil or gas as fuel for equipment generating steam. A strict compliance with ordinances regulating the production and emission of smoke will be required.

G-10.04 NOISE
The Contractor shall eliminate noise to as great an extent as practicable at all times. Air compressing plants shall be equipped with silencers and the exhaust of all gasoline motors or other power equipment shall be provided with mufflers. In the vicinity of hospitals and schools, special care shall be used to avoid noise or other nuisances. The Contractor shall strictly observe all local regulations and ordinances covering noise control.

Except in the event of an emergency, no work shall be done between the hours of 7:00 p.m. and 7:00 a.m., or on Sundays. If the proper and efficient prosecution of the work requires operations during the night, the written permission of the Engineer shall be obtained before starting such items of the work.

G-10.05 ACCESS TO PUBLIC SERVICES
Neither the materials excavated nor the materials or plant used in the construction of the work shall be so placed as to prevent free access to all fire hydrants, valves or manholes.

G-10.06 DUST PREVENTION
The Contractor shall prevent dust nuisance from his operations or from traffic by keeping the streets sprinkled with water at all times.

G-10.07 PRIVATE PROPERTY
The Contractor shall so conduct the work that no equipment, material, or debris will be placed or allowed to fall upon private property in the vicinity of the work unless he shall have obtained the owner's written consent thereto and shall have shown this consent to the Engineer.

SECTION 11
SLEEVES AND INSERTS

G-11.01 COORDINATION
When the Contract requires the placing of conduits, saddles, boxes, cabinets, sleeves, inserts, foundation bolts, anchors, and other like work in floors, roofs, or walls of buildings and structures, they shall be promptly installed in conformity with the construction program. The Contractor who erects the floors, roofs, and walls shall facilitate such work by fully cooperating with the Contractors responsible for installing such appurtenances. The Contractor responsible for installing such appurtenances shall arrange the work in strict conformity with the construction schedule and avoid interference with the work of other contractors.

G-11.02 OPENINGS TO BE PROVIDED
In the event timely delivery of sleeves and other materials cannot be made and to avoid delay, the affected Contractor may arrange to have boxes or other forms set at the locations where the appurtenances are to pass through or into the floors, roofs, walls, or other work. Upon the subsequent installation of these appurtenances, the Contractor erecting the structure shall fill around them with materials as required by the Contract. The necessary expenditures incurred for the boxing out and filling in shall be borne by the Contractor or Contractors required to furnish the sleeves and inserts. Formed openings and later installation of sleeves will not be permitted at locations subject to hydrostatic pressure.

SECTION 12
CUTTING AND PATCHING

G-12.01 GENERAL
The Contractor shall do all cutting, fitting, or patching of his portion of the work that may be required to make the several parts thereof join and coordinate in a manner satisfactory to the Engineer and in accordance with the Plans and Specifications. The work must be done by competent workmen skilled in the trade required by the restoration.

SECTION 13
CLEANING

G-13.01 DURING CONSTRUCTION
During construction of the work, the Contractor shall, at all times, keep the site of the work and adjacent premises as free from material, debris, and rubbish as is practicable and shall remove the same from any portion of the site if, in the opinion of the Engineer, such material, debris, or rubbish constitutes a nuisance or is objectionable.

The Contractor shall remove from the site all of his surplus materials and temporary structures when no further need therefor develops.

G-13.02 FINAL CLEANING
At the conclusion of the work, all erection plant, tools, temporary structures and materials belonging to the Contractor shall be promptly taken away, and he shall remove and promptly dispose of all water, dirt, rubbish or any other foreign substances.

The Contractor shall thoroughly clean all equipment and materials installed by him and shall deliver such materials and equipment undamaged in a bright, clean, polished, and new appearing condition.

SECTION 14
MISCELLANEOUS

G-14.01 PROTECTION AGAINST SILTATION AND BANK EROSION
The Contractor shall arrange his operations to minimize siltation and bank erosion on construction sites and on existing or proposed watercourses and drainage ditches.

G-14.02 EXISTING FACILITIES
The work shall be so conducted to maintain existing facilities in operation insofar as is possible. Work shall be scheduled to minimize bypassing during construction. Requirements and schedules of operations for maintaining existing facilities in service during construction shall be as described in the Special Provisions.

G-14.03 USE OF CHEMICALS
All chemicals used during project construction or furnished for project operation, whether herbicide, pesticide, disinfectant, polymer, reactant or of other classification, must show approval of either EPA or USDA. Use of all such chemicals and disposal of residues shall be in strict conformance with instructions.

* * * * * * *

City of Tampa – DMI Sub-(Contractors/Consultants/Suppliers) Payments

(FORM MBD-30)

[ ] Partial [ ] Final

Contract No.: _____ WO#,(if any):_____ Contract Name:_____

Contractor Name:_____ Address:_____

Federal ID:_____ Phone:_____ Fax:_____ Email:_____

GC Pay Period:_____ Payment Request/Invoice Number:_____ City Department:_____

Total Amount Requested for pay period: $_____ Total Contract Amount(including change orders):$_____

-Type of Ownership - (F=Female M=Male), BF BM = African Am., HF HM = Hispanic Am., AF AM = Asian Am., NF NM = Native Am., CF CM = Caucasian S = SLBE

Type Trade/Work Activity []Sub []Supplier Federal ID	Company Name Address Phone & Fax	Total Sub Contract Or PO Amount	Amount Paid To Date Amount Pending Previously Reported	Amount To Be Paid For This Period Sub Pay Period Ending Date
			$	$
			$	$
			$	$
			$	$
			$	$
			$	$

(Modifying This Form or Failure to Complete and Sign May Result in Non-Compliance)

Certification: I hereby certify that the above information is a true and accurate account of payments to sub – contractors/consultants on this contract.

Signed:_____ Name/Title:_____ Date:_____

 Note: Detailed Instructions for completing this form are on the next page

Page 2 of 2 – DMI Payment

Instructions for completing The DMI Sub-(Contractors/Consultants/ Suppliers) Payment Form

(Form MBD-30)

This form must be submitted with all invoicing or payment requests where there has been subcontracting rendered for the pay period. If applicable, after payment has been made to the subcontractor, "Waiver and Release of Lien upon Progress Payment", "Affidavit of Contractor in Connection with Final Payment", or an affidavit of payment must be submitted with the amount paid for the pay period. The following will detail what data is required for this form. The instructions that follow correspond to the headings on the form required to be completed. **(Modifying or omitted information from this form my result in non-compliance).**

- **Contract No.** This is the number assigned by the City of Tampa for the bid or proposal.
- **W.O.#** If the report covers a work order number (W.O.#) for the contract, please indicate it in that space.
- **Contract Name.** This is the name of the contract assigned by the City of Tampa for the bid or proposal.
- **Contractor Name.** The name of your business.
- **Address.** The physical address of your business.
- **Federal ID.** A number assigned to a business for tax reporting purposes.
- **Phone.** Telephone number to contact business.
- **Fax.** Fax number for business.
- **Email.** Provide email address for electronic correspondence.
- **Pay Period.** Provide start and finish dates for pay period. (e.g. 05/01/13 – 05/31/13)
- **Payment Request/Invoice Number.** Provide sequence number for payment requests. (ex. Payment one, write 1 in space, payment three, write 3 in space provided.)
- **City Department**. The City of Tampa department to which the contract pertains.
- **Total Amount Requested for pay period.** Provide all dollars you are expecting to receive for the pay period.
- **Total Contract Amount (including change orders).** Provide expected total contract amount. This includes any change orders that may increase or decrease the original contract amount.
- **Signed/Name/Title/Date**. This is your certification that the information provided on the form is accurate.
- **See attached documents.** Check if you have provided any additional documentation relating to the payment data. Located at the bottom middle of the form.
- **Partial Payment.** Check if the payment period is a partial payment, not a final payment. Located at the top right of the form.
- **Final Payment.** Check of this period is the final payment period. Located at the top right of the form.

The following instructions are for information of any and all subcontractors used for the pay period.

- **(Type) of Ownership.** Indicate the Ethnicity and Gender of the owner of the subcontracting business or SLBE.
- **Trade/Work Activity.** Indicate the trade, service, or material provided by the subcontractor.
- **SubContractor/SubConsultant/Supplier.** Please indicate status of firm on this contract.
- **Federal ID.** A number assigned to a business for tax reporting purposes. This information is critical in proper identification of the subcontractor.
- **Company Name, Address, Phone & Fax**. Provide company information for verification of payments.
- **Total Subcontract Amount.** Provide total amount of subcontract for subcontractor including change orders.
- **Amount Paid To Date.** Indicate all dollars paid to date for the subcontractor.
- **Amount Pending, Previously Reported.** Indicate any amount previously reported that payments are pending.
- **Amount To Be Paid for this Period.** Provide dollar amount of dollars requested for the pay period.
- **Sub Pay Period Ending Date.** Provide date for which subcontractor invoiced performed work.

Forms must be signed and dated or will be considered incomplete. The company authorized representative must sign and certify the information is true and accurate. Failure to sign this document or return the document unsigned can be cause for determining a company is in non-compliance of Ordinance 2008-89.

If any additional information is required or you have any questions, you may call the Minority Business Development Office at (813) 274-5522.

SIGN EXAMPLE ONLY GRAPHIC TO BE DEVELOPED BY CONTRACTOR

scale: 3" 3"

Sign Information

Building a Better Tampa

Downtown Riverwalk

Creates a waterfront pedestrian walkway connecting the south edge of the CapTrust building with MacDill Park.

$1.5 Million investment
Scheduled for completion in October 2012

Orion Marine
Construction, Inc.

Colors

Blue: Sherwin Williams Naval SW6244
Green: Sherwin Williams Center Stage SW6920
White: Sherwin Williams Pure White SW7005

Font

Franklin Gothic

K:\CA\edr\dpw project sign 4-28-04.dwg, 08/22/2005 12:32:38 PM, pw1m

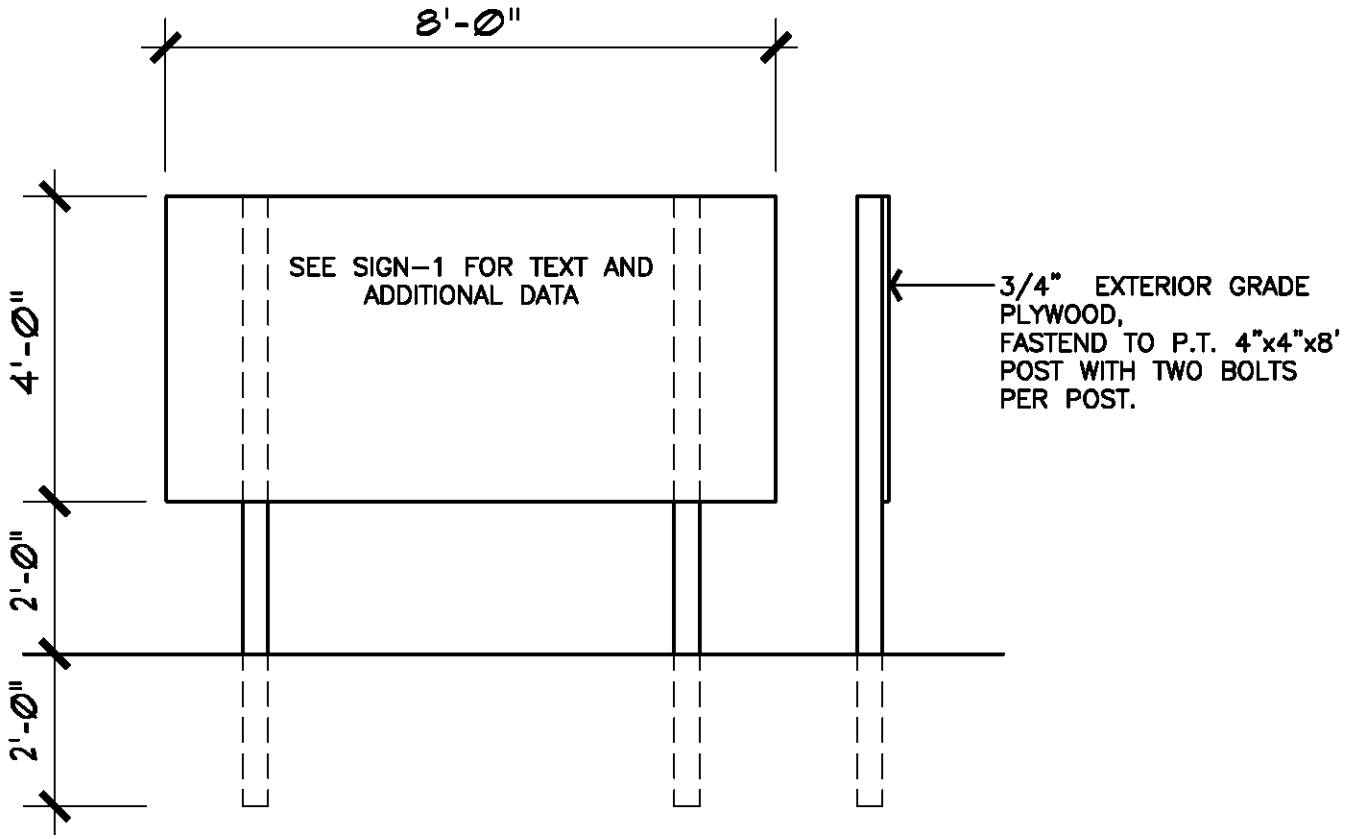

CITY OF TAMPA–PROJECT SIGN
REVISED 4/28/04

SIGN – 2

SCHEDULE A - SPECIFIC PROVISIONS FOR WATER

S-1.01 GENERAL

The Specific Provisions are intended as modifications or supplements to Instructions to Bidders, General Provisions and Agreement.

This is a one year contract for the City of Tampa's Water Department for the construction of water mains. The work will be located in many portions of the City's service area and will be given out to the Contractor from time to time by work order. A separate set of plans will be provided for each work order.

The City of Tampa reserves the right to require the Contractor to change his "Contractor Superintendent" at any time.

S-2.01 DEFINITIONS

Add or amend the Definitions in Article 1.02 of the Agreement to these documents as follows:

"Department"
Add the following: “Whenever the word "Department" is used in the Contract Documents, it shall mean the "City of Tampa Water Department".

“Owner” as it is referred to in the Technical Specifications shall mean the City of Tampa Water Department.

“Red-line Drawing” refers to drawing maintained by the Contractor depicting changes (as constructed) from original plans.

S-3.01 APPLICABLE CODES OR STANDARDS

When words that have a well known technical or trade meaning are used to describe work, materials or equipment, such words shall be interpreted in accordance with such meaning.

When reference is made to codes or standards of organizations as outlined in Section G-4.03 of the General Provisions, it shall mean the latest revision thereof. However, no provision of any reference standard specification, manual or code (whether or not specifically incorporated by reference in the Contract Documents) shall change the duties and responsibilities of the City, Engineer or Contractor, or any of their agents or employees from those set forth in the Contract Documents.

S-4.01 PERIOD OF CONTRACT

Unless prior notice to the contrary is given to the Contractor by the Department, this contract shall be in full force and effect starting on the date of the contract and continuing for 365 consecutive calendar days. However, this contract can be renewed, upon the same prices, terms, and conditions, for 2 additional 1-year periods, if agreeable with both parties and if funds are available.

To renew the contract for an additional 1 year period the Contractor must notify the City, in writing that he desires renewal of the contract and present a new Public Construction Bond to cover the new period. The letter must be received by the City at least 120 days prior to contract expiration. The City shall respond to the Contractor's renewal request at least 90 days prior to the contract expiration.

S-4.02 BASIS OF AWARD/CONTRACT PRICE

The Contract will be awarded, if at all, to the lowest responsible bidder. The City reserves the right to reject any and all bids where in the opinion of the City, the bid is excessively high or otherwise would not be in the City's best interest.

The City reserves the right to assign quantities of work to the contractor based on performance criteria, including but not necessarily limited to, the ability to meet acceptable schedules, the ability to satisfactorily complete leakage/pressure tests, other construction testing and timeliness of satisfactory restoration.

Construction projects (issued through work orders) to be released through the Contract will primarily be from one of two categories – Major Projects or Minor Projects. Major Projects will typically originate from the Department's Engineering Division, and will include significant amounts construction - such as water distribution or transmission main CIPs, or water main relocations for state agency road construction projects, or special projects. Minor Projects will typically originate from the Department's Distribution Division and be smaller, isolated construction projects not associated with significant pipeline construction projects - such as individual meter service installations, single FH installations/removals, restoration jobs, valve installations and/or replacements, etc. Minor Projects will require expedited construction, as outlined in S-4.03 and S-4.04, and in the Minor Projects Contract Pay Items section, and occur on an as-needed basis throughout the City's service area.

Separate Contract Pay Item Descriptions are provided herein describing requirements applicable to Minor Projects work and payment, and separate pay items included in the Proposal for Minor Projects construction. Compensation for Minor Projects construction will be through the appropriate Minor Projects pay items, and requirements applicable to those pay items will be as specified in the Minor Projects Contract Pay Item Descriptions. If requirements therein conflict with or differ from requirements specified elsewhere in the Contract, the Minor Projects Contract Pay Items Descriptions

take precedence for Minor Projects work orders completed.

Work orders shall be issued in writing to the Contractor for each project requested by the City. All such notices shall specify the date of issuance and cost estimate. Within seven (7) calendar days of receiving a Major Projects work order from the City, the Contractor shall provide the City with a work schedule for completing that work order and a cost estimate for the project. Because Minor Project work orders must be completed from 1 day to 2 weeks after being issued to the Contractor (dependent on the type of Minor Projects work required), a work schedule for completing that work order and a cost estimate for the project will not be required.

The work schedule shall contain the detail and duration of all required work tasks including delivery of as-built drawing. The City shall review the work schedule and return it for correction, or review the work schedule and acknowledge its receipt.

While the City will generate its own cost estimate, the Contractor shall review the plans and produce a cost estimate for Major Projects. If items are listed or shown that are not in the Contract, the Contractor shall provide costs to furnish and install he non-contract items.

For Major Projects, once the City has acknowledged receipt of the work schedule and cost estimate, it will become the official schedule for that work order and the City will issue the Notice to Proceed for that work order. Upon receipt of a Notice to Proceed from the City, the Contractor shall mobilize to the site and begin work within thirty (30) calendar days. For any work order with a total estimated value equal to or less than $50,000 and for which the contractor does not mobilize to the site and begin work within thirty (30) calendar days of the start date delineated in the Notice to Proceed, the Department will assess liquidated damages of $580.00 per day for each calendar day that their actual mobilization and start work date exceeds the aforementioned thirty (30) calendar day window.

Each work order shall be constructed within the time frame outlined in the official work schedule for that work order. In the event that the City determines that work on a particular work order is not progressing in a satisfactory manner and at a reasonable speed, it may, at its discretion, authorize the completion of the work by others. The Contractor will only be compensated for the work completed and the City is not obligated to the Contractor for uncompleted work remaining on the Work Order or contract. Failure to meet contract requirements may result in the work being performed by others, no further work orders being issued to the Contractor, termination of the Contract and/or filing of claim by the City against the Public Construction Bond.

S-4.03 TIME PROVISIONS FOR MAJOR PROJECTS

Within 5 days after Notice to Proceed, but before Contractor starts work at the site, a conference attended by Contractor, Engineer and other as appropriate personnel will be held to discuss: (1) the schedules referred to in the paragraph Preliminary Schedules herein; (2) procedures for handling shop drawings and

other submittals; (3) procedures for processing Application for Payment; and (4) to establish a working understanding among the parties to the work.

S-4.04 TIME PROVISIONS FOR MINOR PROJECTS

Work orders released for Minor Projects construction often have expedited service level requirements, i.e., each must be completed within a specified time period. Maximum completion times allowed are as follows:

New Meter Installations	2 Weeks
Worksites (restoration, State roads)	1 Day
Worksites (restoration, Streets)	7 Days
Worksites (restoration, Driveways)	8 Days
Worksites (restoration, Sidewalks)	10 Days
Hydrant Replacements	10 Days

S-4.05 EXTRA WORK

Compensation for Extra Work shall be in accordance with Tampa Agreement Article 7.02 EXTRA WORK. If City and Contractor cannot agree on acceptable unit rates or lump sum price for required Extra Work, and compensation must instead be provided per sub-paragraph (c) in Article 7.02, labor rates shall be taken from RS Means, and equipment rates shall be taken from the current Rental Rate Blue Book for Construction Equipment.

S-4.06 AVAILABLE RESOURCES

The Contractor shall have sufficient resources, including but not necessarily limited to crews, subcontractors, equipment and materials, to perform work on a minimum of six (6) separate Major Projects and three (3) separate Minor Projects work orders concurrently, while allocating a minimum of one crew per work order.

Each bidder will be required to present satisfactory evidence that he has the necessary competency, capability, credit, integrity, perseverance and tenacity to complete this Contract, to include providing information which delineates the number and type of each crew (pipe laying, testing, sodding, paving, etc.) to be allocated to this contract, the number of workers assigned to the crew and the company by whom they are employed. The inability to meet construction schedule deadlines for work order assignments shall be grounds for termination of the Contract.

S-5.01 LICENSES AND PERMITS

If not previously acquired by the Department, the Contractor must obtain at his own expense, all

construction-related permits, licenses, or other legal authorization necessary for the execution of each project or work order issued by the Department. Where applicable (project/work order results in one acre or more of disturbed earth) the Contractor shall file a Notice of Intent (NOI) to access the generic NPDES permit administered by the Florida Department of Environmental Protection (FDEP). All document preparation, monitoring, reporting and other compliance with the NOI requirements shall be the responsibility of the Contractor and no separate payment shall be made. The Contractor must comply with all regulations, building and construction codes as may be required by law. Copies of all permits must be kept at the job site during construction. The Contractor shall comply with all the terms and requirements of the permits and will be held liable for the violation of any and all such permits.

The City will obtain Hillsborough County and FDOT permits and notify the City right-of-way permit office that a work order has been issued. The contractor shall obtain a City of Tampa right-of-way permit. The Contractor shall provide traffic control plans to all right-of-way owners as required.

S-6.01 LIQUIDATED DAMAGES

Due to the nature of the work, liquidated damages may be assessed. The Contractor will be given a reasonable length of time, as defined in the notice to proceed for each work order, to complete each separate work order, and he is expected to complete the work expeditiously, including proper clean-up, and as-built drawings within that period of time. If a work order is not completed within the time allotted in the work order's official schedule and on that work order's Notice to Proceed, then the Department may deduct from the Contractor's payment for that work order, or from the payment of other work orders, $580.00 per day for each calendar day that the work exceeds the allotted completion time. Also, and as noted in S-4.02, for all work orders with an estimated value of $50,000 or less, liquidated damages of $580.00 per day will be assessed for each calendar day for which the Contractor fails to mobilize to the site and begin construction within thirty (30) calendar days of the start date delineated in the Notice to Proceed.

A work order that is substantially complete shall meet one of the following criteria:

1) All mains and services including transfers are installed, tested and disinfected, such that water can be provided to consumers and the roadway has been restored in such fashion that it is open to traffic or;
2) Mains installed without services are installed, tested and disinfected, such that the main can be put into service and the roadway has been restored in such fashion that it is open to traffic or;
3) All mains, services and meters are installed, tested and disinfected, such that water can be provided to consumers and the roadway has been restored in such fashion that it is open to traffic.

The above definition shall govern providing all applicable permits, codes and standards have been complied with. Complete restoration is not necessary for a project to be substantially complete, however, final payment shall not be processed prior to final walk through with, and subsequent acceptance by the Engineer. Final payment will not be processed until as-built drawings are obtained and approved.

S-7.01 WORK DIRECTIVE CHANGE

A Work Directive Change is a written directive to the Contractor, issued on or after the date of the execution of the Agreement, and signed by the Engineer on behalf of the City, ordering an addition, deletion or revision in the work, or responding to an emergency. A Work Directive Change will not change the contract price or the time for completion, but is evidence that the parties expect that the change directed or documented by a Work Directive Change will be incorporated in a subsequently issued Change Order following negotiations by the parties as to its effect, if any, on the contract price or the time of completion.

Without invalidating the Agreement, additions, deletions or revisions in the work may, at any time or from time to time, be authorized by a Change Order or a Work Directive Change. Upon receipt of any such document, the Contractor shall promptly proceed with the work involved.

S-8.01 ORDER AND TIME OF WORK

The work shall begin at such points as the Department shall designate and shall be prosecuted in the order it directs. This applies to both locations and items of construction. Where any of the work requires an interruption of service or plant operation, permission must be received from the Department and the work performed at times designated by it. The Contractor shall not be allowed to file claims for extra compensation of work prescribed by the Department. The Contractor shall make whatever arrangements are necessary and provide temporary lines and connections where designated by the Department.

S-9.01 DEFECTIVE MATERIALS

All pipe, fittings, valves, etc., except as defined herein, shall be furnished by the Contractor, and it shall be the responsibility of the Contractor to examine each item to ensure that it is new, unused, and in first class condition. Should a defect be discovered after the item has been placed in the trench, the replacement will be at the Contractor's expense. It will further be required of the Contractor that materials be hauled in a safe and careful manner to avoid possible damage. Should any damage be done, the Contractor shall be fully responsible. Materials may be stored along the installation routes in a manner acceptable to the Department. At no time shall materials for more than one weeks work be stacked in the right-of-way. Materials shall not remain in the right-of-way during week-ends. Contractor shall leave sight clean with no trash when workers are not present.

Any materials that are furnished by the Department to the Contractor shall be obtained at the Department's storage yard. The Contractor shall furnish all labor and equipment necessary to load, transport, and unload the materials in the manner directed by the Department.

Materials accepted by the Contractor must be signed for by his authorized representative. After acceptance, the Contractor will be held accountable and responsible for the materials. No materials will be issued or

returned without a written directive from the Department.

S-10.01 WORK PERFORMED ON SATURDAYS, SUNDAYS, LEGAL HOLIDAYS, OR AFTER REGULAR WORKING HOURS

With the exception of certain Minor Projects work orders issued, the work shall normally be discontinued on Saturdays, Sundays, all City and State designated holidays, and after regular working hours (7:30 A.M. to 4:00 P.M., Monday through Friday). Due to the work schedules of the City forces who may be involved, all work shall be conducted during normal work hours and days (Monday through Friday) and prior authorization must be requested by the Contractor for any work he feels is necessary to be accomplished on Saturdays, Sundays, or Holidays. Any overtime for Contractor convenience for weekend or holiday work requiring City forces will require reimbursement to the City by the Contractor for the cost of City Inspection time required. The Contractor must request permission in writing at least 2 working days prior in order to perform work beyond regular work hours or on weekends or holidays as stated above. Written approval must be obtained from the Engineer.

When nighttime work has been approved or directed by the Engineer, it shall be the responsibility of the Contractor to provide adequate artificial lighting – additional compensation will be provided to the Contractor for said lighting, based on equipment rates in the current "Rental Rate Blue Book for Construction Equipment". The Contractor shall be responsible for the safety of all employees during night work.

Because nighttime work results in lost productivity of that crew (or crews) the following day, whenever nighttime work approved and directed by the Engineer requires less than 5 nights to complete, the Contractor shall be allowed supplemental compensation of one (1) Crew Day per crew performing the nighttime work - supplemental to the standard unit rate compensation provided for construction completed through the Contract. This allowance does not apply to construction completed through Minor Projects work orders – per the Minor Projects Contract Pay Items Descriptions, Contractor offered unit rates in the Proposal for Minor Projects Pay Items should include for potential nighttime or weekend work that might be necessary to complete those work orders.

Jack and bore of FDOT maintained roadways must be started and completed during regular working hours of the FDOT's employees. Consequently, such operations must be initiated and completed in a continuous operation on Monday through Thursday when an FDOT inspector can be present.

S-11.01 COMMENCEMENT OF WORK

Upon receipt of the "Notice to Proceed" as indicated in Article 4.01 of the Agreement, the Contractor would then be immediately authorized to begin receiving work orders. The Contractor will be issued a separate "Notice to Proceed" for each particular work order given to him; these "Notices to Proceed" shall stipulate the number of calendar days within which the Contractor must both commence and complete the

work for the particular work order. The time for final completion shall be based on the approved work schedule for that particular work order.

No project will be allowed to commence until Contractor has an approved project schedule, cost estimate and maintenance of traffic permit.

S-12.01 PARTIAL PAYMENTS

The City shall have the option of making monthly partial payments on those work orders that exceed $100,000.00. Payment of these partial payment requests shall be for the approved and accepted amount of work that the Contractor has accomplished in the previous month for that particular work order. The approved amount of work is defined as that amount of work associated with an active work order project which, in the opinion of the Engineer, is progressing at a satisfactory rate of completion. Satisfactory rate of completion is interpreted to mean that once a work order project is started by the Contractor, the job must be actively pursued to include site preparation, utility and agency coordination, installation of all pipe and appurtenances, restoration, clean up, all necessary testing, disinfecting, and final acceptance. Final acceptance shall include as-built drawings and necessary paperwork to close out the work order.

S-13.01 PUBLIC CONSTRUCTION BOND

The Bidder who is awarded the Contract will be required to furnish a Public Construction Bond upon the form provided herein, in an amount at least equal to $7,000,000.00, such Bonds to be issued and executed by (a) surety company(ies) acceptable to the City of Tampa and licensed to underwrite contracts in the State of Florida. Surety companies shall have a rating of not less than B+ (or better): Class VI (or higher) as evaluated in the most recently circulated BEST'S KEY RATING GUIDE PROPERTY-LIABILITY.

When the cumulative value of the work orders issued exceeds the value of the performance bond held by the City of Tampa, the Contractor shall promptly provide additional performance bond to cover 100% of the cumulative value of the work orders issued under this Contract. Any additional performance bonds required shall be submitted to the Engineer within five business days of receipt of the written work order, and shall reimbursed to the Contractor from the Contingency Allowance on the Contractor's next pay application.

S-14.01 LAYOUT DATA

The City will provide horizontal and vertical control or reference points for each project. From these control or reference points, the Contractor will set construction layout stakes and/or offsets necessary to complete the required work. All work shall be subject to field changes as directed by the Engineer. Compensation for construction layout will be included in the price of the various respective pay items for pipeline installation except as noted below. Prior to commencement of construction, the Contractor shall obtain the Department's acceptance of the layout. It shall be the Contractor's responsibility to protect said

stakes and/or offsets until, in the opinion of the Department, they have served their designated purpose. If re-staking and/or re-offsetting are required, the cost of re-staking and/or re-offsetting will be at the Contractor's expense. All survey and layout costs will be included in the appropriate other unit prices and for which no separate payment will be made, except as noted in Section C9.97 Supplemental Survey Layout. The City of Tampa will permit a supplementary survey layout for all pipelines equal to or greater than 16” in diameter and equal to or greater than 1,000 feet in length. The survey will be performed by Florida Registered Land Surveyor. A copy of the signed and sealed survey layout will be provided to the Engineer as certification of the completion of the layout. Payment by the City for this work will be based on footage laid out, as measured along the centerline of the proposed 16” and larger diameter pipe.

S-15.01 CONFLICTS WITH PROPOSED WORK

It shall be the Contractor's responsibility to alert the Engineer to any conflicts or potential conflicts with the proposed work the day they are discovered, including but not limited to conflicts with existing utilities. Failure of the Contractor to review the job site and alert the Engineer to any conflicts shall relieve the Department from compensating the Contractor for any cost arising from any remedial action necessary to resolve conflict with the proposed work.

S-15.02 EXISTING UTILITIES

Any costs incurred as a result of damage to an “incorrectly” marked existing utility structure or appurtenances (except sanitary laterals – see S-20.01) are to be resolved with the owner of the damaged utility and not the responsibility of the Water Department. “Incorrectly” marked (as defined in F.A.C. 556, the Underground Facility Damage Prevention and Safety Act) shall mean the hit location was more than 24” either side of the marking for 6” or smaller diameter pipe, or 24” outside of the marking (or double lines, if so marked) for pipes larger than 6” diameter.

S-16.01 TEMPORARY FACILITIES AND CONTROLS

A) Temporary Water Supply

In lieu of the requirements outlined in Article G-7.01 of the General Provisions, all reasonable amounts of water required by the Contractor for the construction under this Agreement will be furnished by the City from the existing water system without cost to the Contractor. The Contractor shall request temporary hydrant meters (at no charge to the Contractor) with backflow prevention devices when connecting to existing water system hydrants. A security deposit for the meter is required. The deposit will be returned when the meter is returned to the Contractor. City Crews will install the meter with backflow-preventer on the hydrant. The Contractor shall make any necessary water supply connections at his own expense at a point designated by the City. These connections shall be maintained by the Contractor, who shall furnish all pipe, valves, and such other equipment necessary or required. Temporary piping may run above ground when there is no possibility of traffic, and it can be done safely. Otherwise, it must run underground and in

such manner as to meet the approval of the City. No water shall be wasted.

At the discretion of the City, unnecessary waste of water after notification will be cause for use of water to be discontinued. After temporary lines have served their purpose, they shall be removed by the Contractor and all connections closed or plugged to the satisfaction of the City.

B) Temporary Sanitary Facilities

Necessary sanitary conveniences for the use of all employees shall be erected and maintained in a satisfactory and sanitary condition, per G-7.03. Upon completion of the work they shall be removed leaving the premises clean.

C) Temporary Traffic Control

The Contractor shall arrange his work in order to obstruct traffic as little as possible. Maintenance of traffic (MOT) shall conform to the requirements of Articles G-10.01 and 10.02 of the General Provisions and all requirements stated herein. All applicable Federal, State, Local regulations and permit conditions will be adhered to. All MOT plans require approval from the right-of-way regulatory agency.

To protect persons from injury and to avoid property damage, adequate barrier walls, barricades, construction signs, torches, flashers, and guards as required shall be placed and maintained during the progress of the construction work and until it is safe to use the construction area for its normal purposes. Whenever required, the Contractor shall provide a watchman to prevent accidents. Rules and regulations of Local, State and Federal authorities in regard to safety provisions shall be observed. In addition, the installation of all mains and appurtenances shall comply with all requirements of the Occupational Safety and Health Administration (OSHA). The safety of the public and the work crews must be considered at all times. Because of the numerous conditions that must be considered, special traffic control planning must be made for each area within the construction limits.

In the absence of other regulatory requirements, the traffic control devices, the arrangement or position of the devices and the distances of the devices must be in conformance with the policies, procedures and regulations of the regulatory authority in charge of the right-of way or Part VI of the Manual on Uniform Traffic Control Devices (MUTCD), as a minimum standard. In FDOT rights-of-way, the MUTCD, the "Standard Specifications for Road and Bridge Construction" and the "FDOT Roadway and Traffic Design Standards for Design, Construction, Maintenance and Utility Operations on the State Highway System" shall be used. The Contractor shall not use fewer control devices, or reduce the signing, barricading or coning distances, to below these Minimum Standards. The Contractor is expected to expand or improve the installation whenever the need is indicated. Traffic movement through the work site is to be observed, and maintenance of all traffic control devices is expected during the construction period.

Prior to commencing work, the Contractor shall obtain permission from the appropriate Federal, State or

local agency before construction starts and before making full or partial street closures, if such is allowed. When the appropriate agency requires plans for maintenance of traffic, the Contractor shall provide the necessary signed and sealed plans to the agency and to the Engineer. The Contractor shall be responsible for the re-routing of all traffic occasioned by the closure and will provide all necessary barricades, guards, signs, etc. If it becomes necessary to block vehicular or pedestrian access to private property, the Contractor shall prior to proceeding with the excavation, make arrangements acceptable with the owners or occupants and the Engineer.

S-17.01 MAINTENANCE AND RESTORATION OF JOB SITE

The Contractor shall conduct his operations in such a manner that will result in a minimum of inconvenience to occupants of adjacent homes and business establishments and shall provide temporary access as directed or as conditions in any particular location may require as determined by the Engineer. All restoration must be performed to an equal or better condition than that which existed prior to construction.

Good housekeeping on this project is extremely important and the Contractor will be responsible for keeping the construction site neat and clean, with debris being removed daily as the work progresses or as otherwise directed by the Engineer. Good housekeeping at the job site shall include: removing all tools and temporary structures, dirt, rubbish, etc.; hauling all excess dirt, rock, etc. from excavations to a dump provided by the Contractor; and all clean-up shall be accomplished to the satisfaction of the Engineer. Immediately after construction is completed in an area or part thereof (including restoration), barricades, construction equipment and surplus and discarded materials shall be removed by the Contractor.

In the event that the timely clean-up and restoration of the job site is not accomplished to the satisfaction of the Engineer, the Engineer may make arrangements to effect the necessary clean-up by others. The Contractor shall be back-charged for these costs. If such action becomes necessary on the part of and in the opinion of the Engineer, the Department shall not be responsible for the inadvertent removal from the work site of materials which the Contractor would not normally have disposed of had he affected the required clean-up.

At the completion of each workday, the Contractor shall fill all open trenches and pits. Trenches and pits may remain open only if the Contractor has obtained permission from the appropriate permitting agency and all protection and warning devices are in place in working order.

The Contractor shall replace all open cut road pavements with a temporary compacted surface capable of supporting sustained vehicular loads as soon as possible once the trench or pit has been filled and compacted in 6-inch lifts. The temporary surface shall be maintained by the Contractor at the elevation of the adjacent road surfaces.

The Contractor is responsible for the security of all tools, materials and equipment required for this project and must make all arrangements for safeguards he may deem necessary. The City will assume no liability

for any such security or losses resulting from lack of security.

S-18.01 CONTRACTOR'S SCHEDULE

The Contractor shall submit a weekly schedule to the Construction Engineer. The weekly schedule shall indicate his proposed water work plan for all outstanding projects in the forthcoming week. Such shall be delivered to the Construction Services office at 26th Avenue by noon of each Friday preceding the work plan week unless other arrangements have been made for this submittal.

S-19.01 USE OF EXPLOSIVES

Explosives shall not be used on the work except when authorized by the Engineer. If authorized, the use of explosives shall conform to laws or ordinances which may pertain to the use of same, and the utmost care will be exercised by the Contractor so as not to endanger life or property. The Contractor shall assume full responsibility in connection with the use of any explosives even though authorized. Explosives will not be stored within City limits.

S-20.01 SANITARY HOUSE CONNECTION CONFLICTS

Where sanitary house laterals are damaged or broken as a result of Contractor performed water or stormwater construction, such laterals shall be restored by the Contractor according to the City of Tampa Sanitary Sewer Department's specifications and to the satisfaction of the Engineer.

If City Wastewater forces were contacted (notified of impending construction) a minimum of two (2) full business days prior to the excavation that resulted in damage to the facility, and if the facility hit was marked incorrectly (meaning the hit location was more than 24" either side of the marking for 6" or smaller diameter pipe, or 24" outside of the double lines marked (if double lines were marked) for pipe larger than 6" diameter), then the Contractor shall receive compensation for the replacement based on the applicable unit rates provided in the Contract.

If the damaged lateral was correctly marked in the field by City Wastewater forces, no extra compensation shall be paid for this work.

Additional compensation for damaged lateral replacement is contingent upon Contractor compliance with SSOCOF guidelines for excavating. If determined that the Contractor's excavation was not in compliance with SSOCOF Guidelines, additional compensation will not be allowed for the lateral replacement.

S-21.01 STREET AND TRAFFIC SIGNS

Removal and relocation of all street or traffic signs shall be approved through the Traffic Engineering Division, Department of Public Works, City of Tampa, Hillsborough County Traffic, Florida Department

of Transportation, City of Temple Terrace or other applicable permitting agency.

S-22.01 GRADES AND DRAINAGE AT STREET INTERSECTIONS

The Contractor shall pay careful attention to the proper reconstruction of the pavement adjacent to the gutters and at street intersections to obtain satisfactory drainage to the inlets from the intersecting streets. Prior to construction, the Contractor shall determine the flow of water along a street, document where standing water is present.

S-23.01 LINES AND GRADES OF WATER MAIN INSTALLATION

In addition to requirements of Section 8 of the General Provisions, the Contractor is responsible for confirmation of the location of the pipe installation both horizontally and vertically where stated on the plans. These locations are indicated by station and offset. Any deviation from the plans shall be documented by confirmation of vertical and horizontal locations.

All elevations shall be referenced to the following datum:

North American Vertical Datum of 1988 (NAVD88)

NAVD88 is the vertical control datum established for vertical control surveying in the United States of America based upon the General Adjustment of the North American Datum of 1988. The NAVD 88 was established in 1991 by the minimum –constraint adjustment of geodetic leveling observations in Canada, the United States and Mexico. It held fixed the height of the primary tidal bench mark, referenced to the International Great Lakes Datum of 1985 local mean seal level height value, at Rimouski, Quebec, Canada. Additional tidal bench mark elevations were not used due to the demonstrated variations of seal surface topography, i.e., the fact that mean seal level is not the same equipotential surface at all tidal bench marks.

Current City of Tampa Datum (beginning in early 1970's) = NGVD29
Hillsborough County Datum = NAVD88
New FEMA Flood Maps Datum = NAVD88

There is no universal conversion between NGVD and NAVD88 because each datum is based upon an ellipse and the ellipses are not concentric. However, specific points can be converted from one datum to another using a software program (Corpscon 6.01) developed by the US Army Corps of Engineers.

Note: The Contractor is to use existing as-built drawings cautiously as the drawings may have been prepared using the NGVD 29.

S-24.01 NOTICE AND SERVICE THEREOF

All notices, which shall include demands, instructions, requests, approvals, and claims, shall be in writing.

Any notice to or demand upon the Contractor shall be sufficiently given if delivered to the office of the Contractor specified in the bid (or to such other office as the Contractor may, from time to time, designate to the Department in writing), or if deposited in the United States mail in a sealed, postage-prepaid envelope, or delivered, with charges prepaid, to any telegraph company for transmission, in each case addressed to such office.

All notices required to be delivered to the Department shall, unless otherwise specified in writing to the Contractor, be delivered to the Engineer, Tampa Municipal Office Building, 5th Floor North Wing, City Hall Plaza, Tampa, Florida 33602, and any notice to or demand upon the Department shall be sufficiently given as delivered to the office of the Engineer, or if deposited in the United States mail in a sealed, postage- prepaid envelope, or delivered with charges prepaid to any telegraph company for transmission, in each case addressed to said Engineer or to such other representative of the Department or to such other address as the Department may subsequently specify in writing to the Contractor for such purposes.

Any such notice or demand shall be deemed to have been given or made as of the time of actual delivery or (in the case of mailing) when the same should have been received in due course of post or (in the case of telegram) at the time of actual receipt, as the case may be.

S-25.01 REQUIREMENTS FOR CONTROL OF THE WORK

Prior to the start of the work included in this contract, a preconstruction conference may be held by the Engineer to be attended by the Contractor and representatives of the various utilities and others for the purpose of establishing a schedule of operations which will coordinate the work to be done under this contract with all related work to be done by others within the limits of the project. The Contractor shall be prepared for this meeting. He shall present the official construction schedule for all items of work to be accomplished by him, which will be used as a basis for the development of an overall operational schedule.

The progress of the work will be reviewed by the Engineer at the end of each week against the approved official schedule for that work order. If the overall progress of work for that work order is found to be unsatisfactory, the Contractor shall adjust the rate of progress on those items necessary to ensure timely completion of the entire work order.

The Contractor shall conduct his operations in such a manner as will result in a minimum of inconvenience to occupants of adjacent homes and business establishments and shall provide temporary access as directed or as conditions in any particular location may require as determined by the Engineer.

Dust shall be minimized as stated in G-10.06 of the General Provisions. During this Contract, the Contractor, through the use of water and other approved means, shall institute a continuous dust abatement program to the extent that reasonable precaution shall be taken by the Contractor to minimize the emission

or particulate matter into the air. Dust control measures shall be acceptable to the Engineer.

Noise from construction operations shall be minimized in accordance with G-10.04 of the General Provisions.

The Contractor shall provide for satisfactory disposal of surplus water and shall submit a plan to the Engineer for his review prior to initiation and implementation of the plan. Prior approval shall be obtained from the proper authorities for the use of public or private lands or facilities for such disposal.

S-26.01 ENVIRONMENTAL PROTECTION

The Contractor will be held liable for the violation of any and all environmental regulations and permit conditions. Violation citations related to environmental regulations and permit conditions carry civil penalties and, in the event of willful violation, criminal penalties. The fact that the permits are issued to the City does not relieve the Contractor in any way of his environmental obligations and responsibilities.

The Contractor shall evaluate and assess the impact of any adverse effects on the natural environment which may result from construction operations and shall operate to minimize pollution of air, ground or surface waters and vegetation and afford the neighboring community the maximum protection during and upon completion of the construction. The Contractor shall comply with Article 14.01 of the General Provisions and submit a plan to the Engineer for review and acceptance prior to implementation of the plan. Such plan can be combined with other control plan submittals and shall address protective measures to be taken along the route during pipeline construction.

The Contractor shall take sufficient precautions to prevent pollution of streams, lakes, ponds and other water sources with fuels, oils, bitumen, calcium hypochlorite (HTH) or other harmful materials. He shall conduct and schedule his operations so as to avoid pollution or siltation of streams, lakes, etc., including the use of silt barriers, straw bales or other related control methods, as outlined in the FDOT Standard Specifications. Where there is a high potential for erosion, the Contractor shall not expose, by construction operations, a larger area of erosive land at any one time than the minimum necessary for efficient construction operations, and the duration of exposure of the uncompleted construction to the elements shall be as short as practicable. Erosion control features shall be constructed concurrently with other work and at the earliest practicable time.

S-27.01 USE OF PRIVATE PROPERTY

In accordance with Section 10, Paragraph G-10.07 of the General Provisions, all construction activities required to complete this project in accordance with the plans and specifications shall be confined to public rights-of-way, unless the Contractor makes specific arrangements with private property owners for his use of their property. The City assumes no responsibility for damage to private property in such instances. The Contractor is responsible for protection of private property abutting the work areas on this project.

S-28.01 TREE REMOVAL

The Contractor shall be extremely careful and make all efforts to preserve existing trees, plants, and shrubs within the construction area.

Any existing trees, plants, and shrubs to be removed shall be with the prior approval of the Engineer and in accordance with City of Tampa Landscape Ordinance No. 89-262, latest edition, or the requirements of the local agency responsible for overseeing those activities. Separate payment shall be made to the Contractor for the tree removal under the appropriate pay item.

S-29.01 STANDARD DETAILS

In addition to the various details applicable to the project included in the plans, there are Standard Details of the City of Tampa Water Department that shall apply to this work. The details that are to supplement those shown in the plans are included herein.

S-30.01 MAINTENANCE OF CONTINUOUS WATER SERVICE

At the conclusion of every work day, the Contractor is responsible for ensuring that all water services within his effective work area are in service. If a water customer contacts the Department to advise that they have no water service and it is determined to be within the Contractor's work area, the Contractor will be notified of the interrupted service through the Department dispatcher and/or inspection division. Upon notification, the Contractor must mobilize to the site and reinstate the customer’s water service.

If the Contractor fails to mobilize his forces to make the repairs, the Department will mobilize its own forces to reinstate the customer’s water services. In this event, the Contractor shall be charged a five hundred dollar ($500.00) flat rate fee plus actual direct department costs for labor, materials, and equipment used to reinstate the water service. This five hundred-dollar fee and Department cost will be charged for each additional service reinstated. The amount charged will be deducted from the Contractor's payment.

S-31.01 SHUTDOWNS

Unless otherwise approved by the Engineer in an emergency situation, scheduled shutdowns may only occur on Mondays, Tuesdays and Wednesdays. The Contractor shall notify the Engineer at least two weeks in advance of the need for a scheduled shutdown.

Where connections are made to the existing mains, or where other occurrences require a shutdown, the Contractor shall work with the City to perform the work necessary to complete the shutdown. The City will make every effort in advance to perform pre-valve shutdowns, but there are no guarantees as to

whether or not all valves will properly seat in order to guarantee a complete shutdown. In the event of an emergency, the Contractor shall immediately notify the City.

S-32.01 GUARANTEES, WARRANTIES, BONDS

The Contractor, together with his Surety, shall guarantee all the work furnished under the Agreement for a period of one full year from the date of final acceptance, as outlined in Article 6.04 of the Agreement, or within such longer period of time as may be prescribed by law, or by special guarantee or provision of the Contract Documents. Under this guarantee, the Contractor agrees to make good without delay, at his own expense, any failure of any part of the work due to faulty materials or manufacture, or the failure of any equipment furnished to perform satisfactorily all the work within the limits of the Agreement. He will also make good any damage caused by such failure. Any such repair work shall receive a similar guarantee for a similar period of time. This guarantee shall be exclusive of manufacturer's guarantees or warranties exceeding this period.

S-33.01 WORKER SAFETY

The Contractor shall comply with all requirements in OSHA 29 CFR 1910.146 and FAC 38I 20.035 for confined spaces and confined space entry.

S-34.01 ASBESTOS REMOVAL

The Contractor shall secure the services of a State of Florida licensed asbestos abatement contractor for the performance of any and all work involving the cutting, removal, transportation and proper disposal of asbestos containing materials.

The asbestos abatement work must be performed by a contractor having not less than 10 years experience in work of this type and magnitude. The asbestos abatement contractor must submit a listing of the last ten (10) projects performed with the name and telephone number of a contact person. Additionally, the asbestos abatement contractor shall submit a certified letter indicating compliance with the following:

a) Job supervisor's names and confirmation of State of Florida licensure, valid for the period of the contract.

b) Pollution Liability Insurance with a minimum limit of $1,000,000 bodily injury and property damage combined single limit each occurrence to cover its liability as an asbestos abatement contractor. Such policy shall be issued in accordance with the insurance specifications contained in this bid, including naming the City and Contractor (if different than the asbestos abatement contractor) as additional insureds.

c) Statements indicating no pending lawsuits.

d) An acceptable disposal facility is required. Documentation must be submitted to the City Engineer that the proposed disposal site is approved to receive and deposit asbestos waste materials. After deposition, receipts must be submitted to the Engineer to demonstrate that the waste was properly disposed of.

The submittal shall be in sufficient detail to show compliance with the above qualification specification.

S-35.01 PROJECT SIGN

At the direction of the Engineer, the Contractor may be required to furnish and install a project sign for each work order. The Engineer shall also delineate the location and orientation for the sign. The sign shall satisfy all provisions of the Contract documents and compensation will be as outlined in the appropriate pay item descriptions. The Contractor may be required to reletter and reuse an existing sign from a previous work order.

S-36.01 CONTRACTOR'S PRESENCE

The Contractor or his authorized representative shall be present at the job site at all times while the work is in progress. Contractor shall make readily accessible copies of both the Contract Documents and the latest approved working drawings at the job site.

S-37.01 FIELD OFFICE

Field offices will not be required per G6.03 as most of the work will be in City streets.

S-38.01 TEMPORARY FENCING

Whenever temporary site fencing is required per contract plans, the fencing will be added to the project as a change order. Temporary fencing is not required on every work order.

S-38.02 PERMANENT FENCE RESTORATION

When required to remove permanent fence to permit construction, the Contractor shall remove and store fence to prevent damage. Subsequent to construction, the Contractor shall restore fence to its original location and condition, repair damaged fence, or replace with applicable in-kind material.

Whenever permanent fencing is agreed by the Engineer to be removed by the Contractor to facilitate water or stromwater construction, fence removal and restoration shall be performed per G-9.04 – except compensation will be provided to the Contractor, based on either 1) the fencing sub-contractor's invoice, plus 10% OH&P; or, 2) if fence restoration is executed by the Contractor, compensation shall be provided

in accordance with Specific Provision S-4.05. The fence restoration will be added to the project as a change order. Permanent fencing is not required on every work order.

S-39.01 VALVE OPERATIONS ON NEW WATER MAINS

Valve operations on new mains that have been connected to the City of Tampa Water Department’s system in order to flush and clear the lines are to be opened and closed very slowly. Damages to the City of Tampa Water Department’s system due to Contractor’s closing valves on the new main too quickly will be assessed to the Contractor.

SCHEDULE B – SPECIFIC PROVISIONS FOR STORMWATER

SP-1.00 Prevention, Control and Abatement of Erosion and Water Pollution

The Contractor shall be responsible for prevention, control and abatement of erosion, siltation and water pollution resulting from construction of the project until final acceptance of the project.

He shall provide, install, construct, and maintain any covering, mulching, sodding, sand bagging, berms, slope drains, sedimentation structures, or other devices necessary to meet City, County, State and Federal regulatory agency codes, rules and laws.

The Contractor shall take sufficient precautions to prevent pollution of streams, canals, lakes, reservoirs and other water impoundments with fuels, oils, bitumen, calcium chloride or other harmful materials. Also, he shall conduct and schedule his operations so as to avoid or otherwise minimize pollution or siltation of such streams, and the like, and to avoid interference with movement of migratory fish. No residue from dust collectors or washers shall be dumped into any live stream.

Storm drainage facilities, both open and closed conduit, serving the construction area shall be protected by the Contractor from pollutant and contaminants. If the Engineer determines that siltation of drainage facilities has resulted due to the project, the Engineer will advise the Contractor to remove and properly dispose of the deposited material. Should the Contractor fail to or elect not to remove the deposits, the City will provide maintenance cleaning as needed and will charge all costs of such service against the amount of money due or to become due the Contractor.

Construction operations in rivers, channels, streams, tidal waters, canals and other impoundments shall be restricted to those areas where it is necessary to perform filling or excavation to accomplish the work shown in the Plans and to those areas which must be entered to construct temporary or permanent structures. As soon as conditions permit, rivers, channels, streams and impoundments shall be promptly cleared of all obstructions placed therein or caused by construction operations.

Except as necessary for construction, excavated materials shall not be deposited in rivers, streams, canals or impoundments, or in a position close enough thereto to be washed away by high water or runoff.

The Contractor shall not disturb lands or waters outside the limits of construction except as may be found necessary and authorized by the Engineer.

The location of and methods of operation in all detention areas, borrow pits, material supply pits and disposal areas furnished by the Contractor shall meet the approval of the Engineer as being such that erosion during and after completion of the work will not likely result in detrimental siltation or water pollution.

The Contractor shall comply with the applicable provisions of the Hillsborough County Land Development Code concerning grading, filling, excavation, soil removal, and the like, as amended.

The Contractor shall schedule his operations such that the area of unprotected erodible earth exposed at any one time is not larger than the minimum area necessary for efficient construction operations; and the duration of exposed, uncompleted construction to the elements shall be as short as practicable.

Clearing and grubbing shall be so scheduled and performed that grading operations can follow immediately thereafter and grading operations shall be so scheduled and performed that permanent erosion control features can follow immediately thereafter if conditions on the project permit.

The Engineer may limit the surface areas of unprotected erodible earth exposed by clearing and grubbing, excavation or filling operations and may direct the Contractor to provide immediate erosion or pollution control measures to prevent siltation or contamination of any river, stream, channel, tidal waters, reservoir, canal or other impoundment or to prevent damage to the project or property outside the project right of way.

SP-2.00 Existing Storm Sewerage Facilities

In the course of the work, it will be necessary to install the pipeline under or closely adjacent to existing culverts and other storm sewerage facilities. The Contractor shall protect all existing storm sewerage facilities which are shown on the Plans or located in the field during the course of the work. When approved by the Engineer, relocation or special maintenance of storm sewerage facilities during construction will be permitted. Disruption of service shall be kept to a minimum.

Facilities which are damaged due to the work method of the Contractor shall be replaced by the Contractor to such limits as directed by the Engineer. Materials used for such replacements shall be similar to those used in the existing facility and shall conform to City Standards for the construction of storm sewers for work done in the City of Tampa. Work done outside the City shall conform to the Florida Department of Transportation "Standard Specifications for Road and Bridge Construction."

The cost of protecting, replacing, relocating and maintaining storm sewerage facilities shall be included in the various classified unit price Contract Items for pipelines, or in the total Lump Sum Price, as applicable, and no separate payment will be made therefor, unless otherwise specified in other Contract Items.

The maintenance and guarantee provisions of the Agreement shall also apply to all replacements of damaged or relocated storm sewerage facilities accomplished by the Contractor.

SP-3.00 Inspection of Reinforced Concrete Pipe

All reinforced concrete pipe, reinforced concrete arch culverts, storm drain, and sewer pipe, and all reinforced concrete elliptical pipe shall be inspected and accepted by a testing laboratory approved by the Engineer.

Each pipe shall bear the stamp of acceptance of the testing laboratory and the Engineer shall be supplied with a copy of each inspection report, including a certification of "D-load," absorption test, conformance to the dimensional requirements, and all other designations of ASTM specifications. The cost of such inspection services shall be included in the unit prices for the respective pipe items.

Unless specified otherwise on the Plans, or directed by the Engineer, all storm sewer pipes shall be ASTM Class III, B wall thickness.

Prior to the manufacture of any reinforced concrete sewer pipe, details of the steel reinforcing and concrete strength together with proof of the adequacy of the pipe design for each size and class of pipe shall be submitted to the Engineer for approval.

As proof that the design of the pipe meets the 0.01-inch crack and ultimate load strength requirements for this class of pipe, the manufacturer shall submit the results of properly certified three-edge-bearing tests already witnessed and verified by an approved independent testing laboratory on identical pipe of identical design or, if such three-edge-bearing test results are not already available or are not acceptable, shall have one pipe, at least four feet in length, tested in three-edge-bearing and witnessed and verified by an approved independent testing laboratory and shall submit certified test results. All costs associated with proof-of-design tests shall be borne by the Contractor.

Concrete sewer pipe shall be tested in accordance with the applicable provisions of ASTM Des: C 497 as required by the ASTM Specification for the pipe.

The basis of acceptance for reinforced concrete pipe shall be in accordance with Section 5.1.1 of ASTM Des: C 76 (round pipe) or ASTM Des: C 507 (elliptical pipe). During manufacture, at least one pipe section shall be shop tested to destruction in three-edge-bearing in the presence of an approved independent testing laboratory for each 1,000 feet of pipe or fraction thereof made. The test pipe sections shall be a minimum of four feet in length. The manufacturer shall have a pipe casting form, of the same inside diameter as the pipe being manufactured, together with the proper reinforcing steel cages, available at all times during manufacture for the purpose of casting test pipes at the times designated by the Engineer. Test pipe sections shall not be lined with plastic sheet. No pipe shall be tested at an age of less than 12 days, and no pipe shall be delivered to the job site until satisfactory completion of shop tests on representative pipe specimens for each 1,000-foot lot of pipe manufacturer. Proof-of-design tests performed on pipe manufactured for this Contract will be accepted by the City in lieu of shop tests for the first 1,000- foot lot of pipe of each size and class manufactured. This test must be within one (1) year of shipment for each size and class of pipe.

The basis for acceptance of nonreinforced concrete pipe shall be in accordance with Section 4.1 of ASTM Des: C 14.

The Contractor shall obtain, review and submit to the Engineer four (4) copies of certified test reports made by the City's inspection engineer. All costs associated with shop testing shall be borne by the Contractor.

SP-4.00 Elliptical Concrete Pipe and Round Concrete Pipe Joints

All joints in elliptical concrete pipe and round R.C.P. shall be provided with filter fabric or concrete jacket as per D.O.T Standard Index No. 280 and as directed by the Engineer. Filter fabric shall be provided at all joints, except the last two joints not supported by a structure; these joints shall be provided with a concrete collar.

The cost of the filter fabric jackets and concrete collars shall be included in the unit cost of pipe. No extra payment will be paid for such jackets or collars.

SP-5.00 Concrete Requirements

Workmanship and Materials Section 345 shall apply to all concrete work relating to the stormwater work.

SP-6.00 Standard for Filter Fabric

Unless specified otherwise on the Plans, filter fabric shall be nonwoven fabric per F.D.O.T. Specification Sections 514 and 985. Payment for furnishing and placing the filter fabric shall be included in the contract price for the item or items to which it is incidental.

SP-7.00 Measurement for Payment

The quantity, in linear feet, to be measured for payment under the various classified unit price Contract Items for pipelines in open cut, or in the total Lump Sum Price, as applicable, shall be the actual length of new pipelines placed in the work, as shown, specified and directed. Depth of cut for sanitary sewers shall be measured from the original ground surface to the pipe invert. Pipelines will be measured along the centerline of the pipe as follows:

1. The measured length of gravity sanitary sewers, regardless of pipe material, will include all fittings, short tunnels and manholes with no deductions for wyes, tees and the width of manholes. Deductions in the measured length of gravity sanitary sewers will be made for the width of structures, such as junction boxes, measured from the outside face to the outside face of the structure walls, plus one foot.

2. The measured length for sanitary or stormwater force mains will include all fittings and short tunnels with deductions for the laid length of valves.

3. Deductions in the measured length of storm sewers will be made for the width of all structures, including manholes and inlets, measured from the inside wall to the inside wall of the structure.

SP-8.00 Temporary Bulkheads

At the ends of contract sections, where adjoining pipelines or structures have not been completed and are not ready to be connected, temporary bulkheads, approved by the Engineer, shall be built. Such bulkheads encountered in connecting pipelines or structures included in this Contract, or pipelines or structures previously built, shall be removed by the Contractor when the need for them has passed or when ordered by the Engineer.

SP-9.00 Stormwater Pipe TV Inspection

All proposed stormwater mainline pipe shall be T.V. inspected as per FDOT specification section 430-4.8. The video DVD shall be provided to the City Engineer issued as well as final as-built plans will require submittal and accepted by, the Engineer. prior to the final

payment being issued.

All costs associated with T.V. pipe inspection shall be included in the various Contract Item Unit prices for pipelines and no separate payment will be made therefor.

SP-10.00 Reconstruction of Swales/Ditches or low lying areas

This contract may consist of project areas where existing ditches, swales or low areas shall be regraded.

The Contractor may be required to fill existing ditches or swales as per designed elevations. The Contractor is to use excavated, suitable material from storm sewer construction for fill.

The cost of ditch or swale reconstruction including all material, labor, equipment, etc., to complete the job, excluding the cost of sodding, shall be included under the various classified unit price items, as applicable.

SP-11.00 Castings Identification

All casting covers, such as for inlets and manholes, shall bear the appropriate City of Tampa identification for stormwater, as shown on the Plans or as directed by the Engineer.

SP-12.00 Rubble Riprap

Rubble riprap shall be placed against the embankment or other work to be protected in conformity with the specifications, lines, grades, dimensions, and notes shown in the Plans or as directed by the Engineer.

Rubble riprap shall consist of broken concrete or of broken stone. The material shall be sound and durable, with specific gravity of at least 1.90. It shall be free of cracks, soft seams, and other structural defects. The pieces shall be roughly angular and shall be reasonably free from thin, flat, or elongated pieces.

Rubble shall be of a graded mixture, with individual pieces weighing, in general, from 20 to 300 pounds each. Not over 25 percent of the total volume shall be composed of pieces weighing less than 50 pounds each and at least 50 percent of the total volume shall be composed of pieces weighing 100 pounds or more.

* * *

SCHEDULE A - WATER CONTRACT PAY ITEMS for MAJOR PROJECTS

C1.00 General

The Contractor shall receive and accept the compensation provided in the Proposal and the Agreement as full payment for furnishing all materials and all labor, tools and equipment, for performing all operations necessary to complete the Major Projects work under the Agreement, and also in full payment for all loss or damages arising from the nature of the work, or from any discrepancy between the actual quantities of work and quantities herein estimated by the Engineer, or from the action of the elements or from any unforeseen difficulties which may be encountered during the prosecution of the work until the final acceptance by the Department.

It is the intent of these contract documents that any cost for which compensation is not directly provided by a bid item shall be prorated and included in the bid item for which they are required. Failure of the Contractor to follow this procedure shall be basis for rejection of his bid.

The prices stated in the Bid Proposal include all costs and expenses for taxes, labor, equipment, commissions, transportation charges and expenses, patent fees and royalties, labor for handling material during inspection together with any and all other costs and expenses for performing and completing the work as shown on the plans and specified herein. The basis of payment for any item at the unit price shown in the Proposal shall be in accordance with the description of that item in this Section.

No separate payment will be made for the following items, the cost of such work shall be Included in the applicable contract pay items of work, including separate mobilization/ demobilization charges for compliance with FDEP or any other agency:

1. Separate mobilization charges for each work order except as noted in Section 9.96;
2. Clearing and grubbing;
3. Excavation, including necessary pavement/slab removal;
4. Shoring and sheeting as required by OSHA trench excavation safety standards unless specifically provided for in a pay item;
5. Dewatering and proper disposal of all water unless specifically provided for in a pay item;
6. Backfill and proper compaction, including suitable fill;
7. Grading;
8. Replacement or restoration of paved or unpaved roadways, grass and shrubbery plots outside of established pay limits;
9. Temporary facilities and controls during construction such as water/sanitary facilities, traffic control, informational signs and environmental protection, unless specifically provided for in a pay item;
10. Providing and maintaining silt barriers for drainage structures and silt fences for the

duration of the project;

11. Removing and legally disposing of waste material due to construction, including but not limited to valve boxes that need to be removed from abandoned water mains;
12. Cleanup and restoring the job site to its original condition, which includes but is not necessarily limited to restoring the ground surface to its original grade;
13. Testing and placing system in operation, including re-mobilization for FDEP testing;
14. Any material and equipment required to be installed and used for the tests;
15. Maintaining the existing quality of service during construction, including flushing mains that are cleared but not put into service after the bac-T tests are complete;
16. Repair of sanitary sewer house laterals that were properly marked (see Specific Provision S-20.01)
17. Repair of water services damaged during construction;
18. Adjusting new or existing water meter boxes to grade which are affected by construction;
19. Appurtenant work as required for a complete and operable system;
20. Coordination with all Federal, State and Local agencies and utilities;
21. Cutting of existing or new pipe for purposes of abandonment or installation of new pipe, valves or fittings;
22. Tree trimming as required by the City of Tampa Parks Department or any other agency unless specifically provided for as a contract item;
23. Verification of pipe elevation as stated in Section 8 of the General Provisions and Section S-23.01 the Specific Provisions;
24. Repair of private irrigation systems damaged during construction;
25. Furnishing and installing suitable temporary fences, as directed by the Engineer, to adequately secure areas protected by a permanent fence when that permanent fence must be removed. The temporary fence shall remain in place until the permanent fence is replaced;
26. Furnishing and installing all HDPE MJ adapters, HDPE flanged adapters, HDPE electrofusion tapping tees, electrofusion corporation saddles or HDPE electrofusion couplings;
27. Maintaining red-line drawings of changes to construction plans, to be submitted for FDEP clearance;
28. Furnishing record drawings based on the redline drawings in AutoCAD 2015 or higher and one set of drawings on paper. The City will provide the AutoCAD plans used for the design. **Final Payment will not be made for work orders until As-built drawings are received.**
29. Furnishing and installing polyethylene encasement per Standard Detail 2.05 for all buried ductile iron pipe, all fittings and tapping sleeves.

The Contractor's attention is again called to the fact that the quotations for the various items of work are intended to establish a total price for completing the work in its entirety. Should the Contractor feel that the cost for any item of work has not been established by the Proposal or Contract Pay Items, he shall include the cost for that work in some other applicable bid item, so

that his proposal for the project does reflect his total price for completing the work in its entirety.

The Contractor may be authorized to receive payment after each work order is complete, approved, accepted, and administratively processed by the City.

The City shall have the option of making monthly partial payments on those work orders that exceed $100,000.00. Payment of these partial payment requests shall be for the approved and accepted amount of work that the Contractor has accomplished in the previous month for that particular work order. The approved amount of work is defined as that amount of work associated with an active work order project which, in the opinion of the Engineer, is progressing at a satisfactory rate of completion. Satisfactory rate of completion is interpreted to mean that once a work order project is started by the Contractor, the job must be actively pursued to include site preparation, utility and agency coordination, installation of all pipe and appurtenances, restoration, clean up, testing, disinfection, and final acceptance.

Following final payment by the City, the Contractor shall maintain the surface of the unpaved trenches, shrubbery, fences, sod, and other surfaces disturbed for a period of one (6) months thereafter and shall maintain the repaved areas, curbs, gutters and sidewalks, trees, if replaced by the Contractor, for one (1) year after acceptance. The cost of maintaining the restored areas is considered incidental to the cost of restoring the areas disturbed by the Contractor. These costs shall be prorated and included in the cost for the bid item for which it is required.

The quantities for payment under this Agreement shall be determined by actual measurement of the completed items, in place, ready for service and accepted by the City, in accordance with the applicable method of measurement therefore contained herein. A representative of the Contractor shall witness all field measurements.

All work shall be in accordance with the Technical Specifications and Standard Details herein. All materials shall be in accordance with the Material Specifications herein.

C2.00 Pipeline Installation

C2.10 Ductile Iron and PVC Pipe

The Contractor shall provide all labor, equipment, and materials to furnish and install the ductile iron pipe or PVC pipe.

Furnishing and/or installing ductile iron or PVC pipe shall include, but may not be limited to:

1. Furnishing all construction layouts as outlined in Section S-14.01 and S-23.01;
2. Field locating all utilities to confirm horizontal and vertical location in areas of possible conflict;

3. Furnishing all labor equipment and materials to excavate the trench;
4. Maintaining the trench which shall include dewatering and sheeting and bracing as required by OSHA or as directed by the Engineer standards unless specifically provided for in a pay item;
5. Cleaning dirt and foreign material from within pipe and bell;
6. Beveling field-cut joints and pipe shorts;
7. Furnishing and installing EPDM gaskets for all DIP and PVCP;
8. Furnishing and installing Department approved pipe and any pipe shorts as part of the pipeline;
9. Furnishing and installing Department approved pipe in casing pipe when shown on the plans;
10. Installing push-on joint restraint gaskets for DIP as shown on the plans or as directed by the Engineer (furnishing push-on restraint gaskets will be compensated under appropriate pay items);
11. Furnishing and installing blue for polyethylene encasement per standard detail 2.05;
12. Furnishing and installing 2, 4,6, 8, 12, and 16-inch nominal diameter PVC pipe or 4, 6, 8, 12, 16, 20, 24, 30, 36, 42, or 48-inch nominal diameter ductile iron pipe at various depths;
13. Furnishing and installing 2-inch PVC fittings when necessary at various depths;
14. Furnishing and installing on all PVC pipe and fittings, a continuous double run of 14-gauge wire attached to the top of the pipe with duct tape. The wire shall be looped around each bell. There shall be no dead ends and the locator wire shall be brought into a separate curb stop box at every valve box;
15. Cleaning up and removing excess water main pipe and appurtenances;
16. Pressure testing the water main pipe;
17. Furnishing and installing temporary pipe short’s valves and bends for full port flushing;
18. Furnishing and installing valve location protection devices per Standard Detail 3.05 whenever needed to keep valve locations visible;
19. Disinfecting the water main pipe and bacteriological testing;
20. Furnish and apply paint for any above ground or aerial crossing pipe and appurtenances. Paint to be high-grade enamel, OSHA blue for potable water or purple for reclaim water as directed by the Engineer;
21. Backfilling and compacting the trench;
22. Cleaning up and restoring the job site which shall include re-grading the terrain; and
23. Removing and legally disposing all waste materials.

Cover over pipe shall be defined as the vertical distance from the top of the pipe to the surface grade above the main. Trench depth shall be defined as the vertical distance from the bottom of the barrel of the pipe to the surface grade above the main.

Payment for connecting new water mains to existing water mains will be made utilizing the contract unit price for installing the fittings, polywrap, or valves used in the connection.

The cost to hydrostatically test and disinfect the ductile iron or PVC water mains shall be prorated and included in the pipeline construction unit prices. The prorated cost should include, but may not be limited to furnishing and installing all:

1) Material;
2) Labor;
3) Necessary pumps;
4) Recorder charts;
5) Gages (300PSIG limit, oil filled);
6) Chemicals;
7) Temporary valves;
8) Temporary plugs;
9) Sample taps, (including installation of brass dry main plugs after tap removal);
10) Blow off assemblies (including removal after disinfection is complete);
11) Dry main plugs;

necessary to pressure test and disinfect various sizes and depths of ductile iron pipe or PVC pipe. Furthermore, no extra compensation shall be paid to the Contractor for:

1. Furnishing and installing brass, dry main plugs at the locations of all removed sample taps, or
2. Removing existing "end of line" or blow-off valves after the pipeline has been disinfected and prior to connecting the newly installed pipeline to the existing water main.

All temporary materials or materials not remaining in the ground after the completion of the disinfection and pressure testing shall remain the property of the Contractor.

The pipe quantities to be paid for under this section shall be based on the size and the horizontal distance in linear feet of ductile iron pipe, PVC pipe, or steel casing pipe measured along the top centerline of the pipe in place complete and acceptable to the Engineer.

Payment shall be made under:

Item No.	Description	Unit
2100	Furnish and install 4" ductile iron pipe (0-5' trench)	LF
2101	Furnish and install 4" ductile iron pipe (+5' trench)	LF
2102	Furnish and install 6" ductile iron pipe (0-5' trench)	LF
2103	Furnish and install 6" ductile iron pipe (+5' trench)	LF

2104	Furnish and install 8" ductile iron pipe (0-5' trench)	LF
2105	Furnish and install 8" ductile iron pipe (+5' trench)	LF
2106	Furnish and install 12" ductile iron pipe (0-5' trench)	LF
2107	Furnish and install 12" ductile iron pipe (+5' trench)	LF
2108	Furnish and install 16" ductile iron pipe (+5' trench)	LF
2109	Furnish and install 20" ductile iron pipe (+5' trench)	LF
2110	Furnish and install 24" ductile iron pipe (+5' trench)	LF
2111	Furnish and install 30" ductile iron pipe (+5' trench)	LF
2112	Furnish and install 36" ductile iron pipe (+5' trench)	LF
2113	Furnish and install 42" ductile iron pipe (+5' trench)	LF
2114	Furnish and install 48” ductile iron pipe (+5’ trench)	LF
2150	Furnish and install 2" PVC pipe and fittings at various depths	LF
2151	Furnish and install 4" PVC pipe (0-5' trench)	LF
2152	Furnish and install 4" PVC pipe (+5' trench)	LF
2153	Furnish and install 6" PVC pipe (0-5' trench)	LF
2154	Furnish and install 6" PVC pipe (+5' trench)	LF
2155	Furnish and install 8" PVC pipe (0-5' trench)	LF
2156	Furnish and install 8" PVC pipe (+5' trench)	LF
2157	Furnish and install 12" PVC pipe (+5' trench)	LF
2158	Furnish and install 16" PVC pipe (+5' trench)	LF
2159	Furnish and install 6" EagleLok or CertaLok restrained jt. PVC pipe	LF
2160	Furnish and install 8" EagleLok or CertaLok restrained jt. PVC pipe	LF
2161	Furnish and install 12" EagleLok or CertaLok restrained jt. PVC pipe	LF
2162	Furnish and install 16" EagleLok or CertaLok restrained jt. PVC pipe	LF

C2.20 Furnish and Install HDPE Pipe by Horizontal Directional Drilling

The Contractor shall provide all labor, equipment, and materials to furnish and install the HDPE pipe using horizontal directional drilling (HDD) as a work method. The furnishing and installation of the HDPE pipe shall include, but may not be limited to:

1. Furnish and install construction layout by a registered professional land surveyor;
2. Field locating all utilities, except existing water lines not shown properly on the plans, to confirm horizontal and vertical location in areas of possible conflict;
3. Excavating the access pits;
4. Maintaining the pits which shall include dewatering and sheeting and bracing as required by OSHA or as directed by the Engineer;
5. Joining pipe sections by butt fusion or by furnishing and installing an appropriately sized HDPE electrofusion coupling;
6. Pigging, cleaning or flushing the line to remove dirt, debris if directed by the engineer;
7. Furnishing and installing temporary valve, pipe shorts and bends to accomplish full port flushing of mains;

8. Furnishing and installing Department approved pipe and any pipe shorts as part of the pipeline;
9. Furnishing and installing 4, 6, 8, 10, 12, and 14-inch nominal diameter HDPE pipe and 2-inch HDPE tubing at various depths by horizontal directional drilling;
10. Furnishing and installing on all HDPE pipe and tubing, two continuous 10 gauge wires along the top of the pipe. There shall be no dead ends and each locator wire shall be routed into a curb stop box at every valve box. Connections between wire ends shall be made using an approved connection as shown in the standard details;
11. Furnishing and installing 10 gauge tracer wire on Ductile Iron Water Mains 16” and greater;
12. Removing excess water main pipe and appurtenances;
13. Pressure testing the water main pipe;
14. Disinfecting the water main pipe;
15. Furnishing and installing push-on and mechanical joint restrainers on existing pipe as shown on the plans or as directed by the Engineer;
16. Backfilling and compacting the trenches or pits including re-grading the terrain;
17. Cleaning up and restoring the job site which shall include re-grading the terrain; and
18. Removing and legally disposing of all waste materials.

Cover over pipe shall be defined as the vertical distance from the top of the pipe to the surface grade above the main. Trench depth shall be defined as the vertical distance from the bottom of the barrel of the pipe to the surface grade above the main.

Payment for connecting new water mains to existing water mains will be made utilizing the contract unit price for installing the tapping sleeves, restraints, fittings or valves used in the connection.

The cost to hydrostatically test and disinfect the HDPE water mains shall be prorated and included in the HDPE pipeline construction unit prices. The prorated cost should include, but may not be limited to furnishing and installing all:

1) Material
2) Labor
3) Necessary pumps
4) Recorder charts
5) Gages (200 PSIG limit, oil filled)
6) Chemicals
7) Temporary valves
8) Temporary plugs
9) Sample Taps, (including furnishing and installation of brass dry main plugs in HDPE electrofusion corporation saddles after sample tap removal)
10) Blow off assemblies (including removal after disinfection is complete)

11) Dry main plugs installed in HDPE electrofusion corporation saddles.

necessary to pressure test and disinfect various sizes and depths of HDPE pipe. Furthermore, no extra compensation shall be paid to the Contractor for:

1. Furnishing and installing brass, dry main plugs in HDPE electrofusion corporation saddles at the locations of all removed sample taps, or
2. Removing existing "end of line" or blow off valves after the pipeline has been disinfected and prior to connecting the newly installed pipeline to the existing water main.

All temporary materials or materials not remaining in the ground after the completion of the disinfection and pressure testing shall remain the property of the Contractor.

The pipe quantities to be paid for under this section shall be based on the size and the horizontal distance in linear feet of HDPE pipe measured along the top centerline of the pipe in place complete and acceptable to the Engineer.

Payment shall be made under:

Item No.	Description	Unit
2200	Furnish & install 2" HDPE tubing w/HDPE transition adapters at various depths	LF
2201	Furnish & install 4" HDPE pipe w/ HDPE-MJ adapters at various depths	LF
2202	Furnish & install 6" HDPE pipe w/HDPE-MJ adapters at various depths	LF
2203	Furnish & install 8" HDPE pipe w/ HDPE-MJ adapters at various depths	LF
2204	Furnish & install 10" HDPE pipe w/ HDPE-MJ adapters at various depths	LF
2205	Furnish & install 12" HDPE pipe w/ HDPE-MJ adapters at various depths	LF
2206	Furnish & install 14" HDPE pipe w/ HDPE-MJ adapters at various depths	LF

C2.30 Temporary Service Lines

The Contractor shall provide all labor, equipment and materials necessary to furnish, install and remove temporary 2-inch service lines, connect the existing meters to the temporary service lines, and remove and dispose of all waste materials. The cost to reconnect the meters to the new mains will be paid under the appropriate meter set item.

Work shall include but may not be limited to:

1. Making all necessary excavations;
2. If necessary, burying the pipe to prevent a tripping hazard or securing the pipe to prevent damage during construction;
3. Making necessary taps to existing main or service line;

4. Making all necessary taps (2 may be required) that are required to affect the tie-in connection;
5. Furnishing and installing all necessary materials required to make the tie-in connections;
6. Furnishing and installing 2-inch high density polyethylene (HDPE) tubing; and
7. Furnishing and installing cap(s) or plug(s) and restraints adequate to withstand a working pressure of 150 psi, on all in-service open end(s) of pipe;
8. Furnishing all labor equipment and materials to remove the temporary service when no longer needed;
9. Backfilling, compacting, and re-grading the terrain;
10. Cleaning up and restoring the job site which shall include re-grading the terrain; and
11. Removing and legally disposing of all waste materials.

Item No.	Description	Unit
2300	Furnish, install and remove 2-inch temporary service lines	LF

C2.40 Casing Installation

The Contractor shall provide all labor, equipment and materials to furnish and install steel casing pipe. The installation of steel casing pipe shall include, but may not be limited to:

1. Excavating the jacking and recovery pits;
2. Maintaining the jacking and recovery pits that shall include dewatering and sheeting and bracing where required or as directed by the Engineer;
3. Dewatering the roadway;
4. Furnishing, cutting and full depth welding the steel casing pipe;
5. Jacking the steel casing pipe;
6. Furnishing and installing the pipe "casing spacers" on the carrier pipe;
7. Furnishing and installing bulkheads inside the casing pipe ends to seal the inner space;
8. Backfilling and compaction of jacking and recovery pits;
9. Cleaning up and restoring the job site which shall include re-grading the terrain; and
10. Removing and legally disposing all waste materials.

Compensation for installing the carrier pipe in the casing pipe will be made under the appropriate pipeline construction pay item. For 4" through 20" casing, the pipe installed through the casing will be paid for utilizing the minimum depth of cover (i.e. 0-5'. The Engineer can exercise his authority and elect to have the Contractor install only the casing pipe, thereby waiving installation requirements for the carrier pipe.

Payment shall be made under:

Item No.	Description	Unit

2400	Furnish and install 4" OD steel casing pipe	LF
2401	Furnish and install 12" OD steel casing pipe	LF
2402	Furnish and install 14" OD steel casing pipe	LF
2403	Furnish and install 16" OD steel casing pipe	LF
2404	Furnish and install 20" OD steel casing pipe	LF
2405	Furnish and install 24" OD steel casing pipe	LF
2406	Furnish and install 30" OD steel casing pipe	LF
2407	Furnish and install 36" OD steel casing pipe	LF
2408	Furnish and install 42" OD steel casing pipe	LF
2409	Furnish and install 48" OD steel casing pipe	LF
2410	Furnish and install 54" OD steel casing pipe	LF

C2.50 Removal and Abandonment of Pipe

The Contractor shall provide all labor, equipment and materials to remove the abandoned pipeline and appurtenances (such as valves, fittings, and other materials) as designated on the plans or directed by the Engineer.

The removal of the abandoned pipe shall include, but may not be limited to:

1. Furnishing all equipment, labor, tools and equipment to excavate the trench;
2. Maintaining the trench;
3. Removing the abandoned pipeline and appurtenances;
4. Furnishing and installing grout to plug any abandoned open-end pipe;
5. Furnishing and installing a cap or plug and restrain adequately to withstand a working pressure of 150 psi, on all in-service open end pipe;
6. Transporting the removed pipe and appurtenances, without delay, to a location designated by the Engineer;
7. Unloading the removed pipeline and appurtenances at the designated location;
8. Cutting of any existing pipe to accommodate abandonment;
9. Backfilling and compacting the trench;
10. Cleaning up and restoring the job site which shall include re-grading the terrain; and
11. Removing and legally disposing of all waste materials.

Payment shall be made based on the size and horizontal distance in linear feet of pipeline removed measured along the top centerline. At the Department's option, all abandoned pipe and appurtenances shall remain the property of the Department. If the Department opts not to remain owner of the removed facilities, then the Contractor shall remove and properly dispose of the facilities at his expense.

Payment shall be made under:

Item No.	Description	Unit
2500	Remove 3" and smaller diameter abandoned pipe	LF
2501	Remove 4" - 12" diameter abandoned pipe	LF
2502	Remove larger than 12” diameter abandoned pipe	LF

C2.60 Cutting and Plugging

The Contractor shall provide all labor, equipment and materials to cut and plug 16-inch and smaller pipe as designed on the plans or as directed by the Engineer. To cut and plug pipe shall include, but may not be limited to:

1. Excavating and maintaining the trench;
2. Performing a minimum of two complete cuts of the pipe to facilitate the plugging.
3. Removing of pipe or appurtenances to allow for the installation of plugs on 8" or less open ends of pipe;
4. Furnishing and installing grout to plug any abandoned open end(s) pipe;
5. Furnishing and installing cap(s) or plug(s) and restraints to adequately withstand a working pressure of 150 psi, on all in-service open end(s) of pipe;
6. Backfilling and compacting the trench;
7. Cleaning up and restoring the job site which shall include re-grading the terrain; and
8. Removing and legally disposing of all waste materials.

Payment shall be made for each cut and plug accomplished and accepted by the Engineer.

Payment shall be made under:

Item No.	Description	
2600	Cut and Plug 3" and smaller	EA
2601	Cut and Plug 4", 6" and 8" Pipe	EA
2602	Cut and Plug 10, 12, and 16” Pipe	EA

C2.70 Pipeline Incidentals

Furnishing and installing 4-inch to 8-inch ductile iron pipe under tree root systems by hand excavating, mole excavation or pushing as directed by the Engineer. This shall be considered complete compensation for pipe installation. **There will be no additional payment under the standard pipe installation pay item.**

1. Furnishing all labor equipment and materials to excavate the trench;
2. Maintaining the trench which shall include dewatering and sheeting and bracing as required by OSHA or as directed by the Engineer standards unless specifically provided for in a pay item;
3. Cleaning dirt and foreign material from within pipe and bell;
4. Furnishing and installing 6” or 8” ductile iron pipe;
5. Furnishing and installing EPDM push-on gaskets for all DIP;
6. Furnishing and installing blue for polyethylene encasement per standard detail 2.05;
7. Backfilling and compacting the trench including re-grading the terrain;
8. Cleaning up and removing excess water main pipe and appurtenances;
9. Pressure testing the water main pipe;
10. Disinfecting the water main pipe;
11. Cleaning up and restoring the job site which shall include re-grading the terrain; and
12. Removing and legally disposing all waste materials.

Payment shall be made under:

Item No.	Description	Unit
2700	Furnish and push 4-in to 8-in ductile iron pipe beneath/through root system	LF

C2.80 Incidental Tapped Connections

The Contractor shall provide all labor, equipment and material to connect existing 3-inch and smaller water mains to the newly installed water mains (see standard detail 5.06). The incidental tapped connections shall include, but may not be limited to:

1. All necessary excavations;
2. Maintaining the excavation which shall include dewatering, bracing and sheeting where required or as directed by the Engineer;
3. Making a minimum of two cuts into the existing pipe to facilitate the connection to the existing pipe;
4. Making all necessary taps (2 may be required) that are required to affect the tie-in connection;
5. Furnishing and installing all necessary material, including reducers and increasers approved by the Water Department, which is required to construct the tie-in connections;
6. Furnishing and installing a 2-inch gate valve and box close the large main;
7. Furnishing and installing 2-inch high density polyethylene (HDPE) tubing;
8. Furnishing and installing cap(s) or plug(s) and restraints adequate to withstand a working pressure of 150 psi, on all in-service open end(s) of pipe;
9. Backfilling and compacting the trench;
10. Cleaning up and restoring the job site which shall include re-grading the terrain; and

11. Removing and legally disposing of all waste materials.

Payment shall be made for each 3-inch and smaller tapped connection furnished and installed into the piping system complete and working to the satisfaction of the Engineer. Payment for 2-inch gate valve and box will be made under the appropriate pay item number.

Payment shall be made under:

Item No.	Description	Unit
2800	Furnish and install 3" and smaller tapped connection (0-15' long)	EA
2801	Furnish and install 3" and smaller tapped connection (15' and up)	EA

C3.00 Thrust Restraint

The Contractor shall provide for all labor, equipment and materials to completely furnish and/or install thrust restraint. The furnishing and installation of the thrust restraint shall include but not be limited to:

1. Excavating the trench;
2. Maintaining the trench that shall include dewatering and bracing and sheeting where required or as directed by the Engineer;
3. Furnishing and installing approved wedge action restraint fitting or flange joint restraints;
4. Furnishing and installing manufactured restrained joints;
5. Furnishing of approved push-on restraint EPDM rubber gasket-type restraining devices (gaskets with stainless steel locking segments vulcanized into the rubber) on new push-on ductile iron pipe;
6. Furnishing and installing approved restraining devices on proposed PVC push-on joint pipe;
7. Furnishing and installing approved restraining devices on joints of existing pipe;
8. Backfilling and compacting the trench;
9. Cleaning up and restoring the job site which shall include re-grading the terrain; and
10. Removing and legally disposing of all waste materials.

Payment for installation of manufactured restrained joints shall be for each bell and spigot joint assembled.

No additional compensation shall be made to the Contractor for field poured concrete in excess of the amount detailed in the Technical Specification or Standard Details without approval by the Engineer.

Payment will not be credited for restraining devices installed in conjunction with fire hydrant

installations. Payment for installation of thrusting restraints for fire hydrants and for pipe on fire hydrant leads is to be included in the price quoted for installation of fire hydrant assemblies.

Payment shall be made under:

Item No.	Description	Unit
3000	Furnish & install 4" wedge-action or flange restraints	EA
3001	Furnish & install 6" wedge-action or flange restraints	EA
3002	Furnish & install 8" wedge-action or flange restraints	EA
3003	Furnish & install 12" wedge-action or flange restraints	EA
3004	Furnish & install 16" wedge-action or flange restraints	EA
3005	Furnish & install 20" wedge-action or flange restraints	EA
3006	Furnish & install 24" wedge-action or flange restraints	EA
3007	Furnish & install 30" wedge-action or flange restraints	EA
3008	Furnish & install 36" wedge-action or flange restraints	EA
3009	Furnish & install 42" wedge-action or flange restraints	EA
3010	Furnish & install 48" wedge-action or flange restraints	EA
3030	Furnish & install 20" manufactured restrained joints	EA
3031	Furnish & install 24" manufactured restrained joints	EA
3032	Furnish & install 30" manufactured restrained joints	EA
3033	Furnish & install 36" manufactured restrained joints	EA
3034	Furnish & install 42" manufactured restrained joints	EA
3035	Furnish & install 48" manufactured restrained joints	EA
3040	Furnish & install 4" bell or mechanical joint restraints on existing pipe	EA
3041	Furnish & install 6" bell or mechanical joint restraints on existing pipe	EA
3042	Furnish & install 8" bell or mechanical joint restraints on existing pipe	EA
3043	Furnish & install 12" bell or mechanical joint restraint on existing pipe	EA
3044	Furnish & install 16" bell or mechanical joint restraint on existing pipe	EA
3050	Furnish & install 4" wedge-action, mechanical joint restraints on new PVC pipe	EA
3051	Furnish & install 6" wedge-action, mechanical joint restraints on new PVC pipe	EA
3052	Furnish & install 8" wedge-action, mechanical joint restraints on new PVC pipe	EA
3053	Furnish & install 12" wedge-action, mechanical joint restraints on new PVC pipe	EA
3070	Furnish 4-inch push-on restraint gaskets	EA
3071	Furnish 6-inch push-on restraint gaskets	EA
3072	Furnish 8-inch push-on restraint gaskets	EA
3073	Furnish 12-inch push-on restraint gaskets	EA
3074	Furnish 16-inch push-on restraint gaskets	EA
3075	Furnish 20-inch push-on restraint gaskets	EA
3076	Furnish 24-inch push-on restraint gaskets	EA
3077	Furnish 30-inch push-on restraint gaskets	EA
3078	Furnish 36-inch push-on restraint gaskets	EA

C4.00 Fittings

The Contractor shall provide all labor and equipment to completely install plugs, caps, bends, sleeves, reducers, tees, crosses, and offsets. The installation of ductile iron fittings shall include, but not be limited to:

1. Excavating the trench;
2. Maintaining the trench which shall include dewatering and bracing and sheeting where required or as directed by the Engineer;
3. Furnishing and installing the appropriate fitting;
4. For HDPE pipe, furnishing and installing the appropriate HDPE mechanical joint adapters and back-up rings or mechanical joint glands;
5. Backfilling and compacting the trench;
6. Cleaning up and restoring the job site which shall include re-grading the terrain; and
7. Removing and legally disposing of all waste materials.

Additional compensation shall not be made for restraining devices used in conjunction with hydrant installations. Payment will be made for the number of each size and type of fittings installed and incorporated into the piping system complete, working, and operating to the satisfaction of the Engineer.

Payment shall be made under:

Item No.	Description	Unit
4000	Furnish and install 4" plug or cap w/ DIP, CIP or PVCP	EA
4001	Furnish and install 4" bend, offset, sleeve or reducer w/ DIP, CIP or PVCP	EA
4002	Furnish and install 4" tee w/ DIP, CIP or PVCP	EA
4003	Furnish and install 4" cross w/ DIP, CIP or PVCP	EA
4004	Furnish and install 6" plug or cap w/ DIP, CIP or PVCP	EA
4005	Furnish and install 6" bend, offset, sleeve or reducer w/ DIP, CIP or PVCP	EA
4006	Furnish and install 6" tee w/ DIP, CIP or PVCP	EA
4007	Furnish and install 6" cross w/ DIP, CIP or PVCP	EA
4008	Furnish and install 8" plug or cap w/ DIP, CIP or PVCP	EA
4009	Furnish and install 8" bend, offset, sleeve or reducer w/ DIP, CIP or PVCP	EA
4010	Furnish and install 8" tee w/ DIP, CIP or PVCP	EA
4011	Furnish and install 8" cross w/ DIP, CIP or PVCP	EA
4012	Furnish and install 12" plug or cap w/ DIP or CIP	EA
4013	Furnish and install 12" bend, offset, sleeve or reducer w/ DIP or CIP	EA
4014	Furnish and install 12" tee w/ DIP or CIP	EA
4015	Furnish and install 12" cross w/ DIP or CIP	EA
4016	Furnish and install 16" plug or cap w/ DIP or CIP	EA

4017	Furnish and install 16" bend, offset, sleeve or reducer w/ DIP or CIP	EA
4018	Furnish and install 16" tee w/ DIP or CIP	EA
4019	Furnish and install 16" cross w/ DIP or CIP	EA
4020	Furnish and install 20" plug or cap w/ DIP or CIP	EA
4021	Furnish and install 20" bend, offset, sleeve or reducer w/ DIP or CI	EA
4022	Furnish and install 20" tee w/ DIP or CIP	EA
4023	Furnish and install 20" cross w/ DIP or CIP	EA
4024	Furnish and install 24" plug or cap w/ DIP or CIP	EA
4025	Furnish and install 24" bend, offset, sleeve or reducer w/ DIP or CIP	EA
4026	Furnish and install 24" tee w/ DIP or CIP	EA
4027	Furnish and install 24" cross w/ DIP or CIP	EA
4028	Furnish and install 30" plug or cap w/ DIP or CIP	EA
4029	Furnish and install 30" bend, offset, sleeve or reducer w/ DIP or CIP	EA
4030	Furnish and install 30" tee w/ DIP or CIP	EA
4031	Furnish and install 30" cross w/ DIP or CIP	EA
4032	Furnish and install 36" plug or cap w/ DIP or CIP	EA
4033	Furnish and install 36" bend, offset, sleeve or reducer w/ DIP or CIP	EA
4034	Furnish and install 36" tee w/ DIP or CIP	EA
4035	Furnish and install 36" cross w/ DIP or CIP	EA
4036	Furnish and install 42" plug or cap w/ DIP or CIP	EA
4037	Furnish and install 42" bend, offset, sleeve or reducer w/ DIP or CIP	EA
4038	Furnish and install 42" tee w/ DIP or CIP	EA
4039	Furnish and install 42" cross w/ DIP or CIP	EA
4040	Furnish and install 48" bend, offset, sleeve or reducer w/ DIP or CIP	EA
4041	Furnish and install 48" tee w/ DIP or CIP	EA
4050	Furnish and install 4" plug or cap w/ HDPEP	EA
4051	Furnish and install 4" bend, offset, sleeve or reducer w/ HDPEP	EA
4052	Furnish and install 4" tee w/ HDPEP	EA
4053	Furnish and install 4" cross w/ HDPEP	EA
4054	Furnish and install 6" plug or cap w/ HDPEP	EA
4055	Furnish and install 6" bend, offset, sleeve or reducer w/ HDPEP	EA
4056	Furnish and install 6" tee w/ HDPEP	EA
4057	Furnish and install 6" cross w/ HDPEP	EA
4058	Furnish and install 8" plug or cap w/ HDPEP	EA
4059	Furnish and install 8" bend, offset, sleeve or reducer w/ HDPEP	EA
4060	Furnish and install 8" tee w/ HDPEP	EA
4061	Furnish and install 8" cross w/ HDPEP	EA
4062	Furnish and install 10" bend, offset, sleeve or reducer w/ HDPEP	EA
4063	Furnish and install 12" plug or cap w/ HDPEP	EA
4064	Furnish and install 12" bend, offset, sleeve or reducer w/ HDPEP	EA
4065	Furnish and install 12" tee w/ HDPEP	EA
4066	Furnish and install 12" cross w/ HDPEP	EA

4067 Furnish and install 14" bend, offset, sleeve or reducer w/ HDPEP EA

C5.00 Fire Hydrants

The Contractor shall provide all labor, equipment and specified materials to completely furnish and/or install full and complete fire hydrant assemblies on new and existing water mains as shown on the construction plans or as directed by the Engineer.

The “hydrant assembly” to be furnished is 10 LF or less of 6” DIP, hydrant elbow, and hydrant barrel extension and hydrant barrel as shown in Standard Detail 4.01.

Hydrant assembly installation shall include, but may not be limited to:

1. Excavation of hydrant assembly trench;
2. Maintaining the trench that shall include dewatering, bracing and sheeting where required or as directed by the Engineer;
3. Anchoring the hydrant to existing or new main;
4. Furnishing and installing of up to and including ten (10) feet of 6-inch ductile iron pipe;
5. Removing any plugs, caps, restraining devices, etc. from existing water mains;
6. Furnishing and installing all mechanical thrust restraint beginning at the hydrant valve as required in the Technical Specifications or as directed by the Engineer;
7. Furnish and installing polyethylene encasement for all underground pipe and fittings;
8. Furnish and install hydrant in the plumb position with 4.5’clearance in the back and 7’ clearance in the front and on each side from walls, poles and obstructions;
9. Furnishing and installing a concrete thrust collar around the barrel of the hydrant and 12” below grade as shown in standard detail 4.01;
10. Furnishing and installing of a concrete "support block" under each hydrant;
11. Furnishing and installing of a concrete support cradle under each hydrant tee on PVC mains;
12. Backfilling and compacting hydrant assembly trench;
13. Furnish high grade enamel OSHA yellow paint and paint hydrant barrel as required in the Technical Specifications;
14. Furnishing high grade enamel OSHA green paint and paint the hydrant bonnet;
15. Furnishing and installing one blue, reflective pavement marker (RPM) in the street adjacent to the hydrant at a location to be determined by the Engineer. The RPM shall meet or exceed all provisions of the Florida Department of Transportation, Standard Specifications for Road and Bridge Construction, Section 706;
16. Pressure testing the hydrant assembly in conformance with these documents;
17. Backfilling and compacting the trench;
18. Cleaning up and restoring the job site which shall include re-grading the terrain; and
19. Removing and legally disposing of all waste materials.

The Contractor shall do all things necessary to completely install a fire hydrant assembly in

accordance with the Technical Specifications, Standard Details or as directed by the Engineer. Payment will be based on the number of hydrant assemblies incorporated into the pipeline system complete and working to the satisfaction of the Engineer. Payment for tees, valves, taps, fittings, and restoration will be made utilizing the appropriate contract bid item. Separate payment will be made for any 6-inch ductile iron pipe in excess of 10 feet connecting the hydrant gate valve to the hydrant.

In addition, it will be the Contractor's responsibility to determine the correct size (bury depth) of each hydrant installed so that the requirements of the Technical Specifications are satisfied. Any hydrant not installed to the proper grade shall be replaced with one of the correct size by the Contractor at his expense prior to final approval and acceptance.

Fittings required because of contractor convenience, (i.e. installed because the contractor elected to install a shallow bury hydrant) shall be furnished and installed at the contractor's expense.

Payment shall be made under:

Item No.	Description	Unit
5000	Furnish and install full fire hydrant assembly on new or existing mains	EA

C5.10 Protection Post

The Contractor shall provide all labor, equipment, and material for furnishing and installing protection posts as part of the hydrant, meter or fire line installation as shown on the Plans or as directed by the Engineer. Hydrant protection post installation shall include, but may not be limited to, the following:

1. Excavation of protection post pit;
2. Furnishing and installing of 6" diameter ductile iron protection post in a plumb position with all of the hose nozzles clear of the posts;
3. Furnishing and installing the necessary concrete as called for in the Technical Specifications; and
4. Furnishing OSHA yellow paint and painting protection post
5. Cleaning up and restoring the job site which shall include re-grading the terrain; and
6. Removing and legally disposing of all waste materials.

Payment shall be for each protection post that is installed and accepted by the Engineer.

Payment shall be made under:

Item No.	Description	Unit
5100	Furnish and install protection post	EA

C5.20 Fire Hydrants (Removal of Existing)

The Contractor shall provide all labor, equipment, and material for removal and salvage of each existing fire hydrant assembly on an existing water pipeline. Hydrant removal and salvage includes, but may not be limited to:

1. Excavating the hydrant pit;
2. Furnish and install restraining devices anchoring the hydrant shut off valve to the pipeline tee;
3. Remove hydrant from hydrant lead;
4. Furnish & install thrust block (if required) behind cap or plug;
5. Remove hydrant protection post(s);
6. Backfilling and compacting the hydrant pit;
7. Cleaning up and restoring the job site which shall include re-grading the terrain;
8. Removing and legally disposing of all waste materials;
9. Transporting the removed hydrant without delay to the location designated by the Engineer or legally disposing the hydrant; and
10. Unload the removed hydrant at the designated location.

Contractor shall be paid for each hydrant removed, salvaged, returned or disposed. All hydrants removed shall remain the property of the City unless otherwise directed by the Engineer. If the City opts not to remain the owner, the Contractor shall remove and properly dispose of the hydrant at his expense. The installation of the plug or cap and thrust block if required shall be paid for using the appropriate bid item.

Payment shall be made under:

Item No.	Description	Unit
5200	Remove and salvage hydrant	EA

C6.00 Valves

The Contractor shall provide all labor, equipment and materials to completely furnish and install 2-inch through 16-inch gate valves, 16-inch through 48-inch butterfly valves and 4-inch through 42-inch tapping valves including all accessories and incidentals. The valve installation shall include, but may not be limited to:

1. Excavating the trench;
2. Maintaining the trench that shall include dewatering and bracing and sheeting where required or as directed by the Engineer;
3. Furnish and install a gate valve in a mainline of DIP, CIP or PVCP with a valve box or a tapping valve on a tapping sleeve with a valve box;
4. Furnish and install a gate valve on HDPEP along with all associated HDPE mechanical joint adapters and appurtenances;
5. Backfilling and compacting the trench;
6. Furnishing, forming and pouring a 6-inch thick concrete pad around each valve box installed in non-paved areas;
7. Furnishing paint and painting valve cover;
8. Furnishing and installing or forming and pouring concrete support blocks under valves installed on PVC and HDPE pipeline;
9. Cleaning up and restoring the job site which shall include re-grading the terrain; and
10. Removing and legally disposing of all waste materials.

Payment shall be made for the number of each size valve and valve box installed and incorporated into the piping system complete, working and operating to the satisfaction of the Engineer.

Payment shall be made under:

Item No.	Description	Unit
6000	Furnish and install 2" gate valve and box on DIP, CIP or PVCP	EA
6001	Furnish and install 4" gate or tapping valve and box on DIP, CIP or PVCP	EA
6002	Furnish and install 6" gate or tapping valve and box on DIP, CIP or PVCP	EA
6003	Furnish and install 8" gate or tapping valve and box on DIP, CIP or PVCP	EA
6004	Furnish and install 12" gate or tapping valve and box on DIP or CIP	EA
6005	Furnish and install 16" gate or tapping valve and box on DIP or CIP	EA
6006	Furnish and install 16" butterfly valve and box on DIP or CIP	EA
6007	Furnish and install 20" butterfly valve and box on DIP or CIP	EA
6008	Furnish and install 24" butterfly valve and box on DIP or CIP	EA
6009	Furnish and install 30" butterfly valve and box on DIP or CIP	EA
6010	Furnish and install 36" butterfly valve and box on DIP or CIP	EA
6011	Furnish and install 42" butterfly valve and box on DIP or CIP	EA
6012	Furnish and install 48" butterfly valve and box on DIP or CIP	EA
6070	Furnish and install 2" gate valve and Box on HDPEP	EA
6071	Furnish and install 4" gate valve and box on HDPEP	EA
6072	Furnish and install 6" gate valve and box on HDPEP	EA
6073	Furnish and install 8" gate valve and box on HDPEP	EA
6074	Furnish and install 12" gate valve and box on HDPEP	EA

C6.10 Line Stops

The Contractor shall furnish all labor, equipment, tools and materials to install line stops on existing water mains.

The line stop installation shall include but is not limited to:

1. Excavating the trench;
2. Maintaining the trench that shall include dewatering and bracing and sheeting where required or as directed by the Engineer;
3. Furnishing and installing the line stop;
4. Furnishing and installing polywrap on line stop appurtenances remaining on the pipe after the line stop is removed;
5. Furnishing and installing reverse dead-man restraint with split wedge action restraints as shown in Standard 2.10A.
6. Compacting soil in trench around dead-man and line stop to a minimum 90% modified proctor density;
7. Excavating the trench to remove line stop;
8. Backfilling and compacting the trench;
9. Cleaning up and restoring the job site which shall include re-grading the terrain; and
10. Removing and legally disposing of all waste materials.

Payment shall be made under:

Item No.	Description	Unit
6100	F&I 4” Line Stop on Existing Water Main (0’-5’)	EA
6101	F&I 4” Line Stop on Existing AC Water Main (0’-5’)	EA
6102	F&I 6” Line Stop on Existing Water Main (0’-5’)	EA
6103	F&I 6” Line Stop on Existing AC Water Main (0’-5’)	EA
6104	F&I 8” Line Stop on Existing Water Main (0’-5’)	EA
6105	F&I 8” Line Stop on Existing AC Water Main (0’-5’)	EA
6106	F&I 10” Line Stop on Existing Water Main (0’-5’)	EA
6107	F&I 10” Line Stop on Existing AC Water Main (0’-5’)	EA
6108	F&I 12” Line Stop on Existing Water Main (0’-5’)	EA
6109	F&I 12” Line Stop on Existing AC Water Main (0’-5’)	EA
6110	F&I 16” Line Stop on Existing Water Main (+5’)	EA
6111	F&I 24” Line Stop on Existing Water Main (+5’)	EA
6112	F&I 30” Line Stop on Existing Water Main (+5’)	EA
6113	F&I 36” Line Stop on Existing Water Main (+5’)	EA

Payment for reverse dead-man restraints shall be paid for under the appropriate items for split wedge action restraints and poured concrete thrust blocking. Restoration items shall be paid for under the appropriate item as needed.

C6.20 Insertion Valves

The Contractor shall furnish all labor, equipment, tools and materials to install insertion valves on existing water mains that are under pressure

Insertion valve installation shall include but is not limited to:

1. Excavating the trench;
2. Maintaining the trench that shall include dewater and bracing and sheeting where required or as directed by the Engineer;
4. Cleaning the pipe;
5. Furnishing and installing the appropriate insertion valve;
6. Furnishing and installing polywrap on valve and pipe;
7. Backfilling and compacting the trench;
8. Cleaning up and restoring the job site which shall include re-grading the terrain; and
9. Removing and legally disposing of all waste materials.

Payment shall be made under:

Item No.	Description	Unit
6200	F&I 4” insertion valve on Existing DIP-CIP-PVC Water Main	EA
6202	F&I 4” TEAM insertion valve on Existing Water Main	EA
6203	F&I 6” insertion valve on Existing DIP-CIP-PVC Water Main	EA
6205	F&I 6” TEAM insertion valve on Existing Water Main	EA
6206	F&I 8” insertion valve on Existing DIP-CIP-PVC Water Main	EA
6208	F&I 8” TEAM insertion valve on Existing Water Main	EA
6209	F&I 12” insertion valve on Existing DIP-CIP-PVC Water Main	EA
6211	F&I 12” TEAM insertion valve on Existing Water Main	EA
6212	F&I 16” insertion valve on Existing Water Main	EA

Restoration will be paid for under the appropriate restoration pay item.

C7.00 Taps

The Contractor shall provide all labor and equipment for installing tapping sleeves and making the appropriate **full port** tap complete and operable. The tapping sleeve installation shall include:

1. Excavating the trench;
2. Maintaining the trench that shall include dewatering and bracing and sheeting where required or as directed by the Engineer;
3. Furnishing and installing the tapping sleeve;
4. Pressure testing the tapping sleeve and valve;
5. Making the full port tap, up to and including 42";
6. Furnishing and installing mechanical joint tapping sleeves for size on size pipe taps or as directed by the engineer;
7. Furnishing, installing and sealing the tapping sleeve with blue polyethylene encasement of not less than 8 mils thick;
8. Backfilling and compacting the trench;
9. Cleaning up and restoring the job site which shall include re-grading the terrain; and
10. Removing and legally disposing of all waste materials.

Payment shall be based on the number and size of tapping sleeves installed and incorporated into the piping system complete, working and operating to the satisfaction of the Engineer. Valves and valve boxes shall be paid for by the appropriate pay item.

Payment shall be made under:

Item No.	Description	Unit
7000	Furnish and install 4" tapping sleeve and tap	EA
7001	Furnish and install 6" tapping sleeve and tap	EA
7002	Furnish and install 8" tapping sleeve and tap	EA
7003	Furnish and install 12" tapping sleeve and tap	EA
7004	Furnish and install 16" tapping sleeve and tap	EA
7005	Furnish and install 20" tapping sleeve and tap	EA
7006	Furnish and install 24" tapping sleeve and tap	EA
7007	Furnish and install 30" tapping sleeve and tap	EA
7008	Furnish and install 36" tapping sleeve and tap	EA
7009	Furnish and install 42" tapping sleeve and tap	EA
7010	Furnish and install 48" tapping sleeve and tap	EA

C8.00 Water Meter And Fire Line Service Installation

C8.10 Metered Services Two-Inch and Less with Pipe Work

The Contractor shall provide all labor, materials and equipment for the installation and/or transfer of 3/4" (single or dual service), 1", 1½", and 2" meters and 2" double detector check valves, as specified, and issued in conjunction with a pipeline project.

Meter service lengths (as described in the pay items) are defined as follows:

- 0-15' service line required from main to meter is up to 15' long
- +15-80' service line required is greater than 15', up to and including 80'
- +80-150' service line required is greater than 80', up to and including 150'

All water meters and double detector check valve assemblies will be furnished by the.

Meter service installation shall include, but may not be limited to:

1. Excavating and maintaining the trench;
2. Making the appropriate size tap;
3. When directed by the Engineer or as indicated in the standard details, furnish and install an appropriately sized steel, PVC or HDPE sleeve under paved areas for long-side meter service by open cut, horizontal directional drilling/directional bore or "moling" as directed by the Engineer or as indicated in the standard details;
4. For use on DIP, CIP or PVC, furnish and install the appropriate size and type of corporation stop, high density polyethylene, PVC pipe, any required service fittings, curb stop, meter box, and tail piece extension as designated by the Tampa Water Department's Technical Specifications. For use on HDPE pipe, furnish and install the appropriate size and type of electrofusion tapping tee or electrofusion corporation, HDPE tubing or pipe, any required service fittings, curb stop, meter box and tail piece extension as designated by the Tampa Water Department's Technical Specifications;
5. On all long-side HDPE service lines, furnishing and installing, two continuous 12 gauge wires along the top of the pipe, inside the sleeve. There shall be no dead ends and each locator wire shall be routed from the corporation to the meter box. Connections between wire ends shall be made using an approved connections at each end as shown in the standard details;
6. Installation of the appropriate sized, furnished, meter or transferring an existing meter to the new service line;
7. Relocating existing meters and/or adjusting existing meters to grade;
8. Backfilling and compacting of all excavations;
9. Clean-up and return the job site to its original condition which includes but is not limited to restoring the elevation of surface to its original grade;
10. Removing and legally disposing of all waste materials.

Payment shall be made for each meter service furnished and installed, and accepted by the Engineer.

Any restoration required shall be compensated in accordance with the restoration pay items in the Contract.

Payment shall be made under:

Item No.	Description for Services on PVCP, DIP, OR CIP	Unit
8100	Furnish, tap, & install 3/4" or 1" meter service (0-15', HDPE)	EA
8101	Furnish, tap, & install 3/4" meter service (+15-80', HDPE)	EA
8102	Furnish, tap, & install 3/4" meter service (+80-150', HDPE)	EA
8103	Furnish, tap, & install 3/4" Dual meter service (0-15', HDPE)	EA
8104	Furnish, tap, & install 3/4" Dual or 1" Dual meter service (+15-80', HDPE)	EA
8105	Furnish, tap, & install 3/4" Dual meter service (+80-150', HDPE)	EA
8106	Furnish, tap, & install 1" Dual meter service (0-15', HDPE)	EA
8107	Furnish, tap, & install 1" or 1-1/2" meter service (+15-80', HDPE)	EA
8108	Furnish, tap, & install 1" or 1-1/2" meter service (+80-150', HDPE)	EA
8109	Furnish, tap, & install 1 1/2" or 2" meter service (0-15', HDPE)	EA
8110	Furnish, tap, & install 2" DDCV & service (0-15', HDPE)	EA

Item No.	Description for Services on HDPEP	Unit
8120	Furnish, tap, & install 3/4" or 1" meter service (0-15', HDPE)	EA
8121	Furnish, tap, & install 3/4" meter service (+15-80', HDPE)	EA
8122	Furnish, tap, & install 3/4" meter service (+80-150', HDPE)	EA
8123	Furnish, tap, & install 3/4" Dual meter service (0-15', HDPE)	EA
8124	Furnish, tap, & install 3/4" Dual or 1" Dual meter service (+15-80', HDPE)	EA
8125	Furnish, tap, & install 3/4" Dual meter service (+80-150', HDPE)	EA
8126	Furnish, tap, & install 1" Dual meter service (0-15', HDPE)	EA
8127	Furnish, tap, & install 1" or 1-1/2" meter service (+15-80', HDPE)	EA
8128	Furnish, tap, & install 1" or 1-1/2" meter service (+80-150', HDPE)	EA
8129	Furnish, tap, & install 1 1/2" or 2" meter service (0-15', HDPE)	EA
8130	Furnish, tap, & install 2" DDCV & service (0-15', HDPE)	EA

C8.20 Raising Existing Meters in Existing Meter Boxes

The Contractor shall provide all labor, materials and equipment necessary to raise existing 3/4", 1", 1½", and 2" meters in existing meter boxes when shown on the plans or directed by the Engineer. When transferring existing meters to a newly constructed water mains, any meters found too low in their boxes shall be raised such that the meter body is fully within (and not below) the box (see Water Department Standard Details 5.03, 5.04, and 5.05 for typical layout), utilizing PVC pipe and fittings necessary to accomplish the adjustment. Brass meter resetters shall not be used.

The Contractor shall make the appropriate connections from PVC installed to existing PVC, copper, or galvanized piping upstream and downstream of the meter, depending on the type of existing in-place service line.

All PVC pipe shall be Schedule 80 manufactured from a Type 1 Grade 1 Polyvinyl Chloride (PVC) compound with a cell classification of 12454 per ASTN D1784. The pipe shall be manufactured in strict compliance with ASTM D1785 in the USA, and shall be NSF approved for potable water applications. PVC fittings shall be solvent welded to the PVC pipe – connection to existing pipe shall be appropriate to accommodate the existing type of service line, subject to approval of the Engineer.

Raising Existing Meters shall include, but may not be limited to:

1. Excavating to access the service line at the meter box;
2. Cutting into the existing service line for connections;
3. Fabricating and installing PVC pipe assembly and fittings required to raise the meter;
4. Backfilling and compacting any excavated soils;
5. Cleaning up and restoring the job site to its original condition; and
6. Removing and legally disposing of all waste materials.

Payment shall be made for each meter service furnished and installed, and accepted by the Engineer.

Payment shall be made under:

Item No.	Description	Unit
8200	Raise 3/4" meter	EA
8201	Raise 1" meter	EA
8202	Raise 1-1/2” meter	EA
8203	Raise 2" meter	EA

C8.30 Service Installations 3-inch and Larger

The Contractor shall provide for all the labor, equipment and materials for installing 3-inch and larger meters and/or installing double detector check valve assemblies into a large service. The large service installation may be located in an above-ground vault, below-ground vault, or may be an above-ground installation in accordance with the construction plans or as directed by the Engineer. The large service installation shall include, but is not limited to:

1. Obtaining from the Tampa Water Department, Rome Avenue Warehouse, a large meter assembly and/or double detector check valve assembly as directed by the Engineer or

as shown the plans;

2. Installing a-furnished double detector check valve assembly including the detector check bypass metered assembly;
3. Excavating and maintaining the trench;
4. Installing the-furnished, large meter including furnishing and installing a 2-inch large meter by-pass assembly the-furnished by-pass meter; and
5. Furnishing and installing bolts, nuts, gaskets and all appurtenances necessary to install the either the large meter or double detector check valve assembly;
6 Backfilling and compacting the trench;
7 Cleaning up and restoring the job site which shall include re-grading the terrain; and
8. Removing and legally disposing of all waste materials.

The Department shall provide the appropriate size meter and by-pass meter for all large meter services or appropriate size double detector check valve assembly. The Contractor shall furnish and install all bolts, nuts, gaskets, by-pass piping (large meter only) and appurtenances necessary to install a large meter or double detector check valve assembly.

Payment will be made for each large meter service installed or double detector check valve assembly installed, and accepted by the Engineer.

Payment shall be made under:

Item No.	Description	Unit
8300	Install 3" meter	EA
8301	Install 4" meter	EA
8302	Install 6" meter	EA
8303	Install 8" meter	EA
8320	Install 4" double detector check valve assembly	EA
8321	Install 6" double detector check valve assembly	EA
8322	Install 8" double detector check valve assembly	EA
8323	Install 10" double detector check valve assembly	EA
8324	Install 12" double detector check valve assembly	EA

C8.40 Vaults and Auxiliary Above-Ground Materials

The Contractor shall provide for all labor, equipment, and materials for furnishing and installing an above-ground vault or below-ground vault and all auxiliary materials for an above-ground large service.

The vault and auxiliary materials shall include, but may not be limited to:

1. Excavating the trench;
2. Maintaining the excavations that shall include dewatering, sheeting and bracing where required or as directed by the Engineer;
3. Furnishing, installing, and constructing an above-ground vault per Standard Details 6.09 and 6.10 or below-ground vault incorporating e or more large service installation within the construction;
4. Furnishing and installing a 6-inch concrete slab, reinforcing steel and pipe supports incorporating e or more free-standing above-ground large services within the construction;
5. Backfilling and compacting the excavation;
6. Furnishing paint and painting the above-ground large service installation and;
7. Sealing top of vault to sides of vault with an approved material;
8. Cleaning up and restoring the job site which shall include re-grading the terrain; and
9. Removing and legally disposing of all waste materials.

The Contractor shall furnish and install the appropriate size pre-cast traffic bearing vault top and bottom slabs to constructin a large service vault. If the Engineer determines that either part or all of any vault or other structure requires pouring concrete in place (including reinforcing steel), then the Contractor shall pour a slab at no additional cost to the.

The Contractor shall furnish all other material to construction a large service vault.

Vaults shall be of various sizes. Payment shall be made for each vault installed and accepted by the Engineer.

Each above-ground assembly installed and accepted by the Engineer will be paid at the applicable line item. The pay item for furnishing and installing auxiliary materials shall include but not necessarily be limited to painting all above-ground facilities, furnishing and installing all required flanged bolt sets, furnishing and installing pipe supports for large meters and/or DDCVs and furnishing and installing the concrete pad as shown in the details.

Payment shall be made under:

Item No.	Description	Unit
8400	Furnish and install 6'0" x 6'0" above-ground vault or below-ground vault	EA
8401	Furnish and install 8'0" x 5'4" above-ground vault or below-ground vault	EA
8402	Furnish and install 9'4" x 8'0" above-ground vault or below-ground vault	EA
8403	Furnish and install 10'8" x 8'0" above-ground vault or below-ground vault	EA
8404	Furnish and install auxiliary materials for above-ground large service w 12’ X 5’ concrete slab	EA
8405	Furnish and install auxiliary materials for above-ground large service w	

12’ X 9’ concrete slab EA

C9.00 Restoration And Miscellaneous Incidental Items

C9.10 General

The Contractor shall furnish all labor, equipment, and materials to restore the construction area to an equal or better condition than that which existed prior to construction.

The Contractor shall not be compensated for restoration outside of the maximum pay limits that are defined as:

Maximum pay limits = Nominal Pipe Diameter (D) + 1 foot + 2 times the depth of cover (for mains in trenches 0-5' deep).

or = D + 3 times the depth of cover (for mains in trenches greater than 5' deep)

If an area greater than the maximum pay limit is disturbed during construction, the Contractor shall restore the disturbed area outside pay limits to a condition which is equal to or better than the original without additional compensation. The only exception to this shall involve milling and overlaying operations. The Contractor shall mill and overlay to those limits as directed by the Engineer and shall be compensated in conformance with the appropriate pay items for actual quantities furnished and installed.

As stated previously, up final payment by the Department, the Contractor shall maintain the surface of the unpaved trenches, shrubbery, trees, fences, sod, and other surfaces disturbed for a period of 6 months thereafter and shall maintain the repaved areas, curbs, gutters, and sidewalks, if replaced by the Contractor for e year after final acceptance of the respective item. The cost of maintaining the restored areas shall be incidental to the cost of restoring the areas disturbed by the Contractor. These costs shall be prorated and included in the cost for the respective contract pay item.

C9.20 Pavement

The Contractor shall provide all labor, equipment and materials to remove and restore pavement and pavement bases that were cut and removed during the course of the pipeline construction. Pavement and pavement base restoration shall include roadways, driveways, parking lots, etc. Under this section, payment shall be made for:

1. Furnishing, placing, grading, and compacting approved lime rock base;
2. Furnishing, placing, grading, and compacting approved crushed concrete base;
3. Furnishing, placing, grading, and compacting approved asphalt base course, ABC-3 or

Superpave Type B-12.5;

4. Furnishing, placing, grading and compacting approved "Type S-1"or "Superpave Type SP-12.5” asphaltic concrete surface course;
5. Furnishing, placing, grading and compacting to full depth approved "Type S-1" or "Superpave Type SP-12.5" asphaltic concrete surface course;
6. Restoring 6" thick concrete driveway;
7. Furnishing and installing brick pavement;
8. Installing brick pavement;
9. Furnishing and installing Thermo Striping;
10. Furnishing, placing, and grading Type S-III or Superpave "Type SP-9.5" asphaltic concrete overlay;
11. Mechanical milling of 1-inch of existing asphalt including proper disposal of the milled material;
12. Mobilization required for mechanical milling operations;
13. Furnishing and installing traffic loops as specified and directed by the Engineer;
14 Furnishing and installing signalization loops as specified and directed by the Engineer;
15. Furnishing Traffic Control Officer (Off-Duty Law Enforcement);
16. Furnishing and installing work zone signs;
17. Furnishing and installing traffic control devices to right-of-way permit requirements;
18. Removing, transporting and disposing of pavement, concrete curb, asphaltic curb and other items removed during construction;
19. Cleaning up and restoring the job site which shall include re-grading the terrain; and
20. Removing and legally disposing of all waste materials.

All surface restoration shall be as directed by the Engineer or the regulatory agency having jurisdiction over the roadway. All areas requiring pavement restoration shall be saw cut prior to construction pavement removal. The costs to mechanically saw cut pavement joints are considered incidental to pavement restoration and should be included in the cost.

Asphalt shall be measured for payment based the number of tons of asphalt furnished and installed. All pavement, concrete curb, asphaltic concrete curb or other items removed during the course of pipeline construction shall be disposed of by the Contractor in a manner satisfactory to the Department. The cost of removal and disposal associated with all items shall be included in the assigned restoration item.

City street pavement shall be in accordance with of Tampa’s PAVEMENT/RIGHT OF WAY RESTORATI REQUIREMENTS – REV-2009 guidelines. See Technical specification T4.07.

Bricks shall be replaced in accordance with the of Tampa’s Vitrified Brick Replacement (Revised 4/27/2009 guidelines. See Technical Specifications T4.08.

Mobilization shall only be paid for milling operations and shall only be paid once per job site

unless otherwise approved in advance by the Engineer. Milling shall be made in thickness increments of one inch and shall include proper disposal of the milled material.

The Contractor shall furnish all labor, materials and equipment, necessary to replace and maintain complete the traffic signalization loops as specified and directed by the Engineer. The work includes all saw-cutting of pavement, placement of loop wires and lead-in cables, non-metallic wire hold downs, wire identification tags and sealants, splicing and termination strips, testing and all other work incidental to the installation of a signalization loop complete in place. All signalization loops shall conform to the requirements of the latest edition of the Florida Department of Transportation Standard Specifications for Road and Bridge Construction. Payment for traffic signalization loops will be made at the appropriate contract item unit price per signalization loop installed.

The Contractor shall be compensated for any thermoplastic striping required based on the striping sub-contractor’s invoice for work done for a given work order, plus 10% OH&P.

The Contractor shall be compensated for any maintenance of traffic required for a given work order based on the MOT sub-contractor’s invoice for a given work order (corroborated by count records the Contractor shall provide to the Engineer daily) plus 10% OH&P.

Asphalt restoration quantities shall be paid per square-yard per inch.

Payment shall be made under:

Item No.	Description	Unit
9200	Furnish, place, and compact lime rock base	CY
9201	Furnish, place, and compact crushed concrete base	CY
9203	Furnish, place, and compact Superpave Type B-12.5 asphalt base course	SY-IN
9204	Furnish and install asphalt concrete surface Type S-1	SY-IN
9205	Furnish and install asphalt concrete surface Superpave Type SP-12.5	SY-IN
9206	Furnish, place and grade Type S-III asphaltic concrete overlay	SY-IN
9207	Furnish, place and grade Superpave Type SP-9.5 asphaltic concrete overlay	SY-IN
9208	Mobilization to perform milling operations	EA
9209	Mechanical milling of asphalt roadways in 1-inch increments	SY-IN
9210	Furnish and install 6" thick concrete driveway	SY
9211	Furnish and install brick pavement	SY
9212	Install brick pavement	SY
9213	Furnish and install signalization loops	EA
9214	Furnish Traffic Control Officer (Off-Duty Law Enforcement)	MH
9215	Furnish and install Work Zone Signs	ED
9216	Furnish and install Business Signs	ED

9217	Furnish and install Barricades (Temporary – Type II)	ED
9218	Furnish and install Barricades (Temporary Type III) (6”)	ED
9219	Furnish and install Advance Warning Arrow Panel	ED
9220	Furnish and install High Intensity Flashing Lights (Temporary-Type B)	ED
9221	Furnish and install Variable Message Sign (Temporary)	ED

C9.30 Roadside Restoration

The Contractor shall provide for all labor, equipment and materials to restore the roadside areas disturbed during the course of the pipeline construction. Under this section, payment shall be made for:

1. Restoring typical concrete curb and gutter including stabilization of sub-base and installation of curb pads;
2. Restoring stone or pre-cast curb;
3. Furnishing and placing asphaltic concrete curb;
4. Remove and restoring 4-inch thick concrete sidewalk, including applicable sidewalk ramps;
5. Restoring concrete hexagon block sidewalk;
6. Restoring the roadside areas with approved sod. Restoring the roadside area and ditch bottoms and sides with sod shall include furnishing, grading, and placing the sod; and
7. Restoring the roadside areas with approved sprig and seed. Restoring the roadside area with sprig and seed shall include furnishing, grading, placing, fertilizing, mulching, sprigging and seeding.
8. Furnishing and installing detectable warnings walking surfaces as directed by Engineer. The detectable warning surface will conform to the Florida Department of Transportation Standard Specifications for Road and Bridge Construction, current edition. The detectable warnings shall be installed in conformance with FDOT Standard Indexes 304 and 310 or in conformance with the requirements of the right-of-way regulatory agency with responsibility of the affected right-of-way. (Payment for curb and sidewalk associated with pedestrian access ramps will be made under the appropriate sidewalk and curb pay items.)
9. Cleaning up and restoring the job site which shall include re-grading the terrain; and
10. Removing and legally disposing of all waste materials.

Sidewalk and curb replacement pay quantities shall have maximum limits as specified in these documents, as shown the plans or as directed by the Engineer. All linear foot units shall be measured along the curb line. In all cases, the sod or seed placed is to conform in kind to the existing at the particular location.

Permanent fence agreed to be removed or disturbed for water or stormwater main construction shall be replaced in-kind, to match existing, subsequent to construction. Fence restoration shall

be coordinated with the property owner and the City, and shall be to the satisfaction of the Engineer. Compensation for permanent fence restoration shall be based on the fencing sub-contractor’s invoice plus 15% OH&P; or if restoration is executed by Contractor, in accordance with Specific Provision 4.05.

Payment shall be made under:

Item No.	Description	Unit
9300	Furnish and install Type “D” concrete curb	LF
9301	Furnish and install valley curb	LF
9302	Furnish and install Miami curb	LF
9303	Furnish and install Type “F” concrete curb	LF
9304	Furnish and install stone or precast curb	LF
9305	Remove and install existing stone curb	LF
9306	Furnish and install asphaltic concrete curb	LF
9307	Furnish and install 4" thick concrete sidewalk	SY
9308	Furnish and install hexagon block sidewalk	SY
9309	Grade and sod roadside, ditch bottoms and sides - Bahia	SY
9310	Grade and sod roadside, ditch bottoms and sides – St. Augustine	SY
9311	Grade, fertilize, sprig, and hydro-seed roadside	SY
9312	Furnish and install detectable warnings sidewalk disability ramps	EA

C9.40 Grouting Abandoned Pipe

The Contractor shall provide all labor and material necessary to grout abandoned pipes in place including but not limited to taps, caps, plugs, pipes, valves and fittings necessary to complete the work in a manner acceptable to the Engineer. Under this section, payment shall be made for:

1. Excavating the trench;
2. Maintain the trench;
3. Furnishing and installing the appropriate fittings necessary to inject and blow-off the grout in a manner acceptable to the Engineer;
4. Completely filling the designated pipe with an approved grout material;
5. Removing injection and blow-off pipes and fitting and plugging tapped plugs and caps;
6. Removing excess concrete from the trench; and
7. Backfilling and compacting the trench.
8. Cleaning up and restoring the job site which shall include re-grading the terrain; and
9. Removing and legally disposing of all waste materials.

Restoration shall be paid separately under the appropriate pay item.

Payment shall be made under:

Item No.	Description	Unit
9400	Grout abandoned pipe	CY

C9.50 Incidentals

The Contractor shall provide all labor, equipment and material for reinforced concrete construction and repairs, replacement of various sizes of vitrified clay sanitary sewer pipes, and repair of sanitary laterals hit but that were improperly marked (“improperly”, as defined in the SSOCOF “Damage Prevention Guide” and Chapter 556, F.S. See Specific Provision S-20.01.).

Reinforced concrete construction can include concrete pads, concrete vault walls, ditch pavement, headwalls, manholes, inlets, shocks pads, concrete "dead-man" restraints, etc.

The Contractor shall provide all labor, equipment and materials for professional quality video photography documentation of the precstruction site condition along the proposed pipeline route.

Under this section, payment shall be made for:

1. Furnishing, forming and placing 3,000 psi concrete with reinforcement as required;
2. Furnishing and replacement of standard sand cement rip-rap in reinforced cloth or paper bags; and
3. Restoring sanitary sewer service lines (laterals) by furnishing and installing the necessary C-900, DR 18 green PVC pipe and flexible couplings, in accordance with City Wastewater Department requirements <Pay Item No. 9504>;
4. Replace or restore 4”, 6”, 8” or 10” vitrified clay sanitary sewer pipes (sewer main lines - not laterals) found parallel with and too close to proposed water mains to avoid being compromised by the water construction, with C-900, DR 18 green PVC pipe and flexible couplings, in accordance with City Wastewater Department requirements <Pay Item No. 9502 and 9503>
4. Furnishing professional quality video photography of pre-construction site conditions along proposed pipeline route as specified in these contract documents and as required.
5. Backfilling and compacting the excavation;
6. Cleaning up and restoring the job site which shall include re-grading the terrain; and
7. Removing and legally disposing of all waste materials.

Payment shall be made under:

Item No.	Description	Unit
9500	Furnish, form, place reinforced concrete	CY
9501	Restore riprap (rubble)	CY
9502	Replace 4" or 6" VC sanitary sewer pipe with PVC	LF
9503	Replace 8" or 10" VC sanitary sewer pipe with PVC	LF
9504	Replace damaged but not marked sanitary laterals, with PVC	LF
9505	Furnish video photography	LF

C9.60 Removal and Demolition of Large Service Vaults and Concrete Slabs

The Contractor shall provide all labor, materials, equipment and incidentals required to remove and demolish existing large service vaults as shown the plans or as directed by the Engineer.

The removal and demolition of large service vaults shall include, but may not be limited to:

1. Excavating the trench;
2. Removing existing large service fittings, including but not limited to valves, check valves and meters;
3. Demolishing concrete vaults including, cutting and removal of top slabs and manholes, cutting and removal of exterior walls to the elevation described the plans;
4. Demolishing and/or removal of vault bottoms;
5. Demolishing and/or removal of large service concrete slabs;
6. Backfilling and restoring demolished areas;
8. If designated by the engineer, transporting removed large service fittings to a designated location;
4. Backfilling and compacting the excavation;
5. Cleaning up and restoring the job site which shall include re-grading the terrain; and
6. Removing and legally disposing of all waste materials.

Pipe and fittings installed in place of the large service fittings shall be compensated under the appropriate contract pay items. Payment shall be made for each large service vault demolished and accepted by the Engineer. Payment for fill dirt will be made under the appropriate line item.

Payment shall be made under:

Item No.	Description	Unit
9600	Demolish and Remove large service vaults	EA
9601	Demolish and Remove large service concrete slab	EA

C9.70 Rock and Muck Removal

The Contractor shall provide all labor, equipment and materials to remove and replace unsuitable or unstable trench materials with suitable materials. The removal and replacement of trench materials shall include, but may not be limited to:

1. Furnishing all labor, equipment and materials for removing rock, concrete, etc. which cannot be removed with standard trench equipment and methods;
2. Removing rocks and concrete larger than e cubic yard;
3. Removing trench muck or other unsuitable materials encountered within the trench below the pipe invert elevation; and
4. Backfilling and compacting the excavation;
5. Cleaning up and restoring the job site which shall include re-grading the terrain; and
6. Removing and legally disposing of all waste materials.

Payment shall be made for each cubic yard of rock or muck material excavated and removed.

Payment shall be made under:

Item No.	Description	Unit
9700	Excavation and removal of rock	CY
9701	Excavation and removal of muck	CY

C9.80 Tree Removal, Planting and Protection

The Contractor shall provide all labor, equipment, and materials to plant trees, remove or protect trees 5 inches in diameter or greater. The removal of a tree shall include but may not be limited to:

1. Removal of a tree and all roots inside the trench;
2. Removal of all roots outside the trench to 12 inches below finished grade;
3. Removal from the job site and proper disposal of all timber, stumps, roots and any other organic material resulting from tree removal; and
4. Cleaning up and restoring the job site which shall include re-grading the terrain; and
5. Removing and legally disposing of all waste materials.

Tree diameter shall be determined by measuring the circumference of the trunk 4-½ feet above existing ground level and divided by 3.14. Payment shall be made by the tree-inch diameter.

Trees less than 5-inches in diameter will be considered as part of the normal trench excavation and will be prorated and included under the appropriate pipeline installation contract item.

Tree protection shall include, but may not be limited to:

1. Root pruning all tree roots along the tree-ward side of the trench with a clean vertical cut as shown plans or as indicated by the Engineer.
2. Installing 4-inch to 8-inch pipe under tree root systems by hand excavating, mole excavation or pushing as directed by the Engineer. This shall be considered complete compensation for pipe installation. There will be no additional payment under the standard install pipe item.
3. Furnishing and installing orange fencing for a 1-foot radius around grand oaks in areas where work is being de with heavy equipment;
4. Backfilling and compacting the excavation;
5. Cleaning up and restoring the job site which shall include re-grading the terrain; and
6. Removing and legally disposing of all waste materials.

Tree planting shall include, but may not be limited to:

1. Excavation of the tree pits;
2. Furnishing and installing the required number of 2-inch diameter Oak trees including replacing and compacting backfill as indicated the plans or as directed by the Engineer;
3. Furnishing and installing required fertilizer or chemical required for planting of trees;
4. Backfilling and compacting the excavation;
5. Cleaning up and restoring the job site which shall include re-grading the terrain; and
6. Removing and legally disposing of all waste materials.

Payment shall be made under:

Item No.	Description	Unit
9800	Remove tree 5 inches in diameter and larger	EA
9801	Root prune	LF
9802	Furnish and install 2-inch diameter Oaks	EA

C9.90 Exploratory Pits

The Contractor shall provide all labor, materials and equipment to excavate exploratory pits at locations designated on the plans or as directed by the Engineer **for the sole purpose of locating existing water lines. This item shall not be used to locate utilities other than water lines.** Payment for the location of utilities other than water lines shall be included in other applicable pay items with no separate compensation.

Additional exploratory pits shall only be allowed, when agreed by the Engineer, to locate water main(s) in areas where uncertainty of pipe location is high, or where its location is (or might be)

critical – based on other known utilities in the area. Exploratory pits shall not be allowed at every connection point between existing and new pipe, or at every suspected crossing with another utility, and shall generally be limited to one (1) per 1,000 LF, or per four (4) consecutive blocks, or per three (3) adjacent plan sheets. The excavation of the exploratory pits shall include, but may not be limited to:

1. Excavating the pits;
2. Maintaining the pits that include sheeting and bracing or dewatering as may be required or as directed by the Engineer;
3. Backfilling and compacting the excavation;
4. Cleaning up and restoring the job site which shall include re-grading the terrain; and
5. Removing and legally disposing of all waste materials.

All work shall be for exploratory pits of **various sizes and depths**. The excavating of exploratory pits shall be paid for per each pit excavated, refilled to original grade and accepted by the Engineer.

Payment shall be made under:

Item No.	Description	Unit
9900	Exploratory Pits	EA

C9.91 Valve Box, Vault and Manhole Adjustment or Removal

The Contractor shall provide all labor, equipment, and materials to remove, replace, and/or adjust valve boxes, vaults or manholes. Valve box, vaults, and manhole adjustment shall include, but may not be limited to:

1. Excavating existing valve box, vault or manhole.
2. Determining if existing material is reusable, if not, provide new Water Department approved material;
3. Furnishing and installing the appropriate cast iron riser for valve boxes and manholes;
4. Constructing any traffic bearing structure required to make the adjustment;
5. Setting the valve box, vault or manhole top flush to proposed grade or as directed by the Engineer;
6. Backfilling and compacting the excavation;
7. Cleaning up and restoring the job site which shall include re-grading the terrain; and
8. Removal and disposal of all waste materials.

The valve box, vault or manhole adjustment shall be paid for per each valve box, vault or manhole adjusted and backfilled to meet future grades or as directed by the Engineer.

Conditions of the adjustments to vaults and manholes shall be based the location of the vault whether traffic bearing or not.

Payment shall be made under:

Item No.	Description	Unit
9910	Valve Box Adjustment or Removal	EA
9911	Vault Adjustment	EA
9912	Manhole Adjustment	EA

C9.92 Miscellaneous Incidentals

The Contractor shall provide all labor, equipment and materials for the installation of automatic air release valves and blow-off assemblies.

The work shall include but is not limited to:

1. Furnishing and installing standard blow-off assembly (per Standard Details 2.16 – Blow-off Valve Assembly w/2” PVC or HDPE Pipe, and 2.17 – Blow-off Valve Assembly for ≥4” Mains) with the proper size cap or plug and restraint, a two-inch threaded tap, all brass, HDPE or PVC pipe and fittings necessary to adjust the blow-off assembly to proper grade;
2. Furnishing and installing 2” gate valve and valve box with concrete pad if valve is in dirt;
3. Furnishing and installing a #37 HDPE meter box in conformance with the Standard Detail 5.10;
4. Furnishing and installing complete and functional standard air release valve assembly (ARV);
5. Furnishing and installing Pedlock Fiber Optic Pedestal for ARV, in accordance with the Standard Details 5.14 and 2.15, pipelines of various sizes and depths;
6. Backfilling and compacting the excavation;
7. Cleaning up and restoring the job site which shall include re-grading the terrain; and
8. Removing and legally disposing of all waste materials.

Payment shall be made under:

Item No.	Description	Unit
9920	Furnish and install blow-off assembly w/ valve and meter box per Detail 2.16	EA
9921	Furnish and install blow-off assembly w/ valve and meter box per Detail 2.17	EA
9922	Furnish and install air release valve w/ pedestal	EA

Additional compensation shall be allowed for the appropriate sized cap and restraint required for blow-offs installed per Detail 2.17, in accordance with the applicable Contract Pay Item.

C9.93 Concrete Block Thrust Restraint

The Contractor shall provide for all labor, equipment and materials to completely furnish and install concrete thrust restraint when authorized by the engineer. The installation of the concrete thrust restraint shall include but not be limited to:

1. Excavating the trench;
2. Maintaining the trench that shall include dewatering and bracing and sheeting where required or as directed by the Engineer;
3. Furnishing and installing approved pre-cast thrust blocks;
4. Furnishing, forming, and pouring thrust blocks;
5. Backfilling and compacting the excavation;
6. Cleaning up and restoring the job site which shall include re-grading the terrain; and
7. Removing and legally disposing of all waste materials.

No additional compensation shall be made to the Contractor for field poured concrete in excess of the amount detailed in the Technical Specification or Standard Details without prior approval by the Engineer.

Payment will not be credited for restraining devices installed in conjunction with fire hydrant installations. Installation of thrusting units for fire hydrants is to be included in the price quoted for installation of fire hydrant assemblies.

Payment shall be made under:

Item No.	Description	Unit
9930	Furnish and Install pre-cast thrust blocks	EA
9931	Furnish, form and pour concrete thrust blocks	CY

C9.94 Asbestos Concrete Pipe

The Contractor shall provide all labor, equipment and materials to cut the pipeline and appurtenances (such as valves, fittings, and other materials) as designated the plans or directed by the Engineer. The Contractor shall provide certification that he is properly licensed with all appropriate Federal, State and Local agencies to perform such work. Cutting asbestos concrete pipe shall include, but may not be limited to:

1. Cutting full circle asbestos concrete pipe with required safeguards against airborne

asbestos particles (minimum of 2 cuts);
2. Removal and proper disposal of asbestos concrete pipe;
3. Abandonment of asbestos concrete pipe site, if appropriate;
4. Furnishing and installing grout or cap to plug open ends of buried pipe;
5. When applicable, connecting new pipe to existing asbestos concrete pipe, including furnishing and installing a maximum of two applicable transition couplings as needed to make the connections;
6. Backfilling and compacting the trench including re-grading the terrain;
7. Cleaning up and removing excess water main pipe and appurtenances; and
8. Removal and disposal of all waste materials.

Payment shall be made based the each complete cut into asbestos containing pipe, necessary to replace or remove the pipe. Transition couplings shall be paid for under appropriate fittings item. All appurtenances removed shall remain the property of the of Tampa Water Department except the Asbestos Concrete Pipe that shall be the responsibility of the Contractor to provide for proper disposal or transport and disposal.

Payment shall be made under:

Item No.	Description	Unit
9940	Asbestos Concrete Pipe Complete Cut	EA

C9.95 Project Sign

Project signs shall be furnished for each project as directed by the engineer. The Contractor shall furnish and install a project sign which conforms to the Standard Detail at a location directed by the Engineer at least five (5) working days in advance of the start of construction. The will provide the neighborhood decal. The unit price will include the cost of all labor, equipment and materials to furnish and install a new sign or to re-letter and install a sign previously used elsewhere under this contract. The re-lettering shall involve the project description, total cost, scheduled completion date and supplemental project description. In either case, the price shall also include the cost to remove and properly store or dispose of the sign ce the work has been completed and accepted by the. The area which the sign was placed shall be restored to original condition. This restoration shall be included in the cost of the sign.

The Contractor will furnish and install a new sign for each project or shall re-letter and install a sign used a previous project.

Payment shall be made under:

Item No.	Description	Unit
9950	Furnish and install a new sign as directed by the Engineer	EA
9951	Furnish and install a previously used sign with appropriate re-lettering as directed by the Engineer	EA

C9.96 Separate Mobilization

The City of Tampa will pay a separate mobilization of $2,000.00 for all Major Projects work orders issued with a final constructed cost equal to or less than $5,000. Calculation of the final cost will be based the actual quantities installed in the field and approved for payment by the Engineer.

Payment shall be made under:

Item No.	Description	Unit
9960	Separate Mobilization	EA

C9.97 Supplemental Survey Layout

The of Tampa will permit a supplementary survey layout for all pipelines equal to or greater than 16” in diameter and equal to or greater than 1,000 feet in length. The survey will be performed by Florida Registered Land Surveyor. A copy of the signed and sealed survey layout will be provided to the Engineer as verification of completion. Payment will be based footage aid out, as measured along the centerline of the proposed 16” and larger diameter pipe.

Payment shall be made under:

Item No.	Description	Unit
9970	Supplementary Survey Layout	LF

C9.98 Contingency Allowance

The contingency allowance shall be used by the City of Tampa as directed by the Engineer. Payment shall be made as a lump sum to pay for furnishing and installing items not listed in the Contract. Contractor shall provide an invoice listing the items and quantities along with the lump sum price. The Engineer may request a cost estimate for a contingency item from the Contractor prior to construction.

Payment shall be made under:

Item No.	Description	Unit
9980	Contingency Allowance	LS

C9.99 Crew Day Allowance

Per Specific Provision S10-01, additional compensation will be provided to the Contractor whenever approved and directed nighttime construction work for a given Major Projects work order takes less than 5 consecutive days to complete. This allowance provides the Contractor additional compensation for lost productivity of that crew (or crews) on the day following the nighttime work.

Whenever Engineer approved and directed nighttime work takes less than 5 nights to complete, the Contractor shall be compensated one (1) Crew Day, per crew performing the nighttime work, supplemental to standard Unit Rate compensation provided for construction completed through the Contract.

This allowance does not apply to construction completed through any Minor Projects work orders. As specified in the Minor Projects Contract Pay Item Descriptions, Contractor unit rates offered in the Bid Proposal for Minor Projects work order construction shall include allowance for potential nighttime or weekend work that could be needed to complete those work orders as required.

Payment shall be made under:

Item No.	Description	Unit
9990	Crew Day	ED

C10.00 Performance Bond Allowance

The Performance Bond Allowance shall be paid to the Contractor as a lump sum. Contractor shall provide the performance bond as part of the contract agreement and will be reimbursed with the first work order.

When the cumulative value of the work orders issued exceeds the value of the performance bond held by the City of Tampa, the Contractor shall promptly provide additional performance bond to cover 100% of the cumulative value of the work orders issued under this Contract. Any additional performance bonds required shall be submitted to the Engineer within five business

days of receipt of the written work order. The Engineer shall reimburse the Contractor for the additional performance bond premium through the contingency allowance on the Contractor’s next pay application.

Payment shall be made under:

Item No.	Description	Unit
10000	Performance Bond Allowance	LS

Schedule B: Stormwater Contract Pay Items

C100 Stormwater Contingency

The work covered by this item consists of unforeseen items of stormwater work not included in other bid items but necessary for accomplishing the work and shall apply only to extra work or additional items over and above those specified or shown on the plans. The Contractor shall negotiate with the Owner regarding the construction cost of additional work. The cost of this additional work shall be agreed upon in writing and approved by the Owner or his authorized representative prior to starting this additional work.

C120 Ditch Excavation/Regrade/Misc Grading

The Contractor shall furnish equipment, labor, and materials to perform ditch excavation, regrading a swale or miscellaneous grading as shown the Plans or as directed by the Engineer.

The work includes all clearing, pavement, sidewalk, curb, and gutter removal, care of structures and adjacent property, placing, maintenance, and removal of shoring, sheeting, and bracing, removal of water, backfilling, disposal of surplus excavated material, temporary restoration of street surfaces, digging test pits to locate existing house laterals when requested by the Engineer, and other work appurtenant to the ditch excavation as specified and directed.

The quantity of Ditch Excavation, in cubic yards, to be measured for payment will be the total excavation, as shown the Plans or as directed and approved by the Engineer. Unauthorized ditch excavation will not be measured or paid for.

The contractor shall refer to ditch excavation/regarding and conform to the requirements of the latest version of the FDOT Standard Specifications for Workmanship and Materials Section 110 – Clearing and Grubbing and FDOT Workmanship and Materials Section 120 – Excavation and Embankment.

Payment for Ditch Excavation ordered in writing by the Engineer will be made at the Contract Item Unit Price per cubic yard of excavation as follows:

Item	Description	Unit
SW120	Regrade ditch/embankment/misc. grading	SY

C125 – REGULAR EXCAVATION

The Contractor shall furnish and install all labor, materials, services, equipment and appurtenances to excavate and construct stormwater pond as shown in the Contract Drawings.

All Regular Excavation for construction stormwater ponds shall conform to the requirements of the latest version of the FDOT Workmanship and Materials Section 120 – Excavation and Embankment.

The work includes, but is not limited to, the following: surveying stakeout, excavating and removing all fill dirt, rough and final grading of the side slopes and bottom, root pruning, and dewatering, and as shown in the Contract Drawings.

Payment for Regular Excavation will be made at the Contract Item Unit Price per cubic yard of soil removal.

Item	**Description**	**Unit**
SW125	Regular Excavation	CY

C350 Concrete Flume

The Contractor shall furnish all labor, equipment and materials to construction and maintain the concrete flume and appurtenant work as shown the Plans, specified, or as directed by the Engineer.

The concrete flume shall conform to the requirements of the Workmanship and Materials Section 345 - Portland Cement Concrete.

The work includes all excavation, formwork, shoring, bracing, filling, shaping, grading, base material, paved surfaces, lawn replacement incidental to concrete pavement, and all appurtenant work complete in place.

The quantity of Concrete Flume to be measured for payment will be the actual area of concrete placed in the work within payment limits as shown the Plans, specified, or as directed by the Engineer.

Payment for Concrete Flume will be made at the Contract Item Unit Price per square yard of concrete flume placed as follows:

Item	**Description**	**Unit**
SW350	Concrete flume	SY

C425 Stormwater Inlets, Manholes, And Junction Boxes

The Contractor shall furnish all materials and equipment, test, construction, install, reconstruct, and maintain the stormwater inlets, stormwater manholes and stormwater junction boxes as shown the Plans, specified, or as directed by the Engineer.

Stormwater inlets, manholes, and junction boxes shall conform to the requirements of the City Standard Specifications - Workmanship and Materials Section 425 - Stormwater Inlets, Manholes and Junctions Boxes.

The work includes all testing, excavation, backfilling, limestone screenings, bedding, sheeting, shoring, bracing, dewatering, formwork, castings, brickwork, adjusting structures, removal of pavement, sidewalks, curb and curb gutter, concrete work and reinforcing, all inlet and outlet pipe, making all pipe connections, setting pipe stubs and plugs for future connections, nonpermanent and special temporary pavement replacement, disposal of surplus excavated material, and protection of adjacent facilities, and all appurtenant work, complete and in place.

Not included in the work are sheeting left in place, additional earth excavation or additional select fill material which, if ordered or specified, will be included for payment under other Contract items.

The number of Inlets, Manholes, and Junction Boxes to be measured for payment will be the actual number of such structures installed in the work.

Payment for Inlets, Manholes, and Junction Boxes will be made at the appropriate Contract Item Unit Price as follows:

Item	Description	Unit
SW425.01	Stormwater Manhole (Type P-8)	EA
SW425.03	Stormwater Manhole (Type J-8)	EA
SW425.1	Inlet, COT Curb Type 2 (P-Bott)	EA
SW425.11	Inlet, Ditch Bottom (Type C Modified) (J-Bott)	EA
SW425.2	Inlet, COT Curb Type 2 (J-Bott)	EA
SW425.3	Inlet, COT Curb Type 3 (P-Bott)	EA
SW425.4	Inlet, COT Curb Type 3 (J-Bott)	EA
SW425.5	Inlet, COT Curb Type BR-1 (P-Bott)	EA
SW425.6	Inlet, COT Curb Type BR-2 (J-Bott)	EA
SW425.7	Inlet, COT Grate Type T (P-Bott)	EA
SW425.8	Inlet, Ditch Bottom (Type C)	EA
SW425.9	Inlet, Ditch Bottom (Type C Modified)	EA

C430 Pipe Culverts and Storm Sewers

Under the respective Contract Items for Pipe Culverts and Storm Sewers, the Contractor shall furnish all materials and equipment, construction, test, and maintain complete all pipe culverts and storm sewers as shown the Plans, specified, or as directed by the Engineer.

All pipe culverts and storm sewers, including fittings, shall be manufactured and installed in accordance with the requirements of the respective Workmanship and Materials sections.

The work includes all removal of sidewalks, driveways, curbs, curb and gutter, existing storm sewer systems, and permanent pavement; excavation, short tunnels, backfill, sheeting, shoring, bracing, dewatering, pipe bedding, pipe fittings, pipe work, making all pipe connections, flared and mitered end sections, standard pipe cradles and encasements shown the Plans, anchors, sealants, jackets and coupling bands, installation and removal of plugs and bulkheads, testing, special temporary and nonpermanent pavement replacement, protection, repair and replacement of utilities and house services, maintenance of traffic including maintaining access across driveways along the line of the work, protection, trimming and replacement of trees and shrubs, protection, repair and replacement of existing culverts and other storm sewerage facilities and all utilities, reconstruction or regrading of road shoulders and ditches, disposal of surplus excavated material, protection of existing structures, making joints in protective plastic lining between pipes and between pipes and manholes or structures and all other work incidental to the installation of all pipe culverts and storm sewers complete in place.

The work does not include sheeting left in place, rock excavation, manholes, junction chamber, surface restoration comprising lawn or permanent pavement replacement, additional earth excavation or additional selected fill material, short tunnels and driveway, sidewalk and curb and curb gutter replacement and when shown the Plans or as ordered by the Engineer, such work will be paid for under other appropriate Contract Items.

The quantity of storm sewer pipe, in linear feet, to be measured for payment shall be the actual length of new pipelines placed in the work, as shown, specified and or as directed. Pipelines will be measured along the centerline of the pipe.

Deductions in the measured length of storm sewers will be made for the width of all structures, including manholes and inlets, measured from the inside wall to the inside wall of the structure.

The measured length for stormwater force mains will include all fittings and short tunnels with deductions for the laid length of valves.

Payment for Pipe Culverts and Storm Sewers will be made at the appropriate Contract Item Unit Price per linear foot of pipe installed as follows:

Item	Description	Unit
SW430.1	Pipe Culvert (0-24” SS) (Round)	LF
SW430.2	Pipe Culvert (0-24” SS) (Round) CLIV	LF
SW430.3	Pipe Culvert (25-36” SS) (Round)	LF
SW430.4	Pipe Culvert (37-48” SS) (Round)	LF
SW430.5	Pipe Culvert (49-60” SS) (Round)	LF
SW430.6	Pipe Culvert (14” x 23” & 19”x 30” SS) (Elliptical)	LF
SW430.7	Pipe Culvert (14” x 23” & 19”x 30” SS) (Elliptical) CLIV	LF
SW430.8	Pipe Culvert (24” x 38” SS) (ECP)	LF
SW430.85	Pipe Culvert (29” x 45” SS) (ECP)	LF
SW430.86	Pipe Culvert (43” x 68” SS) (ECP)	LF
SW430.9	Pipe Culvert (38” x 60” SS) (ECP)	LF

C435 CONNECT EXISTING STORMWATER TO STRUCTURE

The Contractor shall furnish all labor, equipment, and materials required to connect the existing stormwater pipe into stormwater inlets, manholes and box culverts as shown on the Plans, specified, or as directed by the Engineer.

The work includes all excavation, cutting the stormwater pipe, attaching pipe to the new manhole or inlet by grouting, installation of stormwater pipe, connecting the stormwater pipe to the replacement manhole, removal and disposal of rubble and excess material, backfilling, compacting, post construction pipe video and all other work incidental to connecting existing stormwater pipe to a replacement manhole.

The concrete connection shall conform to the requirements of the latest FDOT Standard Specifications -Workmanship and Materials Section 346 - Portland Cement Concrete and the details denoted on the Contract Plans.

Payment for Connecting Existing Stormwater pipe lateral to Replacement Manholes will be made at the appropriate Contract Item Unit Price per connection.

Item	Description	Unit
SW435	Connect To Existing Stormwater Pipe To Manhole	EA

C530 RIPRAP (RUBBLE)

The Contractor shall furnish all labor, materials, and equipment to install RUBBLE riprap as shown on the Plans, specified, or as directed by the Engineer.

The work includes all excavation, backfilling, grading, compacting, restoration, geotextile fabric,

select fill, dewatering, broken stone rubble, shaping, disposal of surplus excavated material, and all incidentals, complete and in place.

The riprap (rubble) shall conform to the requirements of the latest FDOT Standard Specifications -Workmanship and Materials Section 530 – Riprap (Rubble) and latest FDOT Standard Specifications – Workmanship and Materials Section 985 – Geotextile Fabrics and the details denoted on the Contract Plans.

Payment for Rubble Riprap shall be made at the appropriate Contract Item Unit Price per cubic yard of rubble riprap installed.

Item	**Description**	**Unit**
SW530	Riprap (Rubble)	EA

SCHEDULE C - WATER CONTRACT PAY ITEMS for MINOR PROJECTS

CM1.00 General

The Contractor shall receive and accept the compensation provided in the Proposal and the Agreement as full payment for furnishing all materials and all labor, tools and equipment, for performing all operations necessary to complete Minor Projects work under the Agreement, and also in full payment for all loss or damages arising from the nature of the work, or from any discrepancy between the actual quantities of work and quantities herein estimated by the Engineer, or from the action of the elements or from any unforeseen difficulties which may be encountered during the prosecution of the work until the final acceptance by the Department.

Minor Projects work directed through the Contract typically will: 1) originate from the Department's Distribution Division; 3) be relatively smaller, isolated construction jobs not affiliated with a larger pipeline construction project, i.e., meter service installations, single fire hydrant installations and/or removals, restoration jobs (for construction jobs done by others), and valve installations and/or replacements. Minor Projects work orders require expedited construction (as outlined in Specific Provision S4.04 and the Minor Projects Contract Pay Item Descriptions below), and will typically occur on an as-needed basis throughout the City of Tampa's service area.

Water construction specified in and through this Contract, and not designated as "Minor Projects", is considered Major Projects work, and shall be paid in accordance with the non-Minor Projects Contract Pay Items Descriptions and the unit prices quoted in the Proposal for those items. Contract Pay Item Descriptions applicable to Minor Projects work are designated herein with "Minor Projects", and "DD" has been added to the applicable Minor Projects Contract Pay Items, differentiating the Minor Projects Pay Items from other similarly numbered and described Pay Items in the Contract.

It is the intent of these contract documents that any cost for which compensation is not directly provided by a Minor Projects Bid Pay Item shall be prorated and included in the Bid Pay Item for which they are required – except:

1) additional compensation shall be provided for specific ancillary construction materials/installations identified in the Minor Projects Pay Item Descriptions as conditional on the nature and type of construction directed, and necessary to execute the work. Said additional compensation shall be based on the applicable Major Projects unit rates for those items in the Bid Proposal;

2) additional compensation shall be provided for any Maintenance of Traffic (MOT) required for a given work order based on the MOT sub-contractor's invoice for a given work order (corroborated by count records the Contractor shall provide to the Engineer daily) plus

10% OH&P.

Unit prices quoted in the Contractor’s Bid Proposal for Minor Projects installations shall include all costs and expenses for taxes, labor, equipment, commissions, transportation charges and expenses, patent fees and royalties, labor for handling material during inspection together with any and all other costs and expenses for performing and completing the work as shown on the plans and specified herein. Payment for any Minor Projects Pay Items at the unit prices shown in the Proposal shall be in accordance with the description of that item in this Section.

No separate payment will be made for the following items. The cost of such work shall be included in the Minor Projects contract pay items associated with them, including any separate mobilization/ demobilization for compliance with FDEP or any other agency:

1. Mobilization
2. Clearing and grubbing;
3. Excavation, including necessary pavement/slab removal;
4. Shoring and sheeting as required by OSHA trench excavation safety standards unless specifically provided for in a pay item;
5. Dewatering and proper disposal of all water unless specifically provided for in a pay item;
6. Backfill and proper compaction, including suitable fill;
7. Grading;
8. Replacement or restoration of paved or unpaved roadways, grass and shrubbery plots outside of established pay limits;
9. Temporary facilities and controls during construction such as water/sanitary facilities, traffic control, informational signs and environmental protection;
10. Providing and maintaining silt barriers for drainage structures and silt fences, if required;
11. Removing and legally disposing of waste material due to construction;,
12. Cleanup and restoring the job site to its original condition, which includes but is not necessarily limited to restoring the ground surface to its original grade;
13. Testing and placing system in operation, including re-mobilization (if required) for FDEP testing;
14. Any material and equipment required to be installed and used for the tests;
15. Maintaining the existing quality of service during construction;
16. Repair of sanitary sewer house laterals and water services damaged during construction;
17. Adjusting new or existing water meter boxes to grade;
18. Appurtenant work as required for a complete and operable system;
19. Coordination with all Federal, State and Local agencies and utilities;
    Cutting of existing or new pipe for installation of new pipe, valves or fittings;
20. Repair of private irrigation systems damaged during construction;
21. Maintaining red-line drawings of changes to construction plans, to be submitted for FDEP clearance;
22. Furnishing record drawings based on the completed construction. **Final Payment will**

not be made for work orders until As-built drawings are received.

23. Furnishing and installing polyethylene encasement per Standard Detail 2.05 for all buried ductile iron pipe, all fittings and tapping sleeves.

The Contractor's attention is again called to the fact that the quotations for the various Minor Projects work items are intended to establish a total price for completing the work in its entirety. Should the Contractor feel that the cost for any item of work has not been established by the Proposal or Contract Pay Items, he shall include the cost for that work in some other applicable bid item, so that his proposal for the project does reflect his total price for completing the work in its entirety.

The Contractor may be authorized to receive payment after each work order is complete, approved, accepted, and administratively processed by the City.

Following final payment by the City, the Contractor shall maintain the surface of unpaved trenches, shrubbery, fences, sod, and other surfaces disturbed for a period of six (6) months thereafter and shall maintain the repaved areas, curbs, gutters and sidewalks, trees, if replaced by the Contractor, for one (1) year after acceptance. The cost of maintaining the restored areas is considered incidental to the cost of restoring the areas disturbed by the Contractor. These costs shall be prorated and included in the cost for the Minor Projects bid item for which it is required.

The quantities for payment under this Agreement shall be determined by actual measurement of the completed items, in place, ready for service and accepted by the City, in accordance with the applicable method of measurement therefore contained herein. A representative of the Contractor shall witness all field measurements.

All work shall be in accordance with the Technical Specifications and Standard Details herein. All construction materials shall be in accordance with the Material Specifications herein.

CM5.00 Fire Hydrants: New Installation, or Replacement – Minor Projects

The Contractor shall provide all labor, equipment and specified materials to completely furnish and/or install full and complete fire hydrant assemblies on existing water mains as shown on the construction plans or as directed by the Engineer through Minor Projects work orders.

As notified in S4.04, each fire hydrant installation (new installation or replacement) issued through a Minor Projects work order **must be completed within 10 calendar days** of issuance to the Contractor.

The “hydrant assembly” to be furnished is 10 LF or less of 6” DIP, hydrant elbow, hydrant barrel

extension, and hydrant barrel as shown in Standard Detail 4.01.

Minor Projects hydrant assembly installation shall include, but may not be limited to:

1. Excavation of hydrant assembly trench;
2. Maintaining the trench that shall include dewatering, bracing and sheeting where required or as directed by the Engineer;
3. As directed, either cutting an existing hydrant tee from the main to remove an existing hydrant assembly, or
4. Tapping an existing main for a new fire hydrant installation;
5. Anchoring the hydrant to existing or new main;
6. Furnishing and installing of up to and including ten (10) feet of 6-inch ductile iron pipe;
7. Removing any plugs, caps, restraining devices, etc. from existing water mains;
8. Furnishing and installing all mechanical thrust restraint beginning at the hydrant valve as required in the Technical Specifications or as directed by the Engineer;
9. Furnish and installing polyethylene encasement for all underground pipe and fittings;
10. Furnish and install hydrant in the plumb position with 4.5’clearance in the back and 7’ clearance in the front and on each side from walls, poles and obstructions;
11. Furnishing and installing a concrete thrust collar around the barrel of the hydrant and 12” below grade as shown in Standard Detail 4.01;
12. Furnishing and installing of a concrete "support block" under each hydrant;
13. Furnishing and installing of a concrete support cradle under each hydrant tee on PVC mains;
14. Backfilling and compacting hydrant assembly trench;
15. Furnish high grade enamel OSHA yellow paint and paint hydrant barrel as required in the Technical Specifications;
16. Furnishing high grade enamel OSHA green paint and paint the hydrant bonnet;
17. Furnishing and installing one blue, reflective pavement marker (RPM) in the street adjacent to the hydrant at a location to be determined by the Engineer. The RPM shall meet or exceed all provisions of the Florida Department of Transportation, Standard Specifications for Road and Bridge Construction, Section 706;
18. Furnishing and installing an approved blue VALVE curb marker on the adjacent curb (or edge of pavement if no curb is present);
19. Pressure testing the hydrant assembly in conformance with these documents;
20. Backfilling and compacting the trench;
21. Cleaning up and restoring the job site which shall include re-grading the terrain; and
22. Removing and legally disposing of all waste materials.

The Contractor shall do all things necessary to completely install a fire hydrant assembly in accordance with the Technical Specifications, Standard Details or as directed by the Engineer.

Payment will be based on the number of hydrant assemblies installed complete and working to

the satisfaction of the Engineer. Payment for tees, valves, taps, fittings (except the hydrant elbow, which is paid for part of the hydrant assembly), and restoration will be made utilizing the appropriate Major Projects contract bid item(s). Separate payment will be made for any 6-inch ductile iron pipe required in excess of 10 feet connecting the hydrant gate valve to the hydrant.

Additional compensation will be provided for any Maintenance of Traffic (MOT) required for a given work order based on the MOT sub-contractor’s invoice for a given work order (corroborated by count records the Contractor shall provide to the Engineer daily), plus 10% OH&P. Any restoration required shall be compensated in accordance with the Major Projects restoration pay items in the Contract.

In addition, it will be the Contractor's responsibility to determine the correct size (bury depth) of each hydrant installed so that the requirements of the Technical Specifications are satisfied. Any hydrant not installed to the proper grade shall be replaced with one of the correct size by the Contractor at his expense prior to final approval and acceptance.

Fittings required because of contractor convenience, (i.e. installed because the contractor elected to install a shallow bury hydrant) shall be furnished and installed at the contractor's expense.

Payment for Minor Projects hydrant installations shall be made under:

Item No.	Description	Unit
DD5001	F&I full fire hydrant assembly on existing main - via Tap	EA
DD5002	F&I full fire hydrant assembly on existing main - via remove & replace existing FH, Hydrant Valve & Tee	EA
DD5003	F&I fire hydrant assembly & new hydrant valve downstream of existing (to remain, wasted) hydrant valve	EA

CM5.20 Fire Hydrants: Removal Only - Minor Projects

The Contractor shall provide all labor, equipment, and material for Minor Projects work orders directing removal and salvage of existing fire hydrant assemblies on existing water mains. Minor Projects hydrant removal and salvage includes, but may not be limited to:

1. Excavate the hydrant pit;

Type I - if removal only to existing hydrant valve *(existing valve to remain, wasted)*:

2. Furnish and install restraining devices to anchor the existing hydrant shut-off valve to the pipeline tee;
3. Remove hydrant from hydrant lead (or, remove hydrant and lead);

4. Furnish & install restrained plug or cap, and/or thrust block (if required and agreed by the Engineer) behind the cap or plug; or,

Type II - if removal includes existing hydrant valve and tee:

5. Furnish & install new spool-piece of appropriate diameter pipe, sleeve & restraints to restore the main line;
6. Remove any hydrant protection post(s);
7. Backfill and compact the hydrant pit;
8. Clean up and restore the job site which shall include re-grading the terrain;
9. Remove and legally dispose of all waste materials;
10. Transport the removed hydrant without delay to the location designated by the Engineer or legally dispose the hydrant; and
11. Unload the removed hydrant at the designated location.

Contractor shall be paid for each hydrant removed, salvaged, returned or disposed. All hydrants removed shall remain the property of the City unless otherwise directed by the Engineer. If the City opts not to remain the owner, the Contractor shall remove and properly dispose of the hydrant at his expense.

If hydrant removal required is Type I, costs of the fittings and thrust block (if required) shall be included in the unit price quoted for the pay item. If a Type II hydrant removal is required, the Contractor shall receive additional compensation for the new pipe spool-piece, solid sleeve, and restraint devices required to restore the mainline, in accordance with the applicable Major Projects pay item unit prices.

Additional compensation will be provided for any Maintenance of Traffic (MOT) required for a given work order based on the MOT sub-contractor’s invoice for a given work order (corroborated by count records the Contractor shall provide to the Engineer daily), plus 10% OH&P.

Any restoration required shall be compensated in accordance with the Major Projects restoration pay items in the Contract.

Payment shall be made under:

Item No.	Description	Unit
DD5201	Remove and salvage hydrant – Type I removal	EA
DD5202	Remove and salvage hydrant – Type II removal	EA

CM6.00 Valves: Install In-line, into Existing Water Mains – Minor Projects

The Contractor shall provide all labor, equipment and materials to completely furnish and install in-line valves into existing pipelines, including all accessories and incidentals, through Minor Projects work orders, to include: 2” – 16” gate valves, and 16” - 48” butterfly valves.

Annually, the Department anticipates issuing Minor Projects work orders for 30-40 large valve installations and/or replacements (valves 12” and larger), and 20 for valves under 12-inches.

Minor Projects valve installation/replacement shall include, but may not be limited to:

1. Excavate the trench for installation and/or removal; or,
2. Remove the lid/cover from a buried concrete vault housing an existing large valve (some 16” and larger valves were installed inside below-grade, masonry-walled vaults with concrete top- and bottom-slabs);
3. Maintain the trench/vault, that shall include dewatering and bracing and sheeting where required or as directed by the Engineer;
4. Furnish and install a specified valve into an existing mainline of DIP, CIP or PVCP with a valve box, including making two cuts of the existing pipe to remove the broken valve, and/or to install the new valve;
5. Furnish and install appropriate sized solid-sleeve, up to a 4’ spool piece of pipe, and restraint devices necessary to install the valve, or to sleeve the pipe back together (if not replacing the broken valve);
6. Furnish and install a specified valve on existing HDPEP mainline along with all associated HDPE mechanical joint adapters and appurtenances;
7. Polywrap all buried DIP and fittings installed;
8. Backfill and compact the trench, or the vault;
9. Furnish, form and pour a 6-inch thick concrete pad around each valve box installed in non-paved areas;
10. Furnish approved paint and paint the valve cover;
11. Furnish and install (or form and pour) concrete support blocks under valves installed on PVC and HDPE pipelines;
12. Clean-up and restore the job site which shall include re-grading the terrain; and
13. Remove and legally dispose of all waste materials.

Payment shall be made for the number of each size valve and valve box installed and incorporated into the piping system complete, working and operating to the satisfaction of the Engineer, through Minor Projects work orders. No additional compensation will be provided for pipe spool-piece, solid-sleeve, or restraint devices necessary to install the valve into an existing pipeline – costs of these items should be prorated and included in the applicable Minor Projects valve installation Pay Item.

Additional compensation shall be provided for restoration required, in accordance with the Major Projects restoration pay items in the Contract.

If Maintenance of Traffic (MOT) is required for a given Minor Projects Valve Replacement work order, compensation shall be provided based on the MOT sub-contractor’s invoice for that job (corroborated by count records the Contractor shall provide daily to the Engineer), plus 10% OH&P.

The Contractor shall be compensated for any linestops required (and agreed by the Engineer) to facilitate the Minor Projects Valve Installation/Replacements in accordance with the applicable Major Projects linestop pay items.

Payment shall be made under:

Item No.	Description	Unit
DD6012	F&I 2" gate valve and box on existing DIP, CIP or PVCP	EA
DD6013	F&I 3" gate valve and box on existing DIP, CIP or PVCP	EA
DD6014	F&I 4" gate valve and box on existing DIP, CIP or PVCP	EA
DD6015	F&I 6" gate valve and box on existing DIP, CIP or PVCP	EA
DD6016	F&I 8" gate valve and box on existing DIP, CIP or PVCP	EA
DD6017	F&I 10" gate valve and box on existing DIP, CIP or PVCP	EA
DD6018	F&I 12" gate valve and box on existing DIP, CIP or PVCP	EA
DD6019	F&I 16" gate valve and box on existing DIP, CIP or PVCP	EA
DD6020	F&I 16" butterfly valve and box on existing DIP, CIP or PVCP	EA
DD6021	F&I 20" butterfly valve and box on existing DIP or CIP	EA
DD6022	F&I 24" butterfly valve and box on existing DIP or CIP	EA
DD6023	F&I 30" butterfly valve and box on existing DIP or CIP	EA
DD6024	F&I 36" butterfly valve and box on existing DIP or CIP	EA
DD6025	F&I 42" butterfly valve and box on existing DIP or CIP	EA
DD6026	F&I 48" butterfly valve and box on existing DIP or CIP	EA
DD6027	F&I 16" gate valve and box on existing DIP or CIP, in Vault	EA
DD6028	F&I 16" butterfly valve and box on existing DIP or CIP, in Vault	EA
DD6029	F&I 20" butterfly valve and box on existing DIP or CIP, in Vault	EA
DD6030	F&I 24" butterfly valve and box on existing DIP or CIP, in Vault	EA
DD6031	F&I 30" butterfly valve and box on existing DIP or CIP, in Vault	EA
DD6032	F&I 36" butterfly valve and box on existing DIP or CIP, in Vault	EA
DD6033	F&I 42" butterfly valve and box on existing DIP or CIP, in Vault	EA
DD6075	F&I 2" gate valve and box on existing HDPEP	EA
DD6076	F&I 4" gate valve and box on existing HDPEP	EA
DD6077	F&I 6" gate valve and box on existing HDPEP	EA
DD6078	F&I 8" gate valve and box on existing HDPEP	EA

DD6079 F&I 12" gate valve and box on existing HDPEP EA

CM8.00 <u>Water Meter & Small Fire Line Service Installation – Minor Projects</u>

CM8.20 <u>Metered Services Two-Inch and Less – Minor Projects</u>

The Contractor shall provide all labor, materials and equipment for Minor Projects meter service installations and/or transfers of 3/4" (single or dual service), 1", 1½", and 2" meters and 2" double detector check valves, as specified. New meter service installations and/or transfers issued to the Contractor through Minor Projects work orders will be independent of pipeline projects, and are generally required by the Department as result of customer applications for water service. Most will be isolated single installations, in varied locations across the City of Tampa water service area – which generally extends from South Tampa to New Tampa, from 50th Street to Memorial Highway.

The Department anticipates approximately 60 Minor Projects meter installations will be required each month – depending on customer demand for meter services.

As notified in S4.04, each new meter service installation issued through a Minor Projects work order **<u>must be completed within fourteen (14) calendar days</u>** of issuance to the Contractor.

Based on Department performance expectations from the Mayor, Minor Projects meter installations must be completed within 2 weeks of work order issuance **at least 99% of the time**.

Given the time constraints for these installations, the Contractor should expect some nighttime and/or weekend work will be required to complete meter installations issued through Minor Projects work orders – and that should be factored into unit prices quoted for these installations. Additional compensation for working non-standard hours or days will not be provided for Minor Projects meter service installations. Unit prices quoted for this schedule (Schedule C) shall include all costs required to complete the services requested, as specified.

Meter service lengths (as described in pay items) are defined as follows:

- 0-15' service line required from main to meter is up to 15' long
- +15-80' service line required is greater than 15', up to and including 80'
- +80-150' service line required is greater than 80', up to and including 150'

All water meters and double detector check valve assemblies required for Minor Projects installations will be furnished by the City, for installation by the Contractor.

Meter service installations issued through Minor Projects work orders shall include, but may not

be limited to:

1. Excavating and maintaining the trench;
2. Making the appropriate size tap;
3. Furnish and install an appropriately sized steel, PVC or HDPE sleeve under paved areas for long-side meter service via open cut, horizontal directional drilling/directional bore or "moling", as directed by the Engineer;
4. For all long-side HDPE service lines, furnish and install two continuous 12-ga. min. wires along the top of the pipe, inside the sleeve. If a steel sleeve is used, tracer wire shall be taped every 12” to the top outside of the sleeve. There shall be no dead ends, and each locator wire shall be routed from the corporation to the meter box. Connections between wire ends shall be made using approved connections at each end as shown in the standard details;
5. For use on DIP, CIP or PVC pipe, furnish and install the appropriate size and type of corporation stop, HDPE tubing, any required service fittings, curb stop, meter box, and tail piece extension as designated by the Department's Technical Specifications and Standard Details. For use on HDPE pipe, furnish and install the appropriate size and type of electrofusion tapping tee or electrofusion corporation, HDPE tubing or pipe, any required service fittings, curb stop, meter box and tail piece extension as designated by the Department's Technical Specifications and Standard Details;
6. Installation of the appropriate sized (City-furnished) meter, or transferring an existing meter to new service line;
7. Backfilling and compacting of all excavations;
8. Cleaning-up and restoring the job site to its original condition which includes but is not limited to restoring the elevation of surface to its original grade; and
9. Relocating existing meters and adjusting existing meters to grade; and
10. Removing and legally disposing of all waste materials.

Payment shall be made for each Minor Projects meter service furnished and installed, and accepted by the Engineer.

Additional compensation will be provided for any Maintenance of Traffic (MOT) required for a given work order based on the MOT sub-contractor’s invoice for a given work order (corroborated by count records the Contractor shall provide to the Engineer daily), plus 10% OH&P.

Any restoration required shall be compensated in accordance with the Major Projects restoration pay items in the Contract.

Payment shall be made under:

Item No.	Description	Unit
DD8200	Furnish, tap, and install 3/4" or 1" HDPE meter service (0-15')	EA
DD8201	Furnish, tap, and install 3/4" HDPE meter service (+15-80')	EA
DD8202	Furnish, tap, and install 3/4" HDPE meter service (+80-150')	EA
DD8203	Furnish, tap, and install 3/4" Dual HDPE meter service (0-15')	EA
DD8204	Furnish, tap, and install 3/4" or 1" Dual HDPE meter service (+15-80')	EA
DD8205	Furnish, tap, and install 3/4" Dual HDPE meter service (+80-150’)	EA
DD8206	Furnish, tap and install 1" Dual HDPE meter service (0-15')	EA
DD8207	Furnish, tap, and install 1" or 1-1/2" HDPE meter service (+15-80')	EA
DD8208	Furnish, tap, and install 1" or 1-1/2" HDPE meter service (+80-150')	EA
DD8209	Furnish, tap, and install 1 1/2" or 2" HDPE meter service (0-15')	EA
DD8210	Furnish, tap, and install 2" DDCV and HDPE service (0-15)	EA
DD8250	Furnish, tap, and install 3/4" or 1" HDPE meter service on HDPEP (0-15')	EA
DD8251	Furnish, tap, and install 3/4" HDPE meter service on HDPEP (+15-80')	EA
DD8252	Furnish, tap, and install 3/4" HDPE meter service on HDPEP (+80-150')	EA
DD8253	Furnish, tap, and install 3/4" Dual HDPE meter service on HDPEP (0-15')	EA
DD8254	Furnish, tap, and install 3/4" or 1” Dual HDPE meter service on HDPEP (+15-80')	EA
DD8255	Furnish, tap, and install 3/4" Dual HDPE meter service on HDPEP (+80-150')	EA
DD8256	Furnish, tap, and install 1" Dual HDPE meter service on HDPEP (0-15')	EA
DD8257	Furnish, tap, and install 1" or 1-1/2" HDPE meter service on HDPEP (+15-80')	EA
DD8258	Furnish, tap, and install 1" or 1-1/2" HDPE meter service on HDPEP (+80-150')	EA
DD8259	Furnish, tap, and install 1 1/2" or 2" HDPE meter service on HDPEP (0-15')	EA
DD8260	Furnish, tap, and install 2" DDCV and service on HDPEP (0-15')	EA

CM9.00 Restoration – Minor Projects

CM9.10 General

The Contractor shall furnish all labor, equipment, and materials to restore construction areas (to include streets, sidewalks, and driveways) to an equal or better condition than surfaces adjacent to the disturbed areas, and in conformance with the appropriate agency having jurisdiction over the restored area. Minor Projects work orders for restoration will be issued in response to pipeline construction done by others. Restoration services provided shall be in accordance Contract Document’s Technical Specifications Section T4.00 RESTORATION.

The Contractor shall restore areas to those limits as directed in the work order by the Distribution Division and the Engineer, and shall be compensated in conformance with the appropriate Minor Projects pay items for actual quantities furnished and installed.

As notified in Specific Provision S4.04, restoration jobs issued through a Minor Projects work order must be completed within specified periods as follows, subsequent to issuance of the work order to the Contractor:

Worksites (restoration, State roads)	1 day
Worksites (restoration, Streets)	7 days
Worksites (restoration, Driveways)	8 days
Worksites (restoration, Sidewalks)	10 days

The Contractor should factor potential costs of meeting these time requirements into unit prices quoted for these services. Additional compensation for working non-standard hours or days will not be provided. Unit prices quoted for this schedule (Schedule C) shall include all costs required to complete the services requested, as specified.

CM9.20 Pavement Restoration – Minor Projects

The Contractor shall provide all labor, equipment and materials to restore pavement and pavement bases that were cut and removed during the course of pipeline construction by others. Minor Projects pavement and pavement base restoration shall include roadways, driveways, parking lots, etc.

Payment for Minor Projects restoration work orders shall be made for:

1. Furnishing, placing, grading, and compacting approved lime rock base;
2. Furnishing, placing, grading, and compacting approved crushed concrete base;
3. Furnishing, placing, grading, and compacting approved asphalt base course, ABC-3 or Superpave Type B-12.5;
4. Furnishing, placing, grading and compacting approved "Type S-1"or "Superpave Type SP-12.5” asphaltic concrete surface course;
5. Furnishing, placing, grading and compacting to full depth approved "Type S-1" or "Superpave Type SP-12.5" asphaltic concrete surface course;
6. Restoring 6" thick concrete driveway;
7. Furnishing and installing brick pavement;
8. Installing brick pavement;
9. Furnishing and installing Thermo Striping;
10. Furnishing, placing, and grading Type S-III or Superpave "Type SP-9.5" asphaltic concrete overlay;
11. Mechanical milling of 1-inch of existing asphalt including proper disposal of the milled material;
12. Mobilization required for mechanical milling operations;
13. Furnishing and installing traffic loops as specified and directed by the Engineer;

14 Furnishing and installing signalization loops as specified and directed by the Engineer;
15. Furnishing Traffic Control Officer (Off-Duty Law Enforcement);
16. Furnishing and installing work zone signs;
17. Furnishing and installing traffic control devices to right-of-way permit requirements;
18. Removing, transporting and disposing of pavement, concrete curb, asphaltic curb and other items removed during construction;
19. Cleaning up and restoring the job site which shall include re-grading the terrain; and
20. Removing and legally disposing of all waste materials.

All surface restoration shall be as directed by the Engineer or the regulatory agency having jurisdiction over the roadway. If not already so cut, areas requiring pavement restoration shall be saw cut prior to construction pavement removal. The costs to mechanically saw cut pavement joints and the cost to replace all striping and pavement markers are considered incidental to pavement restoration and should be included in the cost.

Asphalt shall be measured for payment based the number of tons of asphalt furnished and installed. Any pavement, concrete curb, asphaltic concrete curb or other items removed during the course of the restoration shall be disposed of by the Contractor in a manner satisfactory to the Department. The cost of removal and disposal associated with all items shall be included in the assigned restoration item.

City street pavement shall be restored in accordance with City of Tampa's PAVEMENT/RIGHT OF WAY RESTORATION REQUIREMENTS – REV-2009 guidelines. See Contract Document Technical Specifications section T4.07.

Bricks shall be replaced in accordance with the of Tampa's Vitrified Brick Replacement (Revised 4/27/2009 guidelines. See Contract Document Technical Specifications section T4.08.

Mobilization shall only be paid for milling operations and shall only be paid once per site restored, unless otherwise approved in advance by the Engineer. Milling shall be made in thickness increments of sy-inches and shall include proper disposal of the milled material.

The Contractor shall furnish all labor, materials and equipment, necessary to replace and maintain complete the traffic signalization loops as specified and directed by the Engineer. The work includes all saw-cutting of pavement, placement of loop wires and lead-in cables, non-metallic wire hold downs, wire identification tags and sealants, splicing and termination strips, testing and all other work incidental to the installation of a signalization loop complete in place. All signalization loops shall conform to the requirements of the latest edition of the Florida Department of Transportation Standard Specifications for Road and Bridge Construction. Payment for traffic signalization loops will be made at the appropriate contract item unit price per signalization loop installed.

Additional compensation will be provided for any Maintenance of Traffic (MOT) required for a given work order based on the MOT sub-contractor’s invoice for a given work order (corroborated by count records the Contractor shall provide to the Engineer daily), plus 10% OH&P.

The Contractor shall be compensated for any thermoplastic striping required based on the striping sub-contractor’s invoice for work done for a given work order, plus 10% OH&P.

Asphalt restoration quantities shall be paid per square-yard per inch.

Payment shall be made under:

Item No.	Description	Unit
DD9230	Furnish, place, and compact lime rock base	CY
DD9231	Furnish, place, and compact crushed concrete base	CY
DD9233	Furnish, place, and compact Superpave Type B-12.5 asphalt base course	SY-IN
DD9234	Furnish and install asphalt concrete surface Type S-1	SY-IN
DD9235	Furnish and install asphalt concrete surface Superpave Type SP-12.5	SY-IN
DD9236	Furnish, place and grade Type S-III asphaltic concrete overlay	SY-IN
DD9237	Furnish, place & grade Superpave Type SP-9.5 asphaltic concrete overlay	SY-IN
DD9238	Mobilization to perform milling operations	EA
DD9239	Mechanical milling of asphalt roadways in 1-inch increments	SY-IN
DD9240	Furnish and install 6" thick concrete driveway	SY
DD9241	Furnish and install brick pavement	SY
DD9242	Install brick pavement	SY
DD9243	Furnish and install signalization loops	EA
DD9244	Furnish Traffic Control Officer (Off-Duty Law Enforcement)	MH
DD9245	Furnish and install Work Zone Signs	ED
DD9246	Furnish and install Business Signs	ED
DD9247	Furnish and install Barricades (Temporary – Type II)	ED
DD9248	Furnish and install Barricades (Temporary Type III) (6”)	ED
DD9249	Furnish and install Advance Warning Arrow Panel	ED
DD9250	Furnish and install High Intensity Flashing Lights (Temporary-Type B)	ED
DD9251	Furnish and install Variable Message Sign (Temporary)	ED

CM9.30 Roadside Restoration – Minor Projects

The Contractor shall provide for all labor, equipment and materials to restore the roadside areas disturbed during the course of the pipeline construction by others. Under this Minor Projects section, payment shall be made for:

1. Restoring typical concrete curb and gutter including stabilization of sub-base and installation of curb pads;
2. Restoring stone or pre-cast curb;
3. Furnishing and placing asphaltic concrete curb;
4. Remove and restoring 4-inch thick concrete sidewalk, including applicable sidewalk ramps;
5. Restoring concrete hexagon block sidewalk;
6. Restoring the roadside areas with approved sod. Restoring the roadside area and ditch bottoms and sides with sod shall include furnishing, grading, and placing the sod; and
7. Restoring the roadside areas with approved sprig and seed. Restoring the roadside area with sprig and seed shall include furnishing, grading, placing, fertilizing, mulching, sprigging and seeding.
8. Furnishing and installing detectable warnings walking surfaces as directed by Engineer. The detectable warning surface will conform to the Florida Department of Transportation Standard Specifications for Road and Bridge Construction, current edition. The detectable warnings shall be installed in conformance with FDOT Standard Indexes 304 and 310 or in conformance with the requirements of the right-of-way regulatory agency with responsibility of the affected right-of-way. (Payment for curb and sidewalk associated with pedestrian access ramps will be made under the appropriate sidewalk and curb pay items.)
9. Cleaning up and restoring the job site which shall include re-grading the terrain; and
10. Removing and legally disposing of all waste materials.

Sidewalk and curb replacement pay quantities shall have maximum limits as specified in these documents, as shown in the plans, or as directed by the Engineer. All linear foot units shall be measured along the curb line. In all cases, the sod or seed placed shall conform in kind to the existing at the particular location.

Additional compensation for working non-standard hours or days will not be provided. Unit prices quoted for this schedule (Schedule C) shall include all costs required to complete the services requested, as specified.

Additional compensation will be provided for any Maintenance of Traffic (MOT) required for a given work order based on the MOT sub-contractor’s invoice for a given work order (corroborated by count records the Contractor shall provide to the Engineer daily), plus 10% OH&P.

Any restoration required shall be compensated in accordance with the Major Projects restoration pay items in the Contract.

Payment shall be made under:

Item No.	Description	Unit
DD9310	Furnish and install Type “D” concrete curb	LF
DD9311	Furnish and install Type “F” concrete curb	LF
DD9312	Furnish and install stone or precast curb	LF
DD9313	Remove and install existing stone curb	LF
DD9314	Furnish and install asphaltic concrete curb	LF
DD9315	Furnish and install 4" thick concrete sidewalk	SY
DD9316	Furnish and install hexagon block sidewalk	SY
DD9317	Grade and sod roadside, ditch bottoms and sides	SY
DD9318	Grade, fertilize, sprig, and hydro-seed roadside	SY
DD9319	Furnish and install detectable warnings sidewalk disability ramps	EA

TECHNICAL SPECIFICATIONS - WATER

T1.00 GENERAL REQUIREMENTS

T1.01 Summary of Work

The Contractor shall have access to and inspect the project area prior to beginning construction and ascertain existing conditions as per Section I-2.01 of the Instructions to Bidders.

The work will include the furnishing of all services, labor, equipment and certain materials necessary for a complete installation of water lines and performed in a thorough and workmanlike manner, as outlined in Section G-1.02 of the General Provisions. All items implied, usually included, or required for the construction of a complete operating system shall be installed whether or not shown on the plans or specified herein. In general, pipe shall be provided with a minimum of 36 inches of cover.

The Contractor will preserve and protect all existing vegetation such as trees, shrubs and grass adjacent to the sites, as outlined in Sections G-9.02 and G-9.03 of the General Provisions, which do not reasonably interfere with the construction, as determined by the Engineer. It will be the Contractor's responsibility to give written notification, at least 2 days prior to commencement of construction, to any owners or occupants of properties along the construction route. This notification shall be about the pending construction, in order to allow the said owners or occupants an opportunity for removing from the work site any bushes, flowers, plantings, trees etc. they wish to save that are within the limits of construction. The Contractor will be responsible for all unauthorized cutting or damaging of trees and shrubs, including damage due to careless operation of equipment, stockpiling of materials or tracking of grass by equipment. The Contractor will be liable for, or will be required to replace or restore at no additional expense to the City, all vegetation not protected or preserved as required herein that may be damaged or destroyed.

City-owned utilities within project limits will include water, wastewater, drainage, and traffic signal cables. All other utilities present within City of Tampa rights-of-way are considered private utilities. Private utilities are responsible for locating their utilities prior to construction and, if required, relocating and/or temporarily supporting their utilities to allow the safe construction of the work under this contract. Private utilities must provide this service without charging a fee to the City’s Contractor.

City-owned utilities and structures not shown on Contract Drawings to be removed and replaced or relocated shall be protected in place and utility service shall be maintained. Where temporary conflicts occur between existing City-owned utilities and the new construction, the Contractor shall protect in place or relocate said utilities and maintain utility service all to the satisfaction of the City. Utilities and structures shown on the drawings to be removed and replaced or relocated by the Contractor shall conform to the requirements of the applicable technical specifications.

Record drawings for existing gravity sewer and laterals along the project route are often not complete. The Contractor shall be prepared to immediately repair any active sewer lateral connection damaged during construction. If the location of the active sewer lateral conflicts with the proposed location of the water main, the Contractor shall immediately notify the City, who will direct the Contractor on how to resolve the conflict. The Contractor may be required to reroute the sewer lateral either over or under the proposed water main.

T1.02 Coordination

The Contractor shall provide for the complete coordination of the construction effort including the work of subcontractors, the effort of independent testing agencies and the interrelated work with the City where tie-ins to existing facilities are required.

It shall be the Contractor's responsibility to alert the Engineer at least two working days in advance of construction, to any conflicts or potential conflicts with the proposed work. Failure of the Contractor to review the job site and alert the Engineer to any conflicts shall relieve the City from compensating the Contractor for any cost arising from any remedial action necessary to resolve the conflict with the proposed work.

All water lines, storm drains, sanitary sewers, gas or other pipe, telephone or power cables or conduits, all individual service connections and all other obstructions, whether or not shown on the plans, shall be supported where adjacent to or crossing the new utility line excavation in a manner acceptable to the Department and the respective utility owner. Wherever existing utility structures or branch connections leading to sanitary sewers or to storm drains, or other conduits, ducts, pipes, or structures present obstructions to the grade and alignment of the pipe, they shall be permanently supported, removed, relocated, or reconstructed by the Contractor through cooperation with the owner of the respective utility, structure, or obstruction involved. In those instances where their relocation or reconstruction is impractical, a deviation from line and grade will be authorized and the changes shall be made in the manner directed by the Engineer.

Approximate locations of known water, sanitary, drainage, power and telephone installations along the route of the new water mains or in the vicinity of new work are shown according to the best information available at the time of preparation of the drawings, but do not purport to be absolutely correct, and must be verified in the field by the Contractor. The Contractor shall obtain the location, elevations, and dimensions of all existing utilities, structures, and other features affecting his work prior to construction. At least 1,000 feet ahead of construction, the subcontractor shall obtain the elevations of all utilities crossing the proposed water main and, where the required separations cannot be achieved, shall notify the Engineer, in order that necessary changes may be made to permit installation of new pipe and actual locations be recorded for the City's record drawings.

In addition, careful coordination with the work of other contractors may be required if other work is underway within the project area.

Working adjacent to and crossing other utilities can be expected to be commonplace on this project. The Contractor, as outlined in Article G- 1.03 of the General Provisions, shall coordinate his construction schedule with the various utility companies as well as affected local agencies involved prior to starting the project along with a minimum of 48 hours of notice to when construction will commence in an area, in order to permit field location of utility lines prior to construction. A toll free number (811) is available to assist in such coordination efforts. This number is for the utility notification center, a program known as Sunshine State One Call of Florida, but may not totally represent all utilities involved in the construction area. The Contractor is responsible for contacting the utility notification center and to immediately notify the the Contract Administration Department (635-3432) of the "Location Request Number" obtained.

The various agencies or utilities possibly affected by the work include but are not necessarily limited to the following:

City of Tampa
Wastewater Department
306 E. Jackson St. (390A6N)
Tampa, FL 33602

Florida Dept. Transportation
2820 Leslie Rd
Tampa, FL 33619

DPW Traffic Transportation
306 E. Jackson St., (290A4E)
Tampa, FL 33602

Hillsborough County
Planning & Development Mgmt. Dept.
P.O. Box 1110
Tampa, FL 33601

Hillsborough County Right of Way Management office
5701 East Hillsborough Avenue
Suite 1222
Tampa, Florida 33610

All utilities shall be kept in operation except with the express written consent of the utility owner. It will be the Contractor's responsibility to preserve existing utilities. Any and all damage to existing utilities as a result of the Contractor's actions shall be repaired to the satisfaction of the utility owner and the City at the Contractor's expense.

Where connections are made to existing mains or other shutdowns are necessary, permission must be obtained and arrangements must be made with the Water Department for removing from service those mains that will be affected. Shutdowns must be held to a minimum in both number and duration, and accomplished at times acceptable to the Water Department. No valve or other control device on the

existing system shall be operated by the Contractor except as detailed in the Specific Provisions, sections S-31.01 - Shutdowns. Additionally, any service meter that is temporarily removed, after being approved by the Water Department, shall be returned to the original service address from which it was removed.

T1.03 Field Engineering

Each element of the work is subject to review by the Engineer, prior to proceeding with the next element; however, this shall not relieve the Contractor of the responsibility for delivering to the City a project completed in conformance with the contract plans and specifications and guaranteed as stipulated.

T1.04 Abbreviations and Symbols

Various abbreviations and symbols may be used or referenced in these specifications and contract plans. Symbols are generally explained on the sheet of the plans entitled "Location Map, Legend and General Notes". Abbreviations commonly used, along with their full reference, are as follows:

- Cu.Yds. (CY) - Cubic Yards
- CIP - Cast Iron Pipe
- DIP - Ductile Iron Pipe
- DIPRA - Ductile Iron Pipe Research Association (formerly CIPRA)
- EA - Each
- ED - Each Day
- FDEP - Florida Department of Environmental Protection
- FDOT - Florida Department of Transportation
- FL - Flanged Joint
- HDD - Horizontal Directional Drilling
- HDPEP - High Density Polyethylene Pipe
- Lin. Ft. (LF) - Lineal Foot
- LS - Lump Sum
- mg/l - Milligrams per Liter
- MJ - Mechanical Joint
- MH - Man Hours
- NSF - National Science Foundation
- OSHA - Occupational Safety and Health Administration
- ppm - Parts per Million
- psi - Pounds per Square Inch
- PVCP - Polyvinyl Chloride Pipe
- RPR - Resident Project Representative
- S.P. - Steam Pressure
- Sq. Ft. (SF) - Square Feet

- Sq. Yds. (SY) - Square Yards
- TN - Ton
- W.O.G. - Water, Oil, Gas
- NAVD88 - North American Vertical Datum 1988

T1.05 <u>Submittals, Shop Drawings, Product Data and Samples</u>

The Contractor shall submit 4 copies of shop drawings as stated in Article G-3.02 of the General Provisions, plus those copies necessary for his own requirements in accordance with Section 3 of the General Provisions. The shop drawings shall have been checked and stamped approved by the Contractor and identified as the Engineer may require. This data shown in the shop drawings shall be complete with respect to dimensions, design criteria, materials of construction, and the like, to enable the Engineer to review the information required. The data shown on the shop drawings shall include, in addition to that specified in the General Provisions, reference to specification section, drawing number, item identification on catalog cuts and like information to expedite review. Incomplete submissions will be returned without action.

Items that are on the Water Department's pre-approved material list will not be required to go through the shop drawing submittal process, provided that the list of materials is submitted to and approved by the Engineer in advance of the start of construction.

The Engineer will review and return one (1) set of the shop drawings along with those sets submitted by the Contractor over and above the quantity required by Article G-3.02 of the General Provisions. The returned sets shall bear the Engineer's comments and shall be returned with reasonable promptness. The Contractor's stamp of approval on any shop drawing shall constitute a representation to the Engineer that the Contractor has either determined and verified all field construction criteria, materials, catalog numbers and similar data or he assumes full responsibility for doing so, and that he has reviewed or coordinated each shop drawing with the requirements of the work, contract documents and technical specifications.

The Engineer's review of a shop drawing is only for general conformance with the design concept of the project, and shall not relieve the Contractor from his responsibility for and deviation from the requirements of the contract documents or technical specifications, unless the Contractor has, in writing, called the Engineer's attention to such deviation at the time of the shop drawing submission and the Engineer has given written approval to the specific deviation. Any review by the Engineer shall not relieve the Contractor from his responsibility for errors or omissions in the shop drawings.

One complete set of reviewed shop drawings, product data and samples shall be kept at the site at all times. During the work specified as shown on the shop drawings, the Contractor shall make no deviations from the reviewed drawings, and the changes made thereon by the Engineer, if any.

When required by the Engineer, shop drawings or product data shall be submitted for, but shall not be necessarily be limited to, the following:

- Electrofusion equipment and personnel certifications
- Butt fusion equipment and personnel certifications
- Horizontal directional drilling equipment and personnel certifications
- HDPE pipe, fittings and accessories
- Ductile iron pipe and fittings, including restrained joint type,
- Gate valves and butterfly valves,
- Tapping valves and sleeves
- Fire Hydrants
- Air release valves and Pedestals,
- Casing pipe and jack and bores,
- Concrete mix design, reinforcing steel and pre-cast items, if used.
- All electrofusion fittings

Whenever a standard of quality is established by a reference specification, the Contractor shall submit a certificate by the manufacturer that the material supplied meets the requirements of both these technical specifications and the referenced specifications and standards.

T1.06 Quality Control

In addition to the inspection and testing outlined in Section 5 of the General Provisions, compaction/density tests also shall be required.

For tests required by the Technical Specifications regarding soil compaction, asphalt testing and concrete cylinder strength, the Department will appoint and employ services of an independent firm to perform inspection and testing. The independent firm will perform inspections, tests, and other services specified individual specification Sections and as required by the Engineer. Reports will be submitted by the independent firm to the Engineer, in duplicate, indicating observations and results of tests and indicating compliance or non-compliance with Contract Documents. The Contractor shall cooperate with the independent firm; furnish samples of materials, design mix, equipment, tools, storage and assistance as requested; notify Engineer and independent firm a minimum of 24 hours prior to expected time for operations requiring services; and make arrangements with the independent firm and pay for additional samples and tests required for Contractor's use. Retesting required due to non-conformance with specified requirements shall be performed by the same independent firm at the direction of the Engineer. Payment for retesting will be charged to the Contractor by deducting inspection or testing charges from the Contractor's payment.

T1.07 Materials and Equipment

A) General

Materials and equipment incorporated into the work shall meet the requirements of Section 4 of the General Provisions and these specifications. The Contractor shall furnish satisfactory evidence of the quality and kind of materials and equipment as well as guarantees or warranties provided by the manufacturer. It will be necessary to submit a copy of all delivery tickets for materials used on the project, regardless of the basis of payment.

Materials, supplies or equipment to be incorporated into the work shall not be purchased by the Contractor or subcontractors subject to a chattel mortgage or under a conditional sale contract or other agreement by which an interest is retained by the seller.

All materials and equipment shall be applied, installed, connected, erected, used, cleaned, finished and conditioned in accordance with the instructions of the applicable manufacturer, fabricator or processor except as otherwise provided in the Contract Documents. At the time that any piece of equipment is placed in service or operation at the construction site, the Contractor shall arrange for a qualified representative of the manufacturer to be present for the purpose of inspecting, approving and adjusting the equipment installation. He shall remain on the job to instruct the City's personnel in proper operation and maintenance and shall remain until the equipment is operating in a satisfactory manner.

B) Quality Standards

If a standard of quality for items of equipment is established by reference on the plans or in the specifications to specific manufacturer's products, materials or construction and/or fabrication, items of equipment shall equal or exceed the standard of the referenced product as outlined in Section G-4.05 of the General Provisions.

The Engineer shall be the sole judge of material or equipment equality. The burden of proof of equality rests with the Contractor. Qualities described and shown refer to minimum criteria the Engineer will use in considering equipment proposed for the project.

It is not the intent of the Contract Documents to function as proprietary specifications. Where a particular manufacturer make and model are cited and specifically required for interchangeability of parts and to match existing equipment, this has been stated in the specifications.

C) Transportation and Handling

Materials and equipment shall be loaded and unloaded by methods affording adequate protection against damage. Every precaution shall be taken to prevent injury to the material or equipment during

transportation and handling. Suitable power equipment will be used and the material or equipment shall be under control at all times. Under no condition shall the material or equipment be dropped, bumped or dragged. When a crane is used, a suitable lift sling shall be used.

The crane shall be placed so that all lifting is done in a vertical plane. Materials or equipment skid loaded, palletized or handled on skidways shall not be skidded or rolled against material or equipment already unloaded.

Materials and equipment shall be delivered to the job site by means that will adequately support it and not subject it to undue stresses. Material and equipment damaged or injured in the process of transportation, unloading or handling shall be rejected and immediately removed from the site. They shall be replaced with materials that meet all requirements of the contract documents and are suitable to the Engineer.

D) Storage and Protection

Materials and equipment shall be stored in a manner and at a location acceptable to the Engineer to insure the preservation of their quality and fitness for the work and which precludes damage or injury and affords protection against weather staining, corrosion or vandalism. Skidded or palletized materials or equipment shall not be stacked. Electrical equipment shall be stored indoors or under cover. Sheet materials shall be stored in a manner that affords free drainage with no ponding of water. All equipment shall be stored in a secure area.

Replacement of materials or equipment damaged, destroyed or lost through improper, inadequate or careless storage shall be the Contractor's responsibility.

Stored materials and equipment shall be readily and easily accessible to facilitate inspection.

T1.08 Cleaning and Restoring

Prior to final acceptance, all rubbish and unused material due to or connected with the construction shall be removed and the premises left in a condition acceptable to the City. All damaged areas shall be repaired, and all excess earth and rubble removed. Payments due may be withheld due to failure to comply with these requirements.

Any and all existing facilities and/or conditions shall be restored to original condition or better before final payment and acceptance is made by the City.

T1.09 Preconstruction Photography

The Contractor shall furnish all labor, materials, equipment, and incidentals required to

videotape as determined and approved by the Department, that all areas within the project are, as shown in the drawings and as specified herein.

A professional video photographer who is fully experienced and qualified with the specified equipment shall perform the photography.

The total audio-video system and the procedures employed in its use shall be such as to produce a finished product that will fulfill these technical requirements. The video portion of the recording shall produce bright, sharp, clear pictures with accurate colors and shall be free from distortion or any other form of picture imperfection. All video recordings shall, by electronic means, display on the screen the time of day, the month, day and year of the recording. This time and date information must be continuously and simultaneously generated with the actual recording. The audio portion of the recording shall produce the commentary of the camera operator with proper clarity and be free from distortion at a nominal sound level of 40-50 decibels.

The color video camera used in the recording shall be capable of producing an output viewable in industry standard DVD format. It shall be capable of being viewed utilizing a TV/DVD player and/or a PC with a DVD drive/player. The DVD provided must be capable and authorized to allow reproduction by the City of Tampa and not be copyright protected. The DVD’s provided must be single sided, 4.37 computer GB capacity (DVD-5). Multiple DVD’s may be provided if necessary to show complete detail of the project. Video output from camera(s) must utilize a minimum of 8:1 zoom. The DVD shall be new and shall not have been used for any previous recording.

Video recording shall be accomplished along all routes approved by the Department which have any construction performed by the Contractor with a total length greater than 100 lineal feet. Video taping shall include any approved staging and storage areas and the route between the staging and storage areas and the project site when an off-site area is used.

When viewed, the DVD shall show the entire length of construction from right-of-way line to right-of-way line. Existing conditions should be apparent to the viewer along the length of construction. Camera pan, tilt zoom-in and zoom-out rates shall be sufficiently controlled such that recorded objects shall be clearly viewed during videotape playback. In addition all other camera and recording system controls such as lens focus and aperture, video level, pedestal, chrome, white balance and electrical focus shall be properly controlled or adjusted to maximize picture quality.

The taping shall be done so as to show the proposed construction areas in an oblique view (30 degrees). The average rate of travel during a particular segment of coverage shall be directly

proportional to the number and size of the surface features within the construction area's zone of influence.

Coverage shall include, but not be limited to, all existing driveways, sidewalks, curbs, ditches, streets, landscaping, trees, culverts, catch basins, headwalls, retaining walls, fences, visible utilities, and all buildings located within the zone of influence. Of particular concern are any existing faults, fractures, defects or other imperfections exhibited by the above-mentioned surface features. Close-up coverage shall be recorded in these areas. Audio descriptions shall be made simultaneously with support video coverage.

Engineering drawings shall be referenced, by stationing, in the audio on the tapes. If visible, house numbers shall also be mentioned in the audio. All videotapes shall be permanently labeled and shall be properly identified by videotape number and project title.

A record of the contents of each tape shall be supplied on a video log identifying each segment in the tape by location, i.e., street or easement, viewing side, traveling direction, engineering stationing, house or lot numbers, and all referenced by tape counter numbers.

No construction shall start until pre-construction photography is complete. Any portion of the video coverage deemed unacceptable by the Owner will be re-recorded by the Contractor at no additional charge.

T2.00 CONSTRUCTION OF WATER MAINS AND APPURTENANCES

T2.01 Subsurface Investigation

The Contractor shall be responsible for having determined to his satisfaction, the nature and location of the work, and the ground conformation, the character and quality of the substrata, the types and quantity of materials to be encountered, the nature of the groundwater conditions, the character of equipment and facilities needed preliminary to and during the prosecution of the work, the general and local conditions and all other matters which can, in any way affect the work under this Agreement. The prices established for the work to be done will reflect all costs pertaining to that work.

The Contractor will notify the Engineer promptly in writing of any subsurface or adverse physical conditions at the site which differ materially from those that may be indicated by the Contract Documents or earlier subsurface information in accordance with Section I-2.01 of the Instructions to Bidders and Section G-2.04 of the General Provisions. The Engineer will promptly investigate the conditions and advise the Contractor in writing if further surveys or subsurface tests are necessary. If necessary, the Department will promptly obtain the necessary additional surveys and tests and furnish copies to the Contractor.

T2.02 Site Preparation

A) General

The construction site shall be cleared of all obstructions, stumps roots, and vegetation within the limits required for proper execution of the work in accordance with Section 110, FDOT Standard Specifications, latest edition, to a minimum depth of 12 inches.

Shrubbery, trees and plants shall be protected as required by the City of Tampa Parks Department ("Parks Department") or the agency having jurisdiction, as shown on the plans, or as directed by the Engineer. Where necessary to remove plantings in order to accomplish the work, such plantings shall be replaced. Trees will be transplanted when feasible, and when a successful transplant is probable. Plantings and trees shall be replaced before the work is accepted.

Foliage, trunks, and roots of trees to remain shall be barricaded by encircling with stakes and flagging at a distance equal to the branch spread or as required by the Parks Department. Stockpiling of materials and movement of equipment shall be avoided within this area. Interfering branches shall be removed without injury to trunks.

Trees, stumps, and large roots within the construction area shall be removed, unless otherwise directed. Topsoil shall be stockpiled for future use. Unsuitable materials shall be removed from the site and properly disposed of by the Contractor. All trees shall be preserved in their natural state unless their removal is directed by the Department. Trees within 20 feet of the construction line shall be protected as indicated on the plans or as directed by the Engineer. Trees with trunk diameters in excess of five inches (measured circumference three feet above ground level and divided by 3.14) shall be preserved unless:

A. their removal is directed;
B. they are located within areas scheduled to be paved; or
C. they interfere with utility or pipe trench alignment.

All trenching performed adjacent to tree trunks shall be accomplished in such a manner as to maintain a minimum clearance of at least 10 feet between the pipe and the base of the tree trunks for trees 5 inches in diameter and larger. A minimum of 20 feet clearance shall be maintained for tree trunks classified a grand tree by the Parks Department. When trenching is to be performed closer than the above minimums, root pruning or other protective measures as directed by the Engineer may be required. Tree trimming and root pruning shall be performed by a competent tree specialist who carries proper insurance and is licensed by the City of Tampa.

B) Tree Removal and Tree Trimming

Tree removal shall comply with the City of Tampa Tree Ordinance, City Code or ordinances, rules, or regulations of any other governmental agencies having jurisdiction. Within the limits of the water pipeline trench, all trees and roots which have been designated for removal, shall be removed and disposed of by the Contractor to allow for installation of the pipeline without hindrance. All removed trees and roots outside the trench area shall be cleared to a minimum depth of 12-inches below finished grade or as directed by the City. The Contractor shall notify the City when encountering material that is believed to qualify as Tree Removal. The Contractor shall give ample time for the City to inspect the location and make necessary measurements before removal.

After removing a tree, the Contractor shall not proceed with construction of the water pipeline without first restoring the tree removal location to an acceptable condition of repair which meets the City's approval. Satisfactory off site disposal of timber, stumps, roots or any other materials resulting from removal of trees or roots shall be the sole responsibility of the Contractor. Material shall not be burned or buried on the project site. The location of material disposal shall have the approval of the City. The method of material disposal shall be consistent with City of Tampa standards.

1. When located within the City of Tampa but outside the right-of-way, the following trees require no permit from the City based on Section 13-7, City of Tampa Code.

Australian Pine	Brazilian Pepper
Cherry Laurel	Chinaberry
Queensland Umbrella	Eucalyptus
Monkey Puzzle	Male Mulberry (No Berries)
Mimosa/Woman’s Tongue	Queen Palm
Wild Cherry	Citrus
Chinese Tallow	Surinam Cherry
Lead	Carrotwood
Rosewood	Earleaf Acacia
Golden Rain Tree	Shefflera
Silk Oak	Punk
Ear Tree	Eucalyptus

2. All trees to be removed from City rights-of-way shall require a tree removal permit issued by the Parks Department.

C) Tree Planting

Newly planted trees and shrubs will be kept well watered and shall be alive, healthy and vigorous at the

time of acceptance of the project by the City, or shall be replaced. Trees will be braced or tied to resist wind conditions until they have taken root.

T2.03 Dewatering

If subsurface water is encountered in trenching or structural excavation work, the Contractor shall adequately dewater the excavation at his expense. No additional payment shall be made for dewatering operations.

The contractor will be required to do any and all sampling that may be required to be in conformance with the NPDES discharge permit requirements, at no expense to the city.

Subsurface water shall be kept 2 feet or more below the working area until there is no danger of displacement of pipes or structures. All water collected and pumped shall be disposed of in a manner which will cause no health hazard, flooding or nuisance to the surrounding area and in a manner so as not to degrade the water quality of surrounding water or violate any environmental ordinances or requirements. Water containing debris, sand or heavy sediment shall not be discharged into the storm water system. All permits for the discharge of this water shall be obtained by the Contractor from the appropriate regulatory agency.

T2.04 Trenching, Backfilling and Compacting

Trenching shall be conducted to the limits and grades shown on the plans or as directed by the Department.

The Contractor performing trench excavation on this Contract shall comply with the Occupational Safety and Health Administration's (OSHA) trench excavation safety standards, 29 C.F.R., s.1926.650, Subpart P, including all subsequent revisions or updates to these standards as adopted by the Department of Labor and Employment Security (DLES) as well as The Florida Trench Safety Act as delineated in Florida Statute Chapter 553, Part III.

By submission of his bid and subsequent execution of this Contract, the Contractor certifies that all trench excavation done within his control shall be accomplished in strict adherence with OSHA trench safety standards, including all revisions and updates to these standards as adopted by the Department of Labor and Employment Security, as well as to The Florida Trench Safety Act as delineated in Florida Statute Chapter 553, Part III.

The Contractor also agrees that he has obtained or will obtain identical certification from his proposed subcontractors that will perform trench excavation prior to award of the subcontracts and that he will retain such certifications in his files for a period of not less than three years following final acceptance.

The Contractor shall consider all available geotechnical information in his design of the trench excavation safety system.

Dewatering operations shall be maintained until pipe laying is complete and the trench backfilled sufficiently to prevent movement or flotation of the pipe.

The use of trench-digging machinery will be permitted except in places where its operation will cause damage to other utilities, trees, buildings, or existing structures above or below ground; in which case hand methods will be employed.

The trench width and trenching method may vary with, and depend upon the depth of the trench and the nature of the excavated material encountered; but in any case shall be of ample width to permit the pipe to be laid and jointed properly and the backfill to be placed and compacted properly. The minimum width of unsheeted trench, at the bottom where the pipe is to be laid, shall be one foot greater than the nominal diameter of the pipe, except by consent of the Department. The maximum clear width of trench and the trench support system shall be in accordance with OSHA requirements. Where sheeting and bracing are used, the trench width shall be increased accordingly. Trench sheeting shall be cut off at a level of at least 1 foot above the top of the installed pipe and shall be left in place until the pipe has been laid, tested for defects, repaired if necessary, and until the earth around the pipe has been compacted to a depth of 2 feet over the top of pipe.

Unless otherwise specified, the trench shall be AWWA C600 Type 2 as shown on the Standard Details "Typical Trench, Bedding and Backfill Detail". The trench shall have a flat bottom conforming to the depth to which the pipe is to be laid. The pipe shall be laid upon sound soil, cut true and even, so that the barrel of the pipe will have equal bearing for its full length. Bell depressions of ample dimensions shall be dug at each joint to permit proper pipe jointing.

In the event the Contractor excavates below the elevation required without approval from the Department, he shall refill with approved material and thoroughly consolidate. If, in the opinion of the Engineer, the trench bottom cannot support the pipe, a further depth and/or width shall be excavated and refilled to pipe foundation grade or other approved means shall be adopted to assure a firm foundation for the pipe.

All excavated material shall be piled in a manner that will not endanger the work and that will avoid obstructing sidewalks and driveways. Gutters shall be kept clear or other satisfactory provisions made for street drainage. All material removed from the trench on an improved area shall be removed from the site by the Contractor at the Contractor's expense.

Material removed from an unimproved area may be reused if, in the opinion of the Engineer, it is

suitable and if local conditions permit reuse. All materials suitable for reuse must be stored separate from the general excavated material. All backfill material must be approved by Engineer prior to placement. If replacement backfill is required, the Contractor must supply the material at his expense.

Backfill material shall be free from cinders, ashes, refuse, organic matter, boulders, rocks or stones, or other material that in the opinion of the Engineer is unsuitable. Rocks up to 6-inches in their greatest dimension may be used for backfill from 1 foot above the top of the pipe up to the subgrade of the pavement unless otherwise specified by the Engineer.

All trenches shall be backfilled by hand, from the bottom of the trench to the centerline of the pipe in layers of 6 inches. Compaction shall be performed by tamping. Backfill material shall be deposited in the trench for the full width on each side of the pipe. From the centerline of the pipe to the specified grade, the pipe shall be backfilled by hand or by approved mechanical methods.

Compaction and consolidation shall be done in accordance with the requirements of the agency having jurisdiction. Unless requirements of the agency having jurisdiction are more stringent, all compaction shall conform to the following:

A. Impervious (paved) Surface Areas

The space between the pipe and the trench sides shall be packed full by hand-shoveled earth, free from lumps, carefully deposited in layers not exceeding 6-inches in depth. Such material shall be placed equally on each side of the pipe, and at the same time tamped in a manner acceptable to the Department, until enough fill has been so placed and compacted to the centerline of the pipe. From this point to 12 inches above the pipe, backfill shall be placed and compacted in uniform loose lifts no greater than 6 inches to a density that is at least 98% of the maximum modified proctor density (as determined by the Modified Proctor Density Test Method (ASTM D-1557)). The balance of the soils backfilled from this point to the top of the trench shall be placed and compacted in loose lifts not to exceed 12 inches to a density at least 98% of the maximum modified proctor density.

B. Pervious (non-paved) Surface Areas

The space between the pipe and the trench sides shall be packed full by hand-shoveled earth, free from lumps, carefully deposited in layers not exceeding 6-inches in depth. Such material shall be placed equally on each side of the pipe, and at the same time tamped in a manner acceptable to the Department, until fill has been placed and compacted from the bottom of the trench to the centerline of the pipe. From this point up to grade, backfilled soils shall be placed and compacted in uniform loose lifts no greater than 12 inches, to a density that is at least 95% of the maximum density as determined by the Modified Proctor Density Test (ASTM D-1557).

T2.05 Pipeline Installation

A) General

During shipping, delivery and installation of pipe and accessories, materials shall be handled in such a manner as to prevent any damage. Particular care shall be taken not to injure pipe coatings. All pipe, fittings, valves and other material shall be subject to inspection and acceptance by the Department after delivery and no broken, cracked, misshapen, imperfectly coated, or otherwise damaged or unsatisfactory material shall be used. When a defect is discovered, the damaged portion shall not be installed. With the Department's approval, cracked pipe shall have the defect cut off at least 12 inches from the break in the sound section of the barrel.

Installations shall be according to AWWA Standard C600 (ductile iron pipe), AWWA C605 (PVCP pipe), AWWA C906 (PE pipe), AWWA Manual of Water Supply Practices M55 (PE Pipe Design and Installation), ASTM F2164-02 (Field Leak Testing of PE Pipe), pipe manufacturer's recommendations, and as described in these technical specifications. Disinfection of all water mains shall be in accordance with AWWA C651.

All connections to existing piping systems shall be made as shown or indicated on the plans after consultation and cooperation with the Department. No such connection shall be made until all requirements of these specifications as to tests, cleaning, flushing and disinfection of new work have been met, and the planned cut-in to the existing line has been approved by the Department. Where connections are made between new work and existing work, the connections shall be made in a thorough and workmanlike manner using proper fittings and specials. Some such connections may have to be made during off-peak hours if required by the Department.

B) Underground Pipelines

Proper implements, tools and facilities satisfactory to the Department shall be provided and used. Pipe, fittings, valves and appurtenances shall be carefully lowered into the trench piece by piece. Under no circumstances shall piping materials be dropped or dumped into the trench. Pipe and fittings shall be carefully examined for cracks and other defects while suspended above the trench immediately before installation in final position. If damage occurs to any pipe, fitting, valve or piping accessory in handling, the damage shall be immediately brought to the Engineer's attention. The Engineer shall prescribe corrective repairs or rejection of the damaged items.

Lumps, blisters and excess coating shall be removed from the bell- and-spigot end of each pipe. The outside of the spigot and the inside of the bell shall be wire brushed and wiped clean, dry and free from oil and grease before the pipe is laid. Pipe joints shall be made up in accordance with manufacturer's recommendations.

For DIP and PVCP, upon satisfactory excavation of the pipe trench and completion of the pipe bedding, a

continuous trough for the pipe barrel and recesses for the pipe bells, or couplings, shall be excavated by hand digging. When the pipe is laid in the prepared trench, true to line and grade, the pipe barrel shall receive continuous, uniform support and no pressure will be exerted on the pipe joints from the trench bottom. All ductile iron pipe shall be wrapped in polyethylene encasement (polywrapped) as shown in the Standard Detail. The polywrap and tape shall be blue for potable water and green for sanitary sewer force mains.

Pipe manufactured from materials, which are classed as flexible for purpose of pipe design shall be bedded true to line and grade with uniform and continuous support from a firm base and installed in accordance with manufacturer's recommendations. Blocking shall not be used to bring the pipe to grade. Backfill material shall be properly placed and compacted to provide lateral restraint against deflection in the pipe diameter. Care shall be exercised to avoid contact between the pipe and compaction equipment.

Pipe interior surfaces shall be thoroughly cleaned of all foreign matter before being gently lowered into the trench and shall be kept clean during laying operations by means of plugs or other approved methods. Pipe 12-inches in diameter and smaller may be cleaned by flushing in place under the supervision of the Engineer if in the Engineer's opinion the pipe contains dirt that can be so removed; if not, then the pipe shall be cleaned by swabbing and flushing before it is placed in the trench. All pipe 12-inches in diameter and larger shall be thoroughly cleaned, by appropriate means, before placing it in the trench. During suspension of work for any reason at any time, including the end of each workday, a watertight plug shall be placed in the end of the pipe last laid to prevent mud or other foreign material from entering the pipe. Sufficient backfill material shall also be placed over the pipe to prevent flotation. Lines shall be laid straight and depth of cover shall be maintained uniformly with respect to finished grade, whether grading is completed or proposed at time of pipe installation. Pipelines shown on the plans to be laid at grade or with a specified slope shall be installed with the invert conforming to the required elevations, slopes and alignment shown and with the pipe bottom uniformly and continuously supported by a firm bedding and foundation. Pipe installed using horizontal directional drill will be installed within the tolerance outline herein.

The work shall at all time progress with caution so as to prevent damage to underground obstructions, both known and unknown. Should an obstruction not shown on the plans be encountered, the Engineer shall be immediately notified so that alteration to the plans can be made should realignment be necessary. The Contractor shall notify the Engineer far enough in advance to allow the realignment to be accomplished by deflection in the pipe joints or adjustment in the drilling operation.

Ductile iron pipe and PVC pipe shall be laid with bell ends facing in the direction of pipe-laying (upstream) unless directed otherwise by the Department. Only EPDM gaskets will be used for PVC pipe and ductile iron pipe. Wherever it is necessary to deflect pipe from a straight line, either in the vertical or horizontal plane, the amount of deflection allowed shall not exceed 80% of that allowed under AWWA Standard C 600 (DIP) for the type of joint being installed and in accordance with the manufacturer's recommendations.

Only after the pipe has been properly homed will it be allowed to be deflected. No deflection will be allowed in PVC pipe joints – however, longitudinal bending of PVC pressure pipe in conformance with AWWA C605 will be allowed.

Water mains crossing or parallel to storm sewer, sanitary sewer and gas mains shall have a minimum of 12 inches vertical clearance and a horizontal clearance which shall comply with all State, Local and Federal regulations and requirements. A minimum 3-foot pipe wall to pipe wall clearance shall be maintained between all utilities and water main. Any exceptions to these standards must be approved in advance by the Engineer. When crossing or parallel to storm sewer and sanitary sewer mains, including gravity sewers and force mains, with less than the minimum clearances, the Contractor shall protect the water main as shown on the plans or, in a manner acceptable to the Engineer. Where ductile iron or PVC pipe water mains are crossing sewer service laterals with less than the require 12 inch minimum clearance, the Contractor shall make the necessary adjustments to center a full joint of water main (18' min.) at the conflict point, or replace 10 feet of the lateral with PVC pipe meeting AWWA C-900 Class 150 centered over the conflict point. Sewer laterals, when replaced, shall be installed in accordance with the City of Tampa Department of Sanitary Sewers technical manual, latest edition.

1. Thrust Restraint

All plugs, caps, hydrants, tees, bends and other fittings on pressure pipelines shall be provided with restrained joints as indicated on the plans, or as directed by the Engineer. Thrust blocks or reaction blocks may only be used when approved in advance by the Engineer.

2. Joints

The joints of all pipelines shall be made absolutely tight. The particular joint used shall be acceptable to the Department prior to installation. The gasket material for all joints shall be EPDM and shall be properly positioned before the pipe is lowered into the trench. The joining of the pipe shall proceed in accordance with the manufacturer's requirements.

a) Push-on Joints

In making up the push-on type joint, the EPDM gasket shall be placed in the socket with the large round end entering first so that the groove fits over the bend in the seat. A thin film of lubricant (approved by the manufacturer) shall then be applied to the inside surface of the gasket that will come in contact with the entering pipe. The plain end of the pipe to be entered shall be thoroughly brushed with a wire brush and placed in alignment with the bell of the pipe to which it is to be joined. The joint shall be made up by exerting sufficient force on entering pipe so that its plain end is moved past the gasket until it seats as per manufacturer's recommendations. Backhoe buckets or excavation equipment shall not be applied directly to the pipe.

b) Mechanical Joints

Where shown on the plans, or where in the opinion of the Department, settlement or vibration is likely to occur, all pipe joints of pressure pipelines shall be bolted mechanical type as specified herein.

Mechanical joints shall be made up using high-strength, low- alloy steel bolts and rubber gaskets having either plain or duck tip as recommended by the manufacturer. All types of mechanical joint pipes shall be laid and jointed in full conformance with the manufacturer's recommendations. Only especially skilled workmen shall be permitted to make up mechanical joints.

Mechanical joints shall be centered in the bells. Soapy water shall be brushed over the gasket just prior to installation. The EPDM gasket and gland shall be placed in position, the bolts inserted, and the nuts tightened finger tight. Mechanical joints shall be assembled in accordance with AWWA Standards. The joints shall be tightened on opposite sides of the pipes by means of a torque wrench in such a manner that the gland shall be brought up evenly into the joint. The following range of bolt torques shall be applied:

Bolt Size (Inches)	Range of Torque
3/4" diameter	85 to 95 ft.-lbs.
1" diameter	95 to 100 ft.-lbs.

If effective sealing is not obtained at a maximum torque listed above, the joint shall be disassembled and reassembled after thorough cleaning. If the joint is defective, it shall be cut out and entirely replaced or if the Department gives permission, it may be repaired by a suitable clamp.

3. Plugs and Caps

Plugs shall be inserted into the bell ends of all open ductile iron pipe, tees or crosses. All plain ends of pipe and fittings shall be capped.

4. Completion

After the pipe (DIP or PVC) has been installed, inspected by the Engineer and found to be satisfactory, sufficient backfill shall be placed along the exposed areas of pipe to hold it securely in place while conducting the preliminary hydrostatic test. No backfill shall be placed over the ductile iron pipe joints until the preliminary test is satisfactorily completed, leaving them exposed to view for the detection of visible leaks.

Upon satisfactory completion of the preliminary hydrostatic test, backfilling shall be completed.

C) Underground Pipelines-Horizontal Directional Drilling

HDPE pipeline installations shall be in accordance with AWWA C906 (HDPE pipe), AWWA Manual M55 (PE Pipe Design and Installation), ASTM F2164-02 (Field Leak Testing of PE Pipe), pipe manufacturer's recommendations, and as described in these technical specifications. PVC pipeline installations shall be in accordance with AWWA C605, AWWA C900 (or C905), pipe manufacturer's recommendations, and as described in these technical specifications

Horizontal Directional Drilling

The work specified in this section consists of furnishing all labor, equipment and certain materials and services necessary to install water lines using the horizontal directional drilling (HDD) method of installation, also known as directional boring, of HDPE or PVC pipe. Fittings, valves and appurtenances shall be carefully lowered into the trench piece by piece. Proper implements, tools and facilities satisfactory to the Department shall be provided. Under no circumstances shall piping materials be dropped or dumped into the trench or on the ground. Pipe and fittings shall be carefully examined for cracks and other defects while suspended above the trench immediately before installation in final position. The dragging of HDPE pipe along asphalt or concrete will not be allowed. The Contractor will use above ground rollers or may suspend it to move into position. If damage occurs to any pipe, fitting, valve or piping accessory in handling, the damage shall be immediately brought to the Engineer's attention. Sections of HDPE pipe with cuts or gouges exceeding 10 percent of the pipe wall thickness or kinked sections shall be cut out and the ends rejoined at no additional cost to the Water Department. The Engineer shall prescribe corrective repairs or rejection of the damaged items.

1. Preconstruction Responsibilities

a) The minimum ground cover over directionally bored water utility lines shall be 36 inches unless otherwise shown on the plans or directed by the Engineer. There shall be at least 12 inches vertical clearance when any water main crosses under a storm sewer or sanitary sewer.

b) The Contractor shall limit curvature in any direction to reduce force on the pipe during pullback. Ideally, the directional bore should lie in a vertical plane. The minimum radius of curvature shall be no less than that specified by the pipe manufacturer.

c) The Contractor shall submit design calculations indicating predicted/permissible (maximum safe) pull force, pipe pull rating, and minimum permissible pipe bend radius. Maximum safe pull force shall be included in the submittal. The Contractor assumes all responsibility for proper design of the directional bore. Some factors to be considered in calculating the safe pull force follow:

(1) The pullback force will be calculated at the leading end of the pipe behind the pulling head.

(2) The frictional resistance is highest just prior to movement and decreases with movement. When pullback ceases, frictional forces and drag forces increase due to the thixotropic nature of drilling mud. The mud starts to gel when it is undisturbed.

(3) Buoyant force pushes the pipe up against the top of the borehole, creating frictional drag between the pipe and the borehole.

(4) Minimum radius of curvature at the entry and exit pits and throughout the directional drill is limited by the steering capabilities of the boring equipment and the pipe manufacturer's requirements.

(5) When the bending radius is too small, the safe pulling strength of HDPE pipe may be significantly reduced by the additional tensile stresses due to curvature.

(6) All bending stresses due to various curvatures in the boring path are additive and should be subtracted from the safe pull force.

(7) The “safe” pull-load is time dependent.

2. Contractor Responsibilities

a) Contractor shall supply all labor, supervision, tools and equipment, and materials necessary to install pipe by directional bore method for potable water. Installation of the pipe system includes the installation of water mains, services and/or any other devices or materials deemed necessary for the respective systems and as directed on the plans.

b) The Contractor shall provide experienced operators to perform directional boring. The Contractor shall have a minimum of four years of experience with similar construction including pipelines. The Contractor shall have performed at least three successful directional drills in each of the tube and pipe diameters specified. Each bore shall have been a minimum of 150 feet in length and shall involve the use of HDPE or PVC pipe. In addition, the Contractor shall have at least 2 years of experience installing potable water lines. References, project scope and owners contact information for each of the aforementioned projects for both directional drill and potable water work shall be furnished to the Engineer prior to the award of this contract.

c) The Contractor shall be fully responsible for placement of the pipe per the contract documents.

(1) The Contractor shall supply experienced persons who have received proper training in the use of the butt fusion equipment according to the recommendations of the pipe manufacturer and butt fusion equipment supplier to perform thermal fusion of the specific HDPE or PVC pipe to be used.

(2) Contractor shall supply experienced persons who have received proper training in the use of the electrofusion equipment according to the recommendations of the pipe and fittings manufacturer and electrofusion equipment supplier to perform thermal fusion of the specific HDPE or PVC pipe and fittings to be used.

(3) The as-built variance from the specified bore path shall not exceed plus or minus one (1) foot in the vertical plane and plus or minus one (1) foot in the horizontal plane. The Contractor shall notify the Engineer prior to start of the boring operation if these tolerances cannot be met.

3. Equipment

a) The directional drilling equipment shall consist of directional-drilling machines capable of handling the HDPE or PVC pipe specified. It will be of sufficient capacity to perform the bore, pull back the pipe and shall have a drilling fluid mixing, delivery and recovery system of sufficient capacity to successfully complete the project, a drilling fluid recycling system to remove solids form the drilling fluid so that the fluid can be reused, a guidance system to accurately guide the boring operations and a vacuum truck of sufficient capacity to handle the drilling fluid volume. All equipment shall be in good, safe operating condition with sufficient supplies, materials and spare parts on hand to maintain the system in good working order for the duration of this project.

(1) The steerable, horizontal directional drilling equipment shall produce a stable fluid lined tunnel with a minimum burial depth of cover of 36-inches for the carrier pipe installation. The system must be able to control the depth and direction of the pipe and must be accurate to a window of ± 2 inches.

(2) The tunneling equipment shall employ drilling fluid that is inert and shall pose no environmental risk and shall be material such as bentonite or a polymer-surfactant mixture producing a slurry of proper consistency.

(3) The hydraulic power system shall be self-contained and free of leaks, with sufficient pressure and volume to power the drilling operation.

(4) Calibration of the electronic detection system shall be verified by either uncovering the tool (head) within the first ten (10) foot of the bore or by verification above ground prior to the start of the bore.

(5) The boring tool (head) shall be remotely steerable by means of an electronic or magnetic detection system. The tool (head) location shall be monitored in three dimensions (offset from the baseline, distance along the baseline and depth of cover) and logged every 50 feet from the drilling machine. This log shall be used to produce an as-built which will be submitted to the Water Department at the conclusion of the project. The boring tool shall pull the carrier pipe through the fluid lined tunnel as it traverses the surface being crossed.

(6) The machine shall have means to monitor and record the maximum pullback force during the pullback operation. The pulling strength of the boring equipment shall not exceed the HDPE or PVC pipe safety pull strength as per the manufacturer’s recommendation.

b) The butt fusion machine used to join sections of HDPE or PVC pipe shall have controls and gauges for setting pressures and temperatures used for facing, heating, and fusing.

(1) Facing shall be conducted at a pressure that produces properly faced (squared and true) pipe ends.

(2) Heating pressure should be set so that the pipe ends maintain contact against the heater, but are not forced against the heater (no "contact pressure").

(3) Fusing pressure shall be as recommended by the pipe manufacturer and fusion equipment supplier.

(4) Heater surfaces must be clean and free of contaminants such as dirt, oil, grease, and melted or charred plastic. To clean the heater, only wooden implements and clean, dry, lint-free non-synthetic cloths may be used.

(5) The heater shall be checked periodically for uniform surface temperature using a surface pyrometer.

c) An electrofusion machine shall be used to fuse fittings and accessories to pipe. The machine shall be approved for use by the manufacturer of the pipe and the fittings.

4. Directional Bore Pipe and Fittings

HDPE and PVC pipe for directional bores and all associated HDPE fittings (MJ adapters, solid couplings, tapping tees, corporations, flange adapters, etc.) will be furnished by the Contractor as part of the appropriate unit priced pay item.

a) Pipe and fittings shall be High Density Polyethylene (HDPE) as per AWWA C906. All HDPE pipe

shall be pressure class 160 psi, DR 11, and PE code 4710. PVC pipe shall be AWWA C900/C905 PVC, DR 18, and pressure class 235.

b) Pipe shall be blue, or color-coded blue, to provide identification. Color-coding shall be made by co-extrusion or impregnation and shall consist of stripes running along the entire outside length of the pipe, not more than 120 degrees apart or fully colored co-extruded.

Markings shall include but not necessarily be limited to the following:

- Nominal size and OD base.
- Standard material code designation.
- Dimension.
- Pressure class.
- AWWA designation (AWWA C906 or C900 or C905).
- Material test category of pipe.

5. Tracer Wire

a) All plastic piping shall be installed with two continuous, insulated, blue coated, solid #10 gauge UF (Underground Feeder per National Electric Code Article 339) copper tracer wires for water main location purposes by means of an electronic line tracer. The wires must be installed along the entire length of the pipe. The insulation shall be blue in color. Sections of wire shall be spliced together using Burndy YSV14 connectors or other approved method for splicing. Twisting the wires together is not acceptable. Wire ends shall terminate in curb stop boxes installed in concrete valve box pads per Standard Construction Detail 7.02 and 8.07.

b) Upon completion of the directional bore, the Contractor shall demonstrate to the Water Department that the wire is continuous and unbroken through the entire run of the pipe by providing full signal conductivity (including splices) when energizing for the entire run in the presence of the Engineer. If the wire is broken, the Contractor shall repair or replace it. No payment will be made for pipe installed until the wire passes a continuity test.

6. Fittings and Restrainers

a) Pipe flange joints shall be made using a flanged adapter, which is butt fused to the HDPE pipe.

(1) A back-up ring shall be fitted behind the flange adapter sealing surface flange for bolting to the mating flange. Standard back-up rings shall be AWWA C207 Class D for 160 psi and lower pressure ratings.

(2) One edge of the back-up ring shall be chamfered to fit up against the back of the sealing surface flange.

b) Connections between HDPE and mechanical joints shall be made using an HDPExMJ adapter. The MJ adapter shall be fused to the HDPE pipe on one end. The other end of the adapter will be inserted into the MJ fitting. The fitting shall be fully restrained by the installation of an MJ gland or back-up ring behind the adapter flange as the MJ gland or back-up ring is tightened in place.

(1) Properly installed, the joint shall be a watertight and restrained joint.

c) Electrofusion Couplings may be used to join two sections of HDPE pipe together when there is a space constraint that precludes butt fusion.

(1) The electrofusion coupling will be made of HDPE and will incorporate a constant 40-volt fusion coil for purpose of joining the ends of the pipe.

(2) The electrofusion coupling will be installed in conformance with the manufacturer's requirements and recommendations.

d) When connecting HDPE pipe with ductile iron fittings, the angle of entry into the fitting shall not exceed four degrees or 80% of the allowable deflection angle as determined by AWWA C-600. In the event that the entry angle at the point of connection exceeds four degrees of deflection, additional bends shall be installed.

7. Maintenance of Traffic

Erection or installation of appropriate safety and warning devices in conformance with the governing right-of-way authority shall be the responsibility of the Contractor.

8. Construction Requirements

a) General

All directional bore operations shall be contained within rights-of-way and/or easements shown on the plans. Bores may not start after 1:00 PM unless approved in advance by the Engineer.

b) Contractor Responsibilities

(1) The Contractor shall provide the following materials and services for horizontal directional drill installations unless otherwise specified by the Engineer.

- Traffic control.
- Tracer wire for carrier pipe (#10 gauge or larger, solid), per Standard Detail.
- Site preparation and excavation.
- Dewatering – Groundwater Pump or Well Point System as needed.
- Sheeting and shoring, as necessary.
- HDPE pipe sized in accordance with the plan drawings.
- All butt fusion welding and electrofusion welding.
- Tie-in to existing pipelines with HDPE, if called for in the plans.
- Preliminary site restoration (fill open pits, grading).
- Site clean-up including removal and proper disposal of all waste materials and drilling fluid.
- All HDPE fittings, HDPE couplings, and HDPE carrier pipe and all ductile iron pipe, fittings, appurtenances and valves.
- Final site restoration (sod, seed, mulch, concrete/ asphalt repair).

(2) The Contractor shall ensure that the following items are properly monitored and controlled:

- Calibrate locator/tracking system.
- Ensure that the flow of lubricating fluid (i.e. "Bentonite", etc.) is continuous.
- Ensure pulling pressure does not
- exceed pipe manufacturer's specifications.
- Fusing of pipe is within pipe manufacturer's specifications.
- Post fusion cool down time is calculated and complied with.
- Pipe is fused prior to the start of any bore longer than 100 feet.

(3) The Contractor shall record horizontal offset from the plan baseline and depth measurements every fifty (50) feet over the course of the bore and provide that data to the City along with a complete as-built. All valves, fittings, points of connection and horizontal or vertical changes from the plans shall also be referenced and shown on the as-built. Data collected by the Engineer does not relieve the Contractor from the responsibility of recording his own data. The Contractor shall log all necessary data from the locator/tracking system:

- Position.
- Roll Angle.
- Tilt Angle.
- Depth.
- Temperature of Data Transmitter.
- Remaining Battery Life.
- Pull Back Force (Maximum pull back force shall be recorded).

(4) The Contractor shall call “Sunshine State One-Call” (phone number: 800-432-4770) at least 48 prior to performing any excavation. The Contractor shall confirm the location of utilities before starting the directional bore.

(5) The Contractor shall perform the horizontal directional drill in accordance with the approved project plans. In no case shall the bore extend into private property unless an easement is provided prior to start of construction or the Contractor has obtained a temporary construction easement from the property owner. Vertical tolerances shall be within plus or minus 1 foot of elevations shown on drawings. Horizontal tolerances shall be plus or minus 1 foot of alignment shown in drawings. These tolerances shall be met unless required separations for other utilities must be met and puts the bore in conflict. Failure to meet tolerances, if not pre-approved by Engineer, may be grounds for rejecting the bore. The Contractor may, at the discretion of the Engineer, be required to abandon the bore and re-drill a new one at Contractor’s own expense.

(6) The Contractor shall provide all structures, safety equipment, and professional services required for the health and safety of the general public and of personnel involved in directional boring work in accordance with the requirements of the Federal, State, and Local Authorities. This includes proof of construction personnel certificates of trench safety training at the time of construction.

(7) The Contractor shall take all measures necessary to protect surrounding public and private property, adjacent buildings, roads, drives, sidewalks, drains, sewers, utilities, trees, structures, and appurtenances from damage due to directional bore work.

(8) The Contractor shall exercise due care at all times and shall not apply more than the safe pull force to the carrier pipe recommended by the manufacturer.

(9) The Contractor shall furnish and install two, insulated, blue coated #10 gauge <u>solid</u> strand copper tracer wires as previously specified herein.

(10) The Contractor shall give 48-hour (two working days) advance notice to the Water Department prior to start of work. The Engineer is required to inspect materials prior to the start of the boring operation and to be on site during the boring operation and installation of the pipe.

(11) The Contractor shall be fully responsible for all steerable, fluid lined directional-boring operations. Any noticeable surface defects resulting from operation of this boring equipment shall be repaired by the Contractor at his own expense. The Contractor is reminded that he is required to take preconstruction videos of the construction site to avoid unwarranted claims for damages resulting from the construction.

(12) The Contractor shall meet all City insurance requirements, as outlined in this document, when working in a City right-of-way or using a City right-of-way use permit.

c) The Water Department shall supply the following materials:

- Large meters
- Small meter for large meter by-pass lines
- Small meters
- Double detector check valve assemblies

d) The Engineer shall witness and verify the Contractor's logging of pertinent data. The Engineer may log his own data in the Department’s own Directional Bore Log sheet for the Department's use.

e) Drilling Requirements

(1) The horizontal alignment shall be as shown on the drawings, plus or minus 1 foot. The vertical alignment shall be as shown on the drawings, plus or minus 1 foot. If the Contractor cannot meet these tolerances for whatever reason, he shall confer with the Engineer prior to the start of the bore. The Engineer may approve or disapprove variance requests at his discretion.

(2) All HDPE pipe and tubing and PVC shall have a minimum of 36 inches cover unless otherwise indicated on the plans or directed by the Engineer.

(3) Compound curvatures shall be minimized limited by the maximum deflection as set forth by the HDPE or PVC pipe manufacturer, or AWWA Standards, whichever is more stringent.

(4) The entry angle shall be 12° to 14° (not to exceed 15°). Exit angle shall be 6° to 12° to facilitate the pullback operation. Entry and exit angles are defined as angles from the horizontal. Connection angles between HDPE and PVC pipe and ductile iron fittings shall not exceed 4 degrees.

(5) Erosion and sedimentation control measures and on-site containers shall be installed to prevent drilling mud from spilling out of entry and/or exit pits. Drilling mud will be disposed of off-site in accordance with local, state and federal requirements and/or permit conditions. No other chemicals or polymer surfactant shall be added to the drilling fluid without written consent of the Engineer or until a determination is made by the Engineer that the chemicals to be added are not harmful or corrosive to the facility and are environmentally safe.

(6) Pilot holes shall be drilled on bore path with no deviation greater than plus or minus 1

foot from the design depth over a length of 100 feet. In the event that the allowable deviation is exceeded, the Contractor shall notify the Engineer, and the Engineer may require the Contractor to pull back and re-drill from a location along the bore path before the deviation.

(7) After successfully completing the pilot hole, the borehole shall be reamed to a diameter, which is, at minimum, 25 percent greater than the outside diameter of the pipe being installed.

(8) The Contractor shall not attempt to ream at a rate greater than the drilling equipment and mud system are designed to safely handle.

(9) In the event of a drilling hole blowout or other loss of drilling fluid, the Contractor shall be responsible for restoring any damaged property to original condition and cleaning up the area in the vicinity of the blowout or loss.

f) Pipe Installation

(1) After reaming the borehole to the required diameter, the pipe shall be pulled through the hole. There shall be a swivel and barrel reamer to compact the bore hole walls at the front of the pipe.

(2) Once pullback operations have commenced, the operation shall continue without interruption until the pipe is completely pulled into the borehole. **EXCEPT FOR DRILLING ROD REMOVAL, PULLBACK SHALL NOT CEASE, UNTIL THE PIPE IS COMPLETELY PULLED INTO ITS PERMANENT POSITION**. During the pullback operations, the Contractor shall apply no more than the maximum safe pipe pull pressure as detailed in the approved submittals.

(3) After pullback, HDPE pipe may take several hours or days to recover from the axial strain, or to “relax”. When pulled from the reamed bore hole, the pull-nose shall be pulled out a distance longer than the total length of the pull to avoid having the pull-nose retract back below the bore hole exit level due to stretch recovery and thermal contraction to equilibrium temperature. No connections shall be made until the stretch recovery and thermal contraction cycles are complete.

(4) The pipe entry area shall be graded as needed to provide support for the pipe and to allow free movement into the borehole. The pipe shall be guided into the borehole to avoid deformation of, or damage to, the pipe. Under no circumstances shall the pipe be dragged over an asphalt or concrete surface; above ground rollers or other similar devices shall be used to support the pipe while it is being moved across such surfaces.

(5) The pipe shall be installed in a manner that does not cause upheaval, settlement, cracking, and movement of distortion of surface features. Any damages caused by the Contractor’s operations shall be corrected by the Contractor at no cost to the Water Department.

(6) In the event that unexpected subsurface conditions impeding drilling operations are encountered, the procedure shall be stopped and not continued until the Engineer has been consulted. The pipe may be installed full of water.

(7) If the final grade of the finished bore is not satisfactory to the Engineer or any other jurisdictional entity, the pipe shall be abandoned, full pressure grouted in place in accordance with the jurisdictional authority, and an alternate installation shall be made. The abandoned pipe shall be properly shown on “as-built” drawings to be submitted following conclusion of the construction work.

(8) The Engineer shall inspect the installed pipe ends for roundness and/or damage. Evidence of over-pulling or significant surface scratching shall be brought to the attention of the Engineer. Deformations of more than 10 percent may be grounds to abandon the bore and have the Contractor re-drill another line at no additional cost to the Water Department.

g) Butt Fusion Procedure

(1) Fusion welds shall be performed by an experienced technician who has been properly trained to meet the pipe manufacturer’s procedures. All welds shall meet the pipe manufacturer’s recommendations.

(2) As the pipe ends are melted against the heater during the heating period, the molten plastic will swell and form melt beads around the pipe ends. The melt beads shall be the same size on both pipe ends, and uniformly sized all the way around.

(3) After melting has been completed, the ends shall be separated just enough to remove the heater, observed for uniformity of the beads and quickly (within three seconds) brought together with the recommended pressure.

(4) If melted plastic sticks to heater, the two ends may not be joined. The ends shall be allowed to cool and the procedure started over.

(5) Excess pressures shall not be used as this will squeeze too much melt out of the fusion area and result in a weakened joint.

h) Connecting Two Adjoining Sections of Directionally Bored Pipe

(1) If the overall length of the required utility installation cannot be safely pulled using one directional bore, then the Contractor shall be required to make more than one pull to accomplish the installation.

(2) Where two adjacent pulls meet, the Contractor shall dig a pit and join the two sections together at the elevation of the two segments as if it were a continuous pull-in. Space permitting, the Contractor may butt fuse the sections of pipe together. If space is not adequate to permit butt fusion, the two sections of HDPE shall be joined together using an electrofusion solid coupling. This coupling shall be installed in conformance with the coupling manufacturer’s recommendations and these documents.

(3) The Contractor may perform a preliminary pressure test on the completed string of pipe prior to installation. A pressure test shall be required on the completed directional bore prior to final acceptance.

i) Disinfection

Disinfection of directionally drilled water mains shall be in accordance with AWWA C651, and as outlined in these specifications.

j) Post-Construction

The Contractor shall be considered as having completed the requirements of the directional bore when he has successfully completed the work to the satisfaction of the Engineer.

k) As-Builts

When the directional bore is completed, the Contractor shall interpret the information from the data log sheets and produce marked-up as built drawings. The redline drawings and as-built will reflect horizontal offset from the baseline and depth of cover, every 50 feet and at all changes in direction, whichever is less. All fittings, valves, hydrants, meters meter services will also be referenced and shown. This document, along with the tracking log sheets, will be provided to the Engineer for his review and approval.

9. Directional Drilled Pipeline Testing

The Department will require the Contractor to perform the required tests to ensure that all pipe installed including service lines meets the Department's standards.

(1) Flushing. The pipe shall be thoroughly flushed prior to testing, with flow velocities sufficient to flush any foreign material from the pipeline. Flushing shall be continued until the discharge appears clean; however the minimum flushing duration shall be no less than three changes of tested pipeline volume.

(2) Filling. The pipeline shall be filled slowly. Air valves at high points shall be opened to allow air to escape as the water level increases inside the pipeline. If permanent air valves are not required at all high points, the Contractor shall install temporary valves at these points to expel air during filling. Loosening flanges or connections to bleed air from the system is prohibited. A typical maximum filling rate for a pipe system with 2-inch air valves is 2 ft^3/sec.

(3) Hydrostatic (Pressure) Testing

All newly laid ductile iron pipe (including fittings and valves) shall be pressure tested in accordance with AWWA Standard C600 and these documents where applicable. All newly laid PVC pipe (including fittings and valves) shall be pressure tested in accordance with AWWA Standard C605 and these documents where applicable. HDPE pipe shall be tested in accordance with AWWA Manual M55, and ASTM F2164-02.

It should be note that ASTM F2164 is a field leak testing procedure, not a pressure test of the system. In PE piping systems, field pressure tests cannot be used to determine system pressure capacity, due to expansion of the material. Under no circumstances should the total time for pressurization and time at test pressure exceed eight hours at 1.5 times the system pressure rating. If the test is not completed within this total time, the test section should be depressurized and allowed to “relax” for at least eight hours before starting the next testing sequence.

The Contractor shall provide all necessary equipment and instrumentation (pressure gauges, volume gauges, hoses pumps, test pipe, test fittings, etc.) required for flushing and testing of the piping systems. Pressure gauges shall be marked in graduated increments that do not exceed 2 pounds per square inch. Gauges used to measure the volume of water necessary to raise post-test line pressure back to the highest pressure achieved during the test duration will be marked in graduated increments which do not exceed 5 ounces. If requested by the Engineer, the Contractor shall furnish to the Engineer certified test data for the pressure gauges and recorders used on hydrostatic equipment.

Water for test purposes will be supplied by the Department. At the option of the Engineer, flow meters and/or pressure gauges used on hydrostatic testing equipped with approved strip or round chart recorders shall be supplied by the Contractor. Tests shall be made in sections not to exceed 1/2 mile. Testing shall be conducted in the presence of and to the satisfaction of the Engineer as a condition precedent to the approval and acceptance of the system. Not less than 3-days of notice shall be given prior to start of such tests, and such testing shall not be scheduled until the Contractor has indicated that

the test section is ready for testing. The schedule and procedures for testing shall be determined by the Contractor and reviewed with the Engineer prior to testing.

If valves are installed on the directional drilled pipeline, test shall be made between valves to demonstrate the ability of the valve to sustain pressure. All piping systems shall be tested in accordance with these test methods in addition to any other tests required by local plumbing codes or building authorities.

The Contractor is warned that pressure testing against existing valves is done at his own risk. Failure of these valves to hold test pressure will not relieve the Contractor of the pressure testing.

Before conducting the test, the Contractor shall backfill all pipe and reaction blocking unless the Engineer directs certain joints or connections to be left uncovered. When reaction blocking is provided, the pressure test shall not be made until adequate curing time for the blocking has been allowed.

Before application of the test pressure, all air shall be expelled from the pipe. To accomplish this, taps will be made, if necessary, at points of highest elevation and afterward tightly stopped with tapered brass plugs, all at the Contractor's expense.

Pressurization (the initial expansion phase) of each HDPE pressure test section shall be at least 4-hours with a minimum test pressure in excess of 150 psi. Pressurization of PVC pipe shall be as required to flush the pipe of air and fill it with water. Contractor shall add make-up water as necessary to maintain maximum test pressure for 4-hours for HDPE, or to maintain pressure 2-hours to test PVC pipe. At no time shall the test or line pressure exceed 190 psi. If required by the Engineer, pump test equipment will be equipped with pressure relief valves pre-set to 190 psi. Each valved section of pipe shall be slowly filled with water and a pump shall be connected to the low point of the section being tested.

Throughout the duration of pressurizing HDPE pipe or testing PVC pipe, the Contractor is required to maintain a minimum pressure in excess of 150 psi in PVC pipe. The Contractor is advised that, should the test pressure fall to or below 150 psi any time during the 4-hour HDPE pressurization (or the 2-hour test, if PVC), the test will be considered invalid and a retest will be required.

At the end of the pressurization period, the Contractor will be required to pump the lines back up to the highest pressure obtained during the pressurization period, to begin the next phase of the pressure test - the test phase. For HDPE pipe, begin the test phase by reducing the test pressure by 10 psi, and monitor for 1 hour. Do not increase pressure or add makeup water. For PVC pipe, monitor for 2-hours, adding water as required to maintain the pressure to within +/-5 psi of the stabilized pipe pressure.

(2) Acceptance criteria.

(a) HDPE: If no visual leakage is observed during the 1-hour test phase period, and pressure during the test phase remains steady (within 5% of the test phase pressure), a passing test is indicated.

(b) PVC: installation is considered acceptable if the amount of water added during the 2-hour test phase to maintain pressure within +/-5 psi of the test pressure is less than L:

$$L = (SD(P^{0.5}))/148{,}000$$

Where: L = testing allowance (makeup water), in gal/hr
S = length of pipe tested, in feet
D = nominal diameter of the pipe, in inches
P = average test pressure during the hydrostatic test, in psi (gauge)

All exposed pipe, fittings, valves and joints shall be carefully examined for leaks. Any cracked or defective pipe, fittings, valves or other appurtenances discovered as a consequence of the pressure test shall be removed and replaced with acceptable material. All leaking or defective joints shall be repaired, corrected or replaced. After all necessary replacements and corrections have been made, the test shall be repeated to the satisfaction of the Engineer.

If the pipeline fails the test twice, the Contractor shall be required to retest the pipeline and provide the Department certification by a Professional Engineer registered in the State of Florida that the pipeline has passed the test in accordance with these standards.

T2.06 Casing Installation

Casing installation shall be performed by jacking and boring under highways and railroads where shown on the plans. The casing pipe size, thickness, length, location and detail shall be as indicated and specified hereinafter. The work shall be performed by a qualified contractor experienced and regularly engaged in this type of work. All necessary materials, equipment, labor and traffic protection devices shall be on the job site before starting the work.

The Contractor shall strictly adhere to Florida Department of Transportation Utility Accommodation Manual, Hillsborough County Utility Accommodation Guide, CSX Transportation, Inc./Seaboard System Railroad Standard Specifications for Pipelines, AASHTO Standards and requirements of any other agency, whether public or private, having jurisdiction over the highway/railroad property concerned. The Contractor is advised that the requirements of the jurisdictional authority may limit start and stop days of the week as well as times of the day. Requirements may be established either verbally from an on-site representative, may be in the form of a written notice or permit, or may be transmitted through the Department. No construction or mobilization shall be started until the necessary permits have been

obtained, a copy of the permit is at the job site, and proper notice and approval for construction have been obtained from the Department.

Casing pipe shall be welded steel pipe having minimum sizes and thickness as shown in the Standard Details contained within this document. The steel shall meet the requirements of ASTM A139, Grade A. The Contractor may use a welded steel casing pipe of a larger diameter if approved by the Department.

Only new pipe shall be used and all surfaces shall be smooth and uniform without bulges, dents, or warping. Finished lengths of pipe shall have beveled cut ends to facilitate proper, full depth welding of transverse joints. The casing may require bituminous coating if so dictated by the agency having jurisdiction over the jacking and boring site.

Prior to ordering equipment and materials for the jacking and boring operation, the Contractor shall get approval from the Department of his jacking equipment. Hydraulic jacks shall be used in the jacking operation and extreme care shall be taken to hold to exact line and grade. Excavation at the heading shall be advanced not more than one foot ahead of the casing pipe and may be done manually with an auger. Reaction blocks shall be utilized and adequately designed to carry the thrust of the jacks to the soil without excessive soil deflection and in such a manner as to avoid any disturbance of adjacent structures or utilities. Adequate protection railings shall be provided at the top of the pit at all times.

The jacking pit shall be of adequate length to provide room for the jacking frame, the jacking head, the reaction blocks, the jacking auger rig, and the jacking pipe. The pit shall be sufficiently wide to allow ample working space on each side of the jacking frame. The depth of the pit shall be such that the invert of the pipe when placed on the guide frame will be at the elevation desired for the completed line. The pit shall be tightly sheeted where necessary and kept dry at all times. The jacking frame shall be designed so that it applies a uniform pressure over the entire pipe wall area of the pipe to be jacked.

Extreme care shall be taken to insure that the casing is installed to accurate line and grade; maximum acceptable error in any direction from the design grade and alignment shall be 1/8-inch per foot or as directed by the Department.

Upon completion, the Contractor shall obtain and furnish to the Department, a written release from the governing agency indicating satisfactory completion of the crossing.

T2.07 <u>Fittings</u>

Fittings shall be handled with care to avoid damage. All fittings shall be loaded and unloaded by lifting, and under no circumstances shall fittings be dropped, skidded, or rolled. Fittings shall not, under any circumstances, be placed against pipe or other fittings in such a manner that damage could result. Slings, hooks, or tongs used for lifting shall be padded in such a manner as to prevent damage or exterior surface

or interior lining of fittings. If any part of the fittings' coating or lining is damaged by the Contractor, the repair or replacement shall be made by the Contractor in a manner satisfactory to the Engineer before installing. Fittings shall also be stored at all times in a safe manner to prevent damage and kept free of dirt, mud, or other foreign matter. All fitting gaskets shall be stored and placed in a cool location out of direct sunlight and out of contact with petroleum products. All gaskets shall be used on a first-in, first-out basis. Adequate precautions shall be taken to prevent the separation of joints at bends, tees, and plugged ends.

Details of design, construction, applications, installations, and number of joints necessary for the restraint of a given thrust shall be as specified herein, as shown on the Standard Details or as indicated on the plans. Under no circumstances shall gray iron pipe be used at restrained joints. Ductile iron pipe will be used unless otherwise specified by the Department.

Where reaction or thrust blocking is required, it shall be of concrete meeting the following design criteria:

- Compressive Strength - 3,000 PSI
  90% after 7 days
  110% after 28 days
- % Air Entrainment - 5.0%
- Water/Cement Ratio - 265 lb Water/1 CY Concrete
- Maximum Aggregate Size - 1½"
- Slump - 3" - 4"

Blocking shall be placed between undisturbed earth and the fitting to be anchored where firm support can be obtained. The area of bearing on the pipe and on the ground in each instance shall be that shown on the plans, the Standard Detail or as directed by the Engineer. The fittings shall be polyethylene encased in a manner acceptable to the Engineer prior to blocking. The blocking shall, unless otherwise shown or directed, be so placed that the pipe and fitting joints will be accessible for repair. If the soil does not provide firm support, then suitable tie rods, bridles, clamps and accessories as specified by the pipe manufacturer to brace the fitting properly shall be provided.

Pre-cast thrust blocks may be used in lieu of poured-in-place blocks on 8 inch and smaller ductile iron water mains only. This type of block must be manufactured in accordance with these Technical Specifications. Size and bearing area of blocks will be as shown in the standard details or as determined by the Department. The Department has the authority to reject any damaged block or any block considered to be of questionable quality. Placement will be in accordance with standard procedures for restraining thrust. Earth behind such blocks will be either undisturbed or compacted to a minimum of 95% (Modified Proctor) density.

Tie rods and pipe clamps when allowed by the Department must be of adequate strength to prevent movement or other suitable means may be used as allowed by the Department. Steel rods, clamps, and washers shall be rustproof treated with bituminous material and polyethylene encased.

T2.08 Valves

Valves shall be handled with care to avoid damage. All valves shall be loaded and unloaded by lifting, and under no circumstances shall valves be dropped, skidded, or rolled. Valves shall not be placed, under any circumstances, against pipe, other valves or other fittings in such a manner that damage could result. Slings, hooks, or tongs used for lifting shall be padded in such a manner as to prevent damage. If any part of the valves' coating and lining is damaged by the Contractor, the repair and replacement shall be made by the Contractor at his expense in manner satisfactory to the Engineer before installing. Valves shall also be stored at all times in a safe manner to prevent damage and kept free of dirt, mud, or other foreign matter. All valve gaskets shall be stored and placed in a cool location out of direct sunlight and out of contact with petroleum products. All gaskets shall be used on a first-in, first-out basis.

Valves shall be set and joined to new pipe in a manner heretofore specified for cleaning, laying, and joining pipe. Valves shall be installed such that the operating nut is plumb, and its top is less than 48-inches from finish grade at the valve. Valve stem extensions shall be installed on any operating nuts deeper than 48-inches (see Detail 3.05).

Cast iron valve boxes shall be firmly supported and maintained centered and plumb over the operating nut of the valve by the Contractor with box cover flush with the surface of the finished pavement or at such other levels as may be directed. Valve boxes shall have 6-inch thick wire mesh reinforced concrete pads poured around the top section of the valve box when in pavement or when directed by the Department. The pad shall be 24 inches square and shall be centered on the valve box. All Department valve covers shall be painted safety blue as prescribed by the American Public Works Association (APWA) uniform color code for utility systems.

The valve and valve box shall be installed so Department personnel can insert a valve key through the valve box and completely open and close the valve. This test will be accomplished before final acceptance of the valve and box into the water system.

T2.09 Taps

All material supplied shall be disinfected in accordance with Department standards.

After the tapping sleeve and valve have been installed and before the tap is made, the sleeve shall be tested to ensure a watertight joint. A test plug shall be provided in the sleeve and after the sleeve has been installed, it will be filled with water and the pressure increased to between 150 psi and 190 psi. All leaking joints shall be repaired to the satisfaction of the Engineer at the Contractor's expense.

All tapping sleeves shall be wrapped and sealed with polyethylene encasement material in a manner

acceptable to the Engineer.

T2.10 Hydrants

Fire hydrants shall be handled so as to avoid any damage at all times. Hydrants shall be located in a manner to provide complete accessibility and in such a manner that the possibility of damage from vehicles or injury to pedestrians will be minimized. Fire hydrants in FDOT rights- of-way shall conform to FDOT clear zone requirements. Unless otherwise directed, the setting of any hydrant shall be as described in these Technical Specifications. All fire hydrants shall be thoroughly cleaned of dirt or foreign material before installation. All hydrants shall stand plumb and shall have their pumper nozzle perpendicular to the curb. The top of flange elevation shall be finished grade plus 4 inches. Standard depth of bury shall be 3 to 5 feet. Each hydrant shall be connected to the water main with a 6-inch branch controlled by an independent 6-inch resilient seat gate valve hydrant shut-off valve. Per the Florida Fire Prevention Code, NFPA 1:18.3.4.1, clearances of seven and one-half feet in front of and to the sides of the fire hydrant are required, with four feet clearance required to the rear of the hydrant.

All fire hydrant leads shall be made of ductile iron pipe. All fire hydrant tees shall be made of ductile iron.

All hydrants shall be anchored by restrained fittings as specified in these Technical Specifications and as shown in the Standard Details.

All fire hydrants shall be painted with a high-grade enamel, Federal Safety Yellow (OSHA approved), above the ground line.

All hydrant sets shall include the installation of a concrete thrust collar around the barrel of the hydrant 8 inches below the ground line.

Upon completion of installation and passing all required tests, the Contractor shall paint the bonnet of the hydrant OSHA green.

T2.11 Meter and Fire Service Connections

Any water meter and fire service connection made to new water distribution mains shall be at locations called for in the plans, in meter set cards, or as otherwise directed by the Department. No meter or fire service connections are to be installed outside right-of- way limits unless easements have been provided or as directed by the Engineer. Any trenching, excavation, backfilling, cutting, tapping necessary to install meter and fire service connections and such incidental work associated with the installation of meter and fire service system shall be performed in strict accordance with these specifications or as directed by the Engineer. Meters and double detector check valves shall be handled so as to avoid any damage at all times.

T3.00 TESTING

The Department will require the Contractor to perform the required tests to ensure that all pipe installed including service lines meets the Department's standards. The required tests are as follows:

T3.01 Hydrostatic Testing

1. Pressure Testing

All newly laid pipe, including fittings, valves and service lines shall be pressure tested in accordance with AWWA Standard C600 and these documents where applicable.

The Contractor shall provide all necessary equipment and instrumentation (pressure gauges, volume gauges, hoses pumps, test pipe, test fittings, etc.) required for flushing and testing of the piping systems. Pressure gauges shall be marked in graduated increments that do not exceed 2 pounds per square inch. Gauges used to measure the volume of water necessary to raise post-test line pressure back to the highest pressure achieved during the test duration will be marked in graduated increments which do not exceed 5 ounces. If requested by the Engineer, the Contractor shall furnish to the Engineer certified test data for the pressure gauges and recorders used on hydrostatic equipment. Water for test purposes will be supplied by the Department. At the option of the Engineer, flow meters and/or pressure gauges used on hydrostatic testing equipped with approved strip or round chart recorders shall be supplied by the Contractor. Tests shall be made in sections not to exceed 1/2 mile. Testing shall be conducted in the presence of and to the satisfaction of the Engineer as a condition precedent to the approval and acceptance of the system. Not less than 3 days of notice shall be given prior to start of such tests, and such testing shall not be scheduled until preliminary testing by the Contractor has indicated that the test section is ready for testing. The schedule and procedures for testing shall be determined by the Contractor and reviewed with the Engineer prior to testing.

The duration of each pressure test shall be at least 2 hours with a minimum test pressure in excess of 150 psi. At no time shall the test or line pressure exceed 190 psi. If required by the Engineer, pump test equipment will be equipped with pressure relief valves pre-set to 190 psi. Each valved section of pipe shall be slowly filled with water and a pump shall be connected to the low point of the section being tested.

Before conducting the test, the Contractor shall backfill all pipe and reaction blocking unless the Engineer directs certain joints or connections to be left uncovered. When reaction blocking is provided, the pressure test shall not be made until adequate curing time for the blocking has been allowed.

Before application of the test pressure, all air shall be expelled from the pipe. To accomplish this, taps will be made, if necessary, at points of highest elevation and afterward tightly stopped with tapered brass plugs,

all at the Contractor's expense.

At the end of the 2-hour test period, the Contractor will be required to pump the lines back up to the highest pressure obtained during the duration of the test period.

Pressure tests shall be made between valves to demonstrate the ability of the valve to sustain pressure. All piping systems shall be tested in accordance with these test methods in addition to any other tests required by local plumbing codes or building authorities.

Throughout the duration of the test, the Contractor is required to maintain a minimum pressure in excess of 150 psi. The Contractor is advised that, should the test pressure fall to or below 150 psi any time during the 2-hour test, the test will be considered invalid and a retest will be required. Therefore, it is advised that the Contractor should pump water into the line as the test pressure approaches 150-psi.

The Contractor is warned that pressure testing against existing valves is done at his own risk. Failure of these valves to hold test pressure will not relieve the Contractor of the pressure testing.

All exposed pipe, fittings, valves and joints shall be carefully examined for leaks. Any cracked or defective pipe, fittings, valves or other appurtenances discovered as a consequence of the pressure test shall be removed and replaced with acceptable material. All leaking or defective joints shall be repaired, corrected or replaced. After all necessary replacements and corrections have been made, the test shall be repeated to the satisfaction of the Engineer.

If the pipeline fails the pressure test twice, then the Contractor shall be required to retest the pipeline and provide to the Department certification by a Professional Engineer registered in the State of Florida, that the pipeline has passed the test in accordance with these standards prior to the Water Department scheduling and witnessing the pressure test.

2. Leakage Tests for Pipelines

Concurrently with pressure testing, pipelines shall be subjected to leakage tests.

Leakage measurements shall not be started until a constant test pressure has been established in excess of 150 psi.

The duration of each leakage test shall be at least 2 hours and the test pressure shall be as specified for the pressure tests. Leakage is defined as the quantity of water that must be supplied into the pipeline or section thereof to maintain the established test pressure after the air in the pipeline has been expelled and the pipe filled with water plus that volume of water required at the conclusion of the test to bring the line pressure back up to the highest pressure obtained during the duration of the test period.

The maximum allowable leakage shall not exceed the number of gallons per hour (gph) as determined by the following formula:

$$L = (SD \times \sqrt{P}) / 148{,}000$$

where,
L - allowable leakage, gph
S - length of pipeline tested, feet
D - nominal diameter of the pipe, inches
P - average test pressure during the leakage test, psi gage

When leakage exceeds the allowable limit, the defective pipe or joints shall be located and repaired. All visible leaks are to be repaired regardless of the amount of leakage. If the defective portions cannot be located, the Contractor shall remove and reconstruct as much of the work as is necessary until the leakage is within the allowable limits. Such corrective work or damages to other parts of the work as a result of such work shall be at the Contractor's expense.

Leakage detection at mechanical joints shall be stopped by tightening the gland (not to exceed required torque) and leaking slip joints shall be cut out and entirely replaced or if permission is given by the Engineer, it may be repaired by a suitable clamp. Any split, cracked or defective pipe, fittings, valves, or hydrants discovered as a result of this test shall be removed and replaced by the Contractor with sound material and then test shall be repeated.

If the pipeline fails the test twice, the Contractor shall be required to retest the pipeline and provide the Department certification by a Professional Engineer registered in the State of Florida that the pipeline has passed the test in accordance with these standards.

T3.02 Disinfection

The Contractor shall disinfect the water mains in accordance with the applicable section of the latest AWWA Specification C651, as summarized below. The Contractor, if directed, shall use the method specified by the Engineer.

Method of Chlorination

1. Slug Method

The slug method consists of: a) Completely filling the main in order to remove air pockets, b) flushing the main with a velocity of not less than 2.5 feet per second (fps) in order to remove particles, c) at a point not

more than 10 feet downstream of the water source flushing the new main; chlorine is to be continuously injected for a sufficient period to develop a solid column or "slug" of chlorinated water, d) the slug of chlorinated water is to move through the main exposing all interior surfaces to a chlorine concentration of approximately 100 mg/L for at least a 3 hour period.

2. Continuous Feed Method

The continuous feed method consists of a) completely filling the main to remove air pockets, b) flushing the main with a velocity not less than 2.5 fps, c) at a point not more than 10 feet downstream of the water source flushing the new main; chlorine is to be injected in the new main at a constant rate sufficient to establish a 25 mg/L chlorine concentration throughout the main, d) Note table for amount of sufficient chlorine required for each 100 foot section of pipe of various diameters.

Pipe Diameter	100% Chlorine (1b)	1% Chlorine Solution (gal)
4	0.013	0.16
6	0.030	0.36
8	0.054	0.65

The chlorinated water shall be retained in the main for at least 24 hours and have a residual of not less than 10 mg/L free chlorine prior to flushing.

3. Testing

Upon completion of the hydrostatic test and disinfection, the Contractor shall contact the Department's Construction Section requesting a bacteria test. The Contractor shall install sample taps on the new main and at the end of each new branch of the piping system. The Contractor shall flush the chlorinated disinfection water from the piping system until a free chlorine residual of 1 to 1.5 mg/L is maintained. The Engineer will pull a water sample on 2 consecutive days allowing 24 hours for each sample to be processed.

The contractor shall coordinate the scheduling of the sampling procedure a minimum of one-week in advance of wanting the sample to be pulled. Due to the varying workload, the sample will be scheduled and pulled as the schedule permits. All failed samples, or samples that are not ready at the time of collection, will be charged to the contractor at the current rate it costs the Department per sample.

Due to the requirements from the FDEP, the contractor may be required to remobilize to the job site thirty to forty-five days after the samples have been cleared to perform necessary meter transfers and/or cut and plugs.

Samples for bacterial analysis will be taken and analyzed by the Department. The sampling process may only begin on Mondays or Wednesdays. Two consecutive approved samples, taken 24 hours apart, will be required. Those samples will be pulled by the Water Department 24 hours apart. If the first sample is taken on Monday, the second sample must be taken on Tuesday. If the first sample is taken on Wednesday, the second sample will be taken on Thursday. No samples will be taken on Friday and the sampling process will not begin on Tuesday or Thursday. All drilling and tapping equipment shall be sterilized as directed by the Engineer.

After completing the testing and sterilizing and regardless of ground conditions, all sample taps and corporation stops shall be removed from the pipe and replaced with tapered brass plugs.

T4.00 RESTORATION

T4.01 Waste Material Disposal

The Contractor shall remove and dispose of all debris and excess spoil resulting from clearing, demolition and excavation operations. Natural waterways or bodies water shall not be used for disposal or debris.

All debris shall be disposed of at a site approved and permitted by the State for such disposal. Clean spoil may be disposed on private property only with written authorization of the property owner.

Burning of brush or debris may be permitted, if allowed by the City, subject to the Contractor's securing permits and providing such fire watch and notification of local fire companies as may be required by local law or ordinance. Such permits, however, shall not relieve the Contractor of his responsibilities or liabilities with regard to protecting public health or properties.

T4.02 Repair and Resurfacing

Where street paving, driveways, sidewalks or curb and gutter is disturbed, restoration shall be made to a condition at least equal to the original. All materials used for restoration shall conform to standard requirements of that particular agency responsible for roadway maintenance where construction takes place. All restoration work shall also meet the requirements of both the permitting agency as well as the City. The Contractor shall determine, to his own satisfaction, any requirements and procedures, other than those set forth herein, which may affect the type, quality and method of carrying out the restoration to the satisfaction of the Department of areas to be restored.

Base material shall be of the type removed or of equal or greater structural strength as determined by the Engineer. Existing base material from the excavation shall not be reused as base material, but may be used as a stabilizer, or for trench backfill after removal of existing asphalt, unless it is determined by the

Engineer to be unsuitable.

Edges of pavement shall be mechanically sawed to provide a neat, straight edge to the width shown on the plans, or greater if necessary, prior to replacement. Base material shall be placed to the depths required by permitting agency and thoroughly compacted to the density required by the Department or to the standard of the governing permitting agency.

The Contractor shall pay careful attention to the proper reconstruction of the pavement adjacent to the gutters and at street intersections to obtain satisfactory drainage to inlets from the intersecting streets.

Pavement replacement shall be with the same materials as removed and installation methods and procedures shall comply with the appropriate procedures established by the FDOT Standards Specifications or the appropriate permitting agency.

In the absence of governing agency requirements, where asphaltic concrete overlays are performed, the overlays shall be 1 inch thick over the pipe trench area as directed by the Department so as to provide a smooth transition between the existing pavement and the overlay pavement. In the event that the contractor maintains his disturbed area within the maximum pay limits but the jurisdictional authority requires milling and overlaying in excess of the maximum pay limits, the contractor will be paid for the additional milling and overlaying at the appropriate contract unit prices.

Permanent pavement replacement shall not commence until acceptable to the Engineer. Until such replacement is completed, the Contractor shall maintain all trenches and disturbed areas, providing additional base materials as is necessary to maintain smooth transition of the areas by vehicular traffic and providing dust control as necessary.

T4.03 <u>Pavement Marking</u>

Where shown or required for repaired/replaced pavement, pavement marking shall be painted with thermoplastic markings.

Thermoplastic compound sealing primer and glass spheres shall meet the requirements of FDOT Standard Specifications, Sections 711 and 971, or the requirements of the governing permitting agency.

Pavement marking of repairs/replacements shall match the previously existing pavement where applicable. Where markings are required other than replacement of previously existing markings, the Contractor shall follow the requirements of the U.S. Department of Transportation, Manual of Uniform Traffic Control devices for streets and Highways. Application of thermoplastic markings shall comply with FDOT Standard Specifications, Section 711, or the requirements of the governing permitting agency. Reflective pavement markers (RPMs) shall be installed to match the pattern in place prior to the start of construction.

T4.04 Street Signs, Traffic Signs and Informational Signs

Removal and relocation of all street or traffic signs shall be approved through the appropriate permitting agency.

The Contractor will furnish and install project informational signs as indicated in the contract documents and as directed by the Engineer. The Contractor will remove the sign at the conclusion of the project. Compensation will be in conformance with the appropriate pay item(s).

T4.05 Seeding

All areas designated to be seeded by the Engineer shall be according to installation procedures and materials outlined herein.

Materials for top soils and seeding, including fertilization, shall comply with the applicable requirements of FDOT Standard Specifications, Sections 570 and 981, or the governing permitting agency.

Areas designed to be seeded shall first be fine graded to match the surrounding areas and shall be sown only where the soil is moist and in proper conditions to induce growth. Seeding operations shall not be undertaken when wind velocities exceed 15 mph or the soil is unduly wet or otherwise not in a tillable condition. Grass seed shall be in accordance with FDOT Standard Specifications, Section 570 or shall be of a quality acceptable to the Department. The Contractor shall properly water and otherwise maintain all seeded and mulched areas until final acceptance by the Engineer. Any areas that fail to show a "catch" or uniform stand shall be reseeded and such reseeding shall be repeated, at no additional cost to the Department, until final acceptance. Procedures for top soils and seeding, including fertilization, shall comply with the applicable requirements of FDOT Standard Specifications, Section 570, or the governing permitting agency.

T4.06 Sodding

All areas designated by the Engineer to be sodded shall be sodded according to installation procedures and materials outlined herein.

Sod shall be of the same type as the surrounding grassed areas (unless specified otherwise by the Department), be free of weeds, and have well matted roots. The sod shall be live, fresh, and uninjured at the time of placing. Materials for sodding shall meet the applicable requirements of Sections 575 and 981 of the FDOT Standard Specifications, or the requirements of the governing permitting agency. Except as required to match surrounding grassed areas, sod may be St. Augustine, Bahia, or other varieties as selected by the Department.

Areas designated to be sodded shall first be fine graded to match surrounding areas and scarified or loosen to a suitable depth. Sod shall be placed as soon as possible after being dug and shall be shaded and kept moist from the time it is dug until it is planted. Methods for sodding shall meet the applicable requirements of Section 575 of the FDOT Standard Specifications, or the governing permitting agency.

T4.07 PAVEMENT/RIGHT OF WAY RESTORATION REQUIREMENTS – Rev. 2009

SEE PAVEMENT STANDARD DETAILS
Pavement Options:

PAVEMENT *(Classification)	BASE MATERIAL (Section 1-2)	CONCRETE (Section 1-3)	ASPHALT SURFACE (Section 1-4)	FULL DEPTH ASPHALT (Section 1-5)
A	6”	4”	1”	5”
I	8”	6”	2”	7”
II	12”	8”	3”	10”

***Classification:**
Class A: Alleyways, Residential and Low Volume Commercial Driveways
Class I: 2-Lane Residential Streets and High Volume Commercial Driveways
Class II: Multi-Lane or High Volume 2-Lane Streets (most depicted by centerline markings)

Notes:
1) If existing roadway is stabilized, increase base material thickness by 50 %
2) If original pavement exceeds max. 3” ,match the existing asphalt thickness
3) Minimum 4” of shell marl, crush concrete, or asphalt millings placed in unimproved (dirt) trafficked right-of –way
4) Concrete shock pad required for any utility repaired/ installed less than 30” (needs C.O.T. Engineer approval)
5) Brick pavement shall be restored as specified in Section 1-6 Brick Replacement
6)

SECTION 1

PAVEMENT RESTORATION SPECIFICATIONS

1.0 BACKFILL and SUBGRADE: Replace and compact clean sub-grade material classified as A-1, A-2, A-3. Backfill shall be free of objectionable material (bricks, broken pavement, concrete, clay, muck, etc.). If flowable fill is used both mix and installation shall conform to FDOT Standard Specifications for Road and Bridge Construction (January 2000), Section 121-1 through 121-6.

1) Density Requirements: Material shall be compacted in lifts not to exceed 12”. Densities are required at alternative 1’ lifts of vertical fill above excavation bottom of trench and for each prepared trench segment, not to exceed 200’. Density test is not to be taken through succeeding layers. The final subgrade density test shall be taken at elevation beneath Base Material or Full depth.

1.2 Density Specification: Shall meet 98% compaction of AASHTO T-180.

1) BASE MATERIAL: Approved by a City of Tampa D.P.W. Engineer and/or meeting the FDOT Standard Specifications for Road and Bridge Construction (January 2000). Submittal may be requested by C.O.T.

2) Acceptable Materials: Limerock, Shell Marl, Crushed Concrete, Concrete (3000 min. PSI), and Asphalt Plant Mix.

3) Density Requirements: Place and compact in two lifts. Asphalt Plant Mix shall be compacted in accordance to Section 1-4.Densities are required for each trench segment at final grade, not to exceed 200’.

1.3 Density Specifications: Shall meet 98% compaction of AASHTO T-180.

1) CONCRETE: 3000 PSI minimum 28 days strength. Placed on compacted, moistened subgrade. Consolidate and cure. Do not load for 72 hours.

a. Concrete Specifications: Density test of subgrade may be required at the Inspector’s discretion.

1-4 ASPHALT SURFACE: Sawcut all sides a minimum of 6” from replaced base. Paint with RC 70 (or equal) tack. Place and compact in lifts S-1 or S-3 type asphalt plant mix. The finished pavement is subject to inspection and approval by City of Tampa D.P.W. Engineer.

1) Density Requirements: Type S-1 lift to be 1 ¼” min. and 3” max. (if lift exceeds 2”, compact with a drum roller type compactor). Type S-3 lift to be ¾” min. and 1 ½” max.

2) Density Specifications: Quality assurance testing of the asphalt may be required at the Inspector’s discretion. (generally: 96 percent compaction of asphalt plant mix design bulk specific gravity)

1.5 FULL DEPTH ASPHALT: Same as requirements for Section 1-4 ASPHALT SURFACE

1) BRICK REPLACEMENT: Brick shall be re-laid according to Section 2 PROCEDURES. Place and grade 1 ½” of sand over base or concrete. Place brick uniformly, staggered with respect to the adjacent course. Any work area disturbing a street listed as a “Historical Street” shall be required to replace original brick. The contractor is responsible for safe storage of materials until such time the brick is re-laid.

2) Base Options:

A. Limerock, Shell Marl: shall meet Section 1-2 BASE MATERIALS, requires brick joints to be sealed with Asphaltic Steep #7330 or Surebond 1300 Sealer.

B. Crush Concrete: Shall meet Section 1-2 BASE MATERIALS, requires brick joints to be sealed with 1:4 sand cement mixture (slurry or moistened to ensure that cement sets).

C. Concrete: shall meet Section 1-3 CONCRETE, 4" of concrete is used as base material, requires brick joints to be sealed with 1:4 sand cement mixture (slurry or moistened to ensure that cement sets).

3) Density Requirements: Subgrade material shall meet Section 1-1 BACKFILL and SUBGRADE. Base material shall meet Section 1-2 BASE MATERIAL.

4) Density Specifications: Shall meet 98% compaction of AASHTO T-180.

SECTION 2

PAVEMENT RESTORATION PROCEDURES

GENERAL:

The Permit holder is to contact D.P.W. Technical Services at (813) 635-1949 or Fax. 622-1956, 48 hours prior to starting permitted work. **The material testing results should be forwarded to the department/inspection group performing the inspection**

Testing/Inspection shall be scheduled with D.P.W. Materials Testing and Inspections on any part of the replacement work. Tests will be performed by the City's Testing/Inspections Lab or an approved private engineering testing laboratory. **Contact: (813) 635-3408**.

The Foreman on each project shall maintain on-site, copies of the approved Department of Public Works "Application and Permit for Construction and Maintenance Operations within Public Rights of Way, including plans, drawings, and the Pavement Restoration Requirements – 2003.

Copies of all applicable material delivery tickets and copies of all test results not taken by D.P.W. Materials Testing and Inspections, shall be forwarded to D.P.W. Technical Services at 3806 26 Ave East, Tampa, Fla. 33605. Fax number (813)-622-1956.

EXCAVATION:

Utility installations shall be placed a minimum of 30" below grade. If, because of utility conflicts or unusual conditions, the 30" minimum depth requirement cannot be maintained, special authorization may be granted for installation at a lesser depth. Installations shall maintain the 30" depth, unless special authorization is granted in writing, by the D.P.W. Engineer.

All trench widths under pavement, including driveways, are to be a minimum of 18”, to allow mechanical compaction of backfill and base. Density tests are required and restoration shall meet SECTION 1.

Where pavement and/or base are undermined, disturbed, or otherwise damaged, such areas shall be cut away and the pavement replacement work extended to correct such conditions.

Tunneling under driveways, sidewalks, curbing, retaining walls, and pavement shall not be allowed unless approved prior to work is given by C.O.T. Engineer.

When obstructions are encountered in driving or jacking, pipe shall be cut off, left in place, and filled with a flowable fill type grout to prevent the formation of voids.

Edges of jacking pits, directional bore pits, exit pits, trenches, etc. shall be a minimum distance, equal to the depth of the pit excavation, from any pavement, curbs, sidewalks, or other structures. If this distance cannot be maintained, backfill shall be compacted in lifts not to exceed 12” and density tests taken as outlined in SECTION 1-1.

Ditches shall be restored promptly to prevent the formation of sediment in the existing drainage system. Erosion control shall be enforced. The existing ditch grade and cross section profile shall be maintained. The City will require sodding, sprigging, or seeding and mulching to restore stable cover of vegetation on ditch banks, shoulders, and other areas disturbed by construction. Vegetation restoration will be kept moist and maintained until well established. Staking of sod will be required if ditch slope exceeds 4:1.

Erosion control shall abide by Erosion Control Methods set forth in C.O.T: D.P.W. Standard Drawings where applicable

Lawn and landscaped areas shall be restored to original or better condition. Each situation may require individual attention and differing restoration procedures.

CONCRETE

Concrete sidewalks, driveways or pavement affected by construction operations will be corrected by removing and replacing full panels. Cuts in concrete sidewalks or driveways shall be sawed in straight lines at panel joints and replaced to full panels.

Concrete replacement shall be a minimum thickness of 6” for driveways and 4” for sidewalks. Concrete and density requirements shall meet SECTION 1-3.

Concrete curb and gutter will be formed and placed as a single unit to conform to City of Tampa Standards.

Expansion joints shall be provided at not more than 50’ intervals on curb and sidewalk replacement work.

Expansion material shall be used where new concrete meets existing. Sidewalks shall have tooled construction joints or sawed control joints at 5’ intervals for 5’ wide sidewalk and 6’intervals for 6’wide sidewalk

BRICK:

Brick pavement shall be re-laid as called for by the street replacement schedule and on a complete and accepted base with a sand cushion and only clean whole, sound brick shall be used.

Brick replacement consists of bringing the area to be repaved to a subgrade and base conforming to the required grade and cross section of uniform density ready to receive the brick. Material and density requirements shall meet SECTION 1 1-6.

Any part of the subgrade and base area inaccessible to the mechanical compactor shall be compacted by hand or power tamping in a manner acceptable to the engineer.

The brick shall be laid in straight courses, flat on the prepared sand cushion, with the better side of face upward.

The brick shall be laid in close contact and the joints of each course shall be uniformly staggered with respect to adjacent courses. Whole brick shall be used except in starting or finishing a course and in fitting around manhole tops or structures. In general, not less than ¼ of brick shall be used in batting.

The joints shall be filled in accordance with SECTION 1 1-6.1. The 1:4 sand/cement mixture shall be “soupy” and swept in with street brooms or may be dry mixed, swept in with street brooms, consolidated by vibratory methods, and sufficiently moistened to ensure that cement sets. Excess grout shall be removed from surface.

Joint filler shall take place immediately to prevent joints from filling with foreign matter.

ASPHALT:

Asphalt pavement edges of cuts are to be sawed in straight lines parallel and perpendicular to pavement edges. One uniform parallel line for paving shall exist along edge outside trenchline. When the existing asphalt is less than 3” thick, pavement shall be cut and removed for a minimum distance of 6” from edge of the trench.

Tack coat shall be applied to the surface of the pavement base and adjoining asphalt butted edge joint**.** ***No*** “feathering” of asphalt at the joint will be allowed. These areas are to be free of all loose material and foreign matter before applying tack coat.

Asphalt pavement installation shall be rolled in place in a controlled pattern with a mechanical compactor capable of sufficiently applying enough loads to meet density requirements in accordance with SECTION 1-4.2 .

If an asphalt overlay is called for, a string line must be used while spreading the material, to obtain neat patches with straight edges. Where a cut is adjacent to or within 3' of a previous patch, the pavement replacement and/or resurfacing shall be extended to include the previous patch.

Final surface restoration must be completed to the City's standards and the City reserves the right to require the entire roadway surface width to be overlaid to lengths determined by the City.

Upon completion of the roadway surface, the contractor shall replace all damaged pavement markings per City standards.

TEMPORARY RESTORATION

Temporary pavement surfaces and sub surface materials shall be restored conforming to all requirements regarding configuration, thickness, and density as detailed in SECTION 1. The pavement shall be temporary finished with a suitable grade of asphalt and sand to provide a temporary-wearing course and to eliminate a dust nuisance. Temporary pavement shall be restored with the proper **permanent** surface within specified time period stated in the legal Permit for Construction and Maintenance Operations within Public Rights of Way.

T4.08 VITRIFIED BRICK REPLACEMENT (REVISED 4/27/2009)

Subgrade:

This work consists of bringing the area to be repaved to a subgrade conforming to the required grade and cross section surface of uniform density ready to receive the base course. This is to be accomplished by excavating or backfilling as needed, shaping, and then rolling the entire area with an approved self-propelled tandem roller weighing not less than 8 tons. Shaping and rolling to continue until subgrade has been properly prepared and shows that no further compaction of any practical benefit would result from continued rolling. It shall be tested as to cross section, crown and elevation. After being properly prepared, it shall be so maintained until the base course is constructed. A completed subgrade shall be maintained sufficiently in advance of the base course operations to permit of proper control. Any part of the subgrade area inaccessible to the roller shall be thoroughly compacted by hand or power tamping in a manner acceptable to the engineer. Subgrade shall be minimum 12" and be compacted to 98% per AASHTO T-180.

Base:

This work consists of placing 10" of crushed concrete base material atop the prepared and accepted subgrade. The base will be placed in at least two lifts. The 10" crushed concrete will have a minimum LBR of 100 and will be compacted to 98% per AASHTO T1-80.

Where a base is encountered under the brick pavement, it shall be restored to the same thickness with the approved crushed concrete material before relaying the brick pavement.

Sand Cushion:

A sand cushion shall be constructed on all completed bases for vitrified brick pavement. The sand cushion hall be sharp sand composed of clean sand, free from clay, loam and other foreign matter, and shall be constructed to a uniform thickness of 1-inch upon the completed crushed concrete base. The sand cushion shall be prepared at least 25 feet in advance of laying the brick where possible. Care shall be exercised that the sand cushion is not disturbed or compacted until the bricks are in place and are ready for rolling.

Vitrified Brick Pavement:

Vitrified brick pavement shall be re-laid at locations called for by replacement schedule for street paving disturbed by construction operations, as shown on the plans. Vitrified brick pavement shall be re-laid on a completed base with a sand cushion and only clean whole, sound bricks shall be used. Acceptable brick removed from the disturbed areas removed by the contractor and/or removed from the City of Tampa stock pile, will be used for this repaving and shall not be hauled or moved by the contractor for use elsewhere unless directed by the engineer.

The brick shall be laid on straight courses, flat on the prepared sand cushion, with the better side of the face upward. The brick shall be laid in close contact and the joints of each course shall be uniformly staggered with respect to adjacent courses. Whole brick shall be used except in starting or finishing a course and in fitting brick pavement around manhole tops or other structures. In general, not less than one-fourth of brick shall be used in batting.

A timber straight edge shall be driven against each fourth course o brick by light blows with a sledge or maul to straighten the lines and eliminate appreciable space between the bricks.

The surfaces shall be swept clean and rolled with a tandem static roller weighing not less than 5 and no more than 8 tons in a manner to firmly embed each brick in the sand cushion so that the completed pavement shall conform to the required crown, grade, and cross section.

The joints of the vitrified brick pavement replacement shall then be filled with a 1:4 sand/cement mixture and/or pure sand. If pure sand, the pure sand must be sealed with Surebond SB-1300 Sealer or approved equal. The 1:4 sand/cement mixture of mortar grout shall be "soupy" and swept in with street brooms **or may be dry mixed, swept in with street brooms, consolidated by vibratory methods, and sufficiently moistened to ensure that cement sets.** If "soupy" application is used, then Contractor will blot the joints with sand after sweeping application to remove excess grout.

The application joint filler should take place immediately after laying the brick or as soon as possible thereafter to prevent joint from filling with other foreign matter.

TECHNICAL SPECIFICATIONS - STORMWATER

SECTION 425 - STORMWATER INLETS, MANHOLES AND JUNCTION BOXES

W-425.01 General

The work specified in this section consists of the construction of inlets, manholes, junction boxes, shoulder gutter inlets, and yard drains. These structures shall be of reinforced concrete, or may be of brick masonry if circular and constructed in place, and shall include the necessary metal frames and gratings. The work under this section shall also include the adjustment of those structures shown in the plans to be adjusted or which are required to be adjusted for the satisfactory completion of the work. The new structures shall be constructed in conformity with the plans and in accordance with these specifications and the latest City of Tampa Stormwater Standard Details.

W-425.02 Composition and Proportioning

Concrete: Unless otherwise shown in the plans, all concrete for these structures shall be Class II as specified in the latest FDOT Standard Specifications Section 346 – Portland Cement Concrete and Section 347 – Portland Cement Concrete – NS.

Mortar: The mortar for brick masonry shall be of portland cement and sand, mixed in the proportions of one part cement to two parts of sand. Miami Oolitic rock screenings may be substituted for the sand upon prior approval of the Engineer. All the materials shall pass the No. 8 Sieve, and be uniformly graded from coarse to fine. At the option of the Contractor, hydrated lime, in an amount not to exceed ten percent of the amount of cement used, may be added to the mortar.

As an alternate to the above, masonry cement may be used in lieu of the above-specified mortar provided that it is delivered in packages properly identified by brand name of manufacturer, net weight of package, and whether it is Type 1 or Type 2, and further provided that it has not been in storage for a period greater than six months. Hydrated lime shall not be used with masonry cement.

The sand and cement shall be thoroughly mixed dry in proper boxes or mortar mixers and such quantity of clean fresh water added as will provide a stiff mortar of the proper consistency. The whole mass shall be thoroughly mixed until used. Any mortar that has set shall not be retempered in any way, and no mortar shall be used more than one and one-half (1-1/2) hours after mixing.

W-425.03 Gratings

Gratings and frames fabricated from structural steel shall be Zinc (hot-dip galvanized) Coatings on Iron and Steel Products, in accordance with the requirements of ASTM A123 These requirements do not apply when A-588 steel is used.

When Alternate "G" grates are specified, the chain, bolt, nuts, and cold shuts shall be galvanized after fabrication in accordance with the requirements of ASTM A 153.

W-425.04 Forms

Forms shall be of wood or metal, so designed and constructed that they may be removed without injury to the concrete. They shall be built true to line and grade and braced in a substantial and unyielding manner, and shall be approved by the Engineer before being filled with concrete.

W-425.05 Precast Inlets, Manholes, and Junction Boxes

Careful attention shall be given to the proper construction or reconstruction of the pavement adjacent to the gutters and at street intersections to obtain satisfactory drainage to the inlets from the intersecting streets.

The Contractor may request to substitute precast inlets, manholes, and junction boxes in lieu of cast-in-place units unless otherwise shown in the plans or directed by the Engineer. At locations not so restricted, the Contractor shall carefully examine the plan details at each structure to determine if use of a precast unit is feasible. The design and fabrication of precast units shall be in accordance with the standard index drawings, which may allow use of designs other than those detailed in the standard index drawings.

Smooth welded wire fabric may be substituted for deformed re-bar or welded deformed wire reinforcement in non-circular precast drainage structures provided the following requirements are met:

1. The smooth welded wire fabric shall comply with ASTM A-185.

2. Substitution of equal areas of smooth wire fabric for the reinforcing steel and provided the width and length of the unit is four times the width of the spacing of the cross wires.

3. Wire shall be continuous around the box and spliced at a quarter point of one side with an overlap of not less than the spacing of the cross wires plus two inches.

W-425.06 Construction Methods

Excavation: Excavation shall comply with the requirements specified in Section 1.

Placing and Curing Concrete: The concrete shall be placed in the forms, to the depth shown in the plans and thoroughly vibrated. After the concrete has hardened sufficiently, it shall be covered with suitable material approved by the Engineer, and kept moist for a period of three days.

Setting Manhole Castings: After the concrete has been cured as specified above, the frame of the casting shall be set in a full mortar bed composed of one part portland cement to two parts of fine aggregate.

Reinforcing Steel: The construction methods for the steel reinforcement shall be as specified in Section 6.

Laying Brick: All brick shall be saturated with water before being laid. The brick shall be laid by the shovejoint method so as to bond them thoroughly into the mortar. Headers and stretchers shall be so arranged as to bond the mass thoroughly. Joints shall be finished properly as the work progresses and shall be not less than 1/4 inch or more than 3/4 inch in thickness. No spalls or bats shall be used except for shaping around irregular openings or when unavoidable at corners.

The inside of the brick masonry walls shall be plastered uniformly with cement mortar one-half (1/2) inch in thickness mixed in proportions of one part of cement and two parts of clean, sharp sand.

Placing Pipe: Inlet and outlet pipes shall be of the same size and kind as the connecting pipe shown in the plans. They shall extend through the walls for a distance beyond the outside surface sufficient for the intended connections, and the concrete shall be constructed around them neatly so as to prevent leakage along their outer surface. The inlet and outlet pipes shall be flush with the inside of the wall.

Backfilling: Backfilling shall conform with the requirements specified in Section 2.

Adjusting Existing Structures: Existing manholes, catch basins, inlets, valve boxes, monument boxes, etc., within the limits of the proposed work, that do not conform to the finished grade of the proposed pavement, or to the finished grade designated on the plans for such structures, shall be cut down or extended, and made to conform to the grade of the new pavement, or to the designated grade of the structure if outside of the proposed pavement area. The materials and construction methods for this work shall conform to the requirements specified above.

Where manholes are to be raised, the adjustment may, at the Contractor's option, be made by the use of adjustable extension rings of the type which do not require the removal of the existing manhole frame. The extension device shall provide positive locking action and shall permit adjustment in height as well as diameter. The particular type of device used shall meet the approval of the Engineer.

Adjusting Structures: When an item of payment for adjusting manholes, valve boxes, inlets, or monument boxes is provided in the proposal, the number of such structures designated to be paid for under separate items, and which are satisfactorily adjusted, shall be paid for at the contract units prices each for Adjusting Inlets, Adjusting Manholes, Adjusting Valve Boxes, and Adjusting Monument Boxes.

For any of such types of these structures required to be adjusted but for which no separate item of payment is shown in the proposal for the specific type, payment shall be made under the item of Adjusting Miscellaneous Structures.

W-425.07 Drainage Structures

1. All inlets, manholes, and junction boxes shall, unless otherwise directed by the Engineer, be constructed as per design plans and applicable design standards. All manholes shall be Traffic Bearing type. It shall be the responsibility of the Contractor to assure that the designated sizes of the drainage structures meet the following criteria:

    a. The minimum distance from the top of the opening for the highest pipe to the bottom of the top slab shall be ten inches (10"); 12 inches from top of pipe to bottom of top slab, before "stack" is used.

    b. The minimum diameter for stack heights shall be thirty-six (36) inches.

    c. The minimum distance between pipe openings shall be nine (9) inches.

    d. For four-sided structures having openings in more than one corner, individual shop drawings must be submitted for prior approval.

2. If warranted by field conditions and directed by the Engineer, the Contractor shall, at such locations, construct brick drainage structures (in place of concrete drainage structures), according to the standards specified below:

    Brick construction shall be as follows:

a. Wall thickness minimum eight inches (8") up to eight feet (8') height, unless specified otherwise.

b. Wall thickness minimum twelve inches (12") up to twelve feet (12') height, unless specified otherwise.

c. Brick shall be laid in 1:2 (Portland cement-sand) mortar.

d. Before laying the bricks in mortar, the bricks shall be thoroughly sprinkled with clean water (not to saturation extent).

e. Brick for manhole and inlet structures shall be laid in stretcher courses, with every sixth course a header course.

f. All brick structures shall be plastered smooth inside also with 1/2-inch thick, 1:2 (Portland cement-sand) mortar.

g. No "unsound" brick shall be used. As a test, if a light hammer blow, with the brick held lightly in hand, does not produce a uniform crisp ringing sound, the brick shall be construed to have crack(s), or otherwise unsound and shall be rejected.

h. All bricks shall be solid.

3. No additional compensation shall be paid for brick structures. Brick and concrete shall not be used simultaneously in drainage structure walls. Walls of round structures shall be constructed of concrete only.

4. For all types of manholes, the top and bottom slab shall be as per applicable D.O.T. standards, even if brick is allowed to be used in the manhole walls. The following criteria shall apply to slab thicknesses and steel reinforcements:

a. Top and bottom slabs shall have same thicknesses and reinforcements in any manhole structure.

b. The minimum slab thickness and reinforcement shall be 8 inches thick and #6 bars at 6-inch centers both ways.

c. 4-foot by 6-foot (4' x 6') or larger manholes, including circular manholes with inside diameter of 5-feet (5.0') or larger, shall have 10-inch thick slabs with #7 bars at 6-

inch centers both ways.

d. Unless specified on the Plans, four-sided structures with both inside dimensions in excess of eight feet (8.0') and circular structures with inside diameter in excess of eight feet (8.0') shall not be covered by D.O.T. and the above criteria.

5. All grate inlets shall conform to the City of Tampa design standards.

6. Grates on inlets, as well as all other structures, shall be Traffic Bearing Type, unless specified otherwise, and subject to approval of the Engineer. All grate inlets shall be fitted with an approved metal frame at the top to seat the grates.

7. All Type-P manholes shall be bid at one average unit price regardless of size and shape. Similarly, all Type-J manholes will be bid at one average unit price regardless of size and shape unless indicated otherwise in the proposal.

8. The reinforcements and shapes for all drainage structures, unless directed by the Engineer otherwise, shall conform to the Plans and applicable design standards.

9. Vertical support columns (one in case of Type 5 inlet) shall be constructed by the Contractor, as a part of the D.O.T. Type 5 and 6 curb inlets, where and as directed by the Engineer.

10. The Contractor, if so directed by the Engineer in order to better meet site requirements, shall construct B-S-1, B-R-2, B-V-1, or B-R-1 type curb inlets in lieu D.O.T. Type 5 and 6 inlets and vice-versa without additional cost to the City. P-5 and P-6 inlets shall have 3-1/2-foot by 3-1/2-foot substructures unless oversize pipe is to be accommodated or otherwise directed by the Engineer. Legible, detailed plans of each inlet type shall be provided to the Contractor.

    Side openings in curb and grate type inlets may be specified in the Plans or by the Construction Engineer to meet site conditions. The Contractor shall provide such openings without any additional cost.

11. When precast drainage structures are requested as substitutions for poured in place concrete structures, the Contractor shall meet the following additional requirements:

    a. Minimum height of the base structure (manhole or inlet barrel), unless restricted by design, shall be 5 feet 0 inches before extending the structure height by another precast "barrel." The minimum height of the top (extension) precast "barrel" shall

be 1 foot 6 inches. "Barrel" extensions of less than 1-foot 6-inch height shall be cast in place with continuous reinforcement.

b. Four-sided structures may be considered as an alternate to circular structures, but not the reverse.

c. For substructures for the City-type curb inlets, unless specified otherwise, directed by the Engineer, or to accommodate larger pipes, the Contractor may use a 3-foot by 4-foot (inside dimensions) structure. This structure shall have same slab and wall thicknesses and steel reinforcing as specified for "Type E" grate inlet.

d. When circular structures are precast in accordance with ASTM C-478, minimum wall thickness shall be six inches (6") thick or as specified in ASTM C-478 for larger diameter structures.

e. The location of the pipe holes and adequate basic substructures height, unless directed otherwise by the Engineer, shall be the responsibility of the Contractor.

f. The Contractor shall submit shop drawings only as specified below:

(1) One each-typical for different type of structures.

(2) For structures directed by the Engineer, and/or requiring change with respect to design plans, or as otherwise required by these specifications.

g. Provide schedule of manufacture of the structures. No compensation shall be paid to the Contractor for unusable precast drainage structures.

h. Provide material testing acceptance reports by a licensed private laboratory verifying:

(1) that the structures were constructed in accordance with details shown on the Plans and/or Shop Drawings;

(2) the exact design criteria adhered to; if more than one, identify which criteria applies to which structures;

(3) the project title, project number, file number, date cast, structure, plan sheet number and station;

(4) reinforcement size, spacing and amount;

(5) concrete placement, curing and strength, and verification of concrete cover on reinforcement; and

(6) that the testing laboratory stamp is placed on each structure prior to shipment.

i. Cooperate with Department personnel regarding periodic inspection of the precast units and the precast operations.

12. All manhole and inlet structures shall be set on a minimum 6-inch thick layer of compacted number 57 size coarse aggregate unless noted otherwise in the Plans or Specifications, or unless the Engineer determines a thicker layer is required due to soil and/or water conditions. All such coarse aggregate shall be completely enveloped in non-woven filter fabric as directed by the Engineer.

Payment for the 6-inch thick layer of stone shall be included in the price of the structure. Payment for thicker layers of stone shall be made from the select bedding material (stone) pay item, if available, or as extra work.

13. All casting covers, such as for inlets and manholes, shall bear the appropriate City of Tampa identification for storm sewers and for sanitary sewers, as shown on the Plans and directed by the Engineer.

SECTION 430 - PIPE CULVERTS AND STORM SEWERS

W-430.01 General

The work specified in this section consists of furnishing drainage pipe and mitered end sections, conforming to these specifications and of the particular types, sizes, and dimensions shown in the plans. This work shall include the installation of the pipe and mitered end sections at the locations called for, in conformity with the lines and grades given, and the furnishing and construction of such joints and connections to existing pipes, catch basins, inlets, manholes, walls, etc., as may be required to complete the work as indicated in the plans.

W-430.02 Laying Pipe

General: Each section of pipe shall be inspected for defects before being lowered into the

trench. All pipe shall be carefully laid, true to the lines and grades given, with hubs upgrade and tongue end fully entered into the hub. When pipe with quadrant reinforcement, or circular pipe with elliptical reinforcement, is used, the pipe shall be installed in a position such that the manufacturer's marks designating "top" and "bottom" of the pipe shall not be more than five degrees from the vertical plane through the longitudinal axis of the pipe. Any pipe that is not in true alignment or which shows any settlement after laying shall be taken up and relaid without additional compensation.

Trench Excavation: The excavation of the trench for pipe culverts and storm sewers shall be as specified in Section 1.

Foundation: Where the foundation material is of inadequate supporting value, a suitable foundation shall be provided, as directed by the Engineer, by the removal of unsuitable material and replacing with suitable material as specified in Section 2. Where in the Engineer's opinion, the removal and replacement of unsuitable material is not practicable, he may direct alternates in the design of the pipeline, as required to provide adequate support. Should such alteration in the design result in an increase in the costs of the installation, an appropriate adjustment will not be considered as an adequate basis for extra compensation.

Pipe shall not be laid on blocks or timbers, or on other unyielding material, except where the use of such devices is called for in the plans.

Backfilling: The backfilling around the pipe shall be as specified in Section 2.

Plugging Pipe: When so shown in the plans, the ends of the pipe culverts shall be sealed with a masonry plug a minimum of eight (8) inches in thickness unless otherwise shown in the plans.

End Treatment: The end treatment required at each cross drain, side drain, or storm sewer pipe end is shown in the plans. Alternate types are permitted only when shown. Details for each type of end treatment are contained in the standard index drawings.

As an exception to the above, when concrete mitered end sections are permitted, reinforced concrete U-endwalls may be used but shop drawings must be submitted to the Engineer for approval prior to use.

Metal pipe Protection: To protect corrugated steel or aluminum pipe embedded in a concrete structure, such as an inlet, manhole, junction box, endwall, or concrete jacket, a bituminous coating shall be applied to the surface area of the pipe within and 12 inches beyond the concrete or mortar seal prior to sealing.

The surface preparation, application methods (dry film thickness and conditions during application), and equipment used shall be in accordance with the coating manufacturer's published specifications.

All coating products used must be approved by the Bureau of Materials and Research, Florida Department of Transportation, Gainesville, Florida.

The cost of furnishing and applying the bituminous material shall be included in the contract unit price for new pipe.

W-430.03 Removing and Relaying Existing Pipe

Removal: If the plans indicate that existing pipe is to remain the property of the City, all existing pipe or pipe arch so indicated in the plans to be removed or that does not conform to the lines and grades of the proposed work and that is not to be relaid, shall be taken up and stacked neatly along the right of way, as directed by the Engineer. Due care shall be exercised to prevent damage to salvageable pipe during removal and stacking operations.

Relaying: Where so shown in the plans, existing culvert pipe shall be taken up and cleaned and shall be relaid in the same manner as specified for new culvert pipe. Where necessary, existing metal pipe or pipe arch shall be straightened before it is relaid.

W-430.04 Placing Pipe Under Railroad

General: Pipe culverts to be constructed under railroad tracks shall be constructed in accordance with the requirements of the railroad company.

Unless the specific provisions specifically stipulate that the work of shoring under the tracks, and sheeting and bracing of the trench, is to be done by the railroad company, all such work required by the railroad company or deemed necessary by the Engineer in order to assure safe and uninterrupted movement of the railroad equipment, shall be done by the Contractor ar his expense.

Requirements of the Railroad Company: The method of installation shall be as required by the railroad company as specified in the specific provisions.

When the general method of installation which the railroad company will require is indicated in the plans, such method and any other specific details of the installation which might be indicated in the plans, shall not be changed without written approval of the Engineer, after the approval (or the direction) for such change has been obtained from the railroad.

Notification to Railroad Company; The Contractor shall notify the railroad company of the date on which he expects to begin the work of placing pipe under the railroad tracks at least ten days prior to such date.

Placing Pipe by Jacking: When the placing of the pipe through the railroad embankment is done by the jacking method, the details of the jacking method to be used must be approved by the Engineer and the railroad company before the work is started.

Use of Tunnel Liner: When the railroad company requires that a tunnel liner be used for placing the pipe in lieu of the jacking method, separate payment for the tunnel liner material will be made only in cases where the plans or specifications do not specifically provide that a tunnel liner will be required; in which cases the City will reimburse the Contractor for the actual cost of the liner, delivered at the site. Such cost shall be based on a liner having the minimum gauge acceptable to the railroad.

W-430.05 Specific Requirements for Concrete Pipe

Sealing Joints:

(1) Round Concrete Pipe Other than Side Drain: For all round concrete pipe other than side drain pipe, the pipe joints shall be sealed by the use of round rubber gaskets. When rubber gaskets are used, the pipe joints shall meet the requirements specified in Section W-942-1. The gasket and the surface of the pipe joint, including the gasket recess, shall be clean and free from grit, dirt, and other foreign matter at the time the joints are made. In order to facilitate closure of the joint, application of an approved vegetable soap lubricant immediately prior to closing of the joint will be permitted.

(2) Side Drain Pipe: For all concrete pipe which does not have rubber-gasket joints, the joints shall be thoroughly wetted before the inside mortar is placed; and before succeeding sections of the pipe are laid, the lower half of the joint portion of the pipe in place shall be filled on the inside with cement mortar and the upper half of the tongue portion of the next joint wiped with cement mortar, both in sufficient thickness to bring the inner surface of the abutting pipe flush and even, when the pipe is laid. After the pipe is laid, the inside of the joint shall be wiped and finished smooth and a mortar bead not less than 3/4 inch thick shall be formed completely around the outside of the joint.

Laying Requirements for Concrete Pipe with Rubber Gasket Joints: For concrete pipe

laid with rubber gasket joints, any deviation from true alignment or grade which would result in a displacement from the normal position of the gasket of as much as 1/4 inch, or which would produce a gap exceeding 1/2 inch between sections of pipe for more than 1/3 of the circumference of the inside of the pipe, will not be acceptable and where such occurs the pipe shall be relaid without additional compensation. Where minor imperfections in the manufacture of the pipe cause a gap greater than 1/2 inch between pipe sections, the joint will be acceptable provided the gap does not extend more than 1/3 the circumference of the inside of the pipe. No mortar, joint compound, or other filler which would tend to restrict the flexibility of the gasket joint shall be applied to the gap.

Field Joints for Elliptical Concrete Pipe: Field joints for elliptical concrete pipe will be detailed in the plans or may be made with a preformed plastic gasket material. Pipe to be laid with joints made from preformed plastic material shall be subject to the following requirements:

(1) General: Installation shall be in accordance with the manufacturer's instructions and these specifications. The Contractor shall be responsible for obtaining a permanent watertight joint.

(2) Material: The preformed gasket material shall conform to the requirements of Section W-942-2.

(3) Joint Design: The pipe manufacturer shall furnish the Engineer with details in regard to configuration of the joint and the amount of gasket material required to effect a satisfactory seal. Joint surfaces which are to be in contact with the gasket material shall not be brushed or wiped with a cement slurry. Minor voids may be filled with cement slurry provided that all excess cement slurry is removed from the joint surface at the point of manufacture.

(4) Primer: Prior to application of the gasket material, a primer of the type recommended by the manufacturer of the gasket material shall be applied to all joint surfaces which are to be in contact with the gasket material. The surface to be primed shall be thoroughly cleaned and dry when the primer is applied.

(5) Application of Gasket: Prior to placing a section of pipe in the trench, gasket material shall be applied to form a continuous gasket around the entire circumference of the leading edge of the tongue and the groove joint in accordance with the detail entitled "Detail for Application of Gasket Material (Before Joint Pull-Up)." The paper wrapper on the exterior surface of the gasket material shall be left in place until immediately prior to joining of sections. The gasket material shall be checked to assure that it is bonded to the joint surface, immediately prior to placing

a joint in the trench. Plastic gasket material shall be applied only to surfaces which are dry. A hand heating device shall be kept at the job site to dry joint surfaces immediately before application of the plastic gasket material. When the atmospheric temperature is below 60 degrees F., plastic joint seal gaskets shall either be stored in an area warm to above 70 degrees F., or artificially warmed to this temperature in a manner satisfactory to the Engineer.

(6) Installation of Pipe: Handling of a section of pipe after the gasket material has been affixed shall be carefully controlled to avoid displacement of gaskets or contamination of gasket material with dirt or other foreign material. Any gasket displaced or contaminated in handling of the pipe shall be removed and repositioned or replaced as directed. The pipe shall be installed in a dry trench. The bottom of the trench shall be carefully shaped so as to minimize the need for realignment of sections of pipe after they are placed in the trench. Care shall be taken to properly align each section of pipe prior to the gaskets coming into contact. Realignment of a joint after the gaskets come into contact tends to reduce the effectiveness of the seal and shall be held to a minimum. When the pipes are joined, the entire joint shall be filled with gasket material and there shall be evidence of squeeze-out of gasket material for the entire internal and external circumference of the joint. Excess material on the interior of the pipe shall be trimmed to provide a smooth interior surface. After the pipe is in its final position, the joint shall be carefully examined to determine that the gasket material is satisfactorily adhering to all surfaces of the joint and that the entire joint is filled with gasket material. If a joint is defective, the leading section of pipe shall be removed and the joint resealed.

Requirements for Concrete Radius Pipe:

Design: Concrete radius pipe shall be constructed in segments not longer than four feet (along the pipe centerline), except where another length is called for in the plans or the specific provisions. Each segment shall be joined by round rubber gaskets. The pipe manufacturer shall submit details of his proposed joint and the segment length and shape for approval by the Engineer prior to manufacture.

Pre-Assembly: Prior to acceptance of the pipe, the manufacturer shall pre-assemble the entire radius section in his yard to assure a proper fit for all parts. This assembly may be made without gaskets at the option of the manufacturer. Upon satisfactory assembly, the joints shall be consecutively numbered on both the interior and exterior surfaces of each joint, and match marks showing proper position of joints shall be made. Installation on the project shall be in the order of pre-assembly.

W-430.06 Field Joints for Aluminum Pipe

General: Field joints for aluminum pipe shall be made with bands fabricated of the same alloy as the culvert sheeting and shall meet the requirements of AASHTO M 196.

Aluminum Cross Drains, Storm Sewers, and Gutter Drains: The provisions specified above for corrugated steel pipe for these installations shall apply also to aluminum pipe (for circular and helical corrugations) except that the material used in the bands and band connections for the alternate combination of joint materials shall be fabricated of the same alloy as the culvert sheeting.

W-430.07 Joints in Cast Iron Pipe

The provisions of Section 430.07 for mortaring and wetting inside the joints, as specified for concrete side drain pipe without rubber gaskets, shall apply to the inside joints of all cast iron pipe.

* * *

SCHEDULE A – WATER MATERIAL SPECIFICATIONS

GENERAL REQUIREMENTS

All materials shall be in accordance with these Material Specifications and shall, in no event, be less than that necessary to conform to the requirements of any applicable law, ordinances and codes. All materials or products that will be in contact with potable water shall be listed by the National Science Foundation (NSF-61 listed) or by an approved certifying agency as conforming to the requirements of ANSI/NSF-61.

Materials provided for construction on or for the City’s reclaimed water distribution system shall be in accordance with color coding specifications provided in the Florida Administrative Code (F.A.C.), Chapter 62-610. All piping, pipeline appurtenances (including valves and outlets) shall be color coded to differentiate reclaimed water from domestic or other water. Underground piping which is not manufactured of metal shall be color coded or marked for reclaimed water distribution systems using Pantone Purple 522C using light stable colorants - underground metal pipe shall be color coded using purple as a predominant color. Visible, above-ground portions of the reclaimed water distribution system shall be clearly color coded or marked. All reclaimed water valves shall be appropriately tagged or labeled (bearing the words in English and Spanish: “Do not drink” together with the equivalent standard international symbol) to warn the public and employees that the water is not intended for drinking.

Items designated to be “domestically manufactured” shall be manufactured, assembled and tested in their entirety within the United States of America or its territories. Items designated to be “domestically assembled” may be foreign-manufactured but shall be assembled and tested in their entirety within the United States of America or its territories. Items requiring a “domestic presence” may be foreign-manufactured and/or assembled and/or tested, but the manufacturer shall have a designated representative or agent located within the United States of America, and that representative or agent shall be available to provide on-site service if required by the City of Tampa Water Department (Department).

All materials shall be new, unused, and correctly designed. They shall be of standard first grade quality, produced by expert workmen, and intended for the use for which they are offered. Materials or equipment which, in the opinion of the Department, are inferior or are lower grade than indicated, specified or required, shall not be accepted. All materials used in this contract must be approved in advance by the Engineer. In conformance with section G-4.02 of these contract documents, any two items of the same kind, type or classification, and being used for identical types of service, shall be made by the same manufacturer. Unless approved in advance by the engineer, only one manufacturer may be used for each item under this contract.

POLYETHYLENE ENCASEMENT

1. GENERAL

Polyethylene encasement shall conform to the requirements of ANSI/AWWA C-105/A21.5 Method A and shall be 8-mil thick. Polyethylene encasement shall be installed on all buried ductile iron pipe, fittings, valves, and appurtenances where shown on the drawings or as directed by the Water Department as dictated by field conditions. It shall be blue in color.

2. PRODUCT

The raw material used to manufacture polyethylene encasement shall be Type 1, Class A Grade E-1 in accordance with ASTM D-1248

The polyethylene encasement shall meet the following test requirements:

Tensile Strength	1200 psi minimum
Elongation	300% minimum
Dielectric Strength	800 V/Mil thickness, minimum
Thickness	0.008” (8-mils (minimum nominal, with minus tolerance < 10% of nominal)
Melt Index	0.4 maximum

3. QUALITY CONTROL AND TESTING

When submitting for approval polyethylene not listed in Section 4, manufacturer shall include drawings and brochures that clearly indicate size, dimensions, weights, performance standards, etc. If this documentation is omitted, the polyethylene may be rejected at the sole option of the City.

4. MANUFACTURER

All polyethylene encasement shall be domestically manufactured.

CASING SPACERS

1. GENERAL

Casing spacer sleeves shall be used to cradle carrier pipe through casing pipe.

2. PRODUCT

Casing spacer sleeves provided shall be either:

a. two-piece, 12-gauge stainless steel strap which is heat fused PVC coated. Sleeve runners shall

be a ultra-high molecular weight polymer with high resistance to abrasion and sliding wear. Runners shall be 2-inch or 2-½ inch in height. Or,

b. projection type spacers, composed of a single-piece HDPE strap providing constant projections around the entire circumference of the carrier pipe. The minimum number of projections to be provided around the circumference shall total the number of diameter inches of the carrier pipe. Manufacturer-provided double-backed tape shall be used to fasten the HDPE casing spacer strap tightly to the carrier pipe so that the spacers do not move during installation. Selection of spacer type and installation shall be in accordance with manufacturer’s installation guidelines and recommendations.

Projection type spacers shall be ISO 9002 certified for strength and quality.

3. QUALITY CONTROL AND TESTING

When submitting for approval of a casing spacer not listed in Section 4, include manufacturer drawings/brochures that clearly indicate size, dimensions, weights, performance standards, etc. If this documentation is omitted, the casing spacer sleeves may be rejected at the sole option of the City.

4. MANUFACTURER

Casing spacer sleeves shall be Raci Spacers North America Inc “RACI Projection-type HDPE Casing Spacer”, Cascade Manufacturing “CCS-450-1740” or “CCS-ER”, PSI CG-2 series, or approved equal.

PRE-CAST THRUST BLOCKS

1. GENERAL

Concrete precast thrust blocks shall be manufactured to the dimensions shown with the Standard Detail "Precast Concrete Thrust Blocks".

2. PRODUCT

The concrete for thrust blocks shall consist of a uniform mix of Portland cement, sand and gravel. The mix shall be proportioned and shall provide a dense concrete with a minimum compressive strength of 3,000 psi in 28 days. All material used in mixing concrete shall meet Florida Department of Transportation specifications.

3. QUALITY CONTROL AND TESTING

When submitting for approval precast concrete thrust blocks for approval include drawings and brochures that clearly indicate size, dimensions, weights, performance standards, etc. If this documentation is omitted, the precast concrete thrust block may be rejected at the sole option of the City.

4. MANUFACTURER

Not Specified.

TRANSITION COUPLING

1. GENERAL

Transition coupling shall be used to connect two plain end pipes of equal or slightly different outside diameters. Transition coupling shall also be used to connect different types of pipe. The transition coupling shall operate by placing two plain ends of pipe inside a rigid sleeve, and drawing in two compression glands upon two un-cut full circle gaskets to produce a seal between the ends of the rigid sleeve and the adjacent outside wall of the existing pipe.

2. PRODUCT

a. Transition coupling shall be composed of three parts: rigid sleeve, compression glands, and gaskets.

b. The rigid sleeve shall be manufactured of ferrous material that is protected against corrosion by epoxy coating or approved method during the working life of the fitting. The rigid sleeve shall be the "long-body" type.

c. The compression gland shall be manufactured of ferrous material that is protected against corrosion during the working life of the fitting by epoxy coating or approved method. The glands shall be drawn in mechanically by bolts and nuts made of high-strength, low-alloy steel such as "Corten", "Usalloy", or "ACIPalloy".

d. The gasket shall be EPDM. The gasket shall be resistant to permanent set during the working life of the fitting.

e. Transition coupling for nominal size pipe of 2-inch shall be capable of connecting McWane enamel cast iron pipe to 2-inch PVC, SDR 21, pipe. Working pressure ratings shall be:

Type of Pipe	Size (in.)	Rated Pressure	O.D.
McWane Cast Iron	2	200	2.50
McWane Cast Iron	2.25	200	2.75
PVC (SDR 21)	2	200	2.38

The transition coupling shall be manufactured to meet these stated diameters.

f. Transition coupling for nominal size pipe, 3-inch and greater, shall be capable of joining standard ductile iron pipe to pit cast iron pipe Class C-D, Asbestos-Cement pipe, PVC sch 40, PVC sch 80, or PVC pressure rated pipe. Transition coupling shall join different diameter pipes by the following means:

1) by a coupling designed for stated diameters,

2) by a coupling designed with a variable range using a compressible gasket,

3) by a coupling with a variable range using different gaskets,

4) or a coupling using any combination of described designs.

3. QUALITY CONTROL AND TESTING

When submitting for approval transition coupling not listed in Section 4, manufacturer include drawings and brochures that clearly indicate size, dimensions, weights, performance standards, etc. If this documentation is omitted, the transition coupling may be rejected at the sole option of the City.

4. MANUFACTURER

Transition coupling for nominal size pipe 2 to 3 inches shall be Baker 200, Ford FCI/2/3, Dresser 38/138/40, JCM 212, Rockwell 411/413/431/441/433, ROMAC 602 Viking Johnson, or approved equal.

Transition coupling for nominal size pipe 3-inches and greater shall be Baker 200/204/213, Ford FCI/2/3, Dresser 38/138/40/162, Rockwell 411/413/431/433/441, JCM 212, Mueller H1020, ROMAC 501/602 Viking Johnson, or approved equal.

BRASS FITTINGS

1. GENERAL

All brass fittings for service lines shall be included under this specification. Brass fittings include any and all required accessories.

2. PRODUCT

a. All fittings shall be manufactured of brass, cast and machined in accordance with AWWA Standard C-800, latest revision.

b. All fittings shall perform in accordance with AWWA C-800, latest revision.

c. All fittings shall be certified as suitable for contact with drinking water in accordance with ANSI/NSF Standard 61, Drinking Water Components – Health Effects, Section 8. Certification shall be by an accredited certification organization or by a laboratory able to demonstrate that the NSF 61 lead testing protocol was followed.

d. All brass fittings shall comply with Florida Administrative Code (F.A.C.) 62-555 (latest revision), the Safe Water Drinking Act, as amended, and the U.S Environmental Protection Agency (E.P.A.).

e. All brass fittings shall be made of a “No-Lead Brass”, defined for this specification as brass alloy containing not more than one fourth of one percent (0.25% or less) total lead when used with respect to the wetted surfaces of the fitting, as defined by NSF/ANSI 61, Annex G and Annex F.

f. All brass fittings shall be integrally stamped or cast with the manufacturer's name and a marking or trademark identifying that the fitting contains a “no lead” brass alloy (as defined herein), e.g., ‘NL’, ‘EB2’, or ‘FED’, etc.

g. Manufacturer shall provide a copy of a letter from NSF International (on NSF letterhead) documenting compliance with NSF/ANSI 61 Annex F.

h. All curb stops/meter valves shall be full-port and have a flow passage area equivalent to the fitting outlet flow area.

i. Curb stops shall be of the ball valve design with a full-port opening ball no less than 3/4-inch. Curb stops shall be provided with padlock wings cast on stop body and operating tee cap to provide for locking the stop in closed position. Curb stops for use with copper or plastic service shall have an inlet connection with a compression joint and an outlet connection with female iron pipe thread (FIP), as manufactured by Ford Meter Box Company (FMBC) B41W; Mueller P-25170N; A.Y. McDonald 6102W-22, or approved equal. Curb stops with Inside Iron Pipe Thread (FIP) inlet connections and an Inside Iron Pipe Thread outlet connections shall be FBMC B11W, Mueller B-20200, A.Y. McDonald 6101W, or approved equal.

j. Meter valves shall be of the ball valve design with a full-port opening ball no less than 3/4-inch. Meter valves shall be provided with padlock wings cast on stop body and operating tee cap to provide for locking the stop in closed position. Meter valves for use with copper or plastic service shall have an inlet connection with a compression joint and a swivel nut outlet connection - angle meter valve: FBMC BA43W, Mueller P-24258N, A.Y. McDonald 4602B-22, or approved equal; straight meter valve: FBMC B43W, Mueller P-24350N, A.Y. McDonald 6100MW-22, or approved equal. Straight meter valves with Inside Iron Pipe Thread inlet (FIP) and a Meter Swivel Nut outlet connection shall be: FMBC B13W; Mueller B-24351N; A.Y. McDonald 6101MW, or approved equal.

k. Corporation stops shall be of the ball valve design. Corporation stop inlet connection shall be the AWWA Taper thread. The outlet connection shall be a CTS pack-joint for copper or plastic tubing. Corporation stops for sizes 3/4” – 2” shall be: FMBC FB-1000, A.Y. McDonald 4701B-22, Mueller P-25008N, or approved equal.

l. Meter re-setters shall be designed for use with standard 5/8”x3/4" and 1” water meters. Resetters shall be constructed from brass fittings conforming to the specifications herein, with copper riser pipes. An angle ball valve shall be provided on the inlet riser, saddle nuts and gaskets on inlet and outlet. Pipe connections shall be (nominal) male iron pipe size meter thread on both inlet and outlet. Meter re-setters shall be FMBC VB40 Series, Mueller B-24118R, A.Y. McDonald Series 18, or approved equal.

m. Branch connections shall be brass construction with copper compression joint inlet and male iron pipe size outlets, as manufactured by FMBC U48, Mueller P-15363N, A.Y. McDonald 08U2M, or approved equal.

3. QUALITY CONTROL AND TESTING

Certification of the aforementioned standards must be available and provided, if requested by the City of Tampa. If requested, an Affidavit of Compliance to these standards and specifications shall be signed and submitted by an officer of the manufacturing firm. When submitting for approval of brass fittings not listed in Section 3 & 4, include manufacturer drawings and brochures that clearly indicate size, dimensions, weights, performance standards, etc. If any of this documentation is omitted, the brass fittings may be rejected at the sole option of the City.

4. MANUFACTURER

The brass fittings shall be domestically manufactured by Mueller Company, Ford Meter Box Company, A.Y. McDonald Mfg. Company, or approved equal.

THREADED BRASS FITTINGS

1. GENERAL

Threaded brass fittings provided under this specification shall be manufactured in accordance with specifications stated herein.

2. PRODUCT

a. Threaded brass fittings ("Fittings") provided shall be manufactured in accordance with ANSI B16.15., 125 lb.

b. Fittings shall be of material conforming to ASTM B62 or B584.

c. Threads on all fittings shall be N.P.T. in conformance with ANSI B1.20.3, right hand and shall be smooth, clean and true to form.

d. Fittings shall be legibly cast or dye stamped such that the manufacturer's name, initial or other mark can be easily identified.

e. All fittings shall be certified as suitable for contact with drinking water in accordance with ANSI/NSF Standard 61, Drinking Water Components – Health Effects, Section 8. Certification shall be by an accredited certification organization or by a laboratory able to demonstrate that the NSF 61 lead testing protocol was followed.

f. All brass fittings shall comply with Florida Administrative Code (F.A.C.) 62-555 (latest revision), the Safe Water Drinking Act, as amended, and the U.S Environmental Protection Agency (E.P.A.).

g. All brass fittings shall be made of a “No-Lead Brass”, defined for this specification as brass alloy containing not more than one fourth of one percent (0.25% or less) total lead when used with respect to the wetted surfaces of the fitting, as defined by NSF/ANSI 61, Annex G and Annex F.

h. All brass fittings shall be integrally stamped or cast with the manufacturer's name and a marking or trademark identifying that the fitting contains a “no lead” brass alloy (as defined herein), e.g., ‘NL’, ‘EB2’, or ‘FED’, etc.

i. Manufacturer shall provide a copy of a letter from NSF International (on NSF letterhead) documenting compliance with NSF/ANSI 61 Annex F.

3. QUALITY CONTROL AND TESTING

Certification of the aforementioned standards must be available and provided, if requested by the City of Tampa. If requested, an Affidavit of Compliance to these standards and specifications shall be signed and submitted by an officer of the manufacturing firm.

4. MANUFACTURER

None specified.

SERVICE SADDLES

1. GENERAL

Service saddles shall be used for tapping water distribution pipes to provide a drip-tight connection to the main for customers' water meters. Service saddles shall incorporate a wrap-around type body, straps, gasket and bolts. When installed, the body shall wrap around the main for a minimum of 160 degrees.

2. PRODUCTS

a. Service saddle for pipe less than 3-inches shall be single band which is hinged or split from the saddle body and is anchored by bolting one or more bolts between the band and saddle body, or a double strap design anchored by four bolts.

b. Service saddles for pipe equal to or greater than 3-inches shall use a double-wide single flexible band or a double strap with a minimum of a four bolt pattern anchoring. These service saddles shall provide for a variable range in diameter per nominal size of pipe, yet shall fit the stated diameter for the nominal size pipe noted.

c. Service saddles shall be constructed from bronze, ductile iron in accordance with ASTM A536, or stainless steel and shall seal to the distribution pipe by an EPDM rubber gasket. The gasket shall maintain a resilient seal without cracking or becoming brittle during the working life of the service saddle. All service saddles shall have corporation tap threads.

d. Threads shall be AWWA CC in accordance with AWWA C-800.

e. Gasket shall be of self-sealing design.

f. Service saddle bodies shall be protected with a heavy coating of corrosion resistant, metal primer.

g. Service saddles provided shall be suitable for use with water of 100 degrees Farenheit and pressure up to 150 psi without rupture and failure.

h. Straps and bolts shall be carbon steel confirming to ASTM A108, electro-galvanized with dichromate seal.

3. QUALITY CONTROL AND TESTING

When submitting for approval of a service saddle not listed in Section 4, include manufacturer drawings and brochures that clearly indicate size, dimensions, weights, performance standards, etc. If this documentation is omitted, the service saddle may be rejected at the sole option of the City.

4. MANUFACTURER

Service saddles for 2-inch or less pipe and 3-inch or greater pipe shall be as follows:

2-inch or less:

Clow 3401	Ford 570/590	JCM 401/402/403/405 (DI)
Jones J-995	Rockwell 313/317	Ford FS-/ FC-202; F101/202
Smith Blair 311		Mueller H-13420/10475-76

3-inch or greater:

Cascade C-S22/CDS2/CNS2/CSC2	Mueller H-105XX series
Rockwell 313 (DI) /317/323	Clow 3408/3410
JCM 402 cortin strap (for DIP)	Smith Blair 311
Ford FS- or FC-202 series	JCM 406 (for PVC)

or approved equal.

BLOW-OFF ASSEMBLY

1.0 GENERAL

Blow-off assemblies shall be used to remove sediments and stagnant water from non-looping or "dead-end" water lines.

2.0 PRODUCT

2.1 GENERAL

a. There are two approved Std. Construction Details for blow-off assemblies - one for four-inch and larger pipe, the second for two-inch pipe.

b. The Contractor shall furnish all parts for the complete assembly, including but not necessarily limited to gate valves, hydrant adapters, meter boxes, valve boxes, caps or plugs on the water main, a cap on the hydrant adapter, one MJ restraining device or MJ adapter for the cap or plug on the main and all related appurtenances.

c. The outlet shall have 2-1/2-inch fire hydrant threads and a cap.

2.2 BLOW-OFF ASSEMBLY for 4-INCH AND LARGER PIPE

a. Blow-off assembly shall connect to the end of the existing pipe through a tapped plug or cap. A two-inch corporation shall be threaded into the tapped cap/plug. Two-inch HDPE tube shall run from the two-inch corporation to a two-inch gate valve.

b. The gate valve shall have a standard operating nut and have a standard valve box, brought to grade in conformance with the appropriate standard detail.

c. Two-inch HDPE tubing shall run from the gate valve and terminate in 2-1/2-inch NST by 2-inch MIP brass hydrant adapter. The adapter shall have a threaded cap and shall be placed in a #37 meter box, set to grade.

2.3. BLOW-OFF ASSEMBLY for 2-INCH PIPE

a. A two-inch gate valve shall be installed on the two-inch pipe.

b. The gate valve shall have a standard operating nut and have a standard valve box, brought to grade, in conformance with the appropriate standard detail.

c. Two-inch HDPE tubing shall run from the gate valve and terminate in 2-1/2-inch NST by 2-inch MIP brass hydrant adapter. The adapter shall have a threaded cap and shall be placed in a #37 meter box, set to grade.

3. QUALITY CONTROL AND TESTING

The installation shall conform to the appropriate Standard Detail.

AIR RELEASE VALVES
(Compound Lever Type)

1. GENERAL

Air Release Valves shall be manufactured in accordance with AWWA C512 or latest revision, and shall adhere to the following specification.

2. PRODUCT

The air release valve shall be of the float operated, compound leverage type, and be capable of automatically releasing accumulated air from a fluid system while that system is in operation and under pressure.

To ensure drip-tight shut off, a buna-n orifice button shall be used to seal the valve discharge orifice. The orifice diameter must be sized for use within a given operation pressure range to insure maximum discharge capacity.

Air release valves shall be provided with a vacuum check to prevent air from re-entering the system on negative pressure.

All internal trim metal subject to wetting shall be stainless steel. The float shall be of stainless steel construction and capable of withstanding a pressure of 1,000 p.s.i.

Air release valves shall be installed inside of a Charles Industries fiber optic pedestal (Part No. CP210-NLP), in accordance with Department Details 2.14 (Automatic Air Release Valve) and 2.15 (Pedestal for Automatic Air Release Valve), having a buried, split, square base with a low-profile above-grade dome.

3. QUALITY CONTROL AND TESTING

When submitting for approval of air release valve not listed in Section 4, the Contractor shall include drawings and brochures that clearly indicate size, dimensions, weights, performance standards, etc. If this documentation is omitted, the air release valve may be rejected at the sole option of the City.

4. MANUFACTURER

Air release valves shall be Val-Matic Valve and Manufacturing Corp. “Model No. 38VC”; APCO “Model 200, with vacuum check”, or approved equal. Pedestal shall be Charles Industries fiber optic pedestal (Part No. CP210-NLP).

VAULT SLABS AND COVERS

1. GENERAL

Vault slabs and covers shall adhere to all specifications stated herein.

2. PRODUCT

Vault slabs shall be constructed of reinforced concrete or reinforced polymer concrete. Vault slabs shall be dimensioned as shown in Tampa Water Department Standard Detail, Vault Concrete Slab Detail.

a. Concrete Vault Slabs

1) The concrete shall consist of a uniform mix of Portland cement, sand, and gravel. The mix shall provide a dense concrete with a minimum compressive strength of 4,500 psi in 28 days. The gravel shall be a clean, physically sound, high density, well graded, washed pea gravel with a maximum size of ½-inch. The sand shall be sharp, clean and well graded. All material used in mixing concrete shall meet Florida Department of Transportation specifications. The water/cement ratio by weight shall be less than .45 and the slump shall be kept to a minimum of 3-inches and a maximum of 4-inches. The top surface of all slabs shall be a broom finish.

2) All concrete vault slabs shall be reinforced with rebar through out the slab with welded wire fabric around the lift loop depressions. The rebar shall be Grade 60, No. 6 in all top slabs and Grade 60, No. 4 in all bottom slabs. All lift loops shall be Grade 60, No. 4 rebar and shall be dimensioned as shown in construction standard entitled "Lift Loop." All lift loop depressions shall be centered in a 9 hole square pattern of 6" x 6" welded wire fabric.

b. Reinforced Polymer Concrete Vault Slabs

The polymer concrete shall consist of a mix of polymer resin, course sand, fine sand and shall be reinforced with layers of woven fiberglass to withstand a minimum of an H-10 loading. Polymer

concrete shall have a minimum compressive strength of 12,000 psi. Thickness of polymer concrete vault slabs may be less than shown in the Tampa Water Department Standard Detail, Vault Concrete Slab Detail, provided the minimum H-10 loading requirements are met. Polymer concrete vault slabs shall be provided with Lift Loops as described in this standard and as shown in the Standard Detail.

c. Vault Covers

Top vault slabs shall be provided with a reinforced polymer concrete vault cover ("Vault Cover"). Vault cover frames in concrete vault slabs shall be fabricated of steel, cast flush into the top surface of the top vault slab, and dimensioned as shown in the above referenced Standard Detail. Vault covers shall be reinforced polymer concrete as specified in 2.b. above and dimensioned as shown in the Standard Detail. Vault covers shall be bolt down with ½-inch penta head corrosion resistant bolts and shall not exceed 150 lbs. in weight. Each vault cover shall have the City embossed seal as shown in the above referenced Standard Detail. Vault covers shall be provided with 3/4" x 2" lifting holes with lift loops for engaging a raising hook to remove the vault cover.

3. QUALITY CONTROL AND TESTING

a. When submitting for approval of a vault slab and/or cover not listed in Section 4, the Contractor shall include drawings and brochures that clearly indicate size, dimensions, weights, performance standards, etc. If this documentation is omitted, the vault slab and/or cover may be rejected at the sole option of the City.

b. The Contractor shall submit manufacturer's certification of loading limits of Vault Slabs and Covers to be provided under this contract. Failure to submit manufacturer's certification may result in rejection of the vault slab and cover.

4. MANUFACTURER

a. Reinforced polymer concrete vault slabs shall be CDR Systems WP series or equal.

b. Reinforced polymer concrete vault covers shall be CDR Systems C10- 3048-03W or equal.

WATER METER BOXES & COVERS

1. GENERAL

HDPE (high density polyethylene) water meter boxes shall be manufactured in accordance with these specifications.

Meter box covers ("Covers") provided under this specification shall be ductile iron with hinged reading lid (where specified) or black HDPE without reading lid. Covers provided shall be designed to withstand incidental (“standard”) loading or heavy traffic loading as specified herein.

Meter boxes and meter box covers provided shall be in accordance with City of Tampa Water Department “Standard Dimension Details” for meter boxes (see Std. Details 5.10, 5.10A, 5.11, 5.11A and 5.12).

2. PRODUCT

a. HDPE Meter Boxes

1) The HDPE meter box shall be 100% homogenous high-density polyethylene of one-piece molded construction, with dimensions as shown in the referenced drawings. The box shall be tested to withstand a freestanding 20,000 lb. vertical load and a sidewall loading of 180 pounds per square inch. All edges shall be clean and smooth for safety during handling. Exterior wall shall be of smooth finish, black in color, and have ultraviolet degradation protection properties for above ground storage. Interior wall shall be of smooth finish and color shall be black or white. Meter boxes shall not exceed 25 lbs. in weight, shall have pre-cut pipe entry areas, and shall be designed to be securely stackable.

b. Meter Box Covers

1) Ductile Iron Cover

i. All “standard” ductile iron (DI) meter box covers shall be manufactured to meet or exceed requirements of ASTM A-536 “Standard Specification for Ductile Iron Castings”, latest edition, and shall be designed to meet the requirements for AASHTO Incidental Traffic H-10 loading. All “extra-heavy” covers shall meet the requirements for AASHTO Full Traffic H-20 loading.

ii. DI covers must be certified by the ductile iron manufacturer and by an independent testing laboratory. DI covers shall be designed and manufactured to withstand a minimum compressive load of 20,000 lbs. on a 9-inch square load area.

iii. All DI meter box cover castings shall be surface pre-treated with a phosphate wash, rinse, and sealer before drying. The coating shall be a polyester based powder (to provide corrosion, impact and UV resistance), electrostatically applied and heat-cured. The coating shall be Mega-Bond by EBAA Iron, or approved equal.

2) Ductile iron “standard” meter box covers shall include hinged reading-lids as specified in City of Tampa Water Department “Standard Dimension Details” for meter boxes. Extra-heavy covers shall be solid without reading-lids.

3) All HDPE “standard” meter box covers shall be polyethylene of one-piece molded construction, with dimensions and lettering as shown in the referenced meter box drawings.

4) All HDPE “standard” meter box covers shall be designed to meet the requirements for

AASHTO Incidental Traffic H-10 loading. All HDPE “extra-heavy” covers shall meet the requirements for AASHTO Full Traffic H-20 loading.

5) Certification must be provided by the manufacturer and by an independent testing laboratory that lids provided meet the respective loading requirements.

6) All covers shall have UL/FM approvals.

7) All covers under this specification shall be sized to fit the appropriate Brooks Products, Inc., Orlando, Florida concrete meter boxes, numbers 36, 37, 66 and Dual H:

Description	¾" Dual	1" Single	1½"-2" Single
Meter Box Type	**Dual H**	**#37**	**#66**
Meter Box Cover	16-9/16” x 14-9/16"	18-1/8" x 11-1/4"	30-1/2" x 17-1/2"
Hinged Reading Lid	4-5/8" x 7-5/8"	4-5/8" x 7-5/8"	6½" x 9½"

7) Ductile iron reading lids shall be manufactured to meet or exceed requirements of ASTM A536, latest edition.

8) Reading lids shall be supplied with a slot for engaging a raising-hook, to permit reading the enclosed water meter without removing the box cover. Reading-lids shall be made of ductile iron, hinged, and secured in place by a suitable stainless steel (Type 304) hinge pin.

c. Meter boxes shall be dimensioned to accommodate meter box covers as specified.

3. QUALITY CONTROL AND TESTING

a. The Contractor shall furnish engineering performance data at the time of submittals for each size meter box and cover proposed for use. Such data shall contain but may not be limited to: 7-day and 28-day concrete compression tests, sieve analysis of aggregates, water/cement ratio and curing process, and any other applicable tests as required.

b. The Contractor shall furnish two sets of shop drawings at the time of submittals, for boxes and covers which differ from the standards. The shop drawings shall note the dimension, thickness and tolerances to allow review of material.

The Water Department may request that the Contractor furnish a sample of each type of meter box and cover proposed for use. This sample shall be returned to the Contractor at the Contractor's expense. Failure to submit samples, if requested, may result in the rejection of the item.

c. All covers must offer a minimum of a full 10-year warranty against defects, breakage, etc., under normal use conditions.

4. MANUFACTURER

All covers shall be domestically manufactured. Meter boxes (and covers) provided shall be equal to or better than:

Old Castle Precast Enclosures, Mount Sterling, KY: “MSBCF Style” HDPE meter boxes

Ductile iron covers: covers manufactured for Old Castle Precast Enclosures by East Jordan Iron Works

DFW Plastics models (HDPE meter box and HDPE cover):
(for ¾” or 1” meter set) DFW37C-1EA TPA-LID & DFW37C-12-BODY; DFW36C-1EA TPA-LID;
(for ¾” or 1” dual meter set) DFW39C-1EA TPA-LID & DFW39C-12-BODY;
(for 1-1/2” or 2” meter set) DFW1730C-1EA TPA LID & DFW1730CH-12-BODY.

RESTRAINT DEVICES for DUCTILE IRON PIPE
(for Push-on-, Mechanical-, and Flanged Joint Pipe and Fittings)

1. GENERAL

Mechanical restraint devices shall be used to restrain plain ends of ductile iron pipe to push-on, mechanical, or flange joints, or fittings which meet ANSI/AWWA C-110/A21.10 and ANSI/AWWA C-111/A21.11, latest revisions.

Wedge action restraint for mechanical and flange joint pipe and fittings shall be incorporated in the design of the follower gland and shall include a restraining mechanism (the lug) which, when activated, imparts multiple wedging actions against the pipe, thereby increasing its restraint on the pipe as the joint tries to separate. “Twist-off nuts” shall be used to ensure proper actuating of the restraining device.

2. PRODUCT

a. Push-on Joint Restraint (for 4" - 36" pipe only)

Restraint of push-on joint pipe shall be with “locking gaskets”, consisting of an EPDM rubber gasket with high-strength stainless steel locking elements vulcanized into the gasket, which when activated develop wedging action between the pairs of stainless steel elements spaced around the gasket.

b. Flange Joint Restraint

Flange joint restraint fittings shall include all individually activated gripping wedges and gaskets. Flange joint restraint fittings shall attach to the plain end of a pipe by wedge screws to produce a flange which joins to an existing integral companion flange. Flange joint restraint fittings shall be constructed of ductile iron meeting ASTM A536 and manufactured in accordance with ANSI/AWWA C-110/A21.10 (or C-153/A21.53) and C-111/A21.11, latest revision. All flanges shall have bolt circle and bolt holes which match a Class 125 flange and are compatible with ANSI/AWWA C-115/A21.15. Gasket shall be made of EPDM rubber.

c. Mechanical Joint Restraint

The wedge action follower glands shall be manufactured of ductile iron conforming to ASTM A536-80. The wedging lug and bolt shall be manufactured of ductile iron which has been heat-treated to a minimum hardness of 370 BHN.

Wedge action glands shall be dimensioned such that they can be used with standard mechanical joints and have tee-head bolts conforming to ANSI/AWWA C-111/A21.11 and ANSI/AWWA C-153/A21.53, latest revision.

d. Existing Pipe Joint Restraint

(1) Split-restraint fittings for mechanical joints on existing pipe installations shall be manufactured in accordance with these technical specifications; however, split-restraint fittings shall be segmented to allow restraint of existing ductile iron mechanical joints meeting AWWA C111.

(2) Split-restraint fittings for existing pipe bell-and-spigot joints shall consist of split restraint rings, one installed on the pipe barrel behind the bell. Restraint devices shall be ductile iron per ASTM A536, latest revision, min. Grade 60-42-12. Threaded rods shall be high strength low-alloy steel per AWWA C111, latest revision.

e. Coatings

(1) Flange Adapters shall be provided with painted "shop coat", or approved equal.

(2) Retainer glands shall be provided with a bituminous coat.

(3) Existing pipe push-on joint restraint fittings shall be provided with a bituminous coat.

3. QUALITY CONTROL AND TESTING

a. Pipe restrained with mechanical restraint devices specified shall be capable of withstanding the following pressures:

Push-on and Mechanical Joint Pipe -	4" - 16"	min. 350 psi
	>16"	min. 250 psi
Flanged Joint Pipe -	4" - 36"	min. 250 psi

b. Burst pressure tests shall be performed as specified in ANSI/AWWA111/A21.11, latest revision.

c. When submitting for approval of restraint devices not listed in Section 4, include manufacturer drawings and brochures that clearly indicate size, dimensions, weights, performance standards, etc. If this documentation is omitted, the restraint fittings may be rejected at the sole option of the City.

d. Pipe restrained with retainer glands specified shall be capable of withstanding twice the rated pressure of the restraint device for five minutes with no leakage or movement.

4. MANUFACTURER

a. Ductile iron pipe push-on joint restraint devices shall be U.S. Pipe "Field-Lok” Gasket, American "Fast-Grip" Gasket, or approved equal.

b. Ductile iron pipe flange joint restraint devices shall be approved, equal to, or better than EBAA Iron “Megaflange Series 2100” or “1000 EZ Flange”, or Ford Meter Box Company “Uni-flange Series 400-C”.

c. Wedge action restraint for ductile iron pipe mechanical joints shall be equal to or better than EBAA Iron “Megalug, Series 1100”, Tyler/Union TUF Grip TLD, Sigma One-Lok Model SLD (4" to 36") or approved equal.

d. Split, wedge-action restraints devices for restraint of existing pipe and fitting joints shall be approved, equal to, or better than EBAA Iron “Megalug, Series 1100SD, or HD”, or approved equal.

DUCTILE IRON PIPE
(Push-On-, Mechanical-, Flexible-, and Manufactured Restrained Joint)

1. GENERAL

Ductile iron pipe shall be domestically manufactured in accordance with the latest revision of ANSI/AWWA C-151/A21.51. Pipe shall be furnished in 18 or 20 foot laying lengths. Pipe shall be lined with a standard thickness cement mortar lining and seal coated in accordance with the latest revision of ANSI/AWWA C-104/A21.4 and NSF 61. Pipe outside coating shall be an asphaltic coating in accordance with ANSI/AWWA C-151/A21.51, latest revision. All pipe materials used in potable water systems shall comply with NSF Standard 61. Unrestrained joint pipe shall be either the rubber-ring compression-type push-on joint or mechanical joint.

2. PRODUCTS

a. Push-on Joint Pipe

Push-on joint pipe shall be supplied with all joint accessories. Accessories shall include gaskets and lubricant in sufficient quantity for the proper assembly of each joint. Gaskets for push-on joints shall be made of ethylene propylene diene monomer (EPDM) rubber, except: Acrylonitrile butadiene (NBR) gaskets shall be used for potable water mains that are located in soil that is contaminated with low molecular-weight petroleum products or non-chlorinated organic solvents or non-aromatic organic solvents. Fluorocarbon (FKM) gaskets shall be used for potable water mains that are located in soil that is contaminated with aromatic hydrocarbons or chlorinated hydrocarbons. Fluorocarbon (FKM) gaskets shall be used for potable water mains if the soil is contaminated with aromatic hydrocarbons or chlorinated hydrocarbons, and is also contaminated with low molecular-weight petroleum products or organic solvents. All plain ends shall be painted with a circular stripe on the pipe barrel to allow a visual means of checking proper assembly.

- All push-on joints shall be in accordance with ANSI/AWWA C-111/A21.11, latest revision.

- Pressure Class shall be as follows:

Diameter	Min. Pressure Class
4” to 16"	350
> 16"	250

b. Mechanical Joint Pipe

- Mechanical joint pipe shall be supplied with all joint accessories. Accessories shall include lubricant, gaskets, ductile iron glands, bolts, and nuts, all in sufficient quantity for the assembly of each joint. The bolts and nuts shall be manufactured of high-strength, low-alloy steel such as "Corten", "Usalloy", or "Acipalloy". The follower gland shall be ductile iron. Gaskets for mechanical joints shall be made of ethylene propylene diene (EPDM) rubber.

- All mechanical joints shall be in accordance with ANSI/AWWA C-111/A21.11, latest revision.

- Pressure Class shall be as follows:

Diameter	Min. Pressure Class
4” - 16" →	350
> 16"	250

c. Flexible Joint Pipe

- Flexible-joint pipe shall be push-on, ball-and-socket, freely deflecting, and restrained using a corrosion resistant locking device. Thickness class shall be as follows:

Diameter	Min. Thickness Class
6”	54
8”	55
12”	56
16”	57

The joint shall be capable of a full 15° free deflection with no reduction in the waterway.

d. Manufactured Restrained Joint Pipe

- Joints shall be push-on in accordance with ANSI/AWWA C-111/A21.11. Joints shall be secured by wedged locking shims or a follower gland which shoulder against a retaining ring permanently fastened to the spigot end of the pipe within the joint. Gaskets for manufactured restrained pipe joints shall be made of EPDM rubber.

- Pressure Class shall be as follows:

Diameter		Min. Pressure Class
4’ - 16"	→	350
> 16"		250

3. QUALITY CONTROL AND TESTING

a. All pipe shall meet or exceed all hydrostatic, performance and acceptance tests as set forth in ANSI/AWWA C-151/A21.51, latest revision.

b. When submitting for approval of ductile iron pipe not listed in Section 4, include manufacturer drawings and brochures that clearly indicate size, dimensions, weights, pressure class or thickness class, performance standards, etc. If this documentation is omitted, the ductile iron pipe may be rejected at the sole option of the City.

4. MANUFACTURER

a. All ductile iron pipe, unless specified below, shall be by U.S Pipe, American Cast Iron Pipe Company, McWane Cast Iron Pipe Company, Griffin Pipe Products Company, or approved equal.

b. Flexible Joint pipe shall be American Ductile Iron “Flex-Lok Boltless Ball Joint Pipe", U.S. Pipe “USI FLEX Boltless Flexible Joint Pipe", Griffin Pipe Products “Snap-Lok River Crossing Pipe”, or approved equal.

c. Manufactured Restrained Joint pipe shall be American Ductile Iron “Flexring", U.S. Pipe “TR-

Flex", McWane Cast Iron Pipe Company “Super-Lock" (20” & 24” pipe) and “Thrust-Lock” (30” &36”), Griffin Pipe Products “Snap-Lok”, or approved equal.

d. All ductile iron pipe shall be domestically manufactured in the United States.

DUCTILE IRON PIPE- FLANGED

1. GENERAL

The flanged pipe shall be ductile iron domestically manufactured in accordance with ANSI/AWWA C-151/A21.51 and the National Association of Pipe Fabricators (NAPF) Product Standard 300, latest revisions, in nominal 18 or 20 foot laying length. The pipe shall be minimum Special Thickness Class 53 rated for a maximum working pressure of 250 psi, per ANSI/AWWA C-115/A21.15, latest revision.

2. PRODUCT

a. All flanges shall be ductile iron and shall be manufactured and installed on the ductile iron pipe in accordance with ANSI/AWWA Standard C-115/A21.15, and the National Association of Pipe Fabricators (NAPF) Product Standard 300-01, latest revisions. Bolt circle and bolt holes shall be drilled and faced to match American National Standards Institute (ANSI) B16.1, Class 125 Flanges. All necessary hex-head bolts and nuts, and full-faced gaskets for each joint size shall be furnished as a Flange Accessory Package. Bolts and nuts shall be high-strength, low-alloy steel such as "Corten", "Usalloy", or "AciPalloy". Gaskets shall be made from EPDM rubber.

b. Plain ends of flange ductile iron pipe shall be slightly beveled for use in a push-on joint assembly. A circular stripe painted on the pipe barrel shall be provided as a visual means of checking proper assembly when used in a push-on joint.

c. All pipe interiors shall be lined with standard thickness cement mortar in accordance with ANSI/AWWA C-104/A21.4 latest revision. All pipe exterior surfaces shall be coated as specified in ANSI/AWWA C-151/A21.51, latest revision.

3. QUALITY CONTROL AND TESTING

a. All tests as specified in ANSI/AWWA C-115/A21.15 latest revision are required.

b. Submit in duplicate notarized certificates of conformance that all tests and inspections have been performed in accordance with ANSI/AWWA C-115/A21.15, latest revision.

c. When submitting for approval of a ductile iron flange pipe not listed in Section 4, include manufacturer drawings and brochures that clearly indicate size, dimensions, weights, performance standards, etc. If this documentation is omitted, the ductile iron flange pipe may be rejected at the sole option of the City.

4. MANUFACTURER

All flanged ductile iron pipe shall be domestically manufactured by U.S. Pipe, American Cast Iron Pipe Company, McWane Cast Iron Pipe Company, or approved equal.

HDPE (High Density Polyethylene) PIPE

1. GENERAL

HDPE pipe shall be manufactured in accordance with the latest edition of AWWA C906. Pipe shall be furnished in 40-foot laying lengths.

2. PRODUCTS

a. Carrier: HDPE pipe shall be made of resin approved by the National Sanitation Foundation (NSF).

b. All HDPE pipe, sizes 4-inch and larger, shall meet the requirements of AWWA Standard C 906-99 (or most recent revision).

c. Pipe outside diameter shall be ductile iron pipe size.

d. All HDPE pipe shall meet the requirements of NSF Standard 61.

e. All HDPE pipe shall be made of materials conforming to polyethylene code designation PE 4710, with a minimum cell classification of PE 454474 C or higher.

f. Standard dimension ratio shall be DR-11

g. Pressure class shall be 160 psi.

h. The piping shall be permanently blue-coded to provide water main identification. When pipe is striped, stripes shall be blue, along the entire outside length of the pipe 90 or 120 degrees apart, and shall be made by co-extrusion or impregnation. Fully colored blue pipe co-extruded from permanently pigmented HDPE is also acceptable. Color shall be green for Wastewater applications.

i. Markings on the pipe shall include the following:

- Nominal size and OD base
- Standard material code designation
- Dimension
- Pressure class

- AWWA designation (AWWA C906-99)
- Material test category of pipe
- Manufacturer’s test code

3. QUALITY CONTROL AND TESTING

All pipe shall meet or exceed all hydrostatic performance and acceptance tests as set forth in AWWA C906, latest edition. Manufacturer shall furnish an affidavit that all materials delivered comply with standards set forth in these specifications.

4. MANUFACTURER

HDPE Pipe provided shall be better than or equal to CRS: “PolyPipe”, PE 4710, Quail Piping, PE 4710, Performance Pipe: “DriscoPlex 4000 Series”, PE-4710, 4” to 12” diameter or approved equal.

HDPE TUBING

1. GENERAL

a. All water service lines two (2) inches in diameter and smaller shall be constructed of high-density polyethylene (HDPE) tubing.

2. PRODUCT

a. Polyethylene extrusion compound from which the PE pipe and tubing are extruded shall comply with the applicable requirements for the Type III, color and U.V. code E, Class C, PE 4710, very high molecular weight polyethylene plastic material manufactured in accordance with AWWA C-901, latest revision, as specified in ASTM D1248. 2-inch and smaller HDPE pressure tubing shall have a color and ultraviolet code E and a minimum cell classification of PE 454474 E as specified in ASTM D3350.

b. The polyethylene extrusion compound shall be of virgin quality approved for potable water service by the National Sanitation Foundation. The polyethylene extrusion compound shall be manufactured with sufficient and proper ultra-violet color stabilizers.

c. Polyethylene tubing shall be SDR-9 200 psi.

d. The standard dimension ratio (SDR) shall be 9 for CTS tubing sizes. The average outside diameter, minimum wall thickness and respective tolerances for any cross-section shall be as specified in ASTM D2737. The average inside diameter, minimum wall thickness, and respective tolerances for any cross-section shall be as specified in ASTM D2239.

e. Polyethylene tubing shall be blue and have U.V. color stabilizers so that the pipe is not affected in color or flexibility for a minimum of four (4) years.

3. QUALITY CONTROL AND TESTING

a. Environmental stress cracking resistance testing shall be performed in accordance with ASTM D1693, Condition C, and shall have no failures after 5000 hours duration.

b. When submitting for approval of HDPE not listed in Section 4, include manufacturer drawings and brochures that clearly indicate size, dimensions, weights, performance standards, etc. If this documentation is omitted, the HDPE may be rejected at the sole option of the City.

4. MANUFACTURER

All HDPE tubing shall be manufactured by Performance Pipes "DriscoPlex", Endot EndoPure", Vanguard "Bruiser", Charter Plastics "Blue Ice" or approved equal.

PVC (Polyvinyl Chloride) WATER PIPE

1. GENERAL

All PVC pressure pipe shall be manufactured in accordance with AWWA Standard C-900, latest revision.

2. PRODUCT

a. Pipe - PVC pipe, 4" through 8", shall be DR-18 pressure class 235 with ductile iron pipe equivalent ODs. The pipe shall be approved by the National Sanitation Foundation for use as a potable water main. The pipe color shall be blue and the nominal laying length per pipe section shall be 20 ft.

b. Joints - Joints shall be "push-on" and shall be made by joining pipe spigot end and integral wall-thickened bell end. All joints shall meet all requirements of ASTM Standard D3139. Each bell shall be an integral-wall section joint assembly using elastomeric-gasket seals. All gaskets shall meet all requirements for performance as specified by ASTM F-477. All integral joint gaskets shall be made of EDPM rubber.

c. Restraints - Joint restraint provided shall be with mechanical systems designed for:

1) restraint of PVC pipe bell-and-spigots, such as the Uniflange 1350C, Uniflange 1390C, Megalug 1600, Sigma PV-Lok Series PVP, or approved equal.

2) restraint of PVC pipe spigot-end to mechanical joint of fittings or valves, such as the Megalug 2000PV, Tyler/Union TUF Grip TLP, Uniflange 1300C, Sigma One-Lok Models SLC or PVM, or approved equal.

Restraining devices shall meet or exceed all requirements of ASTM F1674 “Standard Test Method for Joint Restraint Products for Use with PVC Pipe”.

d. Service Taps- All service taps on PVC mains shall require a service saddle, manufactured specifically for PVC pipe, equal to or better than Ford FS- or FC-202, or JCM 406. The cutting tool shall be a shell type for PVC pipe (hole) cutter with internal teeth or double slots and be designed to accommodate AWWA C-900 pipe (twist drill bits and auger bits shall be prohibited). The saddles used should provide full support around the circumference of the pipe and provide a bearing area of sufficient width along the axis of the pipe (2” minimum), ensuring that the pipe will not be distorted when the saddle is tightened.

3. QUALITY CONTROL AND TESTING

All pipe shall meet or exceed all hydrostatic, performance and acceptance tests as set forth in AWWA C-900, latest revision.

Prior to shipment of the pipe to the project site, the Contractor shall submit to the Engineer, test reports and certifications as described below duly certified by the manufacturer's testing facility or an independent certified testing laboratory demonstrating full compliance with AWWA C-900. Certification from the supplier is not acceptable.

An original plus four (4) copies of the following shall be submitted to the Engineer:

1. Name, address, and phone number of the pipe manufacturer and the location of the plant at which they will be manufactured.

2. Notarized certificates of conformance that each lot of pipe has been manufactured, sampled, and tested per AWWA C-900. The City shall be provided in writing the means to cross-reference the markings with the certification and test reports (i.e. date of manufacturer, a lot number and shift number etc.) If this information is marked on the pipe in a code, the markings shall be decoded in writing.

4. MANUFACTURER

All un-restrained push-on joint C-900 PVC DR18 pipe shall be domestically manufactured and shall be equal to or better than Vasallo C-900, Diamond Plastics C-900, North American Pipe Corporation C-900, or JM C-900 PVC pipe; restrained joint PVC pipe shall be equal to or better than JM Eagle “Eagle Loc 900”, or CertainTeed Certa-Lok C900/C905 RJ PVC.

GATE AND TAPPING VALVES, RESILIENT SEAT

1. GENERAL

All gate valves shall conform to AWWA C-509 or AWWA C-515 and requirements contained herein.

2. PRODUCT

AWWA C-509 VALVES (Cast Iron or Ductile Iron) and AWWA C-515 (Ductile Iron)

a. General

1) Resilient Seat Gate Vales ("Valves") provided under this specification shall be suitable for installation on ductile iron or cast iron pipe, and C-900 PVC. Valves shall be manufactured in accordance with AWWA C-509 or AWWA C-515, latest editions, as applicable, and as specified herein.

2) “Standard valves” shall refer to resilient seat gate valves with mechanical joints at both ends meeting specifications stated herein.

3) “Tapping valves” shall refer to resilient seat gate valves with one end mechanical joint, and one end flanged, meeting specifications stated herein.

4) Resilient seats for valves shall be made of EPDM rubber.

5) Mechanical joint gaskets shall be made of EPDM rubber.

b. Standard and Tapping Valves

1) Valves shall be of the non-rising stem type that shall open by turning a two-inch square AWWA operating nut clockwise (open right).

2) Valve stems shall be stainless steel and manufactured in accordance with AWWA C-509/C-515. Stems, stem-nuts and wedges shall act independently. Stems shall be sealed by at least two O-ring seals, one located both above and below the thrust collar. Stems shall be provided with low friction torque reducing thrust bearings. Thrust washers may be used to separate the thrust collar from iron surfaces.

3) Valve bodies and gates shall be cast iron or ductile iron manufactured in accordance with ASTM A126 or ASTM A536 respectively, and AWWA C-509 or AWWA C-515 as applicable, latest revisions. All internal and external exposed ferrous surfaces of the valve body and gate shall have an epoxy coating applied to a minimum of eight mils, in accordance with AWWA C-

550 latest edition. Non-metallic resilient seats shall be bonded to the gate; mechanically attached seats will not be accepted. The method of bonding shall be approved by ASTM D429 A or B as specified in AWWA C-509/C-515. Hollow gates shall be provided with a drain in the bottom to flush the internal cavity of foreign material and stagnant water each time the valve is operated.

4) All bonnet bolts, gland bolts, nuts and other trim hardware exposed to the outside environment shall be stainless. Thrust collar tie-rod bolts shall be stainless steel.

5) Mechanical joints and accessories shall be manufactured in accordance with AWWA Standard C110 and C111, latest revision, with exceptions noted herein. Mechanical joint bolts-and-nuts shall be manufactured of high-strength, low-alloy steel such as "Corten", "USalloy", or "ACIPalloy". Joints requiring a shorter bolt than called for in AWWA Standard C111 shall be supplied as required. Mechanical joint gaskets shall be made of EPDM rubber.

c. Tapping Valves

1) Tapping valve interior waterway shall be a full-opening and capable of passing a full-sized shell cutter through the valve.Tapping valve shall be provided with a tapping-flange and flanged joint accessories. Tapping-flanges shall conform to dimensions and drillings of ANSI B16.1, Class 125, ANSI/AWWA C110/A21.10 latest edition, and NAPF 200.

2) Tapping-flange shall have a raised face or lip designed to engage a corresponding recess in a tapping sleeve as defined in MSS SP-60. Mechanical joint accessories shall be provided for mechanical joint end as stated above.

3) All tapping valves shall be interchangeable with multiple makes of tapping sleeves.

4) Mechanical joint gasket shall be made of EPDM rubber.

3. QUALITY CONTROL AND TESTING

a. Catalogs and maintenance data shall be provided as required by the Engineer. The catalogs and maintenance data shall contain sufficient detail to serve as a guide in the valve assembly, valve disassembly, the ordering of repair parts, complete valve lubrication and valve maintenance information.

b. Valves shall meet or exceed test specifications as set forth in AWWA C-509/C-515, latest editions, as applicable.

c. The Water Department may request samples of proposed valves. Samples shall be supplied and/or returned to the Contractor at the Contractor's expense.

d. Failure to submit samples within 10 calendar days after the date of a written request shall result in rejection of that item.

e. Bolt manufacturer’s certification of compliance shall be provided with each mechanical joint accessory package.

f. The resilient seat shall be bubble-tight against a 200-psi water working pressure and maintain zero leakage at all times.

4. MANUFACTURER

a. Standard valves shall be domestically assembled and shall be Clow F-6100, U. S. Pipe Metroseal 250, AVK Series 25, Mueller Co. (2360 for 2”-12”, 2361 for 14”-24”), American Flow Control Series 500 or Series 2500, Kennedy KenSeal 4571, or approved equal.

Tapping valves shall be domestically assembled and shall be equal to or better than Clow F-6114, U. S. Pipe Metroseal 250, Mueller Co. (2360 for 2”-12”, 2361 for 14”-24”), American Flow Control Series 500 or Series 2500, Kennedy KenSeal 7571, American AVK Series 25, or approved equal.

2” GATE VALVE, RESILIENT SEAT

1. GENERAL

Resilient Seat Gate Valves (Valves) provided, push-on or threaded joint shall be manufactured in accordance with AWWA C-509 latest edition and as specified herein. The valves described in these technical specifications are to be furnished including accessories.

2. PRODUCT

a. Valves shall be the non-rising stem type that shall open by turning a 2-inch square AWWA operating nut clockwise, open right.

b. The wedge shall be bronze manufactured in accordance with ASTM B62. It shall be fully encapsulated with rubber molded in place and bonded in accordance with ASTM D429. The wedge rubber coating shall be ethylene propylene diene (EPDM) rubber. Rubber mechanically attached with screws rivets and similar fasteners shall not be acceptable.

c. Stems shall be sealed by a minimum of two O-rings; stem seals shall be replaceable with the valve full open and while subjected to full rated pressure.

d. Low friction torque reduction thrust bearings shall be located both above and below the stem collar.

e. All bonnet bolts, gland bolts, nuts and other trim hardware exposed to the outside environment shall be stainless. Thrust collar tie-rod bolts shall be stainless steel.

f. The valve shall be coated inside and out by epoxy coating meeting AWWA C-550, latest edition.

g. Valve Ends:

1) Valve ends for push-on joint valves shall conform to AWWA C-111 latest edition and shall be suitable for use with iron pipe size plastic pipe as well as iron pipe.

2) Valve ends for threaded joint valves shall have female iron pipe connections compatible with N.P.T. threads as specified in AWWA C-800.

3. QUALITY CONTROL AND TESTING

a. Valves shall meet or exceed all testing requirements set forth in AWWA C-509, latest edition.

b. Certified shop drawings showing the valves to be in conformance with these technical specifications and referenced standards shall be required at the City's request. Failure to submit shop drawings upon request shall result in rejection of the valve.

4. MANUFACTURER

All valves shall be domestically assembled and shall be equal to or better than the following:

a. Push-on end valves - Clow 6110 (for PVC) / 6100 (for MJ), Waterous Series 500 - P.O.

b. Threaded end valves - Clow 6103, Waterous Series 500 – Threaded

c. American Flow Control, or AVK.

GATE VALVE w/HANDWHEELS (OS&Y) - RESILIENT SEAT
(4-inch and Larger)

1. GENERAL

a. Outside stem & yoke (OS&Y) Resilient Seat Gate Valves ("Valves") provided under this specification shall be suitable for installation on ductile iron or cast iron pipe. Valves shall be manufactured in accordance with AWWA C509 (or C515), latest editions, or as specified herein.

b. Valves shall have flange joints at both ends drilled in accordance with the American National Standard B16.1 for Class 125 cast iron pipe flanges.

c. Valves shall be operated by a handwheel, with an indicating arrow cast on the rim of the

handwheel noting the opening direction.

d. Valves shall open by turning the handwheel clockwise (open right).

e. Resilient seats shall be made of EPDM rubber.

2. PRODUCT

a. Valve stems shall be stainless steel and manufactured in accordance with AWWA C509 (or C515). Stems, stem nuts and wedges shall act independently. Stems shall be sealed by at least two O-ring seals, one located both above and below the thrust collar. Stems shall be provided with low friction torque reducing thrust bearings. Thrust washers may be used to separate the thrust collar from iron surfaces.

b. Valve bodies and gates shall be cast iron or ductile iron manufactured in accordance with ASTM A126 or ASTM A536 respectively, and AWWA C509 (or C515), latest revisions. All internal and external exposed ferrous surfaces of the valve body and gate shall have an epoxy coating applied to a minimum of eight mils, in accordance with AWWA C550 latest edition. Non-metallic resilient seats shall be bonded to the gate, mechanically attached seats will not be accepted. The method of bonding shall be approved by ASTM D429 A or B as specified in AWWA C509. Hollow gates shall be provided with a drain in the bottom to flush the internal cavity of foreign material and stagnant water each time the valve is operated.

c. Hex-head cover and flange accessory bolts and nuts shall be stainless steel.

3. QUALITY CONTROL AND TESTING

a. The Contractor shall provide two sets of catalogs and maintenance data. The catalogs and maintenance data shall contain sufficient detail to serve as a guide in the valve assembly, valve disassembly, the ordering of repair parts, complete valve lubrication and valve maintenance information.

b. Valves shall meet or exceed test specifications as set forth in AWWA C509 (or C515), latest revisions.

c. The Engineer may request samples of each valve offered. Samples shall be supplied and returned by the Contractor at the Contractor’s expense. Failure to submit samples within 10 calendar days after the date of a written request shall in the disqualification of that item.

d. The resilient seat shall be bubble-tight against a 200-psi water working pressure and maintain zero leakage at all times.

4. MANUFACTURER

Valves shall be domestically assembled and shall be equal to or better than Clow F-6136 OS&Y, U.S. Pipe Metroseal 250, or American Flow Control Series 2500-1.

BUTTERFLY VALVES (16” and LARGER)
(Rubber Seated, Mechanical Joint)

1. GENERAL

All Rubber-Seated Butterfly Valves ("Valves") provided shall be manufactured in accordance with AWWA C504, latest edition or as specified herein.

2. PRODUCT

a. Valves provided shall have a minimum rating of Class 150B. Valve bodies shall be manufactured in accordance with AWWA C504. The mechanical joint of the valves shall be in accordance with ANSI/AWWA C-111/A21.11, latest revision, except as noted herein.

b. The valve seat shall be located on the valve body or disc and shall provide drip-tight shutoff for pressure differential of 150 psig versus 0 psig in either direction. The seat shall be made of EPDM. For valve seats mounted on the disc, the valve seat shall be vulcanized to a stainless steel seat ring that shall be mechanically attached to the disc with stainless steel bolts. For valve seats mounted on the body, the valve seat shall be bonded to the body and shall meet test procedures as outlined in ASTM D-429 Method A or B. Valve seat mating surfaces shall be 316 Stainless Steel.

c. The valve shaft shall be a one-piece unit extending completely through the valve disc or may be stub shaft construction for valves 18 inches and above. Shaft materials shall conform to AWWA Standard C-504, Section 3.3, latest revision. Valve shaft shall be 316 Stainless Steel minimum.

d. The valve disc shall have no external ribs transverse to the flow and shall be constructed of material as specified in AWWA C-504, Section 3.4, latest revision.

e. Shaft seals shall be standard "O" ring or "V" packing seals, and all seals shall be replaceable without disassembly of the valve.

f. The operator shall be manual type opening to the right (clockwise). The operator shall be traveling-nut type. All operators shall be totally enclosed, sealed, gasketed, and lubricated as specified in AWWA C-504, Section 3.8. The operator shall also be able to apply output torque required to operate the valve under adverse conditions without exceeding input torque as allowed under AWWA Standard C-504. It shall also be capable of withstanding overload input torque of 450 ft. lbs. against the disc stop. Disc stops shall be not in the waterway.

g. Valve body interior and disc shall have an epoxy protective coating meeting AWWA Standard C-550.

h. Mechanical joint valves provided shall be designed for buried service.

i. Mechanical joints shall be in accordance with AWWA Standard C-111, latest revision, with exceptions noted herein. Mechanical joint gaskets provided shall be made of EPDM rubber. The bolts and nuts shall be domestically manufactured of high strength, low alloy steel such as Cor-Ten, Usalloy, ACIPalloy or approved equal.

j. Mechanical joint valves shall be provided with 2-inch square operating nuts in conformance with AWWA C-500.

3. QUALITY CONTROL AND TESTING

a. Flow Characteristics - The maximum non-shock shutoff pressure shall be 150 psi.

b. Certification - The manufacturer shall provide the Tampa Water Department with an affidavit certifying that all valves supplied have been manufactured and tested in accordance with all of the aforementioned standards.

c. When submitting for approval of rubber-seated butterfly valves (flanged and mechanical joint) not listed in Section 4, include manufacturer drawings and brochures that clearly indicate size, dimensions, weights, performance standards, etc. If this documentation is omitted, the rubber-seated butterfly valves may be rejected at the sole option of the City. Shop drawings shall be submitted upon request. The Contractor shall also furnish catalog and maintenance data in sufficient detail to serve as a guide in the assembly and disassembly of the Butterfly Valves, the ordering of repair parts, and complete lubrication and maintenance information.

4. MANUFACTURER

Valves shall be domestically assembled and shall be equal to or better than Valmatic (Series 2100 or 2000), Mueller Lineseal III, or approved equal.

INSERTION VALVES (4” to 24”)

1. GENERAL

Insertion valves shall be installed in live cast iron, ductile iron, C-900 PVC, and asbestos cement pipelines without the requiring shut down of water flow through the pipe. The design should allow the valve to be installed into an existing pressurized pipeline while maintaining constant pressure and service as usual. The insertion valves provided shall be true resilient seat gate valves that will

remain in the water distribution piping system. Insertion valves must safely operate in balanced and unbalanced pressure situations.

2. PRODUCT

a. Insertion valve shall be capable of pressure-tight assembly to the exterior of the pipe in which flow is to be stopped at a working pressure not to exceed 250 psi.

b. Resilient Seat Gate Valve shall:

1) have a 2” standard (square) operating nut NRS (non-rising stem)

2) open and close through AWWA standard turns per inch

3) open right

4) meet or exceed ANSI\AWWA C-515 or C-509 Standards

5) have a body of two-piece ductile iron casting manufactured to specifications of ASTM A536 65-45-12 with minimum 8-mil epoxy E coating inside and out that meets or exceeds ANSI\AWWA C-550 Standards, and is certified to ANSI\NSF 61

6) have a valve body that provides full mechanical protection of the pipe, and that is permanently restrained to the pipe

7) have a ductile iron wedge, encapsulated with EPDM rubber

8) have a triple O-ring seal stuffing box (2 upper and 1 lower O-rings)

9) stainless steel fasteners, and valve stem (min. 304SS)

10) operate at 250 psi maximum working pressure

c. All gaskets and o-rings to remain with the valve upon completion shall be EPDM rubber.

d. A ¾” NPT test plug shall be provided on the outlet throat of the sleeve for pressure testing the sealed sleeve at 150 psi prior to cutting the pipe.

e. The tapping cutter shall extract the coupon from the cut pipeline.

f. Restraint devices connecting the valve body castings to the pipe shall be split EBAA Mega-lug, or approved equal, with a working pressure rating of 350 psi for 4-12 inch, and 250 psi for pipe larger than 12-inch. Gland body, wedges, and wedge-actuating components shall be

cast from grade 65-45-12 ductile iron material in accordance with ASTM A536. Torque limiting twist off nuts shall be included to ensure proper actuating of the gripping wedges.

3. QUALITY CONTROL

a. Valves shall meet or exceed test specifications as set forth in AWWA C-509 (or AWWA C-515) these specifications herein, latest editions, as applicable.

b. The resilient seat shall be bubble-tight against a 250-psi water working pressure and maintain zero leakage at all times.

4. MANUFACTURER

Insertion valves shall be domestically assembled equivalent to Advanced Valve Technologies EZ Valve II, TEAM Resilient Wedge InsertValve, or approved equal.

VALVE BOXES
(Class 35 Grey Iron)

1. GENERAL

Valve boxes provided under this specification shall be designed to provide access to an underground valve 2-inch operating nut at a depth of 2-feet or greater. Valve boxes shall be suitable for installation in areas subject to heavy vehicle traffic loading.

2. PRODUCT

Valve boxes shall include removable valve box cover with "WATER" label as shown on the Standard Dimension detail titled "Valve Box". All valve boxes shall be manufactured of Class 35 grey iron. All valve boxes shall consist of four parts: valve box covers, risers, top sections, and bottom sections. All valve boxes shall be the same dimension, within manufacturing tolerances, as shown in Standard Dimension Detail "Valve Box".

3. QUALITY CONTROL AND TESTING

When submitting for approval of valve boxes not listed in Section 4, include manufacturer drawings and brochures that clearly indicate size, dimensions, weights, performance standards, etc. If this documentation is omitted, the valve boxes may be rejected at the sole option of the City.

4. MANUFACTURER

Valve box manufacturers shall have a domestic presence. Valve boxes shall be equal to or better than those made by Union Foundry, Sunshine Foundry, or Pipeline Components, Inc.

COMPACT ANCHOR FITTINGS - DUCTILE IRON

1.0 GENERAL

Ductile Iron Compact Anchor Fittings ("Fittings") provided under this specification shall be manufactured in accordance with AWWA Standard C-153 and C-111, latest editions, and as specified herein. Joint accessories shall be provided with fittings.

2.0 PRODUCT

a. Tees

(1) Both joints on the run of all anchor tees shall be mechanical joint in accordance with AWWA Standard C-111, latest edition.

(2) All mechanical joints shall be supplied with a joint accessories package (bolts, nuts and gasket) as part of the anchor fitting. MJ Gaskets shall be made of EPDM rubber formulated to resist chloramine degradation. All anchor fittings shall be compatible with mechanical joint connections in accordance with AWWA C-111, latest edition, and shall be capable of mechanical restraint so as to eliminate the need for additional thrust restraints.

(3) The standard anchor tee branch shall have an anchoring "plain end" which includes an integral or split follower gland, suitable for connecting to mechanical joint fitting meeting ANSI/AWWA C-111/A 21.11.

b. Anchor Elbow and Anchor Coupling

The Anchor x Anchor elbows and anchor couplings shall have for both ends anchoring "plain ends". These "plain ends" shall have integral or split follower glands, suitable for mechanical joint fittings meeting ANSI/AWWA C-111/A 21.11.

c. Joint Accessories

(1) All T-head bolts and nuts for joints shall be domestically manufactured high-strength, low-alloy steel such as "Corten", "Usalloy," or "ACIPalloy."

(2) All joint accessories shall be furnished with anchoring fittings.

(3) All gaskets shall be EPDM rubber.

d. All anchoring fittings shall be furnished with either: i) a standard thickness cement mortar lining seal coated in accordance with AWWA Standard C-104, latest edition, and an exterior, asphalt coating which conforms to ANSI/AWWA C-151/A21.51; or, ii) have factory-applied fusion bonded epoxy coatings both inside and outside, in accordance with AWWA C550.

e. All fittings shall have a minimum pressure rating of 350 psi.

3.0 QUALITY CONTROL AND TESTING

a. All anchor fittings shall meet or exceed acceptance, performance and hydrostatic testing in accordance with AWWA Standard C-153 and C-111, latest editions.

b. When submitting for approval of ductile iron compact anchor fittings not listed in Section 4, include manufacturer drawings and brochures that clearly indicate size, dimensions, weights, performance standards, etc. If this documentation is omitted, the ductile iron compact anchor fittings may be rejected at the sole option of the City.

4.0 MANUFACTURER

Ductile iron compact anchor fittings shall be manufactured by U.S. Pipe and Foundry Company, Clow, American Ductile Iron Pipe, McWane, Pipeline Components, Inc. or approved equal.

COMPACT MECHANICAL JOINT FITTINGS-DUCTILE IRON

1. GENERAL

a. Ductile iron compact mechanical joint fittings shall be manufactured in accordance with ANSI/AWWA C-153/A21.53, latest revisions and the specifications stated herein. Fittings shall be listed by the National Sanitation Foundation (NSF) and shall conform to the requirements of NSF-61.

b. Whenever the word "fitting" is used in this specification, it shall mean "Compact Ductile Iron Mechanical Joint Fitting".

2. PRODUCT

a. For fittings larger than 16-inches physical and chemical properties shall be in accordance with ANSI/AWWA C153/A21.53, latest revision. The minimum working pressure for fittings shall be 350. The minimum wall thickness shall not be less than that of pressure class 350 ductile iron pipe.

b. Joints shall be Mechanical Joint in accordance with ANSI/AWWA C111/A21.11 and C153/A21.53, latest revision, with exceptions noted herein. Mechanical Joint bolts and nuts shall be domestically manufactured of high-strength, low-alloy steel such as "Corten", "Usalloy", or "ACIPalloy". Joints requiring a shorter bolt than called for in ANSI/AWWA C111/A21.11 shall be supplied as required. Gaskets for mechanical joints shall be made of ethylene propylene diene (EPDM) rubber.

c. Exterior Coating and Interior Lining

Mechanical Joint fittings furnished shall have either of the exterior coating and interior lining systems described below:

(1) Cement Mortar Lining: Fittings furnished shall have a standard thickness cement mortar lining and be seal coated in accordance with ANSI/AWWA C-104/A21.4, latest revision. Fittings shall be listed by an approved certifying agency as conforming to all requirements of ANSI/NSF 61 and shall have an asphalt exterior coating which conforms to ANSI/AWWA C-153/A21.53.

(2) Fusion-bonded Epoxy: Fittings shall be coated inside and out with fusion-bonded epoxy, and be in conformance with the requirements of ANSI/AWWA C-116/A21.16 and AWWA C-550, latest revisions. Fittings shall be listed by NSF or by an approved certifying agency as conforming to all requirements of ANSI/NSF 61.

3. QUALITY CONTROL AND TESTING

a. All fittings specified herein shall meet or exceed all hydrostatic, performance, and acceptance tests in accordance with ANSI/AWWA C153/A21.53 latest revision.

b. When submitting for approval ductile iron compact MJ fittings not listed in Section 4, include manufacturer drawings and brochures that clearly indicate size, dimensions, weights, performance standards, etc. If this documentation is omitted, the ductile iron compact MJ fittings may be rejected at the sole option of the City.

4. MANUFACTURER

All manufacturers of ductile iron compact MJ fittings specified herein shall have a domestic presence. The fittings shall be manufactured by U.S. Pipe, Clow, Tyler/Union Pipe, American Ductile Iron Pipe, McWane, Pipeline Components, Inc., Sigma, Star Pipe, or approved equal.

FLANGED FITTINGS (Standard Class 125

1. GENERAL

All standard class 125 flanged fittings shall be manufactured in accordance with ANSI/AWWA Standard C-110/A21.10 and NAPF 200, latest revision.

2. PRODUCT

a. Standard class 125 flanged fittings shall have a minimum pressure rating of 250 psi. Flanges shall be round type, faced and drilled and shall conform to ANSI B16.1 for cast-iron or bronze pipe flange Class 125.

b. The joints shall be flanged in accordance with ANSI/AWWA C-110/A21.10 and NAPF 200, latest revision. All necessary hex-head bolts and nuts, and full-faced gaskets for each joint shall be furnished as a Flange Accessory Package and shall conform to ANSI B18.2.2; threads shall be manufactured in accordance with ANSI B1.1. Bolts and nuts shall be high-strength, low-alloy steel such as "Corten", "Usalloy", or "ACIPalloy". Bolt circle and bolt holes shall be drilled and faced to match American National Standard Institute (ANSI) B16.1, Class 125 Flanges.

c. All standard class 125 flanged fittings shall have a standard thickness cement mortar lining and shall be seal coated in accordance with AWWA Standard C-104, latest revision.

3. QUALITY CONTROL AND TESTING

a. All standard class 125 flanged fittings shall meet or exceed all test standards set forth in AWWA C-110.

b. When submitting for approval of standard class 125 flanged fittings not listed in Section 4, include manufacturer drawings and brochures that clearly indicate size, dimensions, weights, performance standards, etc. If this documentation is omitted, the standard class 125 flanged fittings may be rejected at the sole option of the City.

4. MANUFACTURER

Standard class 125 flanged fittings shall be manufactured by U.S. Pipe and Foundry Co., American Ductile Iron Pipe, PCI, Tyler-Union, Sigma, or approved equal.

OFFSETS
(Ductile Iron, Mechanical Joint)

1. GENERAL

All ductile iron mechanical joint offsets shall be of ductile iron and manufactured in accordance with and ANSI/AWWA Standards C-110/A21.10 (or C-153/A21.53) and C-111/A21.11, latest revisions.

2. PRODUCT

a. Ductile iron mechanical joint offsets shall have a minimum pressure rating of 350 psi.

b. Joints shall be mechanical joints in accordance with C-111/A21.11, latest revision. All joint accessories shall be furnished with the fittings. Mechanical joint bolts and nuts shall be domestically manufactured of high-strength, low-alloy steel such as "Corten", "Usalloy", or "ACIPalloy". The follower gland shall be manufactured from ductile iron. The gasket shall be made of EPDM rubber.

c. Mechanical Joint fittings furnished shall have either of the exterior coating and interior lining systems described below:

(1) Cement Mortar Lining: Fittings furnished shall have a standard thickness cement mortar lining and be seal coated in accordance with ANSI/AWWA C-104/A21.4, latest revision. Fittings shall be listed NSF or by an approved certifying agency as conforming to all requirements of ANSI/NSF 61 and shall have an asphalt exterior coating which conforms to ANSI/AWWA C-110/A21.53.

(2) Fusion-bonded epoxy: Fittings shall be coated inside and out with a minimum 8 mils of fusion-bonded epoxy, and be in conformance with the requirements of ANSI/AWWA C-116/A21.16 and AWWA C-550, latest revisions. Fittings shall be listed by an approved certifying agency as conforming to all requirements of ANSI/NSF 61.

3. QUALITY CONTROL AND TESTING

a. Ductile iron mechanical joint offsets shall meet or exceed pressure, hydrostatic and all other tests set forth in ANSI/AWWA C-110/A21.10 (or C-153/A21.53), latest revision.

b. Submit in duplicate notarized certificates of conformance that all tests and inspections performed on ductile iron mechanical joint offsets as required by the ANSI/AWWA standards C-110/A21.10 (or C153/A21.53) have been satisfied.

c. When submitting for approval of ductile iron mechanical joint offsets not listed in Section 4, include manufacturer drawings and brochures that clearly indicate size, dimensions, weights, performance standards, etc. If this documentation is omitted, the ductile iron mechanical joint offsets may be rejected at the sole option of the City.

4. MANUFACTURER

Ductile iron mechanical joint offsets shall be manufactured by U.S. Pipe and Foundry Co., American Ductile Iron Pipe, Sigma, Tyler-Union, Union Foundry, or approved equal.

MECHANICAL JOINT BOLTS-AND-NUTS

1. GENERAL

All mechanical joint bolts and nuts shall be manufactured in accordance with ANSI/AWWA C-111/A21.11, latest revision, and shall also adhere to the following specification.

2. PRODUCT

a. All mechanical joint bolts shall be a Tee-head design with hexagonal nuts. Dimensions shall

be in accordance with ANSI/AWWA C-111/A21.11.

b. All bolts and nuts shall be manufactured of high-strength, low alloy steel in conformance with ANSI/AWWA C-111/A21.11 and ASTM A242, latest revisions.

c. All bolts shall be designed for internal and external threads to conform to ANSI/ASME B1.1 and B1.2. Thread form shall conform to the standards and dimensions of the coarse-thread series Unified Coarse (UNC); external threads shall be made in compliance with Class 2A limits, and internal threads shall be made in compliance with Class 2B limits. The Contractor is advised that various HDPE MJ adapters may require longer than standard bolts to complete the installation.

3. QUALITY CONTROL AND TESTING

When submitting for approval of mechanical joint bolts and nuts not listed in Section 4, include manufacturer drawings and brochures that clearly indicate size, dimensions, weights, performance standards, etc. If this documentation is omitted, the mechanical joint bolts and nuts may be rejected at the sole option of the City.

4. MANUFACTURER

Mechanical joint bolts and nuts specified herein shall be domestically manufactured of Cor-Ten or approved equal by Birmingham Foundry, National Set Screw Corporation or approved equal.

SOLID SLEEVES
(Ductile Iron, Compact, MJ)

1. GENERAL

Solid sleeves shall be used to join two plain ends of pipe or repair a damaged pipe.

2. PRODUCT

a. Solid sleeve lengths shall be up to 24-inches. The solid sleeve shall be capable of having two plain ends of pipe inserted into opposite ends of the sleeve. The sleeve is then to be sealed to the pipe by a mechanical joint at each end of the sleeve.

b. All sleeves shall be manufactured of ductile iron. Solid sleeves shall be manufactured in accordance with ANSI/AWWA Standard C-153/A21.53, latest revision. All sleeves shall be rated for a minimum working pressure of 350 psi.

c. All solid sleeve sealing ends shall be mechanical joints in accordance with ANSI/AWWA C-111/A21.11, latest revision. All joint accessories shall be furnished with the fittings. All bolts and nuts shall be made of high-strength, low-alloy steel such as "Corten", "Usalloy", or

"Acipalloy". The gasket shall be for a standard Mechanical Joint, in accordance with ANSI/AWWA C-111/A21.11, latest revisions, and be made of EPDM rubber. The follower gland shall be manufactured from ductile iron at least ASTM A536, Grade 70-50-05 in accordance with ANSI/AWWA C-111/ A21.11, latest revision

d. All ductile iron compact solid sleeves shall be furnished with a standard thickness cement mortar lining and seal coating in accordance with AWWA Standard C-104, latest revision.

e. Fittings shall have an exterior, asphaltic coating which conforms to ANSI/AWWA C-153/A21.53.

3. QUALITY CONTROL AND TESTING

a. All solid sleeves shall meet or exceed all testing requirements of ANSI/AWWA C-153/A21.53.

b. When submitting for approval of solid sleeves not listed in Section 4, include manufacturer drawings and brochures that clearly indicate size, dimensions, weights, performance standards, etc. If this documentation is omitted, the solid sleeves may be rejected at the sole option of the City.

4. MANUFACTURER

a. All ductile iron mechanical joint solid sleeves shall be manufactured by U.S Pipe, Sigma, Tyler/Union, American Cast Iron Company, Clow, or approved equal.

DRY-BARREL FIRE HYDRANTS

1. GENERAL

All non-rising stem dry-barrel hydrants shall be manufactured in accordance with AWWA C-502, latest revision and these specifications.

2. PRODUCT

a. Hydrants shall have a 5¼-inch main valve opening. The main valve shall be of compression-design and shall open against and closing with pressure. The hydrant shall comply with the requirements of Associates Factory Mutual Insurance Companies and have the "FM" symbol cast into the barrel. The hydrant shall be listed with Underwriter's Laboratories. Hydrants shall open by turning the operating nut counterclockwise.

b. The hydrant shall be provided with a breakable traffic feature designed so that the nozzle section of the hydrant can be rotated a full 360 degrees. Break couplings shall be made of cast iron, epoxy coated steel, or forged stainless steel. The lower barrel and shoe shall be made of ductile iron, manufactured in accordance with AWWA C-502, latest revision.

c. All hydrants shall have two 2½-inch bronze nozzles, 180 degrees apart, and one 4½-inch bronze nozzle. All nozzle centerlines shall be at the same elevation. Nozzle outlet threads to be National Standard fire hose coupling screw thread, as described in Appendix A of AWWA C-502. After being coated with an approved anti-seize compound as specified herein, hydrant nozzle shall thread or twist-lock into the hydrant nozzle section; a locking device secures the nozzle. Cast iron or ductile iron nozzle caps provided, with gaskets; nozzle cap nut configuration matches hydrant operating nut. Chains are not provided on nozzle caps.

d. Hydrant design shall be such that removal of the seat valve drain mechanism, internal rod and all working parts can be accomplished through the top of the hydrant without disturbing the ground-line joint or nozzle section. The shoe inlet shall be mechanical joint, in accordance with AWWA C-111, latest revision. The interior of the shoe and (and upper and lower valves plates, if utilized in design) shall be epoxy-coated in accordance with AWWA C550, latest revision. Accessory kits shall be provided with MJ bolts and nuts and gasket. Mechanical joint nuts and bolts to be manufactured of high-strength, low-alloy steel equal to or better than "Cor-Ten". Main valve gasket and mechanical joint (MJ) gasket made of EPDM.

e. All above-ground external bolts, studs, and nuts made of low-zinc bronze or stainless steel. Below-ground bolts, studs and nuts shall be made of high-strength, low-alloy steel as specified herein, or of stainless steel. When bolts are used at the break coupling, they shall not be frangible.

f. Unless the operating rod is made of stainless steel, the rod shall be sheathed where it passes through a double o-ring seal, sealing the operating threads from the water in the hydrant at all times when the valve is in the open or closed position. Another o-ring shall prevent water from passing between the operating shaft and the sheath. Downward travel of the operating rod and valve assembly shall be controlled by a travel stop device (located in the bonnet only), to prevent the bottom of the main valve from making contact with the epoxy coating of the shoe. Travel stop devices located on the bottom of the operating rod are not acceptable. Bronze operating nuts shall be fully covered with a cast iron or ductile iron weather shield and shall have at least one anti-friction thrust washer to reduce the operating torque when opening the hydrant. The hydrant’s bronze main valve seat ring shall thread into a bronze sub-seat or drain ring. The drain outlet for the hydrant shall be eliminated as part of the casting or machining process.

g. Hydrant operating threads shall be lubricated with anti-seize compound paste upon assembly. Approved anti-seize compounds are Bostik Never-Seez food-grade (888-603-8558), or Permatex part #82448 (food-grade anti-seize compound). (877-376-2839), or MobilGrease FM102 (food-grade). Approval for other anti-seize compounds shall be requested in writing to the Tampa Water Department, accompanied with a Material Safety Data Sheet from the manufacturer of the compound for review. Anti-seize compound shall not contain any heavy metals.

h. When the hydrant is tested for head-loss as described in AWWA C502, Section 5, latest revision, the maximum head–loss shall not exceed 2.5 psi when flowing at 1000 gpm through the 4 ½-inch nozzle,.

i. Hydrant coatings shall be as specified in AWWA C502 Section 4.02. Additionally, above-ground exterior hydrant coatings shall be minimum 4 mil Dry Film Thickness white primer coating, compatible with Porter high-grade enamel final paint to be applied in the field.

j. If manufacturer uses locking keys to secure the lower barrel to the shoe, all locking keys to be fully coated with a Water Department approved anti-seize compound applied upon assembly

3. QUALITY CONTROL AND TESTING

a. The following shall be provided upon request of the Engineer:

1. Certified affidavit from an officer of the manufacturer that hydrant conforms to AWWA C502, latest revision, and these specifications.

2. Certified test results from an independent testing laboratory indicating that the hydrant conforms to Section 2.8 of this specification.

3. Certification of Underwriter's Laboratories listing.

4. Certification of compliance with Associates Factory Mutual Fire Insurance Companies specifications.

5. Two sets of engineering performance data, model catalog, and repair parts manual and price lists. Such data shall contain but is not necessarily limited to: head-loss versus flow curves, hydrant parts and materials, hydrant dimensions. Catalog and maintenance data shall also be supplied in sufficient detail to serve as a guide in the assembly and taking-down of the fire hydrant, the ordering of repair parts, and complete lubrication and maintenance information.

6 Failure to submit any of the above certifications or information with the bid package may result in rejection of the bid.

7. The Water Department may request samples of each hydrant. Samples shall be supplied by and, if requested, returned to the bidder at the bidder's expense. Failure to submit samples within 15 working days after the date of a written request shall result in rejection of the bid.

4. MANUFACTURER

a. Hydrants shall be assembled and tested in their entirety within the United States of America or its territories. The manufacturer of hydrants shall have continuously manufactured, catalogued, sold, and had in service the hydrants in the size proposed for a minimum of five

years.

b. Hydrants shall be manufactured by American (Darling B-84-B 5¼), U.S. Pipe (Metro 250 M94, 5 ¼), Kennedy (Guardian K81-D, 5¼), American AVK (Series 2780, Nostalgic, 5¼), or approved equal.

ELECTROFUSION CORPORATION SADDLES

1. GENERAL

Electrofused corporation saddles shall be used for tapping HDPE water distribution pipe and tubing to provide water meter service lines, air release points and temporary connections for water quality sampling points. They will consist of a single unit made of one (1) injection molded fitting base and one (1) female threaded outlet ring.

2. PRODUCTS

a. The base section for each corporation shall be sized to fit 4” to 12" HDPE pipe or 2" HDPE tubing. The threaded outlet ring for each corporation shall be sized with tapered CC threads to fit a 3/4", 1", 1-1/2" or 2" brass corporations.

b. The electrofusion corporation saddle shall be an injection molded fitting base designed and manufactured in accordance with ASTM F-1055. Resin used to produce the electrofused tee shall be pre-blended virgin resin with a cell classification of 445474C and a PPI listing of PE4710. The resin will comply with ASTM D 3350 and meet or exceed the requirements of NSF 61.

c. The electrofusion corporation saddle shall incorporate as part of its design a brass 360 alloy threaded outlet that is restrained with a stainless steel 304 compression ring. It will also incorporate a constant 40 volt fusion coil for the purpose of joining the fitting onto the outer pipe wall.

d. Installation of the electrofusion corporation saddle shall utilize a metal, reusable under clamp for main sizes 2" through 6" to hold the fitting in place until the electrofusion process is complete. Installation of the electrofusion corporation saddle shall utilize a top loading fitting clamp for 8" main sizes to hold the fitting in place until the electrofusion process is complete.

e. The electrofusion corporation saddle shall be of no-leak design and shall be designed for use on DIP-sized pipe.

3. QUALITY CONTROL AND TESTING

When submitting for approval of an electrofusion corporation saddle not listed in Section 4, the Contractor shall include drawings and brochures that clearly indicate size, dimensions, weights,

performance standards, etc. If this documentation is omitted, the electrofusion corporation saddle may be rejected at the sole option of the City.

4. MANUFACTURER

All electrofusion corporation saddles shall be manufactured by Central Plastics Company of Shawnee, Oklahoma or approved equal.

ELECTROFUSION TAPPING TEES

1. GENERAL

Electrofused tapping tees shall be used for tapping water HDPE distribution pipe, tubing to provide a connection for customer’s water meters, air release valve connections and temporary water quality sampling points. They shall consist of a single unit made of one (1) electrofusion self tapping tee and one (1) electrofusion coupling.

2. PRODUCTS

a. The base section for each coupling shall be sized to fit 4” to 14" HDPE pipe or 2" HDPE tubing. The branch section for each coupling shall be sized to 1" or 2" CTS HDPE tubing.

b. The electrofusion self tapping tee shall be an injection molded fitting designed and manufactured in accordance with ASTM F-1055 and shall meet all provisions of AWWA C906, latest revision. Resin used to product the electrofused tee shall be pre-blended, virgin resin with a cell classification of 445474C and a PPI listing of PE4710. The resin shall comply with ASTM D 3350 and meet or exceed the requirements of NSF 61.

c. The electrofusion self tapping tee shall incorporate as part of its design a self contained brass cutter that will retain the pipe coupon after tapping the pipe. It shall also incorporate a constant 40 volt fusion coil for the purpose of joining the fitting onto the outer pipe wall.

d. Installation of the self tapping tee shall utilize a metal, reusable under clamp to hold the fitting in place until the electrofusion process is complete.

e. The tapping tee shall be of no-leak design.

3. QUALITY CONTROL AND TESTING

When submitting for approval of a tapping tee not listed in Section 4, the Contract shall include drawings and brochures that clearly indicate size, dimensions, weights performance standards, etc. If this documentation is omitted, the tapping tee may be rejected at the sole option of the City.

4. MANUFACTURER

All electrofusion tapping tees shall be manufactured by Central Plastics Company of Shawnee, Oklahoma or approved equal.

ELECTROFUSION SOLID COUPLINGS

1. GENERAL

Electrofusion solid couplings shall be used for joining similarly sized sections of HDPE pipe to one another. They will consist of one (1) electrofusion solid coupling.

2. PRODUCTS

a. The coupling shall be sized to fit 4" to 14" HDPE pipe or 1" or 2" CTS HDPE tubing.

b. The electrofusion coupling shall be an injection molded fitting designed and manufactured in accordance with ASTM F-1055 and shall meet all provisions of AWWA C906, latest revision. Resin used to produce the coupling shall be virgin, pre-blended resin with a cell classification of 445474C and a PPI listing of PE4710. The resin will comply with ASTM D 3350 and meet or exceed the requirements of NSF 61.

c. The electrofusion coupling shall incorporate as part of its design a constant 40 volt fusion coil for the purpose of joining the fitting onto the outer pipe wall.

d. Installation of the coupling shall utilize a reusable restraining device to hold the coupling in place during the fusion process

e. The electrofusion couplings shall be of no-leak design.

3. QUALITY CONTROL AND TESTING

When submitting for approval of electrofusion solid couplings not listed in Section 4, the Contractor shall include drawings and brochures that clearly indicate size, dimensions, weights, performance standards, etc. If this documentation is omitted, the tapping tee may be rejected at the sole option of the City.

4. MANUFACTURER

All electrofusion couplings shall be manufactured by Central Plastics Company of Shawnee, Oklahoma or approved equal.

HDPE-MECHANICAL JOINT ADAPTERS

1. GENERAL

HDPE mechanical joint (MJ) adapters shall be used for joining HDPE pipe to ductile iron or cast iron MJ fittings, valves or PVC or ductile iron pipe. They shall consist of an HDPE spool piece with a raised or flange type area.

2. PRODUCTS

a. The HDPE-MJ adapter shall be sized to fit 4” to 14" HDPE pipe on one end and a DIP or CIP MJ fitting on the other.

b. The HDPE-MJ adapter shall be an injection molded fitting designed and manufactured in accordance with ASTM F-1055 and shall meet all provisions of AWWA C906, latest revision. Resin used to produce the HDPE-MJ adapter shall be pre-blended with a minimum cell classification of 445474C and a PPI listing of PE4710. The resin shall comply with ASTM D 3350 and meet or exceed the requirements of NSF 61.

c. The HDPE-MJ adapter shall have the capability to be attached to HDPE pipe by butt fusion or by the use of an electrofusion coupling.

d. The HDPE-MJ adapter shall be of a no leak design. No additional restraint shall be required when used in conjunction with a mechanical joint fitting and accessories.

e. The Contractor is advised that HDPE-MJ adapters may require longer bolts than normally accompany an MJ gland kit.

3. QUALITY CONTROL AND TESTING

When submitting for approval of HDPE-MJ adapters not listed in Section 4, the Contractor shall include drawings and brochures that clearly indicate size, dimensions, weights, performance standards, etc. If this documentation is omitted, the adapter may be rejected at the sole option of the City.

4. MANUFACTURER

All electrofusion HDPE-MJ adapters shall be manufactured by Central Plastics Company of Shawnee, Oklahoma, or approved equal.

TAPPING SLEEVES
(Mechanical Joint)

1. GENERAL

Tapping sleeves (mechanical joint) shall be constructed of ductile iron. All tapping sleeves shall be suitable for tapping cast iron, ductile iron pipe, C-900 PVC pipe, and all pipe manufactured in accordance with ANSI A21 Standard, AWWA, and these specifications.

2. PRODUCT

a. Tapping sleeves shall be of the split sleeve design; one half shall contain the outlet hub, gasket, and tapping flange; the other shall form the back of the sleeve. A ¾” NPT test plug shall be provided on the outlet throat of the sleeve for pressure testing the sealed sleeve at 150 psi prior to tapping the pipe. All tapping sleeves shall allow a full-size cutting head to pass through the outlet of the hub.

b. Tapping sleeves shall be constructed of ductile iron and shall be manufactured in accordance with ASTM A536.

c. All bolts and nuts joining the two halves of the sleeve shall be high strength, low alloy steel, such as Cor-Ten, in accordance with AWWA C-111, latest revision.

d. Tapping sleeve connection flanges shall conform to AWWA C-110/ANSI B16.1 Class 125 with counter bore per MSS SP-60 dimensions.

e. Mechanical joint tapping sleeves shall form a mechanical joint at each end of the sleeve after bolting the halves together. The sleeve shall then be sealed to the pipe by assembling the mechanical joint using split gaskets and follower glands.

f. All ductile iron sleeves shall have an outside bituminous coating in accordance with AWWA C-110, latest revision.

g. End and side gaskets shall be made of EPDM rubber.

3. QUALITY CONTROL AND TESTING

When submitting for approval of tapping sleeves (mechanical joint) not listed in Section 4, of this specification include manufacturer drawings and brochures that clearly indicate size, dimensions, weights, performance standards, etc. If this documentation is omitted, the tapping sleeves (mechanical joint) may be rejected at the sole option of the City.

4. MANUFACTURER

Tapping sleeve (mechanical joint) shall be domestically assembled. Tapping sleeves (mechanical joint) shall be manufactured by U.S. Pipe Mechanical Joint Tapping Sleeve, Mueller Co. H-615, American Flow Control or approved equal.

TAPPING SLEEVES
(Steel, "O-Ring" Type)

1. GENERAL

Tapping sleeves (steel/”O-ring” type) shall be constructed of high strength steel and shall be manufactured in accordance with ASTM A285. Steel tapping sleeves shall be suitable for tapping ductile iron pipe, C-900 PVC pipe, and all pipe manufactured in accordance with ANSI A21 Standards, AWWA, and these specifications.

2. PRODUCT

a. All tapping sleeves (steel or “O-ring” type) shall be split sleeve design; one half shall contain the outlet hub, gasket and tapping flange; the other half shall form the back. A ¾” NPT test plug shall be provided on the outlet throat of the sleeve for pressure testing the sealed sleeve at 150 psi prior to tapping the pipe. All tapping sleeves shall allow a full-size cutting head to pass through the outlet of the hub.

b. All bolts and nuts joining the two halves of the sleeve shall be high strength, low alloy steel, such as Cor-Ten, in accordance with AWWA C-111, latest revision.

c. All tapping sleeve connection flanges shall be a Class 125 flanged joint, conforming to AWWA C207 Class D, ANSI 150 lb. with a counter bore per MSS SP-60 dimensions.

d. Tapping sleeves shall seal to the pipe by the use of a confined "O-ring” gasket around the tap opening between the sleeve and pipe or by a full circumferential gasket between the sleeve and pipe. Gasket shall be made of EPDM rubber.

e. All steel tapping sleeves shall be finished with fusion-bonded epoxy coating both inside and outside, in accordance with AWWA C-550, latest revisions.

3. QUALITY CONTROL AND TESTING

When submitting for approval tapping sleeves (“o-ring” type) not listed in Section 4, include manufacturer drawings and brochures that clearly indicate size, dimensions, weights, performance standards, etc, which completely substantiates the tapping sleeves compliance with this specification. If this documentation is omitted, the tapping sleeves may be rejected at the sole option of the City.

4. MANUFACTURER

Tapping sleeve (steel/”o-ring” type) manufactures shall be domestically assembled. Tapping sleeves (steel/”o-ring” type) shall be manufactured by JCM 412, Smith Blair 622, Ford Meter Box FTSC, Dresser 610, Mueller H615, U.S. Pipe T9, or approved equal.

LINE STOPS (4”-42”)

1. GENERAL

Line stops shall be used to isolate sections of water mains in order to keep customers in service

during water main tie-ins, water main repairs and to compensate for broken valves. The water mains shall remain under pressure during the installation and use.

Line stops shall be constructed of ductile iron or stainless steel (carbon steel is acceptable subject to Engineer approval). All line stop bodies shall be suitable for tapping cast iron, asbestos cement pipe (12” and smaller), ductile iron pipe, C-900 PVC pipe, and all pipe manufactured in accordance with ANSI A21 Standard, AWWA, and these specifications. Line stops on asbestos cement pipe, on pipe greater than 8” and on pipe with taps the same size shall be mechanical joint.

Line stops (steel/”O-ring” type) shall be constructed of high strength steel and shall be manufactured in accordance with ASTM A285. Line stops shall be suitable for tapping ductile iron pipe, C-900 PVC pipe, and all pipe manufactured in accordance with ANSI A21 Standards, AWWA, and these specifications.

2. PRODUCT

a. Line stop fitting shall be full encirclement, pressure retention type split tee. It shall consist of two segments – an upper flange saddle plate and a lower saddle plate. All bodies shall have a ¾” NPT test plug to verify all seals are secure prior to tapping. Cover plate gasket shall be EPDM. Completion plug o-ring shall be EPDM. Gasket shall be molded from elastomer compounds that resist compression setting and are compatible with water in the 32 to 120 deg. F temperature range.

b. Line stop sleeve shall have a full-circle rubber gasket and a flanged outlet for bolting to the line stop tapping valve. Sealing may be accomplished by either split end gaskets and mechanical joint ends or a single rubber gasket around the tap opening.

c. Nuts-and-bolts shall be stainless steel.

d. Outlet flange shall be ductile iron, stainless steel, or machined from a 150 lb. forged steel flange (ASTM A181 or A105) or from pressure vessel quality steel plate (ASTM A285, Grade C), be flat-faced and drilled per ANSI B16.5

3. QUALITY CONTROL

a. Catalogs and manufacturer data shall be provided as required by the Engineer. The catalogs and maintenance data shall contain sufficient detail to serve as a guide in the line stop installation and the ordering of repair parts.

b. The Water Department may request samples of proposed line stops. Samples shall be supplied and/or returned to the Contractor at the Contractor's expense.

c. Failure to submit samples within 10 calendar days after the date of a written request shall result in rejection of that item.

d. The sleeves shall be rated at150 psi hydrostatic with a test pressure of 200 psi. and maintain zero leakage at all times.

4. MANUFACTURER

Line stops shall be domestically assembled equivalent to or better than Advanced Valve Technologies EZ Valve II, Hydra-Stop, JCM 440 Line Stop, or approved equal.

TAPPING SADDLES

1. GENERAL

Tapping saddles shall be constructed of heavy gray cast iron, or ductile iron, with the attachment straps, nuts, and washers constructed of corrosion resistant alloy steel in accordance with AWWA C-111, latest revision.

2. PRODUCT

a. All tapping saddles shall be suitable for Class C & D gray cast iron, ductile cast iron pipe, and all pipe manufactured in accordance with ANSI A21 Standards.

b. Tapping saddles shall seal to the pipe by the use of a confined "O- ring” gasket, and shall be able to withstand a pressure of 150 psi with no leakage in accordance with AWWA C-110, latest revision. A ¾” NPT test plug shall be provided for pressure testing.

c. The outlet branch flange shall be Class 125 flange joint with a counter bore per MSS SP-60 dimensions.

d. Tapping saddles shall have outside bituminous coating in accordance with AWWA C-110, latest revision.

3. QUALITY CONTROL AND TESTING

When submitting for approval a tapping saddle not listed in Section 4, include manufacturer drawings and brochures that clearly indicate size, dimensions, weights, performance standards, etc. If this documentation is omitted, the tapping saddle may be rejected at the sole option of the City.

4. MANUFACTURER

Tapping saddles shall be manufactured by American Ductile Iron Pipe, U.S. Pipe, or approved equal.

ASPHALTIC CONCRETE

1. GENERAL

All asphaltic concrete shall satisfy the requirements of the appropriate regulatory agency having jurisdiction over the affected roadway.

2. PRODUCT

a. Superpave Ashpaltic Concrete shall satisfy all provisions of the FDOT Standards for Road and Bridge Construction, Section 334, latest edition.

b. All Type S Asphaltic Concretes shall satisfy all provisions of FDOT Standards for Road and Bridge Construction Section 331, 2000 Edition.

c. Superpave Asphalt Base Courses shall satisfy all provisions of the FDOT Standards for Road and Bridge Construction Section 234, latest edition.

d. All Asphalt Base Courses shall satisfy all provisions of FDOT Standards for Road and Bridge Construction Section 280, 2000 Edition.

3. QUALITY CONTROL AND TESTING

The Contractor will be responsible for providing copies of all necessary plant production tests. The City will be responsible for providing all initial field performance testing in accordance with the aforementioned specifications. The Contractor will be responsible for retesting of any failed sections.

BASE MATERIAL

1. GENERAL

All base material shall satisfy the requirements of the regulatory agency responsible for overseeing that portion of the right-of-way.

2. PRODUCT

a. Shell material shall satisfy all requirements of Section 913, Shell Material, of the Florida Department of Transportation Standard Specifications for Road and Bridge Construction, latest edition, except that testing requirements shall be in conformance with the requirements of the regulatory agency responsible for overseeing the roadway.

b. Limerock base shall satisfy all requirements of Section 911, Limerock Material for Base and Stabilized Base, of the Florida Department of Transportation Standard Specifications for Road

and Bridge Construction latest edition, except that testing requirements shall be in conformance with the requirements of the regulatory agency responsible for overseeing the roadway.

c. Crushed concrete base shall satisfy all requirements of Section 204, Graded Aggregate Base, of the Florida Department of Transportation Standard Specifications for Road and Bridge Construction 2000 Edition, except that testing requirements shall be in conformance with the requirements of the regulatory agency responsible for overseeing the roadway.

d. Superpave Asphalt Base Courses shall satisfy all provisions of Section 234, Superpave Asphalt Base, of the Florida Department of Transportation Standard Specifications for Road and Bridge Construction latest edition, except that testing requirements shall be in conformance with the requirements of the regulatory agency responsible for overseeing the roadway.

e. Asphalt Base Courses shall satisfy all provisions of Section 280, Asphalt Base Courses, of the Florida Department of Transportation Standard Specifications for Road and Bridge Construction 2000 Edition, except that testing requirements shall be in conformance with the requirements of the regulatory agency responsible for overseeing the roadway.

3. QUALITY CONTROL AND TESTING

The Contractor will be responsible for providing copies of all initial materials tests to establish conformance to the contract documents. The City will be responsible for providing all initial field performance testing in accordance with the aforementioned specifications. The Contractor will be responsible for retesting of any failed sections.

STANDARD DETAILS FOR RESTORATION WITHIN ROADWAY

(Details Modified From FDOT Design Standards Index 307))

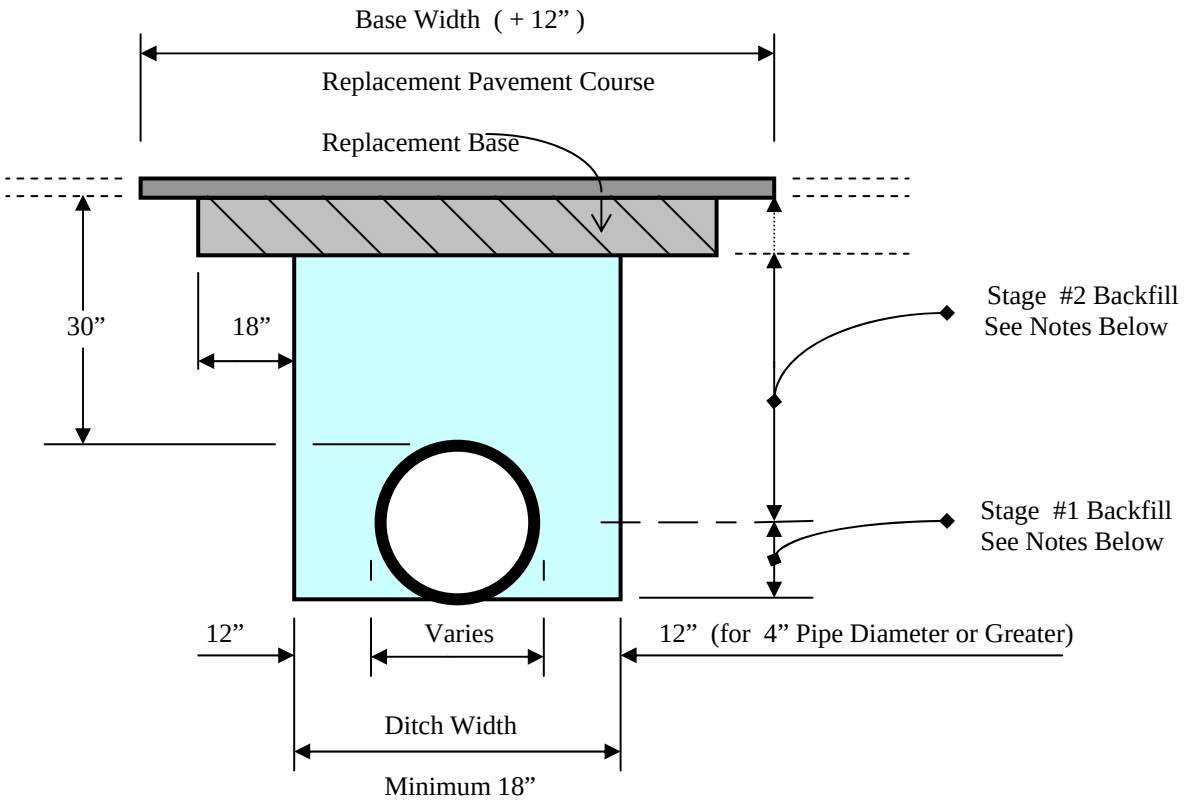

FLEXIBLE PAVEMENT NOTES:

Pavement shall be mechanically sawed.

Pavement, Base, and Backfill material shall be placed in accordance with **City of Tampa Pavement Restoration Requirements – 2009**

In Stage #1, construct compacted fill beneath the haunches of the pipe , using mechanical tamps suitable for this purpose.
This compaction applies to the material placed beneath the haunches of the pipe and above any bedding.

In Stage # 2, construct compacted fill along sides of the pipe and up to the bottom of the base. Compact material using mechanical tamps suitable to achieve Density meeting 98% of AASHTO T-180, lifts not to exceed 12” compacted.

If mechanical compaction is difficult to achieve, then flowable fill may be used. In Stage #1, place flowable fill midway up on both sides of the utility. Allow to harden before placing Stage #2. If a method is provided to prevent floatation from occurring, Stage #1 and #2 can be combined, if approved by the Engineer.

Note: Specification Standards and Requirements not illustrated shall meet latest FDOT Standard Specifications.

STANDARD DETAILS FOR RESTORATION WITHIN ROADWAY

(Details Modified From FDOT Design Standards Index 307))

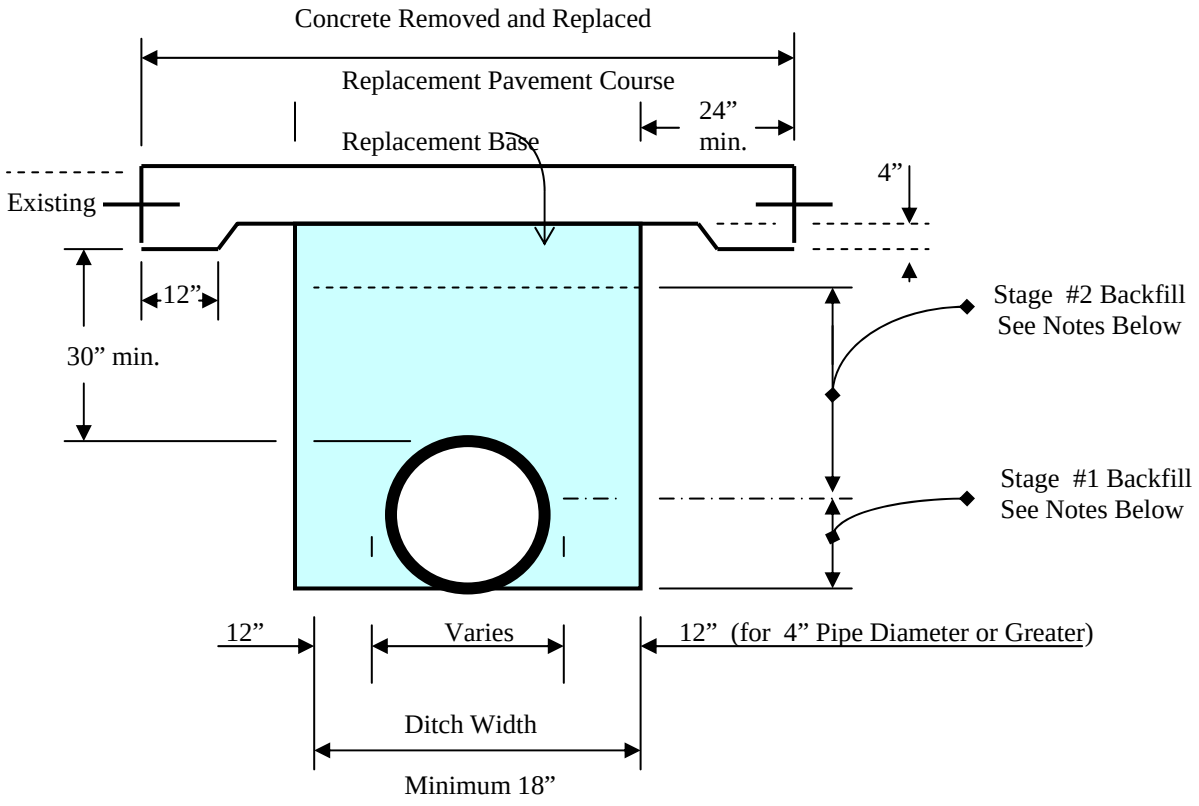

RIGID PAVEMENT NOTES:

Pavement shall be mechanically sawed and restored to conform with existing pavement joints.

High early strength cement concrete (3000 psi) meeting the requirements of FDOT Standard Specification 346 shall be used for rigid pavement replacement.

Pavement, Base, and Backfill material shall be placed in accordance with **City of Tampa Pavement Restoration Requirements – 2009**

In Stage #1, construct compacted fill beneath the haunches of the pipe , using mechanical tamps suitable for this purpose.
This compaction applies to the material placed beneath the haunches of the pipe and above any bedding.

In Stage # 2, construct compacted fill along sides of the pipe and up to the bottom of the base. Compact material using mechanical tamps suitable to achieve Density meeting 98% of AASHTO T-180, lifts not to exceed 12” compacted.

If mechanical compaction is difficult to achieve, then flowable fill may be used. In Stage #1, place flowable fill midway up on both sides of the utility. Allow to harden before placing Stage #2. If a method is provided to prevent floatation from occurring, Stage #1 and #2 can be combined, if approved by the Engineer.

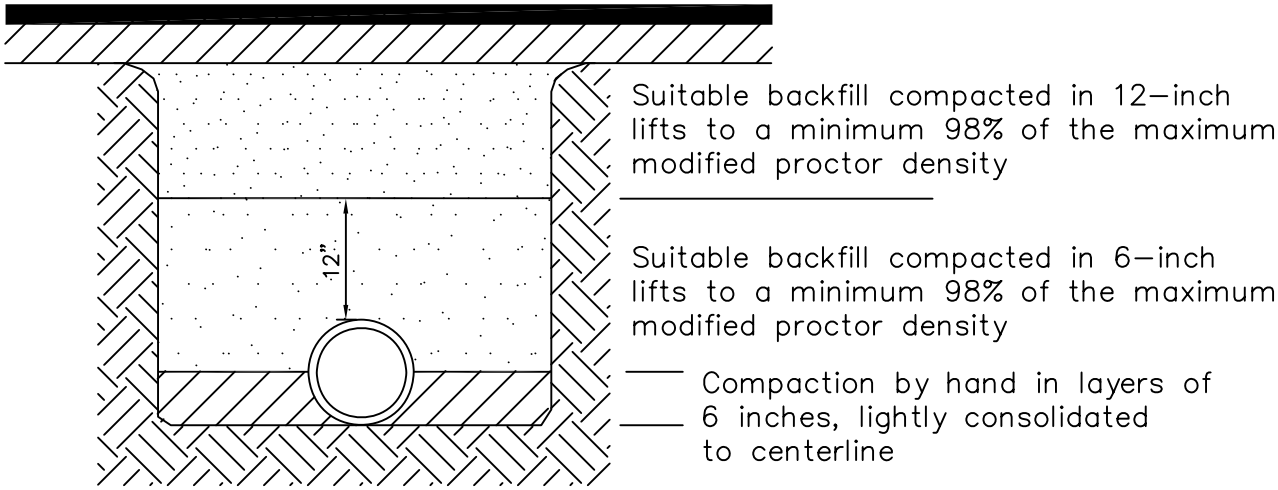

NOTES:

1. Type 2 trench is defined as a flat-bottom trench. Lightly consolidate backfill to centerline of pipe.
2. This standard shall be utilized in the absence of specific standards. The standard of the agency controlling the Right-of-Way shall govern unless otherwise directed by the Engineer.
3. Suitable backfill shall be defined as material free from cinders, ashes, refuse, clay, organic matter, boulders, rocks or stones, or other material that in the opinion of the Engineer is unsuitable.
4. Non-pervious areas shall mean any concrete or asphalt curb, sidewalk, trail, driveway, or roadway.

TAMPA WATER DEPARTMENT	APPROVED Sept. 2011	REVISED	TRENCHING, BEDDING AND BACKFILL DETAIL FOR NON-PERVIOUS (paved) AREAS	2.01

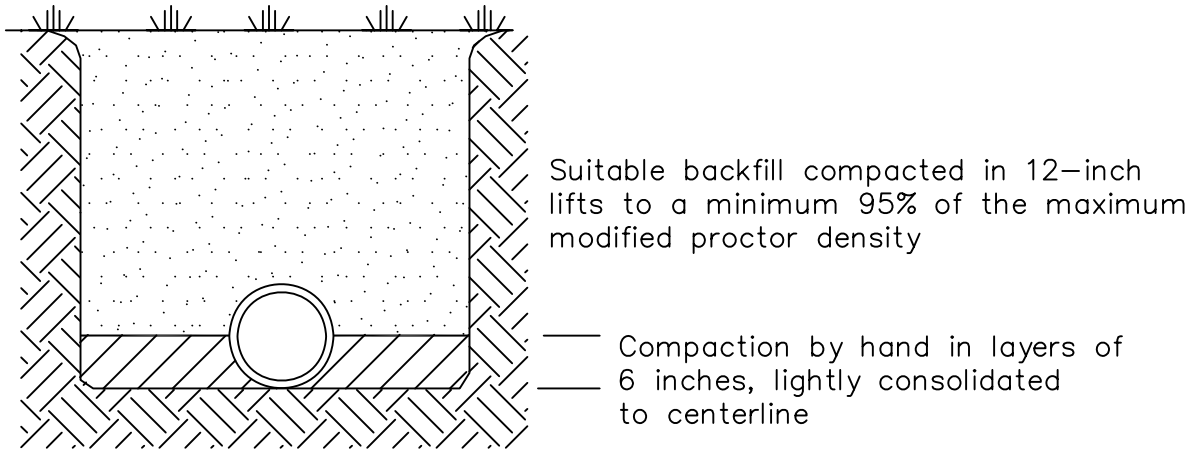

NOTES:

1. Type 2 trench is defined as a flat–bottom trench. Lightly consolidate backfill to centerline of pipe.
2. This standard shall be utilized in the absence of specific standards. The standard of the agency controlling the Right–of–Way shall govern unless otherwise directed by the Engineer.
3. Suitable backfill shall be defined as material free from cinders, ashes, refuse, clay, organic matter, boulders, rocks or stones, or other material that in the opinion of the Engineer is unsuitable.
4. Non–paved area is a pervious area. If any part of the trench is within a concrete or asphalt curb, sidewalk, driveway, or roadway, then Standard Detail 2.01 applies.

TAMPA WATER DEPARTMENT	APPROVED Sept. 2011	REVISED	TRENCHING, BEDDING AND BACKFILL DETAIL FOR PERVIOUS (non–paved) AREAS	2.02

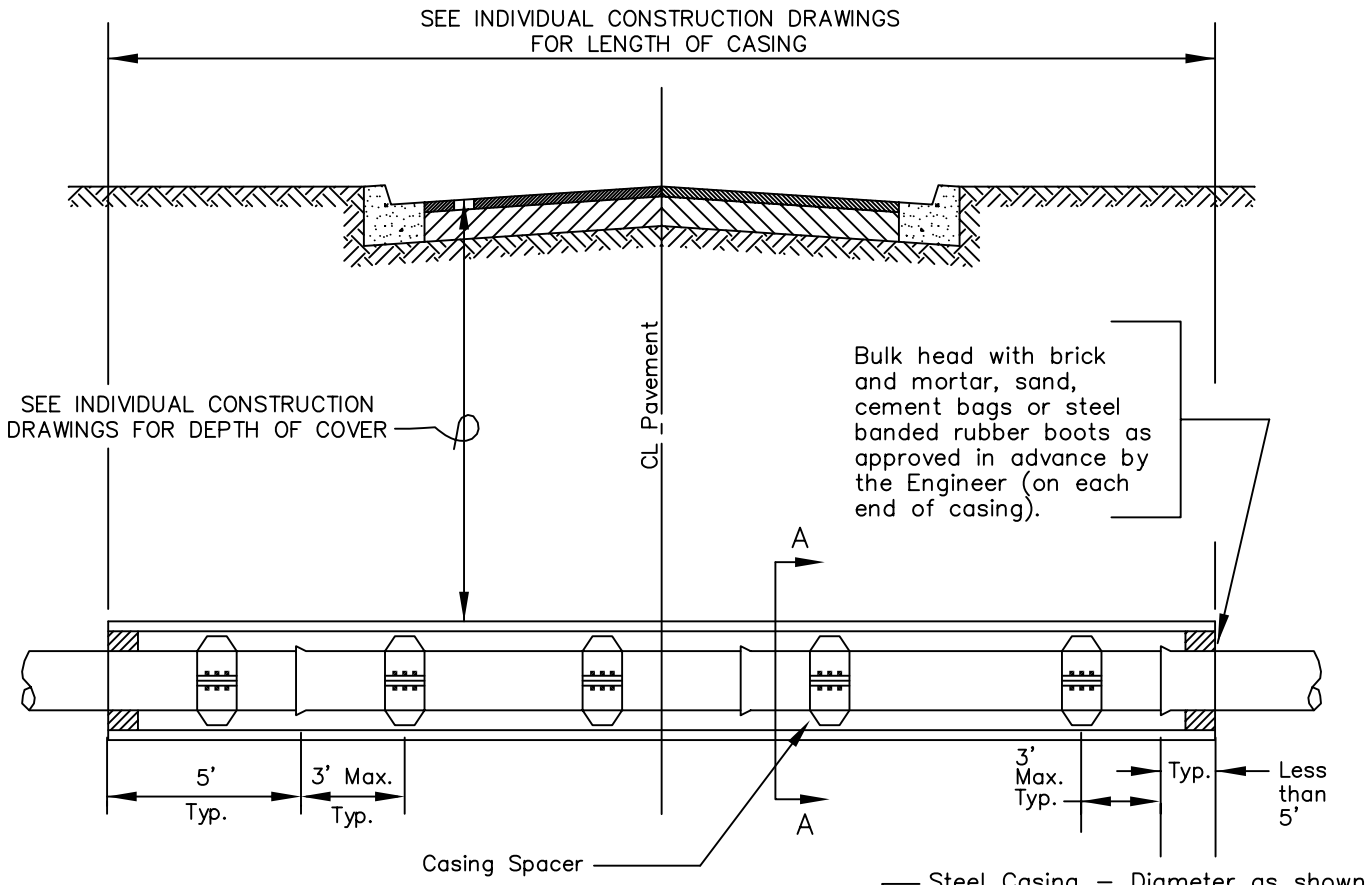

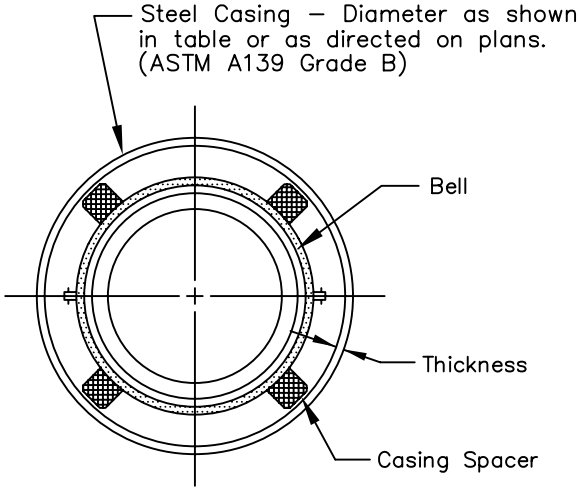

SECTION A – A

D.I.P. Carrier Pipe (P.O.) Nominal Diameter (inches)	Casing O.D. (inches)	Thickness
2	4	1/4"(.250)
4	12	1/4"(.250)
6	14	9/32"(.281)
8	16	9/32"(.281)
12	20	11/32"(.344)
16	24	13/32"(.406)
20	30	15/32"(.469)
24	36	17/32"(.531)
30	42	9/16"(.563)
36	48	9/16"(.563)
42	54	9/16"(.563)

NOTES:
1. Pipelines with bends less than 20' from casing entrance shall be secured by both retainer glands and thrust blocks.
2. Casing pipe sizes listed are for push–on joint carrier pipe only.
3. Two spacers per joint minimum spaced as shown or as directed by the Engineer.

TAMPA WATER DEPARTMENT	APPROVED Sept, 2011	REVISED	JACKING & BORING FOR PAVEMENT CROSSING	2.03

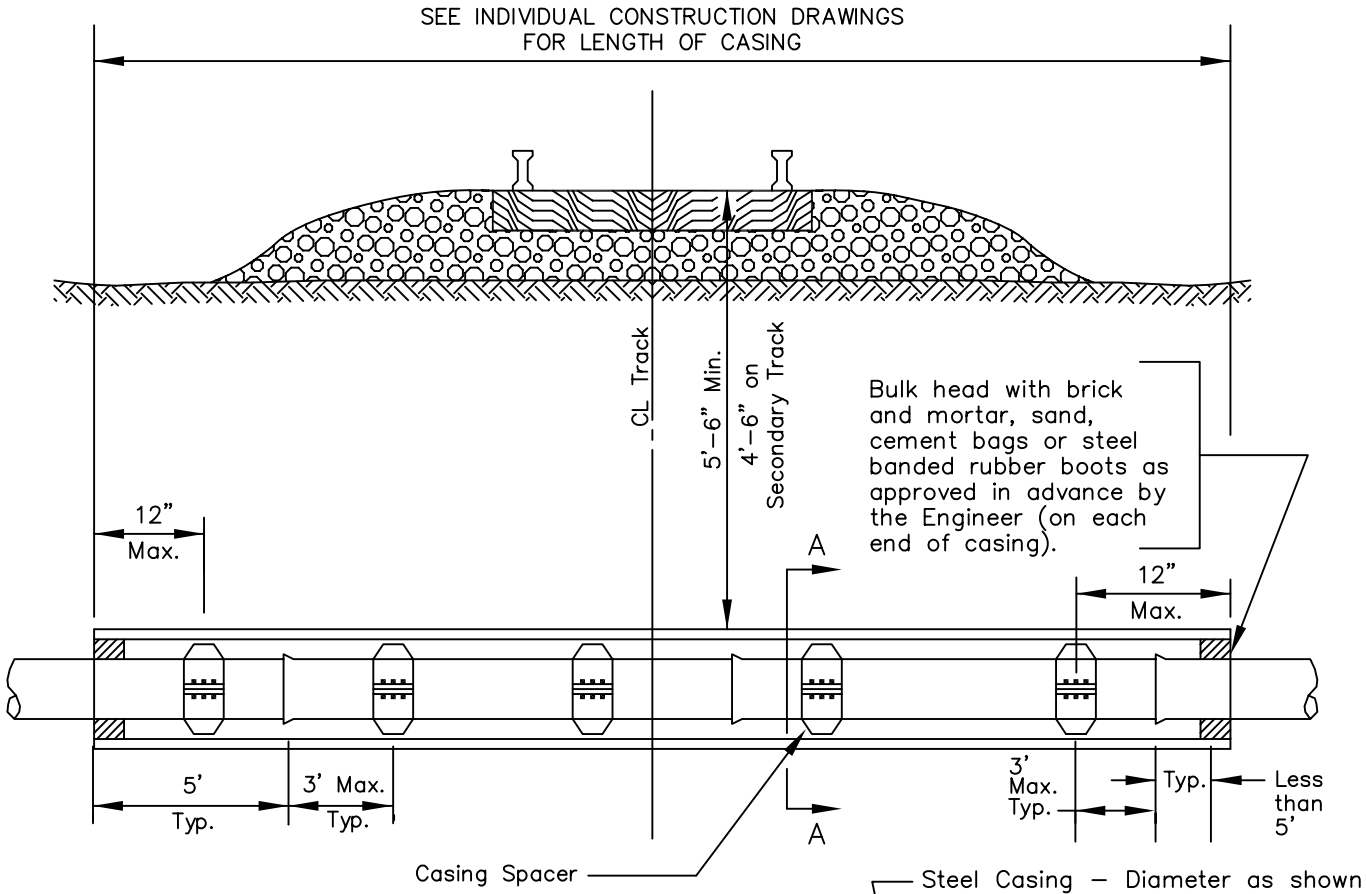

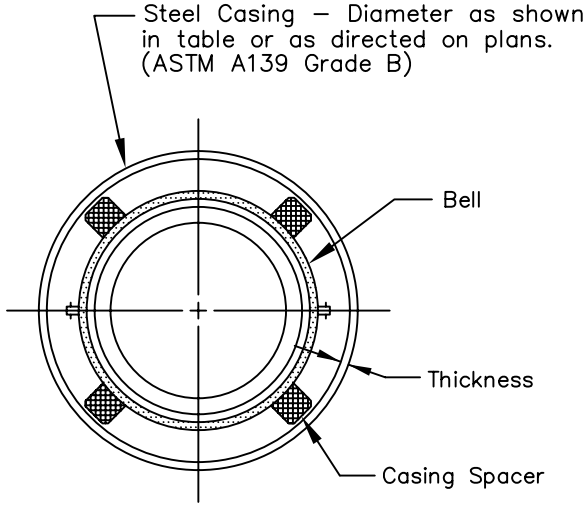

SECTION A – A

D.I.P. Carrier Pipe (P.O.) Nominal Diameter (Inches)	Casing O.D. (Inches)	Thickness
2	4	1/4"(.250)
4	12	1/4"(.250)
6	14	9/32"(.281)
8	16	9/32"(.281)
12	20	11/32"(.344)
16	24	13/32"(.406)
20	30	15/32"(.469)
24	36	17/32"(.532)
30	42	5/8"(.625)
36	48	11/16"(.688)
42	54	25/32"(.781)

NOTES:
1. Pipelines with bends less than 20' from casing entrance shall be secured by both retainer glands and thrust blocks.
2. Casing pipe sizes listed are for push–on joint carrier pipe only.
3. Two spacers per joint minimum spaced as shown or as directed by the Engineer.

TAMPA WATER DEPARTMENT	APPROVED Sept., 2011	REVISED	JACKING & BORING FOR RAILROAD CROSSINGS	2.04

METHOD A

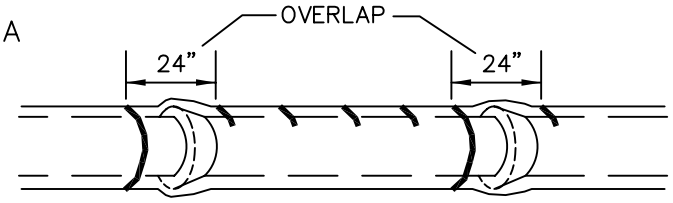

Polyethylene tube is cut into lengths approximately two feet longer than the pipe section and placed around it. After the pipe joint is assembled, the polyethylene tube is made to overlap the joint and the overlap secured in place. Since the tube is considerably larger than the barrel of pipe, it is made to fit snugly by folding over at the top and securing with tape every 24" along the pipe section.

METHOD B

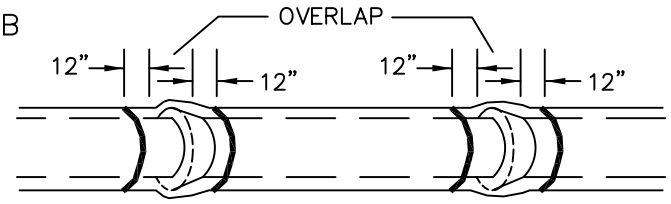

Polyethylene tube is cut one foot shorter than the length of the pipe section. After placement of the pipe, it is folded and secured snugly overall. A three foot length of polyethylene tube placed over the end of the preceeding section is then pulled in place over the joint after assembly and secured.

METHOD C

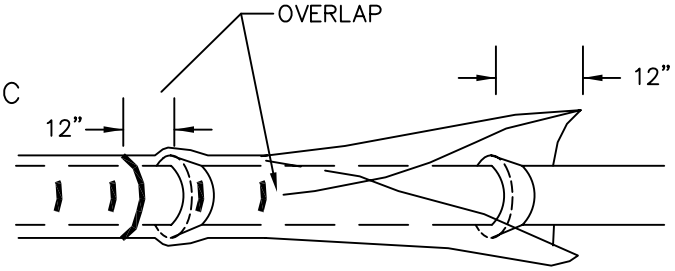

Polyethylene sheet is cut to a length two feet longer than the pipe section. The sheet is wrapped around the pipe so that it overlaps circumferentially over the top quadrant of the pipe, then secured. After joint assembly, the surplus length of polyethylene film is secured around the joint, providing an overlap of each joint. Tape at each joint and at 3' intervals in between.

NOTES:
1. Use blue polyethylene film and tape only.
2. Polyethylene film shall be a minimum of 8 mil. thickness.
3. Spiral Wrap not required with polywrap.

TAMPA WATER DEPARTMENT	APPROVED	REVISED		POLYETHYLENE ENCASEMENT INSTALLATION DETAIL	2.05
	Sept. 2011	JRD	4/09		
		JRD	9/2011		

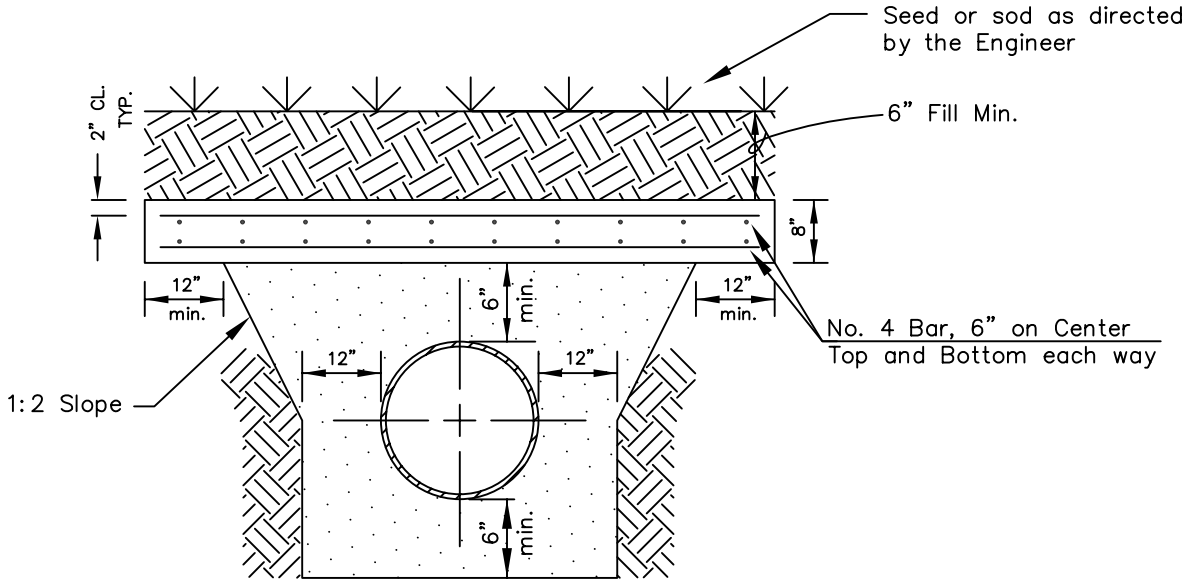

GRASSED SECTION

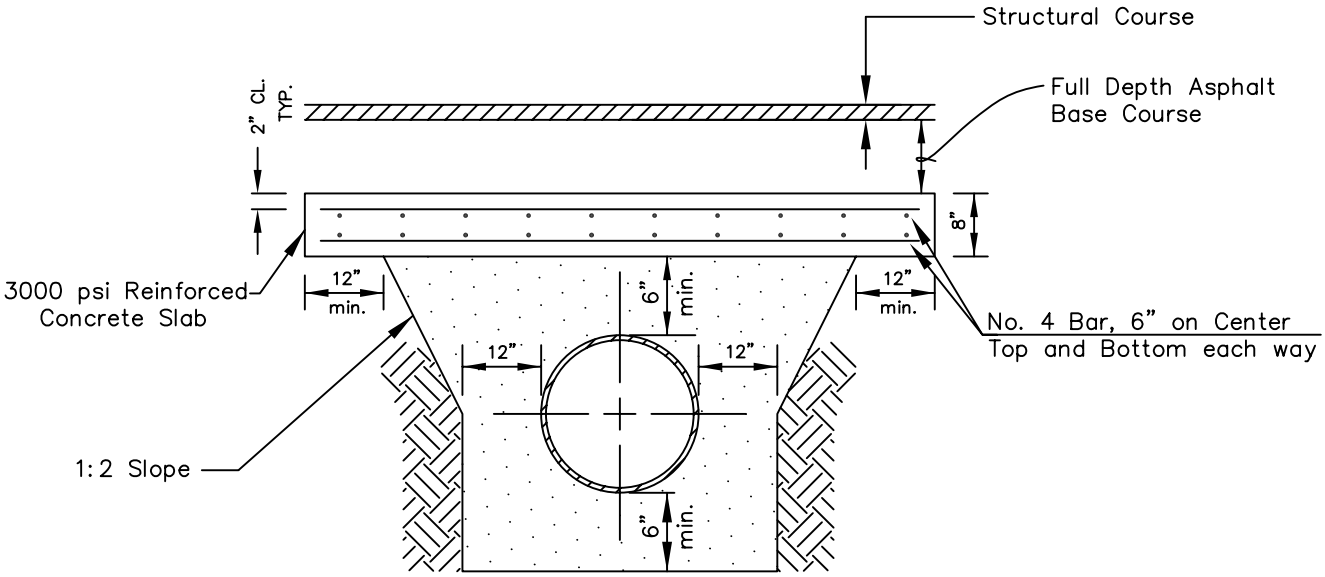

ROADWAY SECTION

NOTES:

1. Structural course and base course requirement shall be established by the agency having jurisdiction.
2. Shock pads for mains too shallow for the above configuration shall be designed on a case–by–case basis.

TAMPA WATER DEPARTMENT	APPROVED Sept. 2011	REVISED	REINFORCED CONCRETE SHOCK PAD (FOR COVER LESS THAN 2.5')	2.06

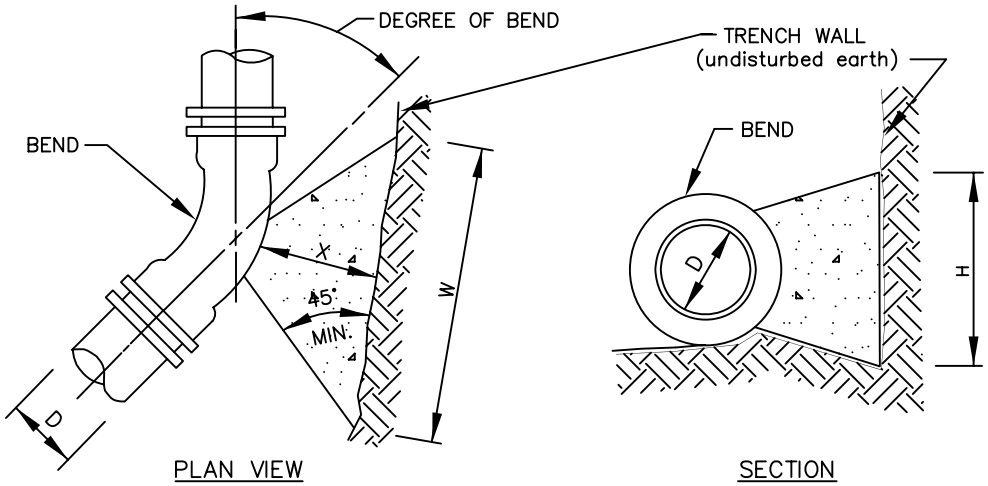

DIMENSIONS OF THRUST BLOCKS FOR GOOD SOIL

	SIZE (D)	4"	6"	8"	12"	16"	20"	24"
11–1/4° BEND	THRUST (lbs.)	674	1393	2396	5097	8857	13,649	19,472
	BEARING AREA (ft.^{2})	0.51	1.05	1.80	3.83	6.65	10.25	14.63
	CONCRETE (yds.^{3})	0.005	0.015	0.033	0.104	0.239	0.459	0.783
	H (ft.)	0.6	0.8	1.1	1.6	2.1	2.6	3.1
	W (ft.)	0.9	1.3	1.6	2.4	3.2	3.9	4.7
	X (ft.)	0.4 Min.	0.6 Min.	0.8 Min.	1.2 Min.	1.6 Min.	2.0 Min.	2.3 Min.
22–1/2° BEND	THRUST (lbs.)	1342	2772	4769	10,145	17,628	27,166	38,757
	BEARING AREA (ft.^{2})	1.01	2.08	3.58	7.61	13.22	20.37	29.07
	CONCRETE (yds.^{3})	0.012	0.035	0.080	0.252	0.580	1.113	1.792
	H (ft.)	0.8	1.2	1.5	2.3	3.0	3.7	4.4
	W (ft.)	1.2	1.8	2.3	3.4	4.5	5.5	6.6
	X (ft.)	.06 Min.	0.9 Min.	1.2 Min.	1.7 Min.	2.2 Min.	2.8 Min.	3.0 Min.
45° BEND	THRUST (lbs.)	2632	5437	9355	19,901	34,579	53,288	76,024
	BEARING AREA (ft.^{2})	1.97	4.08	7.02	14.93	25.94	39.98	57.04
	CONCRETE (yds.^{3})	0.029	0.087	0.198	0.620	1.387	2.301	3.517
	H (ft.)	1.2	1.7	2.2	3.2	4.2	5.2	6.2
	W (ft.)	1.7	2.5	3.2	4.7	6.2	7.7	9.3
	X (ft.)	0.9 Min.	1.2 Min.	1.6 Min.	2.4 Min.	3.0 Min.	3.0 Min.	3.0 Min.
90° BEND	THRUST (lbs.)	4863	10,047	17,286	36,772	63,894	98,463	140,474
	BEARING AREA (ft.^{2})	3.65	7.53	12.96	27.58	47.91	73.84	105.34
	CONCRETE (yds.^{3})	0.068	0.203	0.459	1.360	2.561	4.250	6.496
	H (ft.)	1.6	2.2	3.0	4.3	5.7	7.0	8.4
	W (ft.)	2.3	3.4	4.4	6.4	8.5	10.5	12.6
	X (ft.)	1.2 Min.	1.7 Min.	2.2 Min.	3.0 Min.	3.0 Min.	3.0 Min.	3.0 Min.

NOTES:
1. Concrete shall be kept at sufficient distance from joint for removal of all joint accessories including bolts.
2. All bearing surfaces to be carried to undisturbed soil.
3. This table shows the minimum size thrust blocks for soil bearing pressure of 2000 psf and an internal pressure of 190 psi. Cover to T.O.P. is 3 feet for 12" and smaller mains; 4 feet for 16" and larger mains.
* 4. Poor and wet soil (silty soils, clay, muck and peat) will require larger thrust blocks.
5. Fittings shall be completely polywrapped prior to pouring thrust blocks.

*WARNING

TAMPA WATER DEPARTMENT	APPROVED Sept. 2011	REVISED	THRUST BLOCKS FOR BENDS	2.07

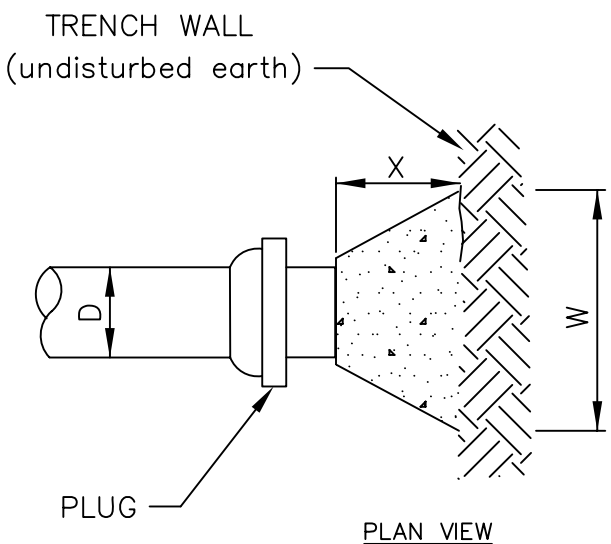

PLAN VIEW

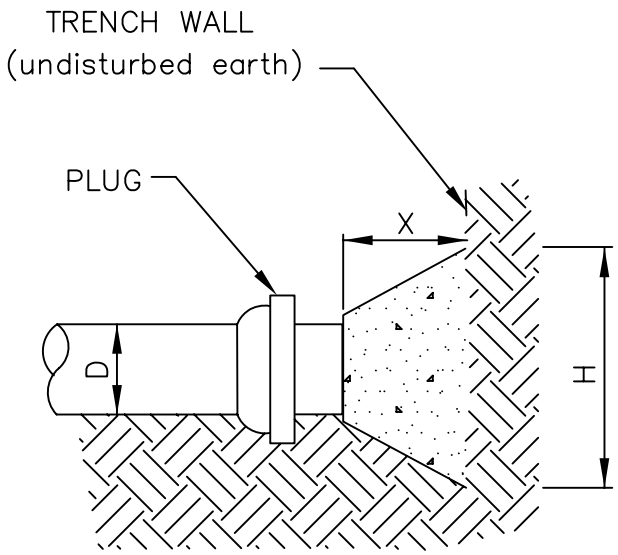

SECTION

DIMENSIONS OF THRUST BLOCKS FOR GOOD SOIL

	SIZE (D)	4"	6"	8"	12"	16"	20"	24"
PLUG	THRUST (lbs.)	3439	7104	12,223	26,002	45,180	69,624	99,330
	BEARING AREA (ft.^{2})	2.58	5.33	9.17	19.50	33.89	52.22	74.50
	CONCRETE (yds.^{3})	0.042	0.126	0.285	0.891	1.811	3.005	4.594
	H (ft.)	1.3	1.9	2.5	3.6	4.8	5.9	7.0
	W (ft.)	2.0	2.8	3.7	5.4	7.1	8.9	10.6
	X (ft.)	1.0 Min.	1.4 Min.	1.9 Min.	2.7 Min.	3.0 Min.	3.0 Min.	3.0 Min.

NOTES:
1. Concrete shall be kept at sufficient distance from joint for removal of all joint accessories including bolts.
2. All bearing surfaces to be carried to undisturbed soil.
3. This table shows the minimum size thrust blocks for soil bearing pressure of 2000 psf and an internal pressure of 190 psi. Cover to T.O.P. is 3 feet for 12" and smaller mains; 4 feet for 16" and larger mains.

*4. Poor and wet soil (silty soils, clay, muck and peat) will require larger thrust blocks.

5. Plugs shall be completely polywrapped prior to pouring thrust blocks.

*WARNING

TAMPA WATER DEPARTMENT	APPROVED Sept. 2011	REVISED	THRUST BLOCKS FOR PLUGS	2.08

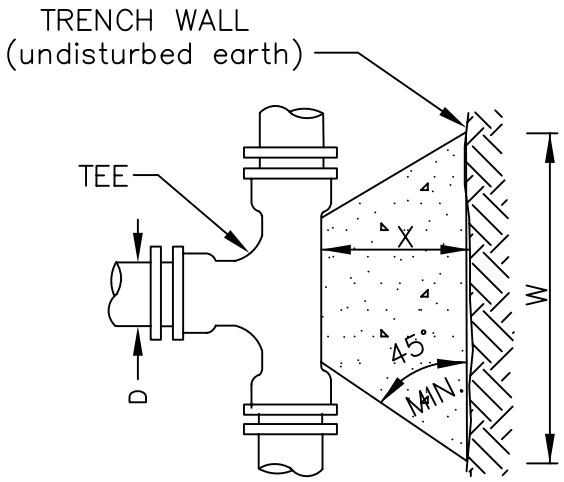

PLAN VIEW

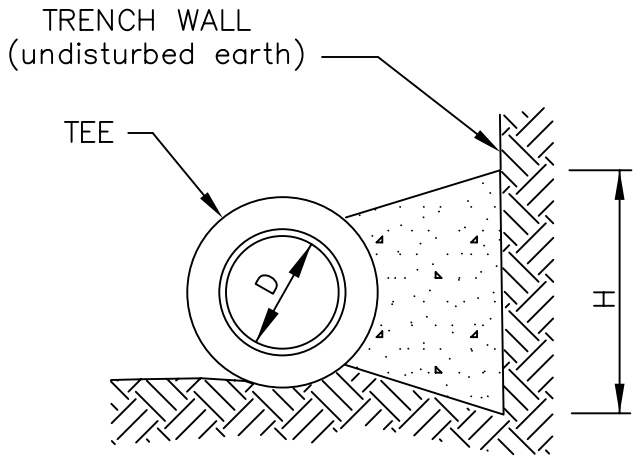

SECTION

DIMENSIONS OF THRUST BLOCKS FOR GOOD SOIL

	SIZE (D)	4"	6"	8"	12"	16"	20"	24"
TEES	THRUST (lbs.)	3439	7104	12,223	26,002	45,180	69,624	99,330
	BEARING AREA (ft.^{2})	2.58	5.33	9.17	19.50	33.89	52.22	74.50
	CONCRETE (yds.^{3})	0.042	0.126	0.285	0.891	1.811	3.005	4.594
	H (ft.)	1.3	1.9	2.5	3.6	4.8	5.9	7.0
	W (ft.)	2.0	2.8	3.7	5.4	7.1	8.9	10.6
	X (ft.)	1.0 Min.	1.4 Min.	1.9 Min.	2.7 Min.	3.0 Min.	3.0 Min.	3.0 Min.

NOTES:

1. Size (D), shall be the branch size of tees.
2. Concrete shall be kept at sufficient distance from joint for removal of all joint accessories including bolts.
3. All bearing surfaces to be carried to undisturbed soil.
4. This table shows the minimum size thrust blocks for soil bearing pressure of 2000 psf and an internal pressure of 190 psi.

*5. Cover to T.O.P. is 3 feet for 12" and smaller mains; 4 feet for 16" and larger mains. poor and wet soil (silty soils, clay, muck and peat) will require larger thrust blocks.

6. Tees shall be completely polywrapped prior to pouring thrust block.

*WARNING

TAMPA WATER DEPARTMENT	APPROVED Sept. 2011	REVISED	THRUST BLOCKS FOR TEES	2.09

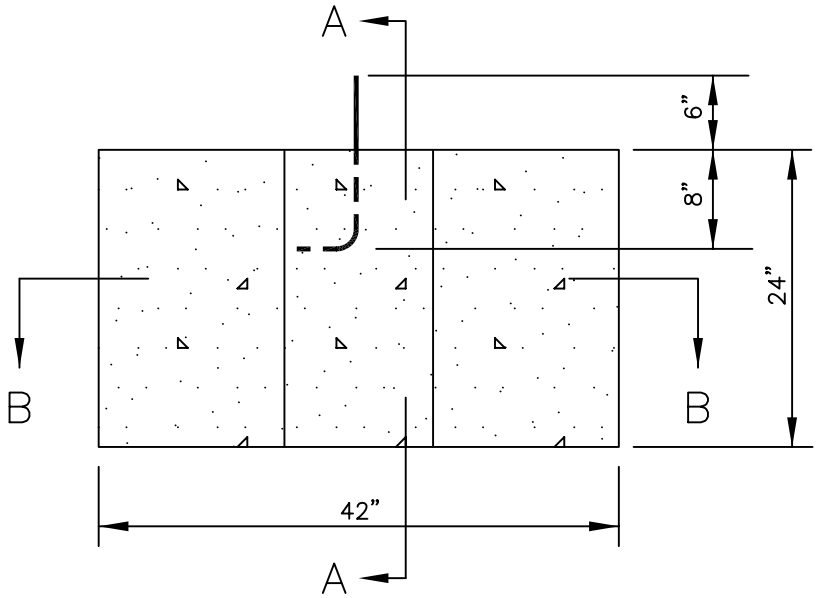

ELEVATION

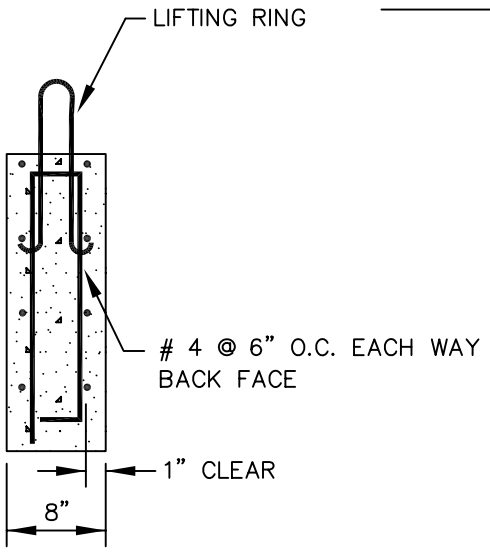

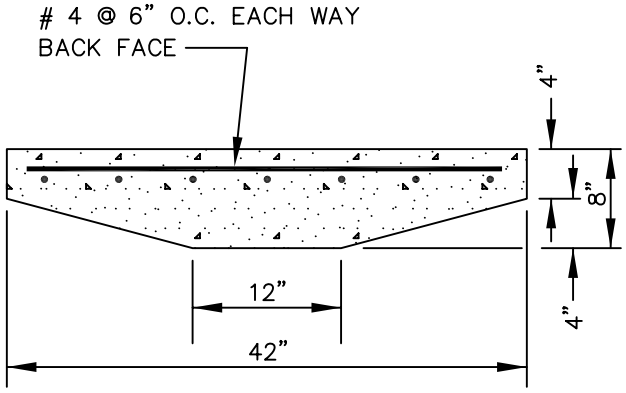

SECTION A–A

SECTION B – B

Notes:

1. Reinforcing to be standard 60 ksi deformed bar.
2. Concrete f'c=3000 psi
3. Precast thrust blocking to be used only on fire hydrants and 8" or smaller fittings, if allowed by the Engineer.
4. A 12"x18" spacer block shall be placed between the precast thrust block and fitting if so directed by the Engineer.

TAMPA WATER DEPARTMENT	APPROVED Sept. 2011	REVISED	PRECAST CONCRETE THRUST BLOCK	2.10

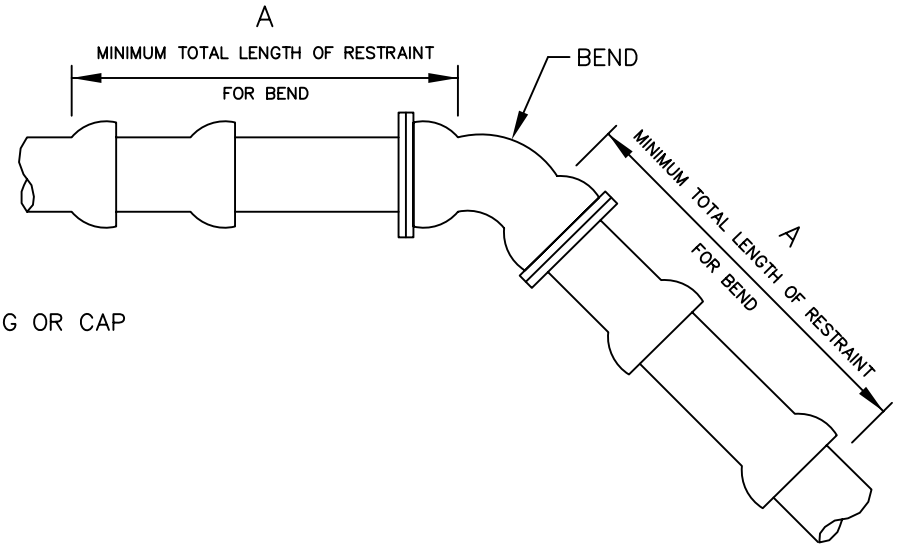

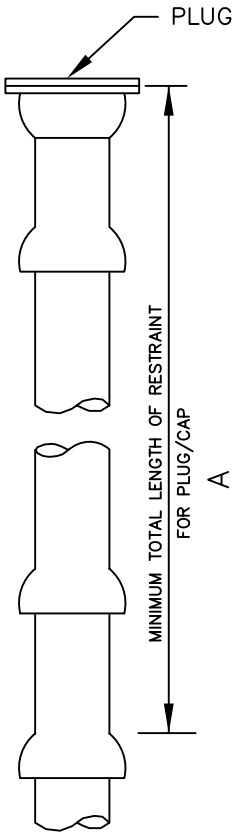

RESTRAIN "A" (LF)									
Fitting/OD	4"	6"	8"	12"	16"	20"	24"	30"	36"
11–1/4°	3	4	6	8	9	10	12	15	17
22–1/2°	6	9	12	16	17	21	25	30	35
45°/Offset	13	18	24	34	36	44	52	62	73
90°	31	44	58	82	87	106	125	151	176
Plug/Cap	55	78	102	143	143	174	204	245	285

A=Minimum footage of pipe to be restrained.

NOTES:

1. This table is based on:
   a) maximum test pressure of 190 psi
   b) laying condition type 2 (see Details 2.01 and 2.02)
   c) poor soil conditions
   d) using D.I.P.
   e) 3 feet of cover for 12" and smaller mains; 4 feet of cover for 16" and larger mains
   f) Horizontal bends only – Engineer to submit calculations for vertical restraints
2. For polywrapped D.I.P., increase the footage to restrain by 25%.
3. For PVC pipe, increase the footage to restrain by 20%.
4. "Restrained" pipe shall be Manufactured Restrained Joint pipe, push–on joint pipe restrained w/gasket–type "Gripper Restraints", or mechanical joint pipe restrained by Megalug (or approved equivalant).
5. Any additional fittings within the restrained section shall be restrained accordingly.

TAMPA WATER DEPARTMENT	APPROVED Sept, 2011	REVISED	RESTRAINED JOINT STANDARD FOR BENDS, PLUGS, AND CAPS	2.11

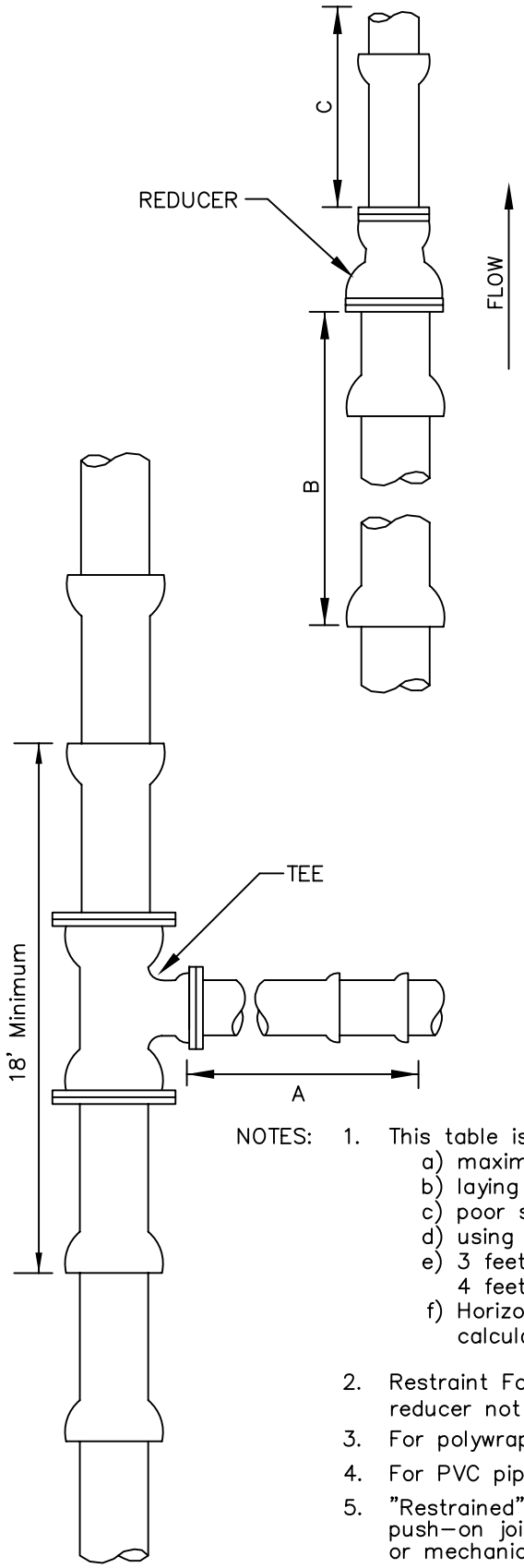

Fitting Size	Restrain (LF) Tee "A"	Restrain (LF) Reducer "B"	Unrestrained Straight Run (LF) Reducer "C"
4x4	25	*	*
6x4	11	40	59
6x6	48	*	*
8x4	A.T.	73	142
8x6	38	43	56
8x8	72	*	*
12x4	A.T.	124	364
12x6	19	104	208
12x8	57	76	115
12x12	114	*	*
16x6	A.T.	121	321
16x8	27	104	212
16x12	77	61	82
16x16	118	*	*
20x6	A.T.	156	527
20x8	14	144	369
20x12	68	109	186
20x16	111	61	77
20x20	149	*	*
24x6	A.T.	189	777
24x8	A.T.	179	560
24x12	59	150	313
24x16	104	111	172
24x20	144	61	74
24x24	179	*	*
30x6	A.T.	234	1227
30x8	A.T.	226	904
30x12	45	204	542
30x16	94	173	341
30x20	135	134	208
30x24	172	86	110
30x30	220	*	*
36x6	A.T.	276	1784
36x8	A.T.	269	1328
36x12	30	251	824
36x16	83	226	551
36x20	127	195	373
36x24	165	156	245
36x30	215	86	106
36x36	261	*	*

A.T.—Restraint required at Tee only.
*—not applicable

NOTES:

1. This table is based on:
   a) maximum test pressure of 190 psi
   b) laying condition type 2 (see Details 2.01 and 2.02)
   c) poor soil conditions
   d) using D.I.P.
   e) 3 feet of cover for 12" and smaller mains; 4 feet of cover for 16" and larger mains
   f) Horizontal bends only – Engineer to submit calculations for vertical restraints
2. Restraint For Reducers: If "C" straight run of pipe downstream of reducer not available, then restrain "B" upstream of reducer.
3. For polywrapped D.I.P., increase the footage to restrain by 25%.
4. For PVC pipe, increase the footage to restrain by 20%.
5. "Restrained" pipe shall be Manufactured Restrained Joint pipe, push–on joint pipe restrained w/gasket–type "Gripper Restraints", or mechanical joint pipe restrained by Megalug (or approved equivalant).
6. Any additional fittings within the restrained section shall be restrained accordingly.

TAMPA WATER DEPARTMENT	APPROVED Sept., 2011	REVISED	RESTRAINED JOINT STANDARD FOR TEES AND REDUCERS	2.12

PLAN

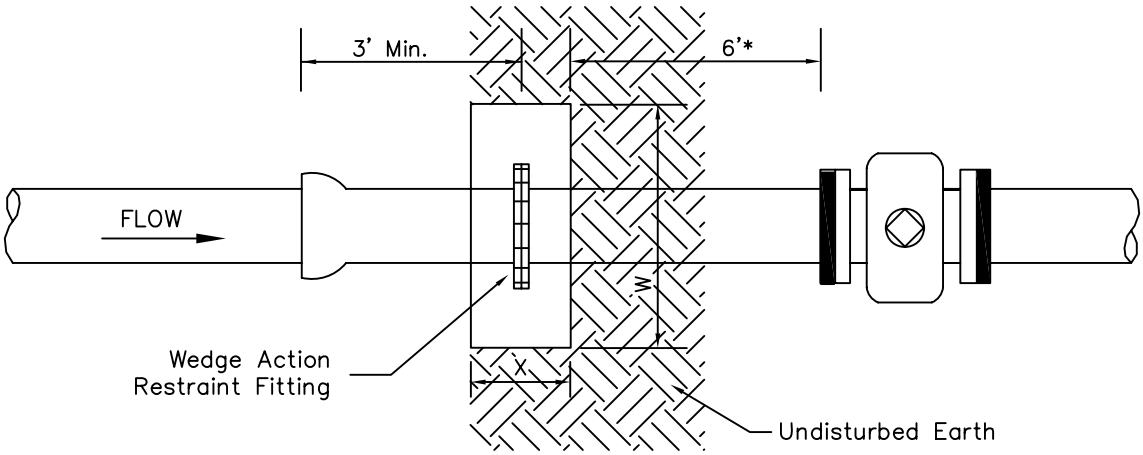

PROFILE

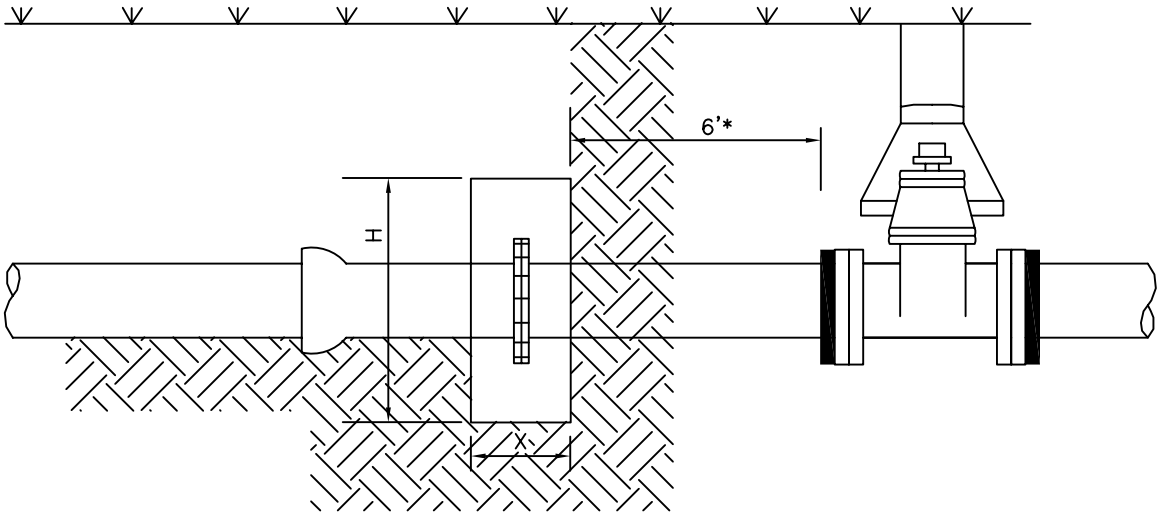

SIZE (D)	4"	6"	8"	12"	16"	20"	24"
THRUST (lbs.)	3439	7104	12,223	26,002	45,180	69,624	99,330
BEARING AREA (ft.^{2})	2.58	5.33	9.17	19.50	33.89	52.22	74.50
CONCRETE (yds.^{3})	0.15	0.31	0.71	1.51	3.29	5.07	7.23
H (ft.)	1.6	2.4	3.1	4.5	6.0	7.4	8.8
W (ft.)	1.6	2.4	3.1	4.5	6.0	7.4	8.8
X (ft.)	1.5 Min.	1.5 Min.	2.0 Min.	2.0 Min.	2.5 Min.	2.5 Min.	2.5 Min.

NOTES:
1. Concrete shall be kept at sufficient distance from joint for removal of all joint accessories including bolts.
2. All bearing surfaces to be carried to undisturbed soil.
3. This table shows the minimum size thrust blocks for soil bearing pressure of 2000 psf and an internal pressure of 190 psi. Cover to T.O.P. is 3 feet for 12" and smaller mains; 4 feet for 16" and larger mains.
4. Poor and wet soil (silty soils, clay, muck and peat) will require larger thrust blocks, as directed by the Engineer.
5. Fittings shall be completely polywrapped prior to pouring thrust blocks.

*6. Closest distance to valve for deadman to remain effective.

TAMPA WATER DEPARTMENT	APPROVED Sept. 2011	REVISED	DEADMAN THRUST BLOCK	2.12A

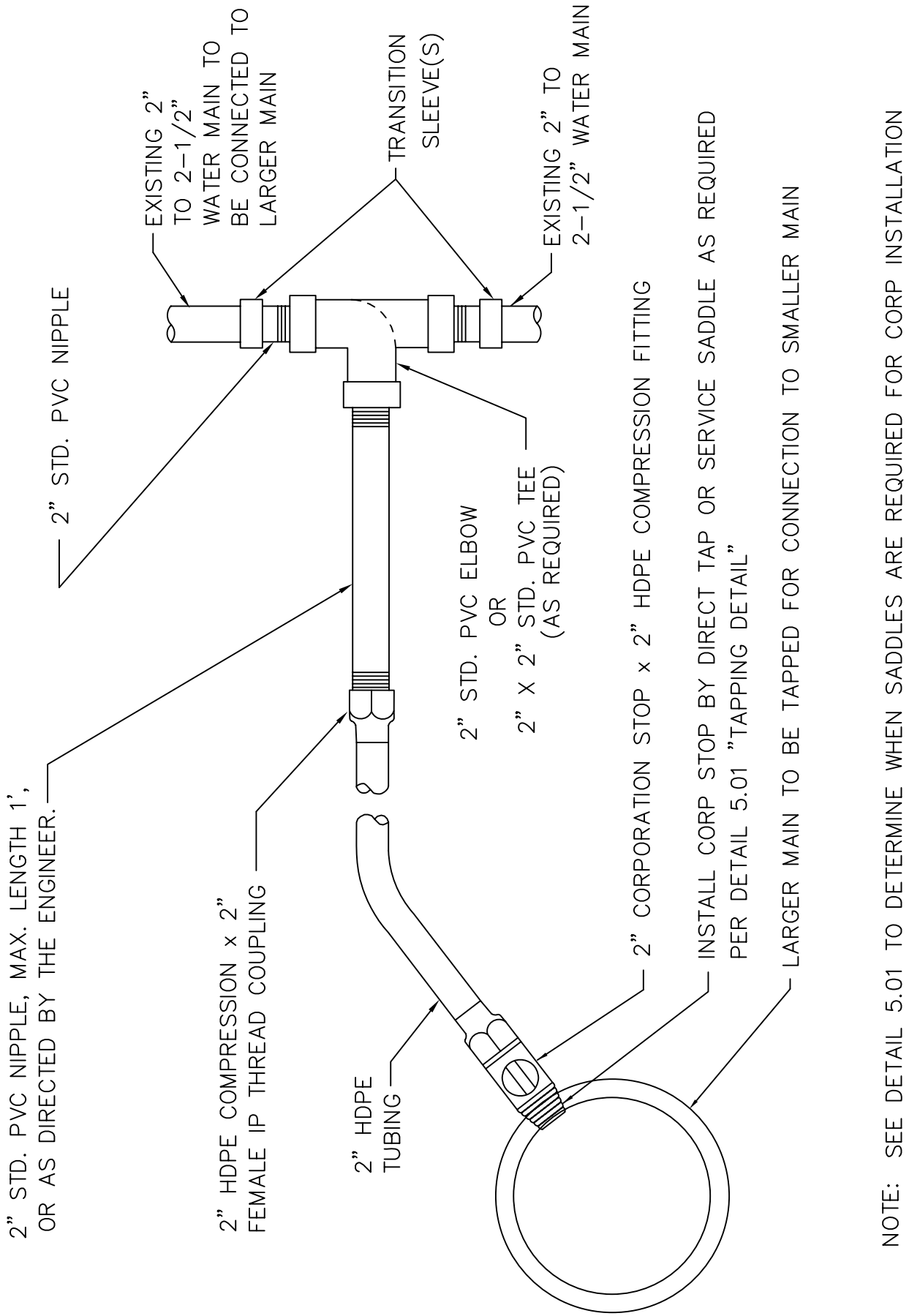

NOTE: SEE DETAIL 5.01 TO DETERMINE WHEN SADDLES ARE REQUIRED FOR CORP INSTALLATION

TAMPA WATER DEPARTMENT	APPROVED Sept. 2011	REVISED	"TAPPED" CONNECTION FROM DI,CI, OR PVC PIPE TO <4" WATER MAINS	2.13

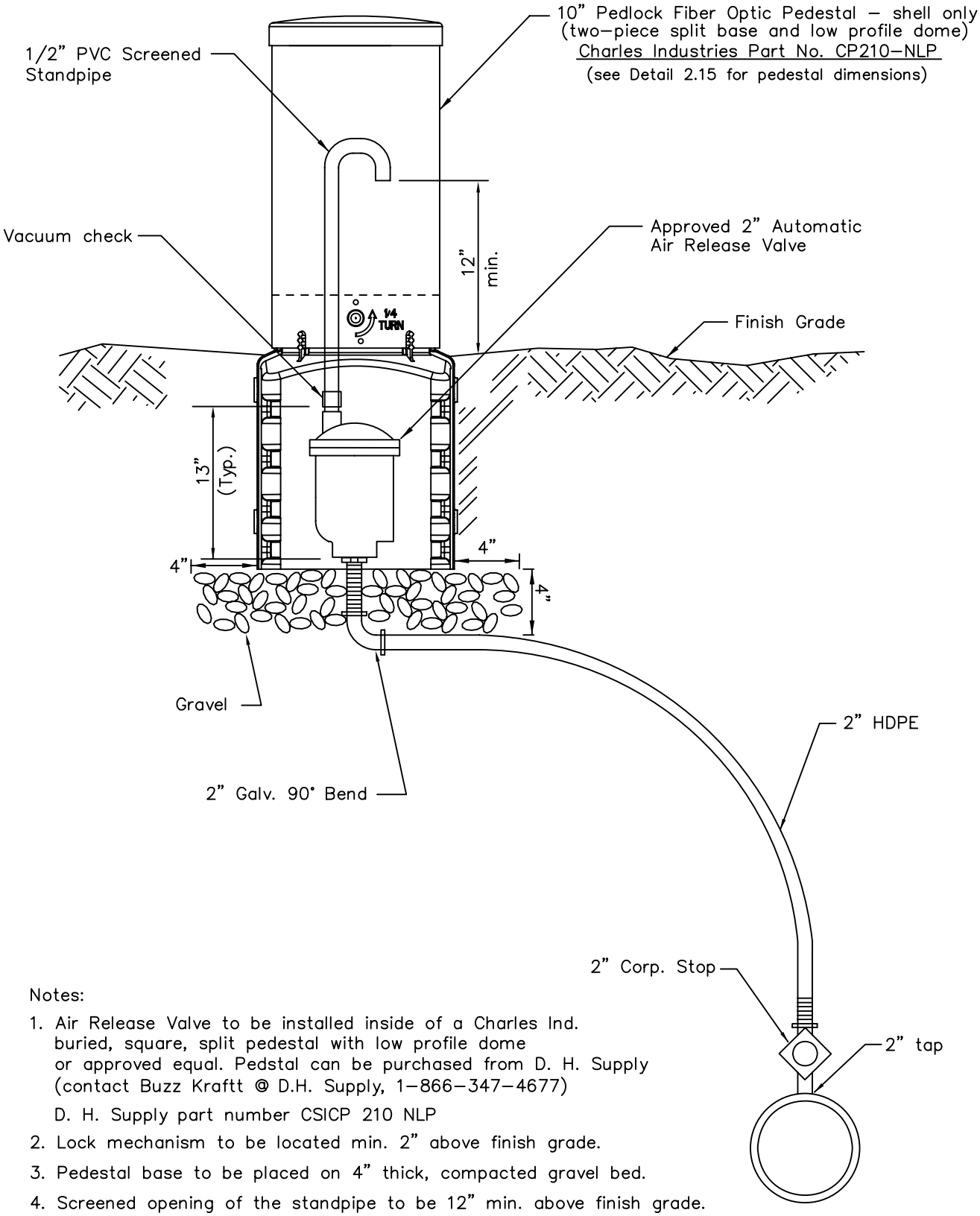

Notes:

1. Air Release Valve to be installed inside of a Charles Ind. buried, square, split pedestal with low profile dome or approved equal. Pedstal can be purchased from D. H. Supply (contact Buzz Kraftt @ D.H. Supply, 1–866–347–4677)

   D. H. Supply part number CSICP 210 NLP
2. Lock mechanism to be located min. 2" above finish grade.
3. Pedestal base to be placed on 4" thick, compacted gravel bed.
4. Screened opening of the standpipe to be 12" min. above finish grade.

TAMPA WATER DEPARTMENT	APPROVED Sept. 2011	REVISED	AUTOMATIC AIR RELEASE VALVE	2.14

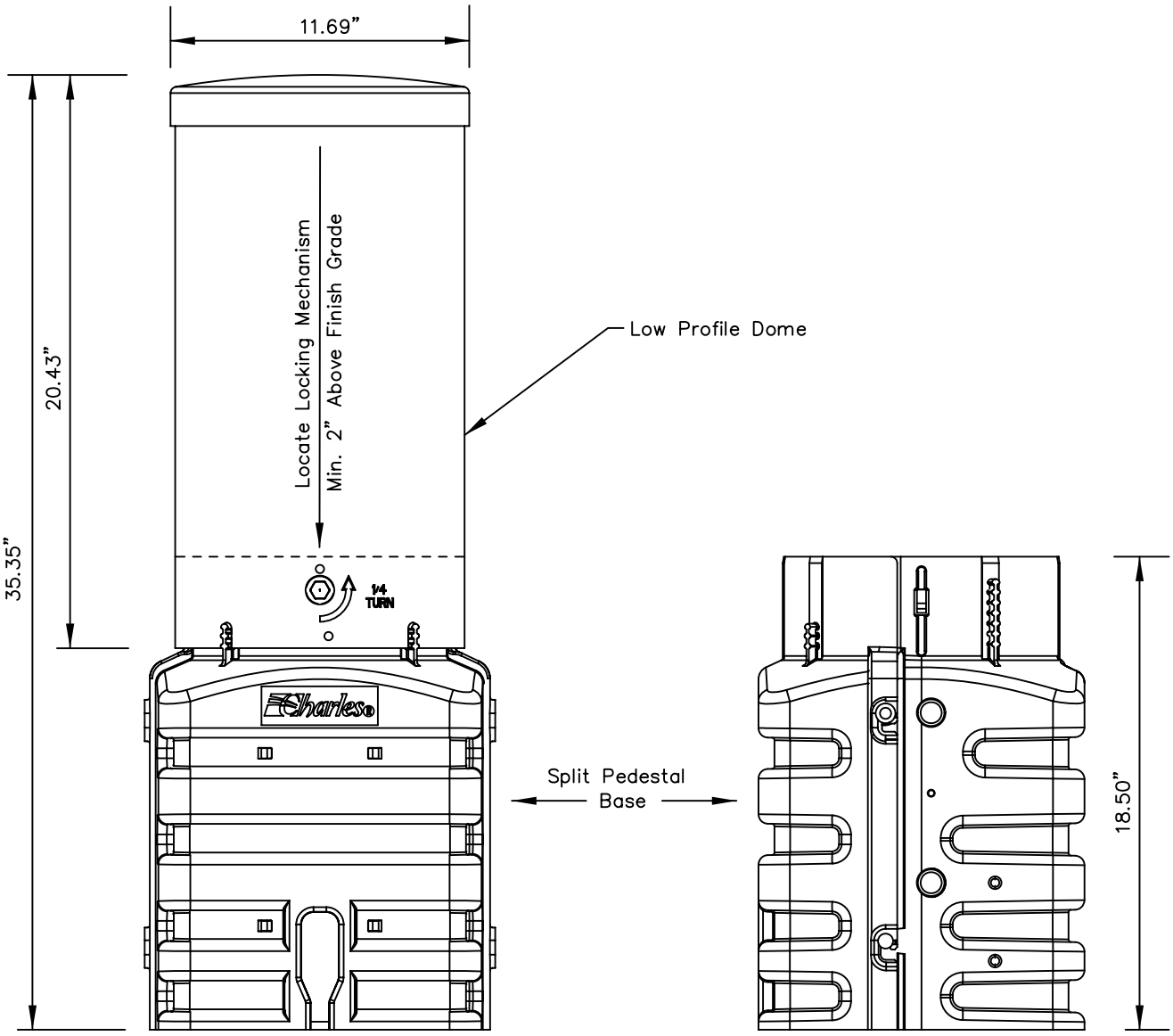

BASE, ROTATED 90°

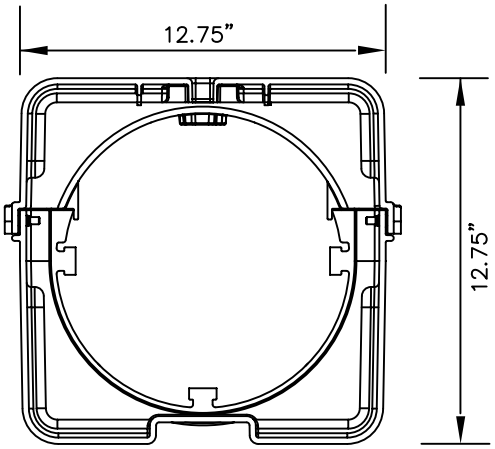

PEDESTAL ASSEMBLY

TAMPA WATER DEPARTMENT	APPROVED Sept. 2011	REVISED	PEDESTAL FOR AUTOMATIC AIR RELEASE VALVE	2.15

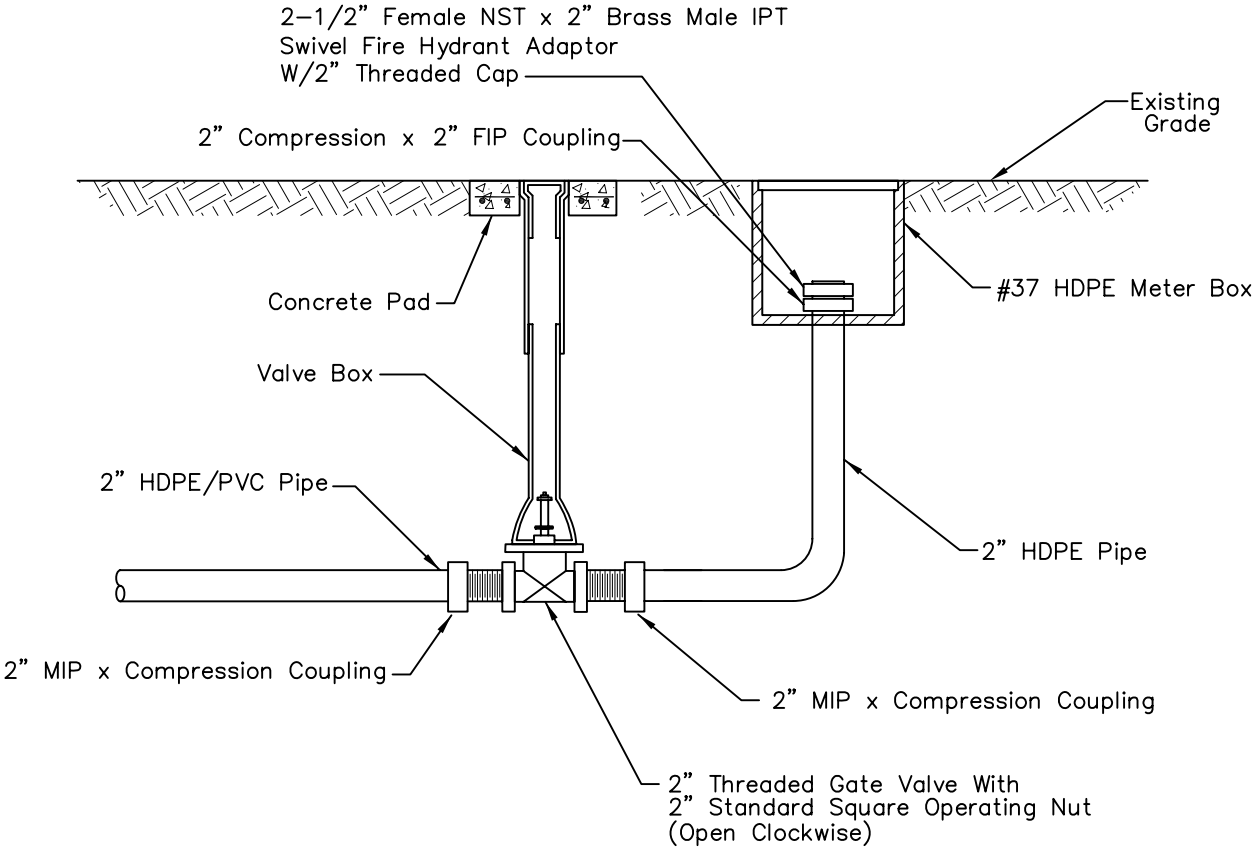

BLOW-OFF FOR 2" MAINS

No galvanized pipes or fittings allowed
Schedule 80 PVC Allowed

N.T.S.

TAMPA WATER DEPARTMENT	APPROVED Sept. 2011	REVISED	BLOW–OFF VALVE ASSEMBLY W/2" PVC OR HDPE PIPE	2.16

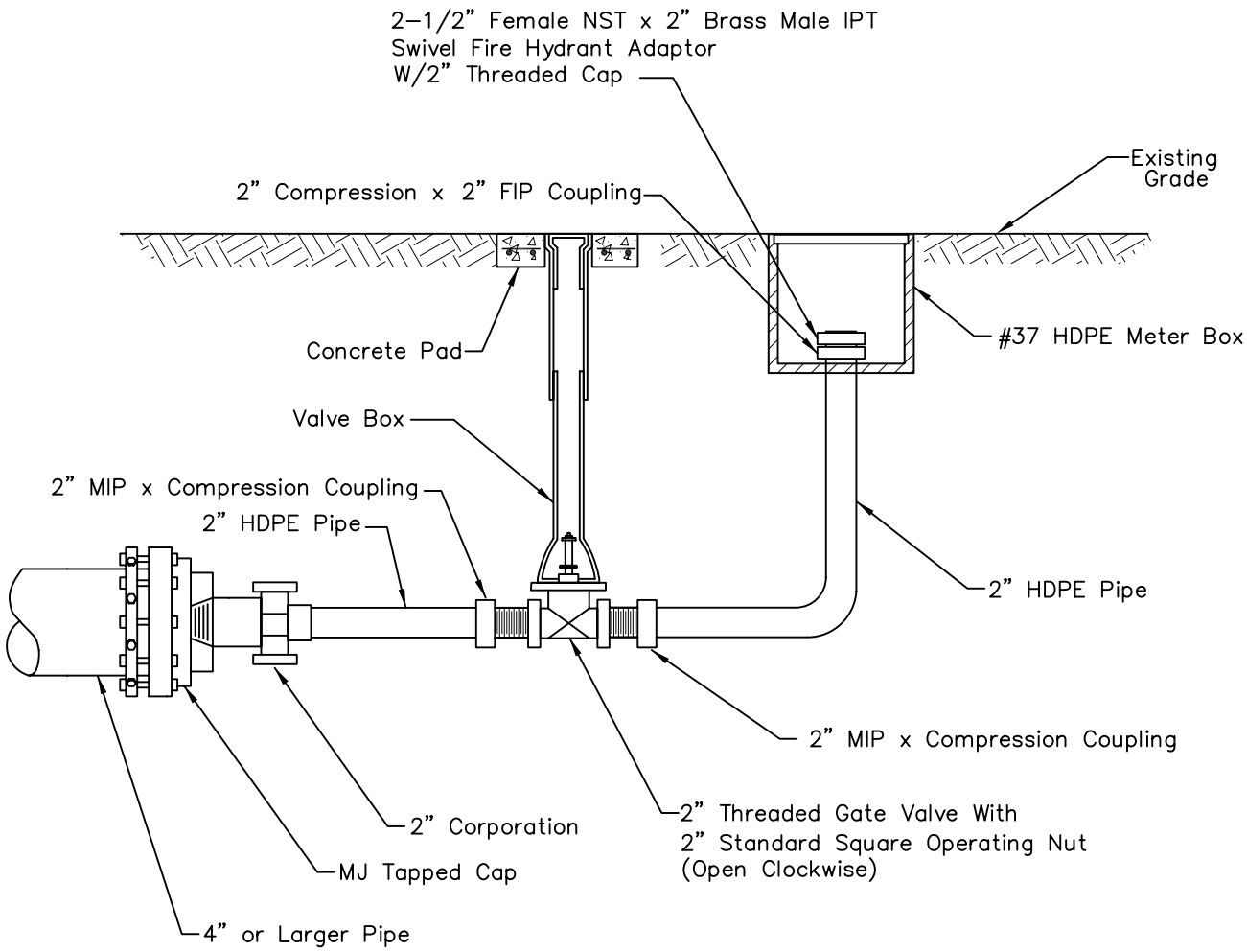

BLOW-OFF FOR ≥ 4" MAINS

No galvanized pipes or fittings allowed
Schedule 80 PVC Allowed

N.T.S.

TAMPA WATER DEPARTMENT	APPROVED Sept. 2011	REVISED	BLOW–OFF VALVE ASSEMBLY FOR ≥4" MAINS W/DI, CI OR PVC PIPE	2.17

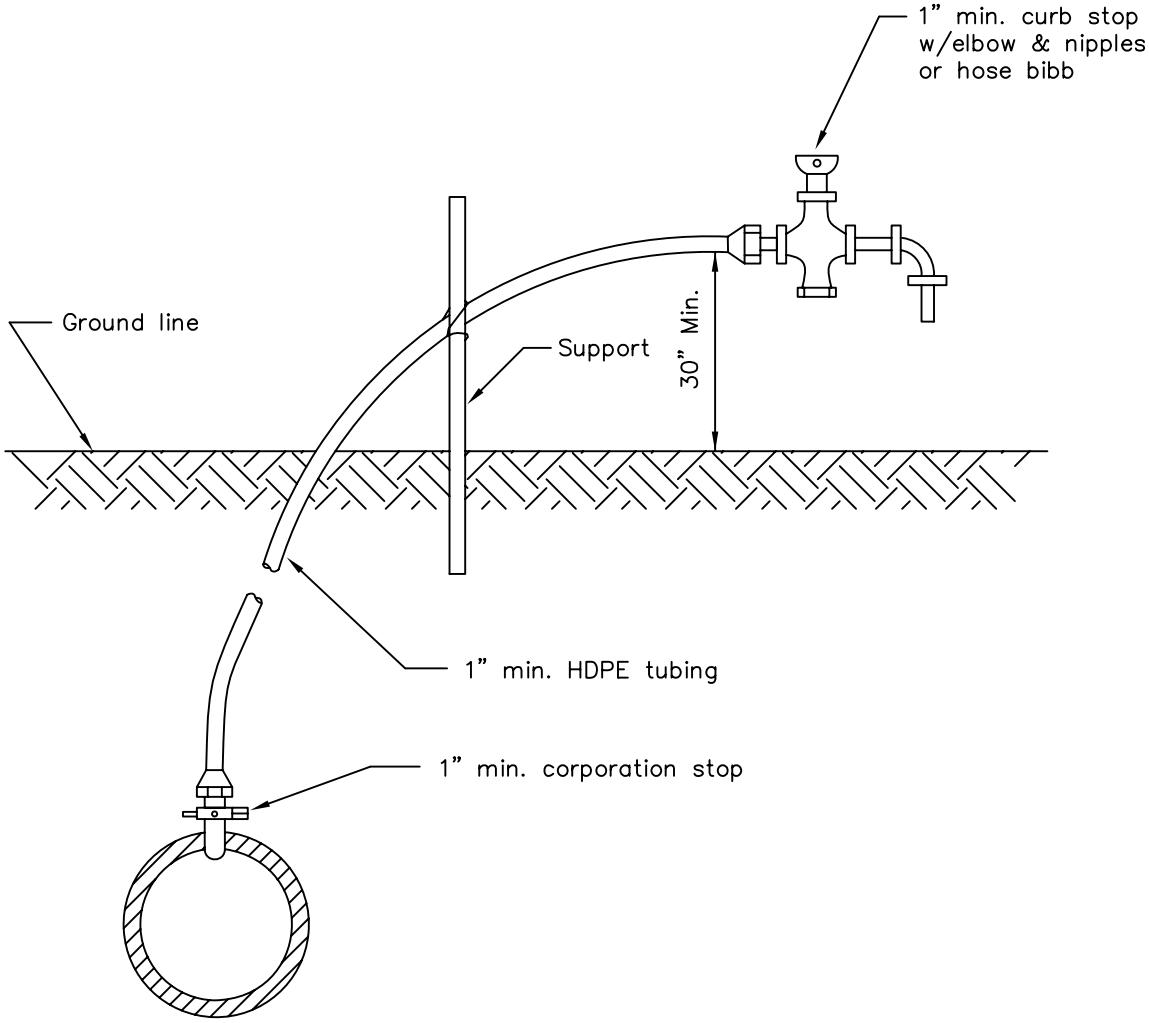

Notes:

1. Water outlet shall be held up off the ground so as not to interfere with the sampling process.

2. Corporation stop to be removed and brass plug installed in tapped main after operation.

TAMPA WATER DEPARTMENT	APPROVED Sept. 2011	REVISED	TEMPORARY SAMPLE TAP INSTALLATION w/DI, CI, OR PVC PIPE	2.18

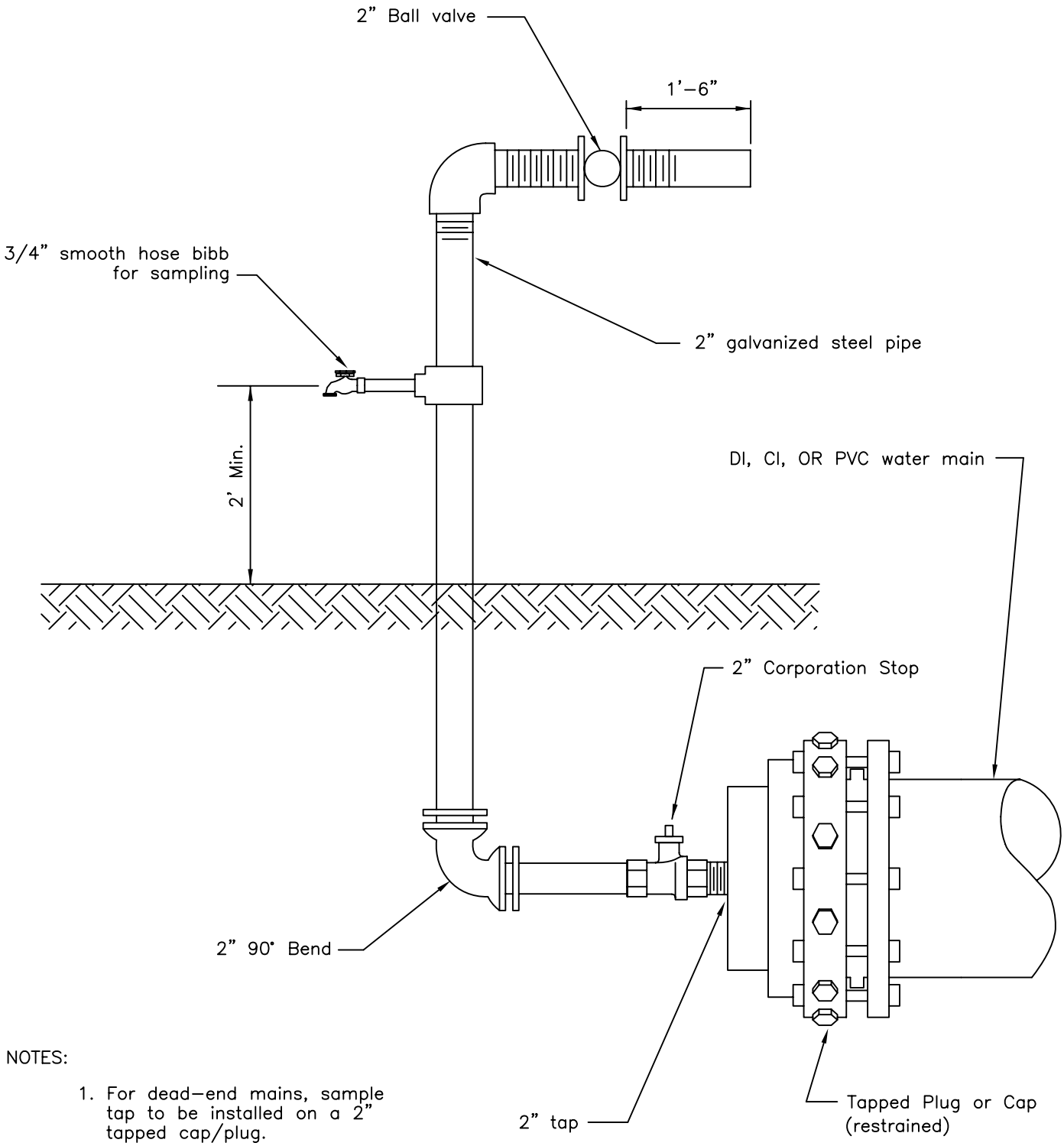

NOTES:

1. For dead-end mains, sample tap to be installed on a 2" tapped cap/plug.
2. Flushing/sampling arrangement to be removed after disinfection of main line.
3. After operation complete, install brass plug at corporation stop.

TAMPA WATER DEPARTMENT	APPROVED Sept. 2011	REVISED	TEMPORARY SAMPLE TAP INSTALLATION FOR END OF LINE W/DI, CI, OR PVC PIPE	2.19

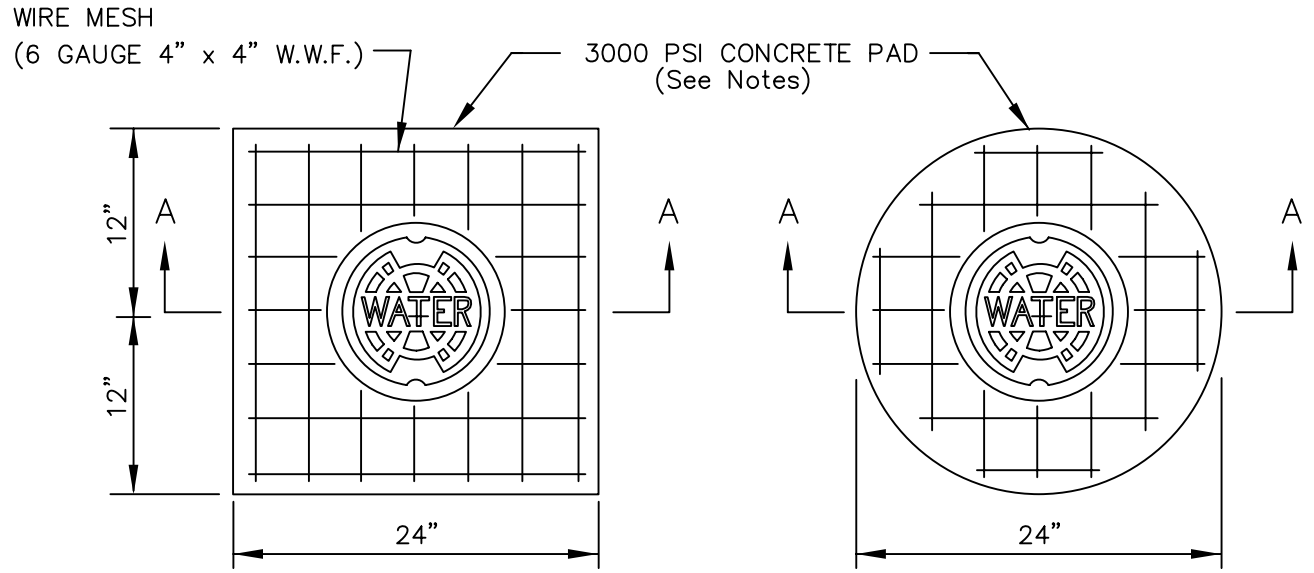

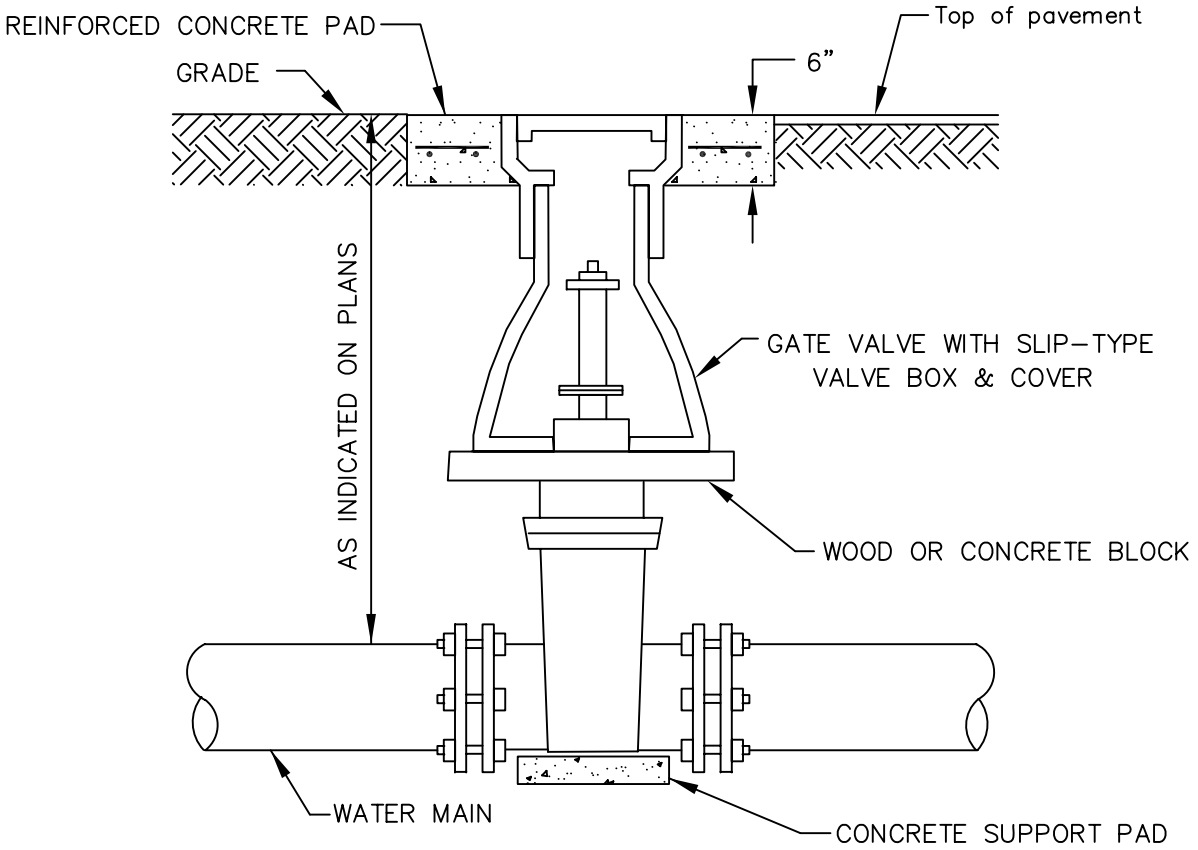

SECTION A–A

N.T.S.

Notes :

1. Circular or square concrete pad required for all valve box installations.
2. Cast iron valve boxes shall be firmly supported and centered and plumb over the operating nut of the valve. Valve box cover shall be flush with the surface of the finished pavement, or grade or at such other level as may be directed by the Department.
3. "Blue" Water Valve locate markers required for all valve installations.

TAMPA WATER DEPARTMENT	APPROVED Sept. 2011	REVISED	VALVE INSTALLATION W/VALVE BOX & PAD FOR DI OR CI PIPE	3.01

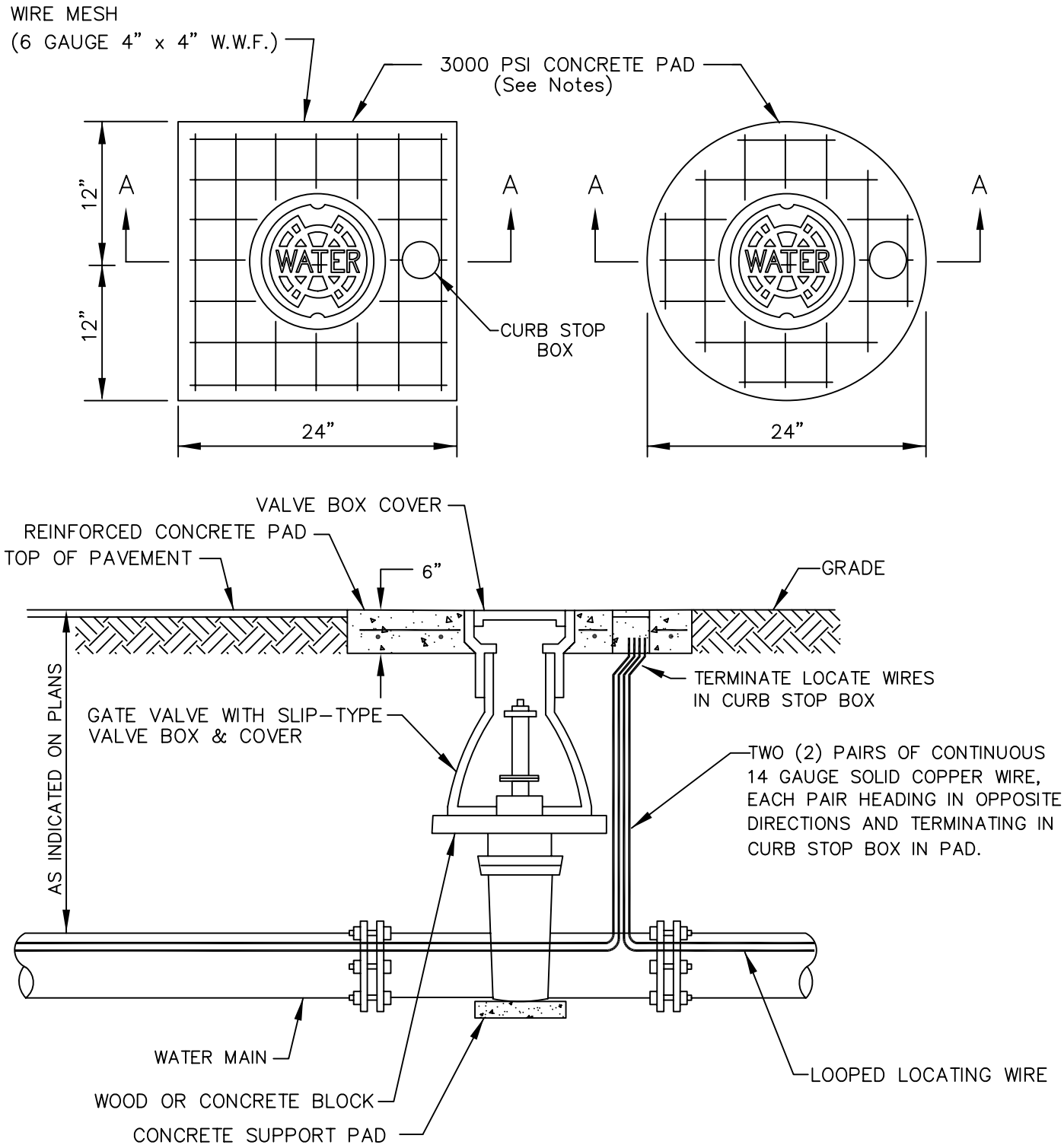

SECTION A–A

N.T.S.

Notes :

1. Circular or square concrete pad required for all valve box installations.
2. Cast iron valve boxes shall be firmly supported and centered and plumb over the operating nut of the valve. Valve box cover shall be flush with the surface of finished pavement or grade or at such other level as may be directed by the Department.
3. "Blue" Water Valve locate markers required for all valve installations.

TAMPA WATER DEPARTMENT	APPROVED Sept. 2011	REVISED	VALVE INSTALLATION W/VALVE BOX & PAD FOR PLASTIC PIPE	3.02

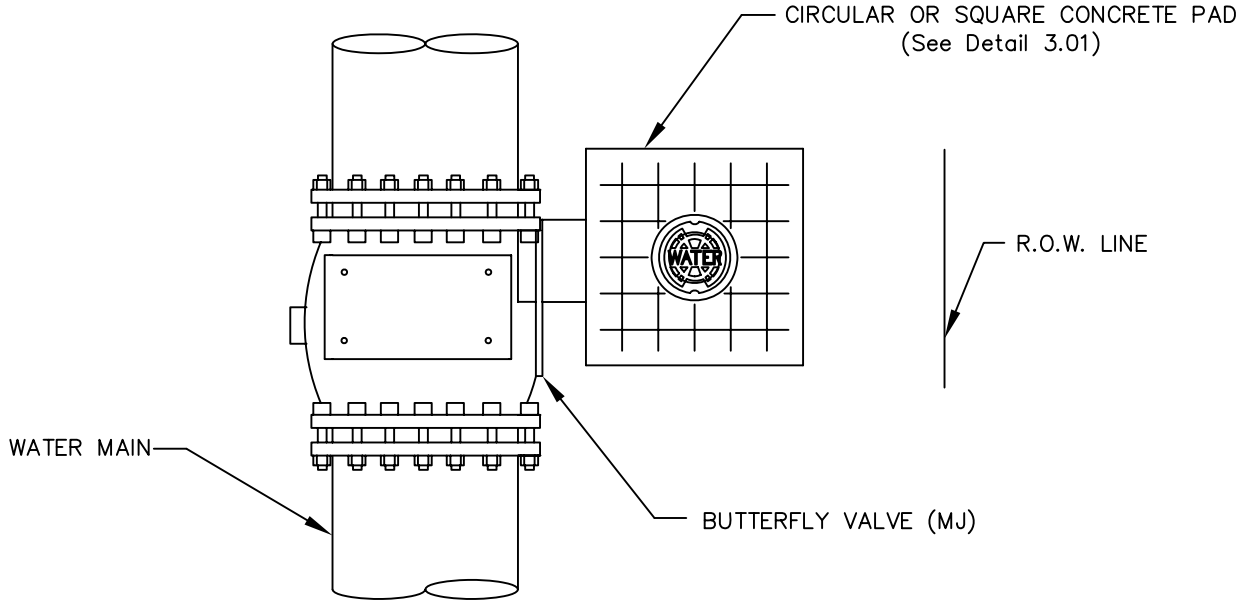

PLAN

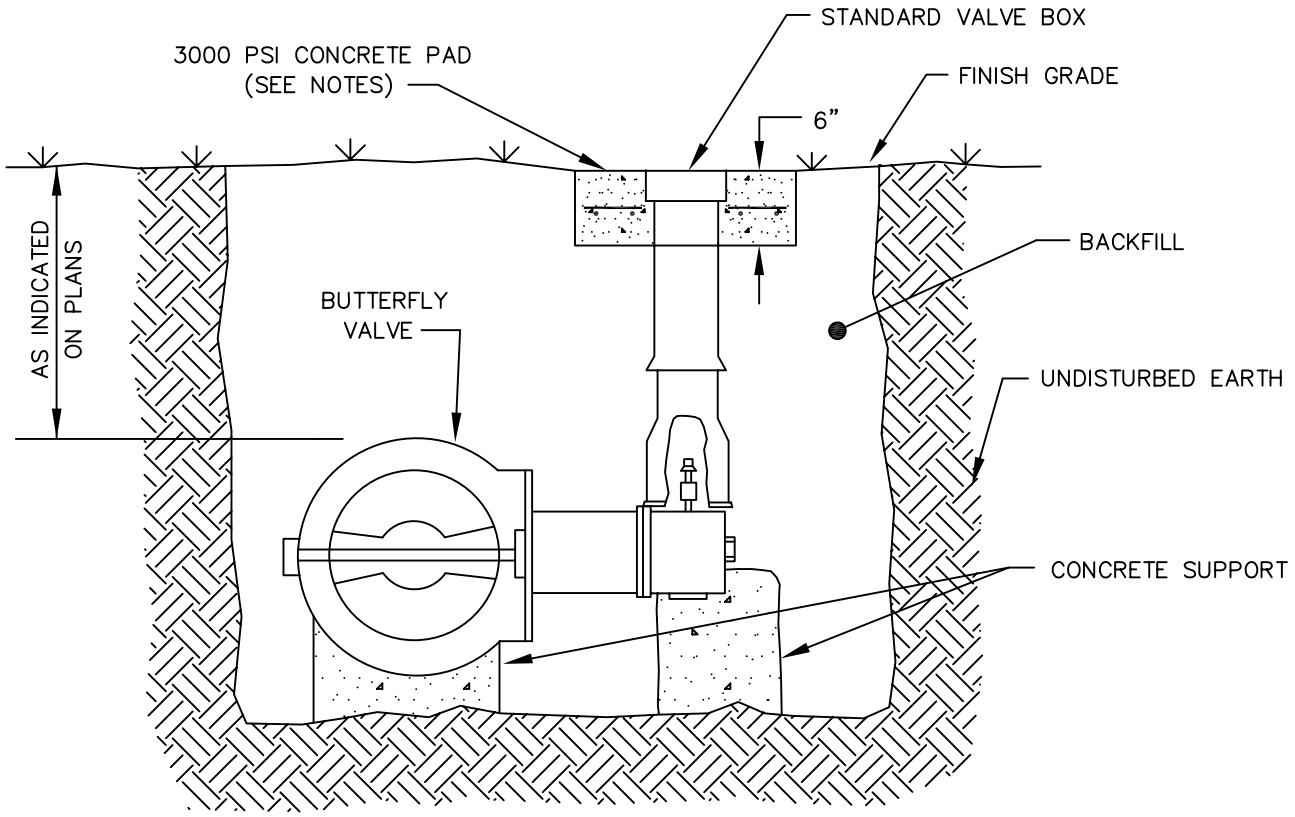

SECTION

Notes:

1. Circular or Square concrete pads for valve box and concrete supports as specified in detail above shall be furnished with all butterfly valve installations.
2. Orient valve so operator is located on the side of the pipe nearest the right-of-way line.

TAMPA WATER DEPARTMENT	APPROVED Sept. 2011	REVISED	BUTTERFLY VALVE INSTALLATION W/VALVE BOX & PAD	3.03

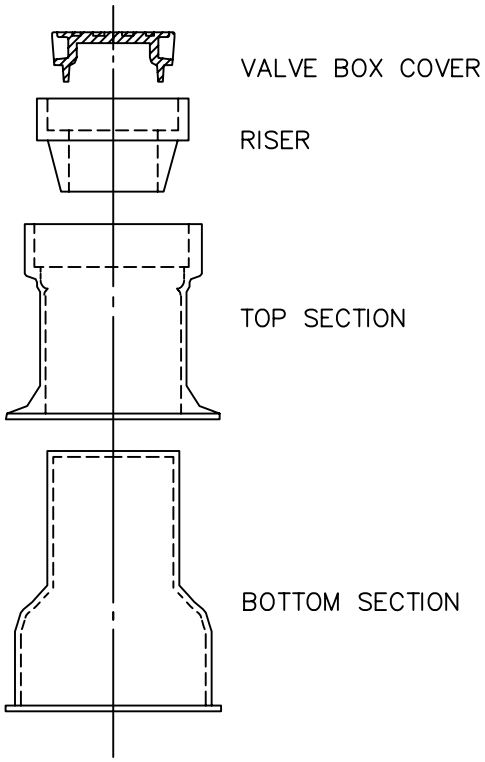

VALVE BOX ASSEMBLY

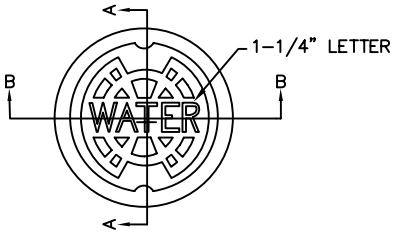

PLAN

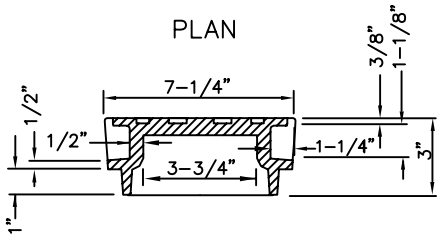

SECTION A–A

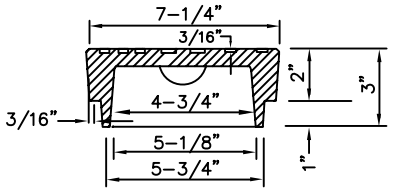

SECTION B–B

VALVE BOX COVER

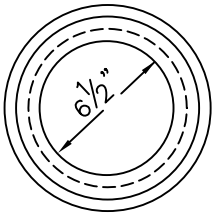

PLAN

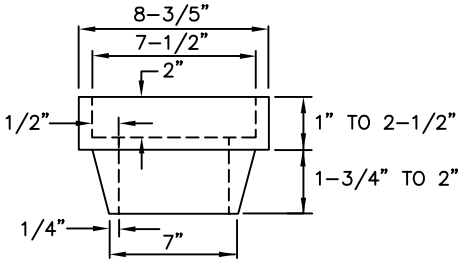

SIDE VIEW

RISER

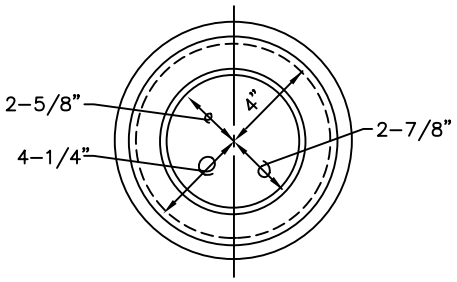

PLAN

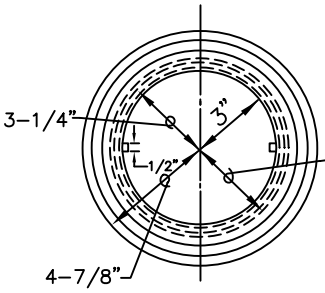

PLAN

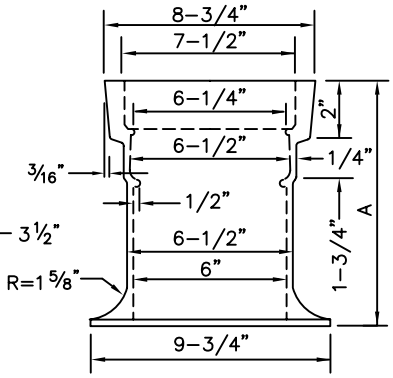

SIDE VIEW

TOP SECTION

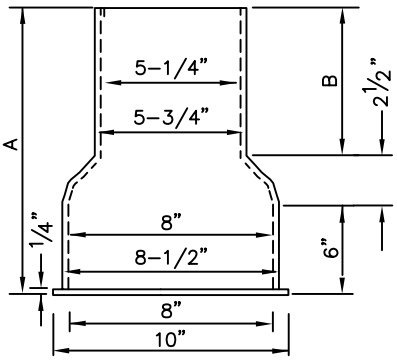

SIDE VIEW

BOTTOM SECTION

TOP SECTION	SIZE	A
	10"	10"
	16"	16"

BOTTOM SECTION	SIZE	A	B
	15"	15"	6-1/2"
	24"	24"	15-1/2"
	36"	36"	27-1/2"

TAMPA WATER DEPARTMENT	APPROVED Sept. 2011	REVISED	VALVE BOX, SLIP-TYPE	3.04

PROTECTING EX. VALVE BOX LOCATION DURING CLEARING & GRUBBING

Install 4" x 6" PVC Pipe in existing valve box to identify valve location box.

PIPE MUST BE VISIBLE TO EQUIPMENT OPERATORS

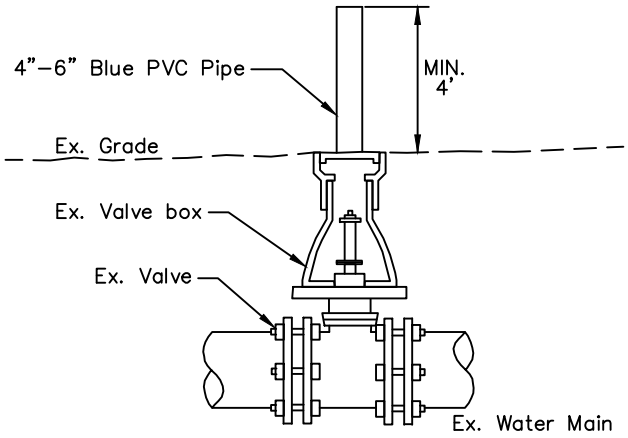

ADJUSTING VALVE BOX HEIGHT FOR CHANGED GRADE

Install Valve Box Risers as required for valve box cover to be flush with new grade.

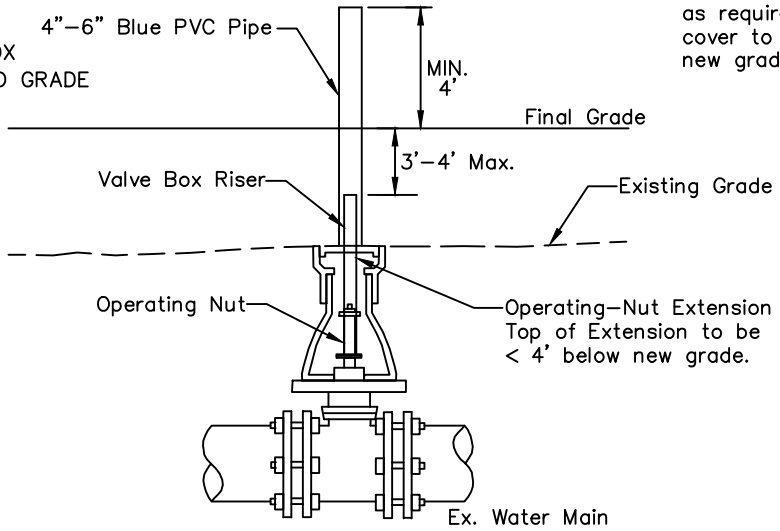

REINSTALL VALVE COVER & PAD

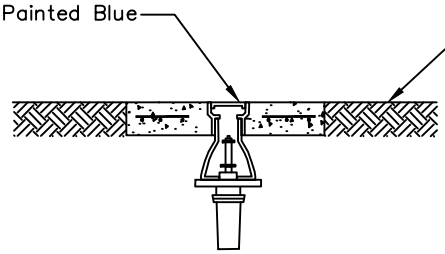

NOTES:

1. MATERIALS FOR & INSTALLATION OF VALVE BOXES & PADS SHALL CONFORM TO TAMPA WATER DEPT. STANDARDS & CONSTRUCTION DETAILS (DETAILS 3.01 & 3.03)

TAMPA WATER DEPARTMENT	APPROVED	REVISED	VALVE BOX ADJUSTMENTS FOR GRADE CHANGE	3.05
	Dec. 2011			

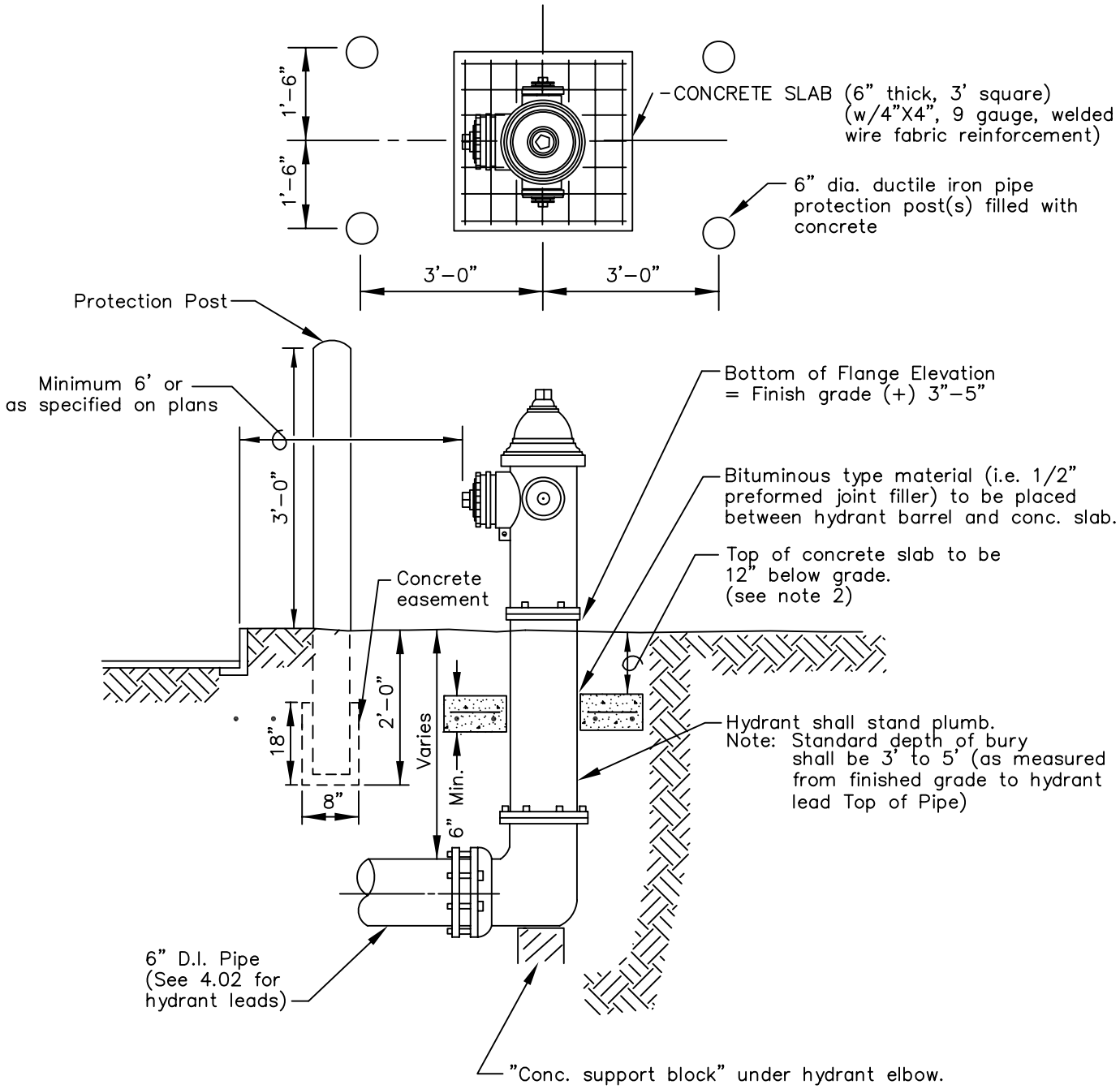

NOTES:

1. Fire hydrant barrel above the ground line shall be painted with a high-grade enamel paint, Federal Safety yellow (OSHA approved), and the hydrant bonnet shall be painted OSHA green.
2. Concrete slab may be eliminated in areas where hydrant is set in sidewalk and sidewalk has been installed prior to final acceptance of the hydrant.
3. Thrust restraint for hydrant:
   a) hydrant shall be firmly supported under elbow in all methods by support block
   b) all backfill shall be thoroughly compacted under support block and under thrust collar
   c) all hydrant leads shall be restrained by Megalugs or equivalent mechanical restraints
4. Protection posts are required when hydrant is less than 6 feet from edge of pavement, or as directed by the Engineer.
5. For PVC mains, install concrete support block under all hydrant tees.

TAMPA WATER DEPARTMENT	APPROVED Sept. 2011	REVISED	FIRE HYDRANT INSTALLATION	4.01

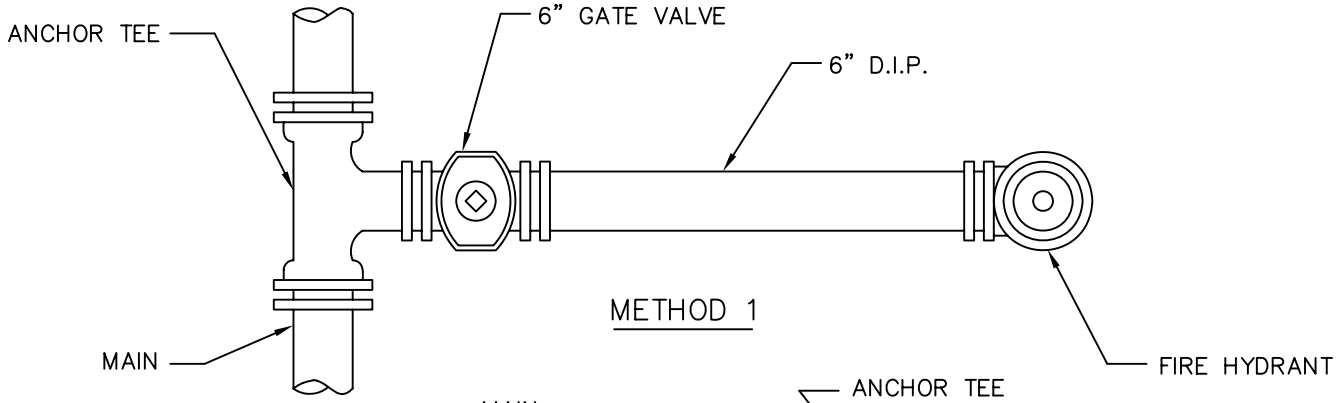

METHOD 1

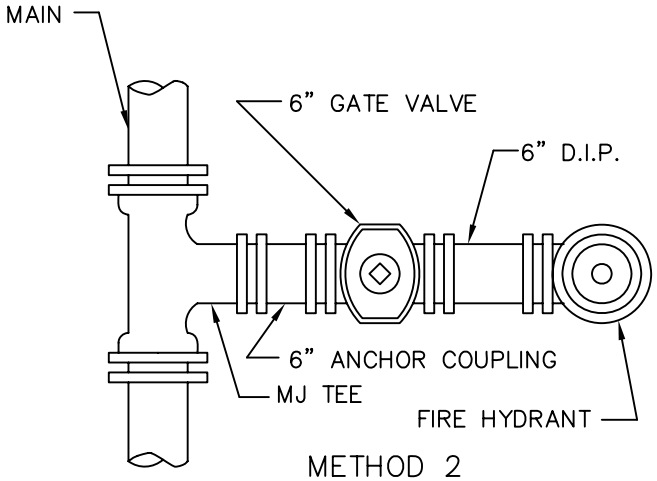

METHOD 2

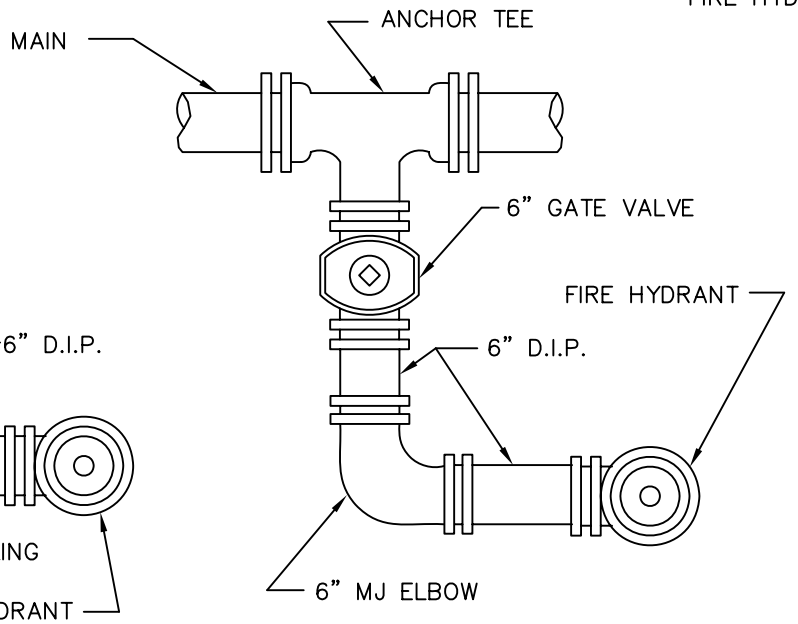

METHOD 3

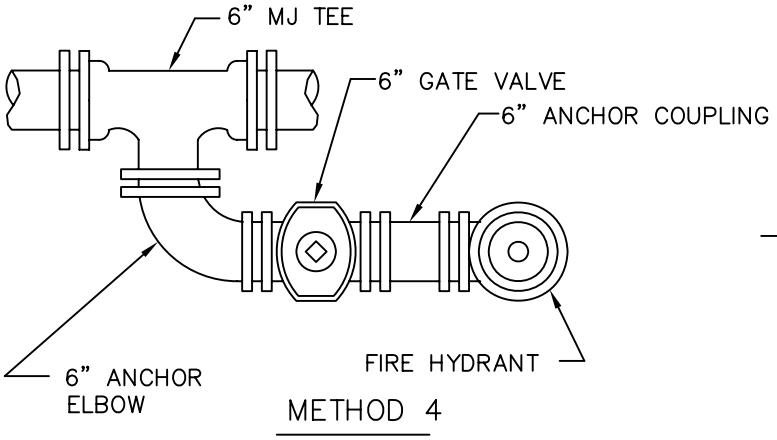

METHOD 4

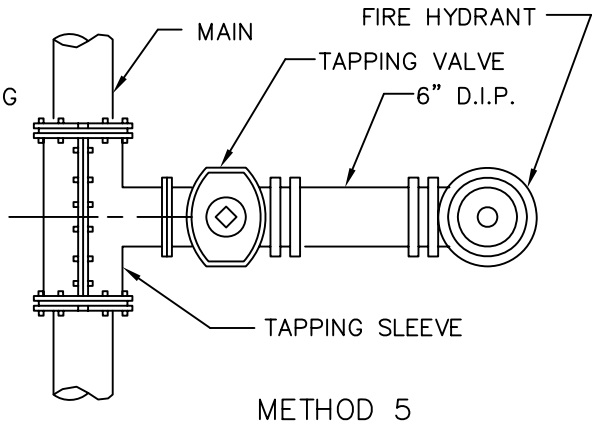

METHOD 5

1. Valve shall be set in accordance with Detail 3.01. For hydrant set, see Detail 4.01.
2. All valves shall be anchored to branch of tee on all hydrant installlations.
3. All hydrant leads shall be restrained by Megalugs or equivalent.
4. For PVC mains, install concrete support block under hydrant tees.

TAMPA WATER DEPARTMENT	APPROVED Sept. 2011	REVISED	FIRE HYDRANT METHODS OF INSTALLATION	4.02

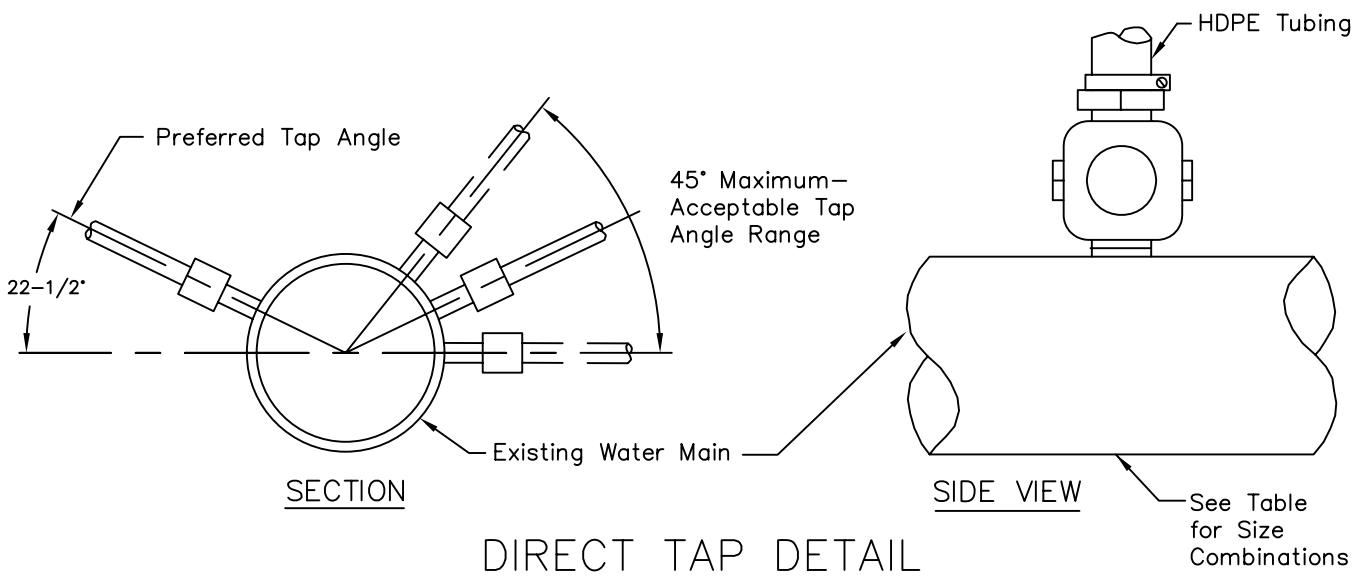

DIRECT TAP DETAIL

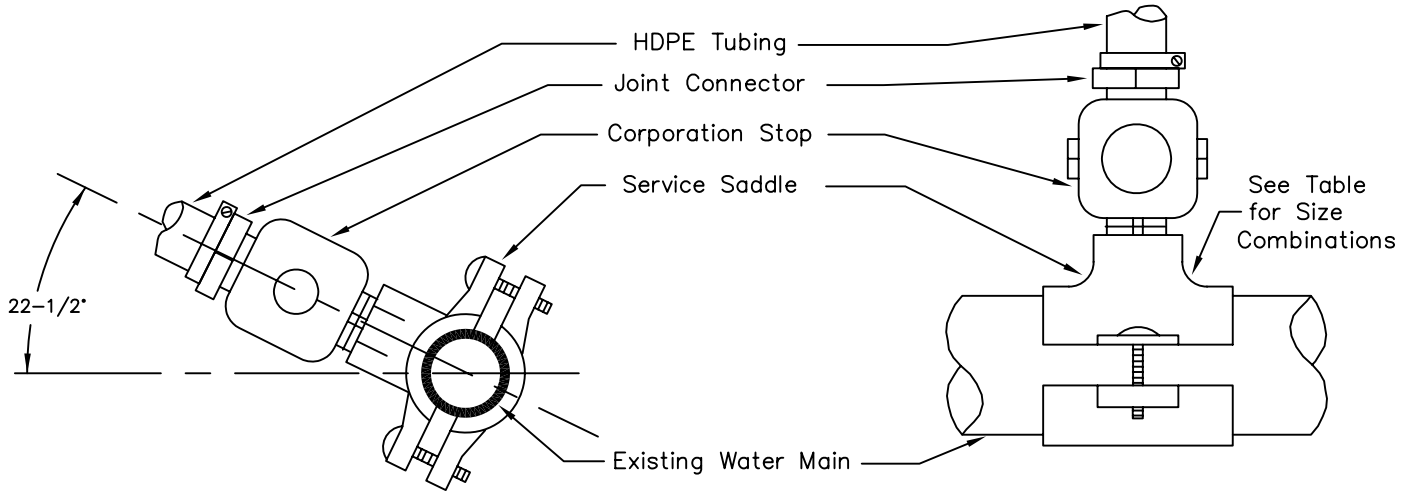

SADDLE TAP DETAIL

PIPE	SIZE	CORPORATION TAP SIZE	
		1"	2"
DI/CI	12"	DT	DT
	8"	DT	SS
	6"	DT	SS
	4"	SS	SS
PVC	2",2–1/2"	SS	NA
	8" C–900	SS	SS
	6" C–900	SS	SS
	2"–SDR21	SS	NA
OTHER*	12"	SS	SS
	10"	SS	SS
	8"	SS	SS
	6"	SS	SS
	4"	SS	NA
	3"	SS	NA
	2",2–1/2"	SS	NA

LEGEND

DT– Direct Tap Can be Allowed
SS– Service Saddle is Required
NA– Not Allowed
*Asbestos Cement, Steel, Galvanized Iron Pipe, Non Std PVC, etc.

TAMPA WATER DEPARTMENT	APPROVED Sept. 2011	REVISED	TAPPING DETAIL FOR 3/4", 1", 1–1/2" & 2" W/DI, CI, OR PVC PIPE	5.01

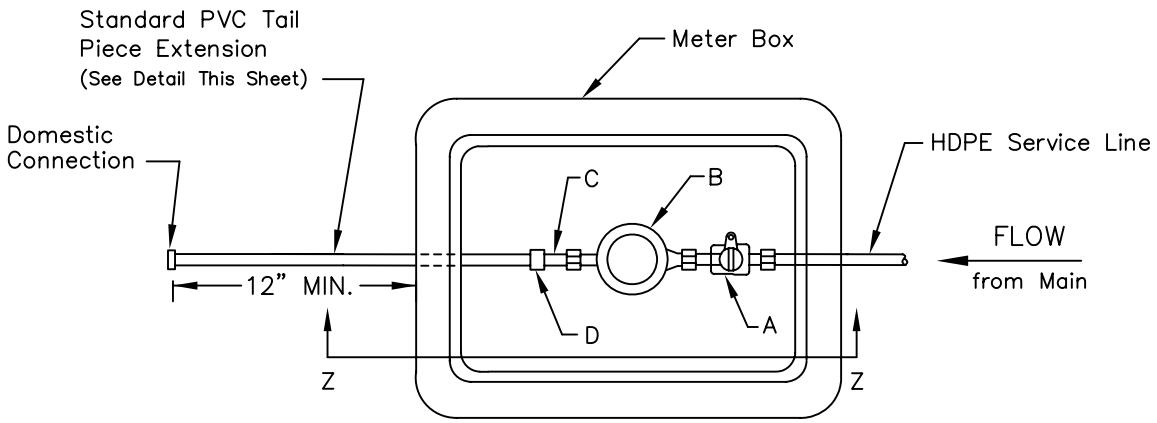

PLAN VIEW

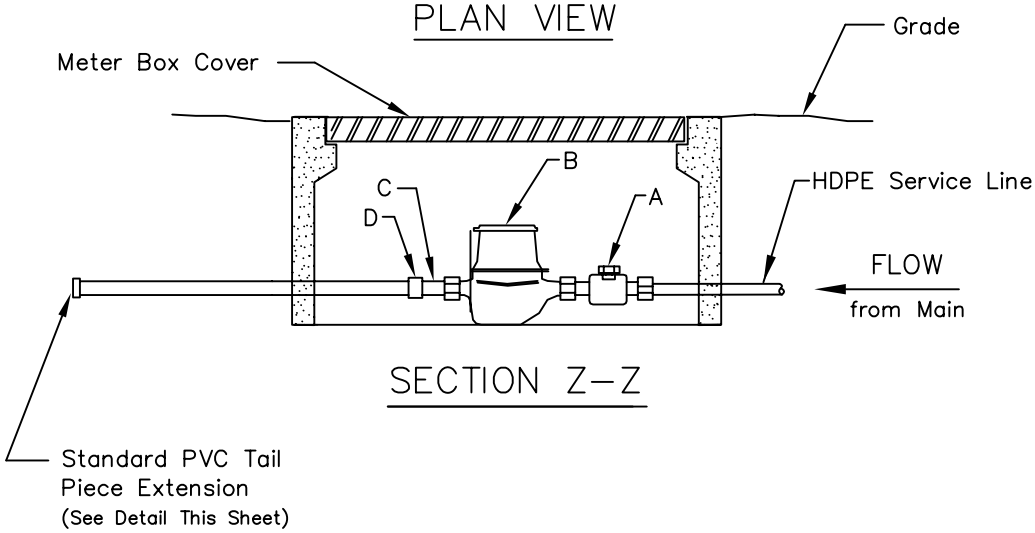

SECTION Z–Z

METER INSTALLATION
–PARTS LIST–

ITEM	DESCRIPTION
A	HDPE CJ X METER, SWIVEL NUT (CURB STOP)
B	METER
C	BRASS METER COUPLING
D	*PVC FIP X WELD COUPLING

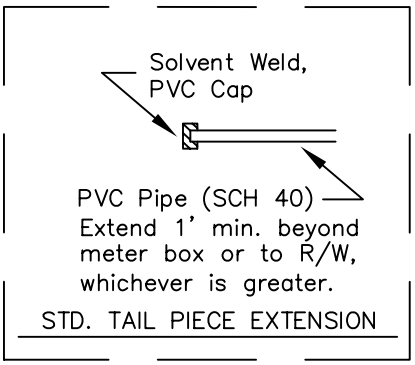

* All PVC pipe and fittings shall be SCH 80 except for standard tail piece section which will be SCH 40.

NOTE: Parts list is for standard installation; actual parts required may vary as directed by the Engineer.

TAMPA WATER DEPARTMENT	APPROVED Sept. 2011	REVISED	SINGLE METER SET DETAIL 3/4", 1", 1–1/2", 2"	5.02

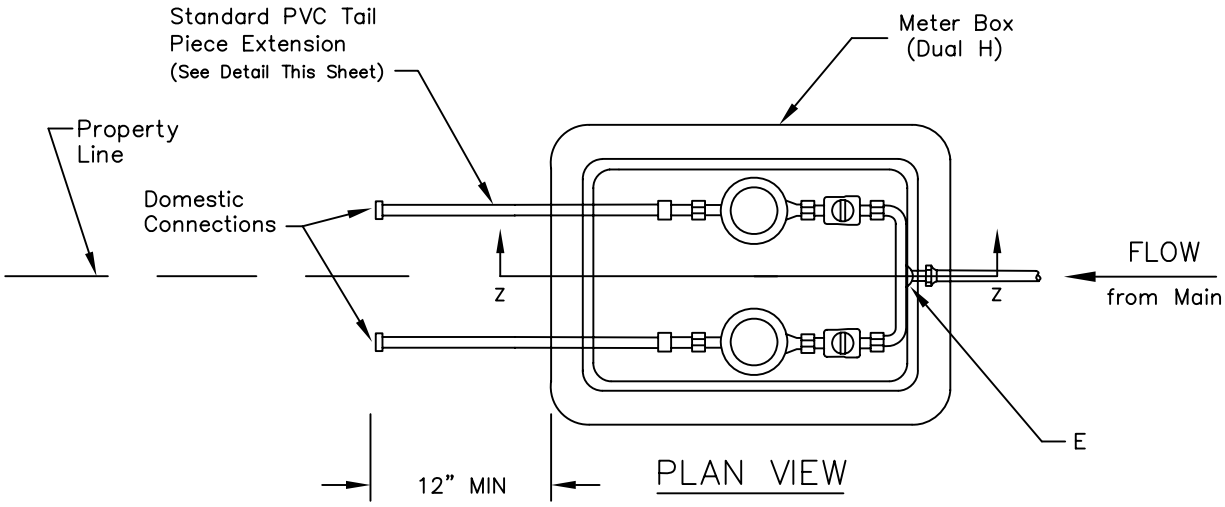

PLAN VIEW

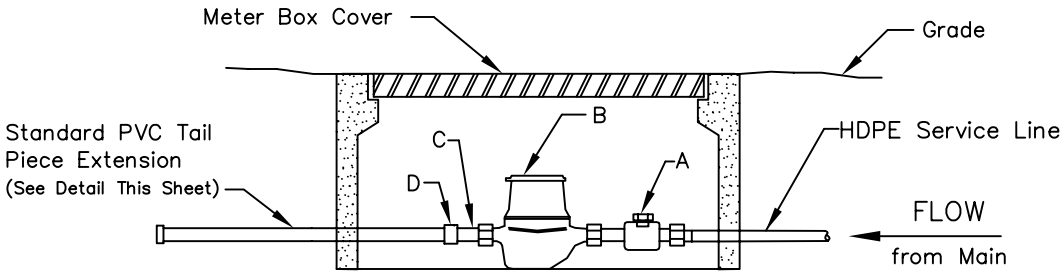

SECTION Z–Z

METER INSTALLATION

–PARTS LIST–

ITEM	DESCRIPTION
A	FIP CURB X METER SWIVEL NUT (CURB STOP)
B	METER
C	METER COUPLING
D	*PVC FIP X WELD COUPLING
E	MIP X HDPE CJ BRANCH COUPLING

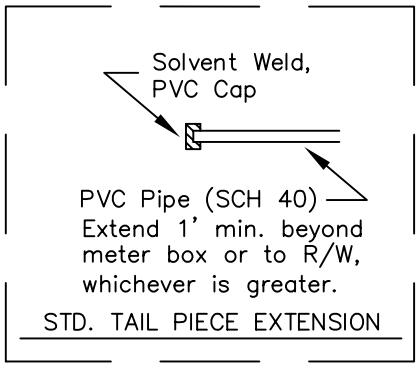

STD. TAIL PIECE EXTENSION

* All PVC pipe and fittings shall be SCH 80 Except for standard tail piece section which will be SCH 40.

NOTE: Parts list is for standard installation; actual parts required may vary as directed by the Engineer.

TAMPA WATER DEPARTMENT	APPROVED	REVISED	DUAL METER SET DETAIL 3/4" & 1"	5.03
	Sept. 2011			

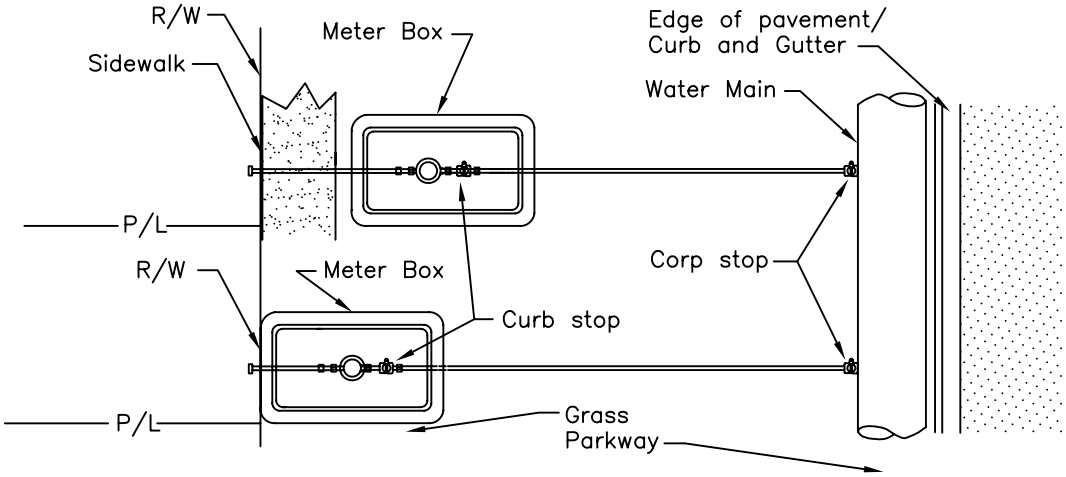

PLAN – SINGLE METER

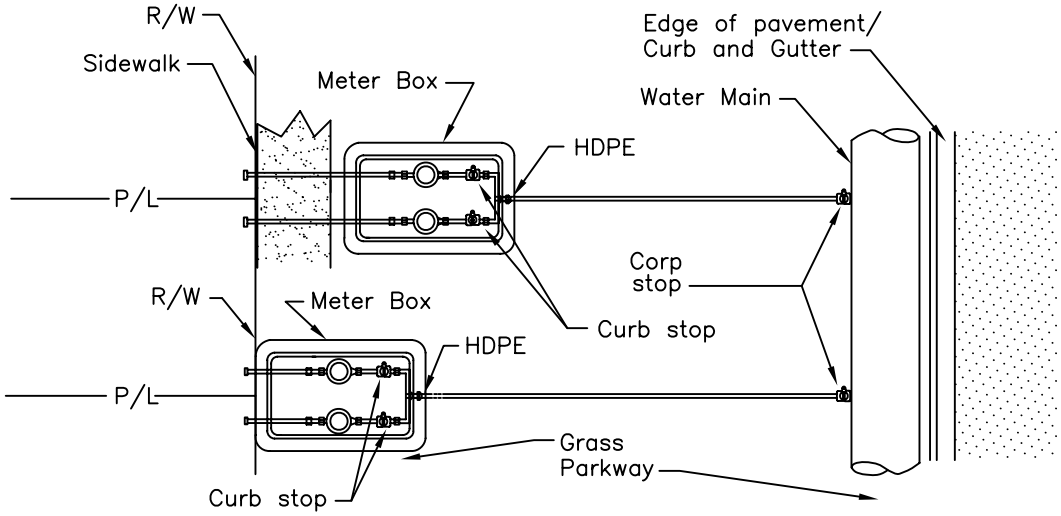

PLAN VIEW – DUAL METER

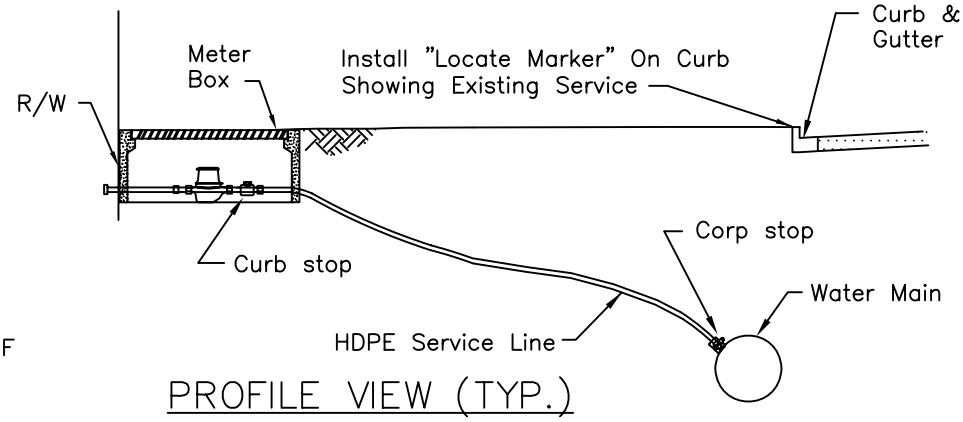

PROFILE VIEW (TYP.)

DO NOT INSTALL METER WITHIN SIDEWALK. WHEN SIDEWALK EXISTS, INSTALL METER ON STREET SIDE OF SIDEWALK OR WHERE DIRECTED BY ENGINEER.

* Line size applicable for DDCVA

SINGLE METER SIZE (inches)	SERVICE LINE SIZE (inches) (0–15')
3/4	1
1	1
1–1/2	2
2*	2

DUAL METER SIZE (inches)	SERVICE LINE SIZE (inches) (0–15')
3/4	2
1	2
1–1/2	n/a
2	n/a

(Feet refer to distance from water main to meter)

TAMPA WATER DEPARTMENT	APPROVED Sept. 2011	REVISED	SINGLE & DUAL METERED SERVICE – SHORT SIDE 3/4", 1", 1–1/2" AND 2"	5.04

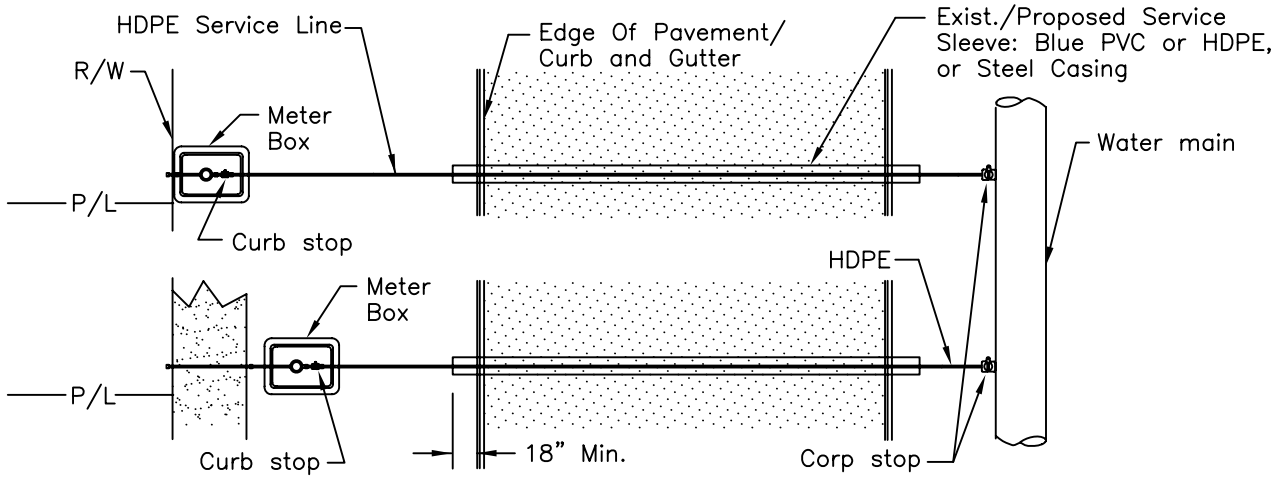

PLAN VIEW – SINGLE METER

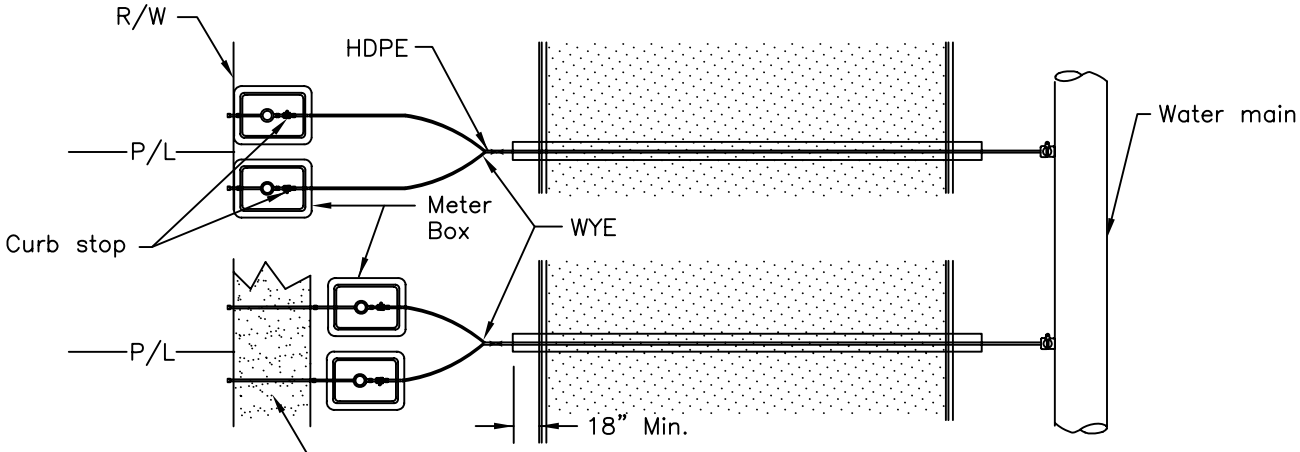

PLAN VIEW – DUAL METER

DO NOT INSTALL METER WITHIN SIDEWALK. WHEN SIDEWALK EXISTS, INSTALL METER ON STREET SIDE OF SIDEWALK OR WHERE DIRECTED BY ENGINEER.

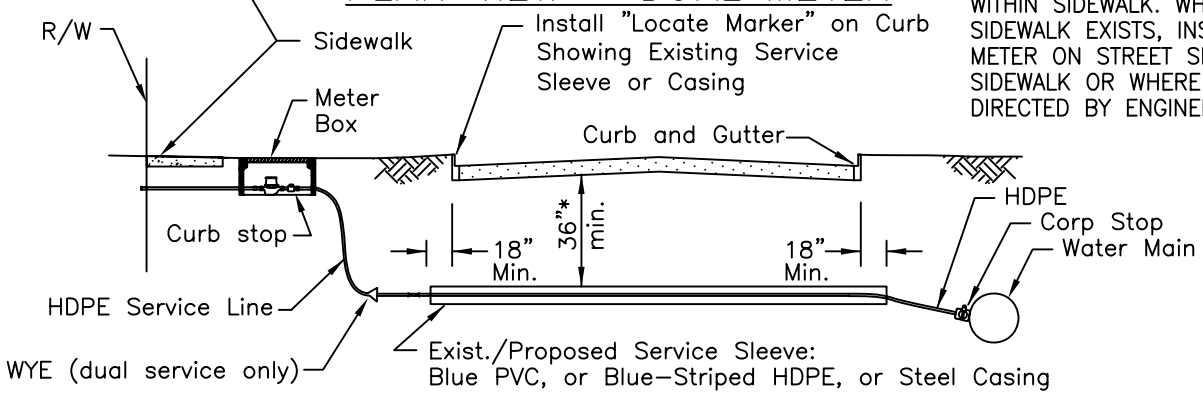

PROFILE VIEW (TYP.)

CASING SPECIFICATION:

1. If pushed–SCH 40 steel pipe (min.)
2. If layed in open trench–SCH 40 steel pipe or SCH 80 PVC solvent weld pipe.

*Or greater, if required by ROW controlling agency

**Line sizes applicable for 2" DDCV

SINGLE METER SIZE (inches)	SERVICE LINE SIZE (inches) (15'–80')	(80'–150')	CASING SIZE (inches)
3/4	1	2	2 / 4
1	2	2	4
1–1/2	2	2	4
2**	4" D.I.P.	4" D.I.P.	12

DUAL METER SIZE (inches)	SERVICE LINE SIZE (inches) (15'–80')	(80'–150')	CASING SIZE (inches)
3/4	2	2	4
1	2	4" D.I.P.	4 / 12
1–1/2	n/a	n/a	n/a
2	n/a	n/a	n/a

(Feet refer to distance from water main to meter)

TAMPA WATER DEPARTMENT	APPROVED Sept. 2011	REVISED	SINGLE & DUAL METERED SERVICE – LONG SIDE 3/4", 1", 1–1/2" AND 2"	5.05

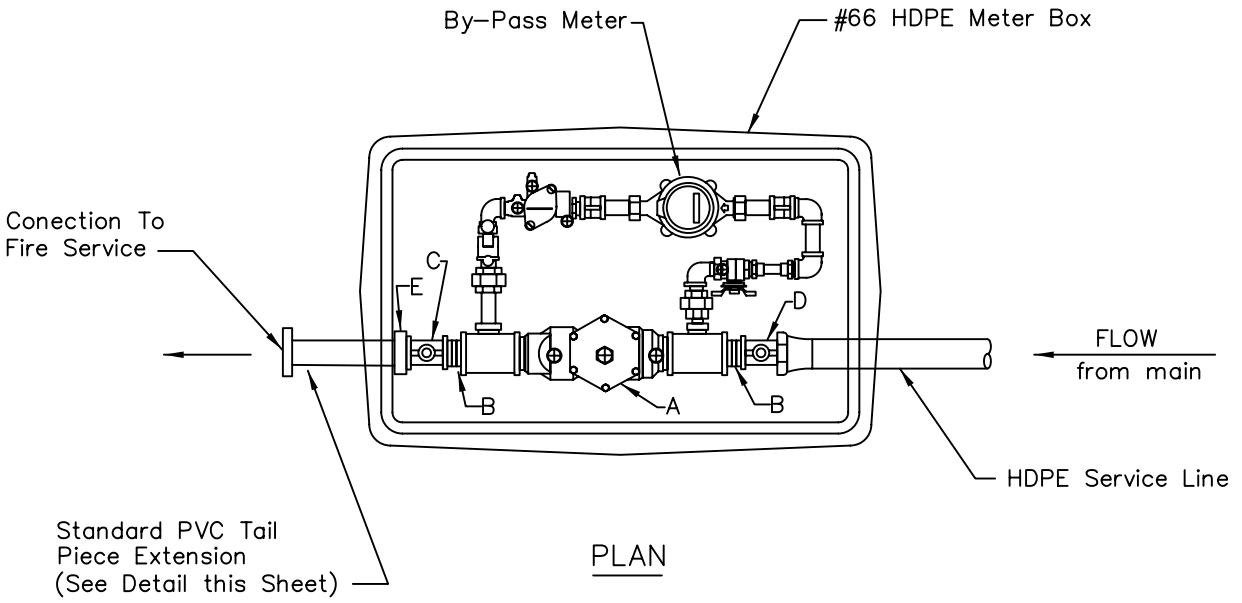

PLAN

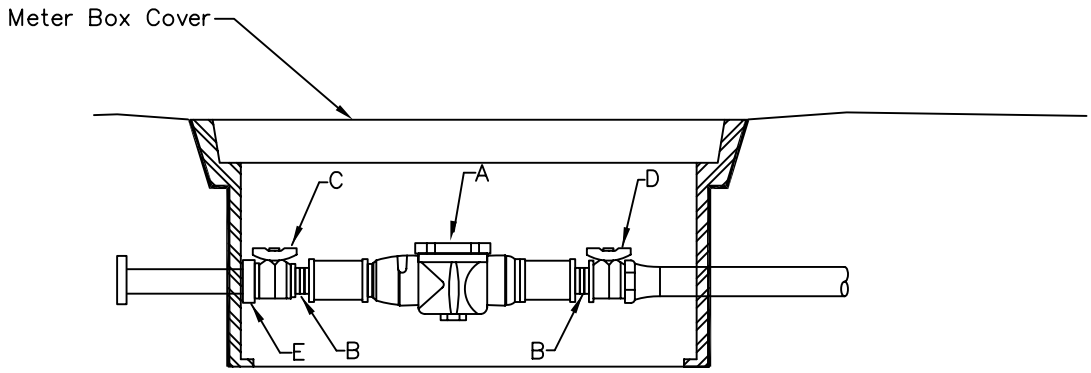

PROFILE

D.C.V. INSTALLATION

–PARTS LIST–

ITEM	DESCRIPTION
A	2" DOUBLE DETECTOR CHECK VALVE
B	2" CLOSE NIPPLE
C	2" CURB STOP (FIP X FIP)
D	2" CURB STOP (FIP X CC)
E	2" SCH 40 PVC MIP X WELD COUPLING

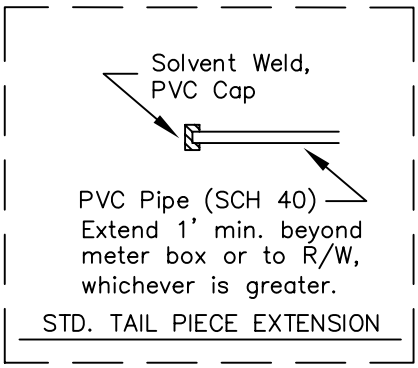

STD. TAIL PIECE EXTENSION

NOTE: Parts list is for standard installation; actual parts required may vary as directed by the Engineer.

TAMPA WATER DEPARTMENT	APPROVED Sept. 2011	REVISED	2" DOUBLE DETECTOR CHECK VALVE ASSEMBLY IN METER BOX	5.09

#37 HDPE METER BOX

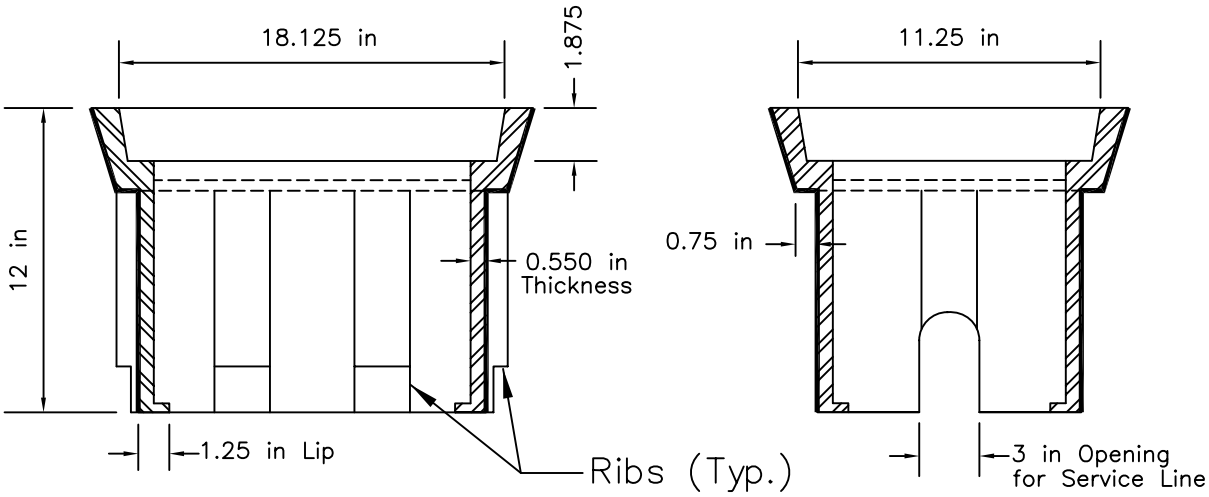

LONG–SIDE VIEW

SHORT–SIDE VIEW

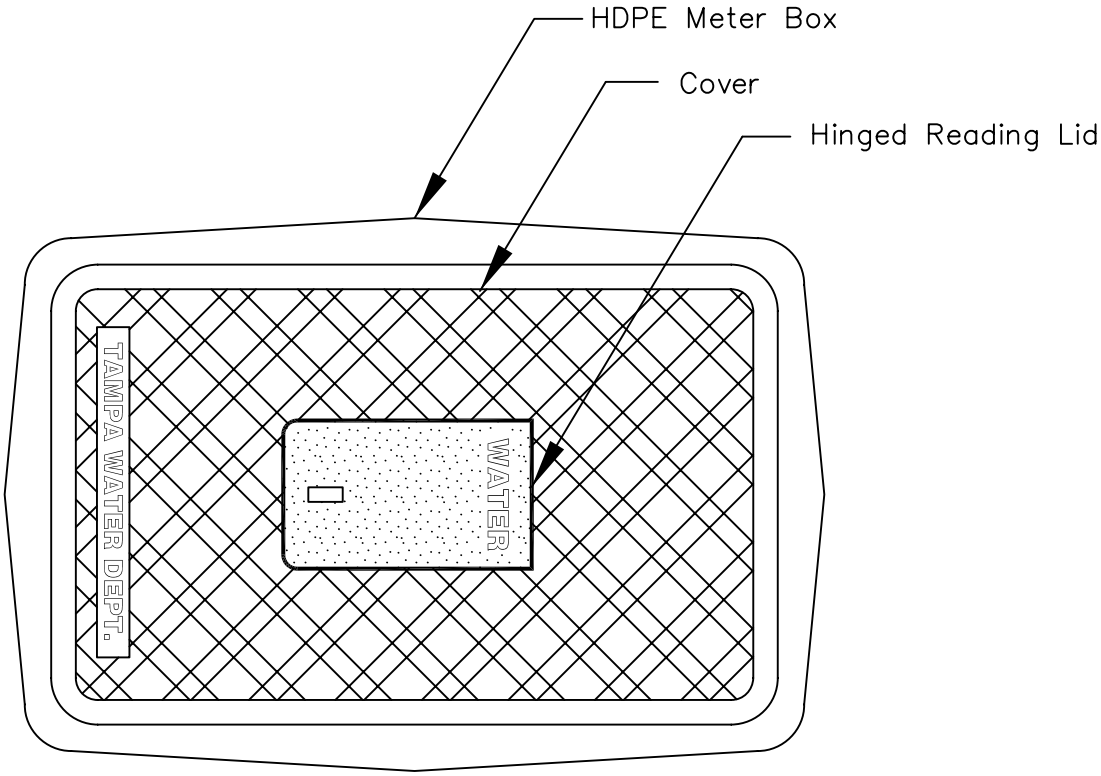

DUCTILE IRON COVER
W/DUCTILE IRON, HINGED READING LID

TOP VIEW

TAMPA WATER DEPARTMENT	APPROVED Sept. 2011	REVISED RNM April '09 JRD Sept. 2011	3/4" OR 1" SINGLE SERVICE HDPE METER BOX	5.10

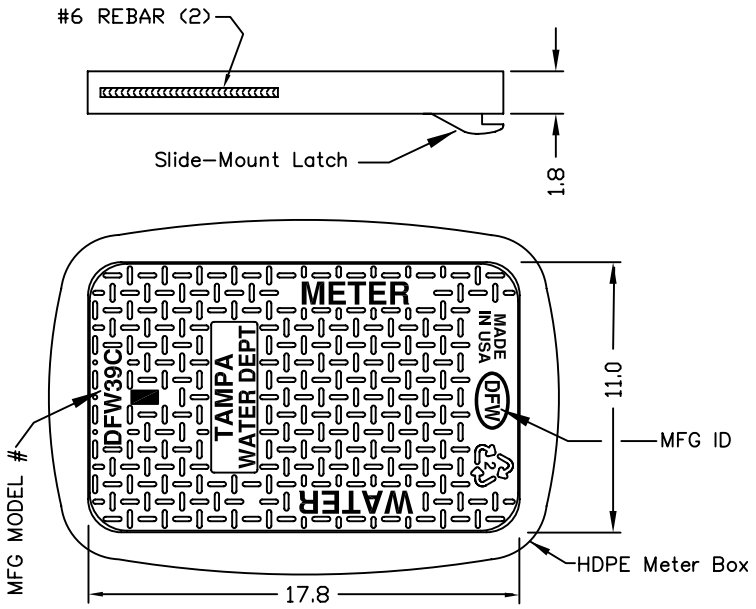

HDPE Lid w/Rebar

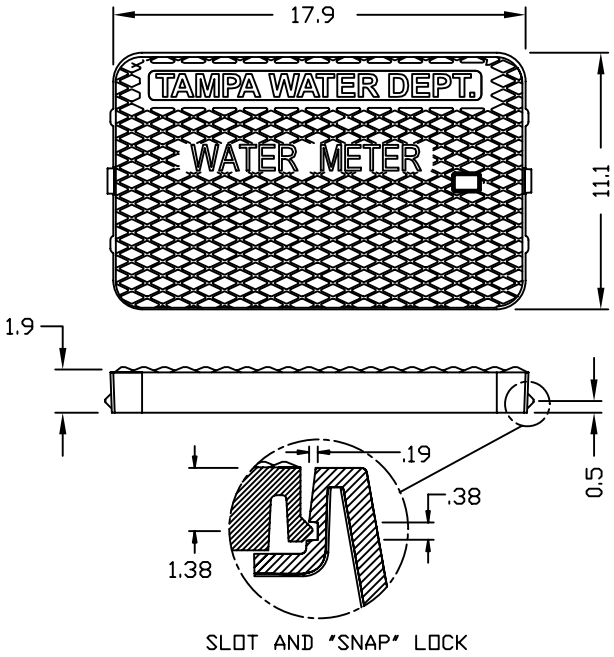

HDPE Lid w/Snap Lock

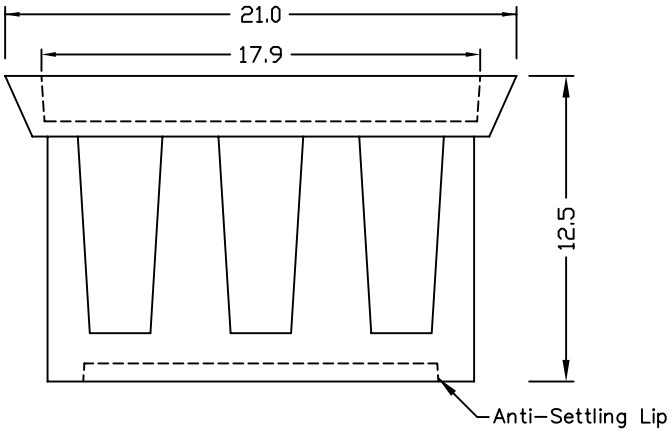

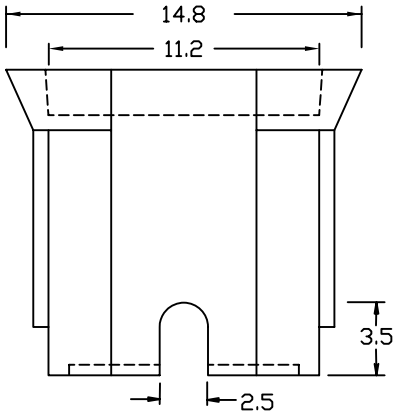

HDPE METER BOX w/LIP

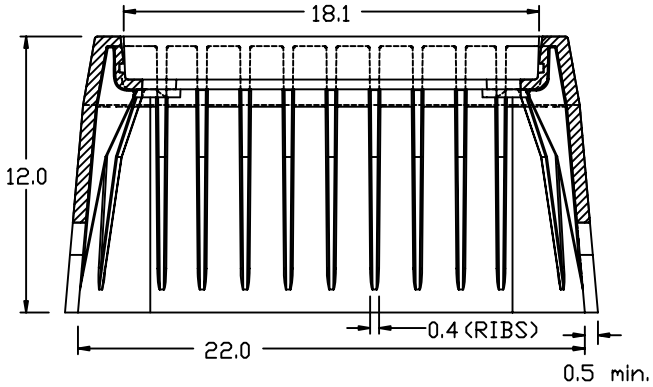

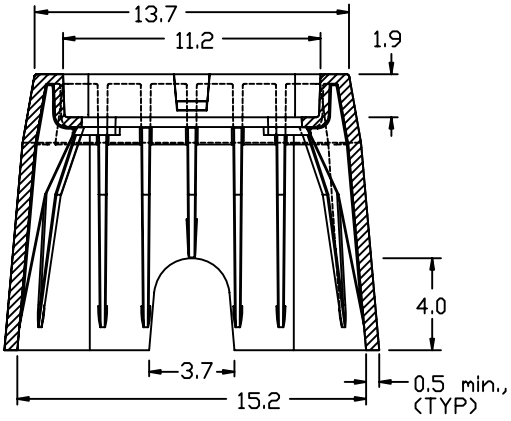

HDPE METER BOX w/o LIP

Units = inches
(NTS)

#37 HDPE METER BOX w/HDPE COVER

TAMPA WATER DEPARTMENT	APPROVED Sept. 2011	REVISED	3/4" OR 1" SINGLE SERVICE HDPE METER BOX	5.10A

DUAL "H"
HDPE METER BOX

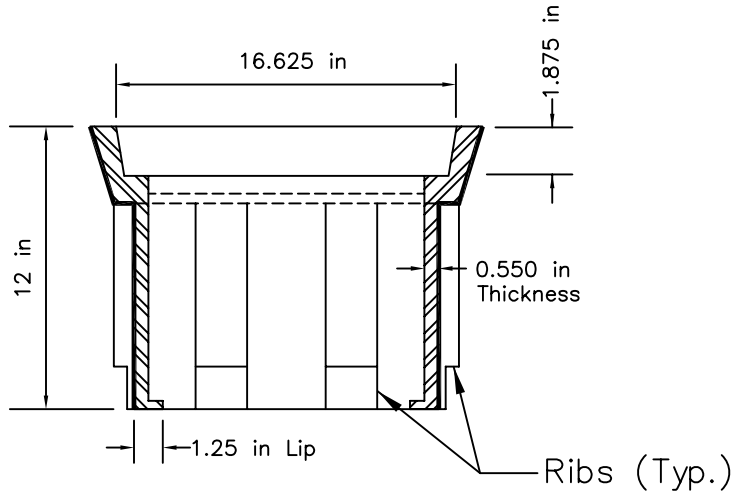

LONG–SIDE VIEW

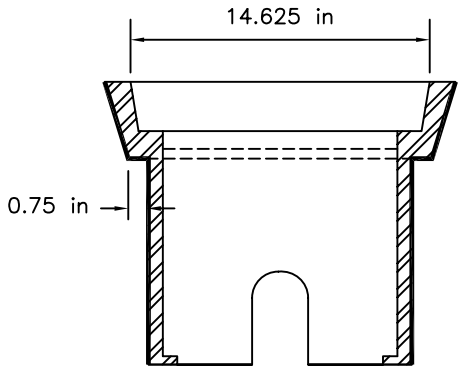

SHORT–SIDE VIEW (FRONT)

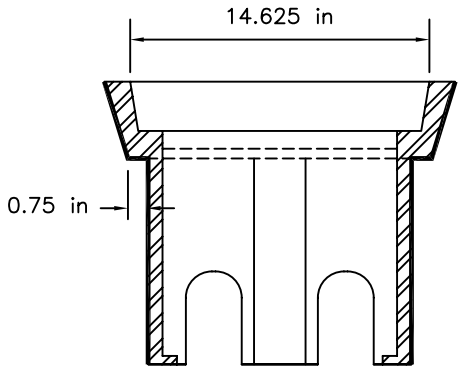

SHORT–SIDE VIEW (BACK)

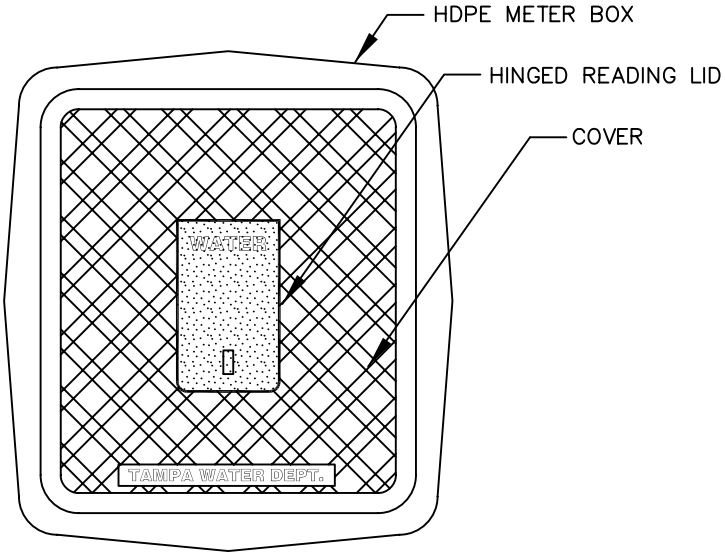

DUCTILE IRON COVER
W/DUCTILE IRON, HINGED READING LID

TOP VIEW

TAMPA WATER DEPARTMENT	APPROVED Sept. 2011	REVISED RNM April '09 JRD Sept. 2011	3/4" OR 1" DUAL SERVICE HDPE METER BOX	5.11

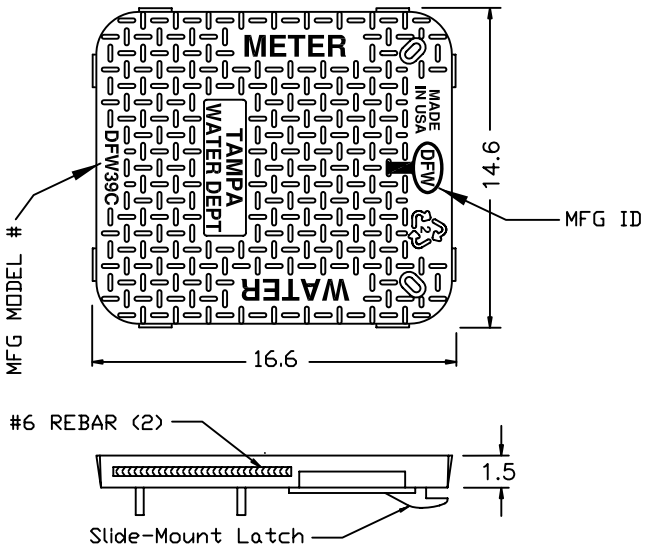

HDPE LID w/REBAR

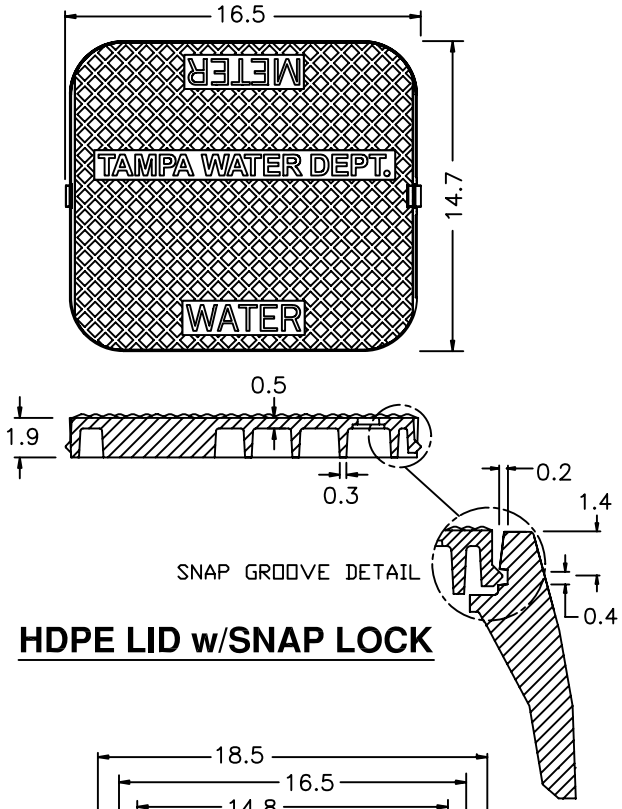

HDPE LID w/SNAP LOCK

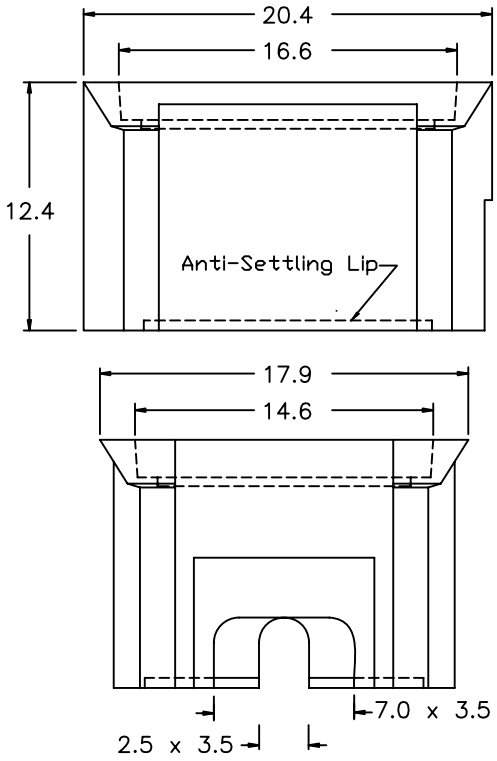

HDPE METER BOX w/LIP

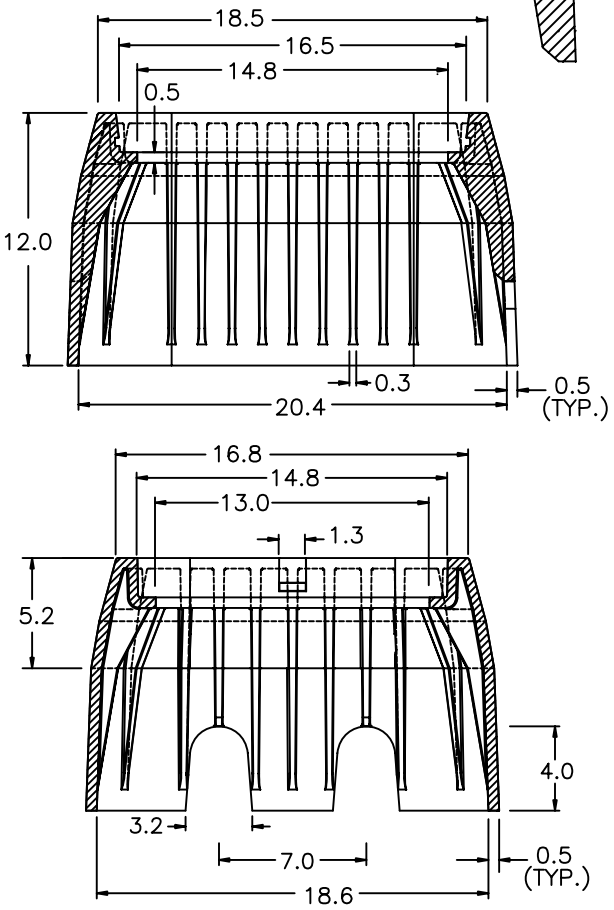

HDPE METER BOX w/o LIP

Units = inches
(NTS)

"DUAL-H" HDPE METER BOX w/HDPE COVER

TAMPA WATER DEPARTMENT	APPROVED Sept. 2011	REVISED	3/4" OR 1" DUAL SERVICE HDPE METER BOX	5.11A

#66 HDPE METER BOX

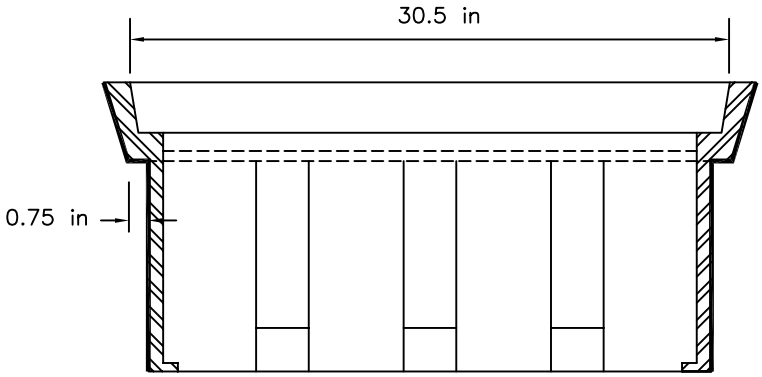

LONG–SIDE VIEW

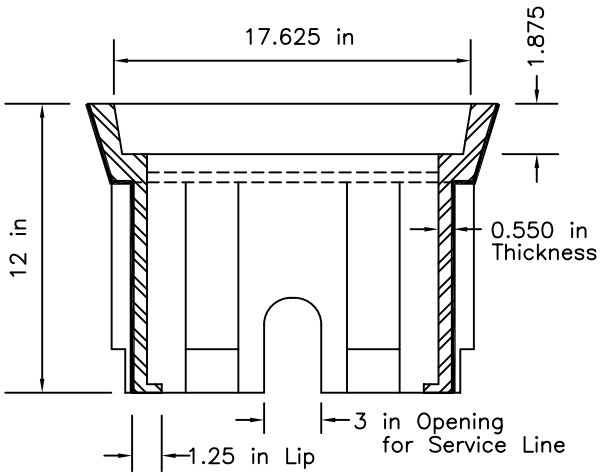

SHORT–SIDE VIEW

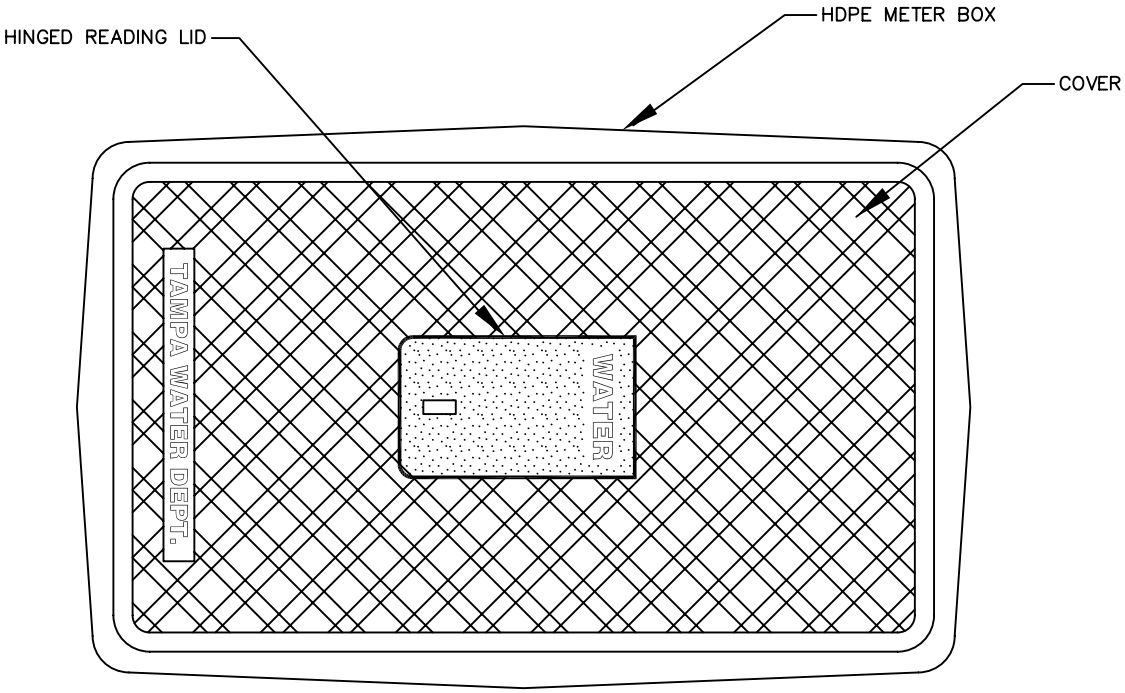

DUCTILE IRON COVER
W/DUCTILE IRON, HINGED READING LID

TOP VIEW

TAMPA WATER DEPARTMENT	APPROVED Sept. 2011	REVISED RNM April '09 JRD Sept. 2011	1–1/2" & 2" SINGLE SERVICE HDPE METER BOX	5.12

TAMPA WATER DEPARTMENT

APPROVED Sept. 2011

REVISED

ABOVE GROUND TURBINE METER W/STRAINERS

6.01

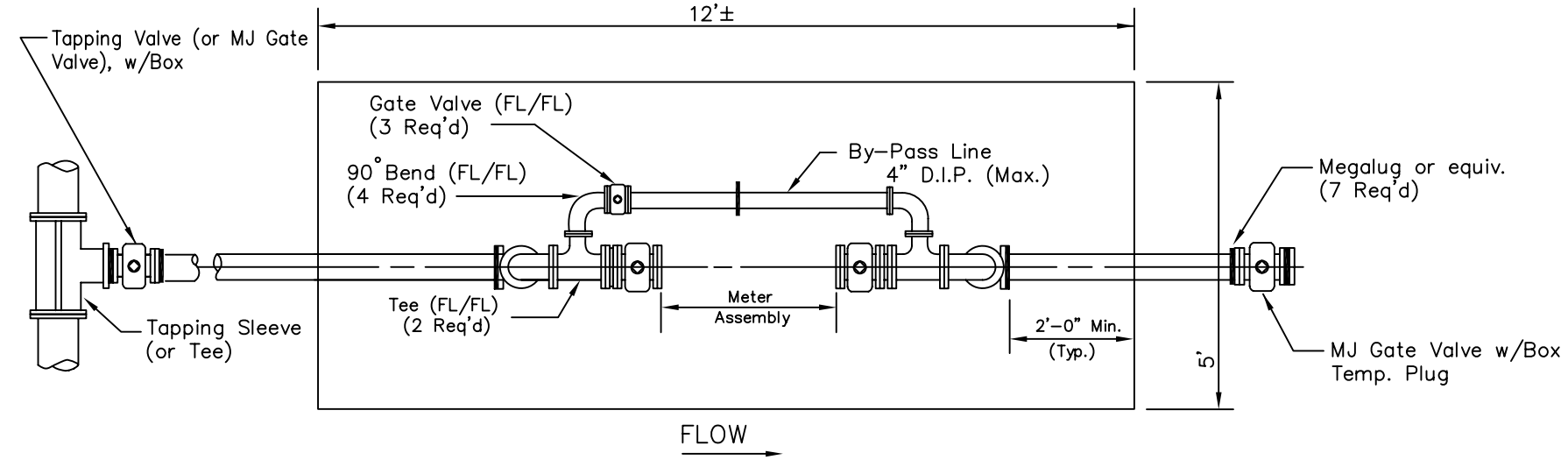

PLAN

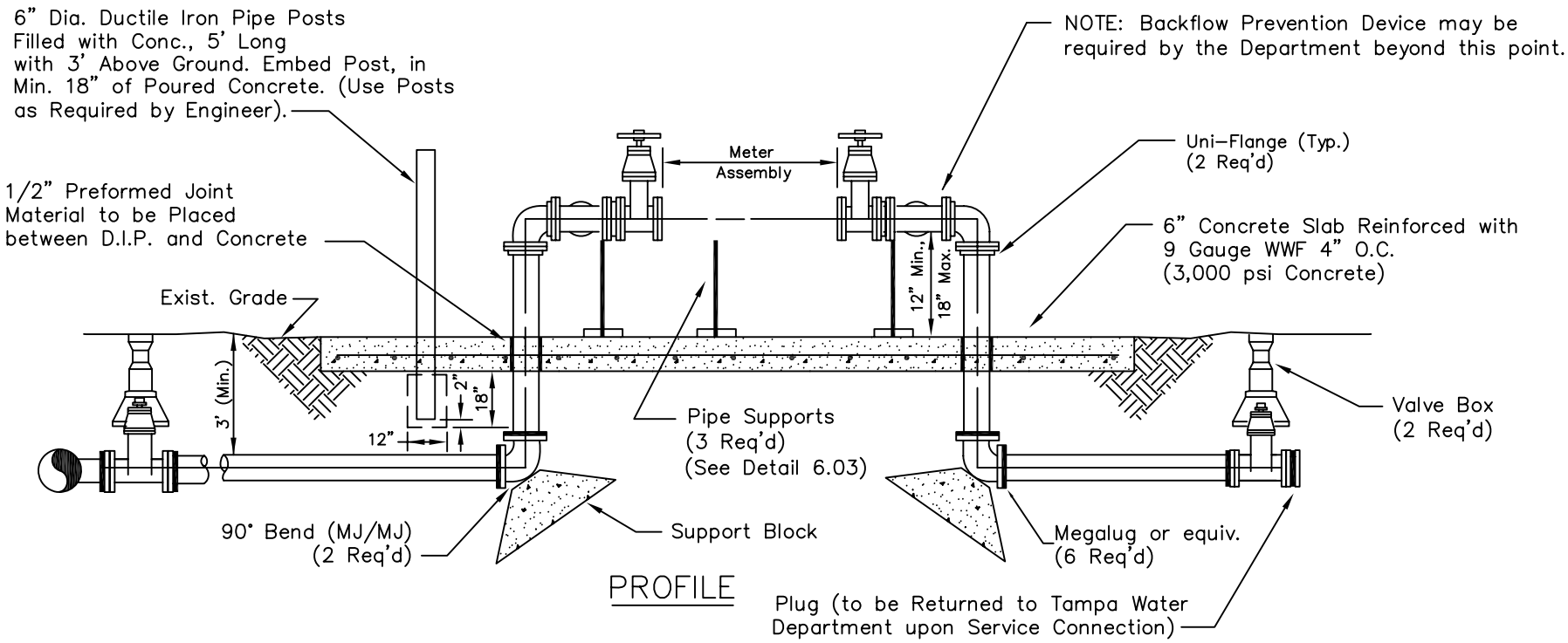

PROFILE

TAMPA WATER DEPARTMENT

APPROVED Sept. 2011

REVISED

ABOVE GROUND DOUBLE DETECTOR CHECK VALVE ASSEMBLY

6.02

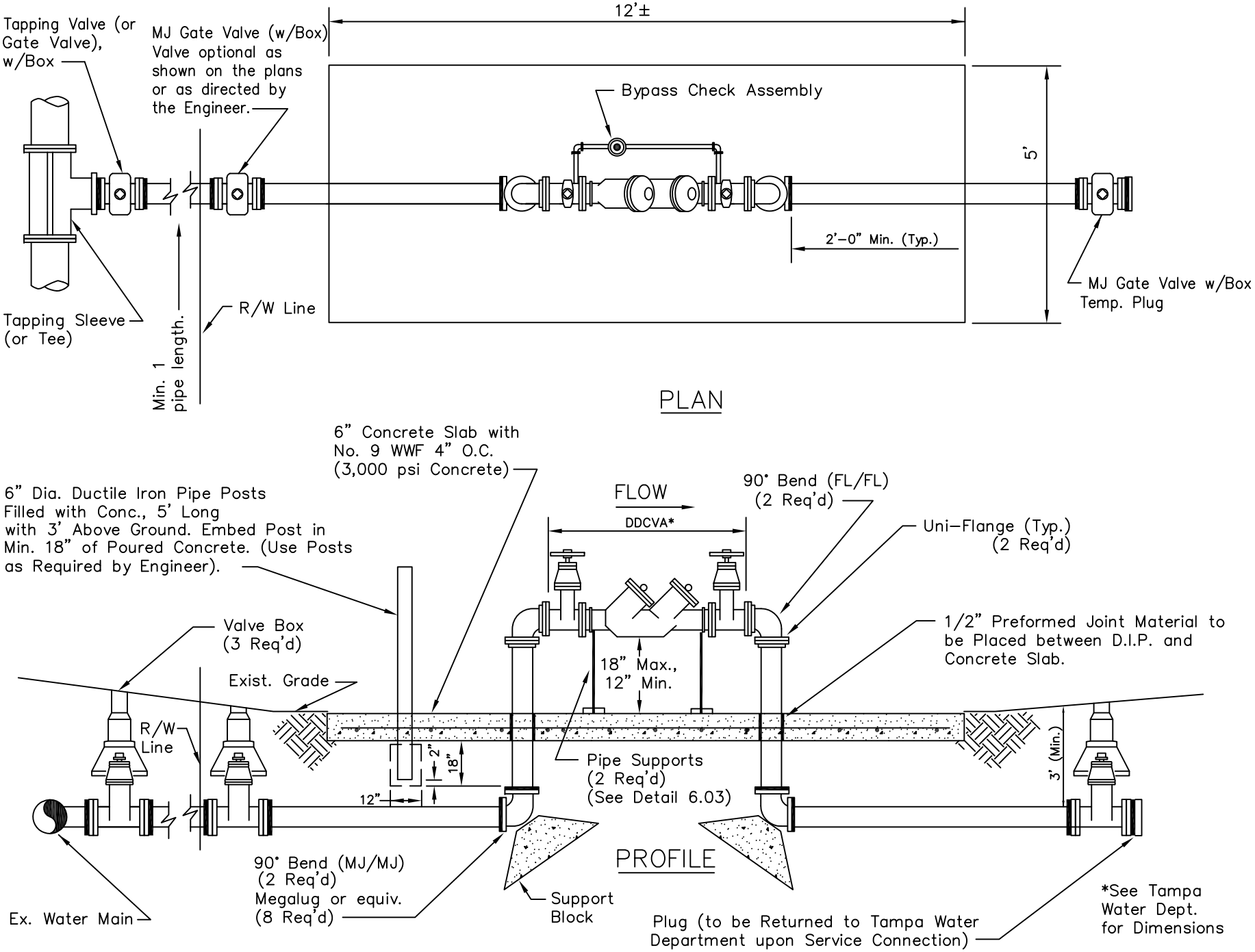

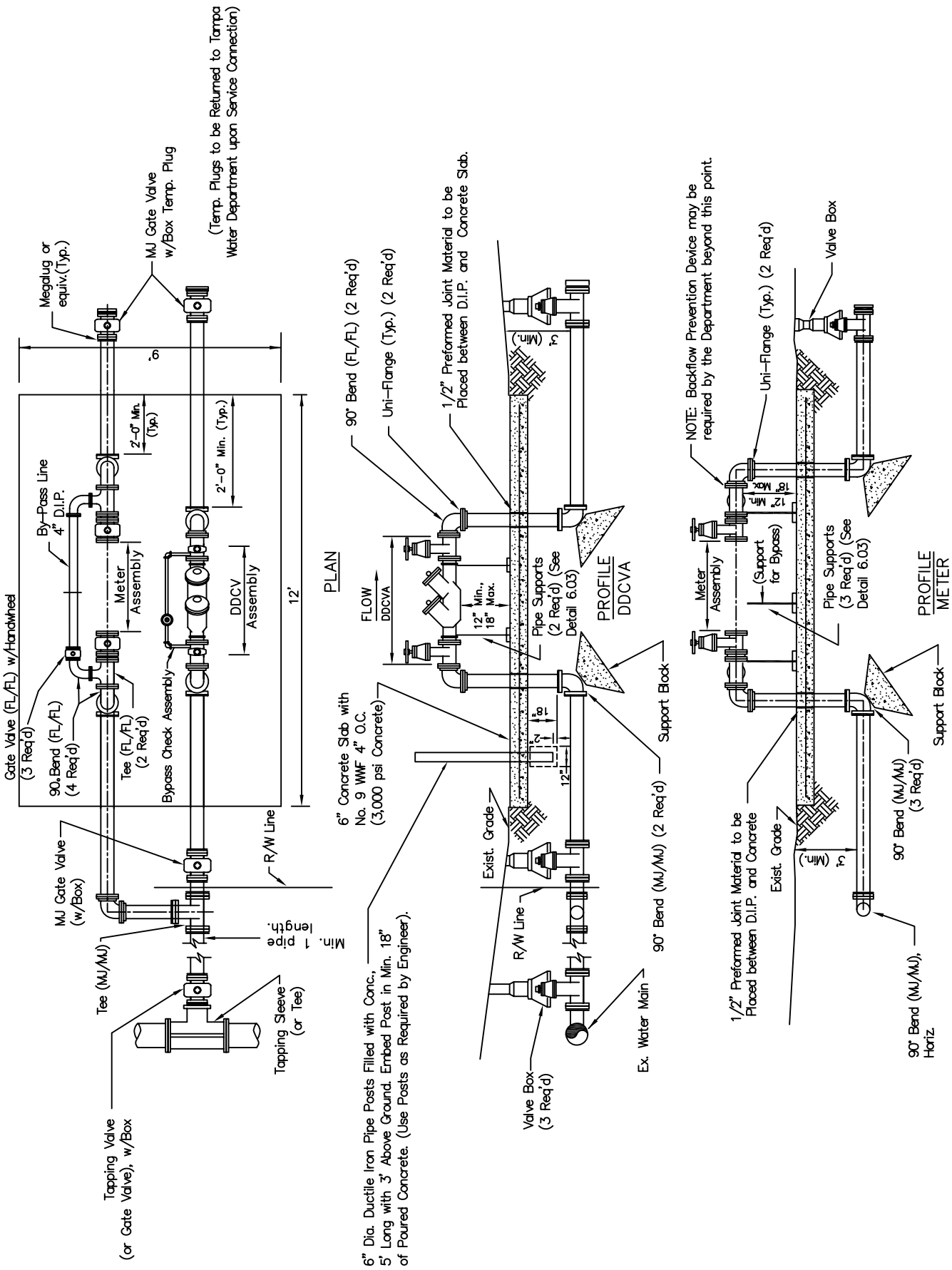

TAMPA WATER DEPARTMENT	APPROVED	REVISED	ABOVE GROUND DOUBLE DETECTOR CHECK VALVE ASSEMBLY AND TURBINE METER W/STRAINER	6.02B
	Sept. 2011	RNM 4/08		
		JRD 9/2011		

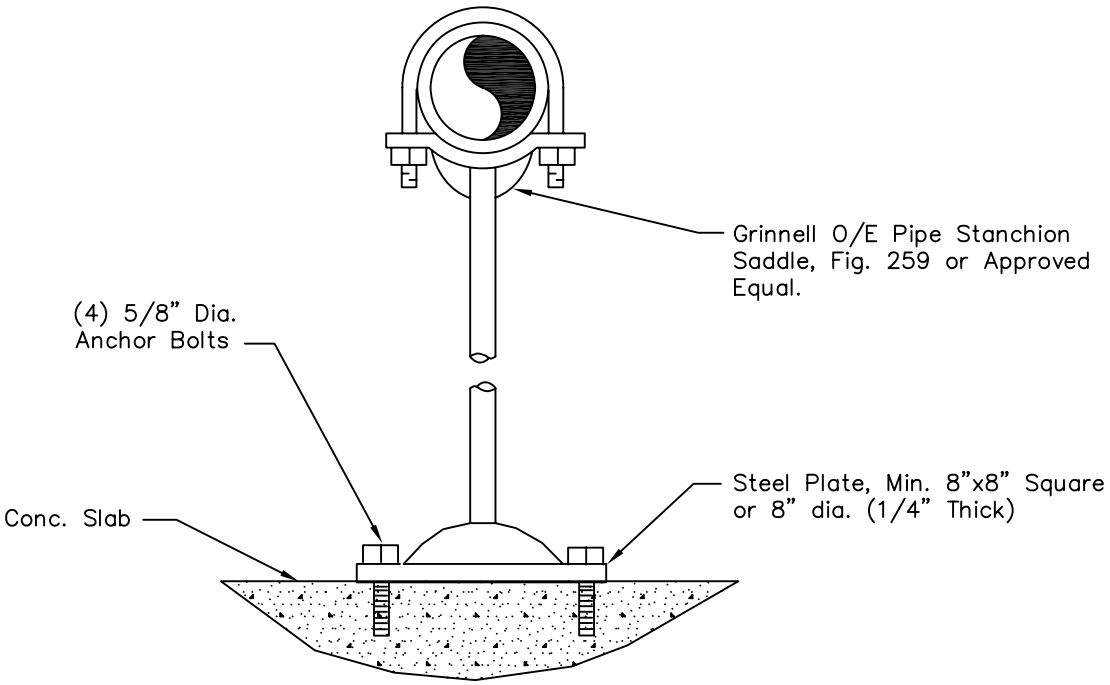

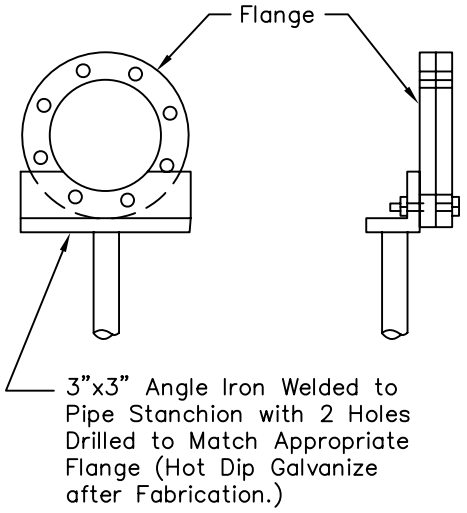

TAMPA WATER DEPARTMENT	APPROVED Sept. 2011	REVISED	PIPE SUPPORTS FOR ABOVE GROUND DDCVA	6.03

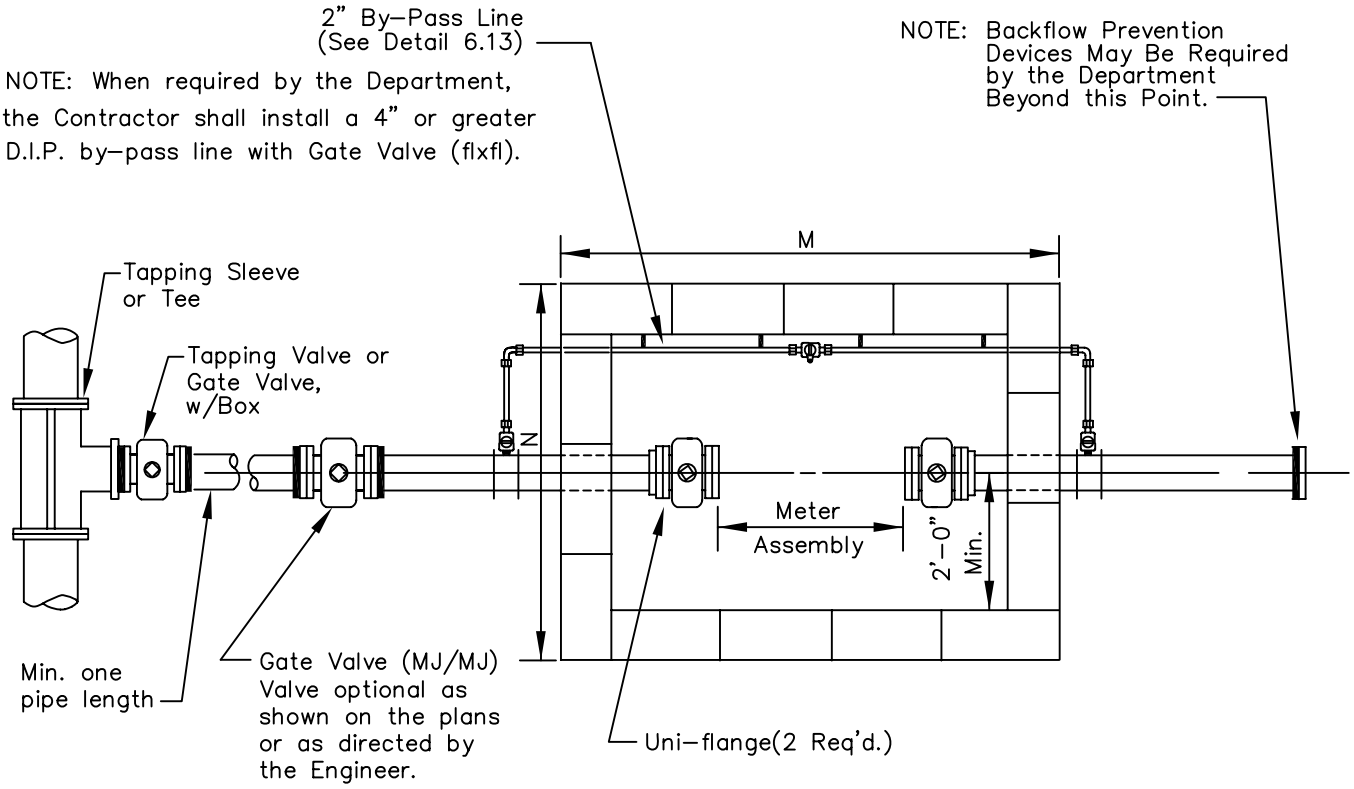

NOTE: See Details 6.07 & 6.08 for Vault Details and Dimensions.

PLAN

NOTE: CONSTRUCTION OF VAULT WITHOUT METER

1. Set uniflange at minimum distance from wall and attach isolation valves.
2. Span distance between isolation valves with single piece of pipe.
3. To install meter,remove pipe between valves and attach meter to one valve. Pipe shall be cut to size to span the distance between meter and second valve.

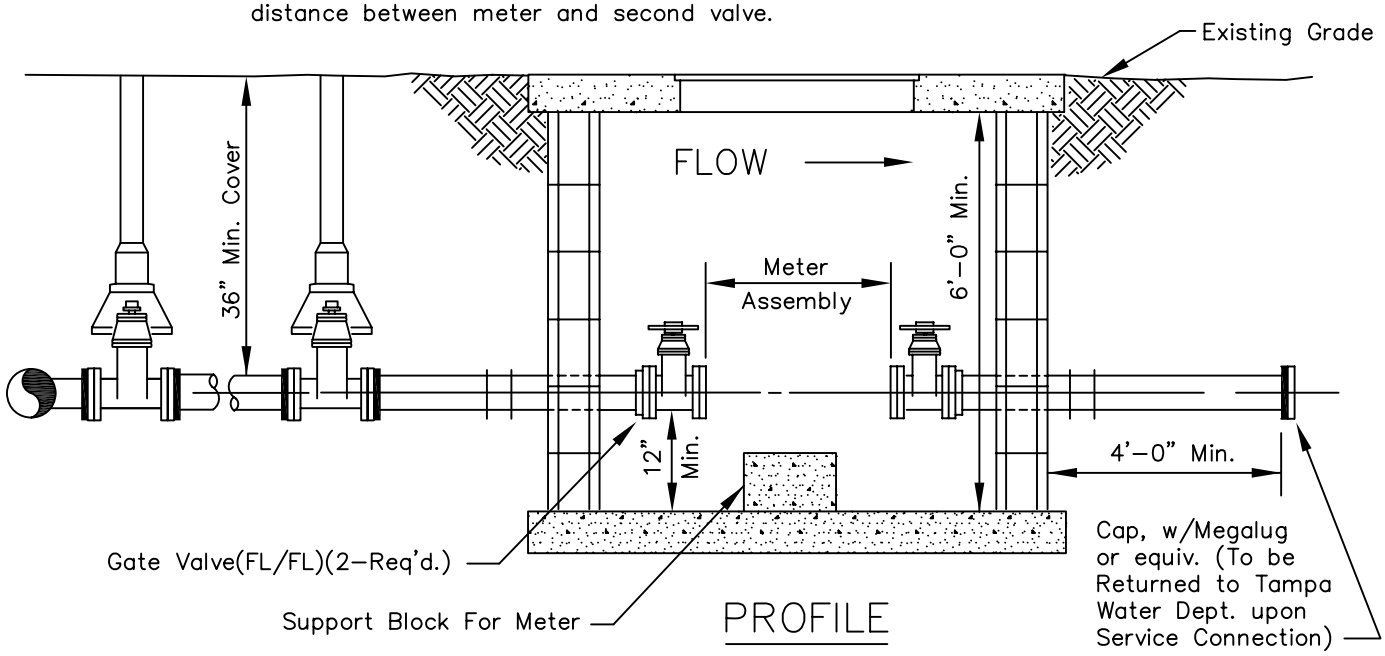

PROFILE

TAMPA WATER DEPARTMENT	APPROVED	REVISED	TURBINE METER IN VAULT	6.04
	Sept., 2011	JRD 4/09 JRD 9/2011		

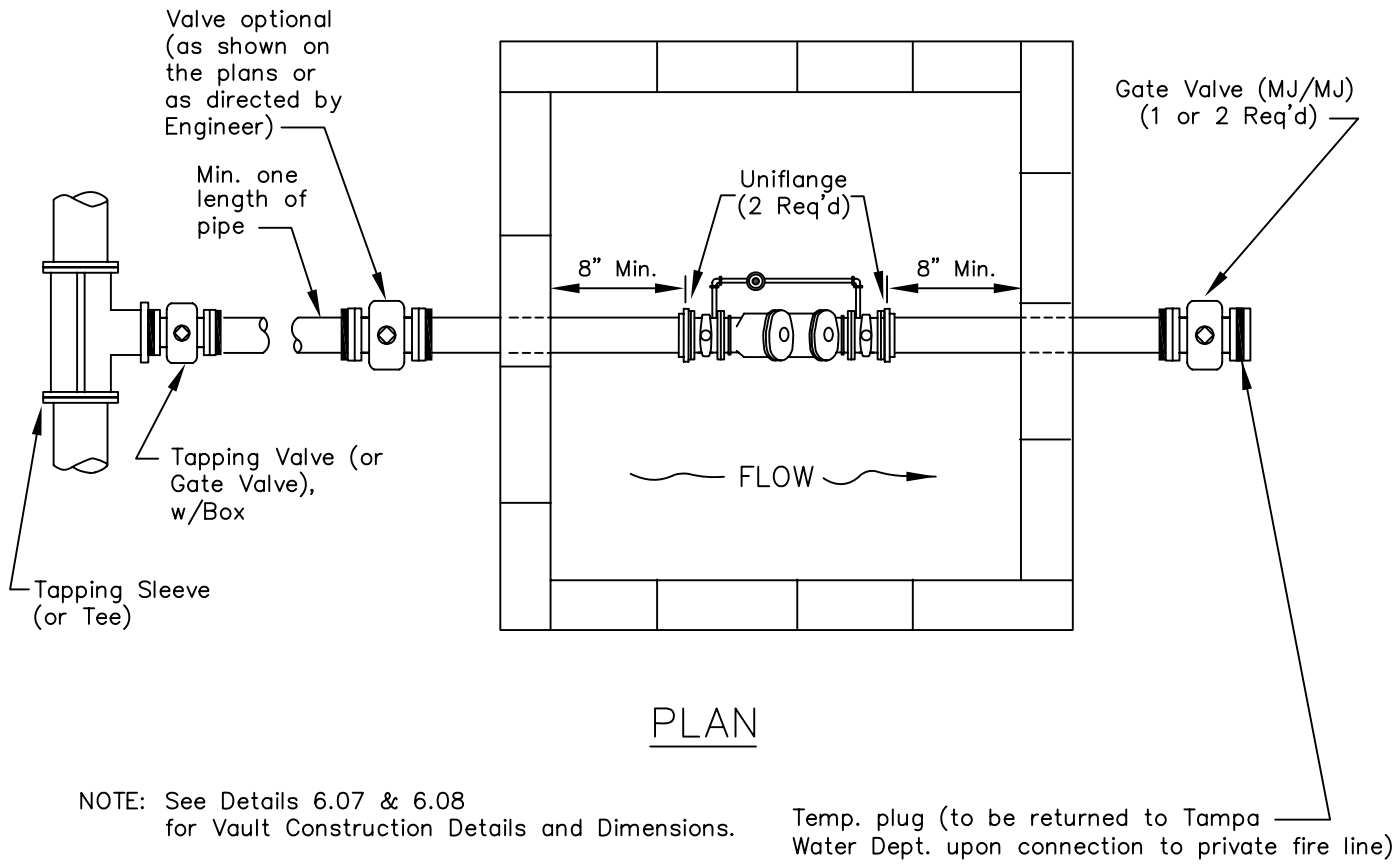

PLAN

NOTE: See Details 6.07 & 6.08 for Vault Construction Details and Dimensions.

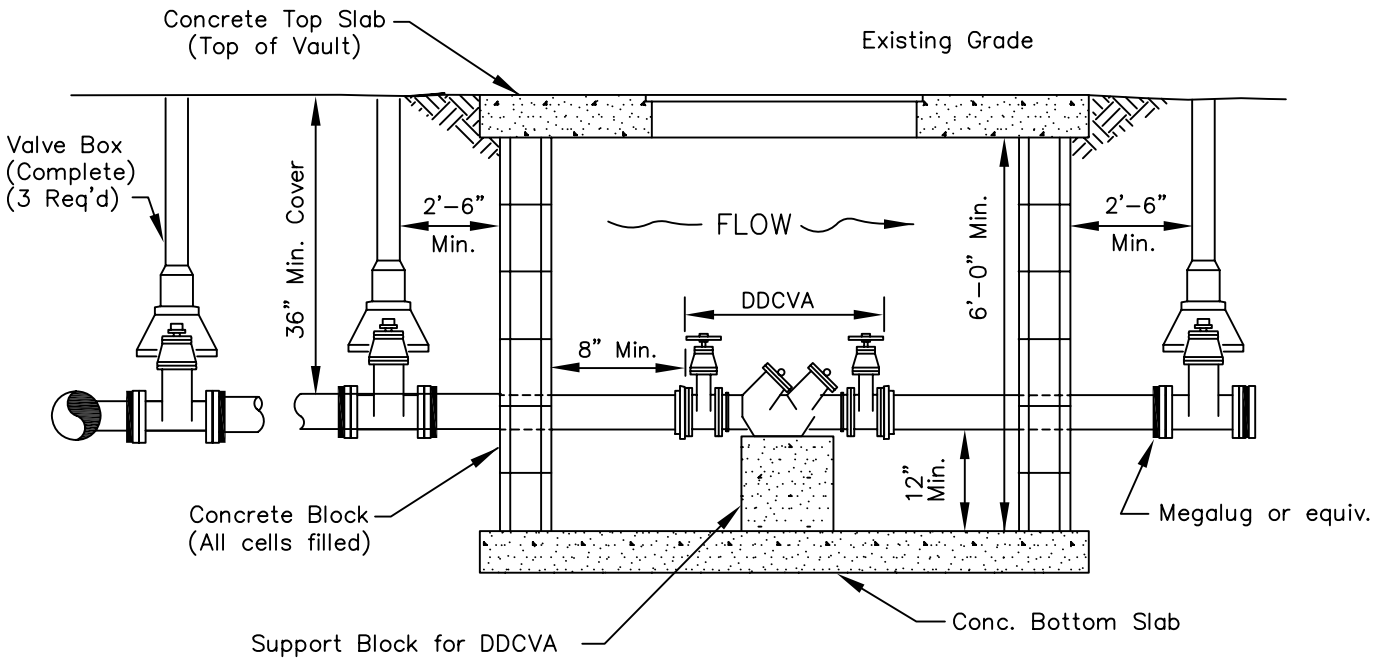

PROFILE

TAMPA WATER DEPARTMENT	APPROVED Sept. 2011	REVISED	DOUBLE DETECTOR CHECK VALVE ASSEMBLY IN VAULT	6.05

NOTE: When required by the Department, the Contractor shall install a 4" or greater D.I.P. by-pass line.

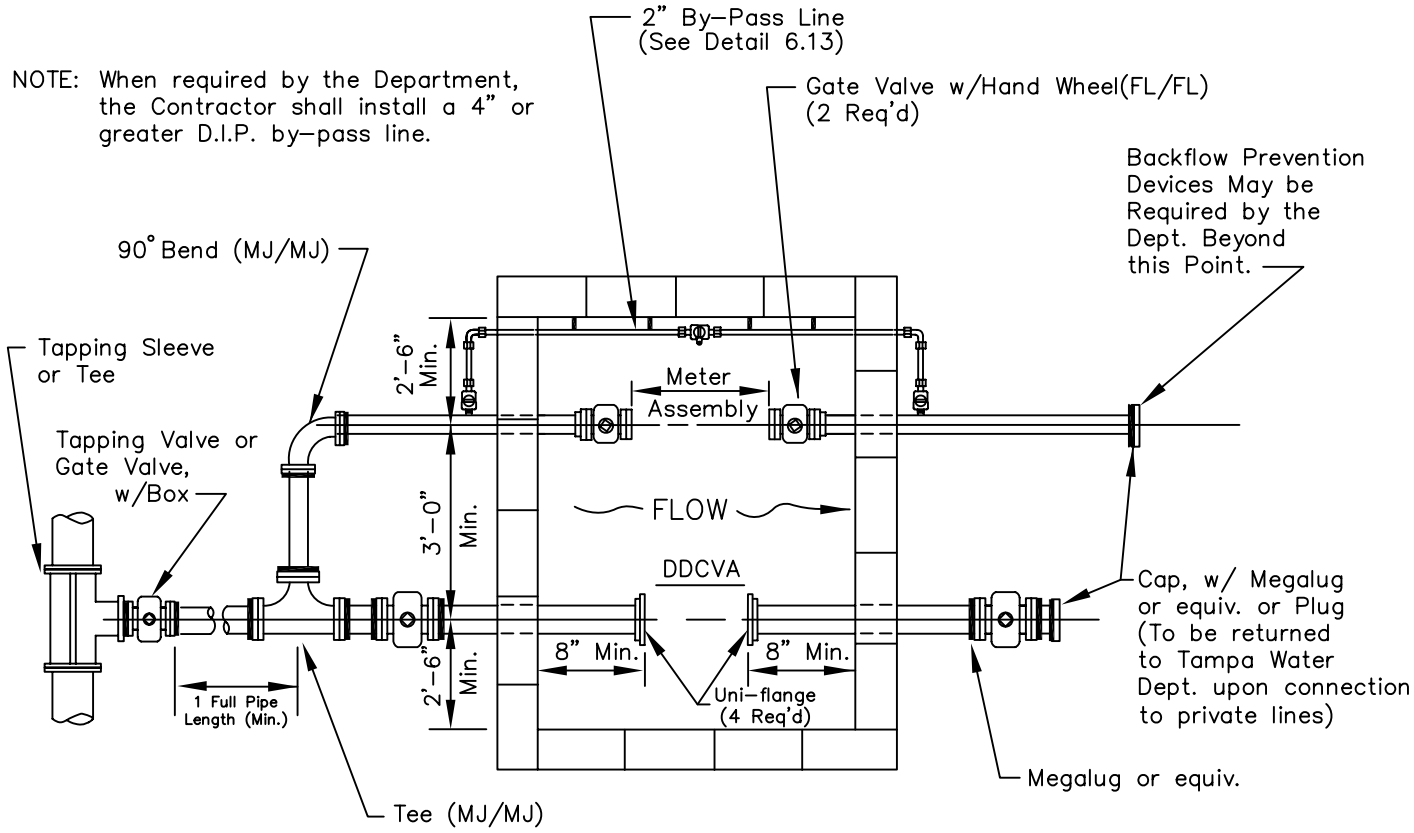

PLAN

NOTE: See Details 6.07 and 6.08 for Vault Details and Dimensions.

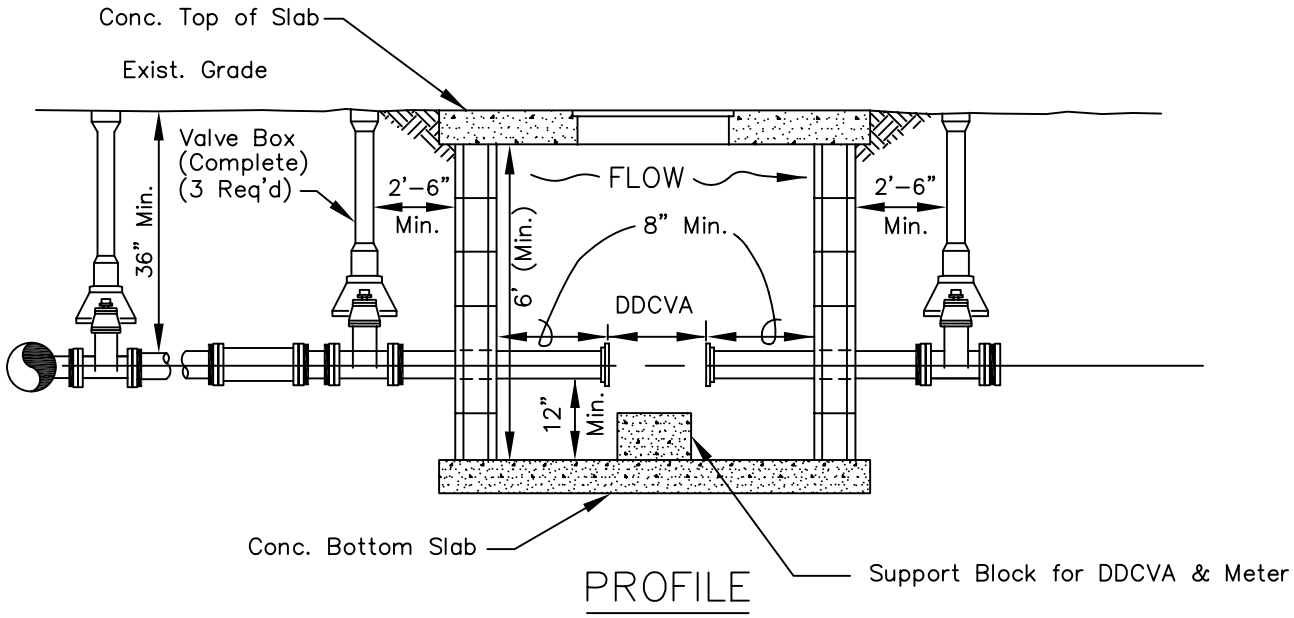

PROFILE

NOTE: VAULT CONSTRUCTION WITHOUT METER

1. Set uniflange at minimum distance from wall and attach isolation valves.
2. Span between two isolation valves shall be a single piece of pipe through vault.
3. To install meter the pipe shall be cut to allow meter to be slipped into position and connected with 2 uniflanges

TAMPA WATER DEPARTMENT	APPROVED Sept. 2011	REVISED	DOUBLE DETECTOR CHECK VALVE ASSEMBLY W/3" & > DOMESTIC METER IN VAULT	6.06

	Top & Bottom Slab Size		Vault Size	
METER SIZE	K	L	M	N
3" & 4" Turbine/ Compound Meter	6'–4"	6'–4"	6'–0"	6'–0"
3",4",6",8" Turbine Meter	8'–4"	5'–8"	8'–0"	5'–4"
4" Double Detector Check	6'–4"	6'–4"	6'–0"	6'–0"
6" Double Detector Check	8'–4"	5'–8"	8'–0"	5'–4"
8" Double Detector Check	9'–8"	8'–4"	9–4"	8'–0"
10" Double Detector Check	11'–0"	8'–4"	10'–8"	8'–0"
4",6",8" DDCV &≥3"Dom. Mtr.	8'–4"	9'–8"	8'–0"	9–4"
10" DDCV &≥3"Dom. Mtr.	8'–4"	11'–0"	8'–0"	10'–8"

NOTE: Vault and Slab sizes may vary as directed by the Engineer.

VAULT DIMENSIONS

All Concrete Poured into Cells Shall be a Min. of 3,000 p.s.i. Strength

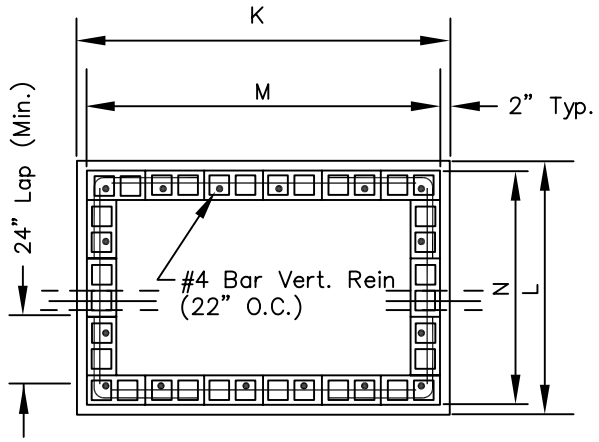

NOTE: Bituminous Type Material (1/2" Preformed Joint Material, Tar Paper) is to be Placed Between Pre–cast Slab and any Concrete Surfaces when Installed in Same

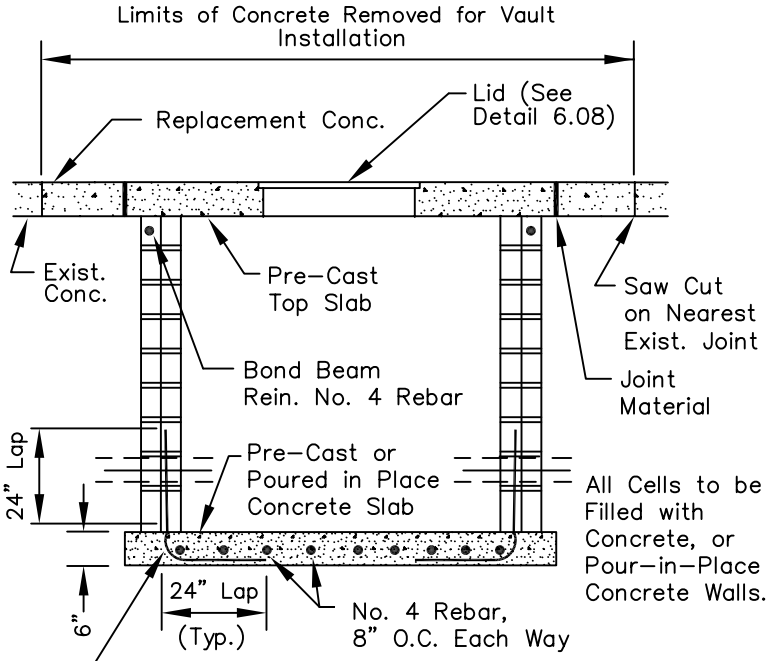

NOTE: No. 4 Rebar Dowels to be Eliminated when Pre–Cast Bottom Slab is Used.

TAMPA WATER DEPARTMENT	APPROVED Sept. 2011	REVISED	VAULT CONSTRUCTION DETAIL FOR DDCVA	6.07

SLAB SIZE			REBAR			
K	L	T	K		L	
			Size	Spacing	Size	Spacing
TOP SLAB						
6'–4"	6'–4"	6"	No. 6	7–1/2"	No. 6	7–1/2"
8'–4"	5'–8"	6"	No. 6	5–1/4"	No. 6	8–1/2"
9'–8"	8'–4"	8"	No. 6	5–1/8"	No. 6	6"
11'–0"	8'–4"	8"	No. 6	5–1/8"	No. 6	6"
BOTTOM SLAB						
6'–4"	6'–4"	6"	No. 4	8"	No. 4	8"
8'–4"	5'–8"	6"	No. 4	8"	No. 4	8"
9'–8"	8'–4"	6"	No. 4	8"	No. 4	8"
11'–0"	8'–4"	6"	No. 4	8"	No. 4	8"

Concrete– 4,500 psi 28 Day Strength
Steel– 60 psi Yield Strength

NOTE: Slab size may vary as determined by the Engineer.

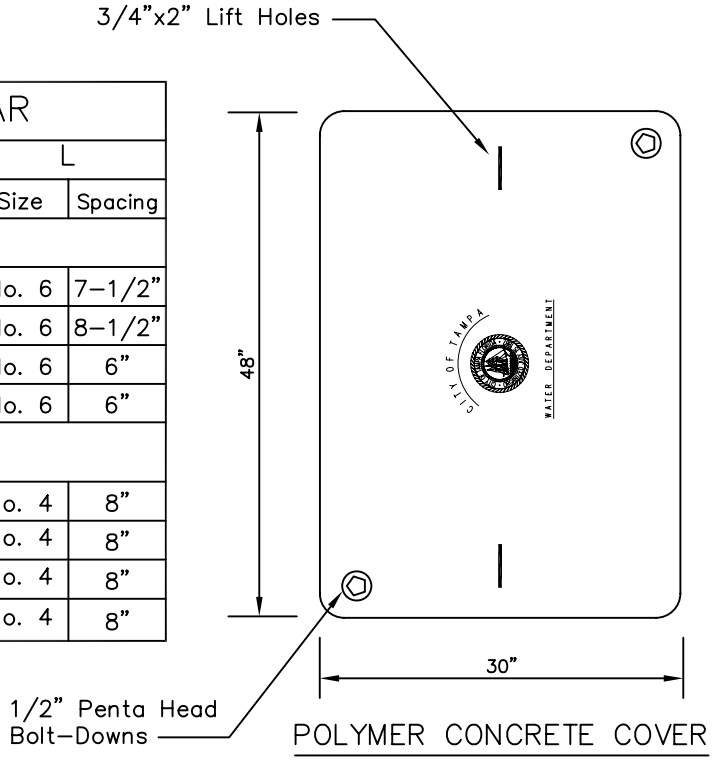

POLYMER CONCRETE COVER

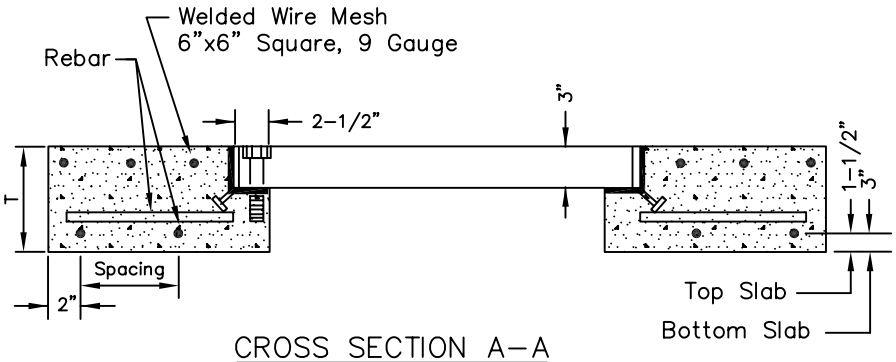

CROSS SECTION A–A

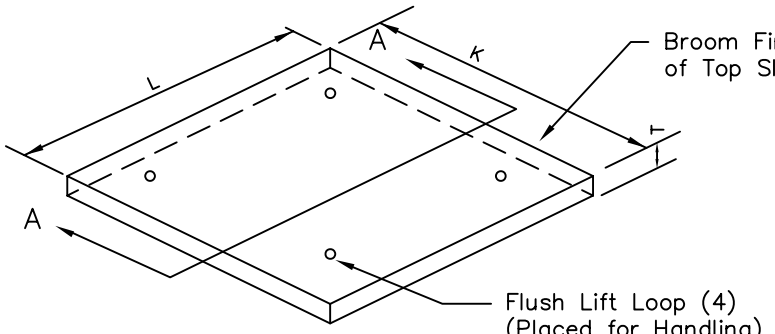

SLAB ISOMETRIC

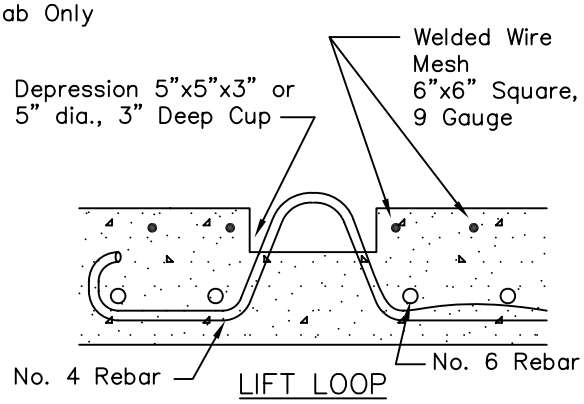

LIFT LOOP

TAMPA WATER DEPARTMENT	APPROVED Sept. 2011	REVISED	VAULT CONCRETE SLAB DETAIL FOR DDCVA	6.08

TAMPA WATER DEPARTMENT

APPROVED Sept. 2011

REVISED

TURBINE METER W/STRAINERS IN ABOVE GROUND VAULT

6.09

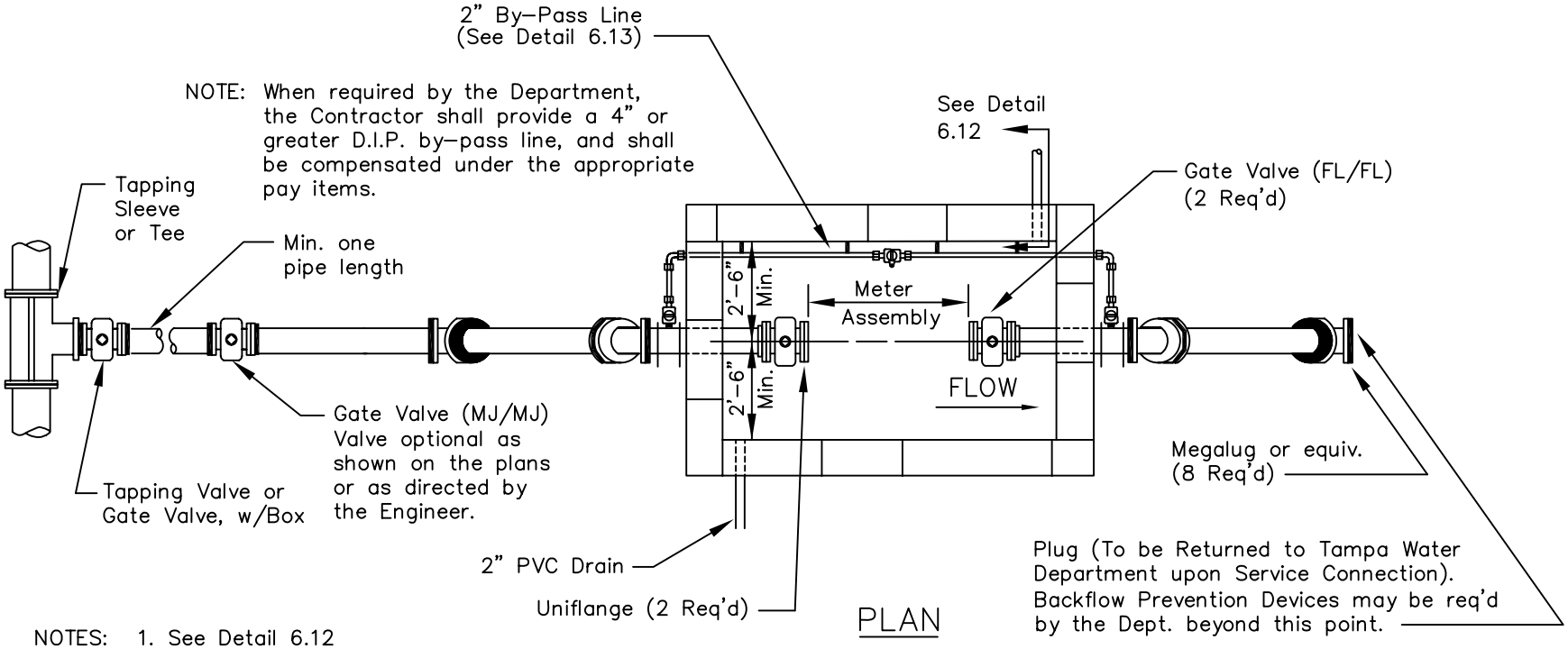

PLAN

NOTES:
1. See Detail 6.12 for Above Ground Vault Details
2. Minimum Clearance for All Internal and External Fittings Shall be 8" from All Walls

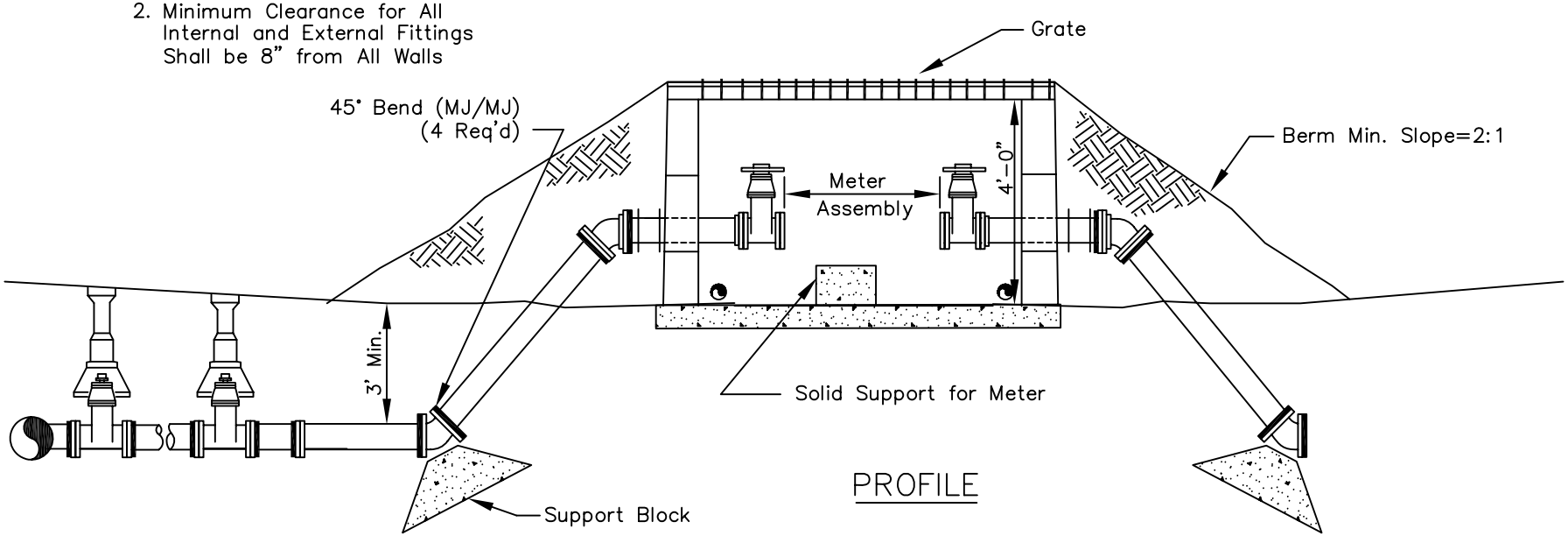

PROFILE

TAMPA WATER DEPARTMENT

APPROVED Sept. 2011

REVISED

DOUBLE DETECTOR CHECK VALVE ASSEMBLY IN ABOVE GROUND VAULT

6.10

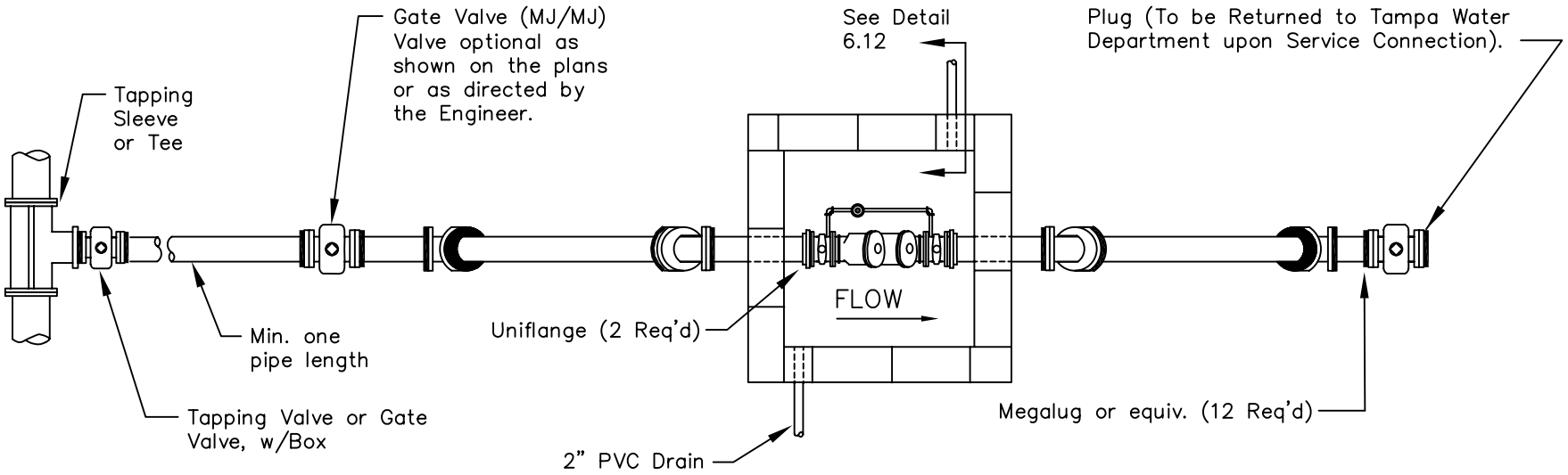

PLAN

NOTES:
1. See Detail 6.12 for Above Ground Vault Details
2. Minimum Clearance for All Internal and External Fittings Shall be 8" from All Walls

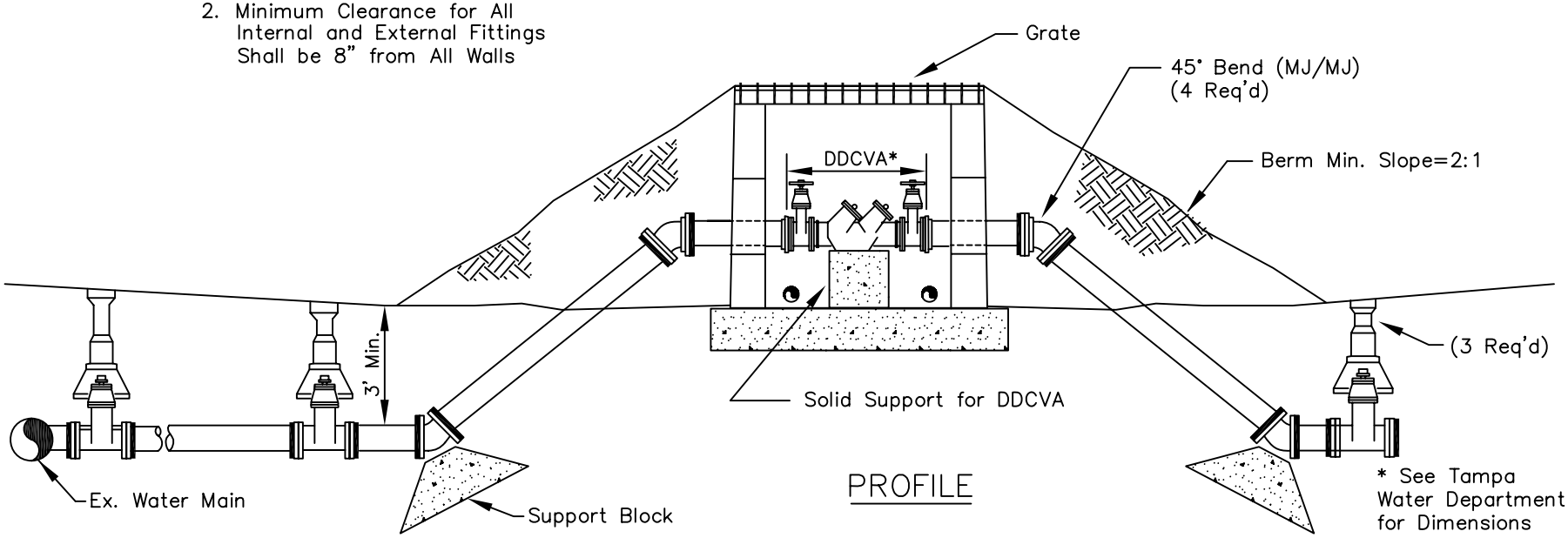

PROFILE

TAMPA WATER DEPARTMENT

APPROVED Sept. 2011

REVISED

FIRE LINE SERVICE AND ≥ 3" DOMESTIC METER IN ABOVE GROUND VAULT

6.11

NOTE: When required by the Department, the Contractor shall provide a 4" or greater D.I.P. by-pass line, and shall be compensated under the appropriate pay items.

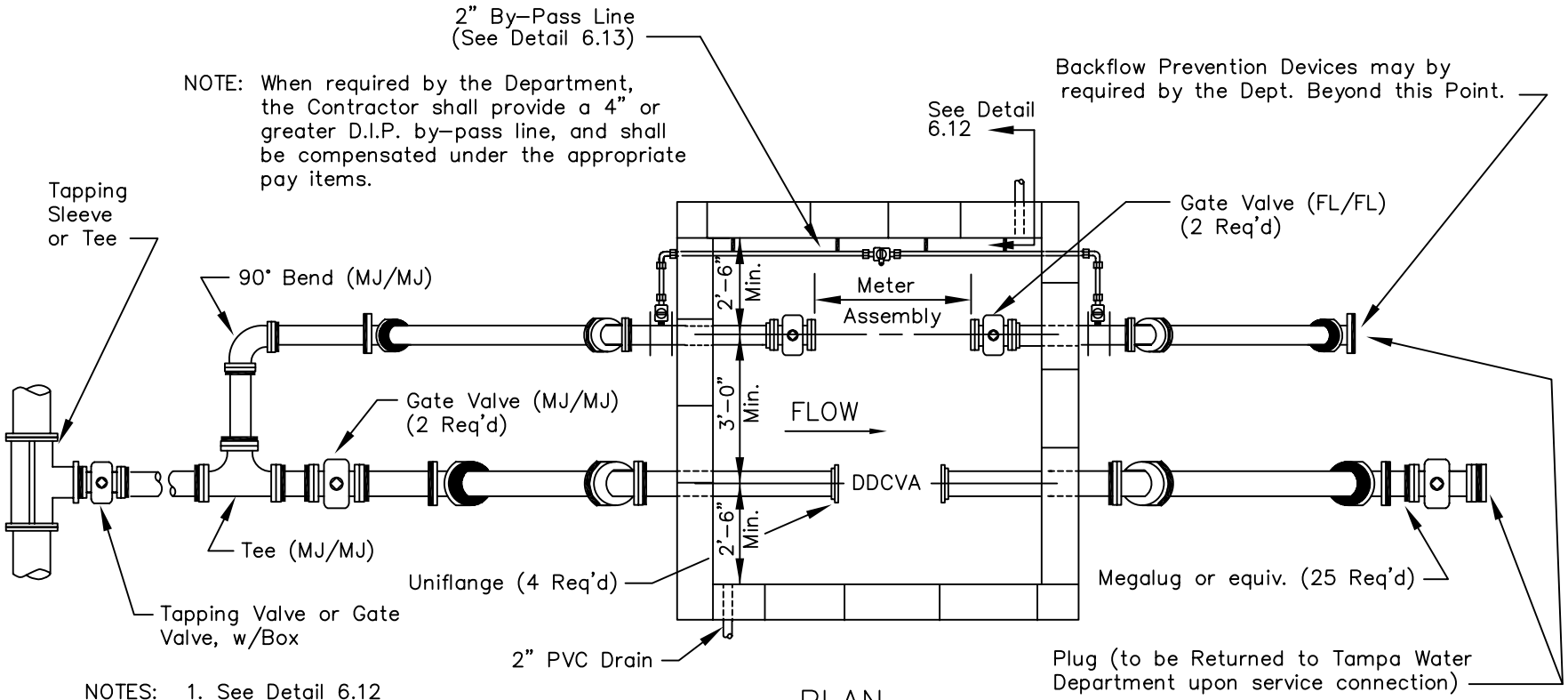

NOTES:
1. See Detail 6.12 for Above Ground Vault Details
2. Minimum Clearance for All Internal and External Fittings Shall be 8" from All Walls

PLAN

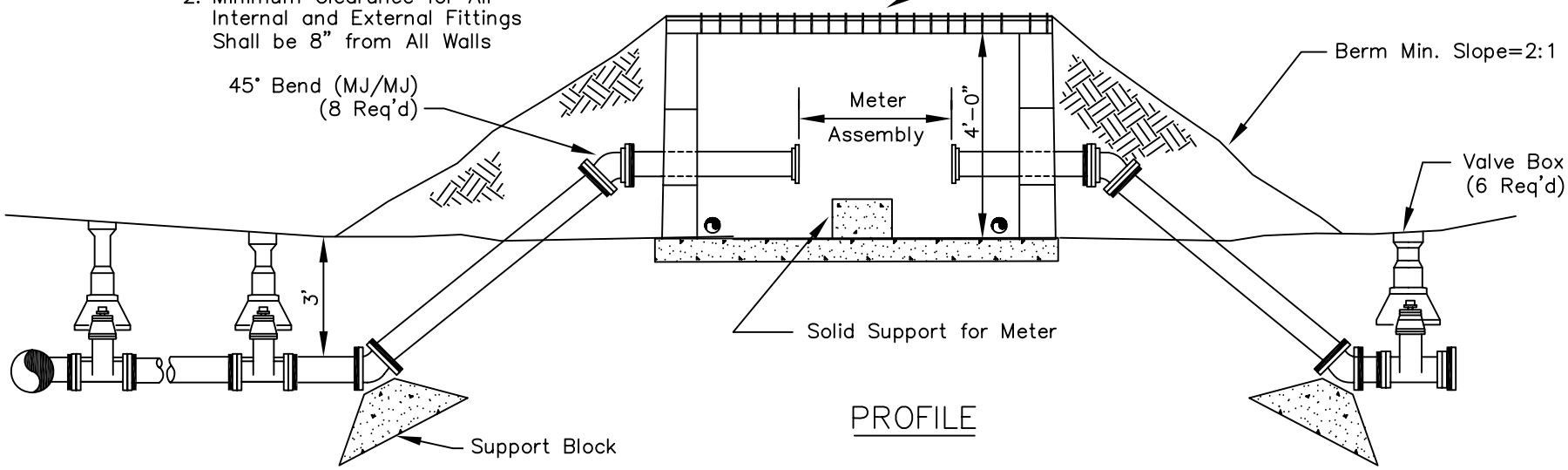

PROFILE

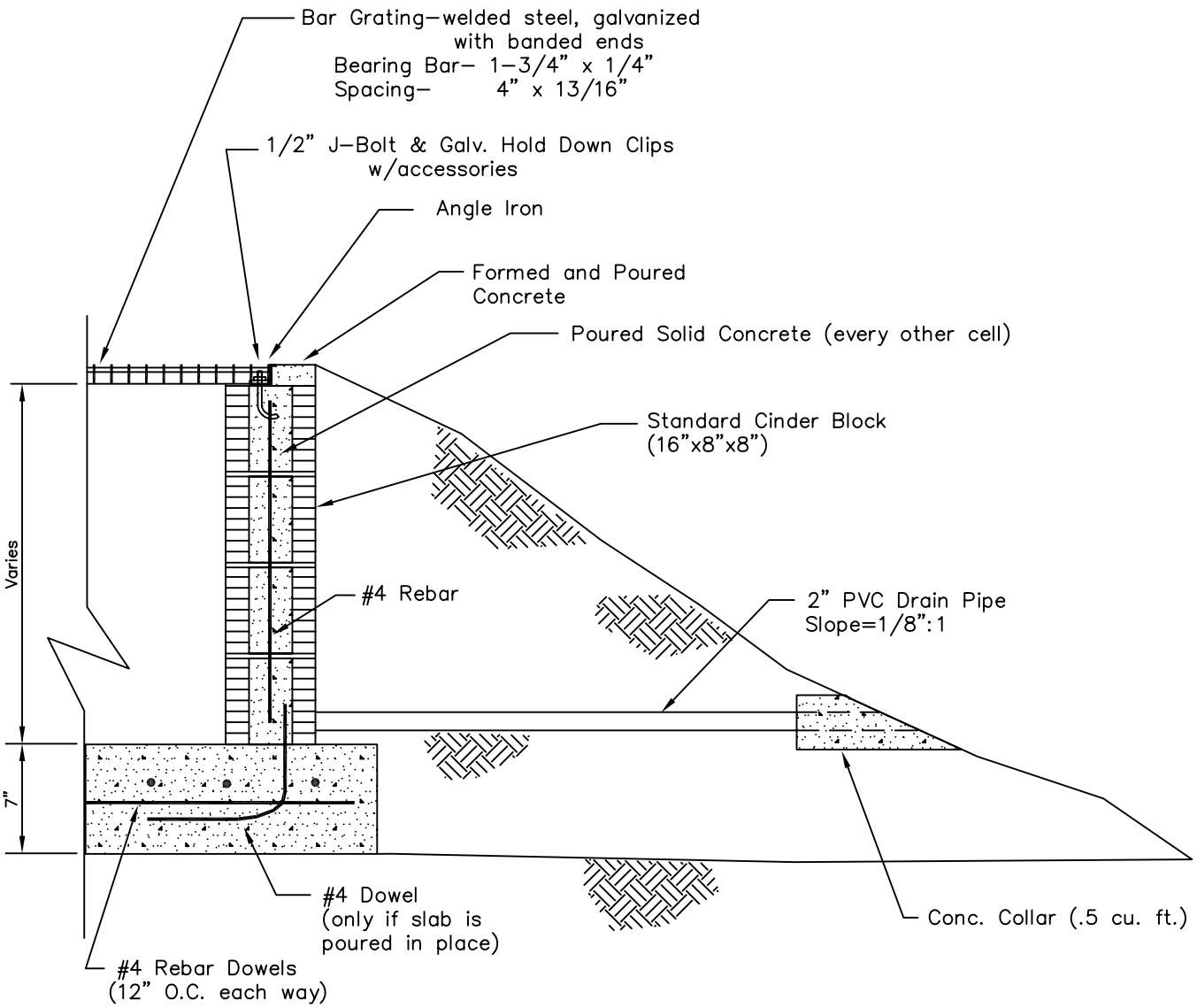

TYPICAL CROSS—SECTION DETAIL

NOTE:
All Concrete Shall Have a Min. Compressive Strength of 3000 psi in 28 Days.

TAMPA WATER DEPARTMENT	APPROVED Sept. 2011	REVISED	ABOVE GROUND VAULT CROSS—SECTION	6.12

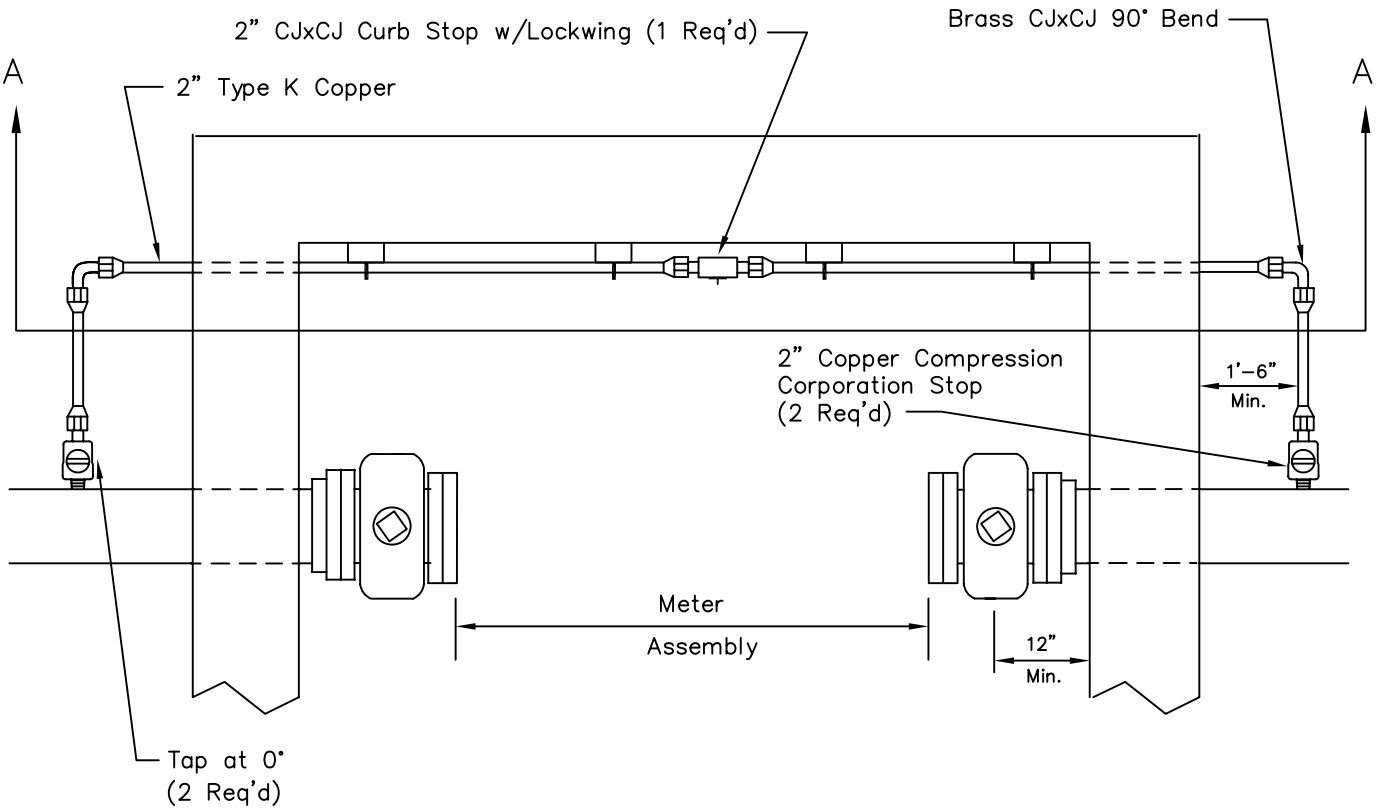

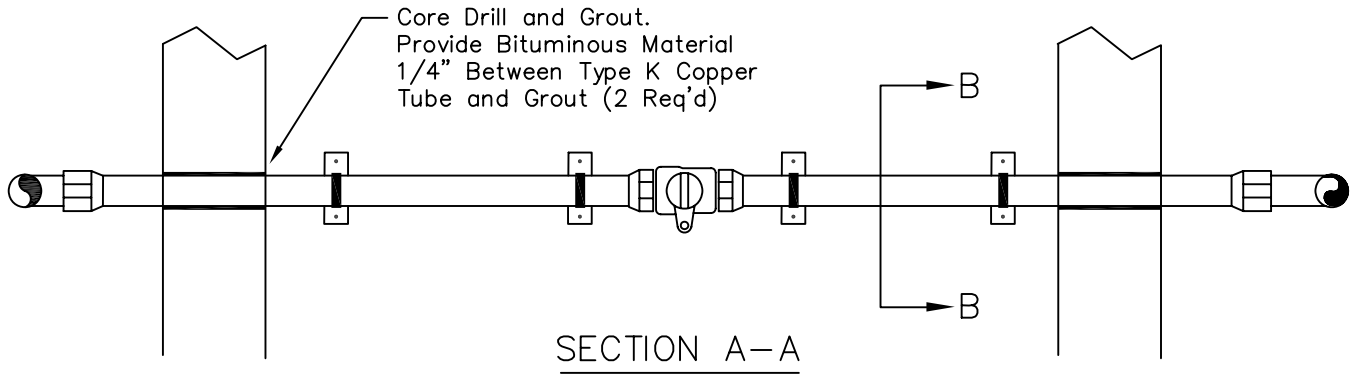

SECTION A–A

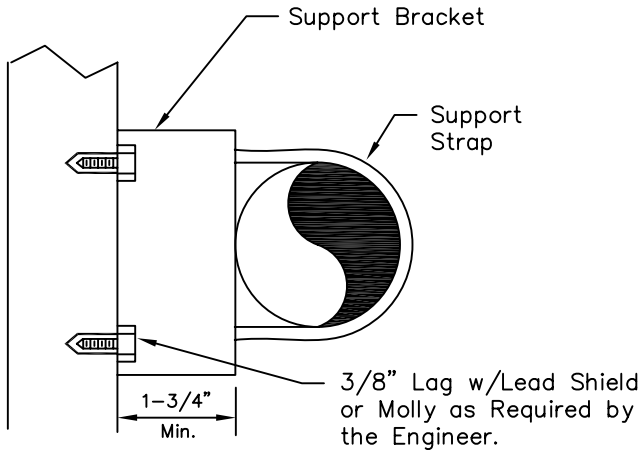

SECTION B–B

TAMPA WATER DEPARTMENT	APPROVED Sept., 2011	REVISED	2" BY-PASS LINE	6.13

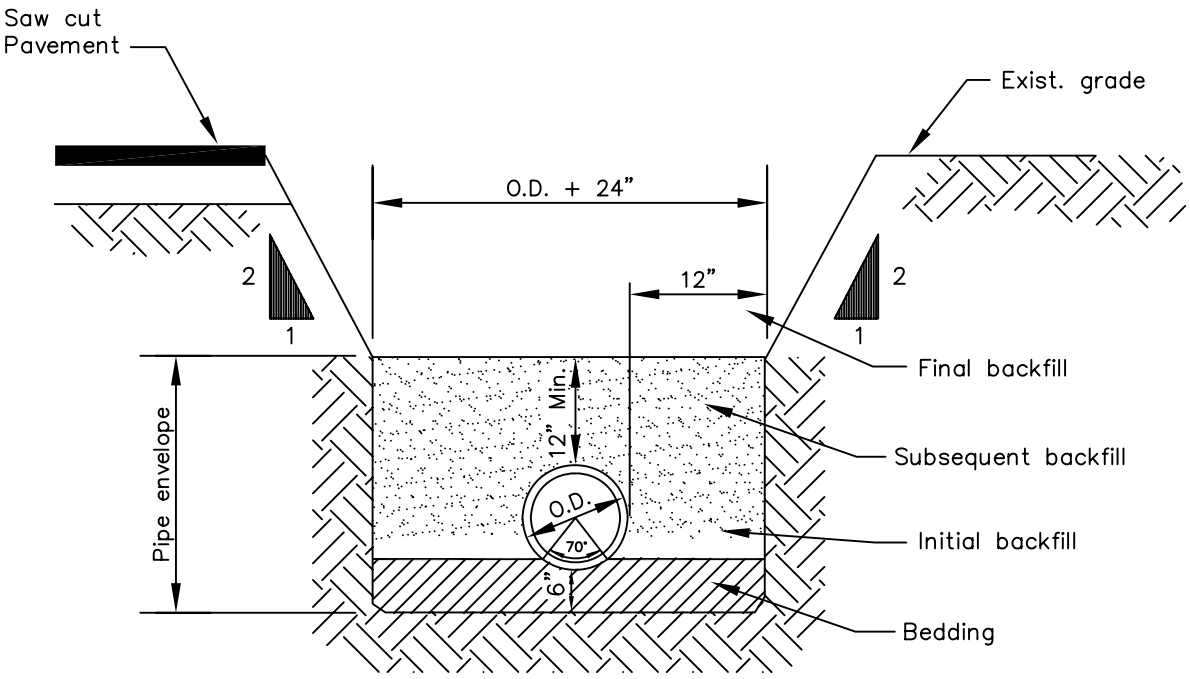

NOTES:

1. Pipe envelope bedding and backfill shall be compacted in 6" loose lifts.
2. Backfill above pipe envelope shall be compacted in 12" loose lifts maximum.
3. Backfill must be compacted to 98% of the maximum modified proctor density in paved and non-paved areas.

TAMPA WATER DEPARTMENT	APPROVED Sept. 2011	REVISED	PIPE BEDDING AND TRENCH FOR PVC PIPE	7.01

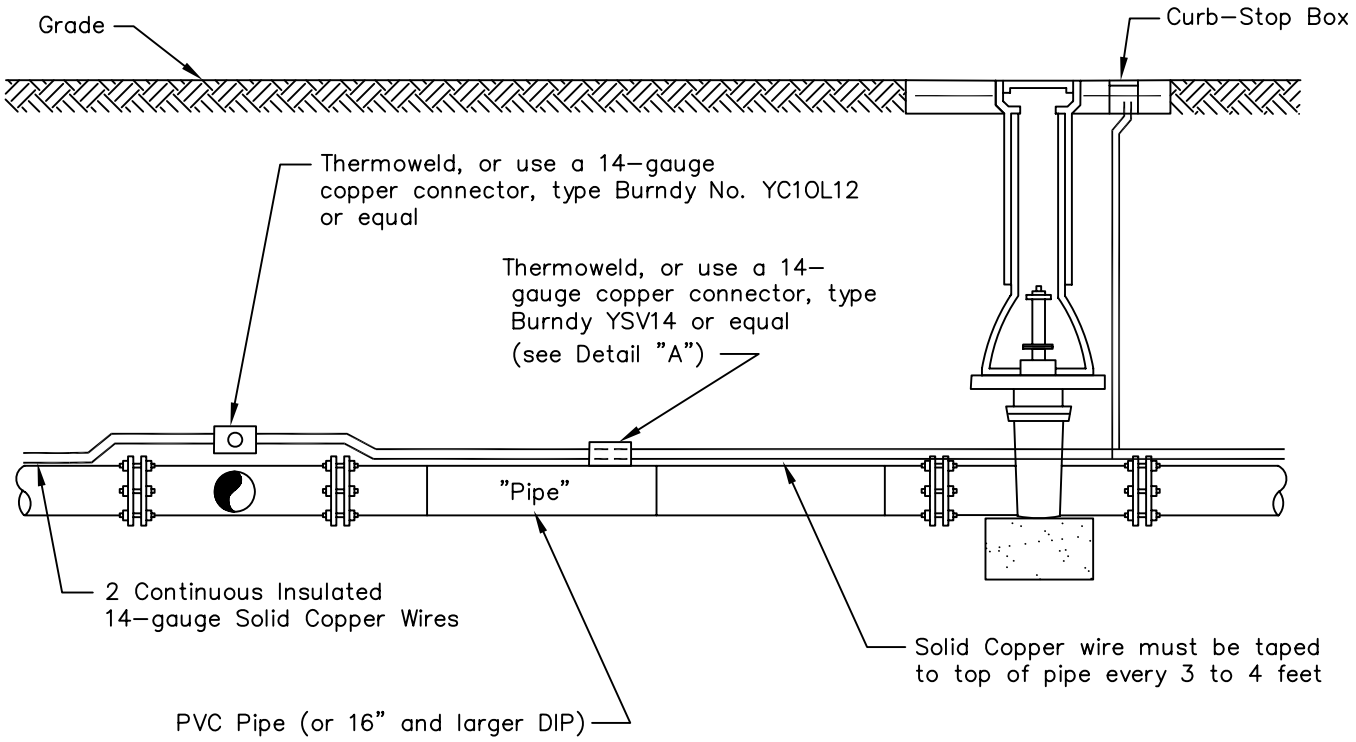

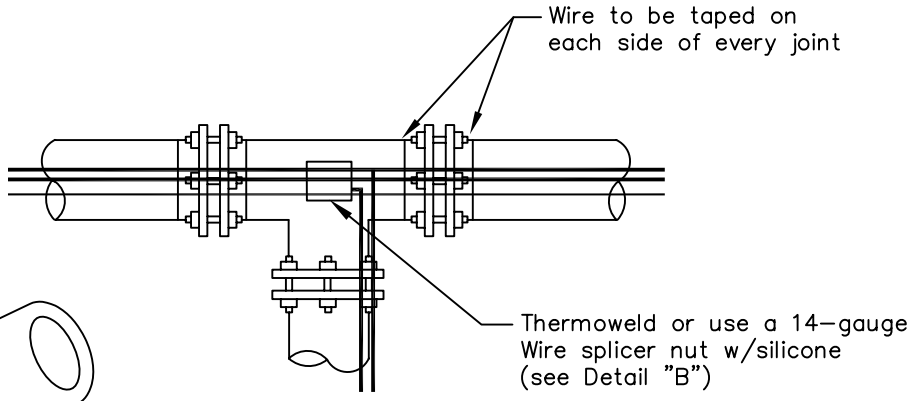

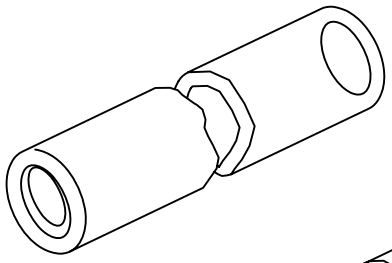

DETAIL "A"

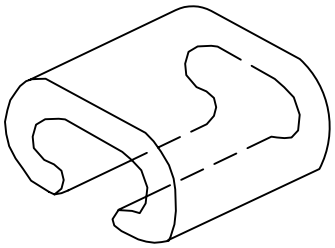

DETAIL "B"

NOTE:

All connections shall be sealed with a bituminous coating for corrosion protection

NTS

TAMPA WATER DEPARTMENT	APPROVED Sept. 2011	REVISED May '09 RNM Sept. 2011 JRD	DOUBLE COPPER TRACER WIRE ON PIPE	7.02

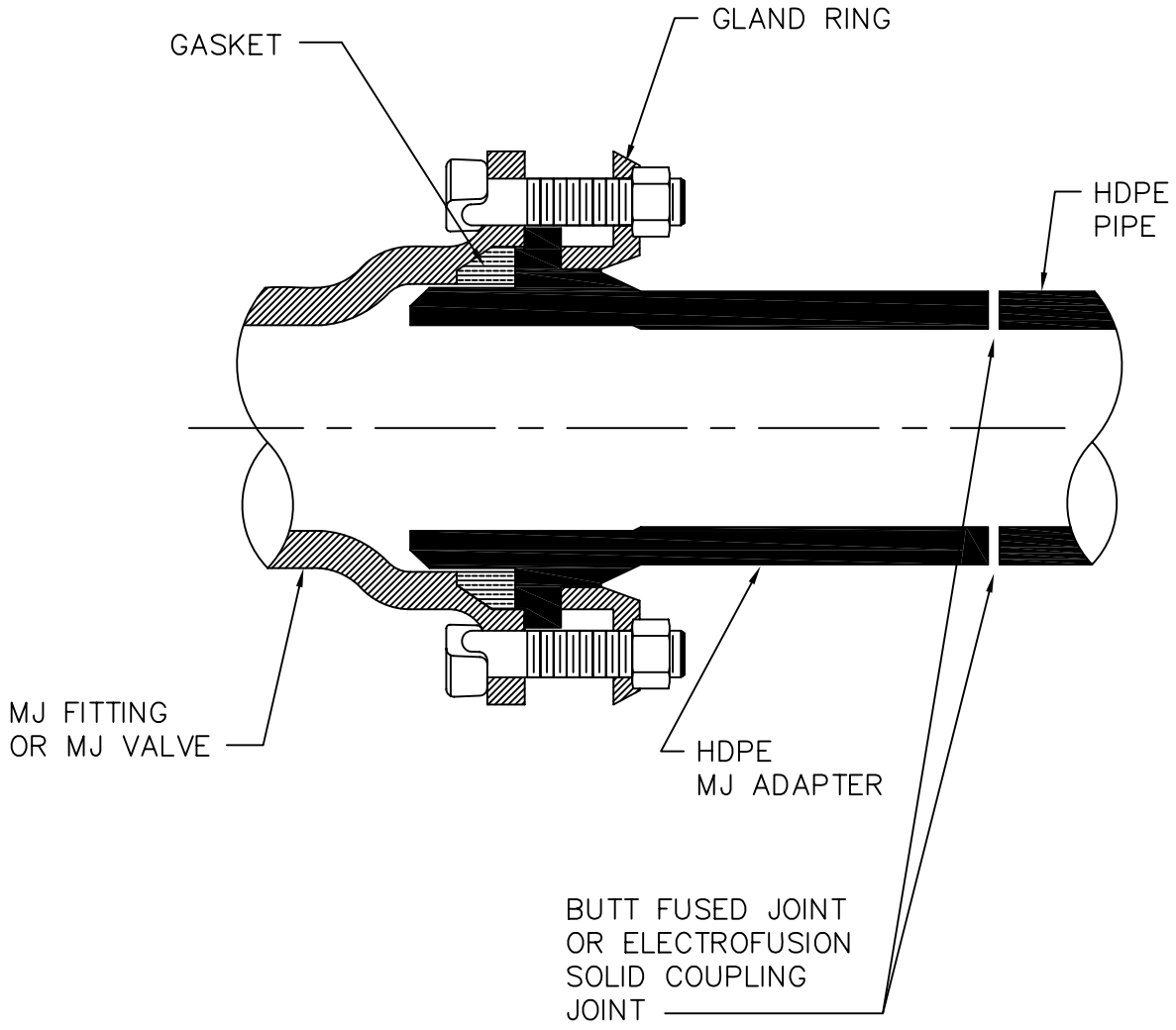

NOTES:

(1) SCHEMATIC SHOWN FOR STANDARD MJ FITTINGS AND GATE VALVES.

(2) BOLT LENGTH SIZED TO ACCOMODATE GLAND RING, MJ ADAPTOR AND MJ FITTING ON MJ VALVE.

TAMPA WATER DEPARTMENT	APPROVED Sept. 2011	REVISED	HDPE PIPE TO MJ FITTING TRANSITION	8.01

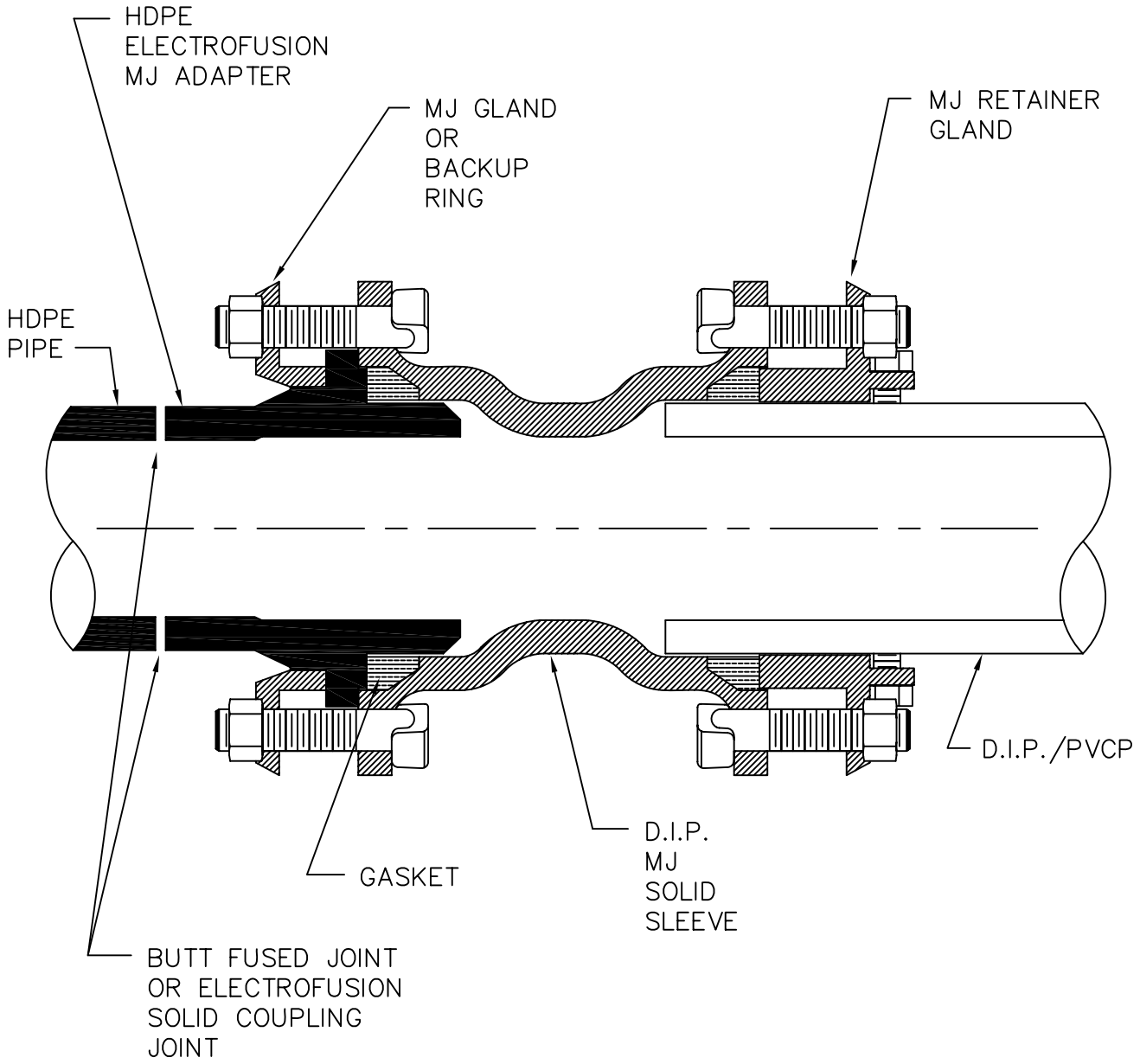

NOTES:

(1) SCHEMATIC SHOWN FOR STANDARD MJ FITTINGS AND SLEEVES.

(2) BOLT LENGTH SIZED TO ACCOMODATE GLAND RING, MJ ADAPTOR AND MJ FITTING ON MJ VALVE.

TAMPA WATER DEPARTMENT	APPROVED Sept. 2011	REVISED	HDPE PIPE TO D.I.P./PVCP SPIGOT–TO SPIGOT–CONNECTION	8.02

TAMPA WATER DEPARTMENT

APPROVED Sept. 2011

REVISED

"TAPPED" CONNECTION FOR <4" WATER MAIN TO HDPE WATER MAIN

8.03

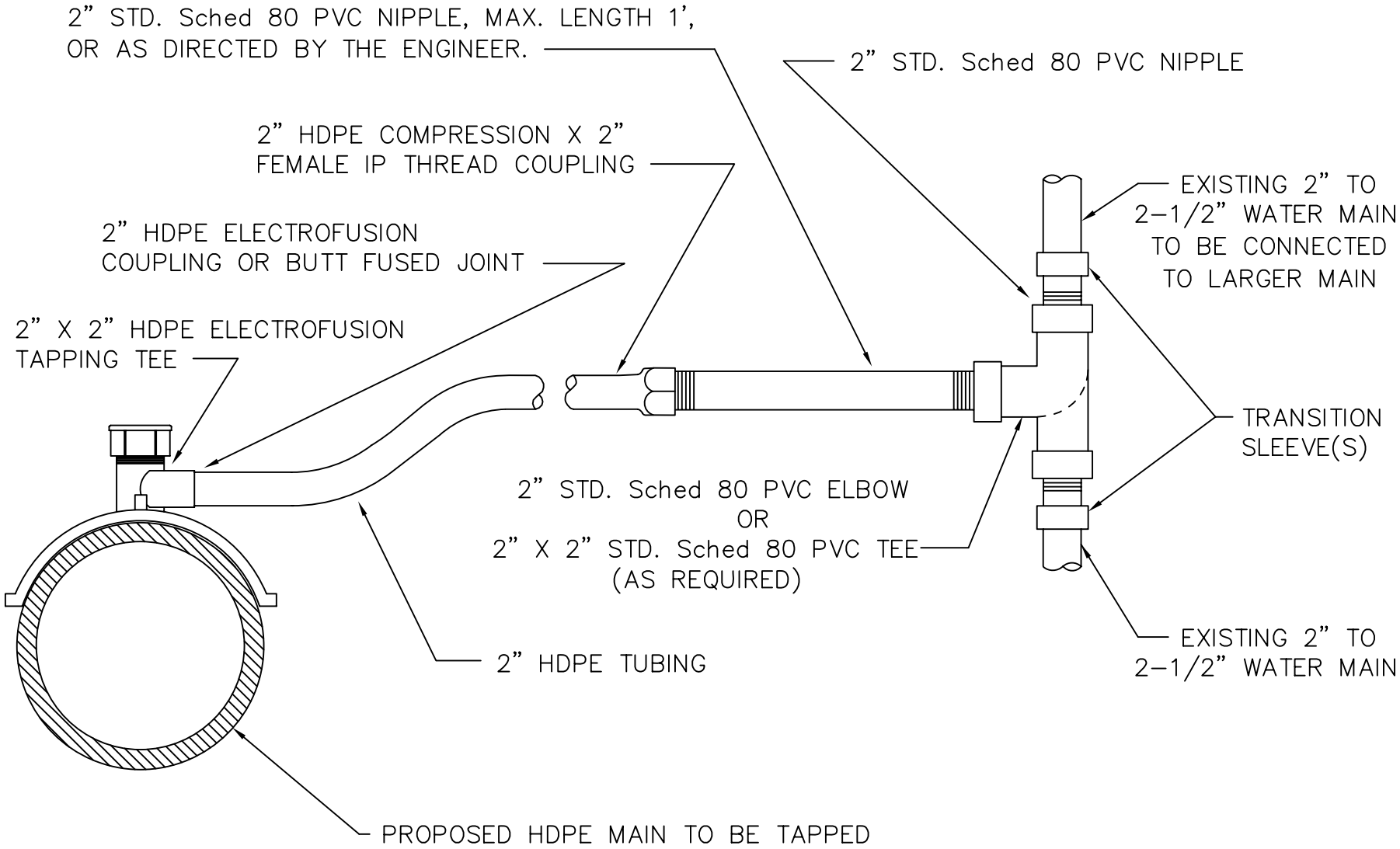

NOTE: ALL CONNECTIONS NOT COVERED BY DETAIL 8.08 SHALL BE INSTALLED IN A MANNER ACCEPTABLE TO THE ENGINEER.

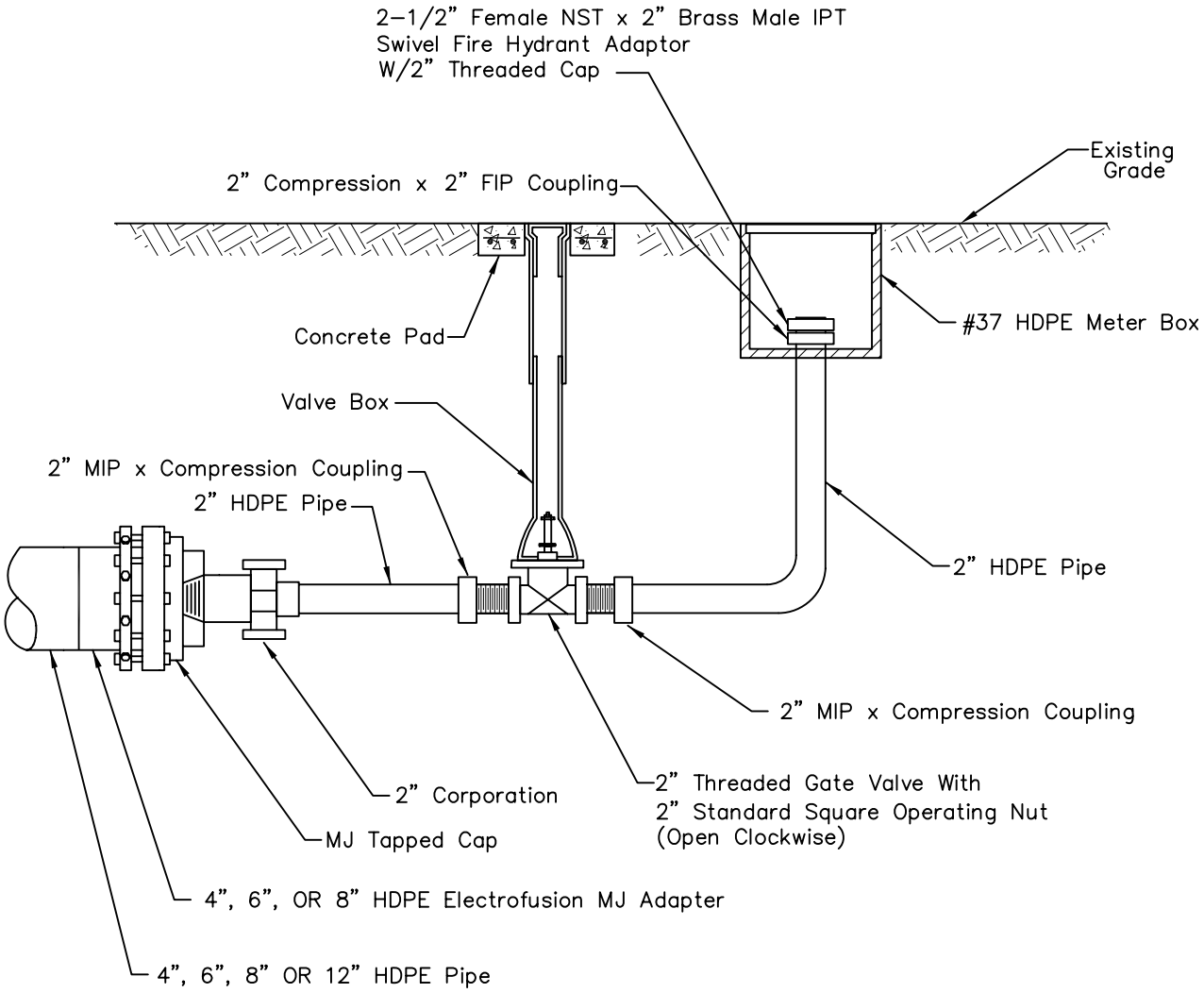

BLOW-OFF FOR ≥ 4" MAINS

No galvanized pipe or fittings allowed
Schedule 80 PVC is allowed

N.T.S.

TAMPA WATER DEPARTMENT	APPROVED Sept. 2011	REVISED	BLOW–OFF VALVE ASSEMBLY ON ≥ 4" HDPE PIPE	8.04

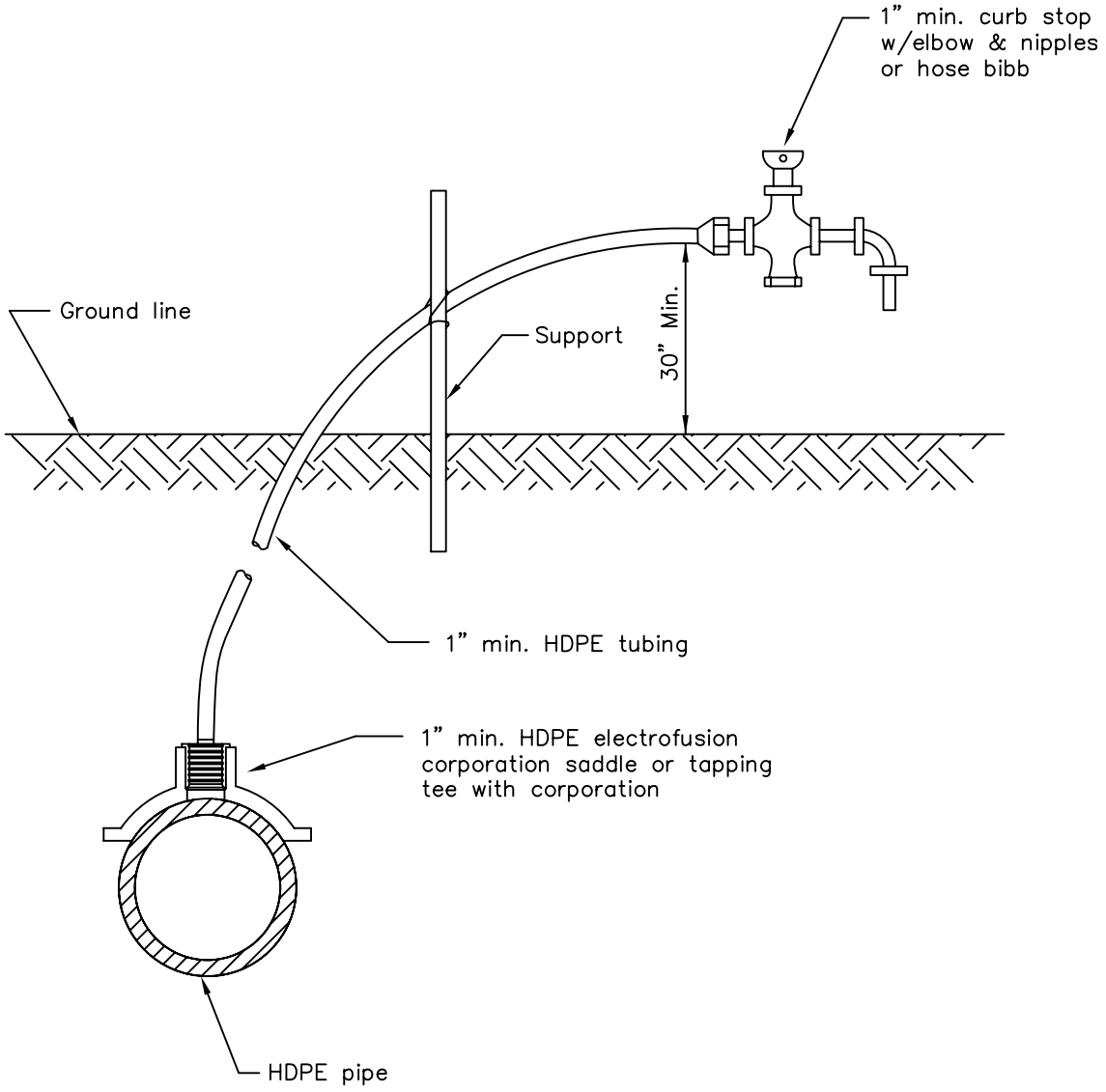

Notes:

1. Water outlet shall be held up off the ground so as not to interfere with the sampling process.

2. Corporation stop to be removed and plugged after operation.

TAMPA WATER DEPARTMENT	APPROVED Sept. 2011	REVISED	TEMPORARY SAMPLE TAP INSTALLATION W/HDPE PIPE	8.05

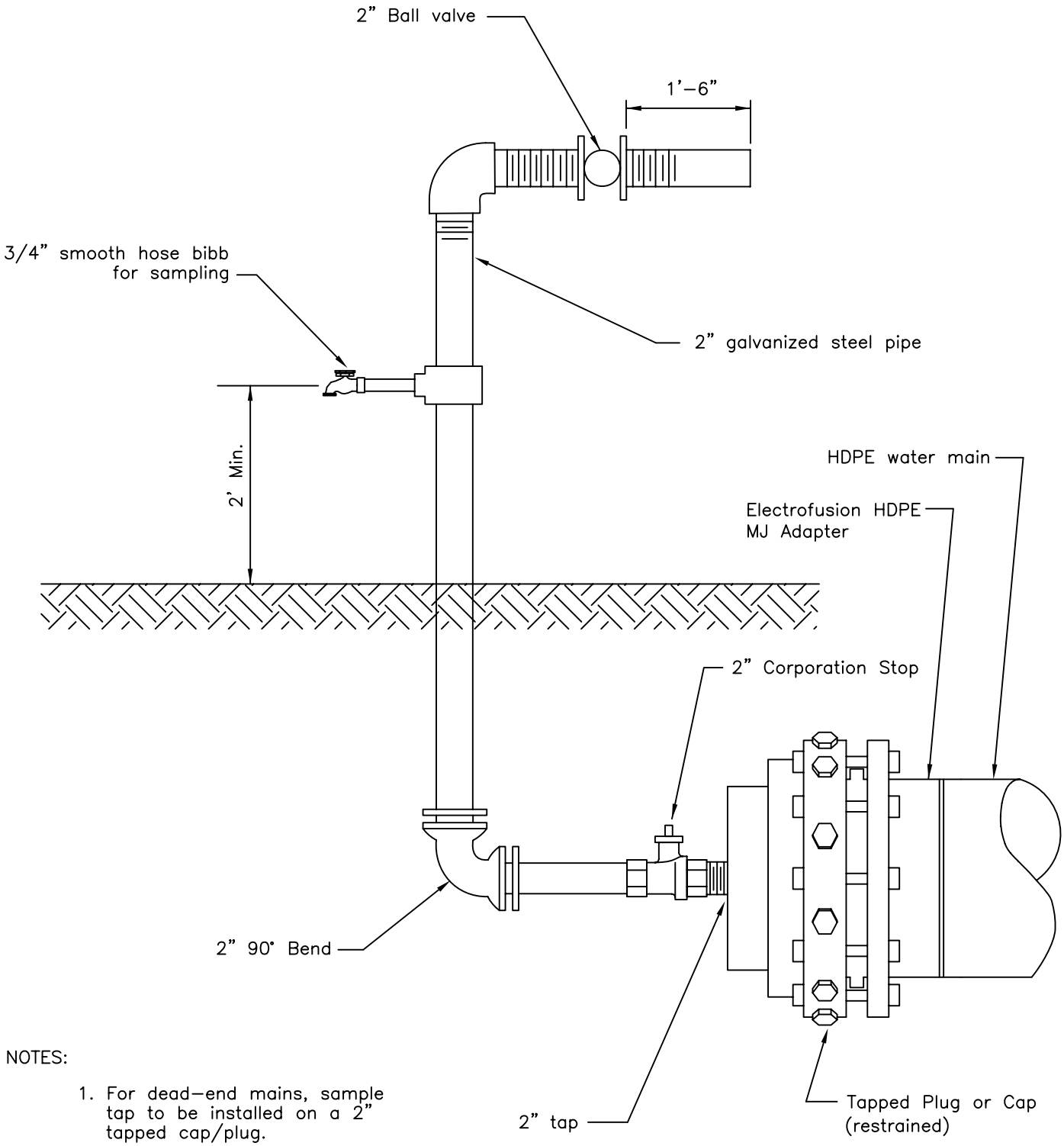

NOTES:

1. For dead-end mains, sample tap to be installed on a 2" tapped cap/plug.
2. Flushing/sampling arrangement to be removed after disinfection of main line.
3. After operation complete, install brass plug at corporation stop.

TAMPA WATER DEPARTMENT	APPROVED Sept. 2011	REVISED	TEMPORARY SAMPLE TAP INSTALLATION FOR END OF LINE W/HDPE PIPE	8.06

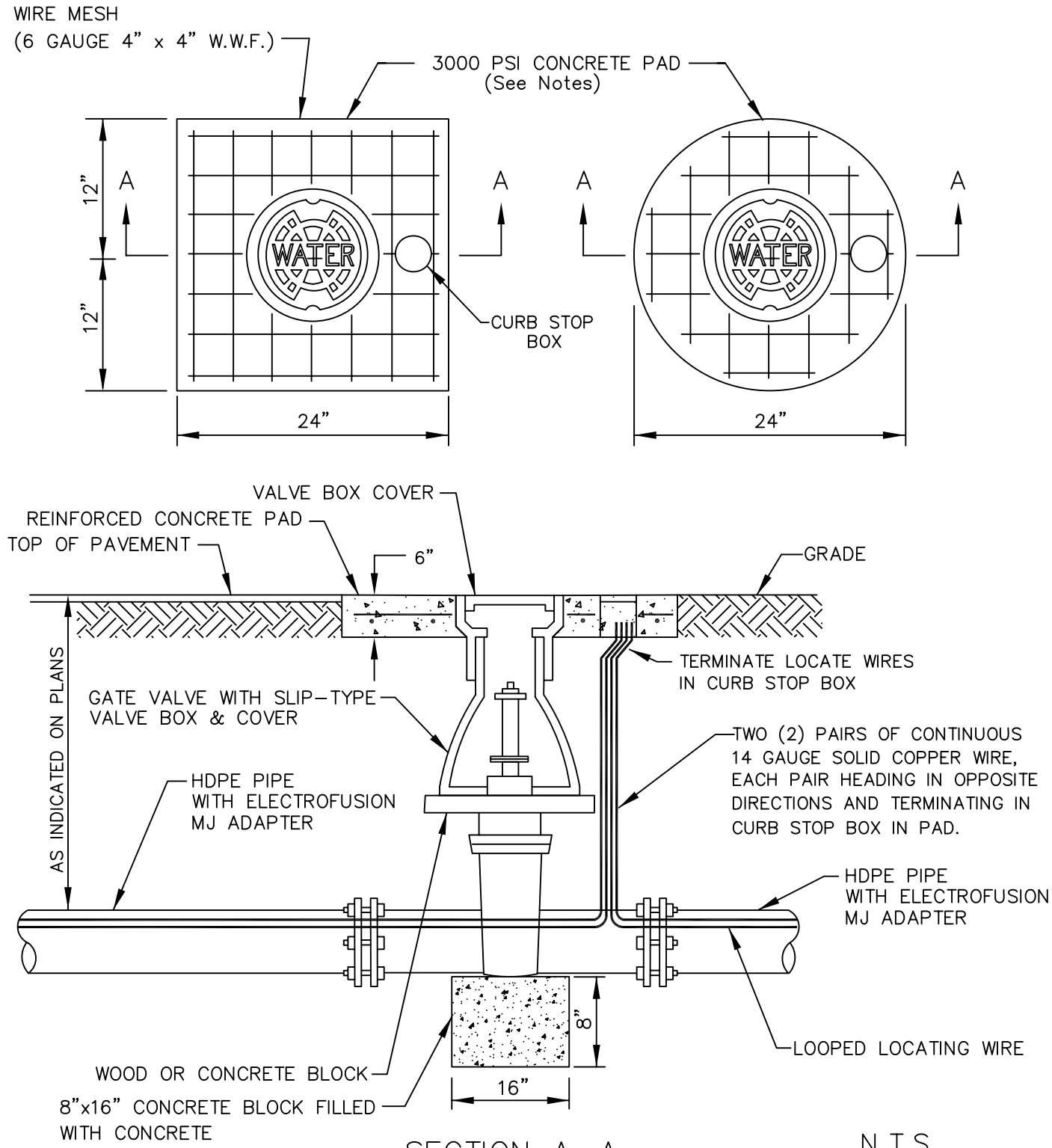

SECTION A–A

N.T.S.

Notes :

1. Circular or square concrete pad required for all valve box installations.
2. Cast iron valve boxes shall be firmly supported and centered and plumb over the operating nut of the valve. Valve box cover shall be flush with the surface of finished pavement or grade or at such other level as may be directed by the Department.
3. "Blue" Water Valve locate markers required for all valve installations.

TAMPA WATER DEPARTMENT	APPROVED Sept. 2011	REVISED	VALVE SETTING W/HDPE PIPE	8.07

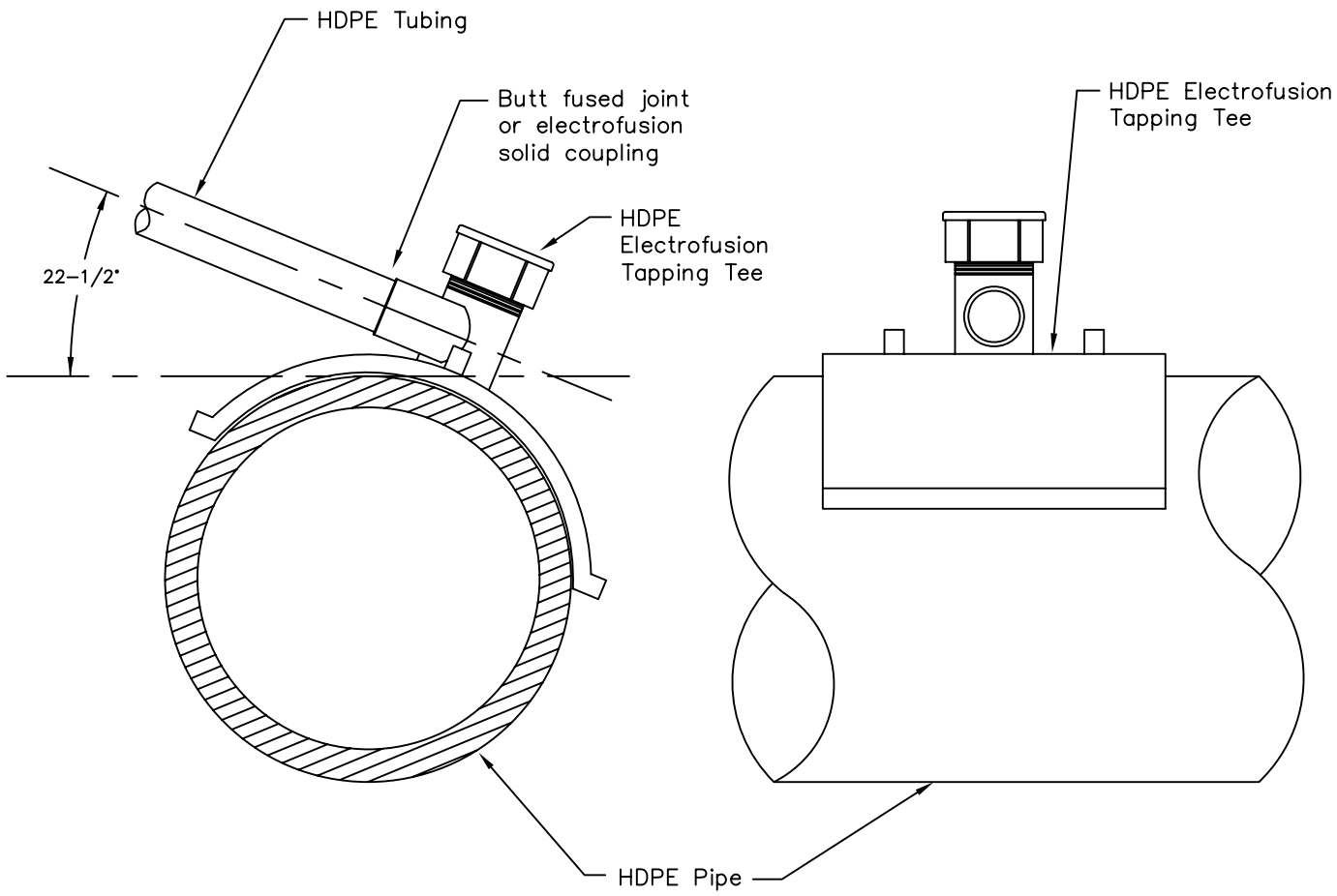

SECTION

SIDE VIEW

TAMPA WATER DEPARTMENT	APPROVED Sept. 2011	REVISED	TAPPING DETAIL FOR 1" & 2" SERVICE W/HDPE PIPE	8.08

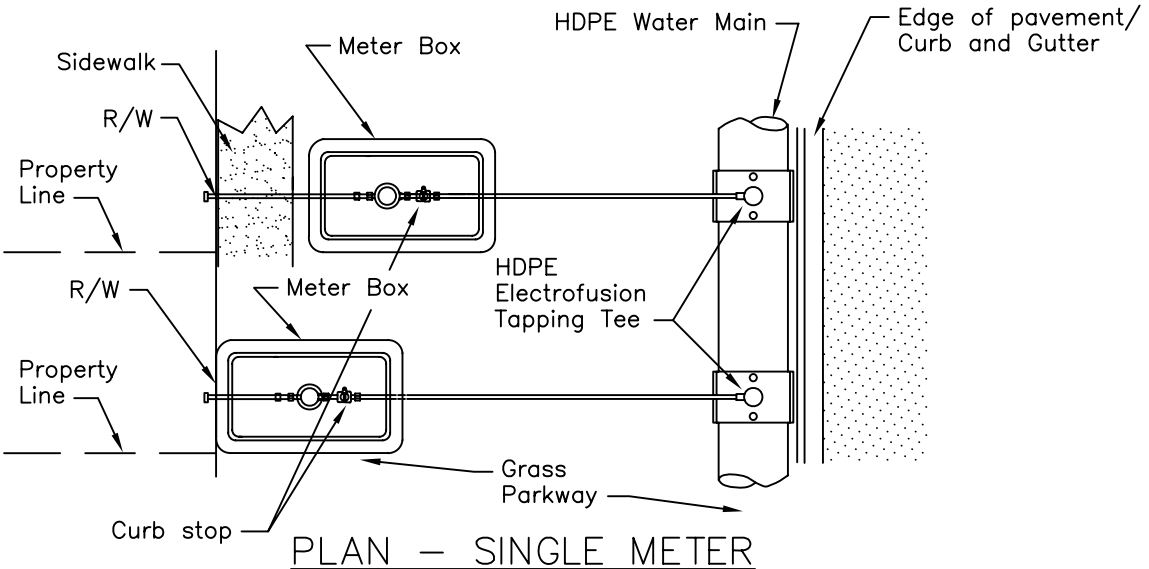

PLAN – SINGLE METER

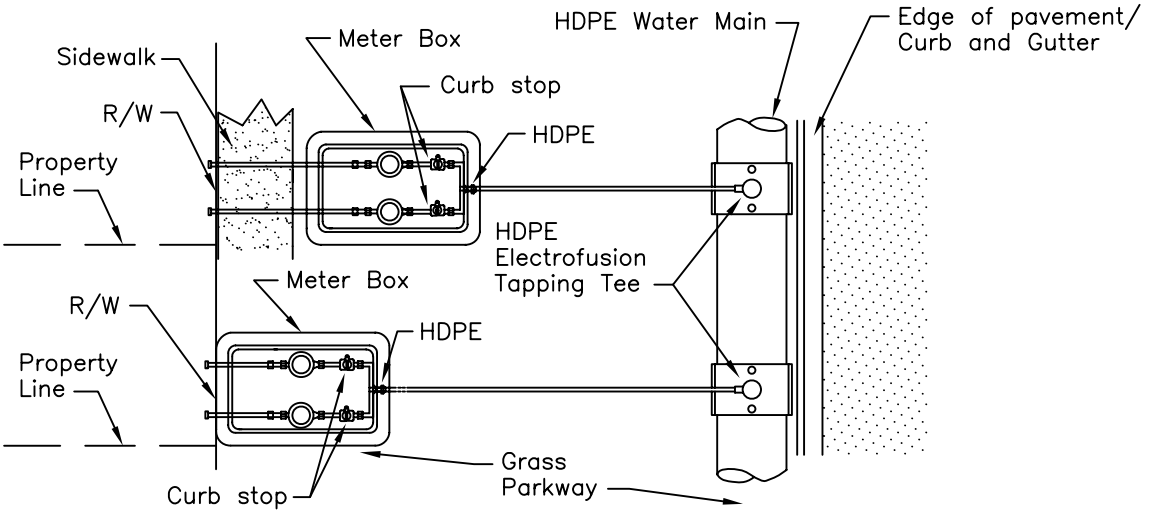

PLAN – DUAL METER

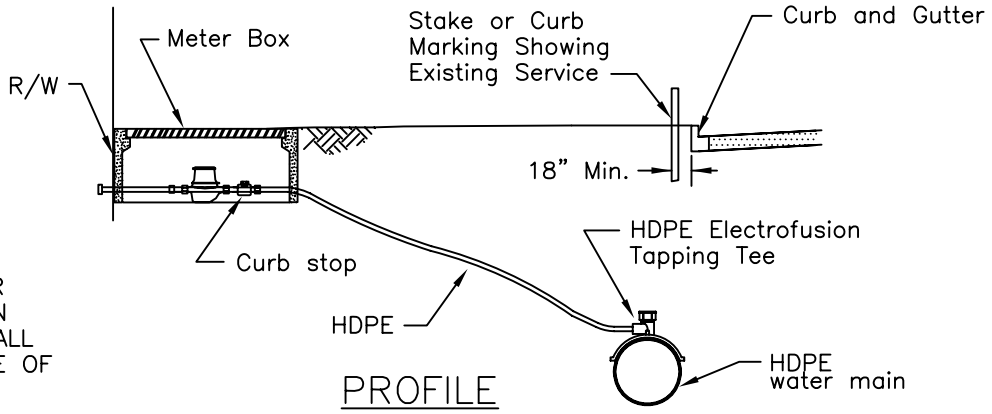

PROFILE

DO NOT INSTALL METER WITHIN SIDEWALK. WHEN SIDEWALK EXISTS, INSTALL METER ON STREET SIDE OF SIDEWALK OR WHERE DIRECTED BY ENGINEER.

SINGLE METER SIZE (inches)	SERVICE LINE SIZE (inches) (0–15')
3/4	1
1	1
1–1/2	2
2	2

DUAL METER SIZE (inches)	SERVICE LINE SIZE (inches) (0–15')
3/4	2
1	2
1–1/2	N/A
2	N/A

TAMPA WATER DEPARTMENT	APPROVED Sept. 2011	REVISED	SINGLE & DUAL METERED SERVICE – SHORT SIDE 3/4", 1", 1–1/2" AND 2" W/HDPE PIPE	8.09

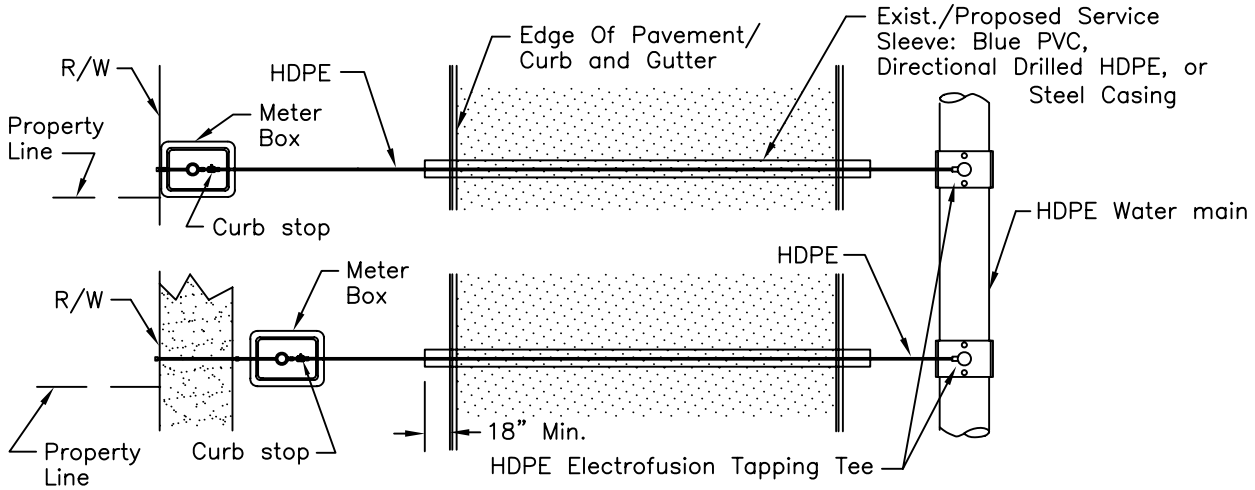

PLAN VIEW – SINGLE METER

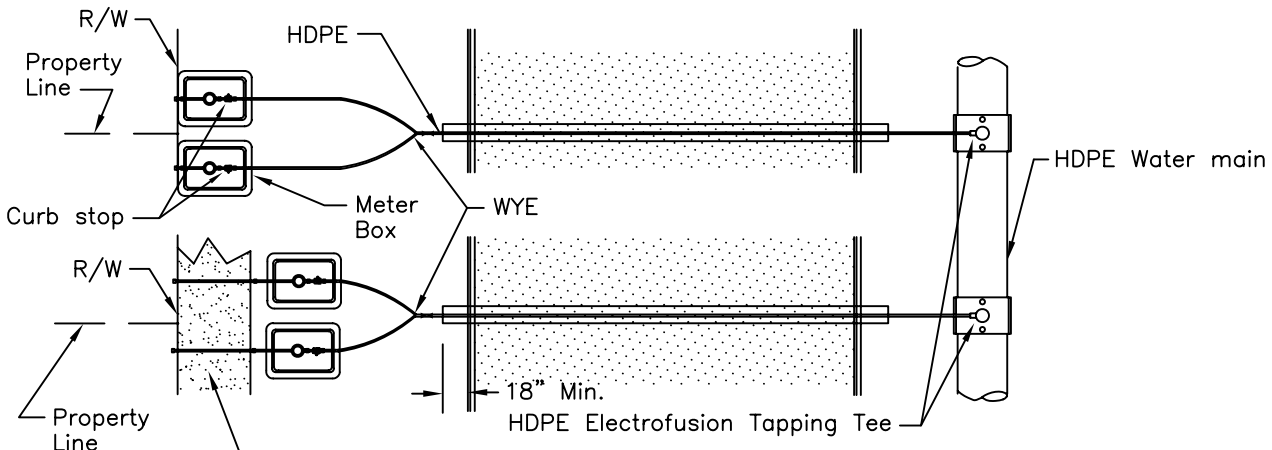

PLAN VIEW – DUAL METER

DO NOT INSTALL METER WITHIN SIDEWALK. WHEN SIDEWALK EXISTS, INSTALL METER ON STREET SIDE OF SIDEWALK OR WHERE DIRECTED BY ENGINEER.

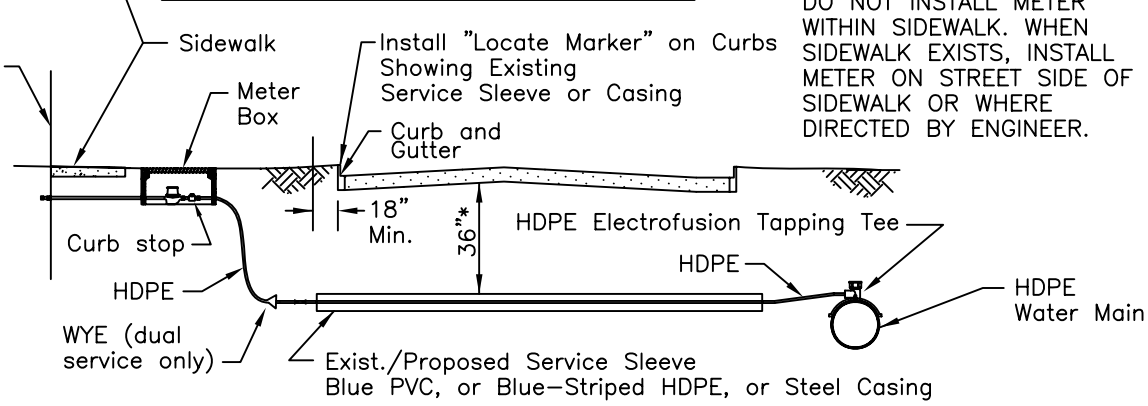

PROFILE VIEW (TYP.)

CASING SPECIFICATION:

1. If pushed–SCH 40 steel pipe (min.)
2. If layed in open trench–SCH 40 steel pipe or SCH 80 PVC solvent weld pipe.

*Or greater, if required ROW Controlling Agency

**Line size, applicable for 2" D.D.C.V.s

SINGLE METER SIZE (inches)	SERVICE LINE SIZE (inches) (>15'–80')	(>80'–150')	CASING SIZE (inches)
3/4	1	2	2 / 4
1	2	2	4
1–1/2	2	2	4
2**	4" D.I.P.	4" D.I.P.	12

DUAL METER SIZE (inches)	SERVICE LINE SIZE (inches) (>15'–80')	(>80'–150')	CASING SIZE (inches)
3/4	2	2	4
1	2	4" D.I.P.	4 / 12
1–1/2	N/A	N/A	N/A
2	N/A	N/A	N/A

(Feet refer to distance from water main to meter)

TAMPA WATER DEPARTMENT	APPROVED Sept. 2011	REVISED	SINGLE & DUAL METERED SERVICE – LONG SIDE 3/4",1", 1–1/2" AND 2" W/HDPE PIPE	8.10

City to provide neighborhood symbol decal

Project Manager:
Harry Glenn
Water Dept. Chief Construction Engineer
City of Tampa

Phone: (813) 635-3432
Email: harry.glenn@tampagov.net

contractor name here

City of Tampa Improvement Project

brief project description (2 – 3 lines)

total appropriated cost (round off) – duration of construction

Scheduled for completion in (date)

supplemental project description (max. 2 lines)

For information, please call : (813) 635-3400

DETAIL 1

NOTES:
1. Letter Color : Black Font : Times New Roman, bold
2. Background Color (front, back and edges) : Benjamin Moore Paint, Natural Wicker OC–1.
3. Post Color: Black
4. Contractor shall verify text with the City prior to sign fabrication.

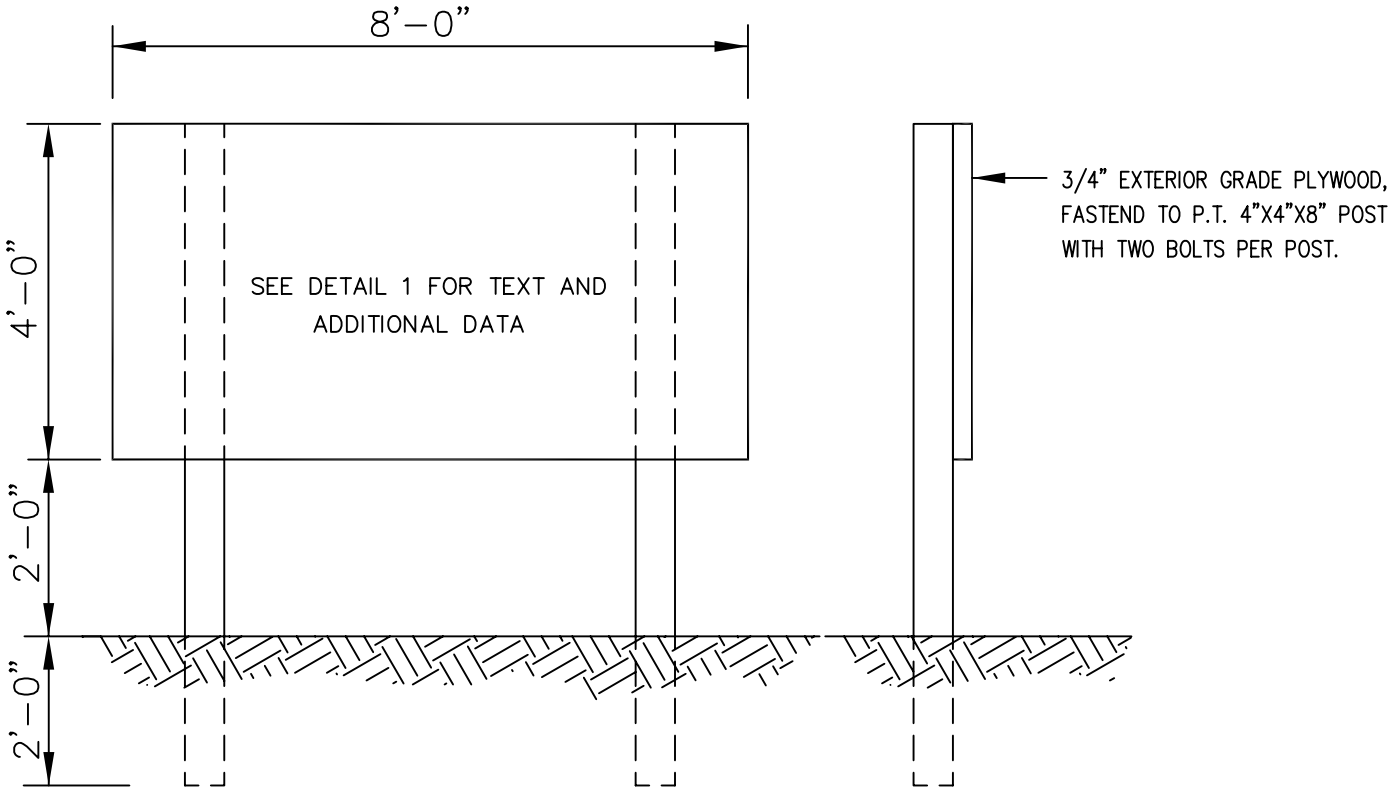

DETAIL 2

NOT TO SCALE

TAMPA WATER DEPARTMENT	APPROVED Sept, 2011	REVISED JRD 4/09	CITY OF TAMPA PROJECT SIGN	9.01

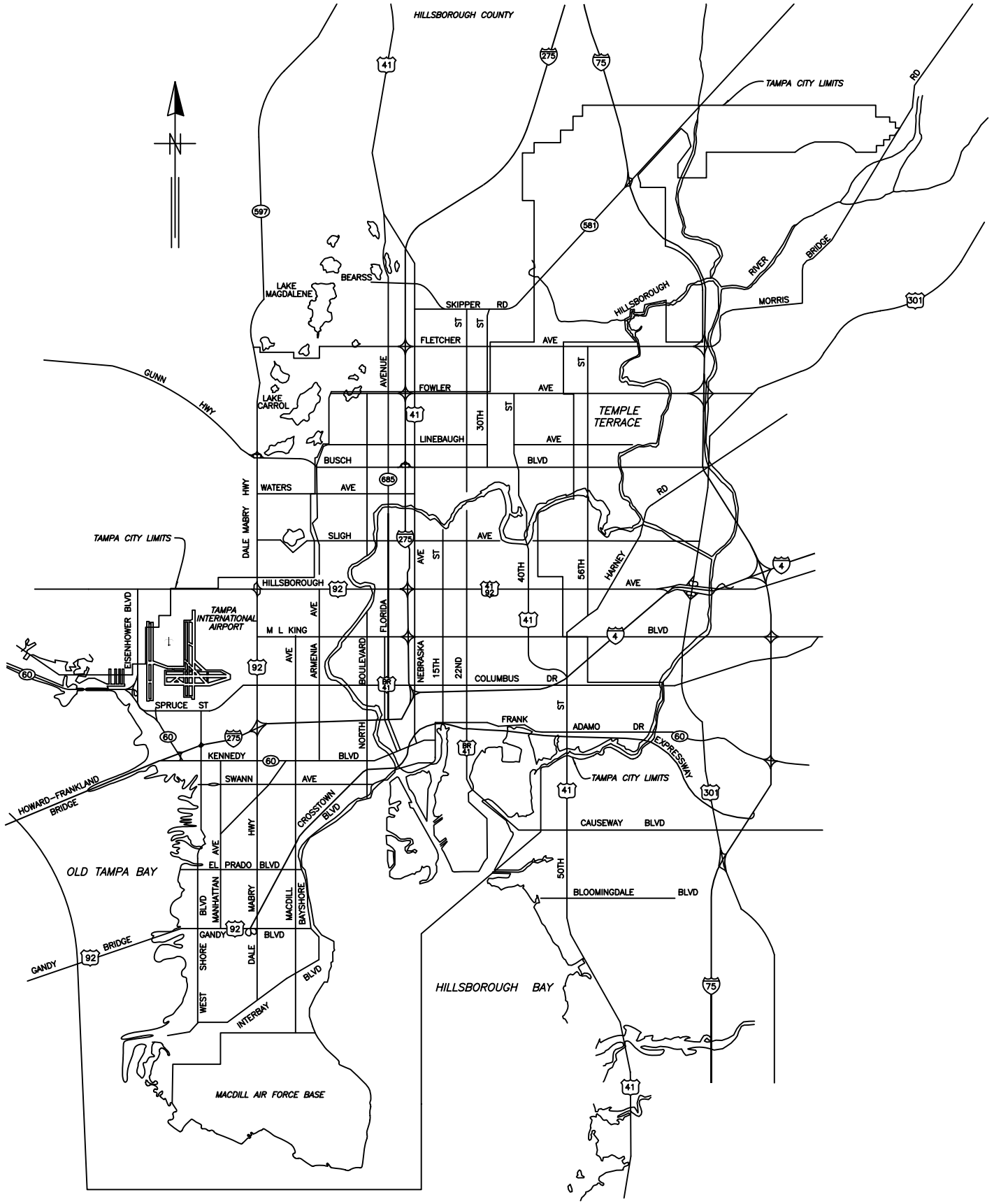

1 = 1

CITY of TAMPA

STORMWATER DEPARTMENT

STANDARD DETAILS

No.	DATE	REVISIONS	No.	DATE	REVISIONS
3			6		
2			5		
1	12/09/04	MOVED INDEX TO SHEET 2	4		

DES: Storm
DRN: Storm
CKD:
DATE: 7/03

CITY of TAMPA
STORMWATER DEPARTMENT

COVER SHEET

W.O.

SHEET 1 OF 30

CITY OF TAMPA STORMWATER DEPARTMENT
STANDARD DETAILS GENERAL NOTES

1. ALL DRAINAGE STRUCTURES (MANHOLES, INLETS, OUTFALL STRUCTURES AND OTHERS) SHALL INCLUDE A 6" THICK COMPACTED #57 AGGREGATE FOUNDATION, WRAPPED COMPLETELY WITH FILTER FABRIC MEETING FDOT STANDARD SPECIFICATIONS 441-2.3

2. ALL PIPE JOINTS (ROUND, ELIPTICAL AND BOX CULVERTS) SHALL BE WRAPPED COMPLETELY WITH FILTER FABRIC MEETING FDOT STANDARD SPECIFICATIONS 441-2.3. FABRIC SHALL EXTEND ONE FOOT ONTO EACH PIPE SECTION (JOINT) AND SHALL OVERLAP A MINIMUM OF ONE FOOT CIRCUMFERENTIALLY. FABRIC SHALL BE HELD IN PLACE WITH RUST-PROOF METAL STRAPPING.

CITY OF TAMPA STANDARD DETAILS	
SCHEDULE OF CASTINGS	
STURCTURE TYPE	
All Curb Inlets (Cover)	USF 1190 (85 lb.)
All Curb Inlets (Ring)	USF 1190
All Manholes (Cover)	USF Type AO (160 lb.)
All Manholes (Standard Ring)	USF 575
All Manholes (Inverted Ring)	USF 1175
Type T Grate Inlets	USF 6289
Type E Grate Inlets	USF 6286
Type H grate Inlets	USF 6288
Grate Seats	USF 7100
NOTES:	
1. All castings are as above or equal.	
2. All castings outside City Of Tampa ROW or easements shall not include the words "City Of Tampa" nor the ship logo.	
3. Manhole covers shall include the text "Stormwater" as shown in the Standard Drawing.	

INDEX

Sheet No.	Description
1	Cover
2	Index & General Notes
3 - 4	Type 1 Inlet
5 - 7	Type 2 Inlet
8 - 10	Type 3 Inlet
11	Type 1 Inlet Modified
12 - 13	Type BS-1 Curb Inlet
14 - 15	Type BV-1 Curb Inlet
16 - 17	Type BR-2 Curb Inlet
18 - 19	Type BR-1 Curb Inlet
20	Standard Inlet Details
21	Type "T" & "E" Grate Inlet
22	Type "H" Grate Inlet
23	Guidelines For Conflict Manholes
24	Miscellaneous Details (Pipe Joints & Jackets)
25	Miscellaneous Details (Collars & End Gaurds)
26	Open Bottom Inlet (Type "E")
27	Temproary Force Main & Pumping Standards
28	Miscellaneous Details (Manhole Castings, Etc.)
29	Payment limits & Jacked Crossing Details
30	Pipe Bedding Details

1 = 1

No.	DATE	REVISIONS	No.	DATE	REVISIONS
3			6		
2			5		
1	12/09/04	NEW SHEET	4		

DES: Storm
DRN: Storm
CKD:
DATE: 7/03

CITY of TAMPA
STORMWATER DEPARTMENT

INDEX & GENERAL NOTES

W.O.

SHEET 2 OF 30

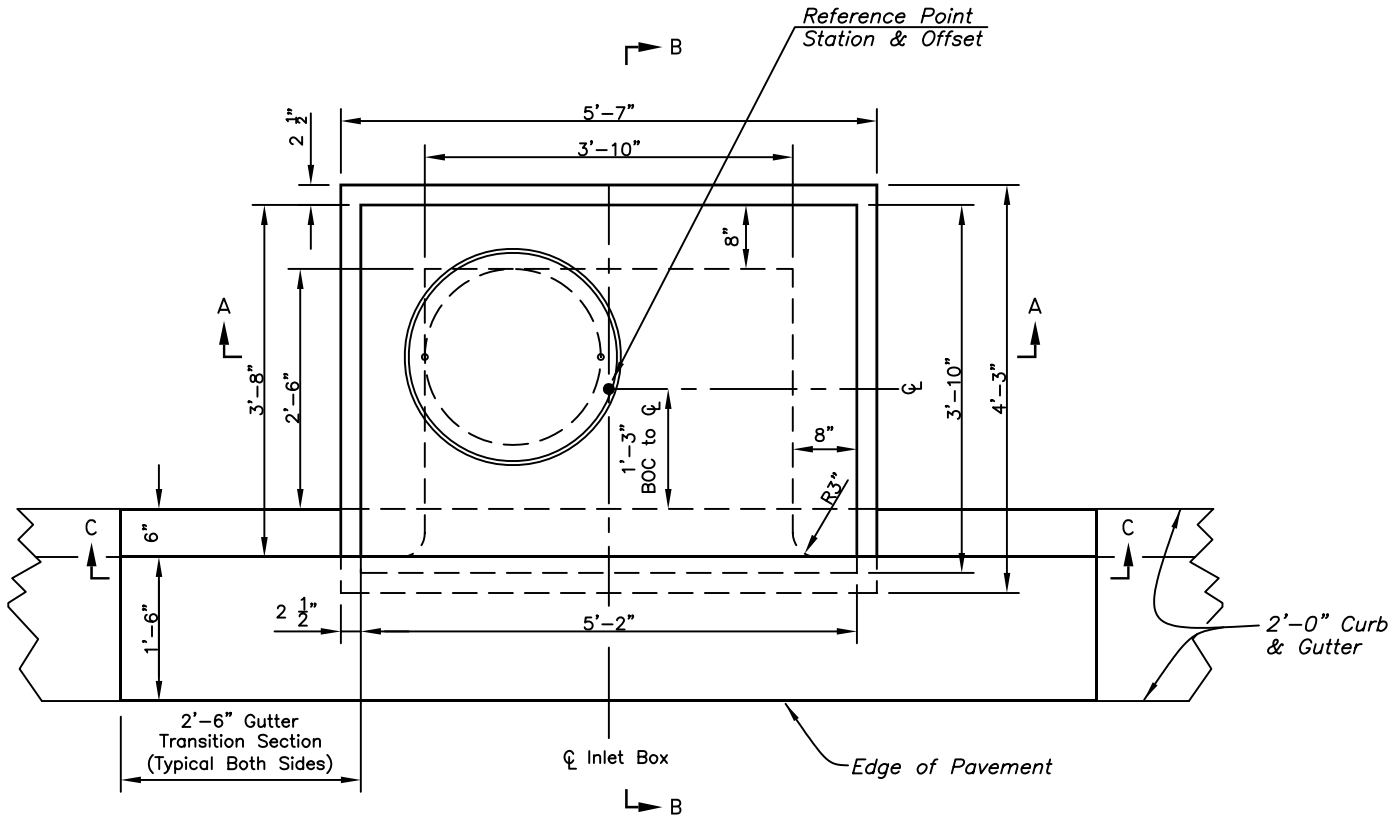

PLAN

Scale: 1/2" = 1'-0"

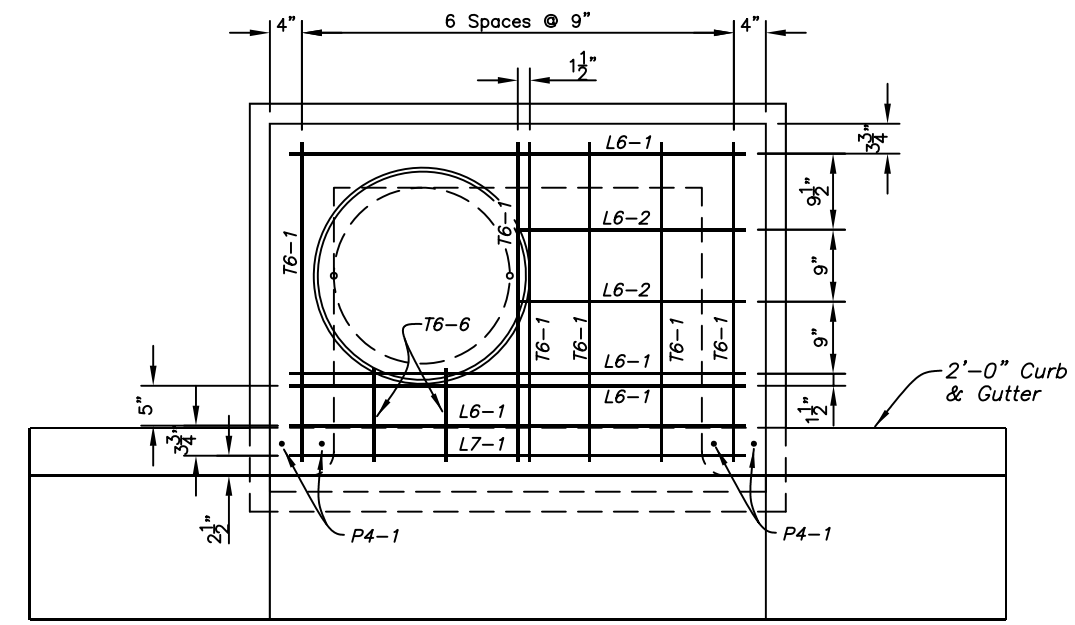

PLAN - TOP SLAB REINFORCEMENT

Scale: 1/2" = 1'-0"

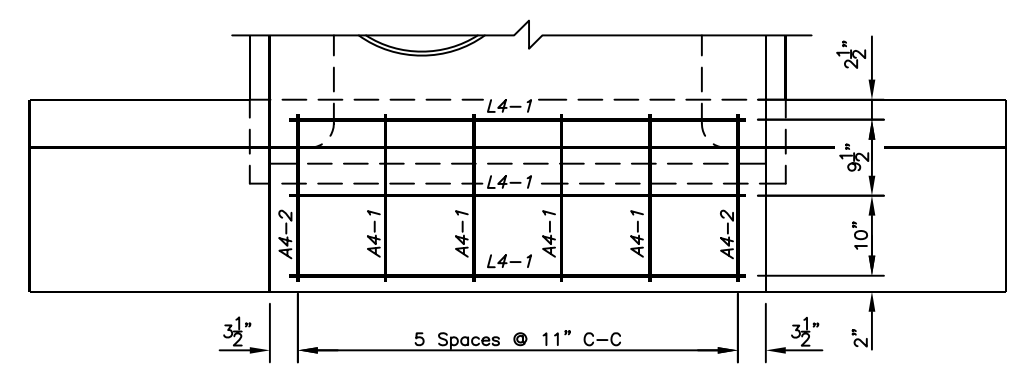

PLAN - APRON REINFORCEMENT

Scale: 1/2" = 1'-0"

SCHEDULE OF REINFORCING STEEL BARS
(FOR INLET TOP AND APRON ONLY)

MARK	SIZE	COUNT	LENGTH	WT EACH	TOTAL WT
T6-1	No 6	6	3' 5"	5.132	30.794
T6-6	No 6	2	1' 1"	1.627	3.253
L4-1	No 4	3	4' 11"	3.285	9.854
L6-1	No 6	4	4' 11"	7.385	29.541
L6-2	No 6	2	2' 5 1/2"	3.692	7.384
L7-1	No 7	1	4' 11"	10.050	10.050
A4-1	No 4	4	1' 9"	1.169	4.676
A4-2	No 4	2	2' 9 1/4"	1.851	3.702
P4-1	No 4	4	1' 1 1/2"	0.752	3.006
TOTAL WEIGHT IN POUNDS					102.261

1/2"

stormwater details/type 1 inlet

No.	DATE	REVISIONS	No.	DATE	REVISIONS
3			6		
2			5		
1			4		

DES: Storm
DRN: Storm
CKD:
DATE: 7/03

CITY of TAMPA
STORMWATER DEPARTMENT

STANDARD INLET DETAILS
TYPE I INLET

W.O.

SHEET 3 OF 30

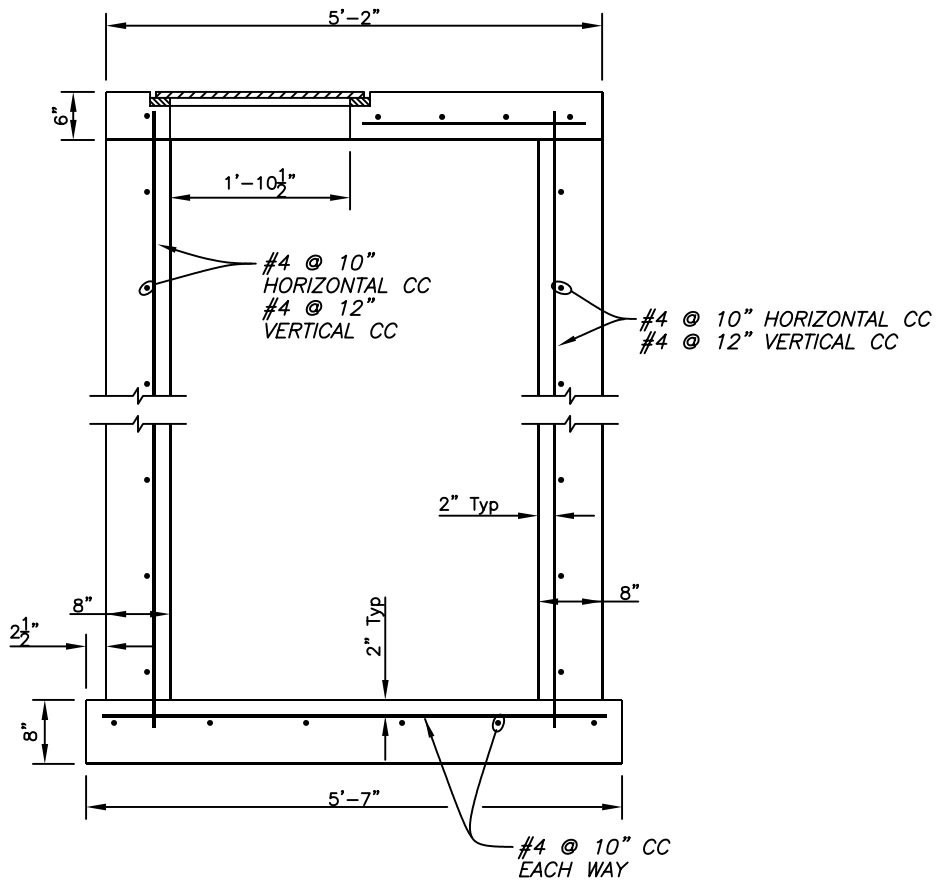

SECTION A-A

Scale: 1/2" = 1'-0"

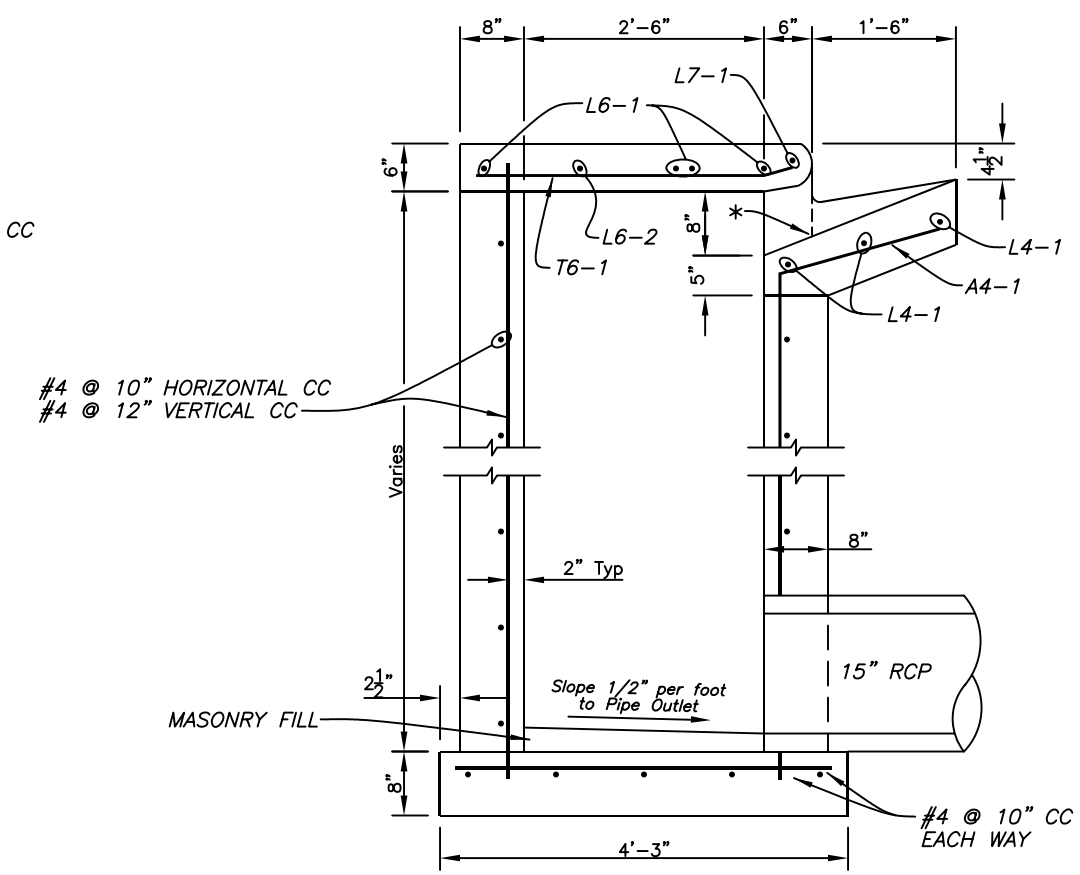

SECTION B-B

Scale: 1/2" = 1'-0"

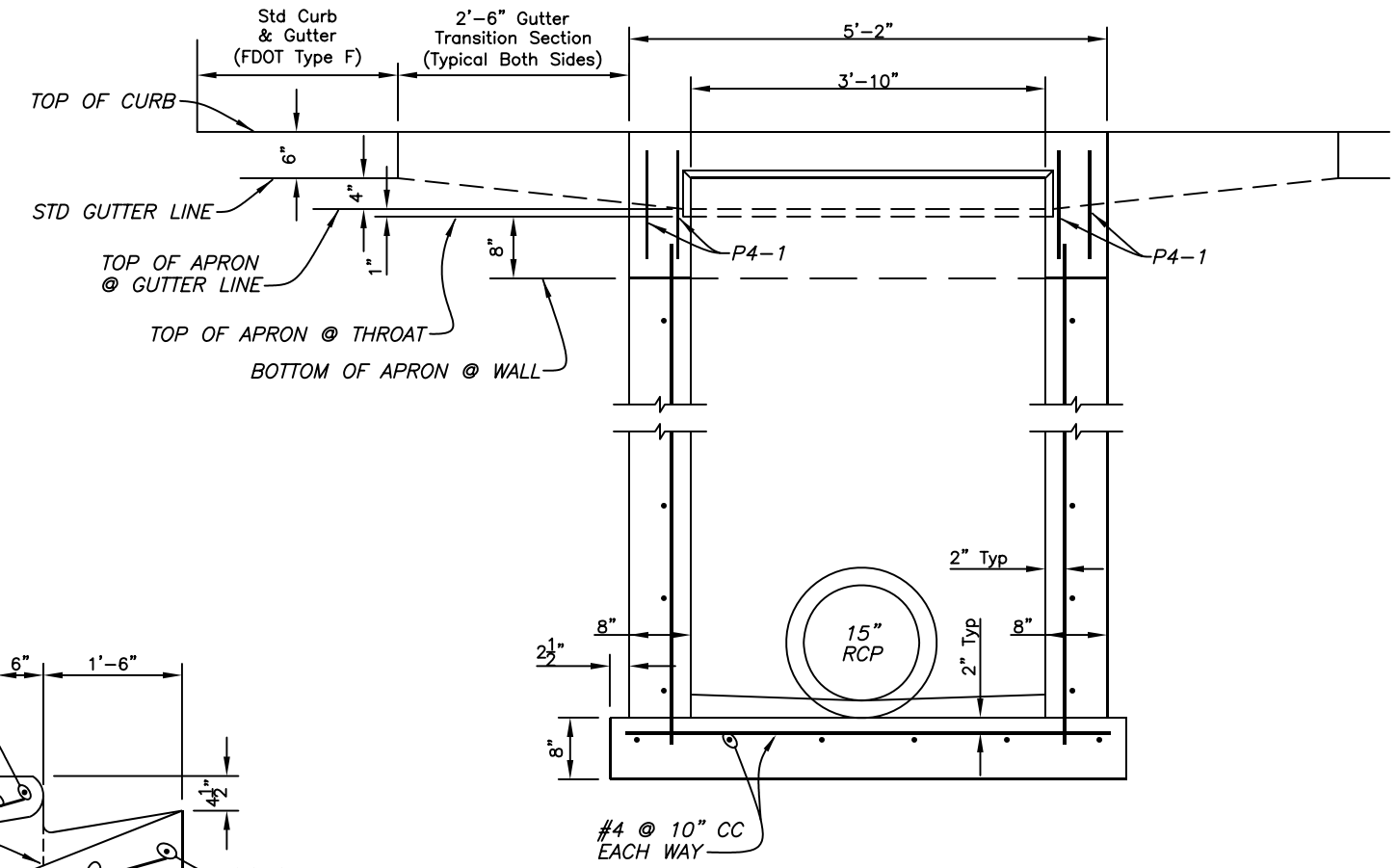

SECTION C-C

Scale: 1/2" = 1'-0"

* LOCATION OF THROAT ELEVATION

1/2"

stormwater details/type 1 inlet

No.	DATE	REVISIONS	No.	DATE	REVISIONS
3			6		
2			5		
1			4		

DES: Storm
DRN: Storm
CKD:
DATE: 7/03

CITY of TAMPA
STORMWATER DEPARTMENT

STANDARD INLET DETAILS
TYPE I INLET

W.O.

SHEET 4 OF 30

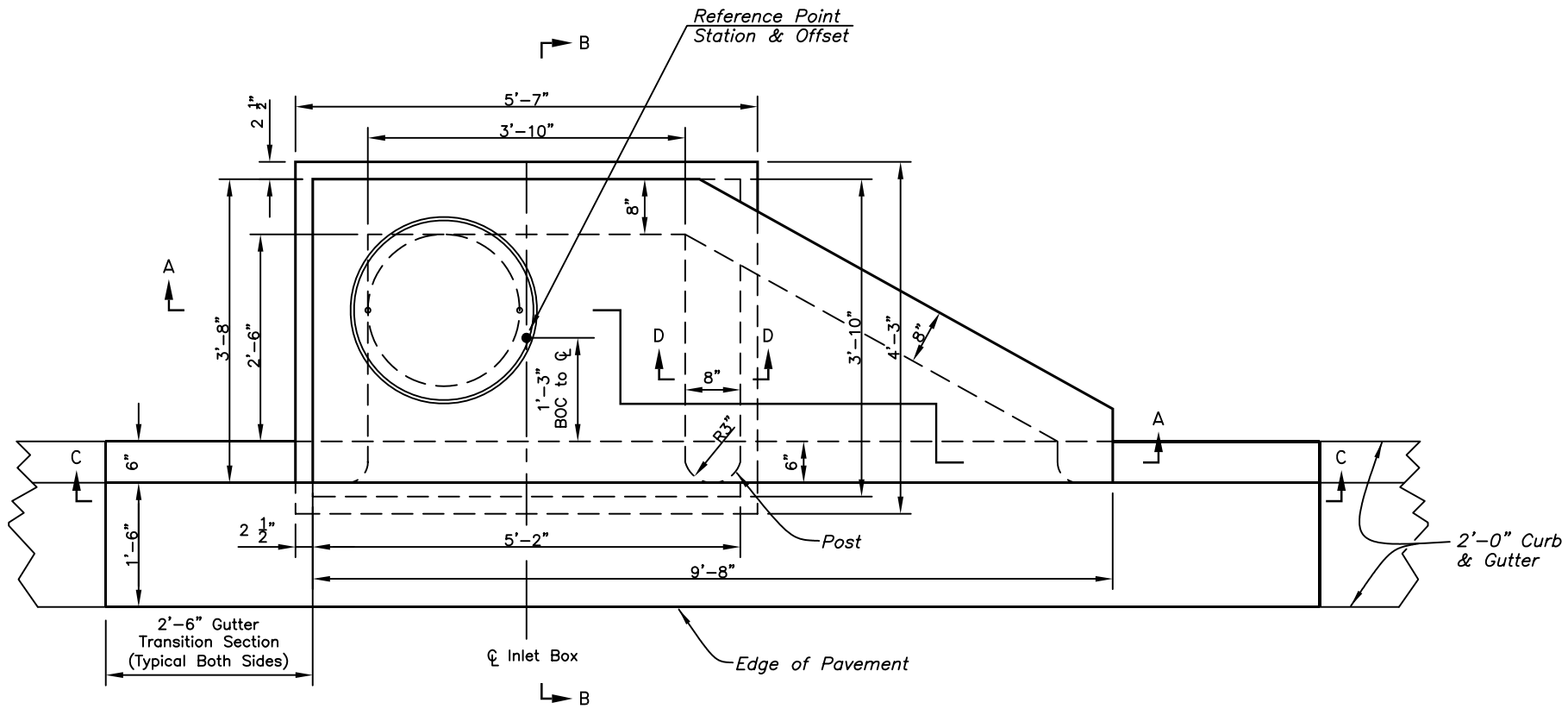

PLAN

Scale: 1/2" = 1'-0"

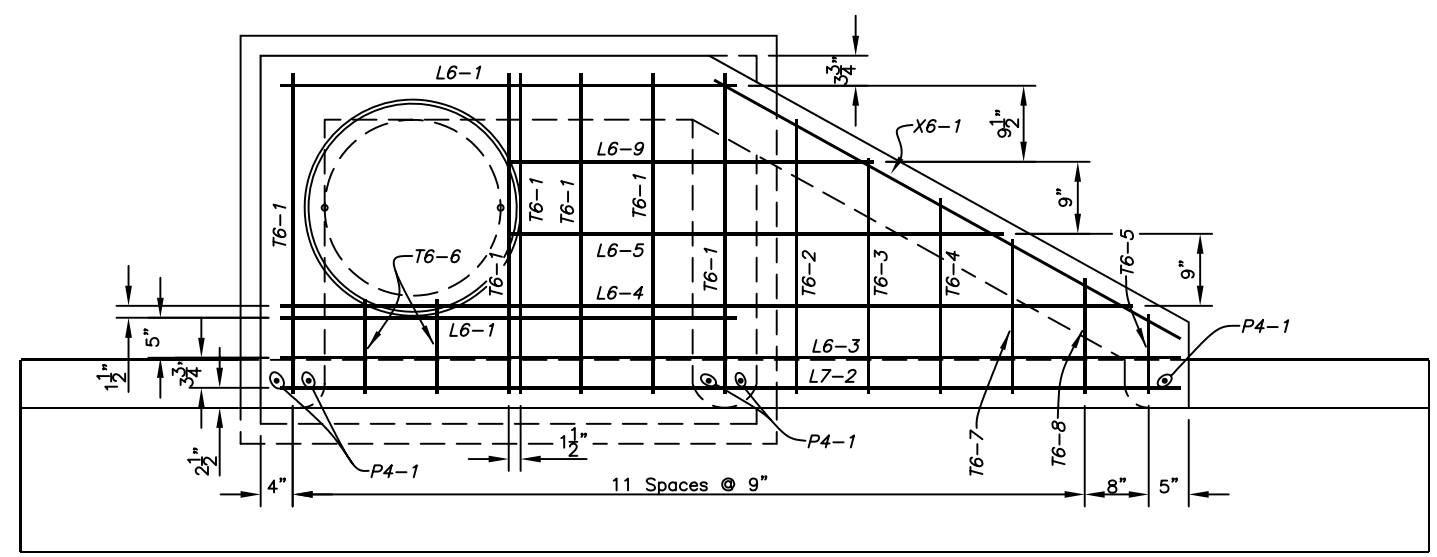

PLAN - TOP SLAB REINFORCEMENT

Scale: 1/2" = 1'-0"

1/2"

stormwater details/type 2 inlet

No.	DATE	REVISIONS	No.	DATE	REVISIONS
3			6		
2			5		
1			4		

DES: Storm
DRN: Storm
CKD:
DATE: 7/03

CITY of TAMPA
STORMWATER DEPARTMENT

STANDARD INLET DETAILS
TYPE 2 INLET

W.O.

SHEET 5 OF 30

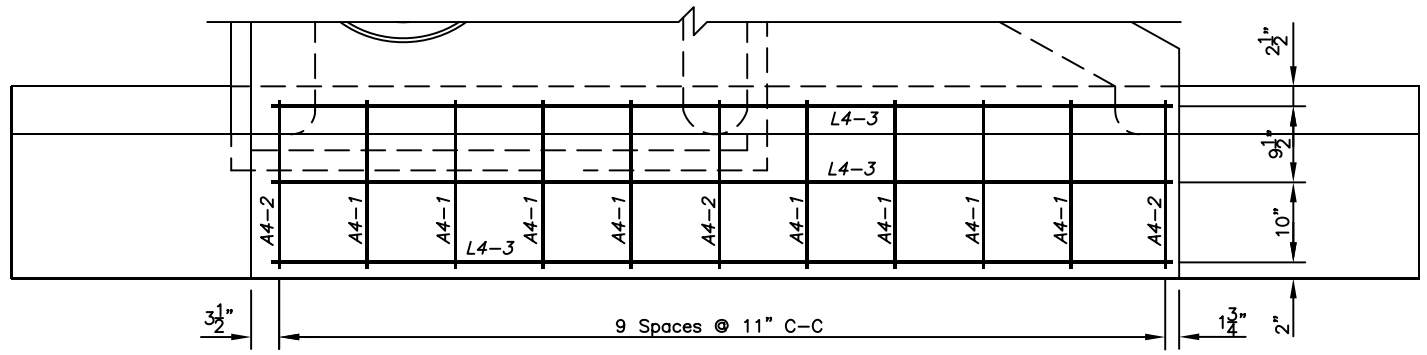

PLAN - APRON REINFORCEMENT

Scale: 1/2" = 1'-0"

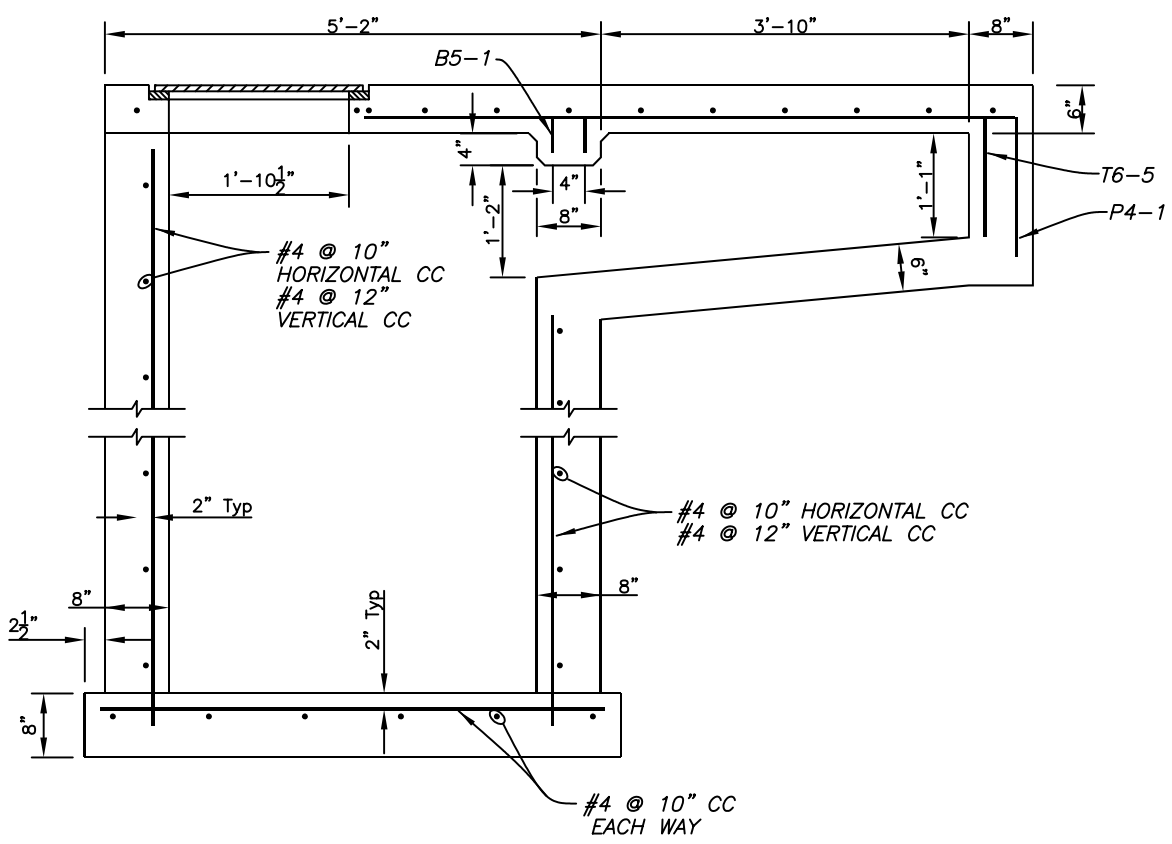

SECTION A-A

Scale: 1/2" = 1'-0"

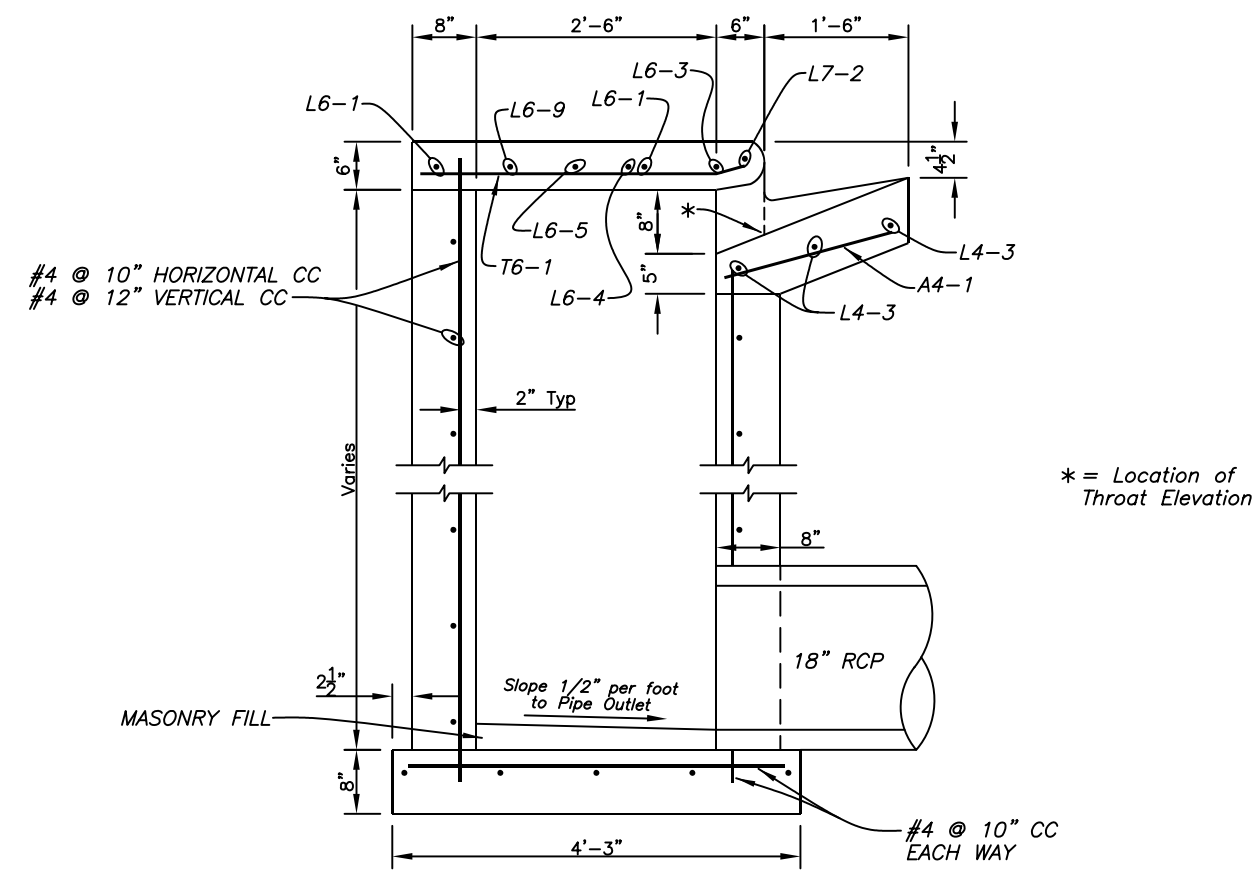

SECTION B-B

Scale: 1/2" = 1'-0"

1/2"

stormwater details/type 2 inlet

No.	DATE	REVISIONS	No.	DATE	REVISIONS
3			6		
2			5		
1			4		

DES: Storm
DRN: Storm
CKD:
DATE: 7/03

CITY of TAMPA
STORMWATER DEPARTMENT

STANDARD INLET DETAILS
TYPE 2 INLET

W.O.

SHEET 6 OF 30

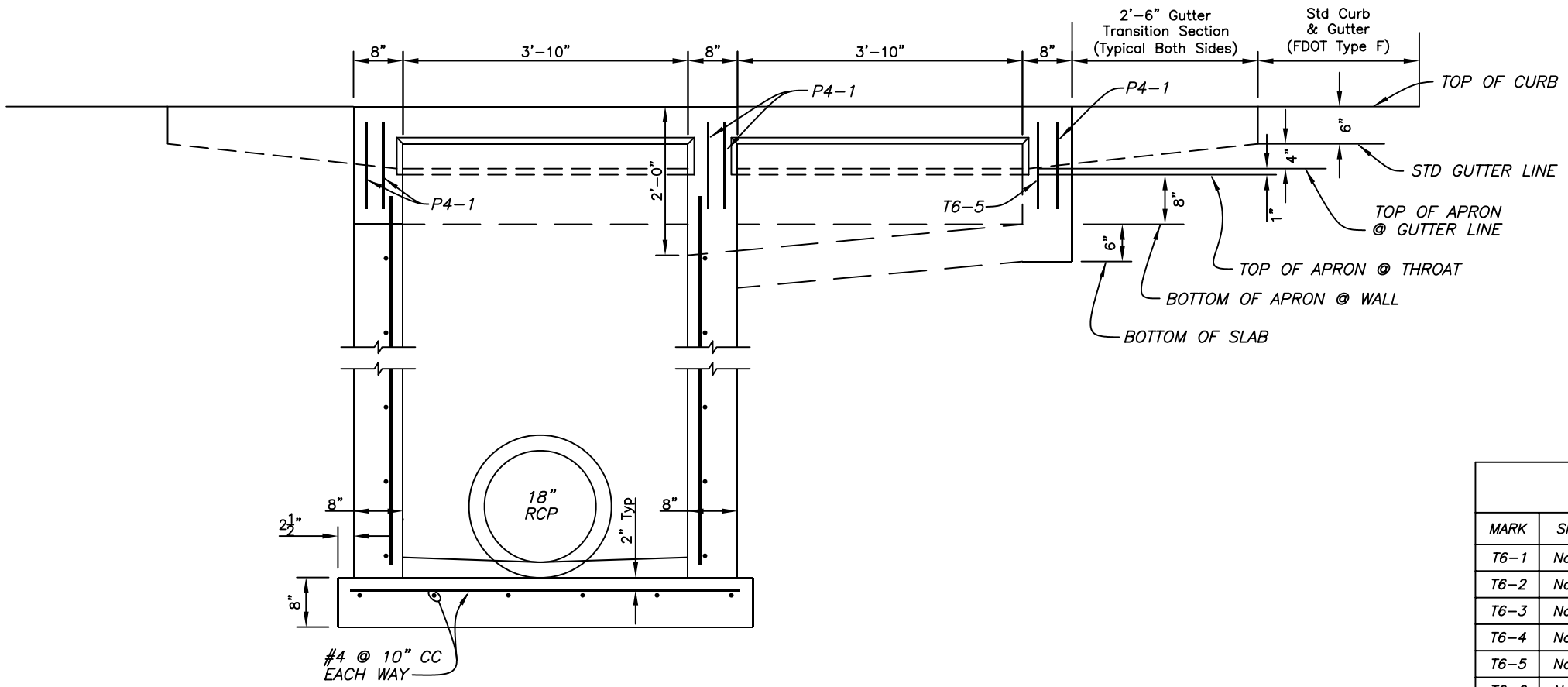

SECTION C-C

Scale: 1/2" = 1'-0"

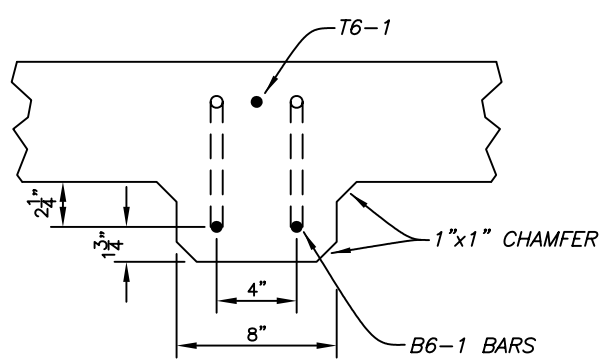

SECTION D-D

Not To Scale

SCHEDULE OF REINFORCING STEEL BARS (FOR INLET TOP AND APRON ONLY)					
MARK	SIZE	COUNT	LENGTH	WT EACH	TOTAL WT
T6-1	No 6	6	3' 4"	5.007	30.040
T6-2	No 6	1	2' 10 1/2"	4.318	4.318
T6-3	No 6	1	2' 5 1/2"	3.692	3.692
T6-4	No 6	1	2' 1/2"	3.067	3.067
T6-5	No 6	1	10"	1.252	1.252
T6-6	No 6	2	1' 1"	1.627	3.254
T6-7	No 6	1	1' 7 1/2"	2.441	2.441
T6-8	No 6	1	1' 2 1/2"	1.815	1.815
L6-1	No 6	2	4' 9"	7.135	14.269
L6-3	No 6	1	9' 4"	14.019	14.019
L6-4	No 6	1	8' 10 1/2"	13.330	13.330
L6-5	No 6	1	5' 1 3/4"	7.729	7.729
L6-9	No 6	1	3' 9 3/4"	5.726	5.726
L7-2	No 7	1	9' 4"	19.077	19.077
L4-3	No 4	3	9' 4"	6.235	18.704
A4-1	No 4	8	1' 9"	1.169	9.352
A4-2	No 4	3	2' 9 1/4"	1.851	5.553
P4-1	No 4	5	1' 1 1/2"	0.752	3.758
B6-1	No 6	2	3' 8 1/2"	5.570	11.140
X6-1	No 6	1	5' 8 1/2"	8.574	8.574
TOTAL WEIGHT IN POUNDS					181.109

1/2"

stormwater details/type 2 inlet

No.	DATE	REVISIONS	No.	DATE	REVISIONS
3			6		
2			5		
1			4		

DES: Storm
DRN: Storm
CKD:
DATE: 7/03

CITY of TAMPA
STORMWATER DEPARTMENT

STANDARD INLET DETAILS
TYPE 2 INLET

W.O.

SHEET 7 OF 30

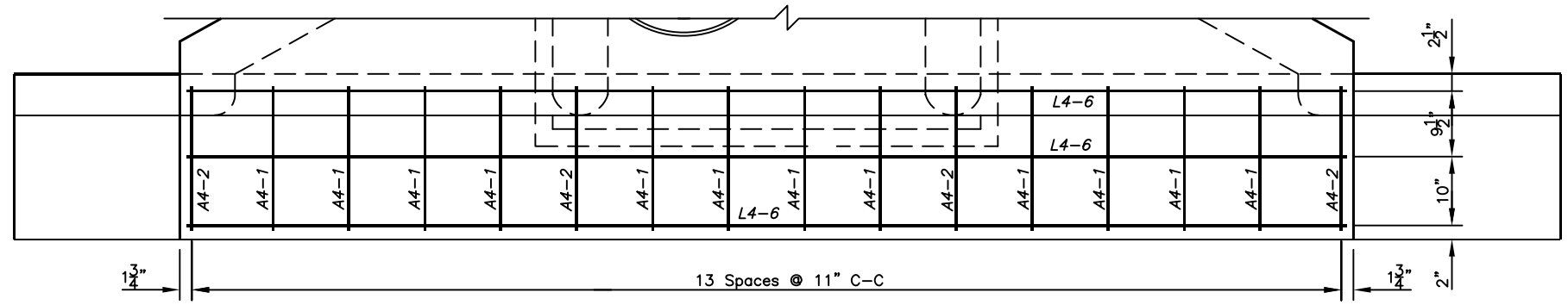

PLAN - APRON REINFORCEMENT

Scale: 1/2" = 1'-0"

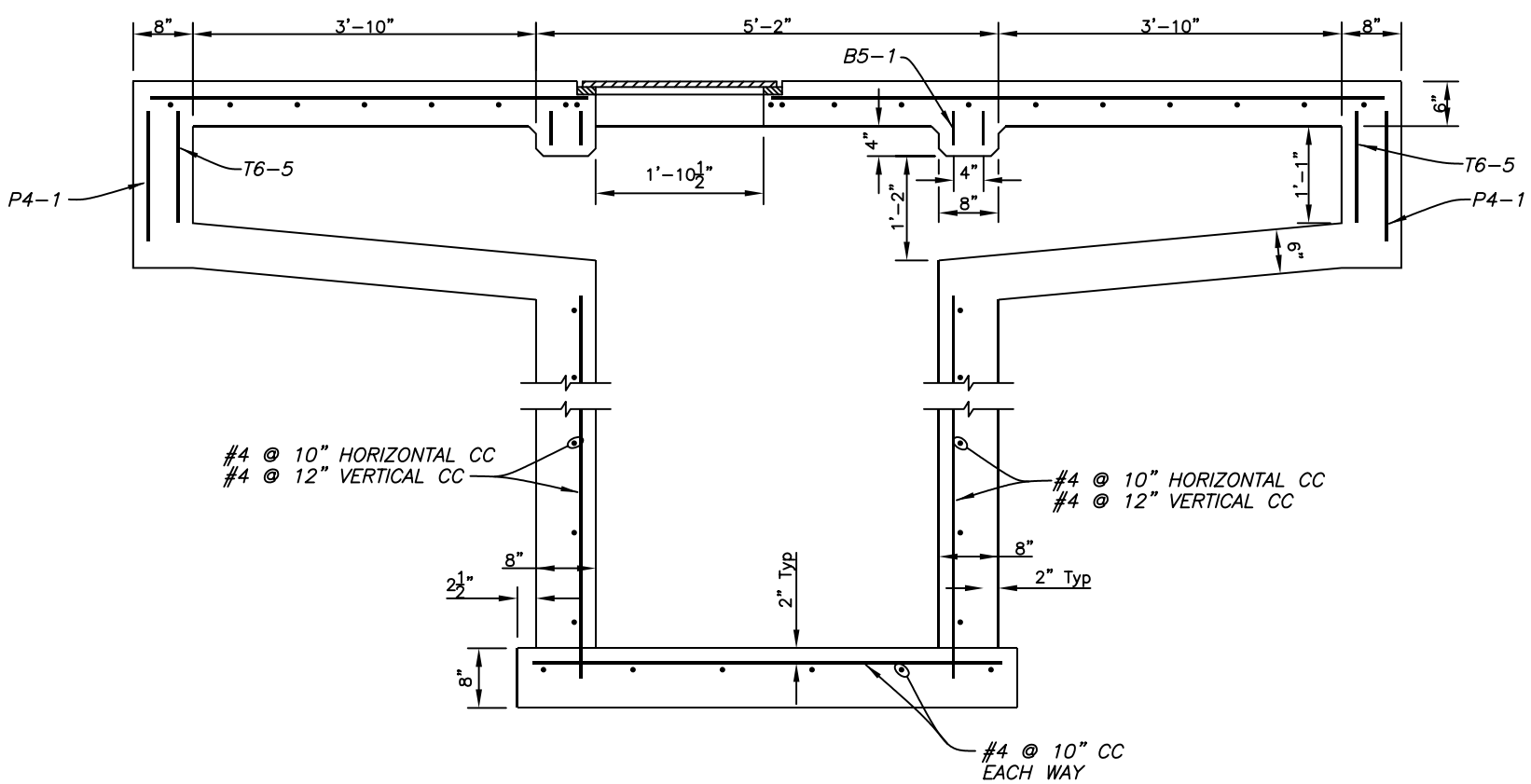

SECTION A-A

Scale: 1/2" = 1'-0"

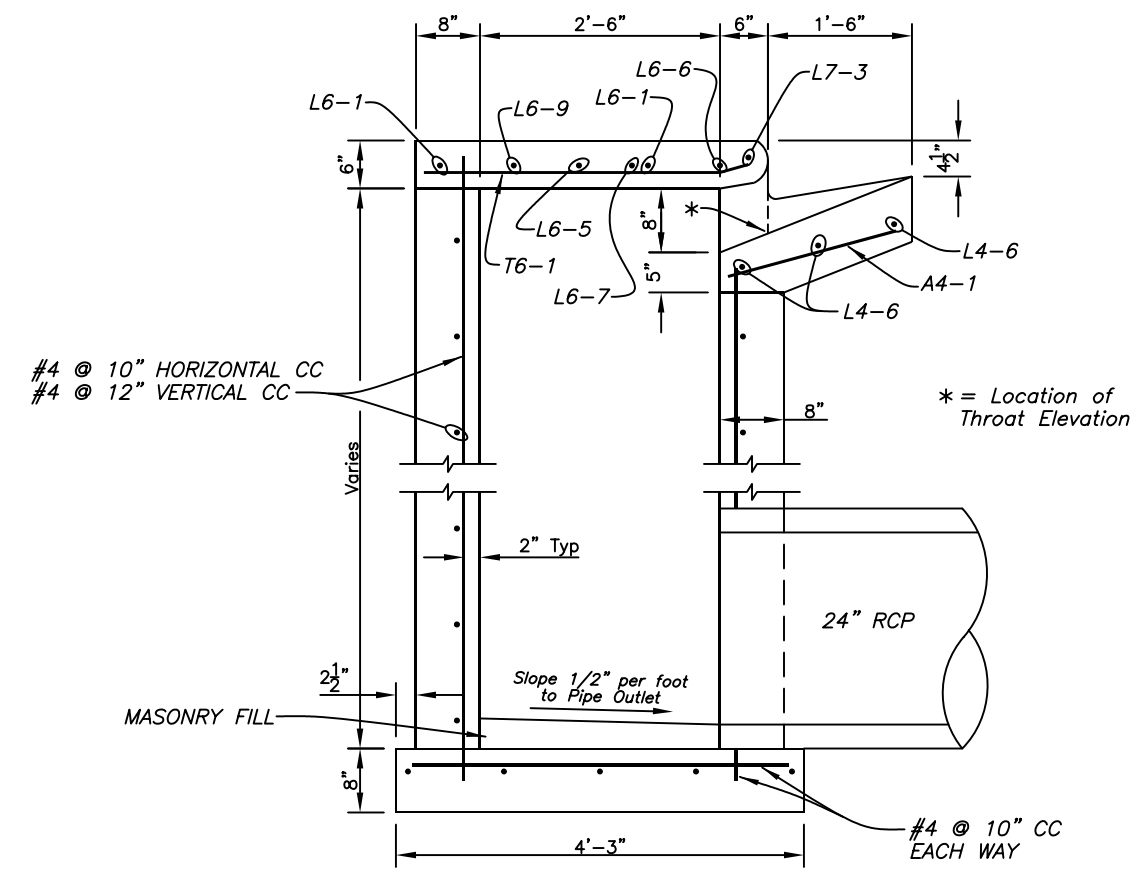

SECTION B-B

Scale: 1/2" = 1'-0"

1/2"

stormwater details/type 3 inlet

No.	DATE	REVISIONS	No.	DATE	REVISIONS
3			6		
2			5		
1			4		

DES: Storm
DRN: Storm
CKD:
DATE: 7/03

CITY of TAMPA
STORMWATER DEPARTMENT

STANDARD INLET DETAILS
TYPE 3 INLET

W.O.

SHEET 8 OF 30

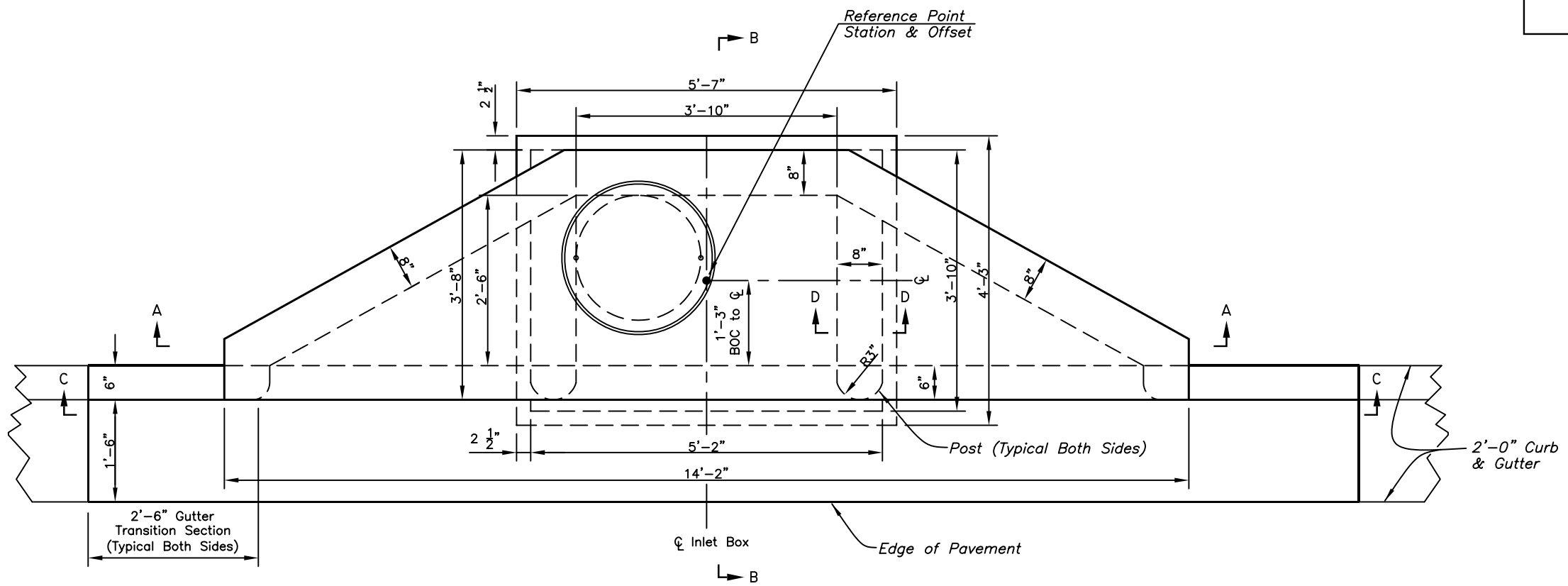

PLAN

Scale: 1/2" = 1'-0"

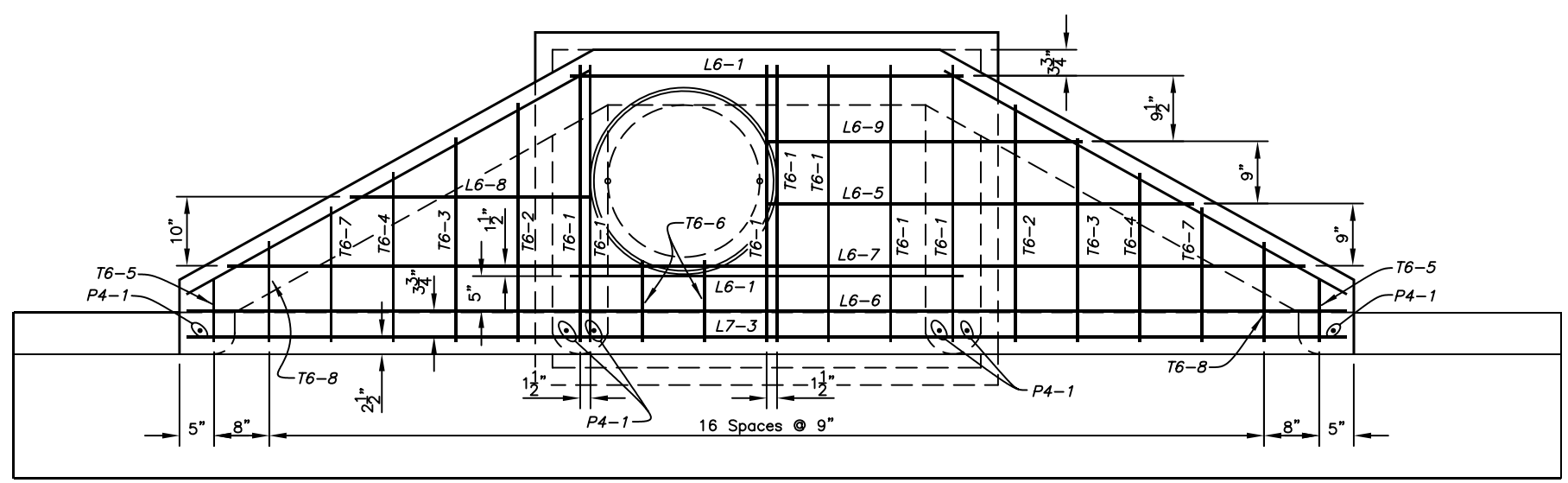

PLAN - TOP SLAB REINFORCEMENT

Scale: 1/2" = 1'-0"

1/2"

stormwater details/type 3 inlet

No.	DATE	REVISIONS	No.	DATE	REVISIONS
3			6		
2			5		
1			4		

DES: Storm
DRN: Storm
CKD:
DATE: 7/03

CITY of TAMPA
STORMWATER DEPARTMENT

STANDARD INLET DETAILS
TYPE 3 INLET

W.O.

SHEET 9 OF 30

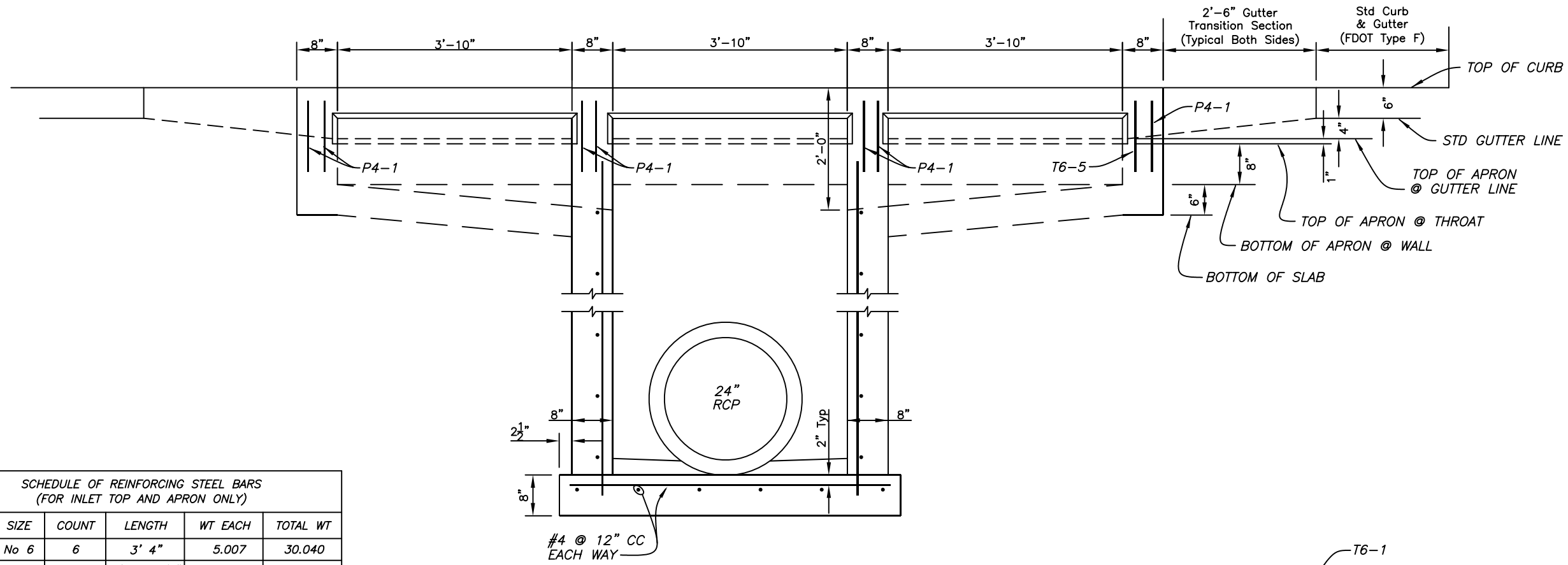

SECTION C-C

Scale: 1/2" = 1'-0"

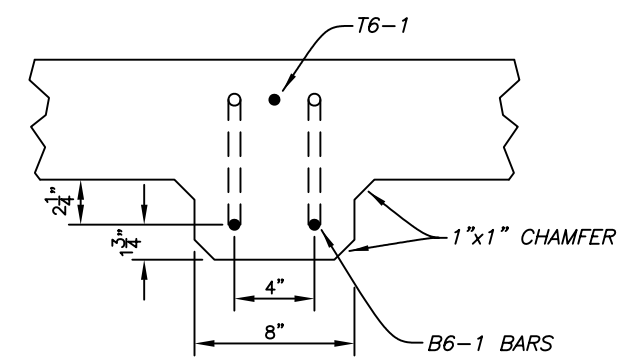

SECTION D-D

Not To Scale

SCHEDULE OF REINFORCING STEEL BARS (FOR INLET TOP AND APRON ONLY)					
MARK	SIZE	COUNT	LENGTH	WT EACH	TOTAL WT
T6-1	No 6	6	3' 4"	5.007	30.040
T6-2	No 6	2	2' 10 1/2"	4.318	8.637
T6-3	No 6	2	2' 5 1/2"	3.692	7.385
T6-4	No 6	2	2' 1/2"	3.067	6.133
T6-5	No 6	2	10"	1.252	2.503
T6-6	No 6	2	1' 1"	1.627	3.254
T6-7	No 6	2	1' 7 1/2"	2.441	4.882
T6-8	No 6	2	1' 2 1/2"	1.815	3.630
L6-1	No 6	2	4' 9"	7.135	14.269
L6-5	No 6	1	5' 1 3/4"	7.729	7.729
L6-6	No 6	1	13' 11"	20.903	20.903
L6-7	No 6	1	13' 1/4"	19.557	19.557
L6-8	No 6	1	2' 11"	4.381	4.381
L6-9	No 6	1	3' 9 3/4"	5.726	5.726
L7-3	No 7	1	13' 11"	28.446	28.446
L4-6	No 4	1	13' 11"	9.296	9.296
A4-1	No 4	12	1' 9"	1.169	14.028
A4-2	No 4	4	2' 9 1/4"	1.851	7.404
P4-1	No 4	6	1' 1 1/2"	0.752	4.509
B6-1	No 6	4	3' 8 1/2"	5.570	22.279
X6-1	No 6	2	5' 8 1/2"	8.574	17.148
TOTAL WEIGHT IN POUNDS					242.138

1/2"

stormwater details/type 3 inlet

No.	DATE	REVISIONS	No.	DATE	REVISIONS
3			6		
2			5		
1			4		

DES: Storm
DRN: Storm
CKD:
DATE: 7/03

CITY of TAMPA
STORMWATER DEPARTMENT

STANDARD INLET DETAILS
TYPE 3 INLET

W.O.

SHEET 10 OF 30

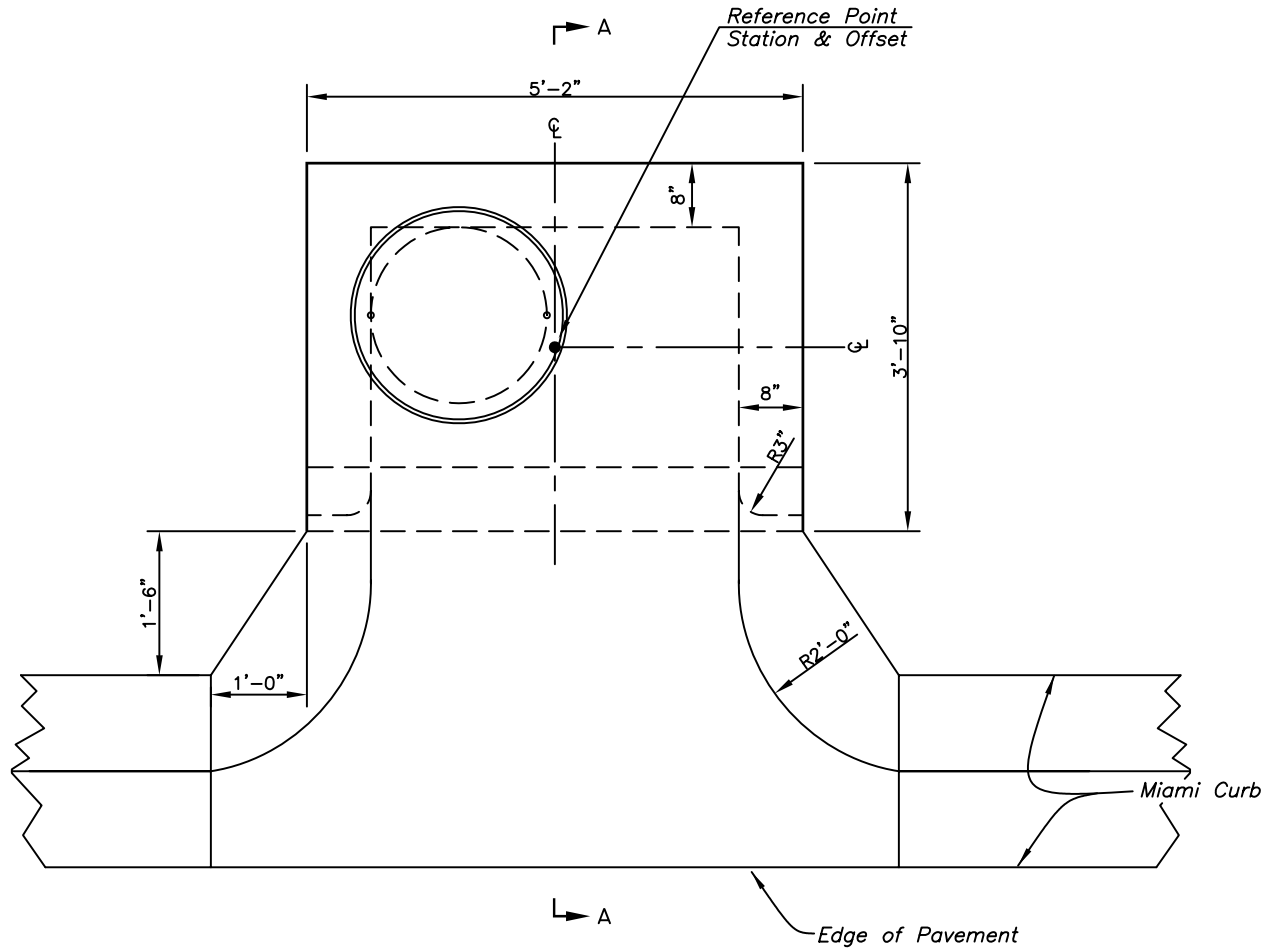

PLAN

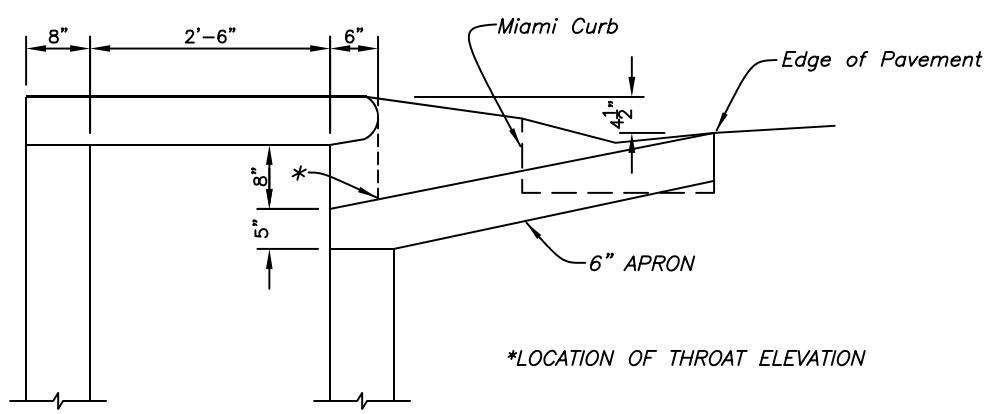

SECTION A-A

TYPE I INLET (OFFSET)

Scale: 1/2" = 1'-0"

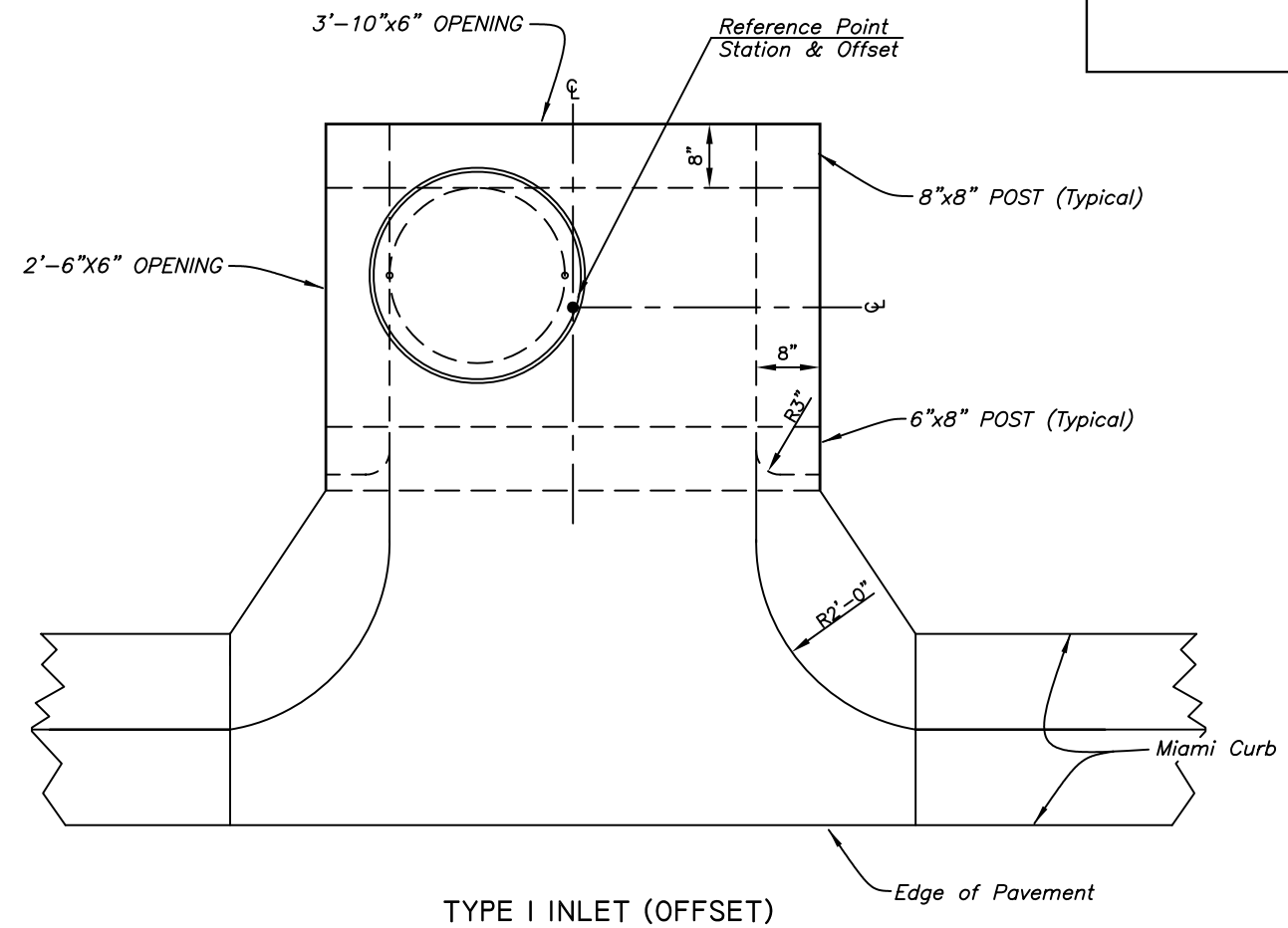

TYPE I INLET (OFFSET)
WITH SIDE AND/OR BACK OPENINGS

Scale: 1/2" = 1'-0"

TYPE 1 INLET (OFFSET)

In cases where a curb inlet is used but no barrier curb is present, the Type 1 inlet shall be offset as shown herein. Preferably, Miami curb shall be used to convey runoff along the edge of pavement to the inlet.

In cases where no Miami curb is used, the offset shall remain as shown herein and the concrete apron shall be extended on a 1.5–to–1 horizontal angle to meet the edge of pavement. The concrete apron shall be reinforced with Number 4 steel bars at 11" on center. (Disregard the A4–designated bar counts and lengths in the Schedule of Reinforcing.)

Payment for the concrete apron, curb transitions and all other work incidental to offsetting the inlet shall be made under the Type 1 Inlet contract pay item and no separate nor additional payment shall be made for this modification to the standard.

TYPE 1 INLET WITH TYPE D CURB

In cases where a curb inlet is used with Type D Curb, the Type 1 Inlet may be offset as shown in "Type 1 Inlet (Offset)" or may be constructed in the same alignment as the standard detail; i.e. with the face of the inlet top aligned with the face of curb.

If the standard alignment is used, the concrete inlet throat shall be constructed as shown in the standard. A 2'6" long concrete transition section shall be constructed on each side of the concrete inlet throat. This section shall transition from the Type D Curb (no gutter) to the 1'6" wide concrete inlet throat.

Payment for the concrete apron or concrete inlet throat, curb transitions and all other work incidental to offsetting the inlet or adapting the inlet to a Type D Curb shall be made under the Type 1 Inlet contract pay item and no separate nor additional payment shall be made for this modification to the standard.

TYPE 1 INLET WITH SIDE AND/OR BACK OPENINGS

If side and/or back openings are called for in the project plans, dimensions of the openings shall be as shown in the detail included herein. Additional P4–1 reinforcing bars shall be used at the rate of four (4) per post section, as applicable. Six (6) inch thick concrete apron(s) as shown in the project plans shall be constructed at each side and back opening.

Payment for concrete aprons and all other work incidental to constructing inlets with side and/or back openings shall be made under the Inlet contract pay item and no separate nor additional payment shall be made for this modification to the standard.

1/2"

stormwater details/type 1 inlet

No.	DATE	REVISIONS	No.	DATE	REVISIONS
3			6		
2			5		
1			4		

DES: Storm
DRN: Storm
CKD:
DATE: 7/03

CITY of TAMPA
STORMWATER DEPARTMENT

STANDARD INLET DETAILS
TYPE I INLET MODIFIED

W.O.
SHEET 11 OF 30

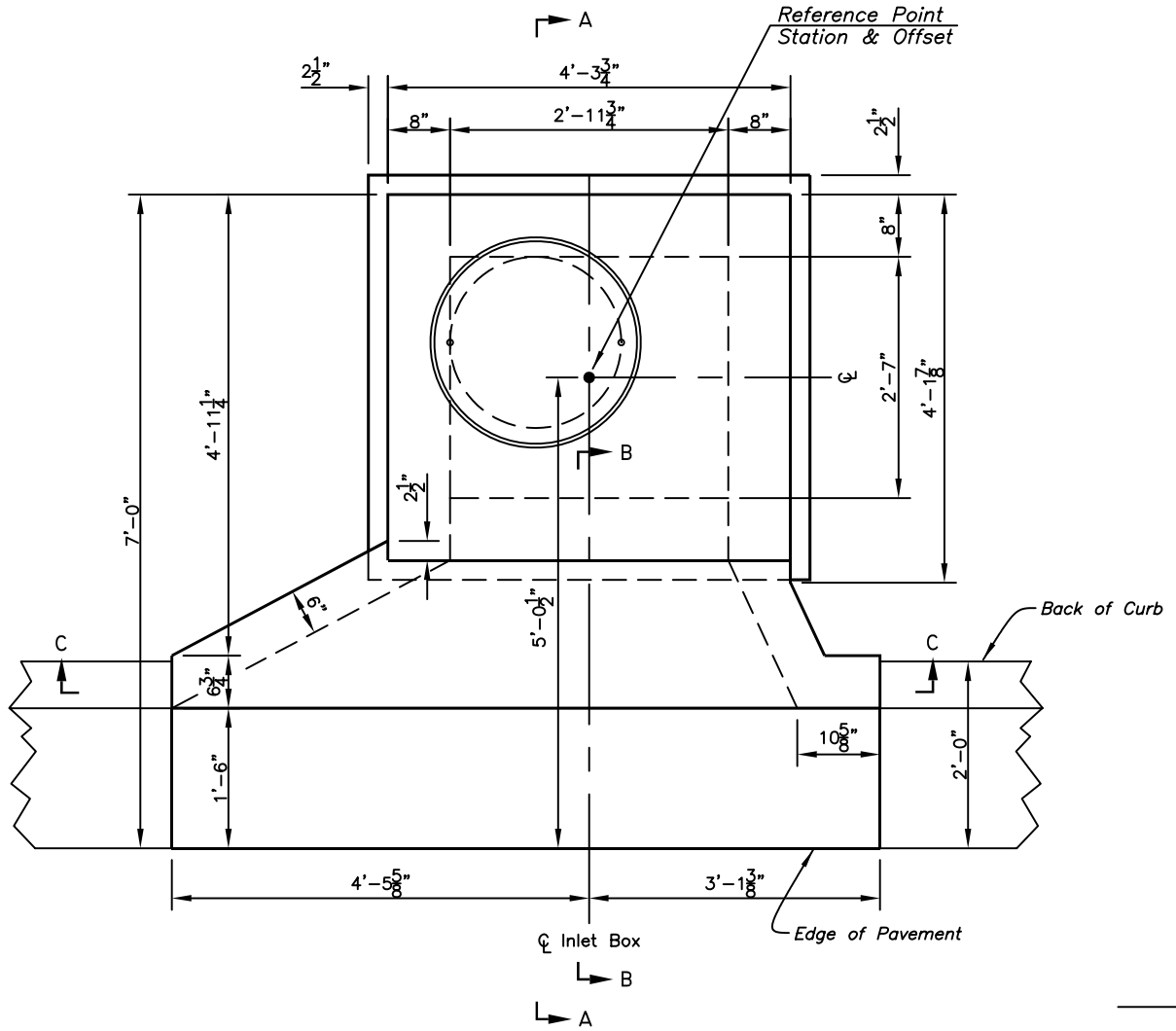

PLAN

Scale: 1/2" = 1'-0"

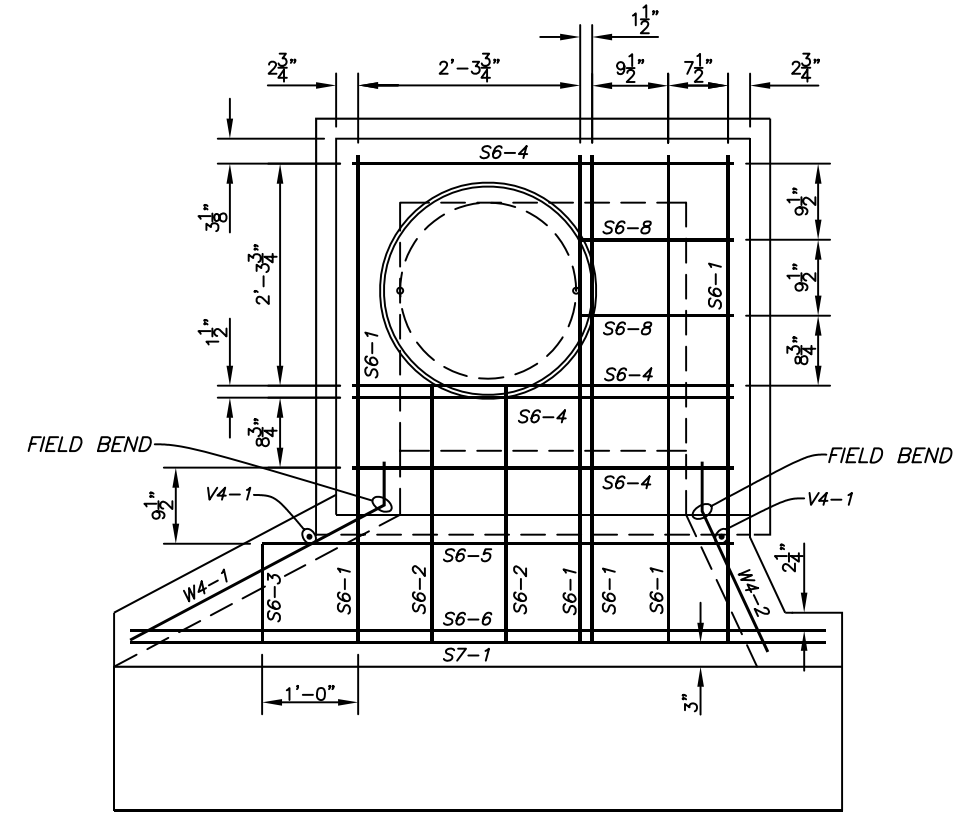

PLAN - TOP SLAB REINFORCEMENT

Scale: 1/2" = 1'-0"

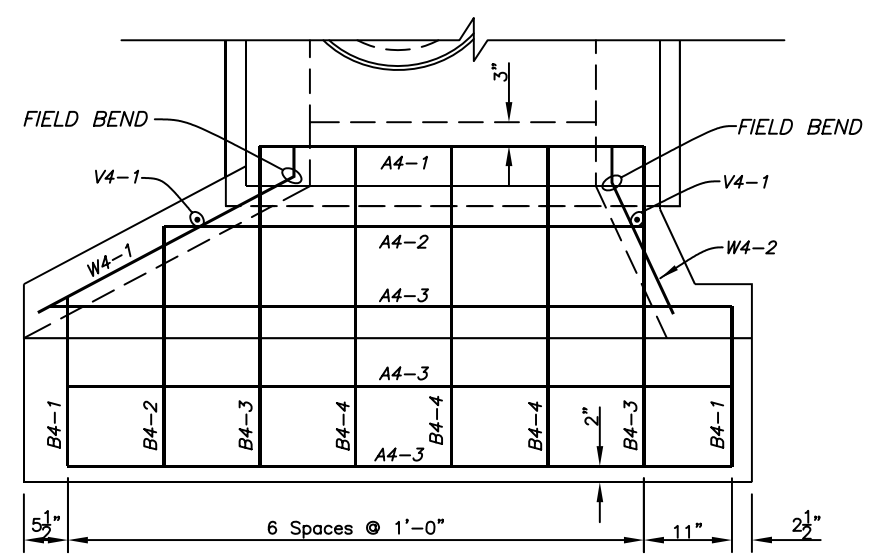

PLAN - APRON REINFORCEMENT

Scale: 1/2" = 1'-0"

1/2"

stormwater details/type bs-1 inlet

No.	DATE	REVISIONS	No.	DATE	REVISIONS
3			6		
2			5		
1			4		

DES: Storm
DRN: Storm
CKD:
DATE: 7/03

CITY of TAMPA
STORMWATER DEPARTMENT

STANDARD INLET DETAILS
TYPE BS-I CURB INLET

W.O.

SHEET 12 OF 30

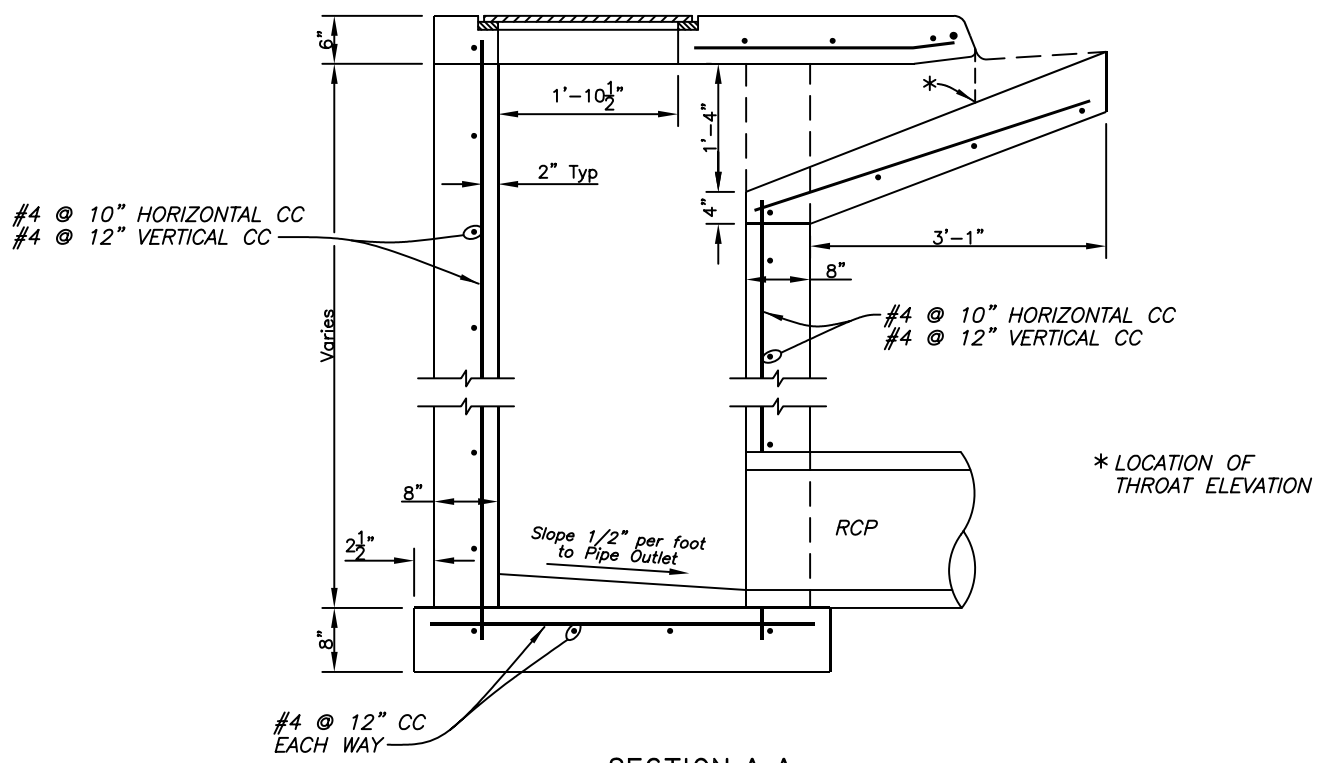

SECTION A-A

Scale: 1/2" = 1'-0"

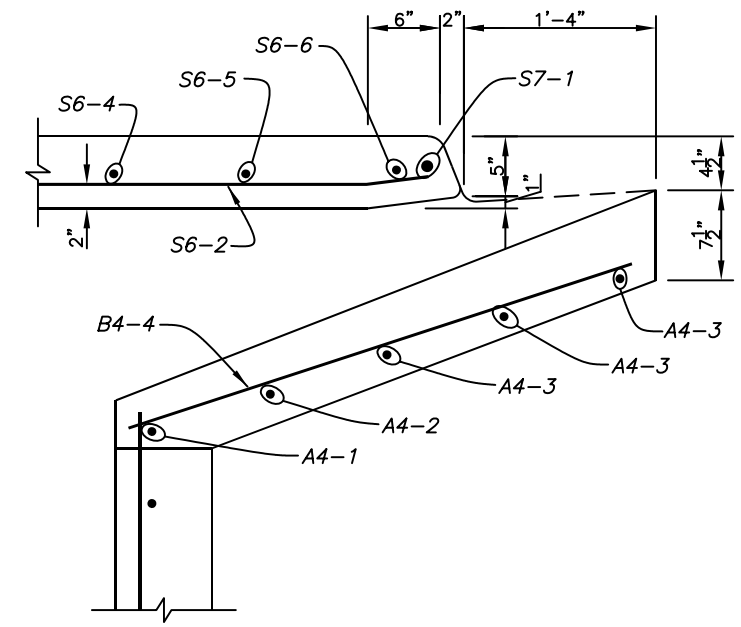

SECTION B-B

Scale: 3/4" = 1'-0"

SCHEDULE OF REINFORCING STEEL BARS (FOR INLET TOP AND APRON ONLY)					
MARK	SIZE	COUNT	LENGTH	WT EACH	TOTAL WT
A4-1	No 4	1	3' 11 3/4"	2.658	2.658
A4-2	No 4	1	4' 11"	3.285	3.285
A4-3	No 4	3	7' 4"	4.898	4.898
B4-1	No 4	2	2' 9"	1.837	3.674
B4-2	No 4	2	3' 7 3/4"	2.436	4.871
B4-3	No 4	2	5' 0 3/4"	3.382	6.764
B4-4	No 4	3	3' 6 3/4"	2.380	7.140
S6-1	No 6	5	5' 3"	7.886	39.428
S6-2	No 6	2	2' 11"	4.381	8.763
S6-3	No 6	1	1' 2 1/2"	1.814	1.814
S6-4	No 6	4	3' 11 3/4"	5.976	23.906
S6-5	No 6	1	4' 10 1/2"	7.322	7.322
S6-6	No 6	1	6' 8"	10.014	10.014
S6-8	No 6	2	1' 7 1/2"	29.289	58.578
S7-1	No 7	1	7' 4"	14.989	14.989
V4-1	No 4	2	1' 8 1/2"	1.141	2.282
W4-1	No 4	2	3' 6"	2.338	4.676
W4-2	No 4	2	2' 1"	1.391	2.783
TOTAL WEIGHT IN POUNDS					217.641

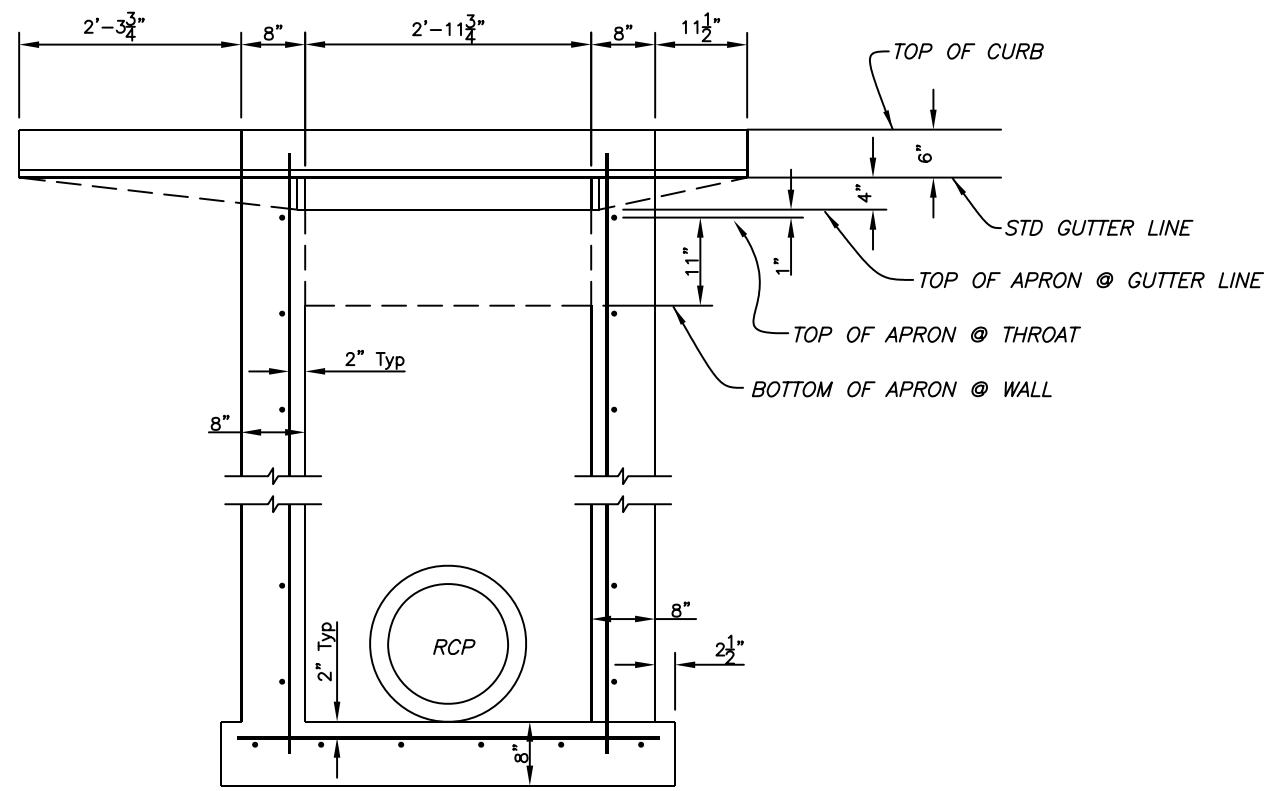

SECTION C-C

Scale: 1/2" = 1'-0"

1/2"

stormwater details/type bs-1 inlet

No.	DATE	REVISIONS	No.	DATE	REVISIONS
3			6		
2			5		
1			4		

DES: Storm
DRN: Storm
CKD:
DATE: 7/03

CITY of TAMPA
STORMWATER DEPARTMENT

STANDARD INLET DETAILS
TYPE BS-I CURB INLET

W.O.

SHEET 13 OF 30

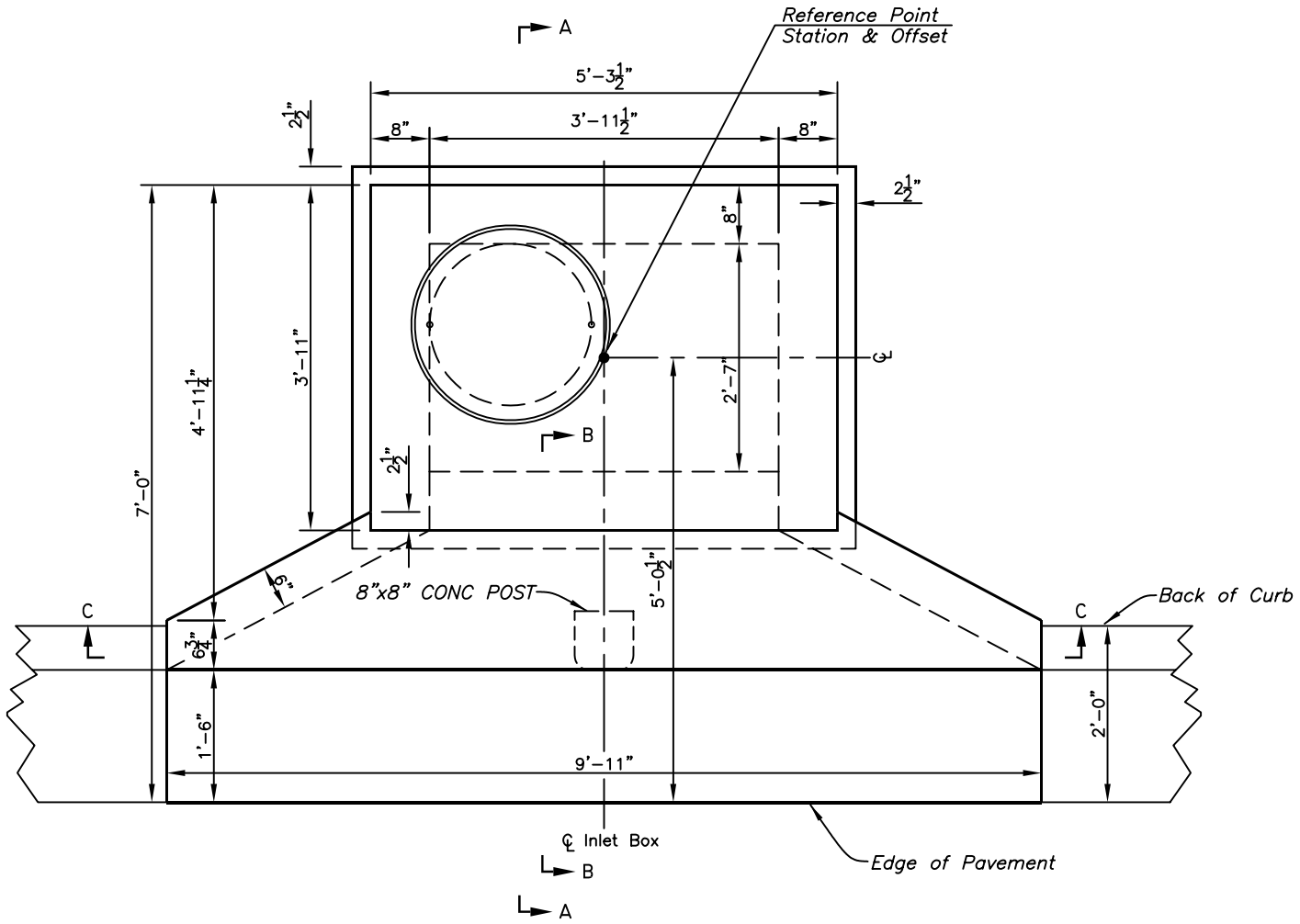

PLAN

Scale: 1/2" = 1'-0"

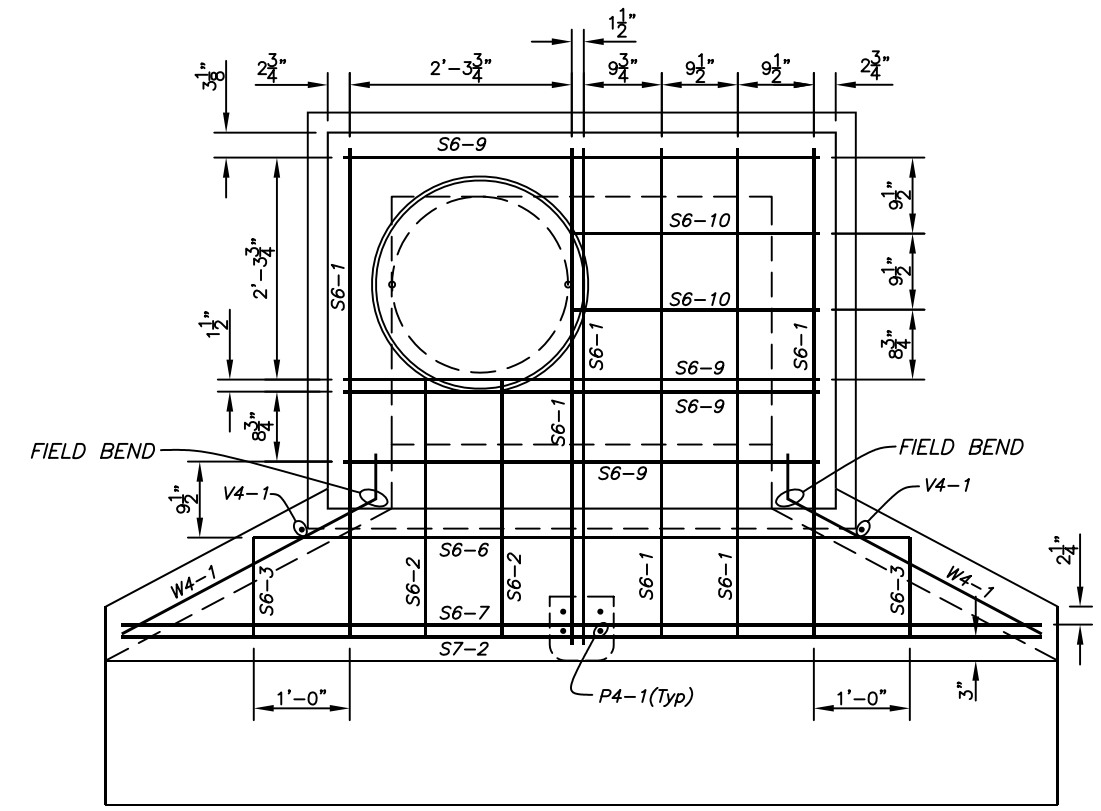

PLAN - TOP SLAB REINFORCEMENT

Scale: 1/2" = 1'-0"

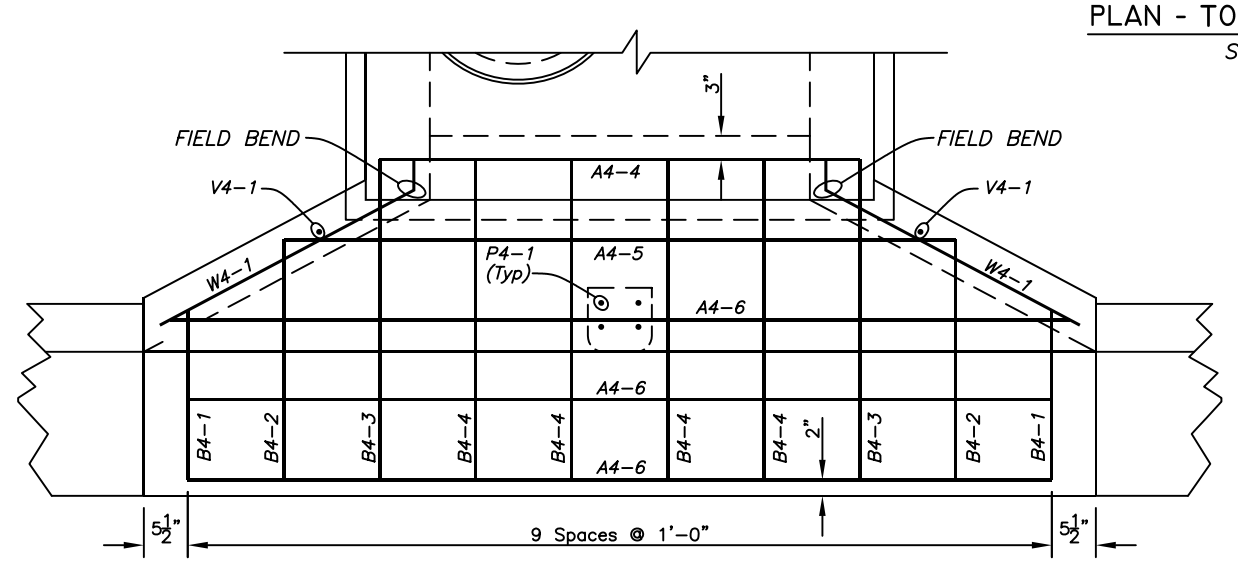

PLAN - APRON REINFORCEMENT

Scale: 1/2" = 1'-0"

1/2"

stormwater details/type bv-1 inlet

No.	DATE	REVISIONS	No.	DATE	REVISIONS
3			6		
2			5		
1			4		

DES: Storm
DRN: Storm
CKD:
DATE: 7/03

CITY of TAMPA
STORMWATER DEPARTMENT

STANDARD INLET DETAILS
TYPE BV-I CURB INLET

W.O.

SHEET 14 OF 30

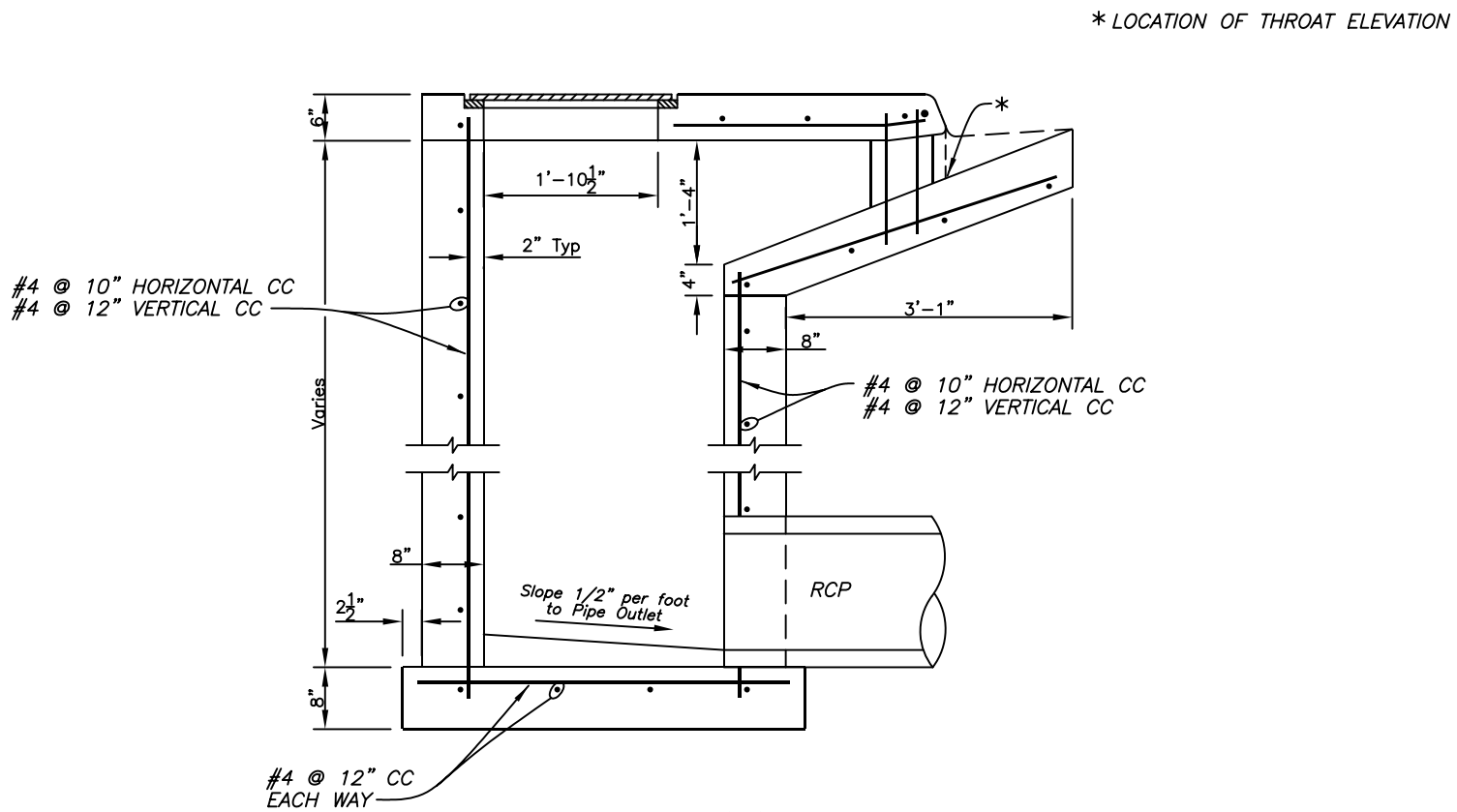

SECTION A-A

Scale: 1/2" = 1'-0"

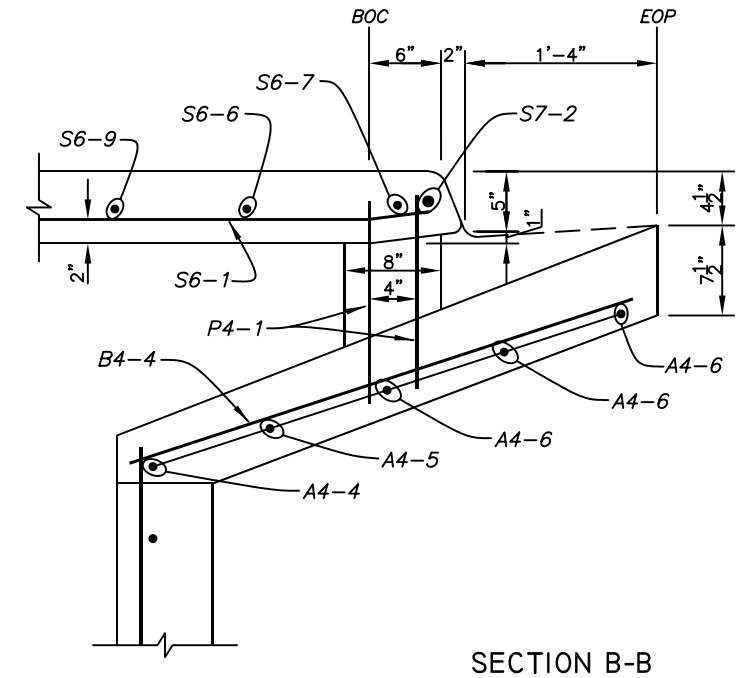

SECTION B-B

Scale: 3/4" = 1'-0"

SCHEDULE OF REINFORCING STEEL BARS (FOR INLET TOP AND APRON ONLY)											
MARK	SIZE	COUNT	LENGTH	WT EACH	TOTAL WT	MARK	SIZE	COUNT	LENGTH	WT EACH	TOTAL WT
A4-4	No 4	1	4' 11 1/2"	3.312	3.312	S6-2	No 6	5	2' 11"	4.381	8.763
A4-5	No 4	1	6' 7"	4.397	4.397	S6-3	No 6	2	1' 2 1/2"	1.814	3.629
A4-6	No 4	3	9' 7 3/4"	6.444	19.331	S6-6	No 6	1	6' 8"	10.014	10.014
B4-1	No 4	2	2' 9"	1.837	3.674	S6-7	No 6	1	9' 7 3/4"	14.488	14.488
B4-2	No 4	2	3' 7 3/4"	2.436	4.871	S6-9	No 6	4	4' 11 1/2"	7.447	29.788
B4-3	No 4	2	3' 6 3/4"	2.380	9.520	S6-10	No 6	2	2' 6"	3.755	7.510
B4-4	No 4	4	3' 6 3/4"	2.380	9.520	S7-2	No 7	1	9' 7 3/4"	19.716	19.716
P4-1	No 4	4	1' 3"	0.835	3.340	V4-1	No 4	2	1' 8 1/2"	1.141	2.282
S6-1	No 6	6	5' 3"	7.886	47.313	W4-1	No 4	4	3' 6"	2.338	9.352
TOTAL WEIGHT IN POUNDS											208.064

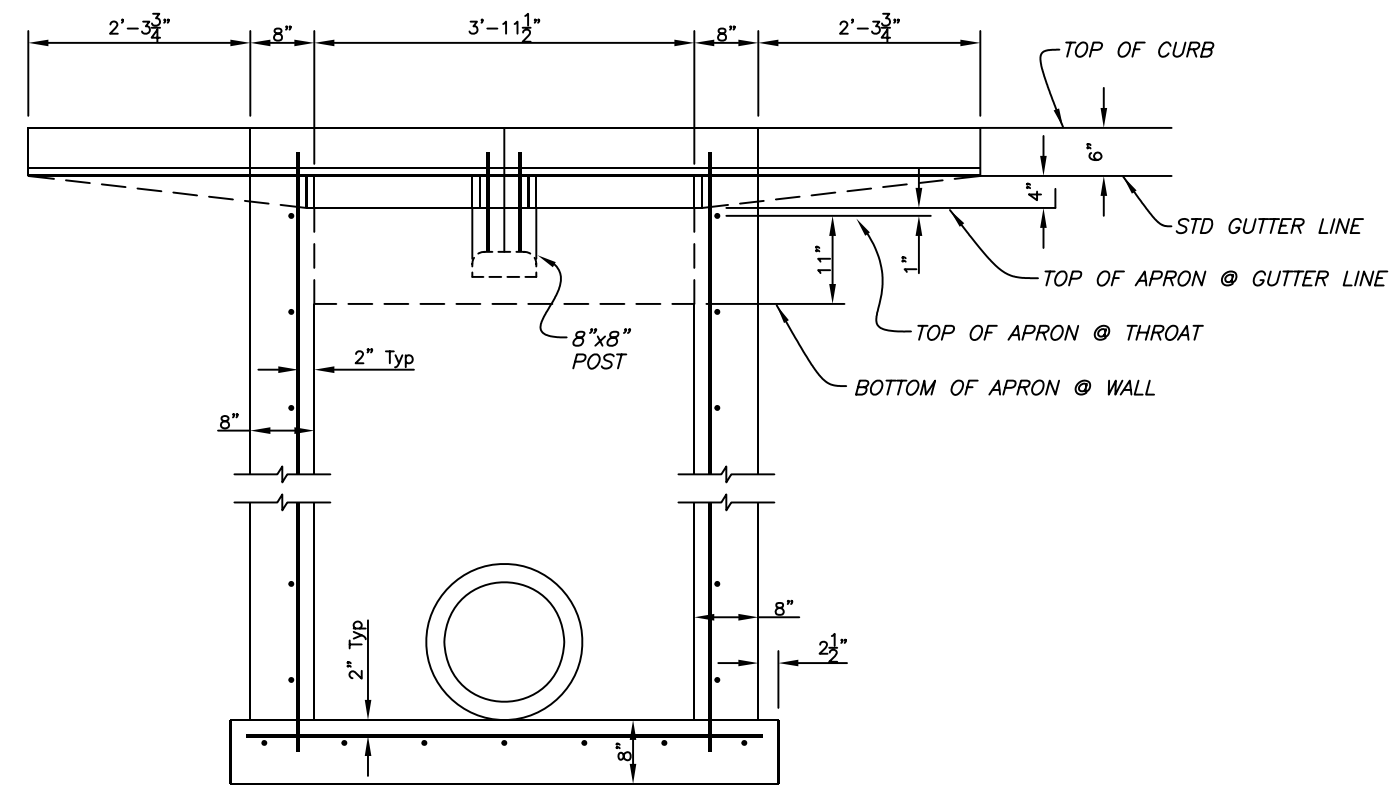

SECTION C-C

Scale: 1/2" = 1'-0"

No.	DATE	REVISIONS	No.	DATE	REVISIONS
3			6		
2			5		
1			4		

DES: Storm
DRN: Storm
CKD:
DATE: 7/03

CITY of TAMPA
STORMWATER DEPARTMENT

STANDARD INLET DETAILS
TYPE BV-I CURB INLET

W.O.

SHEET 15 OF 30

1/2"

stormwater details/type bv-1 inlet

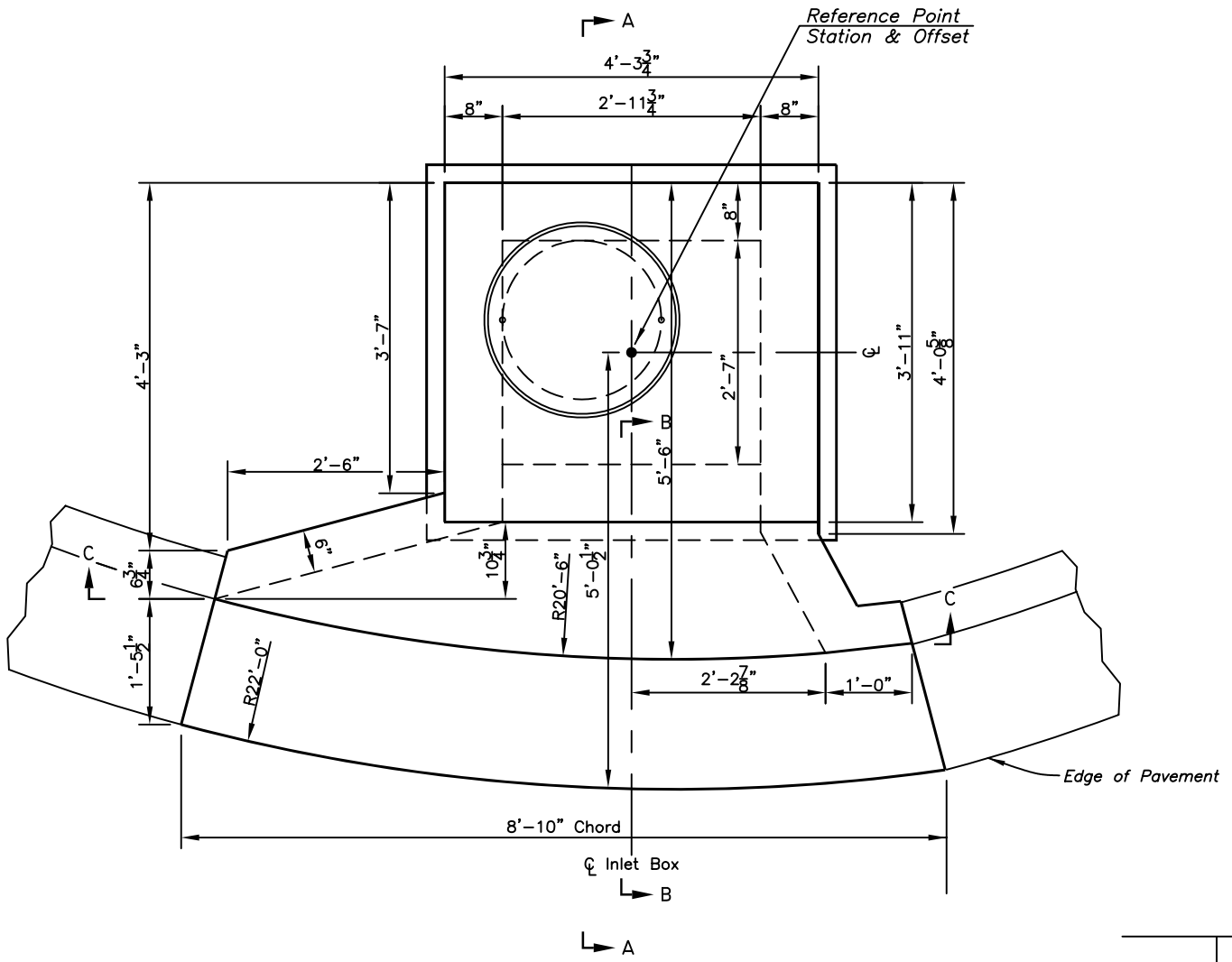

PLAN

Scale: 1/2" = 1'-0"

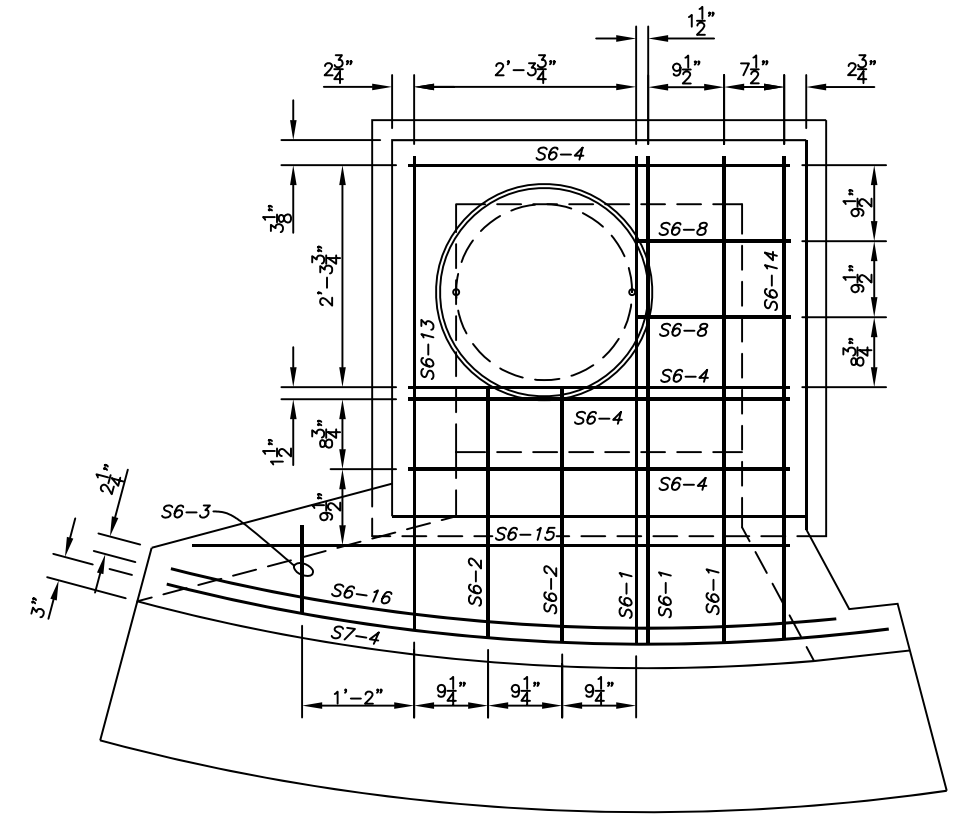

PLAN - TOP SLAB REINFORCEMENT

Scale: 1/2" = 1'-0"

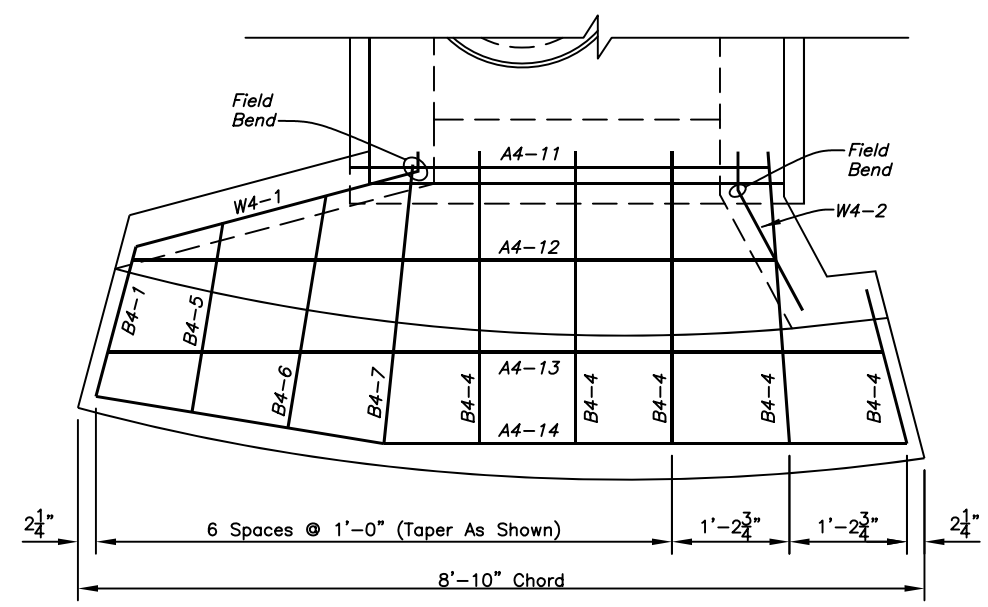

PLAN - APRON REINFORCEMENT

Scale: 1/2" = 1'-0"

1/2"

stormwater details/type br-2 inlet

No.	DATE	REVISIONS	No.	DATE	REVISIONS
3			6		
2			5		
1			4		

DES: Storm
DRN: Storm
CKD:
DATE: 7/03

CITY of TAMPA
STORMWATER DEPARTMENT

STANDARD INLET DETAILS
TYPE BR-2 CURB INLET

W.O.

SHEET 16 OF 30

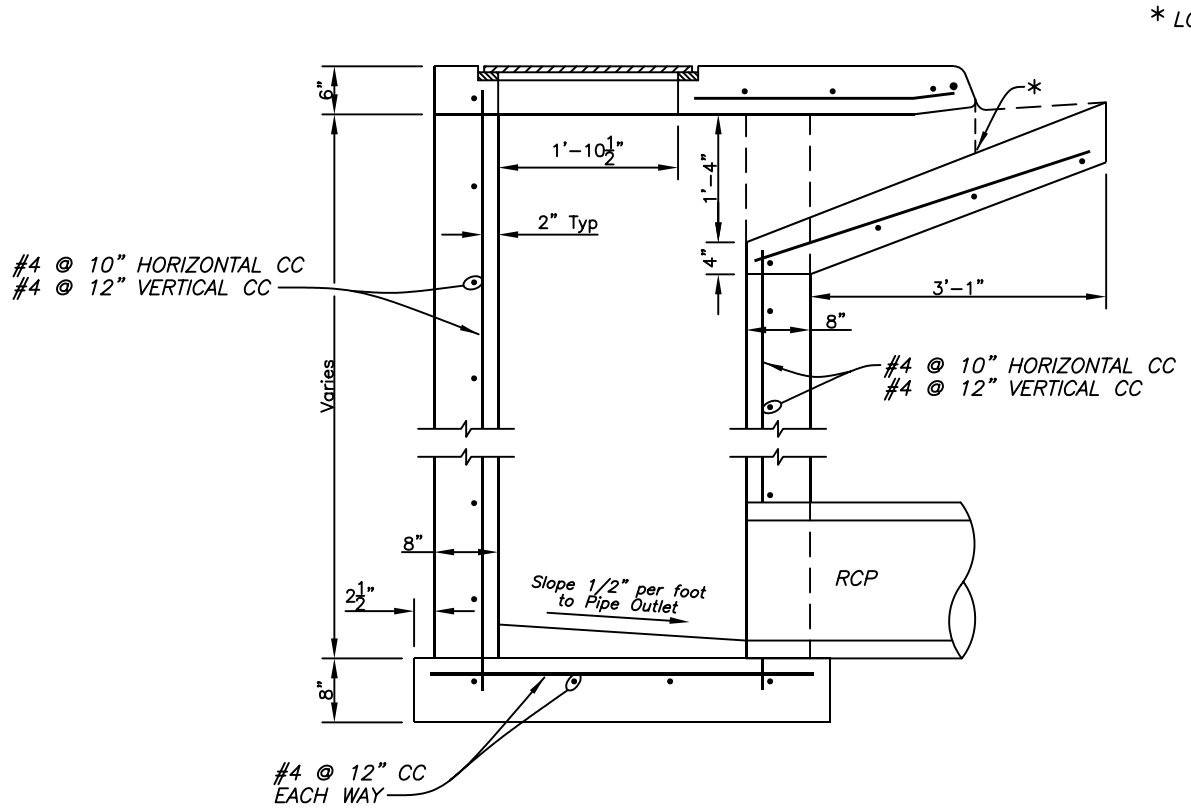

SECTION A-A

Scale: 1/2" = 1'-0"

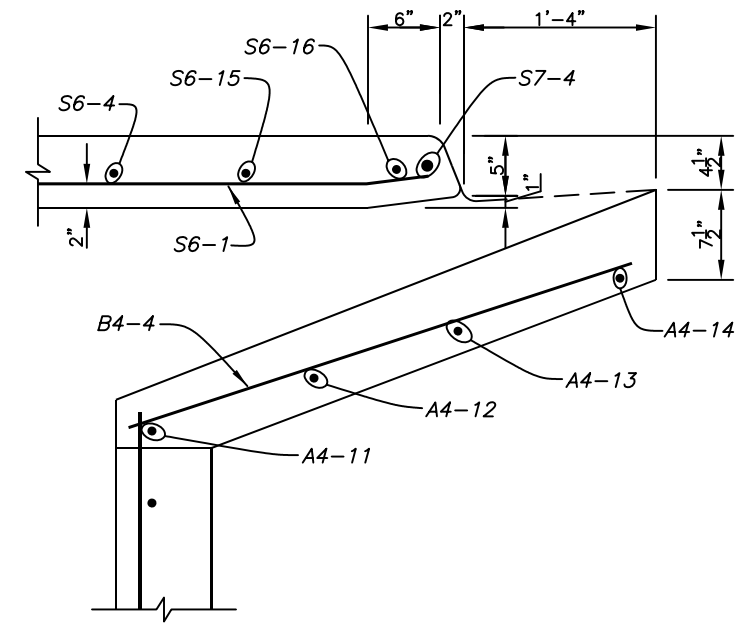

SECTION B-B

Scale: 3/4" = 1'-0"

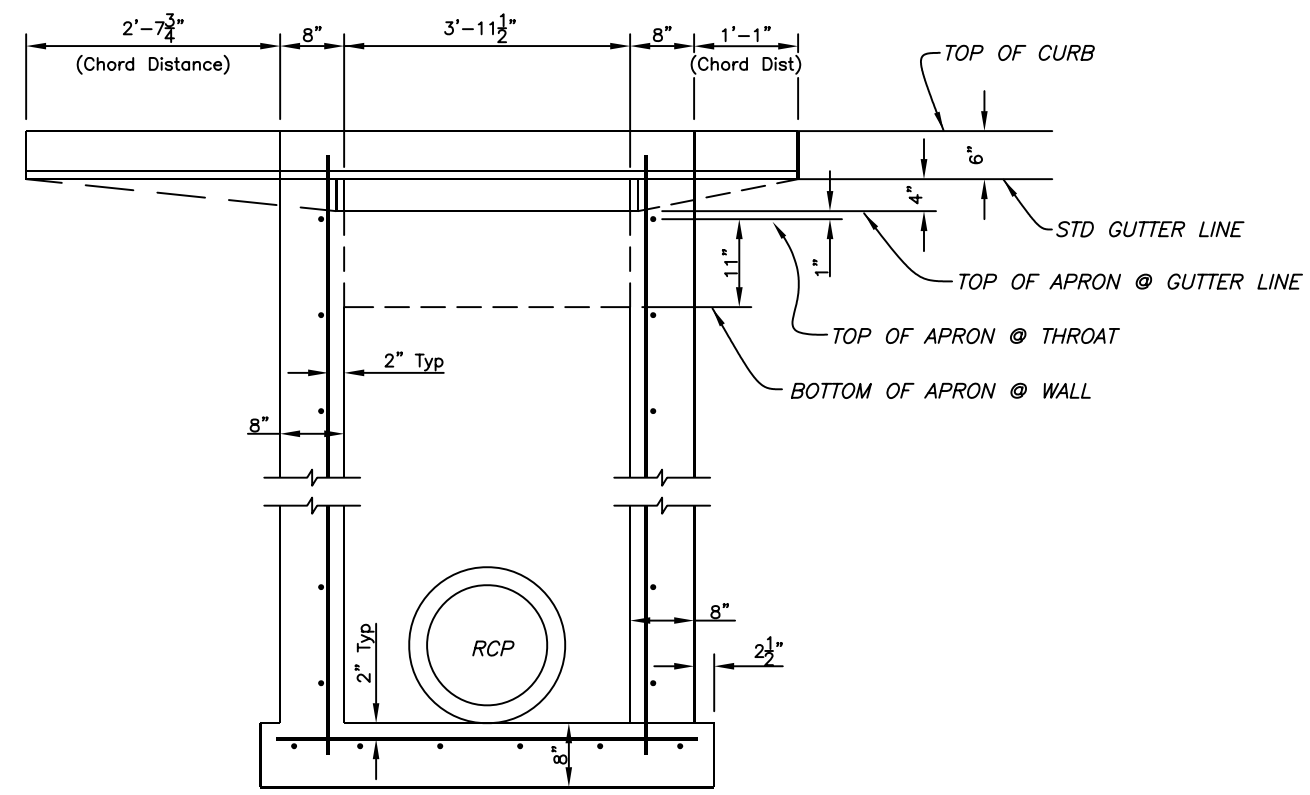

SECTION C-C

Scale: 1/2" = 1'-0"

SCHEDULE OF REINFORCING STEEL BARS (FOR INLET TOP AND APRON ONLY)

MARK	SIZE	COUNT	LENGTH	WT EACH	TOTAL WT	MARK	SIZE	COUNT	LENGTH	WT EACH	TOTAL WT
A4-11	No 4	1	4' 2"	2.784	2.784	S6-3	No 6	1	1' 2 1/2"	1.814	1.814
A4-12	No 4	1	6' 11"	4.621	4.621	S6-4	No 6	4	3' 11 3/4"	5.976	23.906
A4-13	No 4	1	8' 1"	5.399	5.399	S6-8	No 6	2	1' 7 1/2"	2.441	4.882
A4-14	No 4	1	8' 5"	5.623	5.623	S6-13	No 6	1	5' 1 1/2"	7.698	7.698
B4-1	No 4	2	2' 9"	1.837	3.674	S6-14	No 6	1	5' 2 1/2"	7.822	7.822
B4-4	No 4	3	3' 6 3/4"	2.380	7.140	S6-15	No 6	1	6' 4 1/2"	9.575	9.575
B4-5	No 4	1	3' 3 1/2"	2.199	2.199	S6-16	No 6	1	7' 8"	11.516	11.516
B4-6	No 4	1	4' 0 3/4"	2.714	2.714	S7-4	No 7	1	7' 9 3/4"	15.970	15.970
B4-7	No 4	1	4' 10 1/2"	3.257	3.257	W4-1	No 4	2	3' 6"	2.338	4.676
S6-1	No 6	3	5' 3"	7.886	23.657	W4-2	No 4	2	2' 1"	1.391	2.783
S6-2	No 6	2	2' 11"	4.381	8.763						
TOTAL WEIGHT IN POUNDS											160.471

1/2"

stormwater details/type br-2 inlet

No.	DATE	REVISIONS	No.	DATE	REVISIONS
3			6		
2			5		
1			4		

DES: Storm
DRN: Storm
CKD:
DATE: 7/03

CITY of TAMPA
STORMWATER DEPARTMENT

STANDARD INLET DETAILS
TYPE BR-2 CURB INLET

W.O.

SHEET 17 OF 30

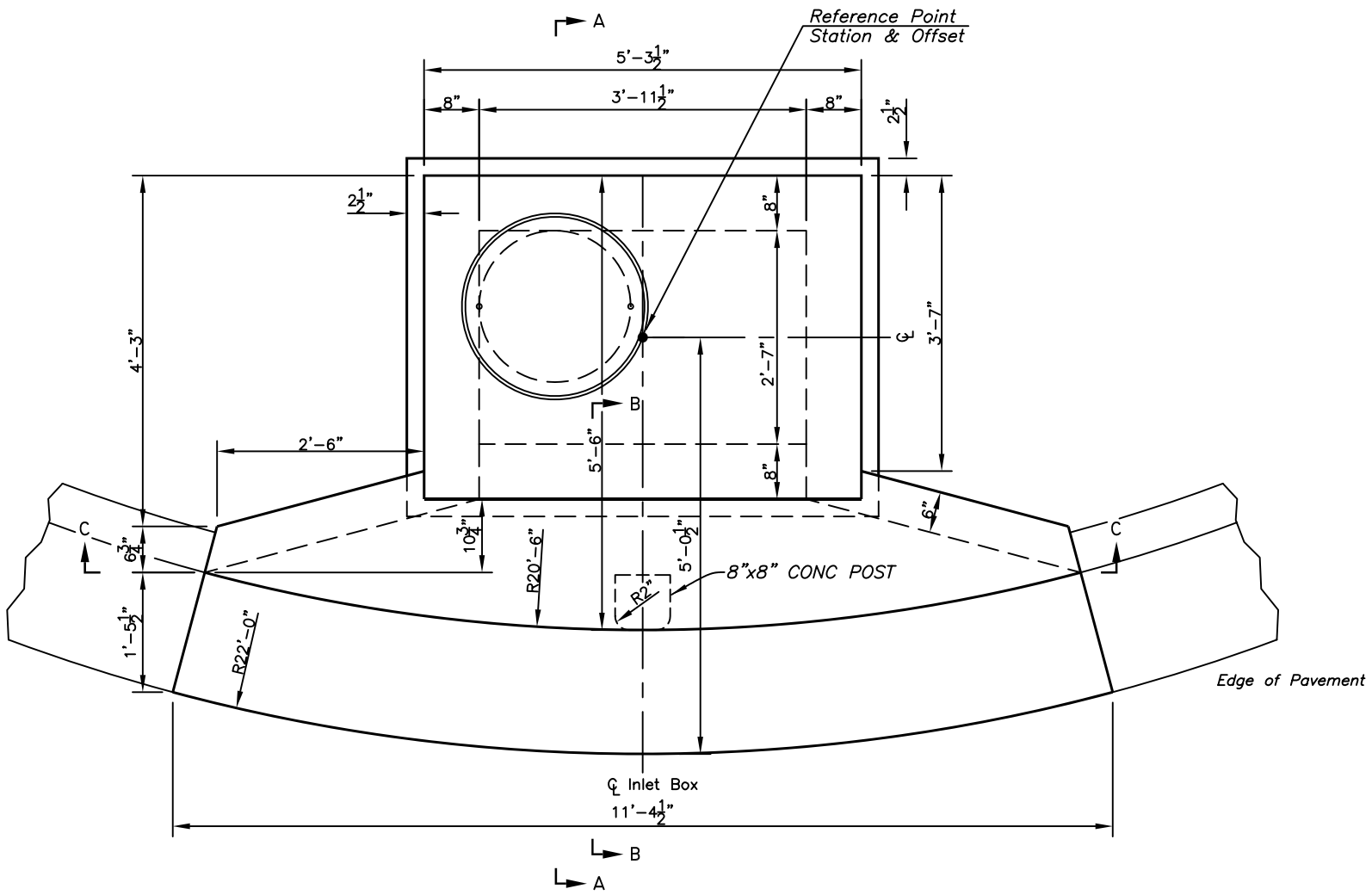

PLAN

Scale: 1/2" = 1'-0"

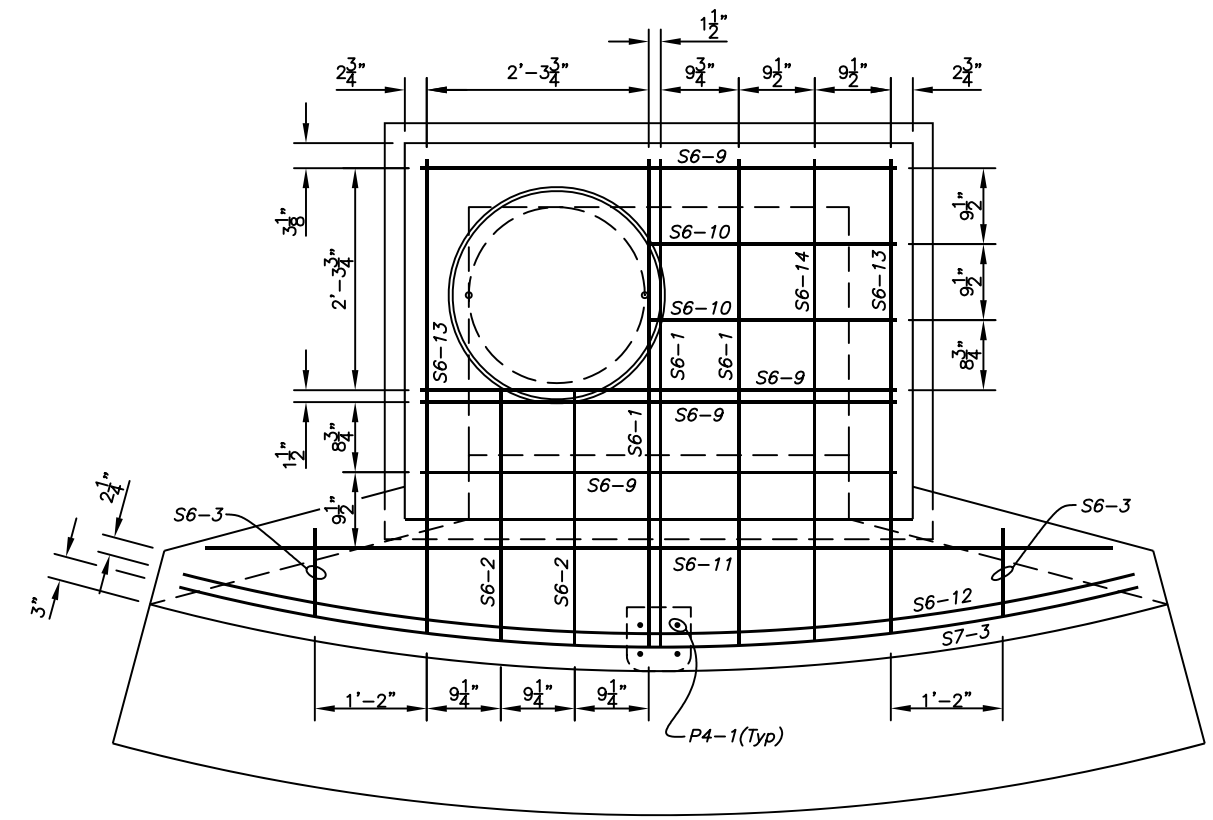

PLAN - TOP SLAB REINFORCEMENT

Scale: 1/2" = 1'-0"

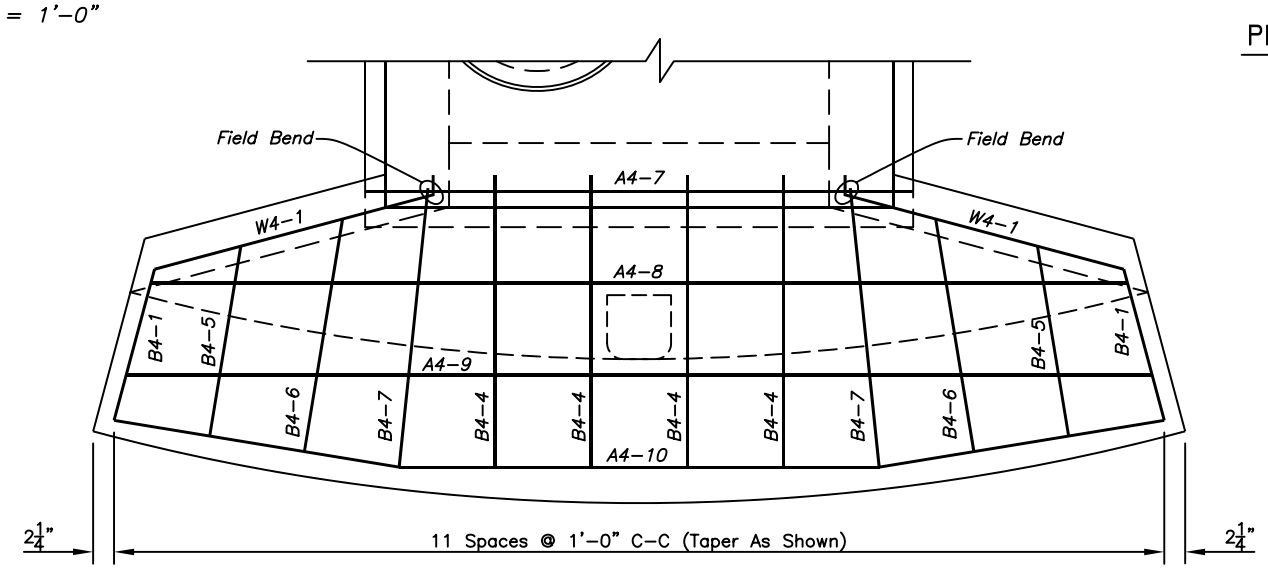

PLAN - APRON REINFORCEMENT

Scale: 1/2" = 1'-0"

1/2"

stormwater details/type br-1 inlet

No.	DATE	REVISIONS	No.	DATE	REVISIONS
3			6		
2			5		
1			4		

DES: Storm
DRN: Storm
CKD:
DATE: 7/03

CITY of TAMPA
STORMWATER DEPARTMENT

STANDARD INLET DETAILS
TYPE BR-I CURB INLET

W.O.

SHEET 18 OF 30

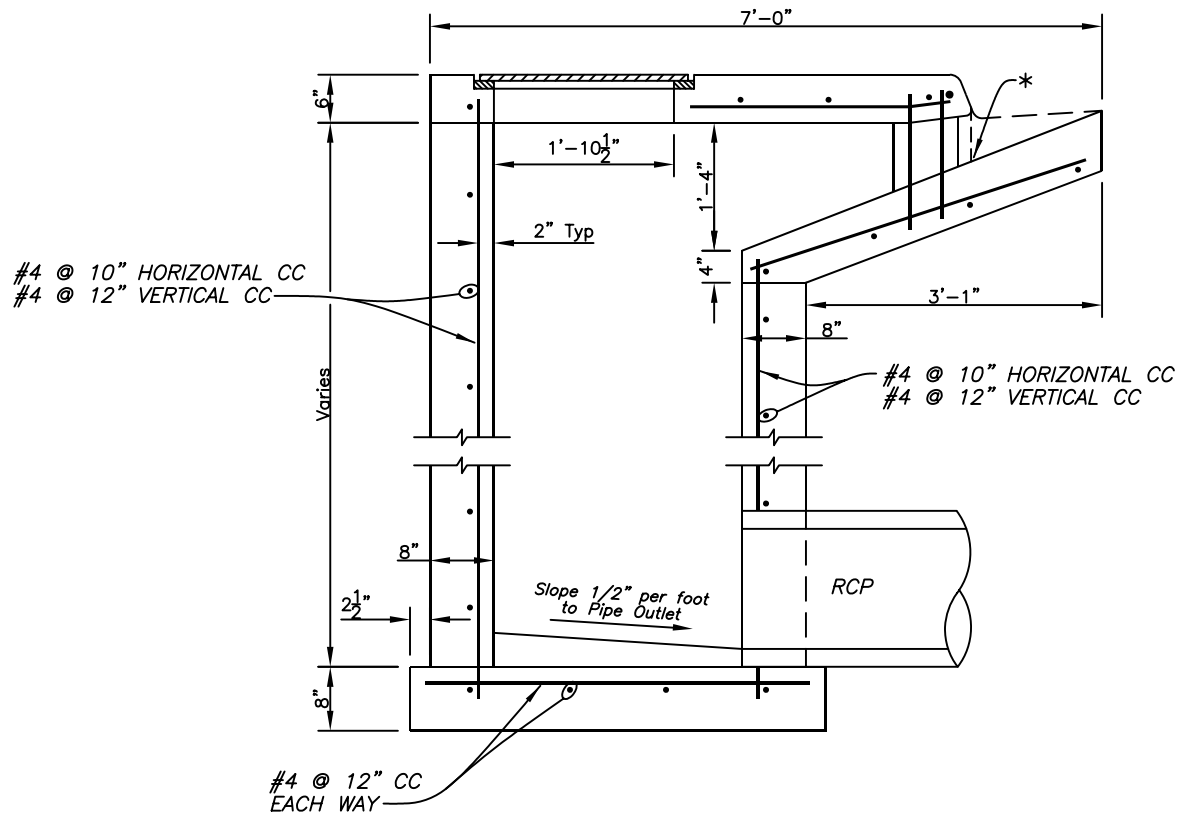

SECTION A-A

Scale: 1/2" = 1'-0"

* LOCATION OF THROAT ELEVATION

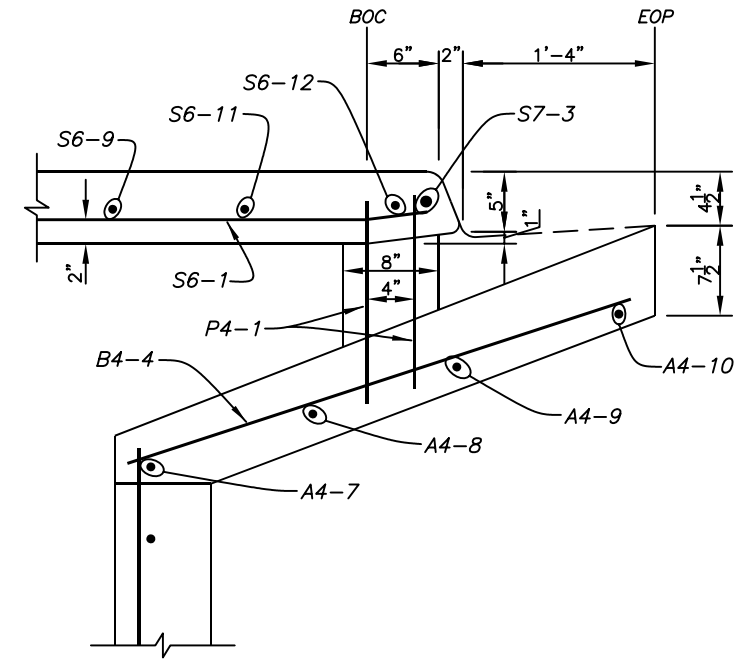

SECTION B-B

Scale: 3/4" = 1'-0"

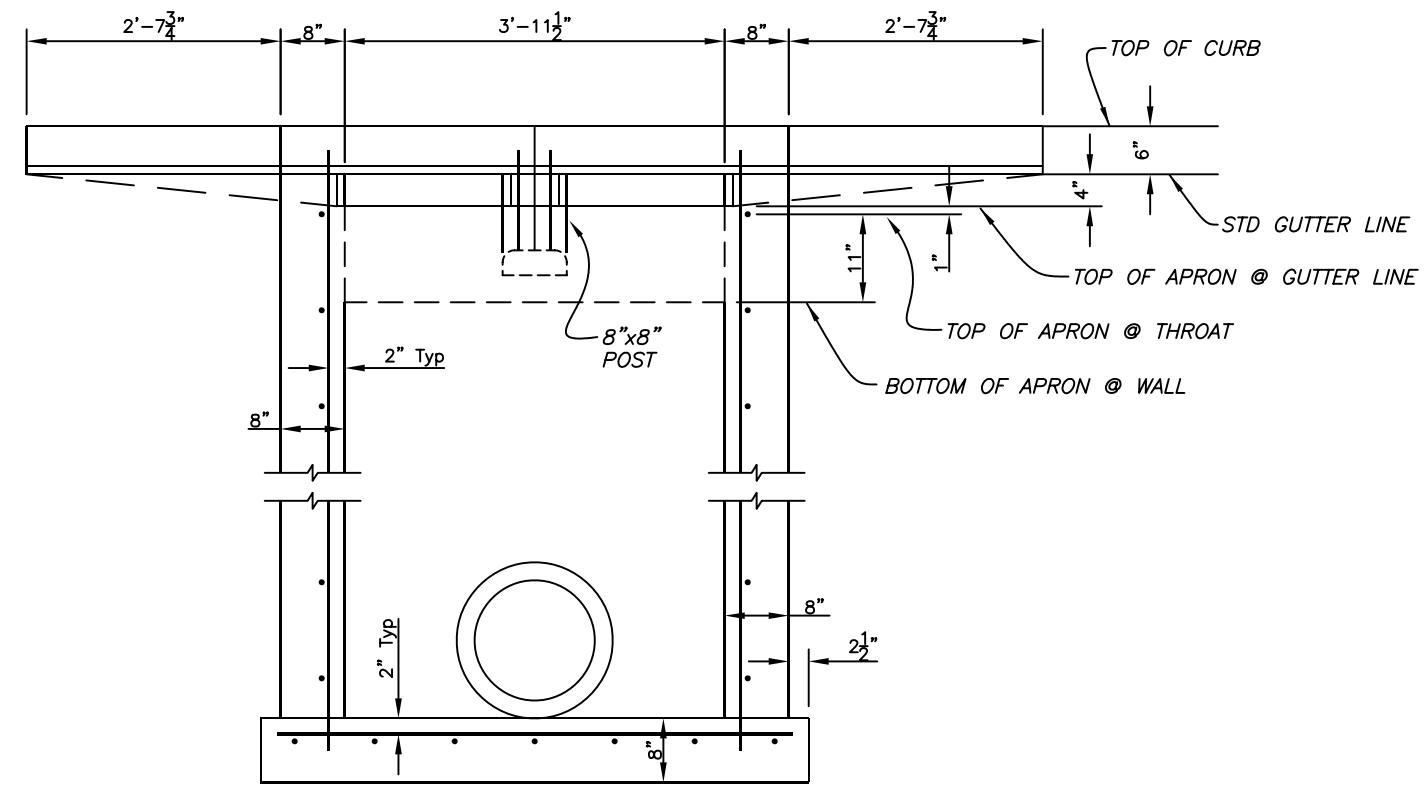

SECTION C-C

Scale: 1/2" = 1'-0"

SCHEDULE OF REINFORCING STEEL BARS (FOR INLET TOP AND APRON ONLY)

MARK	SIZE	COUNT	LENGTH	WT EACH	TOTAL WT	MARK	SIZE	COUNT	LENGTH	WT EACH	TOTAL WT
A4-7	No 4	1	5' 4"	3.562	3.562	S6-1	No 6	3	5' 3"	7.886	23.657
A4-8	No 4	1	10' 3 1/2"	6.875	6.875	S6-2	No 6	2	2' 11"	4.381	8.763
A4-9	No 4	1	10' 9 1/2"	7.209	7.209	S6-3	No 6	2	1' 2 1/2"	1.814	3.629
A4-10	No 4	1	11' 2 1/2"	7.487	7.487	S6-9	No 6	4	4' 11 1/2"	7.447	29.788
B4-1	No 4	2	2' 9"	1.837	3.674	S6-10	No 6	2	2' 6"	3.755	7.510
B4-4	No 4	4	3' 6 3/4"	2.380	9.520	S6-11	No 6	1	9' 7"	14.394	14.394
B4-5	No 4	2	3' 3 1/2"	2.199	4.398	S6-12	No 6	1	10' 2"	15.271	15.271
B4-6	No 4	2	4' 0 3/4"	2.714	5.428	S6-13	No 6	2	5' 1 1/2"	7.698	15.396
B4-7	No 4	2	4' 10 1/2"	3.257	6.513	S6-14	No 6	1	5' 2 1/2"	7.822	7.822
P4-1	No 4	4	1' 3"	0.835	3.340	S7-3	No 7	1	10' 4 3/4"	21.249	21.249
						W4-1	No 4	4	3' 6"	2.338	9.352
TOTAL WEIGHT IN POUNDS											214.837

1/2"

stormwater details/type br-1 inlet

No.	DATE	REVISIONS	No.	DATE	REVISIONS
3			6		
2			5		
1			4		

DES: Storm
DRN: Storm
CKD:
DATE: 7/03

CITY of TAMPA
STORMWATER DEPARTMENT

STANDARD INLET DETAILS
TYPE BR-I CURB INLET

W.O.

SHEET 19 OF 30

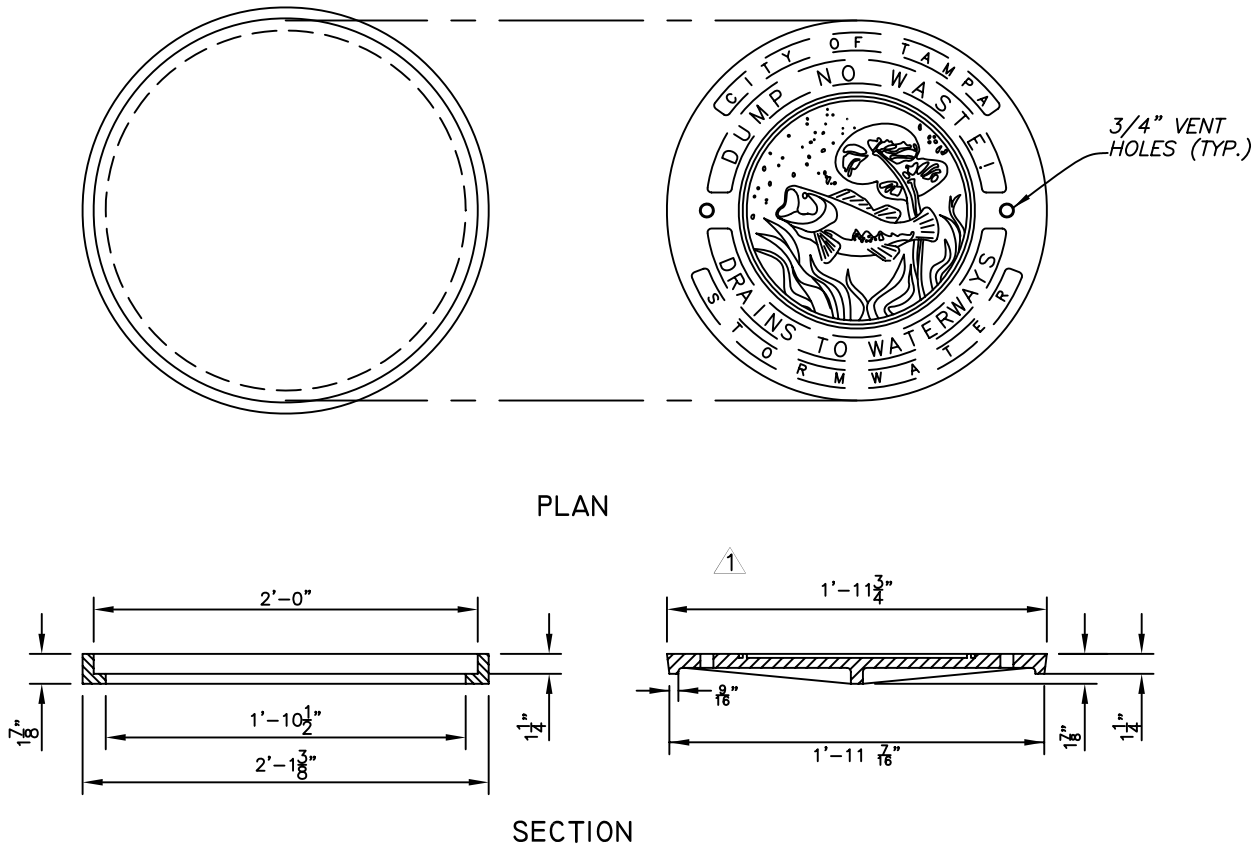

STANDARD CAST IRON INLET RING AND COVER

Scale: 1" = 1'-0"

CURB INLET CONSTRUCTION NOTES
TYPES 1,2,3 AND BS-1, BV-1, BR-1, BR-2

1. Concrete for top slabs, bottom slabs, walls, aprons and curb-and-gutter transition sections shall be Class II Concrete, conforming to Section 346 of the project specifications, with reinforcing bars placement and spacing as indicated herein. Top slabs shall not be poured until all reinforcing bars have been placed, inspected and approval obtained.

2. Curb inlets are typically designed with the outlet pipe at the front wall of the structure. Otherwise, maximum pipe size that will fit the side wall of any standard curb inlet is 24 inches. Larger pipe sizes and 24-inch pipes meeting the side wall at an angle other than 90 degrees require a larger substructure. Curb inlets may be modified to utilize inlet risers and tops meeting City inlet standards with substructures meeting FDOT standards for structure bottoms (Index #200). Design of these non-standard inlet structures shall be on case-specific basis.

3. Refer to FDOT Standard Index #200 for reinforcing steel requirements at pipe openings. Any portion of the pipe protruding beyond the inside wall surface of the box shall be broken off and mortared to a smooth finish flush with the inside wall surface.

4. At the discretion of the Engineer, boxes may be constructed of solid clay or portland cement concrete brick and mortar. The inside surface of all brick walls shall be plastered with one-half inch minimum thickness of 1:2 mix sand-cement mortar and left with a smooth finish.

5. Minimum brick wall thickness shall be 7½ inches when the distance (depth) from the rim of the cast ring and cover to the top of the bottom slab does not exceed 8 feet, and shall be 12 inches when such depth exceeds 8 feet. Brick shall be laid in stretcher courses with every sixth course a header course.

6. Minimum clearance for all reinforcing bars shall be 1½ inches from the nearest surface of the concrete member. Top slab reinforcement shall be 2 inches from the bottom of the slab. Other minimum clearances are as shown in drawings.

7. Wing for inlet Types 2, BS-1 and BR-2 shall be placed on the upstream side of the center of box, with plan reversed if necessary because of the direction of gutter flow.

8. Curb transition sections shall be included in the contract price of the inlet, and no separate payment shall be made.

9. Top slab of all curb inlets shall be sloped at 2 percent toward the street.

10. Dimensions shown for inlet types BR-1 and BR-2 are for the indicated curb radius only. Chord dimensions at the curb shall remain constant for other curb radii. Contractor shall adjust other inlet dimensions and reinforcing steel quantities to fit actual curb radius shown in the project plans.

11. Reinforcing steel shall be ASTM Grade 60. Ring and cover material shall be ASTM-A48 Class 30 B Gray Iron.

12. Inlet cover weight is 85 lbs. (approximate).

13. All construction joints shall follow FDOT Standard Index #201.

14. Side openings (slots) for curb inlets are to be used on Type 1 inlets (offset) only. Rear openings (slots) may be used on any curb inlet type. Refer to Sheet 10 for guidance.

15. Refer to Section 425 of the project specifications for additional requirements.

NOTE TO ENGINEER:
Inlet types BS-1 and BV-1 shall be the preferred types for application on tangents. Inlet types 1, 2 and 3 shall only be used when dictated by conditions that would preclude the use of types BS-1 and BV-1.

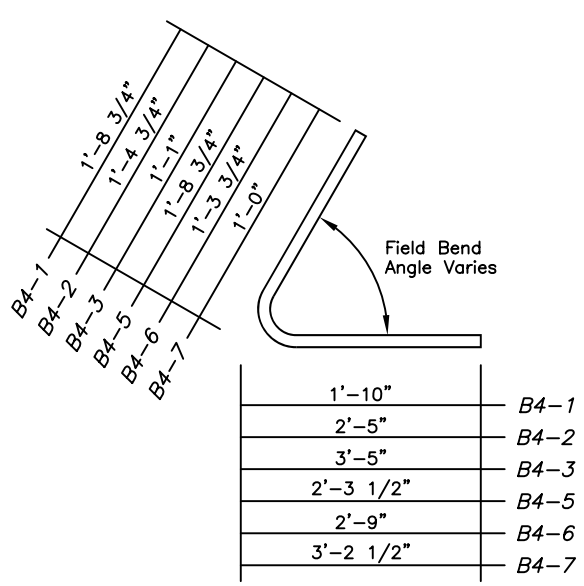

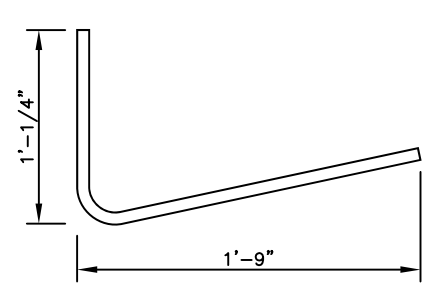

A4-2

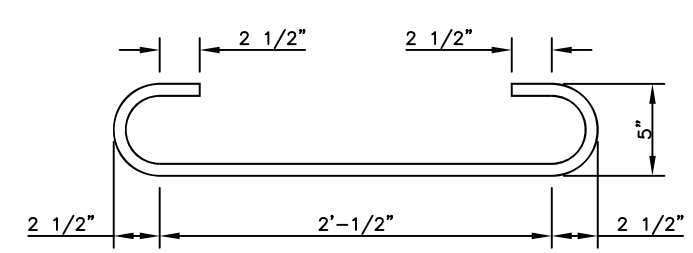

B6-1

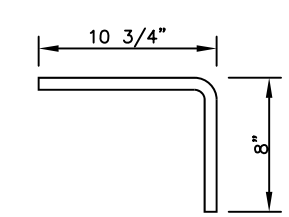

T6-5

BENDING DIAGRAMS

Not To Scale

No.	DATE	REVISIONS	No.	DATE	REVISIONS
3			6		
2			5		
1	12/09/04	REVISED COVER DIMENSIONS	4		

DES: Storm
DRN: Storm
CKD:
DATE: 7/03

CITY of TAMPA
STORMWATER DEPARTMENT

STANDARD INLET DETAILS

W.O.
SHEET 20 OF 30

1/2"

stormwater details/ gen info

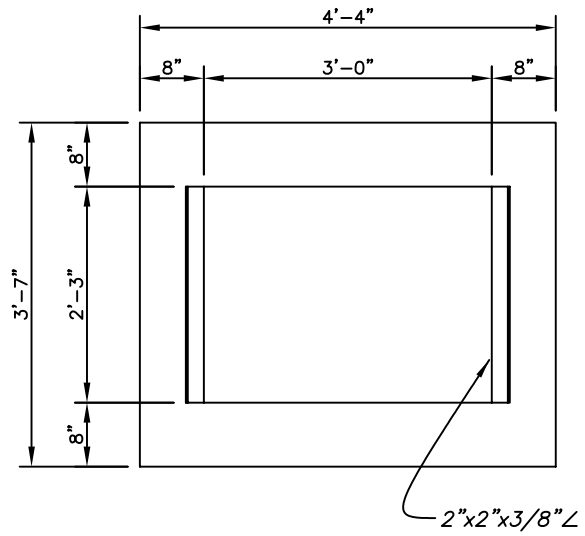

PLAN

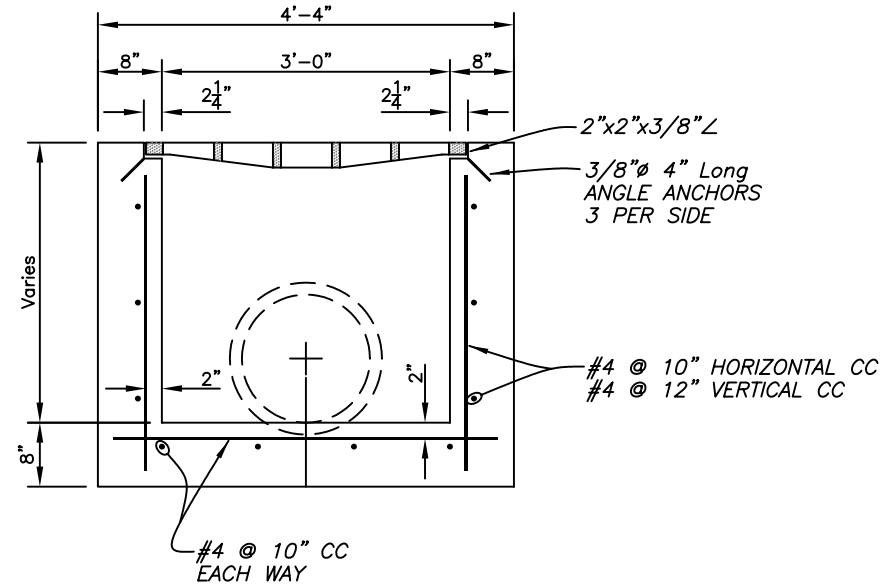

SECTION

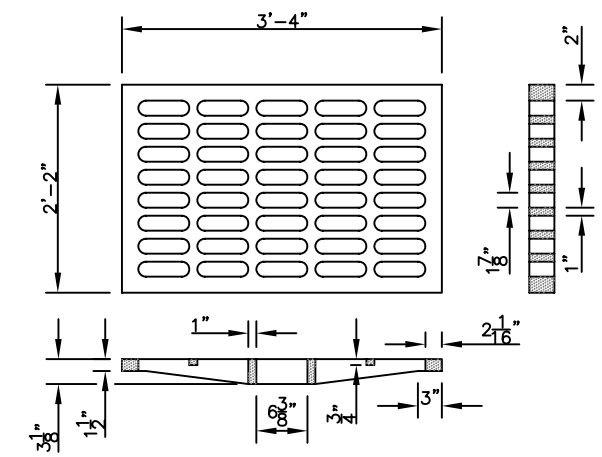

CAST IRON GRATING

Traffic Bearing

TYPE "T" GRATE INLET

Scale: 1/2" = 1'-0"

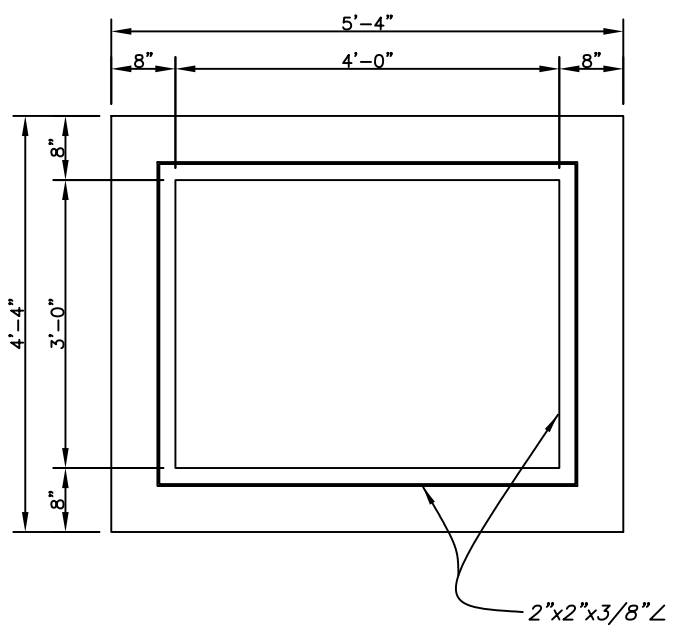

PLAN

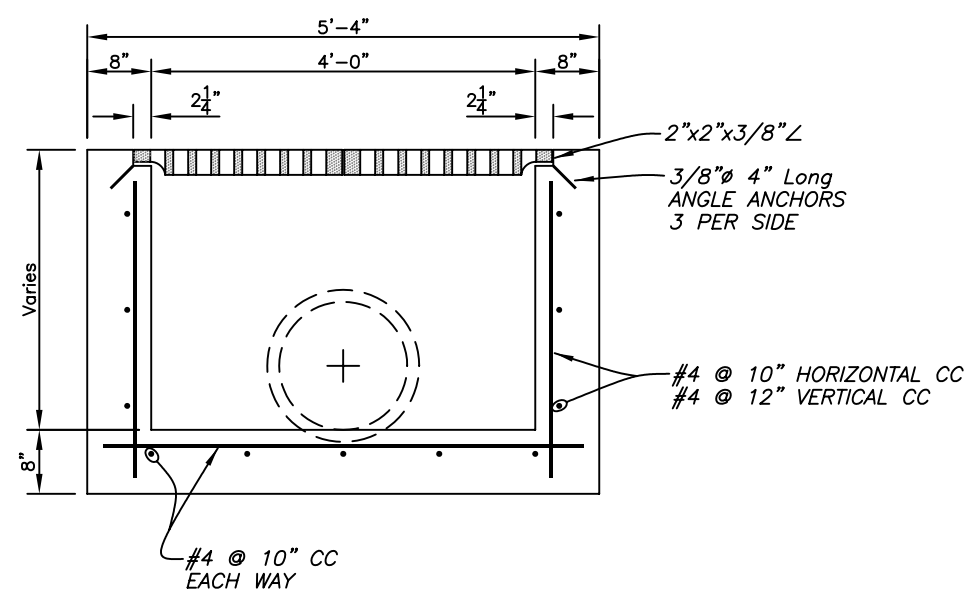

SECTION

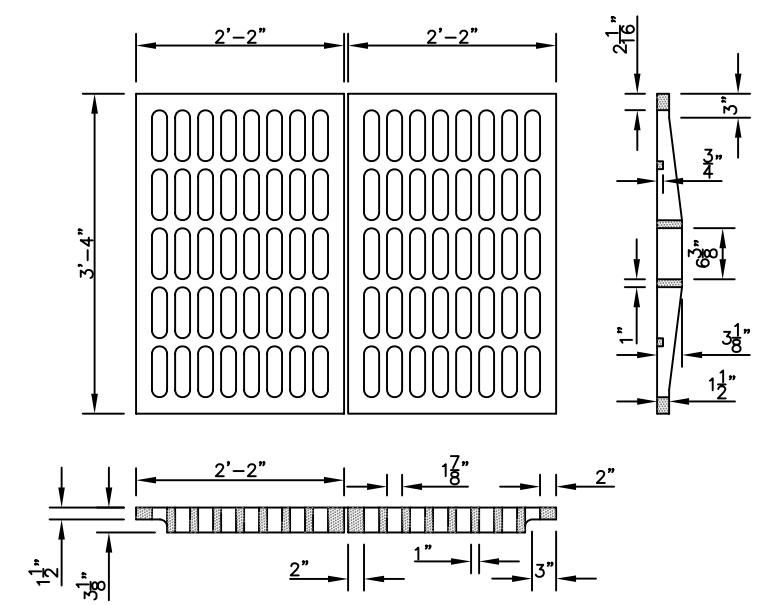

CAST IRON GRATING

Traffic Bearing

TYPE "E" GRATE INLET

Scale: 1/2" = 1'-0"

No.	DATE	REVISIONS	No.	DATE	REVISIONS
3			6		
2			5		
1			4		

DES: Storm
DRN: Storm
CKD:
DATE: 7/03

CITY of TAMPA
STORMWATER DEPARTMENT

STANDARD INLET DETAILS
TYPE "T" & "E" GRATE INLET

W.O.
SHEET 21 OF 30

1/2"

stormwater details/grate inlet

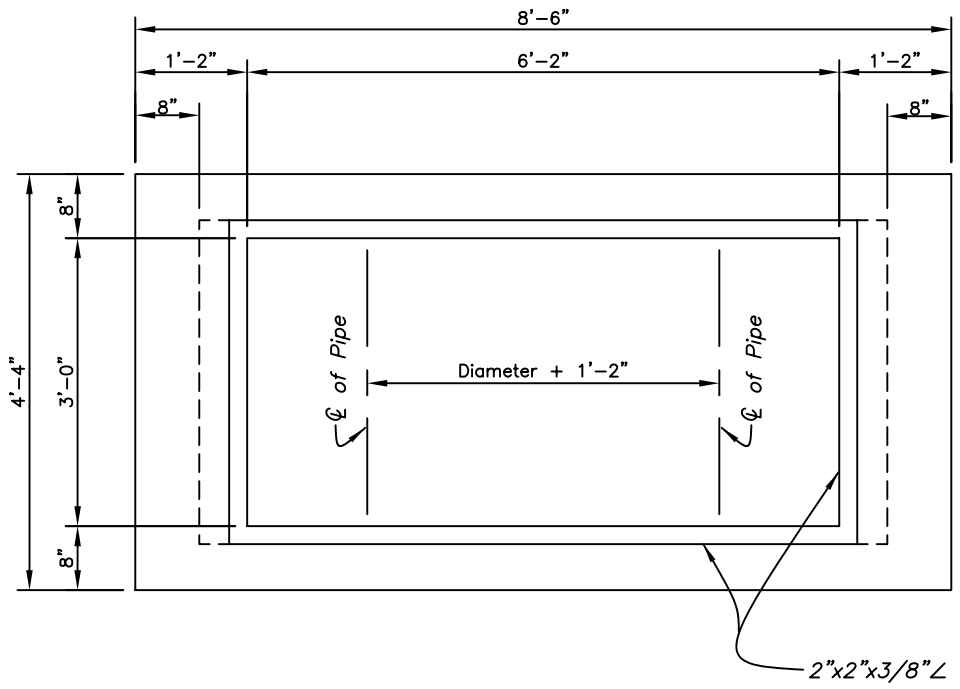

PLAN

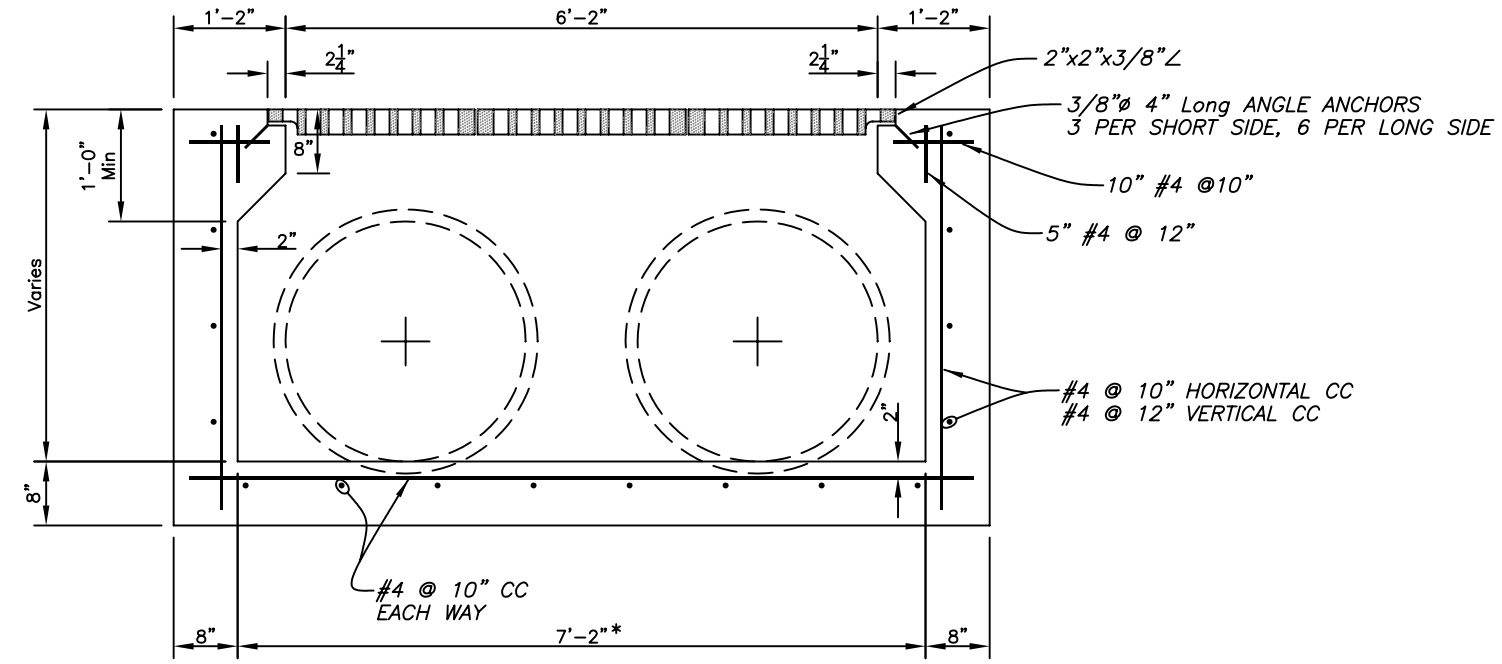

SECTION

* WHEREVER POSSIBLE. 6'-2"x3'-0" INSIDE DIMENSION BOX MAY BE USED WITH THE ENGINEER'S APPROVAL.

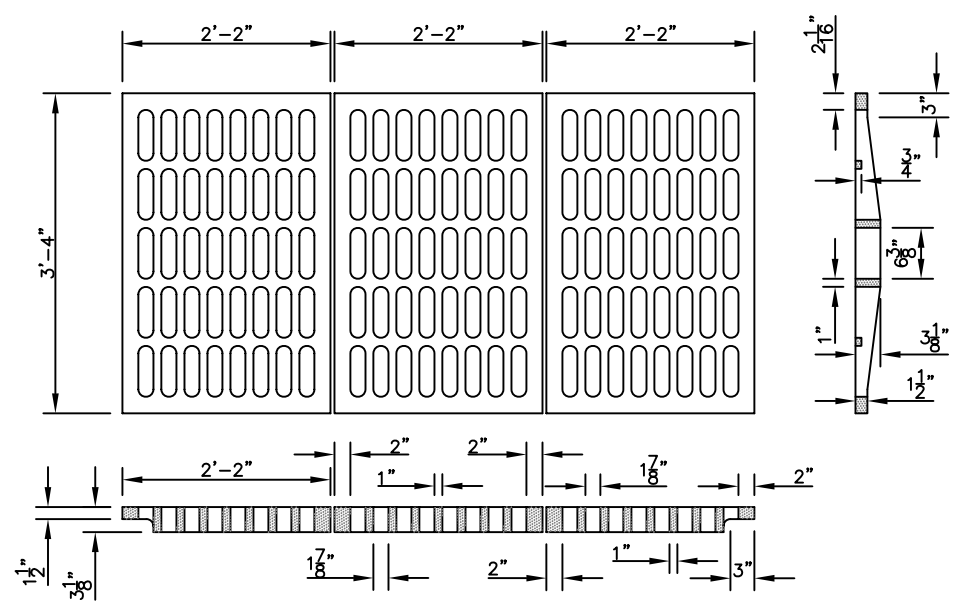

CAST IRON GRATING

Traffic Bearing

NOTE:
IF SIDE OPENINGS (SLOTS) ARE DESIRED IN GRATE INLETS, OPENINGS SHALL BE DESIGNED ON A CASE-BY-CASE BASIS, AND SHALL ACCOUNT FOR SUPPORT OF THE CAST IRON GRATE ABOVE THE OPENING.

TYPE "H" GRATE INLET

Scale: 1/2" = 1'-0"

1/2"

stormwater details/grate inlet

No.	DATE	REVISIONS	No.	DATE	REVISIONS
3			6		
2			5		
1			4		

DES: Storm
DRN: Storm
CKD:
DATE: 7/03

CITY of TAMPA
STORMWATER DEPARTMENT

STANDARD INLET DETAILS
TYPE H GRATE INLET

W.O.

SHEET 22 OF 30

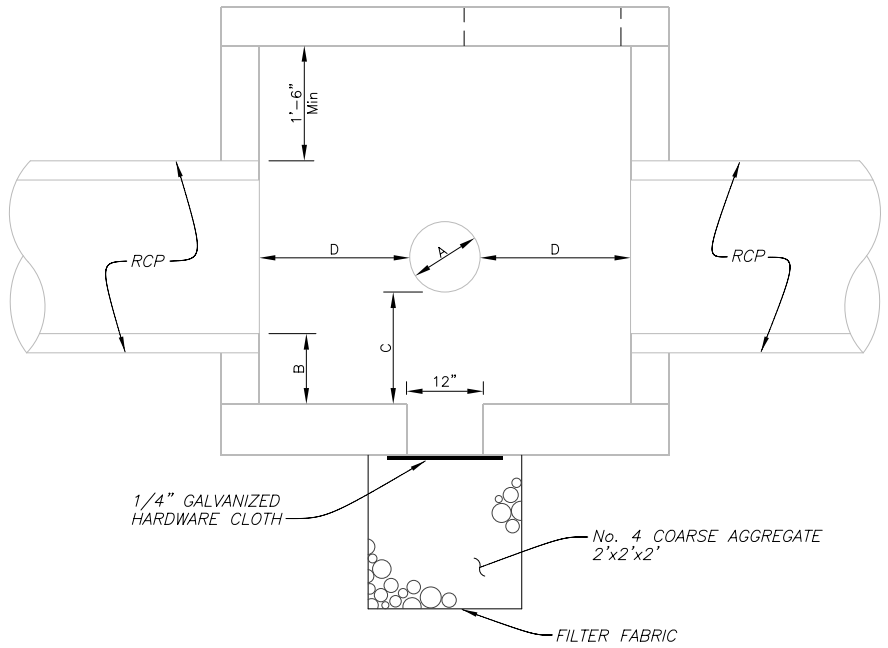

B=A
C=1'-6" Minimum
(Use the greater of the two)

CONFLICT AT MID-POINT

Not To Scale

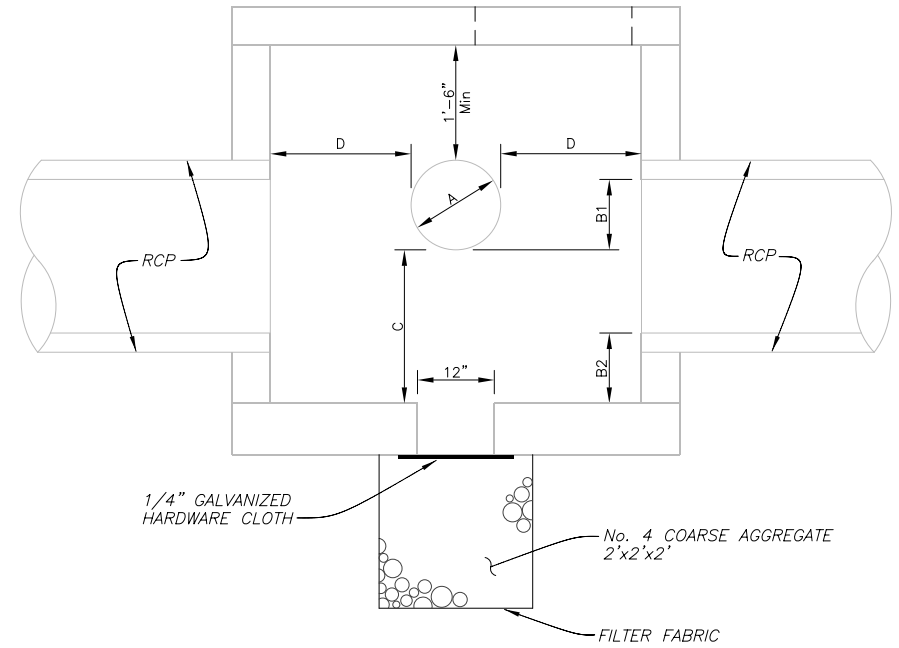

B2=B1
C=1'-6" Minimum
(Use the greater of the two)

CONFLICT AT CROWN

Not To Scale

NOTES

1. Conflict manhole shop drawing shall be submitted to the Engineer for approval prior to fabrication or beginning of any work on the conflict manhole.

2. The structural design shall be consistent with FDOT Index 200 and as approved by the Engineer.

2 3. For conflict structures with sanitary sewer(s.s.) pipes the following shall apply:

   If the s.s. pipe is below the flowline of the storm pipe, replace the s.s. pipe with AWWA C-900 DR-18 Green and embed it in the sump with non-shrink grout. Connect the C-900 to the existing pipe with Fernco adapters.

   If the s.s. pipe is above the flowline of the storm pipe, replace the s.s. pipe with AWWA C-900 DR-18 Green or ASTM 3034 SDR-35 or SDR-26 pipe and encase it in the smallest diameter steel casing pipe possible that will accomodate Cascade casing spacers. The steel casing shall be in compliance with Section W-67, "Steel Pipe And Fittings". Connect the new PVC pipe to the existing pipe with Fernco adapters.

4. Conflicting water mains shall be sleeved if a joint in the pipeline falls within the conflict structure.

5. Filter fabric shall meet FDOT Standard Specification 441-2.3.

A = Outside diameter of the conflicting utility line or sleeve.

D = 2'-0" or 1/2(A) whichever is greater.

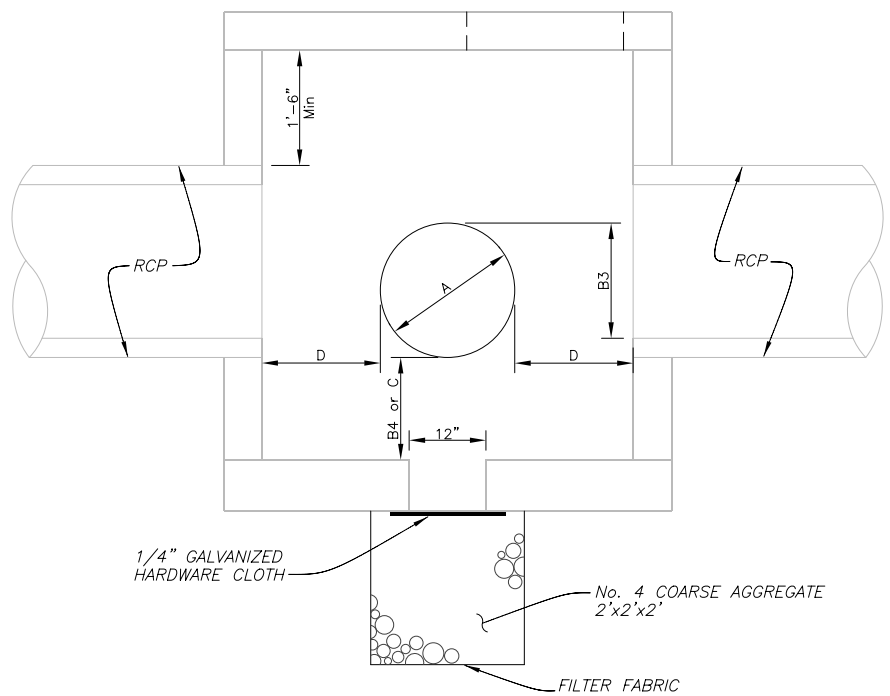

B4=B3
C=1'-6" Minimum
(Use the greater of the two)

CONFLICT AT FLOWLINE

Not To Scale

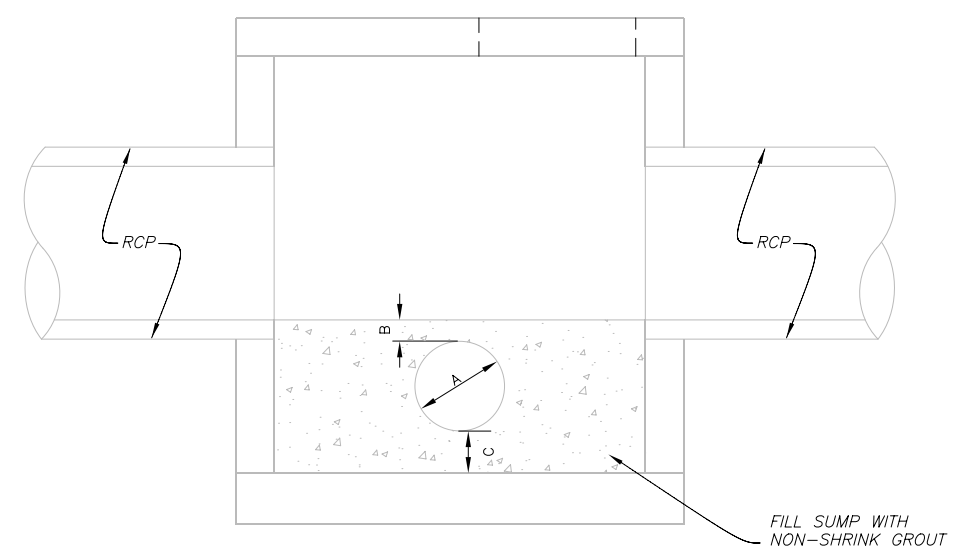

C=B

CONFLICT BELOW FLOWLINE
1 WITH INSUFFICIENT CLEARANCE

Not To Scale

No.	DATE	REVISIONS	No.	DATE	REVISIONS
3			6		
2	4/26/07	Revised note 3	5		
1	12/09/04	ADDED CONFLICT BELOW FLOW LINE	4		

DES: Storm
DRN: Storm
CKD:
DATE: 7/03

CITY of TAMPA
STORMWATER DEPARTMENT

GUIDELINES FOR CONFLICT MANHOLES

W.O.

SHEET 23 OF 30

1/2"

stormwater details/conflict manhole

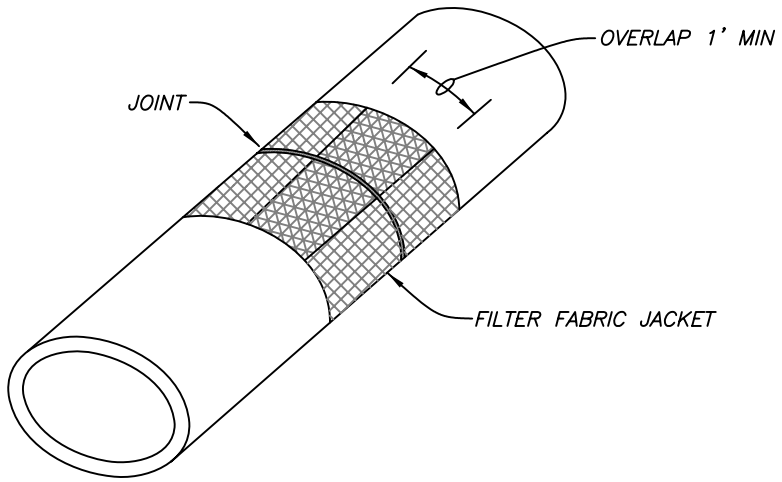

ISOMETRIC VIEW

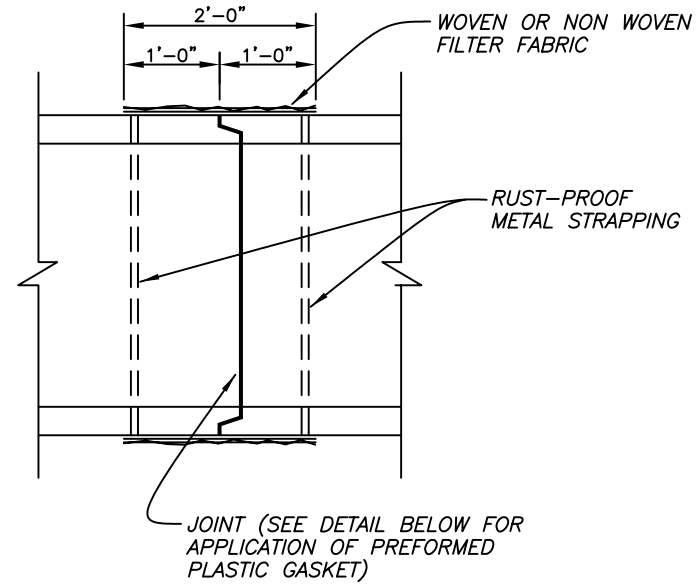

PIPE SECTION

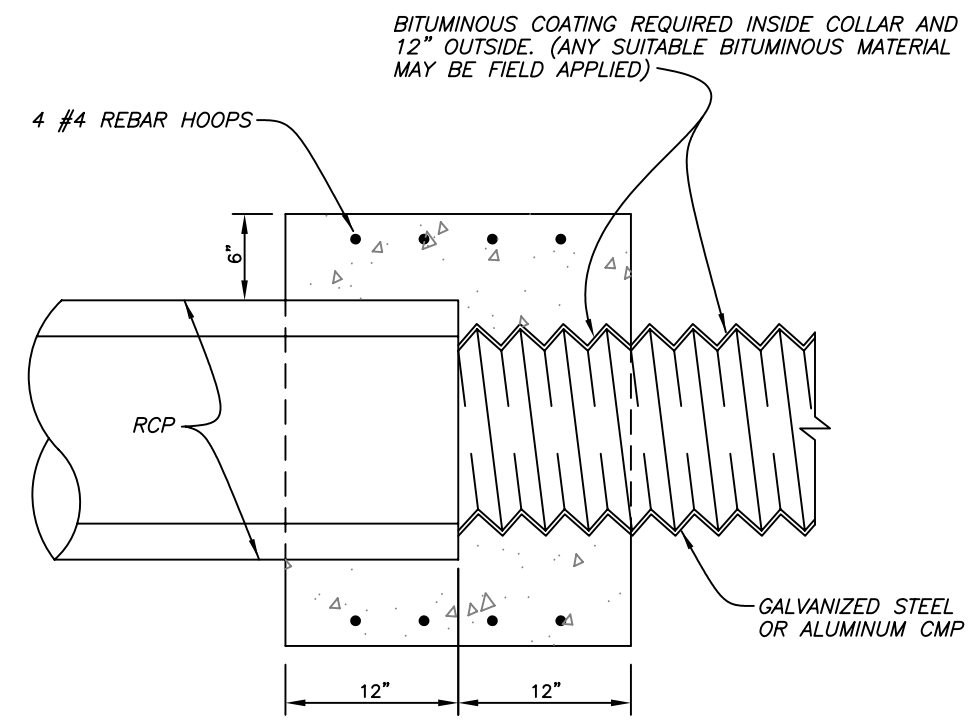

CONCRETE JACKET FOR CONNECTING DISSIMILAR TYPES OF PIPES

Not To Scale

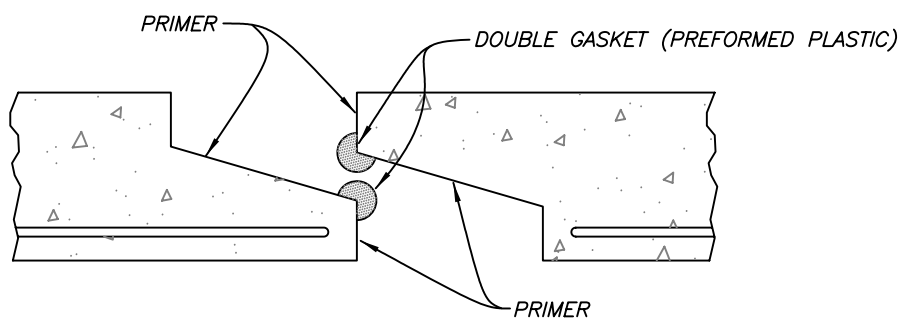

JOINT SECTION (BEFORE PULL-UP)

ELLIPTICAL CONCRETE PIPE JOINTS

Not To Scale

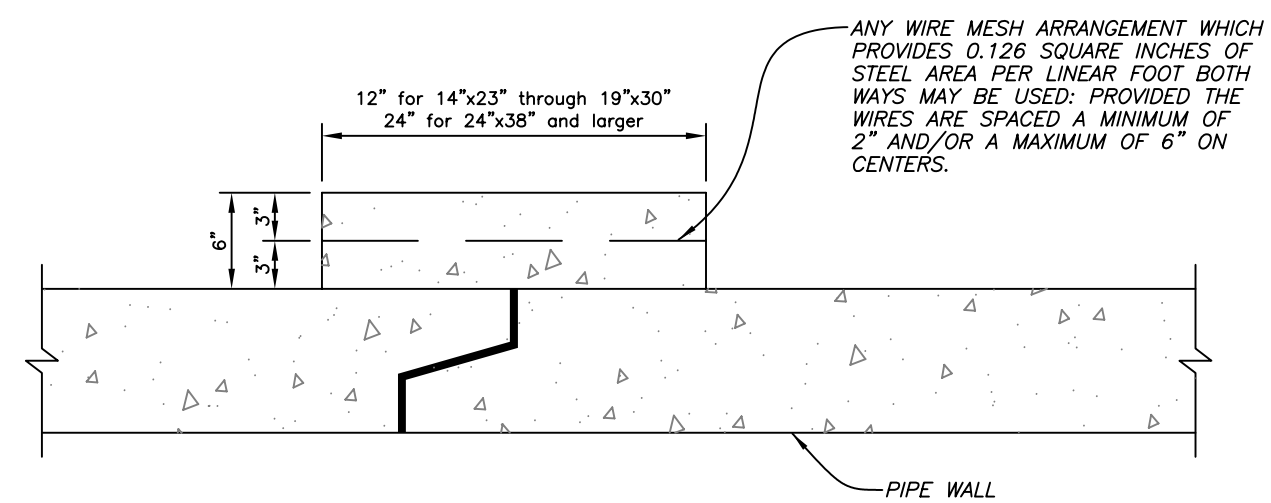

ELLIPTICAL CONCRETE PIPE JACKET

Not To Scale

NOTES:

1. Either filter fabric or concrete jacket shall be provided at any single joint (not both).
2. Concrete jacket shall be provided at least at the last two joints before the outfall end if the pipe is not secured by an end wall. Engineer may specify concrete jacket at other joints.
3. Cost of concrete jacket and filter fabric jacket are to be included in the cost of elliptical pipe culverts.
4. Filter fabric shall meet FDOT Standard Specification 441-2.3.

1/2"

stormwater idetails/ misc details

No.	DATE	REVISIONS	No.	DATE	REVISIONS
3			6		
2			5		
1			4		

DES: Storm
DRN: Storm
CKD:
DATE: 7/03

CITY of TAMPA
STORMWATER DEPARTMENT

MISCELLANEOUS DETAILS

W.O.

SHEET 24 OF 30

NOTE:
Spigot end to be placed in existing end wall regardless of direction of flow.

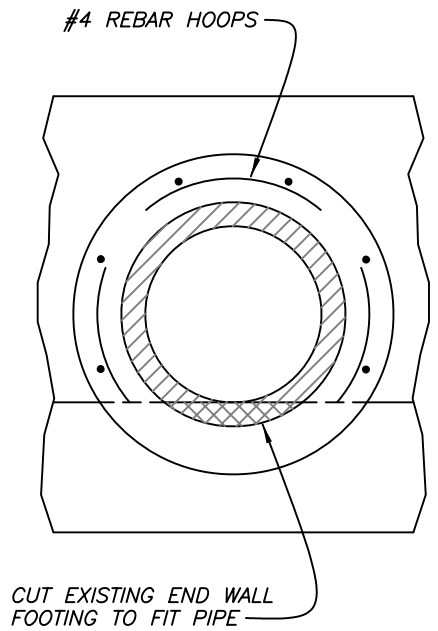

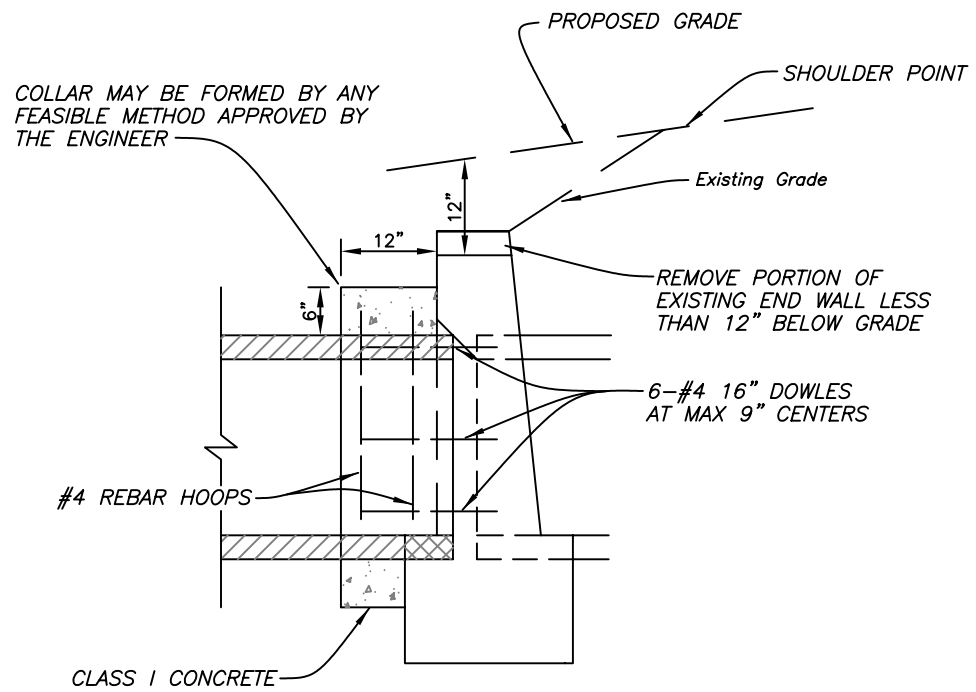

CONCRETE COLLAR FOR EXTENSION OF EXISTING PIPE CULVERT

Not To Scale

NOTE:
Guards to be constructed only at locations specified in detail plans

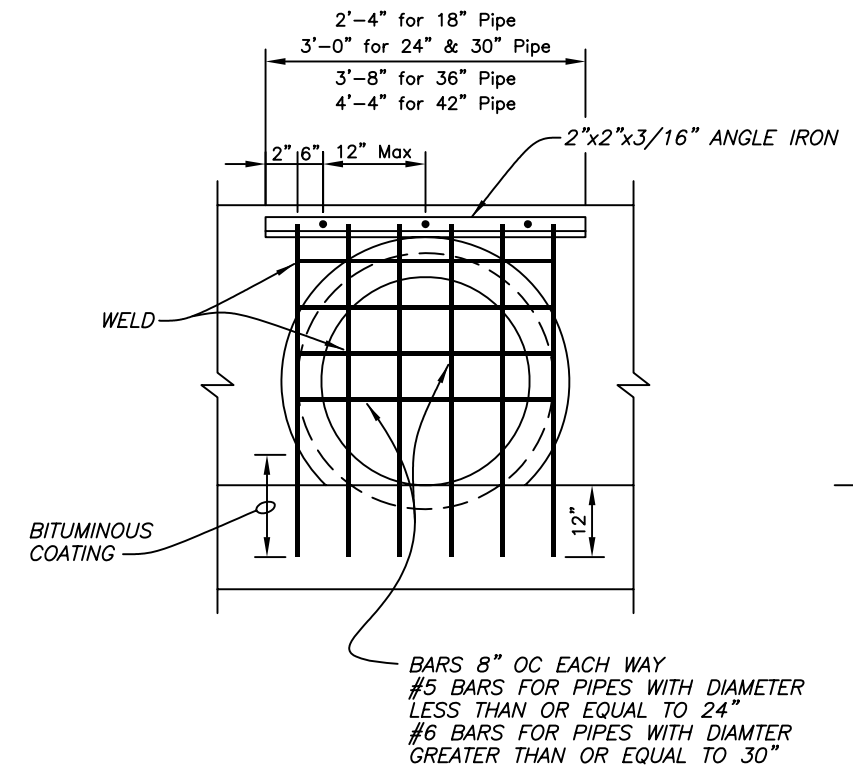

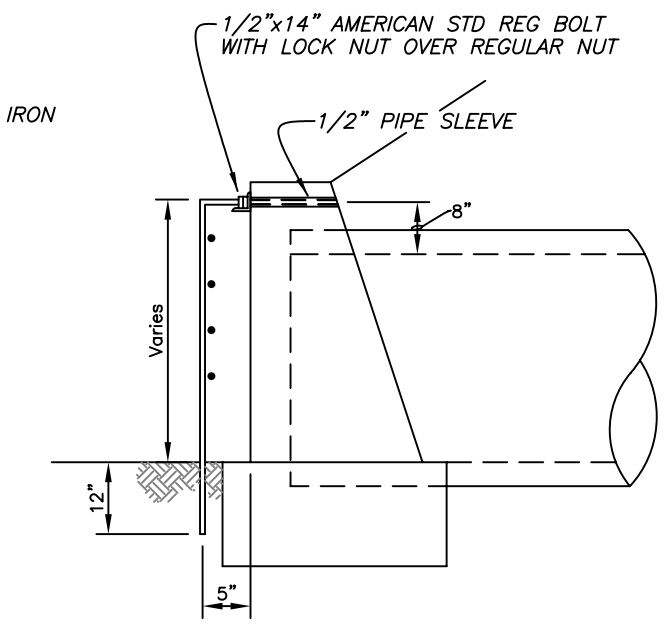

GUARD AT PIPE ENDS

Not To Scale

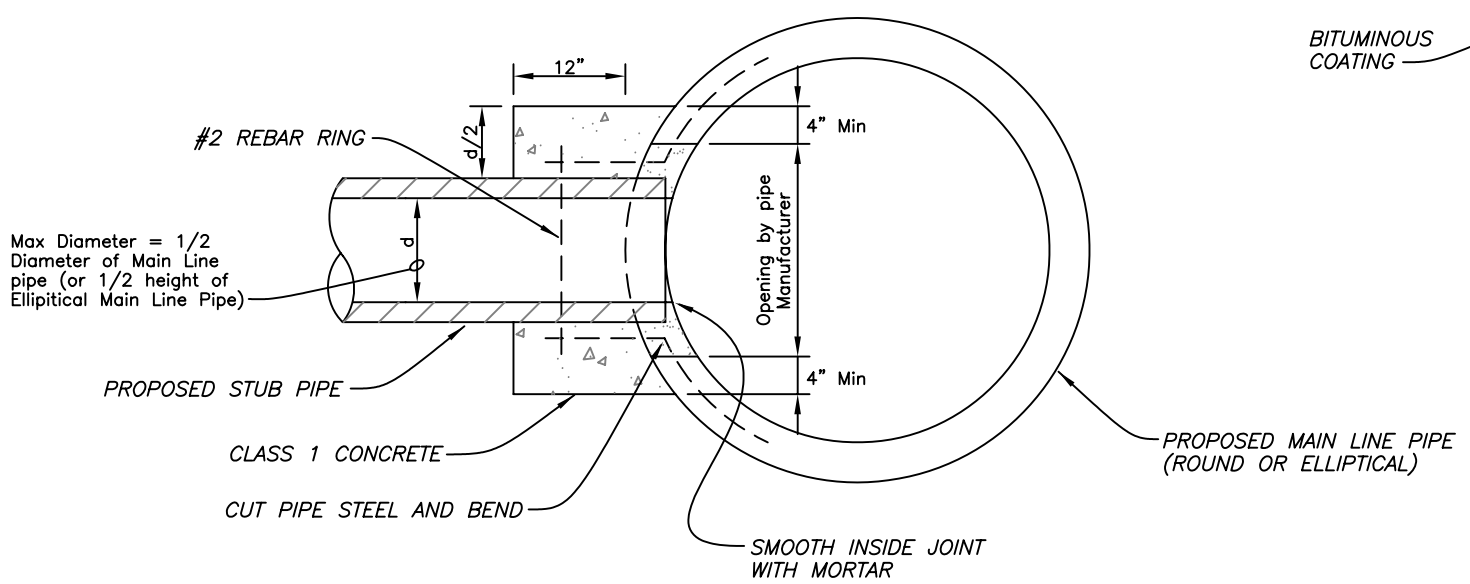

CONCRETE COLLAR FOR JOINING MAINLINE PIPE AND STUB PIPE

Not To Scale

1/2"

stormwater idetails/ misc details

No.	DATE	REVISIONS	No.	DATE	REVISIONS
3			6		
2			5		
1			4		

DES: Storm
DRN: Storm
CKD:
DATE: 7/03

CITY of TAMPA
STORMWATER DEPARTMENT

MISCELLANEOUS DETAILS

W.O.

SHEET 25 OF 30

NOTE:

1. Open–bottom inlet shown herein is intended to be used at portable–pump locations (see temporary force main and pumping standards). For other open–bottom inlet applications, refer to FDOT Index #201 for guidance.
2. Follow Type "E" grate inlet standard for steel reinforcement of concrete.
3. For grate type and dimensions see Type "E" grate inlet standard.
4. A similar open–bottom substructure may be used in conjunction with City of Tampa curb type open–bottom inlets.
5. River gravel shall be clean and conform to D.O.T. specifications under Section 901–2 and shall meet ASTM size no. 4 gradation (1–1/2" to 3/4" size).
6. All exposed concrete corners and edges shall be chamfered 3/4".
7. Filter fabric shall meet FDOT Standard Specification 441–2.3.

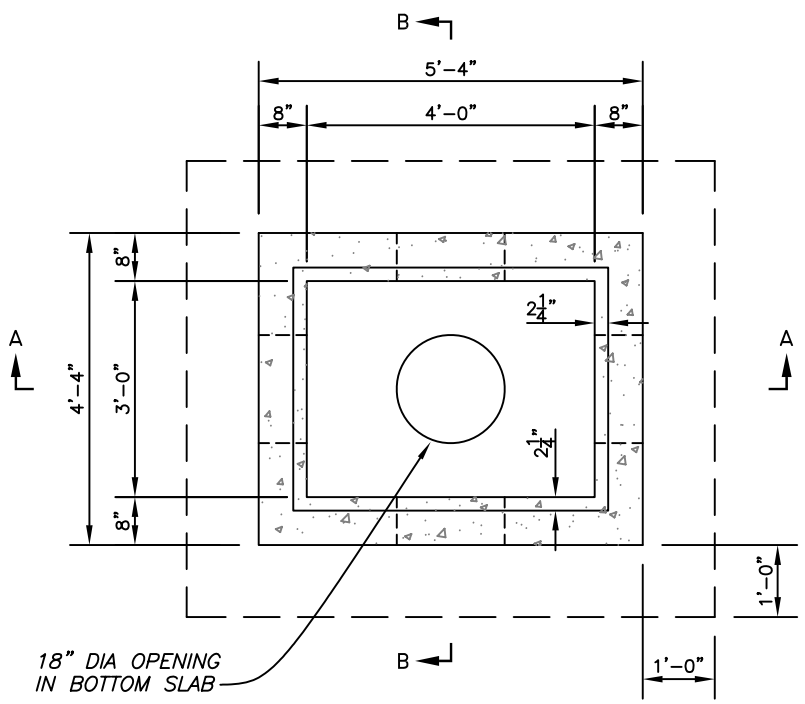

PLAN
Scale: 3/8" = 1'–0"

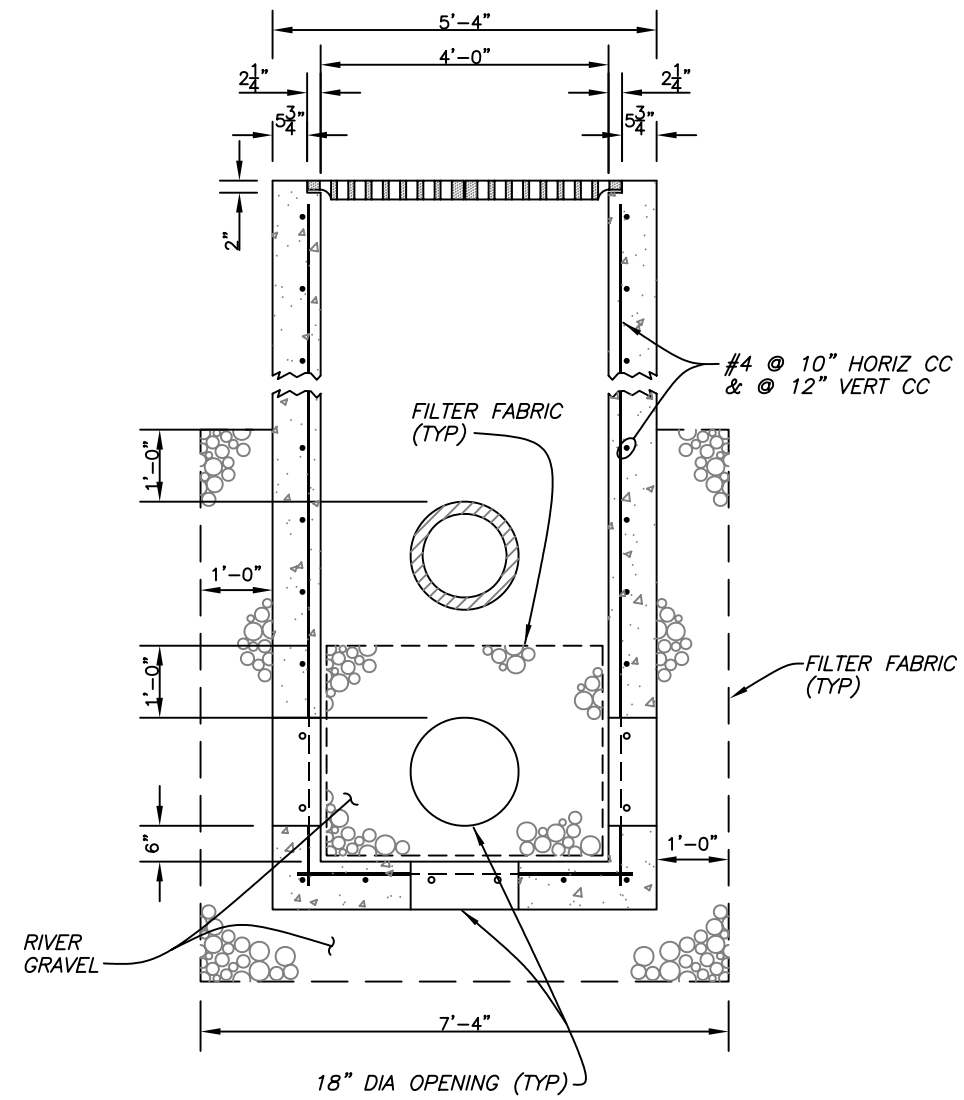

SECTION A-A
Scale: 3/8" = 1'–0"

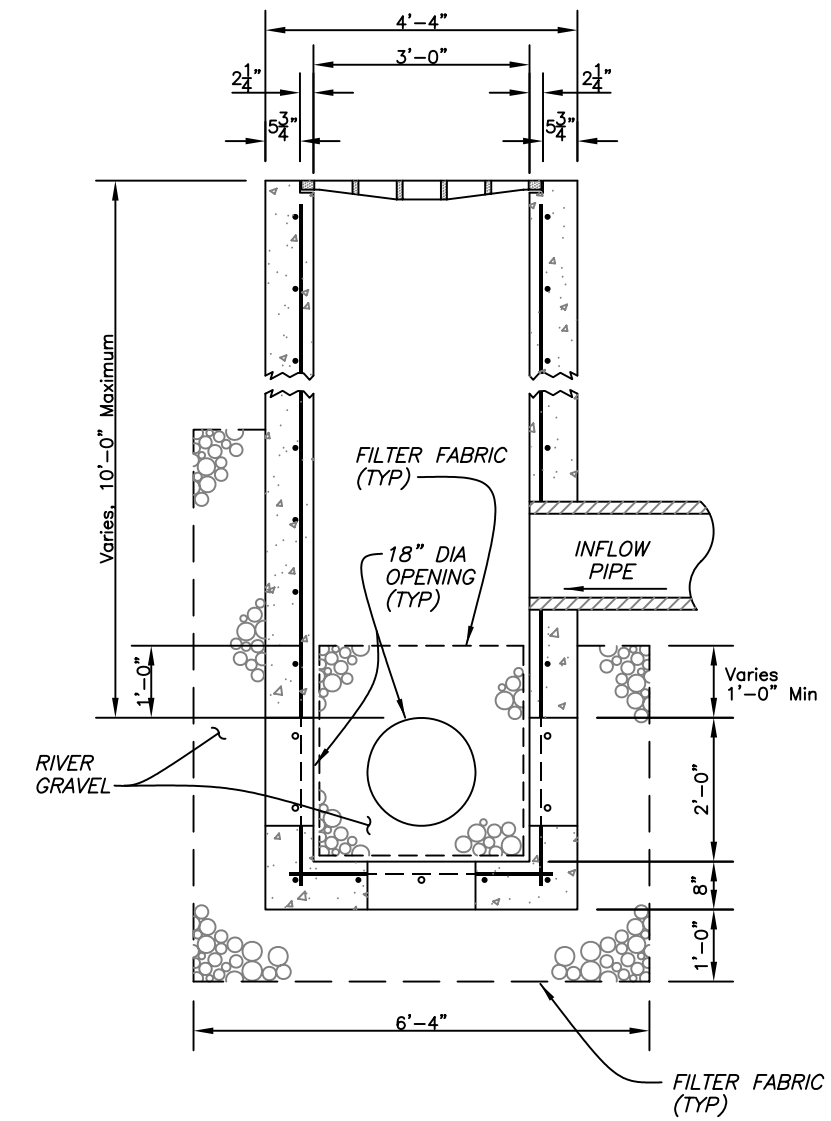

SECTION B-B
Scale: 3/8" = 1'–0"

3/8"

stormwaterdetails/open bottom

No.	DATE	REVISIONS	No.	DATE	REVISIONS
3			6		
2			5		
1			4		

DES: Storm
DRN: Storm
CKD:
DATE: 7/03

CITY of TAMPA
STORMWATER DEPARTMENT

STANDARD INLET DETAILS
OPEN BOTTOM INLET (TYPE "E")

W.O.

SHEET 26 OF 30

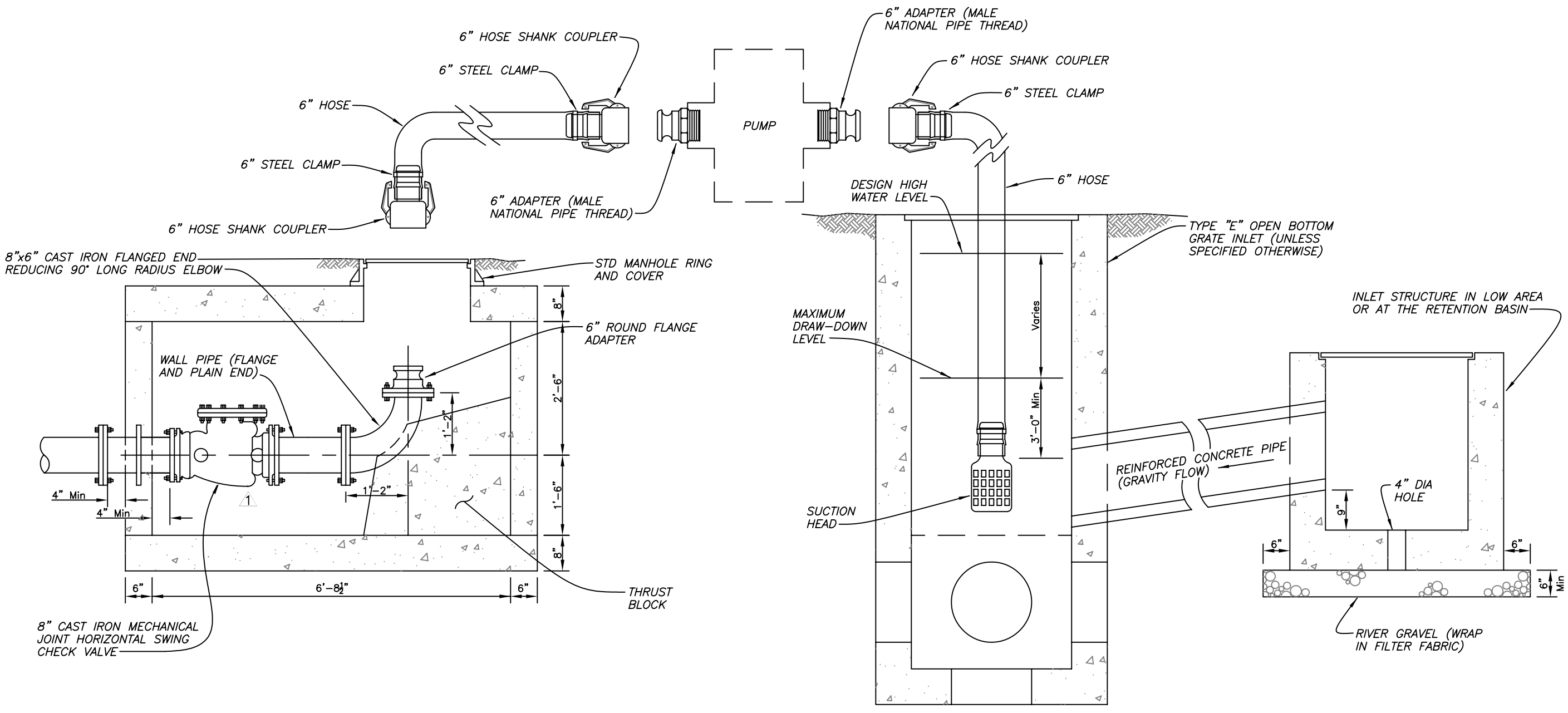

SECTION

Scale: 1/2" = 1'-0"

1/2"

stormwater idetails/temp pump

No.	DATE	REVISIONS	No.	DATE	REVISIONS
3			6		
2			5		
1	12/09/04	INCLUDED VALVE IN VAULT	4		

DES: Storm
DRN: Storm
CKD:
DATE:

CITY of TAMPA
STORMWATER DEPARTMENT

TEMPORARY FORCE MAIN AND PUMPING STANDARDS

W.O.

SHEET 27 OF 30

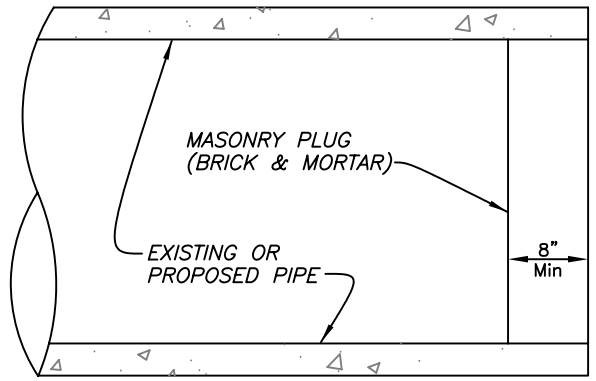

PIPE PLUG

Not To Scale

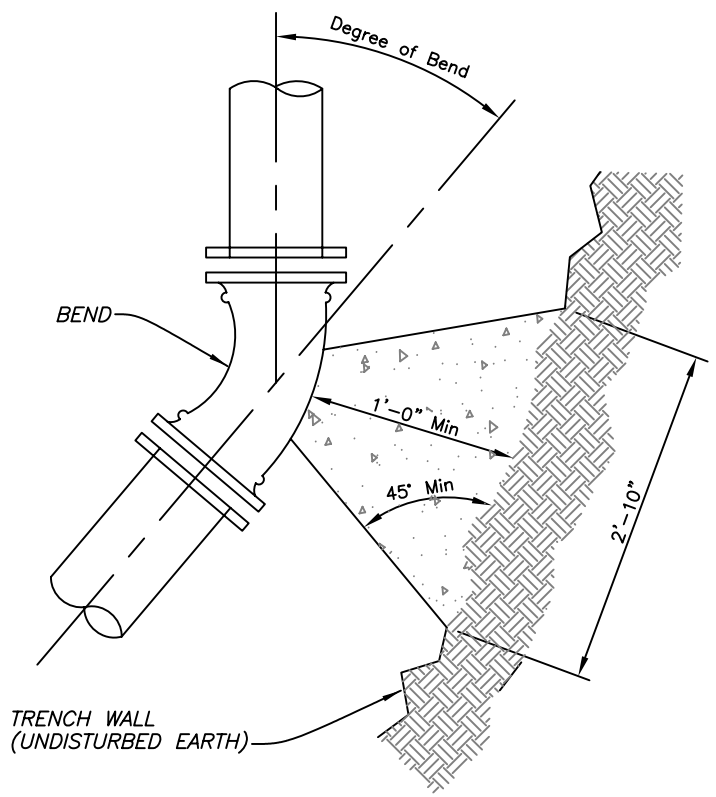

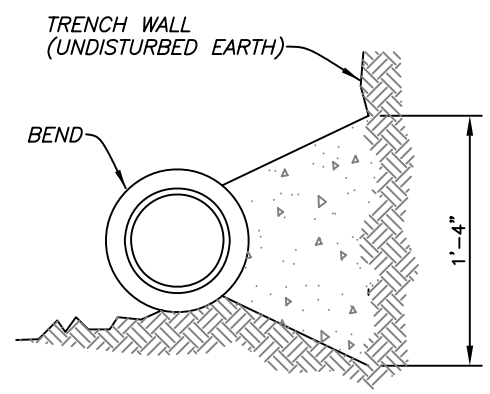

NOTES:

1. *Concrete shall be kept at sufficient distance from joints for removal of all joint accessories including bolts.*
2. *All bearing surfaces are to be carried to undisturbed soil.*
3. *Poor soil (silty soils, clay, muck or peat) will require larger thrust blocks.*

THRUST BLOCK

Not To Scale

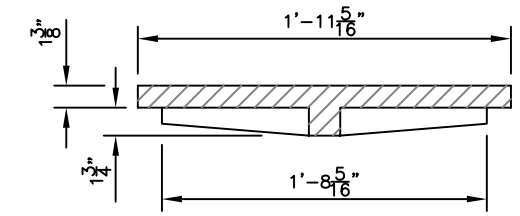

COVER SECTION

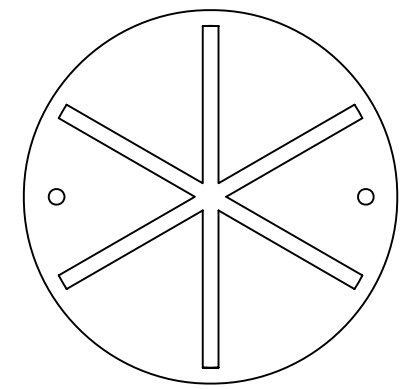

COVER BACK

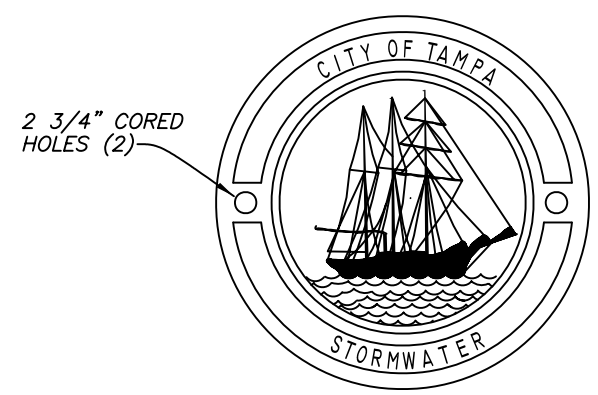

COVER FACE

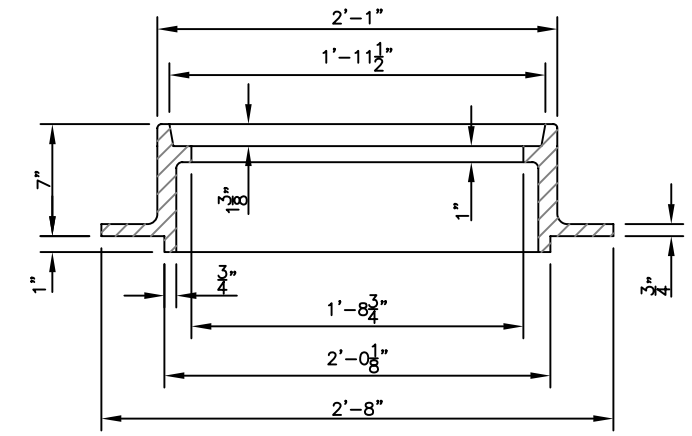

STANDARD FRAME SECTION

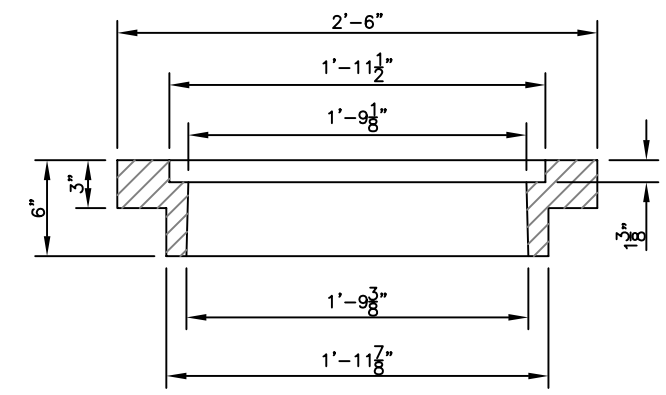

INVERTED FRAME SECTION

MANHOLE FRAMES & COVER

Not To Scale

NOTE:
Manhole structures shall be per FDOT Standard Index #200.

1/2"

stormwater idetails/ misc details

No.	DATE	REVISIONS	No.	DATE	REVISIONS
3			6		
2			5		
1			4		

DES: Storm
DRN: Storm
CKD:
DATE: 7/03

CITY of TAMPA
STORMWATER DEPARTMENT

MISCELLANEOUS DETAILS

W.O.

SHEET 28 OF 30

Notes:

1. *All types of pipe bedding shall extend to undisturbed earth at sides and bottom of the trench.*
2. *Sand and crushed stone pipe bedding shall be placed and compacted in accordance with specifications.*
3. *Bedding materials shall meet project specifications for Class B and Class C Bedding.*
4. *Filter fabric shall meet FDOT Standard Specification 441–2.3.*

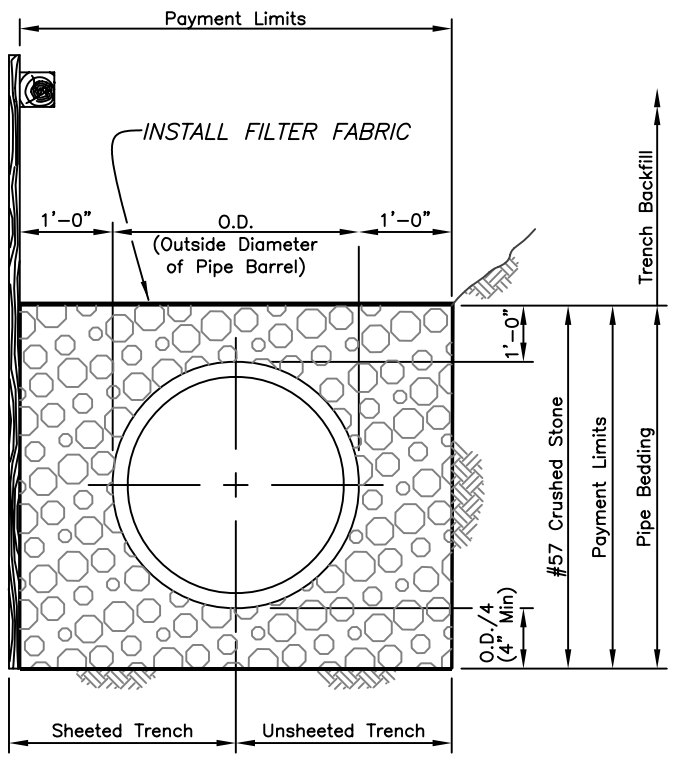

CLASS B-I BEDDING

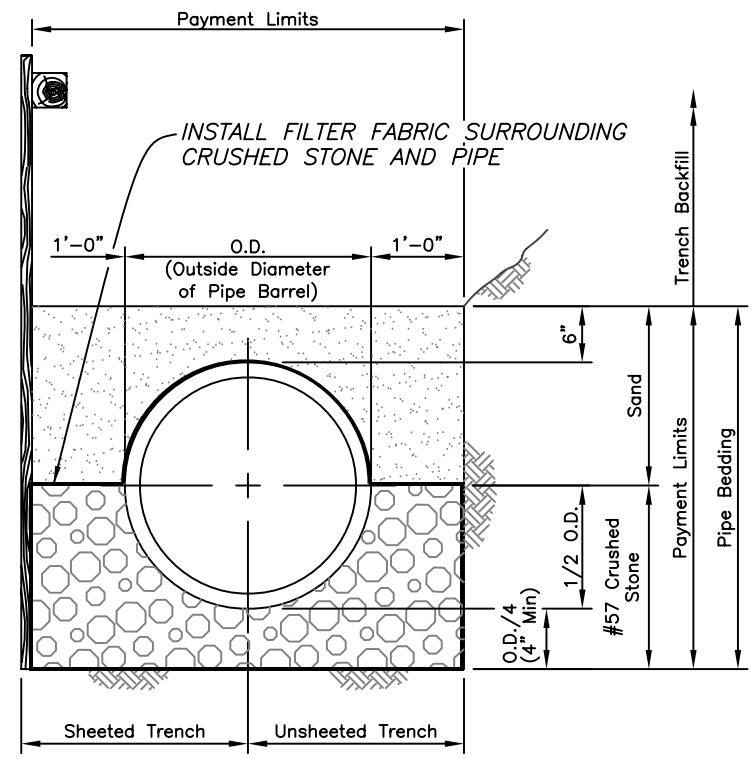

CLASS B BEDDING

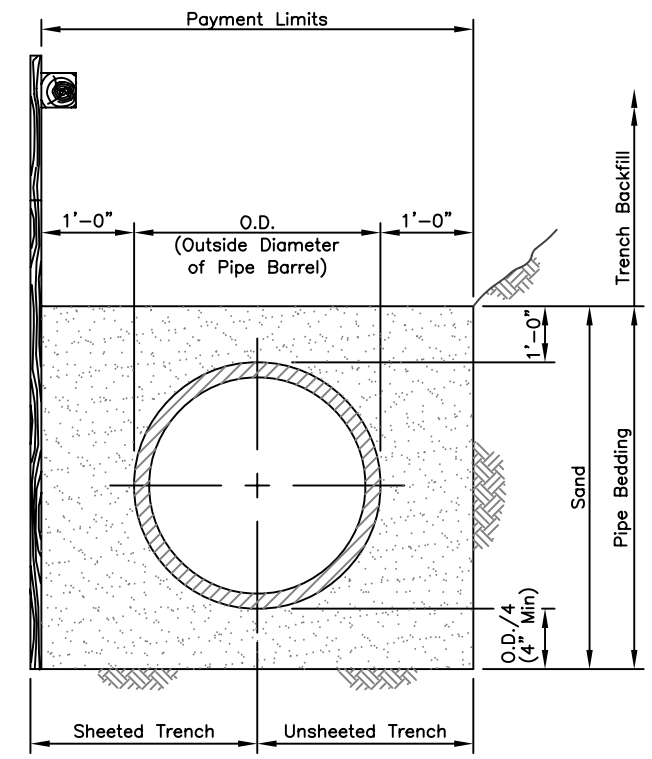

CLASS C BEDDING

Misc. Details

No.	DATE	REVISIONS	No.	DATE	REVISIONS
3			6		
2			5		
1	12/09/04	NEW SHEET	4		

DES: STORM
DRN: STORM
CKD:
DATE:

CITY of TAMPA
STORMWATER DEPARTMENT

BEDDING DETAILS

W.O.

SHEET 29 OF 30

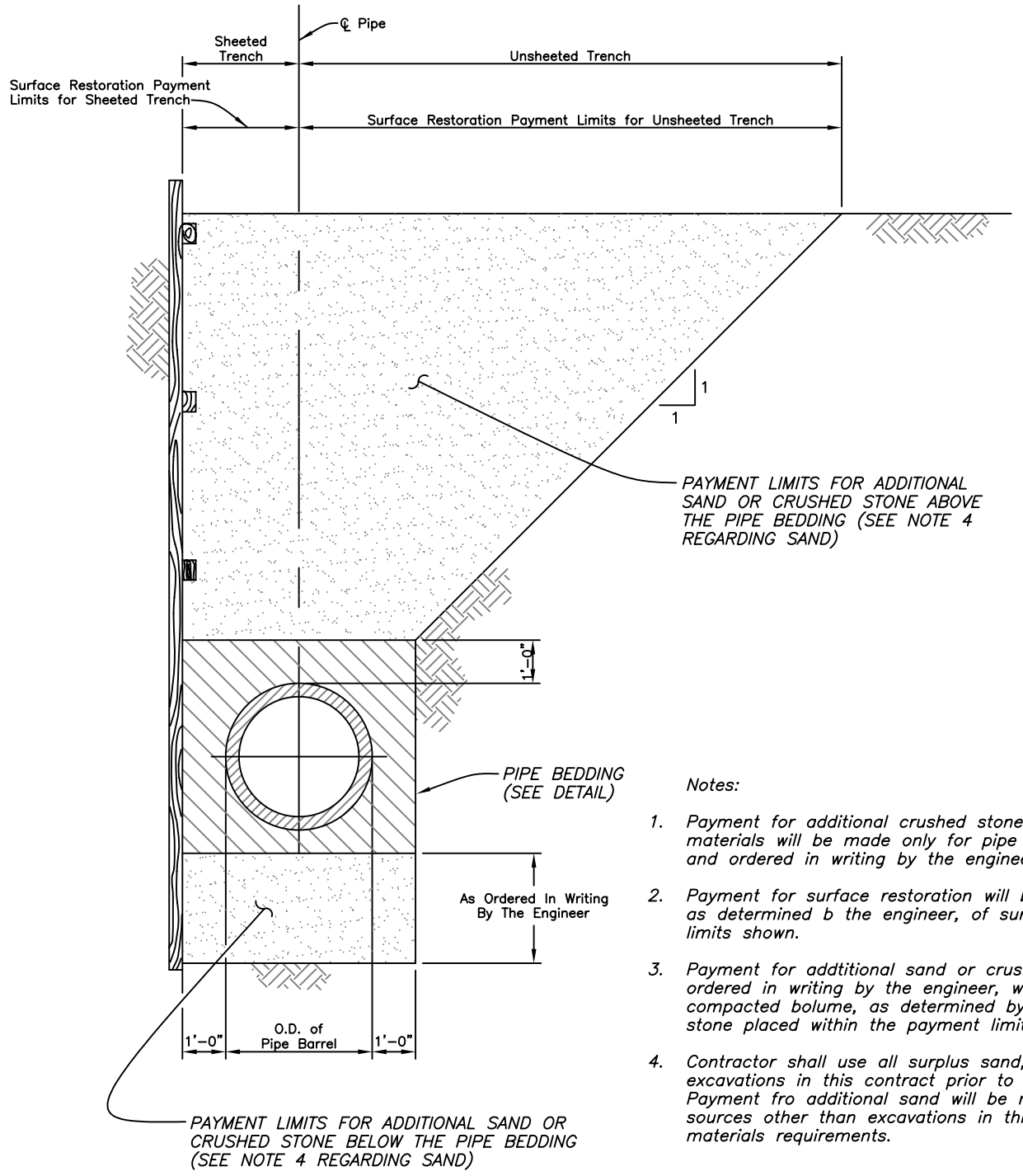

Notes:

1. Payment for additional crushed stone of Class D concrete pipe bedding materials will be made only for pipe bedding not shown in the plans and ordered in writing by the engineer.
2. Payment for surface restoration will be made for the actual quantities, as determined b the engineer, of surface restored within the payment limits shown.
3. Payment for addtitional sand or crushed stone fro trench stabilization, ordered in writing by the engineer, will be made for the actual compacted bolume, as determined by the engineer, of sand or crushed stone placed within the payment limits shown,
4. Contractor shall use all surplus sand, approved as suitable, from excavations in this contract prior to suppling sand from other sources. Payment fro additional sand will be made only for sand supplied from sources other than excavations in this contract. See specifications for materials requirements.

PAYMENT LIMITS FOR SURFACE RESTORATION AND ADDITIONAL SAND OR CRUSHED STONE FOR TRENCH STABILIZATION

Not To Scale

QUANTITIES FOR PAYMENT FOR ADDITIONAL PIPE BEDDING MATERIALS ORDERED IN WRITING BY THE ENGINEER											
NOMINAL INSIDE DIAMETER (INCHES)	15	18	24	30	36	42	48	54	60	66	72
CUBIC YARDS OF CONCRETE PER LINEAR FOOT OF PIPE IN CONCRERE ENCASEMENT	0.258	0.299	0.383	0.472	0.588	0.690	0.797	0.909	1.027	1.150	1.279
CUBIC YARDS OF CONCRETE PER LINEAR FOOT OF PIPE IN CLASS A BEDDING (CONCRETE CRADLE)	0.128	0.150	0.192	0.236	0.294	0.345	0.399	0.455	0.514	0.514	0.640
CUBIC YARDS OF CRUSHED STONE PER LINEAR FOOT OF PIPE IN CLASS B-1 BEDDING	0.304	0.362	0.479	0.608	0.781	0.936	1.103	1.281	1.471	1.673	1.887
CUBIC YARDS OF CRUSHED STONE PER LINEAR FOOT OF PIPE IN CLASS B BEDDING	0.111	0.143	0.207	0.280	0.381	0.475	0.578	0.590	0.810	0.939	1.078

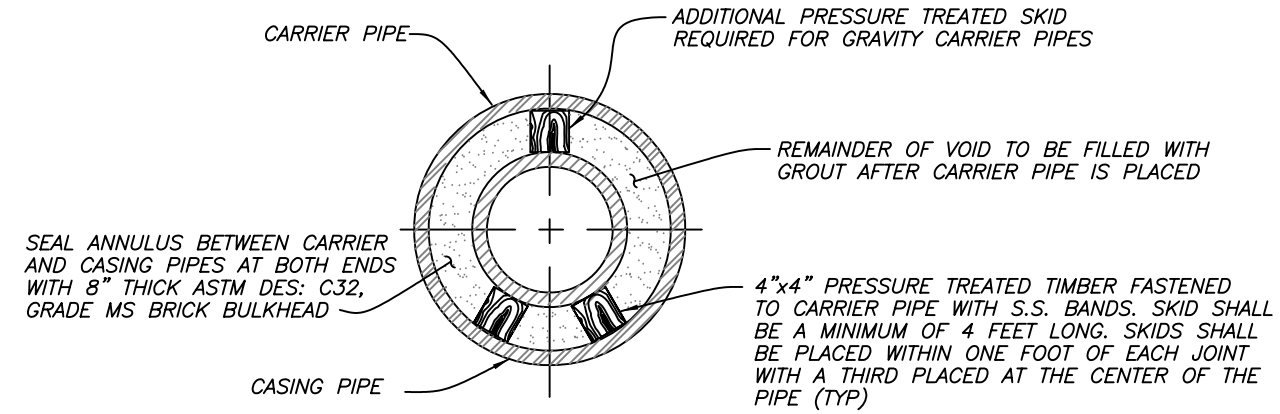

Notes:

1. Stainless steel casing spacers as manufactured by Cascade or equal may be used rather than a timber skid system.
2. All casing ipes shall be welded steel pipe conforming to ASTM DES A139 Grade B or ASTMDES A53 Grade B, having a minimum inside diameter as indicated on plans. The minimum wall thickness shall be 3/8" or thicker if so indicated on the plan and profile drawings.

CORRESPONDING CARRIER AND CASING PIPE SIZES											
NOMINAL INSIDE DIAMETER OF CARRIER PIPE (INCHES)	15	18	24	30	36	42	48	54	60	66	72
MINIMUM INSIDE DIAMETER OF CASING PIPE (INCHES)	30	36	48	60	60	66	78	84	90	96	102

DETAIL OF JACKED CROSSINGS

Not To Scale

No.	DATE	REVISIONS	No.	DATE	REVISIONS
3			6		
2			5		
1	12/09/04	NEW SHEET	4		

DES: STORM
DRN: STORM
CKD:
DATE:

CITY of TAMPA
STORMWATER DEPARTMENT

PAYMENT LIMITS & JACKED CROSSINGS

W.O.
SHEET 30 OF 30

Misc. Details

40