The Enclosed Document Is Provided For Your Convenience.

Please Email ALL Questions:

MailTo:ContractAdministration@TampaGov.net

Please Let Us Know If You Plan To Bid

City of Tampa
Contract Administration Department
306 E. Jackson St. #280A4N
Tampa, FL 33602
(813)274-8456

CITY of TAMPA

INDEX OF SHEETS

SHEET NO.	DESCRIPTION
1	COVER
2	MISCELLANEOUS FORCE MAIN DETAILS 1 of 2
3	MISCELLANEOUS FORCE MAIN DETAILS 2 of 2
4	CLEANOUT COVER DETAILS
5	JACK AND BORE DETAILS
6	LATERAL CONNECTIONS (NEW)
7	STANDARD DETAILS, MISC. GRAVITY
8	DOGHOUSE MANHOLE DETAILS
9	FIBERGLASS REINFORCED POLYESTER MANHOLE DETAILS
10	STANDARD MANHOLE 8 to 24

WASTEWATER DEPARTMENT

STANDARD DETAILS FOR

WASTEWATER COLLECTION SYSTEM REPAIR - FY2017

CONTRACT
No. 17-C-00001

JACINTO CARLOS FERRAS, P.E. #49454
DESIGN DIVISION HEAD
WASTEWATER DEPARTMENT

No.	DATE	REVISIONS
3		
2		
1		

DES: DR
DRN: BL
CKD:
DATE:

CITY of TAMPA
WASTEWATER DEPARTMENT

STANDARD DETAILS
COVER

W.O. ----

User: sse8 Drawing Name: K:\WW_Projects\2014\2014_Wastewater Collection System Repair FY2014\Dwg\Wastewater Collection System repair FY2014.dwg
Layout: Cover Plotted: 8/30/2016 1:18:47 PM CTB: WW-TOSHIBA.CTB Default LW: 25mm

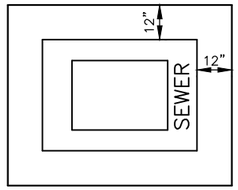

PLAN VIEW

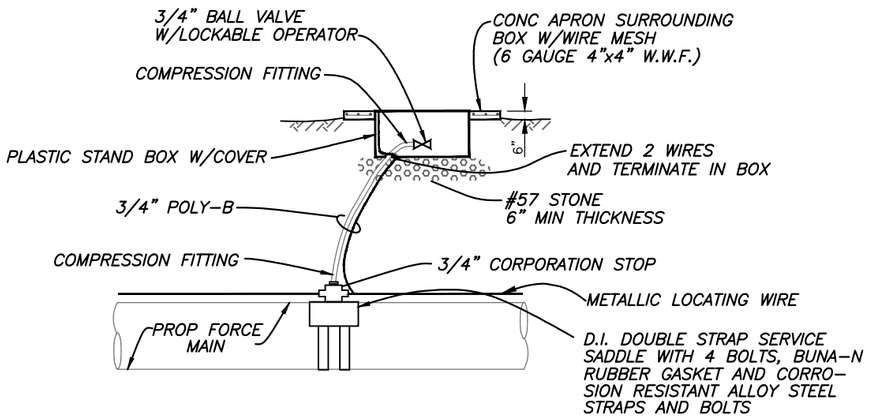

AIR RELEASE VALVE DETAIL
Not To Scale

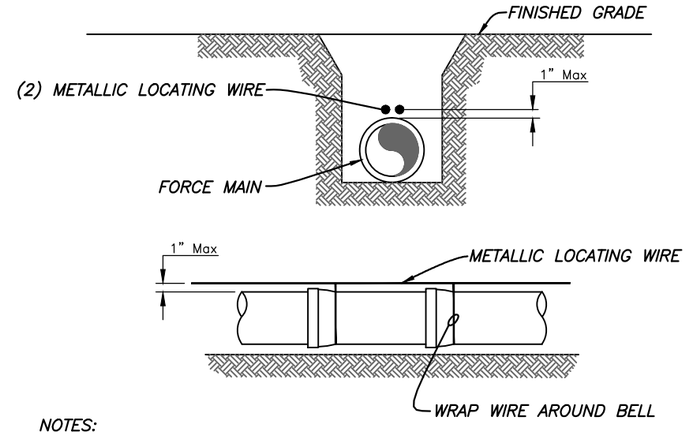

NOTES:

1. Pipe shall require 2 green insulated metallic locating wires capable of detection by a cable locator and shall be buried directly above the centerline of the pipe. Use duct tape as necessary to hold wire directly on top of pipe.
2. Direct bury pipe shall have (2) 12 gauge insulated solid copper wires. Directional drilled pipe shall have (2) 8 gauge insulated solid copper wires or (2) 10 gauge insulated copper clad steel wires. For directional drilled HDPE pipe a 1" conduit may be pulled back with the locating wires to ease installation and to prevent the wires from breaking.
3. Wire insulation must be suitable for buried service. HDPE or HMWPE are acceptable insulation materials. Nylon insulation is not acceptable.
4. Wires must be spliced together with wire connectors suitable for buried service. Connectors shall be corrosion and moisture proof such as DBR Kit by 3M, Snakebite by Copperhead Industries or equal. Twisting the wires and sealing with electrical tape alone is not acceptable.
5. All tracer wires must pass a continuity test in the presence of a City inspector. No pipe will be accepted by the City until a continuity test passes.
6. Locating wire shall terminate at the top of each valve box and air release valve. Wire shall be capable of extending 24" above top of box in such a manner so as not to interfere with valve operation.

PIPE LOCATING WIRE DETAIL
Not To Scale

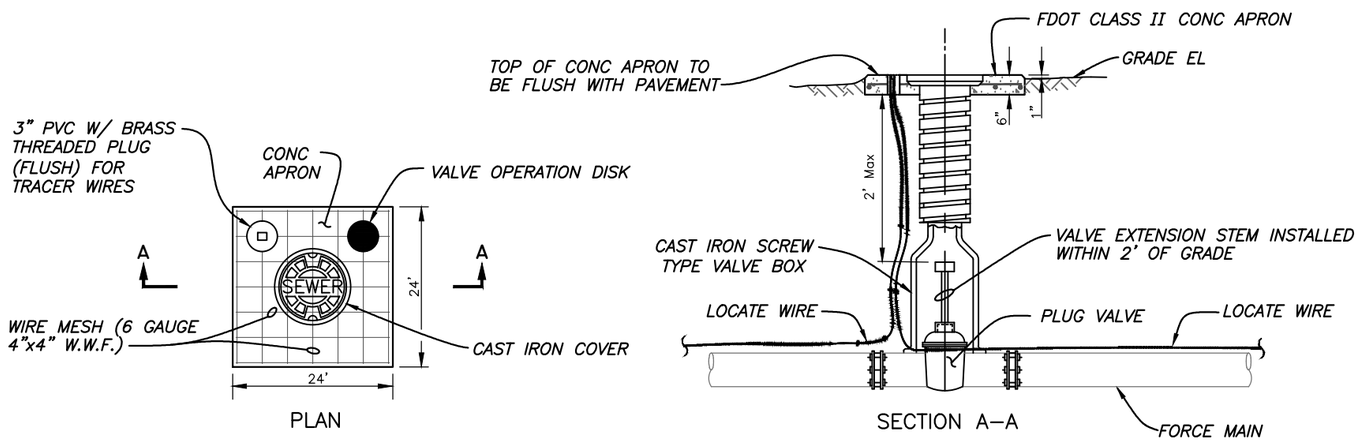

VALVE BOX DETAIL
Not To Scale

IMPORTANT - FOR EACH OPERABLE VALVE:

PROVIDE A BRASS IDENTIFICATION TAG ANCHORED TO THE CONCRETE APRON THAT IS A MINIMUM 2" IN DIAMETER AND 1/8-INCH THICK. THE TAG SHALL BE ENGRAVED WITH "SEWER", SIZE OF VALVE, TYPE OF VALVE, AND DIRECTION AND NUMBER OF TURNS TO OPEN.

FOR EXAMPLE, A 4-INCH PLUG VALVE ON A WASTEWATER FORCE MAIN THAT REQUIRES 1/4 TURNS TO THE LEFT(COUNTERCLOCKWISE) TO BE FULLY OPEN WOULD REQUIRE THE FOLLOWING ON AN IDENTIFICATION TAG:

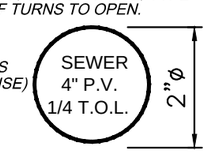

VALVE OPERATION DISK
Not To Scale

	No.	DATE	REVISIONS				
JACINTO CARLOS FERRAS, P.E. #49454 DESIGN DIVISION HEAD WASTEWATER DEPARTMENT	3			DES: DR DRN: BL CKD: DATE:	CITY of TAMPA WASTEWATER DEPARTMENT	STANDARD DETAILS MISC. FM DETAILS 1 OF 2	W.O. ---- SHEET 2 OF 10
	2						
	1						

User: sse8 Drawing Name: K:\WW_Projects\2014\2014_Wastewater Collection System Repair FY2014\Dwg\Wastewater Collection System repair FY2014.dwg
Layout: Misc. FM Details 1 of 2 Plotted: 8/30/2016 1:18:52 PM CTB: WW-TOSHIBA.CTB Default LW: 25mm

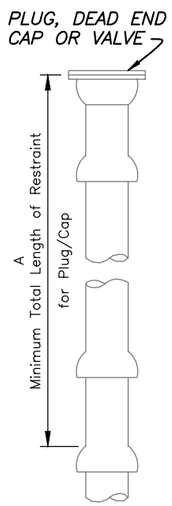

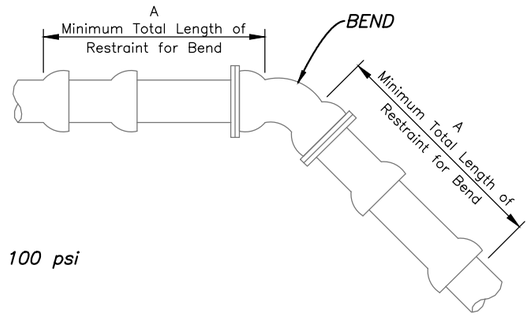

NOTES:

1. These tables are based on:
   a. Maximum test pressure of 100 psi
   b. Class "C" pipe bedding
   c. Poor soil conditions
   d. PVC pipe
   e. For vertical offsets, shallower vertical fitting has a minimum cover of 3 feet.
2. Restraining devices for PVC pipe shall be by Megalug (Series 2000 PV) or equal, meeting ASTM F1674.
3. Any additional fittings within the restrained section shall be restrained accordingly.
4. One standard length of PVC pipe (20 feet) shall be laid on either side of the fitting where possible.

HORIZONTAL OFFSET:

RESTRAIN "A" (LF) *

FITTING TYPE	4"	6"	8"	10"	12"	16"	18"	20"	24"
11-1/4°	1*	2*	2*	2*	3*	3*	3*	4*	4*
22-1/2°	2*	3*	3*	4*	5*	6*	6*	7*	8*
45°	4*	5*	7*	8*	9*	11*	13*	14*	16*
90°	9*	12*	15*	18*	21	27	29	32	37
PLUG / CAP / ISOLATION VALVE	26	36	47	56	66	85	94	102	119

A = MINIMUM FOOTAGE OF PIPE TO BE RESTRAINED

* MINIMUM ONE PIPE JOINT UPSTREAM AND DOWNSTREAM OF EACH FITTING SHALL BE RESTRAINED

VERTICAL OFFSET:

RESTRAIN "A" (LF) *

FITTING TYPE	4"	6"	8"	10"	12"	16"	18"	20"	24"
11-1/4°	3*	4*	5*	6*	7*	9*	10*	11*	12*
22-1/2°	5*	8*	10*	12*	14*	17*	19*	21	24
45°	11*	15*	20	23	28	35	39	43	50

A = MINIMUM FOOTAGE OF PIPE TO BE RESTRAINED

* MINIMUM ONE PIPE JOINT UPSTREAM AND DOWNSTREAM OF EACH FITTING SHALL BE RESTRAINED

FITTING RESTRAINT DETAIL

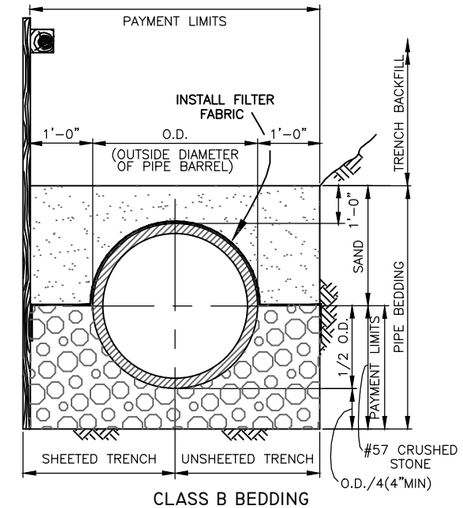

CLASS B BEDDING
(ONLY ALLOWED WITH CITY INSPECTOR APPROVAL)

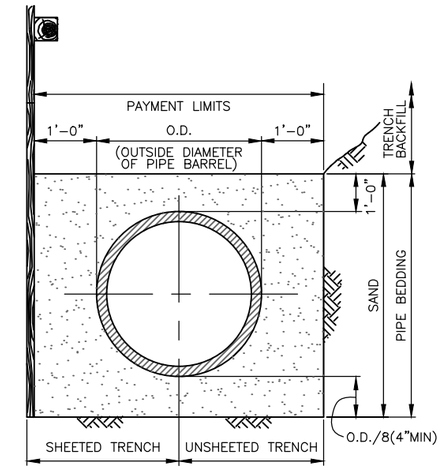

CLASS C BEDDING

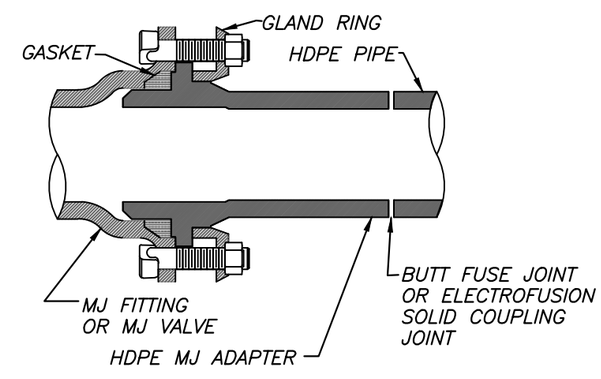

NOTE:
Schematic shown for standard MJ fitting and plug valves.

HDPE TRANSITION DETAIL
Not To Scale

	No.	DATE	REVISIONS			
JACINTO CARLOS FERRAS, P.E. #49454 DESIGN DIVISION HEAD WASTEWATER DEPARTMENT	3			DES: DR DRN: BL CKD: DATE:	CITY of TAMPA WASTEWATER DEPARTMENT	STANDARD DETAILS MISC. FM DETAILS 2 OF 2
	2					
	1					

W.O. ----
SHEET 3 OF 10

User: sse8 Drawing Name: K:\WW_Projects\2014\2014_Wastewater Collection System Repair FY2014\Dwg\Wastewater Collection System Repair FY2014.dwg
Layout: Misc. FM Details 2 of 2 Plotted: 8/30/2016 1:18:57 PM CTB: WW-TOSHIBA.CTB Default LW: 25mm

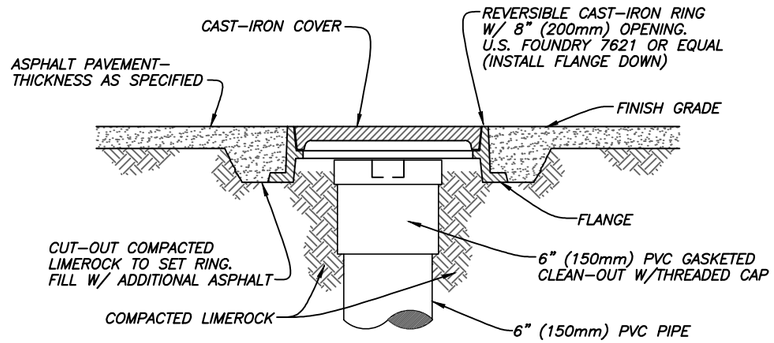

CLEAN-OUT W/ COVER FOR ASPHALT PAVED AREAS

Not to Scale

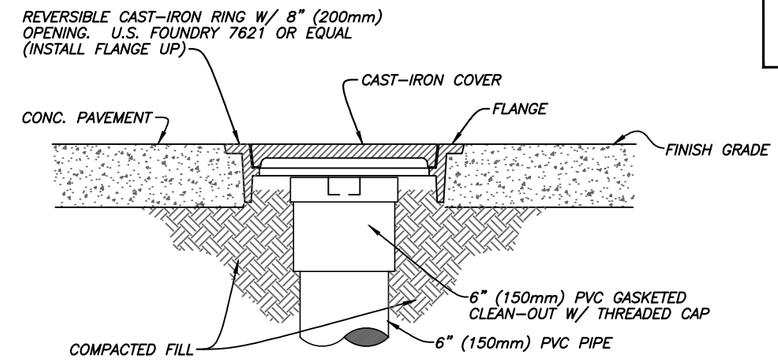

CLEAN-OUT W/ COVER FOR CONCRETE PAVED AREAS

Not to Scale

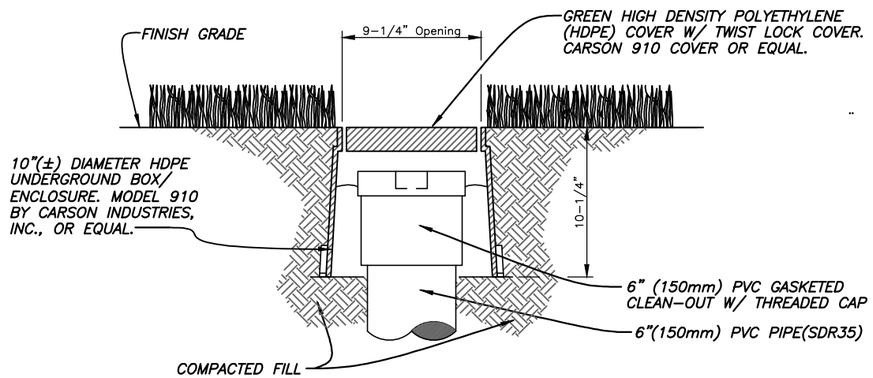

CLEAN-OUT W/ COVER FOR GRASS (NON-VEHICULAR TRAFFIC) AREAS

Not to Scale

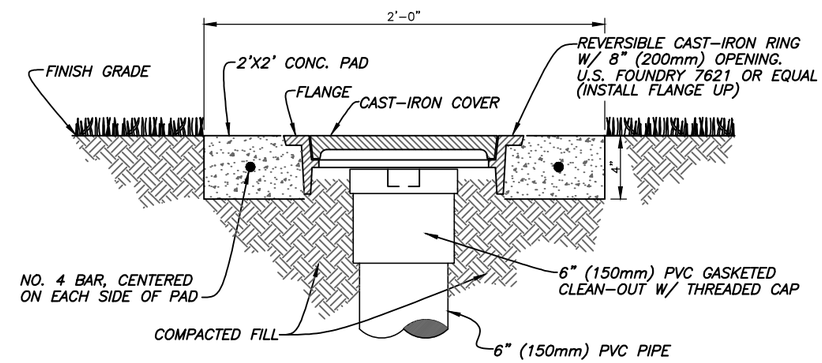

CLEAN-OUT W/COVER FOR GRASSED AREAS W/VEHICULAR TRAFFIC

Not to Scale

NOTES:

1. Contractor shall adjust the clean-out and cast iron ring and cover or HDPE box and cover so that the cover is seated securely and the top of the cover is flush with the finish grade. The PVC cap of the clean-out shall be no more than 4 inches deeper than the finish grade.
2. PVC cap may be provided with recessed nut.
3. Cast iron cover shall be provided with an embossed letter "S" for identification, HDPE cover shall be marked "SEWER" for identification.
4. Cast iron ring and cover, or HDPE box and cover, as well as the four (4 sf) square feet of material (concrete or asphalt around the clean-out), are part of the clean out installation and cost shall be included within the unit price for clean-out with no additional payment.
5. All clean-outs on this project shall be one of the four types shown on this sheet. Field conditions will determine which type.

CLEANOUT COVER DETAILS

Not to Scale

	No.	DATE	REVISIONS				
JACINTO CARLOS FERRAS, P.E. #49454 DESIGN DIVISION HEAD WASTEWATER DEPARTMENT	3			DES: DR DRN: BL CKD: DATE:	CITY of TAMPA WASTEWATER DEPARTMENT	STANDARD DETAILS CLEANOUT COVER DETAILS	W.O. ---- SHEET 4 OF 10
	2						
	1						

Uses: sse8 Drawing Name: K:\WW_Projects\2014\2014_Wastewater Collection System Repair FY2014\Dwg\Wastewater Collection System repair FY2014.dwg
Layout: Cleanout Cover Details Plotted: 8/30/2016 1:19:01 PM CTB: WW-TOSHIBA.CTB Default LW: 25mm

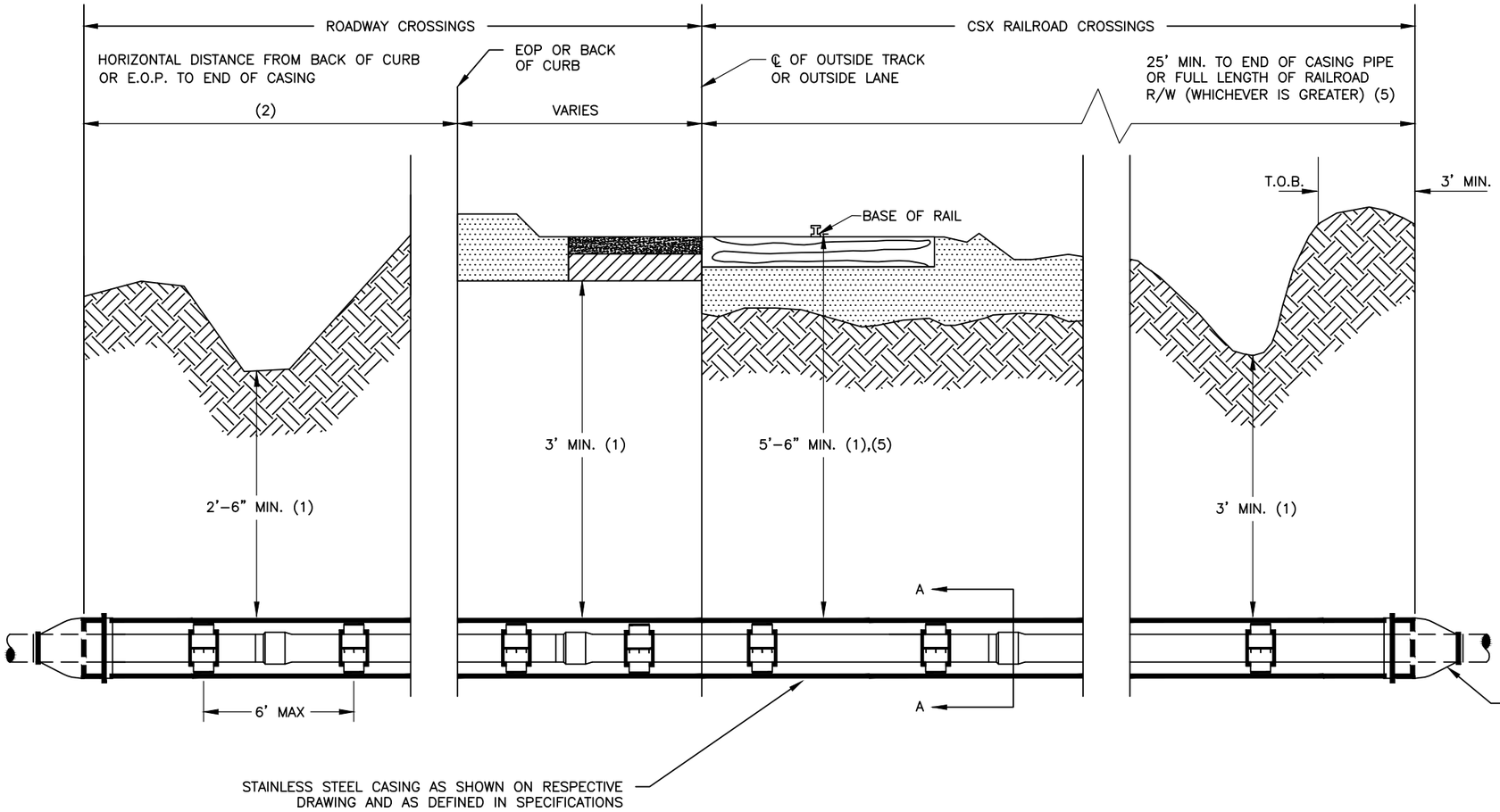

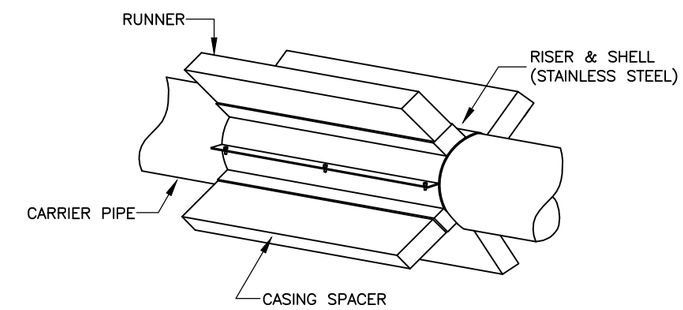

(CASCADE WATERWORKS MFG. CO.; ADVANCE PRODUCTS & SYSTEM, INC. OR APPROVED EQUAL).

NOTES:

1. VERTICAL DIMENSIONS TYPICAL FOR CASINGS
2. EXTEND 5' BEYOND CURB OR E.O.P. UNLESS ADDITIONAL DISTANCE IS REQUIRED BY ANOTHER AGENCY HAVING JURISDICTION OVER THE RIGHT OF WAY WHERE THE PIPELINE IS INSTALLED.
3. CASING PIPE SHALL CONFORM TO THE REQUIREMENTS OF AWWA C-200 AND ASTMA-139, GRADE B.
4. CASING PIPE SHALL BE SLOPED TO ONE END.
5. SEE CSX'S DESIGN & CONSTRUCTION STANDARD SPECIFICATIONS FOR PIPELINE OCCUPANCIES FOR MORE DETAILS AND REQUIREMENTS

CORRESPONDING CARRIER AND CASING PIPE SIZES

NOMINAL INSIDE DIAMETER OF CARRIER PIPE (INCHES)	4	6	8	10	12	14	15	16	18	20	21	24	27
MINIMUM INSIDE DIAMETER OF CASING PIPE (INCHES)	12	18	20	24	30	30	30	30	36	36	36	48	48
MIN. CASING THICKNESS CITY, COUNTY & FDOT	3/8"											1/2"	
MIN. CASING THICKNESS RAILROADS (5)	3/8"				1/2"				9/16"			3/4"	

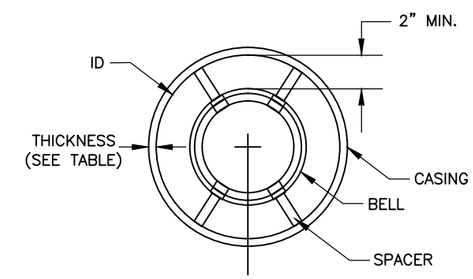

SECTION A-A

CARRIER PIPE TO BE INSTALLED NEAR THE CENTER OF THE CASING PIPE. CASING SPACERS SHALL BE SIZED SO THAT CARRIER PIPE IS COMPLETELY SUPPORTED ON ALL SIDES AND CANNOT MOVE.

JACK & BORE DETAILS

Not to Scale

No.	DATE	REVISIONS
3		
2		
1		

JACINTO CARLOS FERRAS, P.E. #49454
DESIGN DIVISION HEAD
WASTEWATER DEPARTMENT

DES: DR
DRN: BL
CKD:
DATE:

CITY of TAMPA
WASTEWATER DEPARTMENT

STANDARD DETAILS
JACK & BORE DETAILS

W.O. ----
SHEET 5 OF 10

User: sse8 Drawing Name: K:\WW_Projects\2014\2014_Wastewater Collection System Repair FY2014\Dwg\Wastewater Collection System repair FY2014.dwg
Layout: Jack & Bore Details Plotted: 8/30/2016 1:19:06 PM CTB: WW-TOSHIBA.CTB Default LW: 25mm

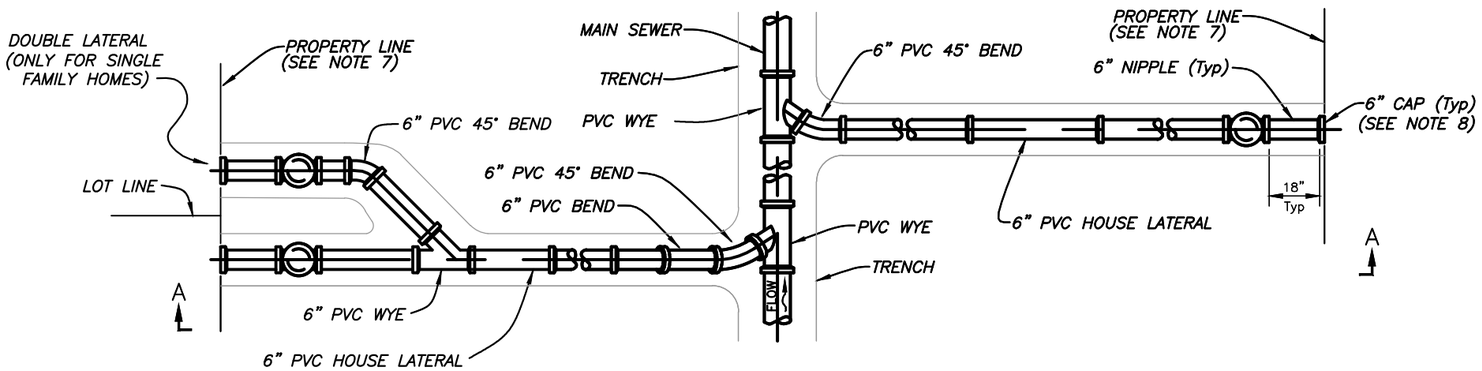

PLAN

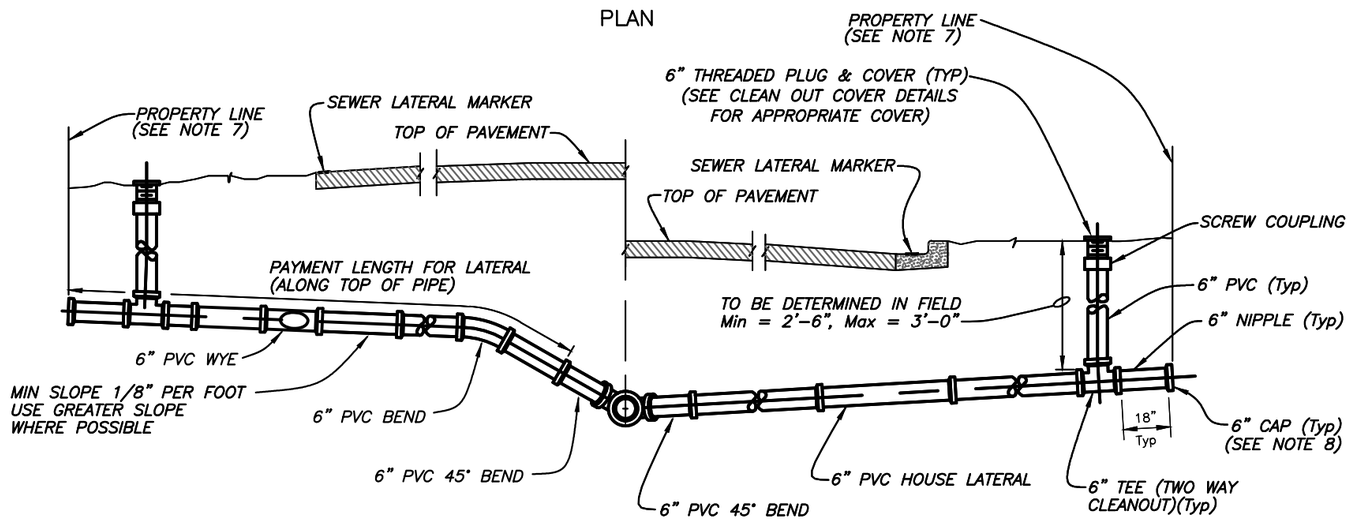

SECTION A–A

TYPE A HOUSE LATERAL DETAIL
Not to Scale

NOTES:

1. The locations of house laterals by symbols on plans are approximate only and the actual location and slopes will be determined in the field by the contractor with the approval of the engineer.

2. The minimum diameter of all house laterals shall be 6 inches.

3. The vertical alignment of the service lateral shall be designed so that no more than two (2) vertical bends are required between the connection to the gravity main and the property line.

4. House laterals which pass under drainage ditches with less than 18" of cover or which have less than 30" of cover under pavement shall be Pressure Class 350 with 40 mils (MDFT) of Protecto 401 interior coating per specifications.

5. A minimum vertical clearance of 12–inches shall be provided when crossing above a water main. However, a vertical clearance less than 12–inches but greater than 6–inches will be allowed if the lateral is installed using one the following criteria:

   - The lateral is constructed of ductile iron pipe with a minimum pressure class of 350 with 40 mils (MDFT) of Protecto 401 interior coating.
   - The lateral is encased in at least 4–inches of concrete.
   - The lateral is installed in a casing pipe with an impact strength equal to the impact strength of pressure class 350 ductile iron.

   A minimum of 6–inches of vertical clearance shall be provided when crossing below water mains with a diameter 6–inches or less. A minimum of 12–inches of clearance shall be provided when crossing below a water main with a diameter greater than 6–inches up to a diameter of 18–inches. A minimum of 18–inches of vertical clearance will be required when crossing under a water main with diameters greater than 18–inches.

   At all water main crossings, joints of the lateral pipe at the crossing shall be arranged so that no joint is within 6–ft of a joint along the water main. If the joint spacing can not be achieved, then the gravity sewer at the crossing shall be constructed of C–900 PVC.

   A minimum vertical clearance of 6–inches shall be provided when crossing above all utilities other than a water main. A minimum of 6–inches of vertical clearance shall be provided when crossing below a utility with a diameter 6–inches or less. A minimum of 12–inches of clearance shall be provided when crossing below a utility with a diameter greater than 6–inches up to a diameter of 18–inches. A minimum of 18–inches of vertical clearance will be required when crossing under utilities with diameters greater than 18–inches.

6. Transitions from SDR 35 PVC to either C900 or ductile iron pipes shall be made with PVC rigid adaptors. Transitions from SDR 35 PVC to either existing clay or concrete pipes shall be made with a Fernco 1000 series flexible coupling with stainless steel shear ring or approved equal.

7. In sub–divisions where the Developer has provided a recorded utility easement (typically 10') beyond the property line, the clean out shall be installed within the easement away from the sidewalk.

8. At the direction of the City's inspector, the contractor shall temporarily stake the cap of all laterals at the property line with a 2"x4" treated wood stake.

9. Double laterals are only allowed for single family homes on single lots.

	No.	DATE	REVISIONS				
JACINTO CARLOS FERRAS, P.E. #49454 DESIGN DIVISION HEAD WASTEWATER DEPARTMENT	3			DES: DR DRN: BL CKD: DATE:	CITY of TAMPA WASTEWATER DEPARTMENT	STANDARD DETAILS NEW LATERAL CONNECTIONS	W.O. ---- SHEET 6 OF 10
	2						
	1						

User: sse8 Drawing Name: K:\WW_Projects\2014\2014_Wastewater Collection System Repair FY2014\Dwg\Wastewater Collection System repair FY2014.dwg
Layout: New Lateral Connections Plotted: 8/30/2016 1:19:11 PM CTB: WW-TOSHIBA.CTB Default LW: 25mm

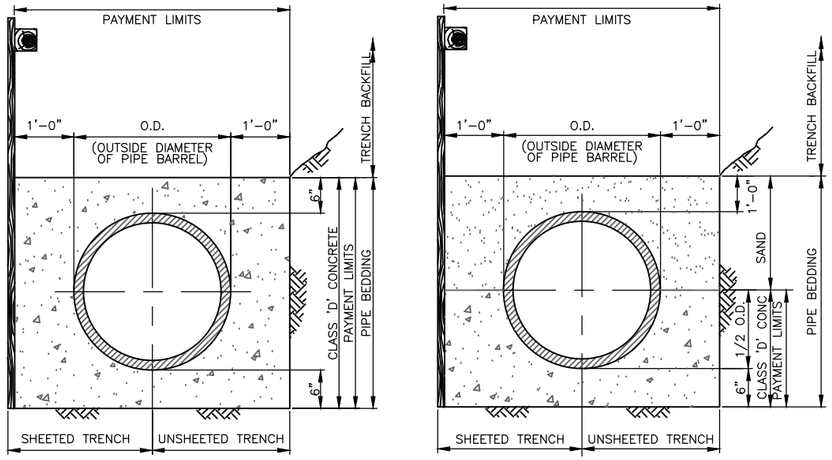

CONCRETE ENCASEMENT

CLASS A BEDDING (CONCRETE CRADLE)

NOTES:

1 ALL TYPES OF PIPE BEDDING SHALL EXTEND TO UNDISTURBED EARTH AT SIDES AND BOTTOM OF THE TRENCH.
2. SAND AND CRUSHED STONE PIPE BEDDING SHALL BE PLACED AND COMPACTED IN ACCORDANCE WITH SPECIFICATIONS.

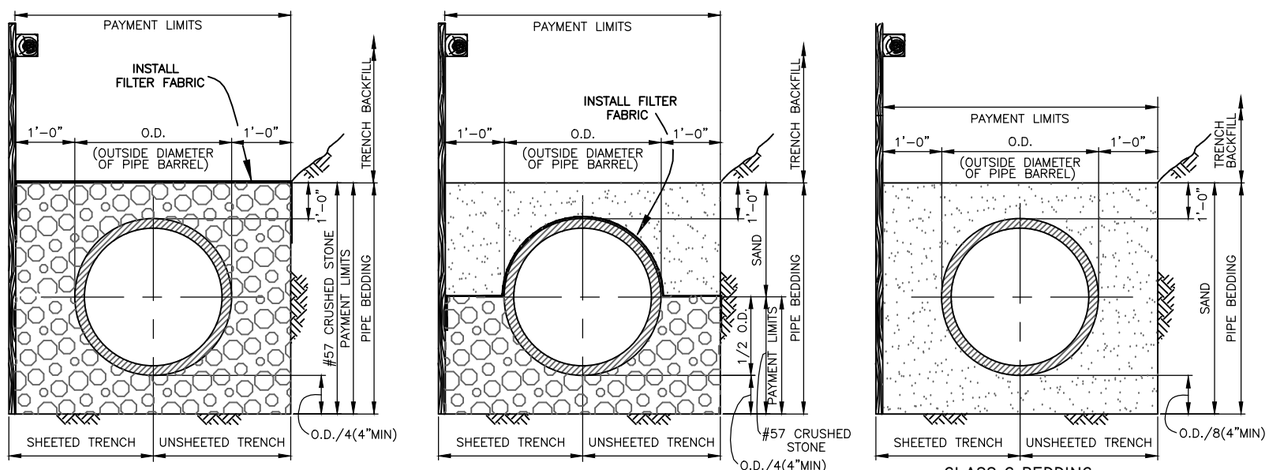

CLASS B-I BEDDING

CLASS B BEDDING
(ONLY ALLOWED WITH CITY INSPECTOR APPROVAL)

CLASS C BEDDING

PIPE BEDDING DETAILS
N.T.S.

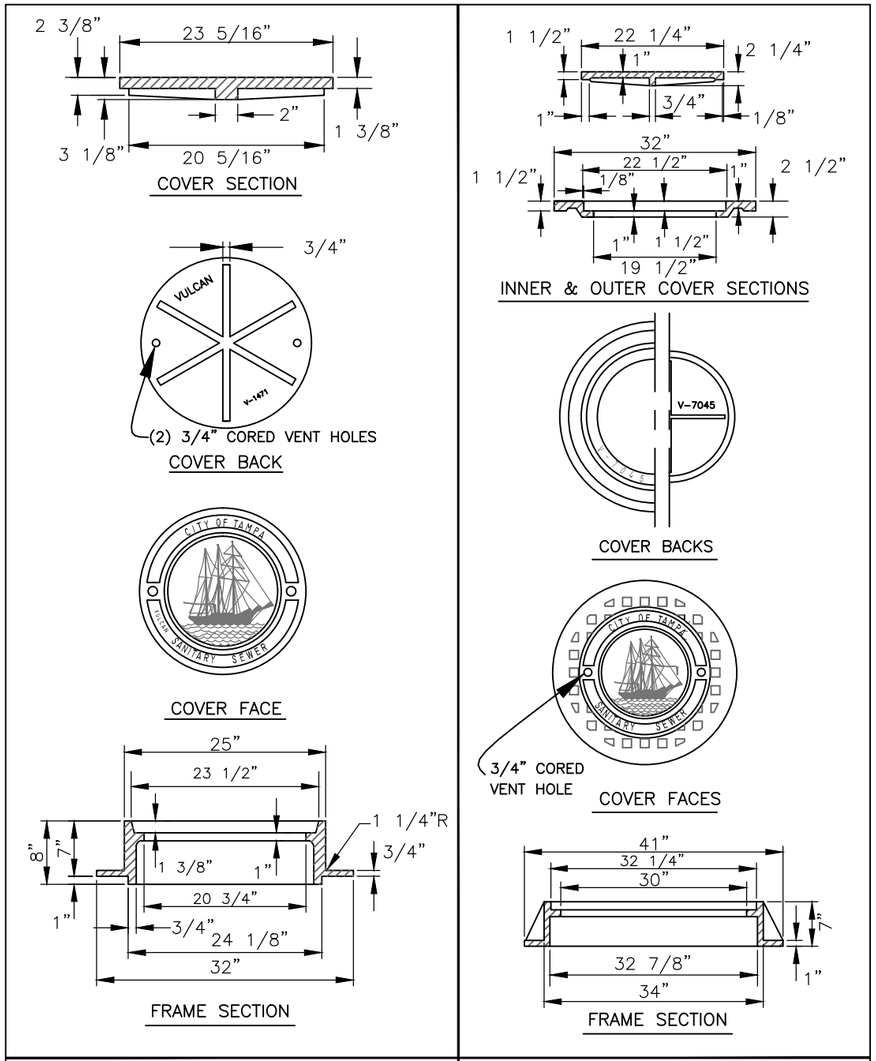

FOR MH'S OF SEWERS 24" OR LESS IN DIAMETER: VULCAN FOUNDRY NO. V-1471, U.S. FOUNDRY NO. 575-AT, OR EQUAL	FOR MH'S OF SEWERS 27" OR GREATER IN DIAMETER: VULCAN FOUNDRY NO. V-7045, U.S. FOUNDRY NO. 230-AB-M, OR EQUAL

HEAVY DUTY CAST IRON MANHOLE FRAME & COVER DETAILS
N.T.S.

JACINTO CARLOS FERRAS, P.E. #49454
DESIGN DIVISION HEAD
WASTEWATER DEPARTMENT

No.	DATE	REVISIONS
3		
2		
1		

DES: DR
DRN: BL
CKD:
DATE:

CITY of TAMPA
WASTEWATER DEPARTMENT

STANDARD DETAILS
MISC. GRAVITY DETAILS

W.O. ----
SHEET 7 OF 10

User: sse8 Drawing Name: K:\WW_Projects\2014\2014_Wastewater Collection System Repair FY2014\Dwg\Wastewater Collection System repair FY2014.dwg
Layout: Misc. Gravity Details Plotted: 8/30/2016 1:19:16 PM CTB: WW-TOSHIBA.CTB Default LW: 25mm

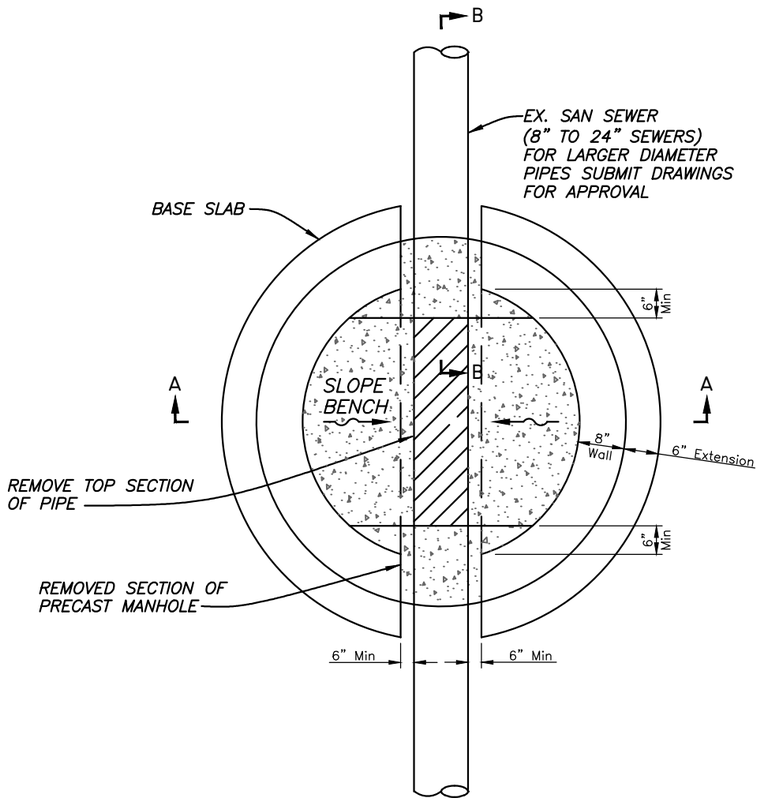

DOGHOUSE MANHOLE PLAN VIEW

Not to Scale

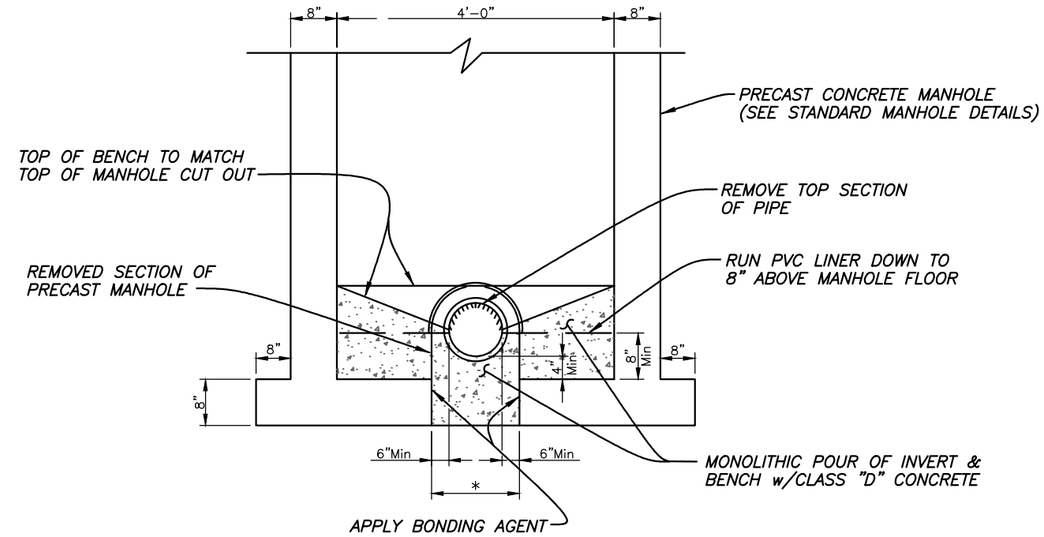

SECTION A-A

Not to Scale

* TYPICAL WIDTH OF OPENING IS 24" FOR AN EX. 8" PIPE

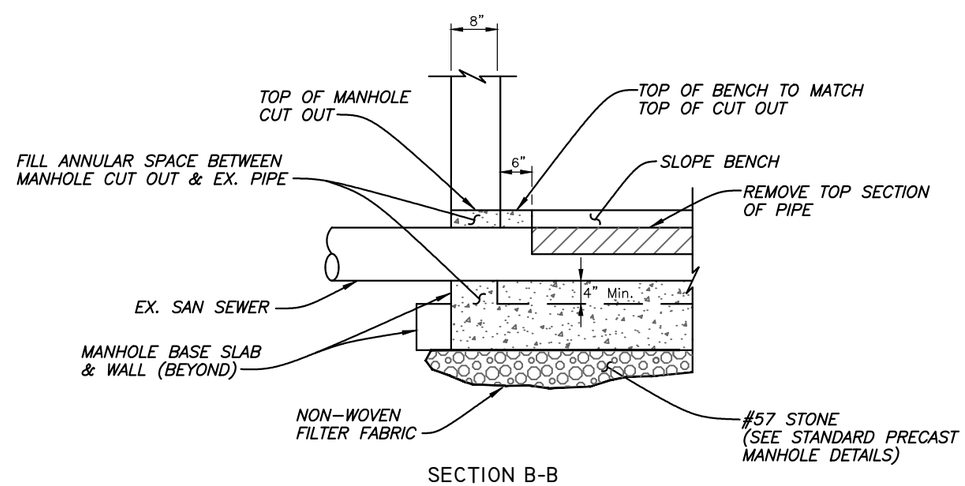

SECTION B-B

Not to Scale

	No.	DATE	REVISIONS				
JACINTO CARLOS FERRAS, P.E. #49454 DESIGN DIVISION HEAD WASTEWATER DEPARTMENT	3			DES: DR DRN: BL CKD: DATE:	CITY of TAMPA WASTEWATER DEPARTMENT	STANDARD DETAILS DOGHOUSE MANHOLE	W.O. ---- SHEET 8 OF 10
	2						
	1						

User: sse8 Drawing Name: K:\WW_Projects\2014\2014_Wastewater Collection System Repair FY2014\Dwg\Wastewater Collection System repair FY2014.dwg
Layout: Doghouse Manhole Plotted: 8/30/2016 1:19:21 PM CTB: WW-TOSHIBA.CTB Default LW: 25mm

NOTES

1. FIBERGLASS REINFORCED POLYESTER (FRP) MANHOLES SHALL CONFORM TO ASTM D–3753 LATEST EDITION.
2. THE MANHOLE BOTTOM SHALL BE INTEGRALLY JOINED TO THE BARREL SECTION AND SHALL BE A MINIMUM OF 1/2" THICK. TO ALLOW THE MANHOLE TO BE ANCHORED TO THE PRECAST BOTTOM SLAB, THE MANHOLE BOTTOM SHALL EXTEND 3 INCHES BEYOND THE OUTER EDGE OF THE BARREL.
3. FRP MANHOLES SHALL BE ANCHORED TO THE PRECAST CONCRETE BOTTOM SLAB WITH HILTI 316 STAINLESS STEEL KWIK BOLT II WEDGE ANCHORS OR APPROVED EQUAL. THE SIZE, NUMBER OF ANCHORS, EMBEDMENT DEPTH, ETC. SHALL BE AS INDICATED IN TABLE "A" AND SHALL BE BASED ON THE DEPTH OF THE MANHOLE. THE DEPTH OF THE MANHOLE SHALL BE MEASURED FROM THE RIM ELEVATION TO THE BOTTOM OF THE MANHOLE. THE ANCHORS SHALL BE INSTALLED A MINIMUM OF 1–1/2" FROM THE OUTER EDGE OF THE ANCHORING FLANGE AND SHALL BE EQUALLY SPACED AROUND THE CIRCUMFERENCE OF THE MANHOLE.
4. SEE SPECIFICATIONS FOR MATERIALS REQUIREMENTS AND PLACEMENTS AND COMPACTION OF PIPE AND STRUCTURE BEDDING.
5. ALL PIPE STUBS FROM MANHOLES FOR FUTURE CONNECTIONS OR OTHER CONTRACT DIVISIONS SHALL BE PROVIDED WITH WATERTIGHT PLUGS PLACED FROM WITHIN THE MANHOLE.

TECHNICAL DATA FOR HILTI 316 S.S. KWIK BOLT II

	ANCHOR BOLT SIZE		
	1/2"	5/8"	3/4"
MINIMUM PULL–OUT CAPACITY (LBS):	2130	2930	3870
MINIMUM EMBEDMENT DEPTH (IN):	3 1/2	4	4 3/4

* ABOVE DATA IS BASED ON 4000 PSI CONCRETE

TABLE "A"

MANHOLE DEPTH (FT)	ANCHOR SIZE (IN)	NUMBER OF ANCHORS
0 – 5	1/2	4
5 – 10	1/2	6
10 – 15	5/8	6
15 – 20	3/4	6
20 – 25	3/4	8

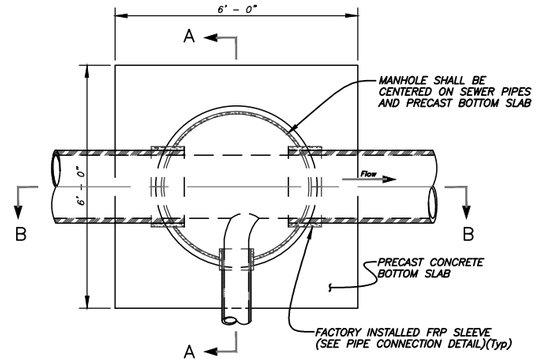

SECTIONAL PLAN

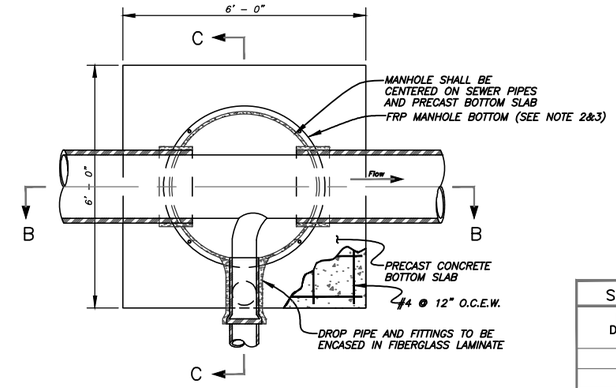

SECTIONAL PLAN
FRP DROP MANHOLE

SCHEDULE FOR DROP MANHOLE

INLET PIPE DIAMETER "D"	DROP PIPE DIAMETER "d"
8"	8"
10"	8"
12"	10"
15"	12"
18"	15"
21"	18"
24"	18"
27"	18"

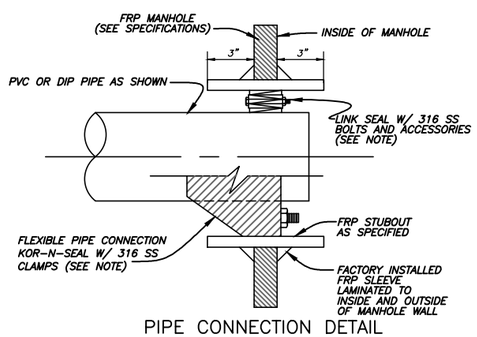

PIPE CONNECTION DETAIL

NOTE:
FORCE MAIN PIPE CONNECTIONS TO FRP MANHOLES SHALL BE MADE WITH "LINK SEAL."
GRAVITY SEWER PIPE CONNECTIONS SHALL BE MADE WITH "KOR–N–SEAL."

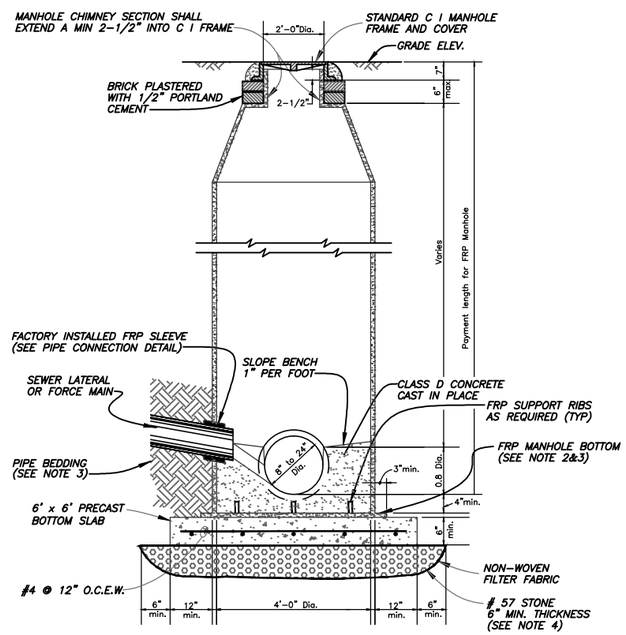

SECTION A–A

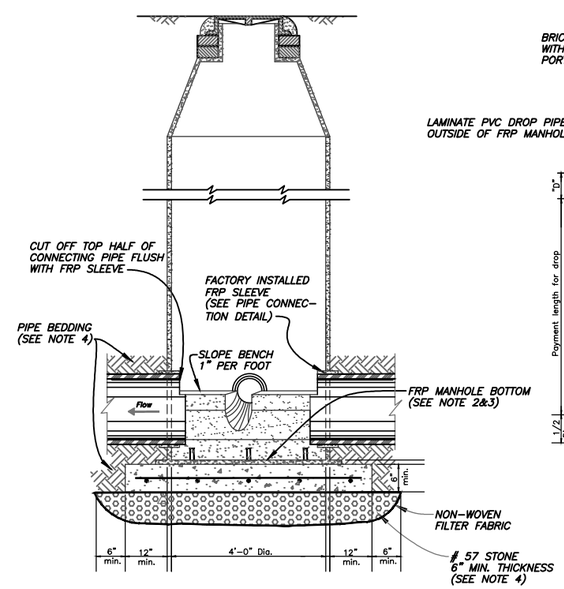

SECTION B–B

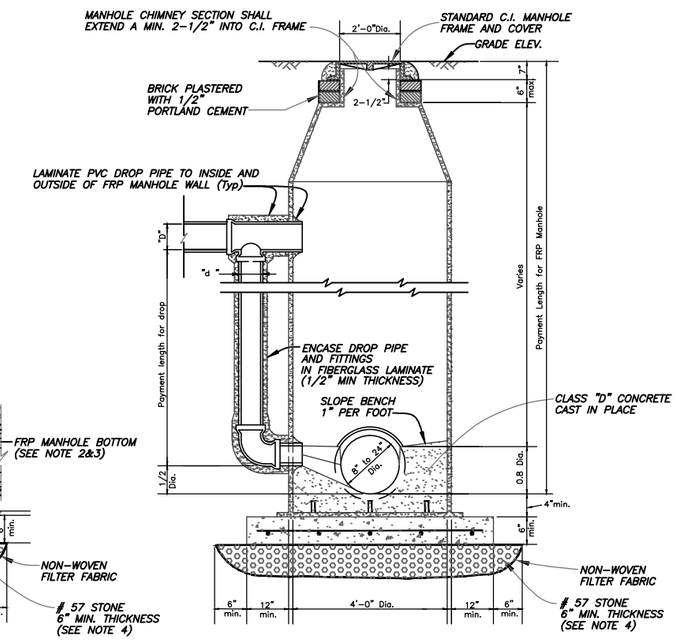

SECTION C–C

User: sse8 Drawing Name: K:\WW_Projects\2014\2014_Wastewater Collection System Repair FY2014\Dwg\Wastewater Collection System repair FY2014.dwg
Layout: Fiberglass Manhole Plotted: 8/30/2016 1:19:26 PM CTB: WW–TOSHIBA.CTB Default LW: 25mm

	No.	DATE	REVISIONS
JACINTO CARLOS FERRAS, P.E. #49454 DESIGN DIVISION HEAD WASTEWATER DEPARTMENT	3		
	2		
	1		

DES: DR
DRN: BL
CKD:
DATE:

CITY of TAMPA
WASTEWATER DEPARTMENT

STANDARD DETAILS
FIBERGLASS MANHOLE

W.O. ----
SHEET 9 OF 10

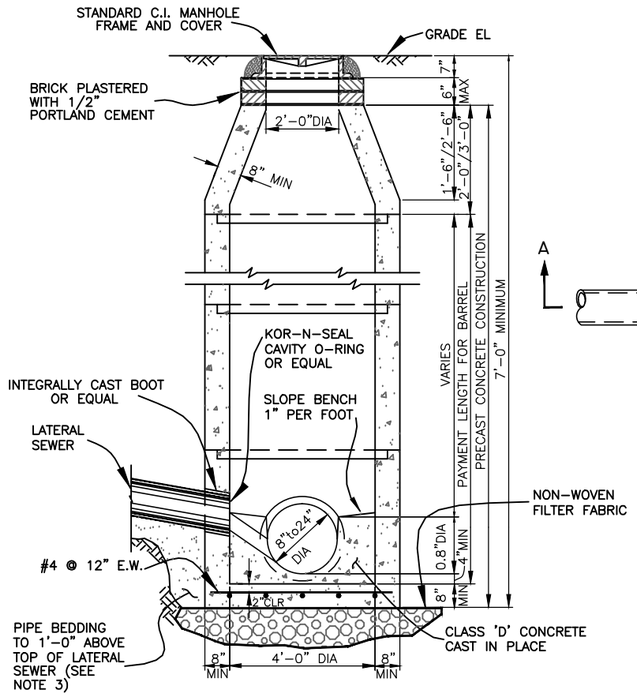

SECTION A-A

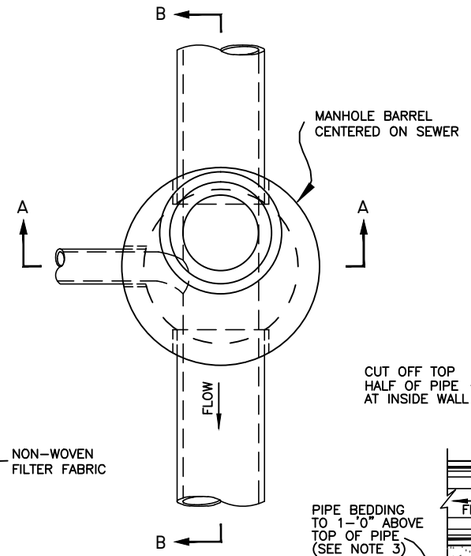

PLAN

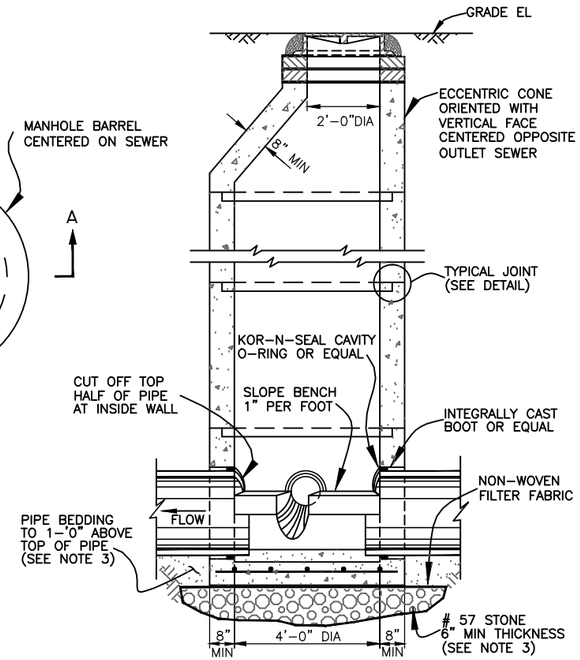

SECTION B-B

STANDARD MANHOLE – DEEP TYPE

FOR SEWERS 24" OR LESS IN DIAMETER

N.T.S

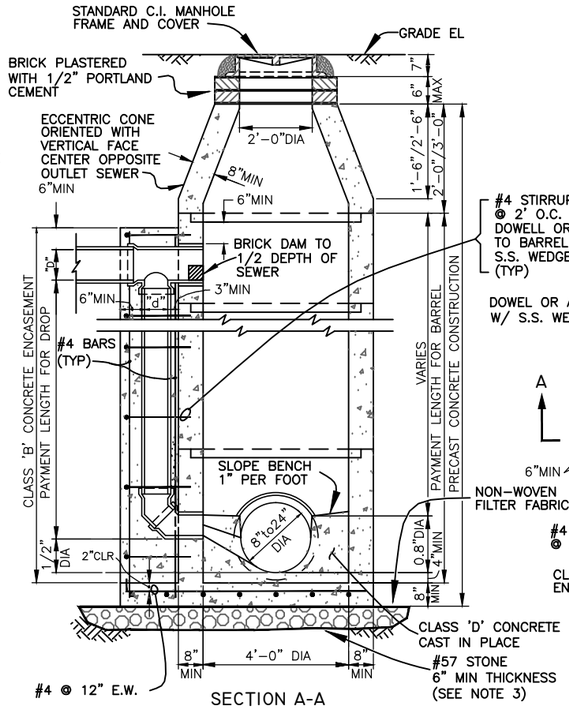

SECTION A-A

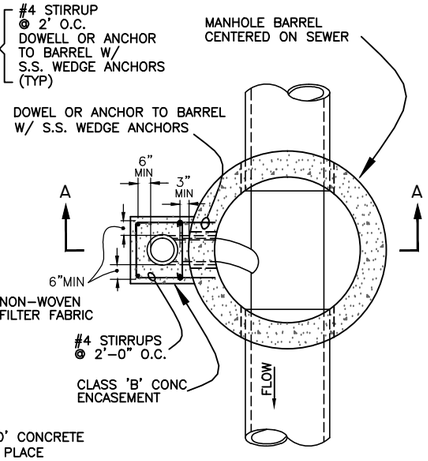

SECTIONAL PLAN

STANDARD DROP MANHOLE

FOR SEWERS 24" OR LESS IN DIAMETER

N.T.S

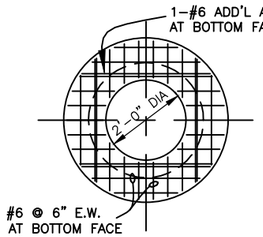

CONCRETE SLAB DETAIL
SECTION C-C

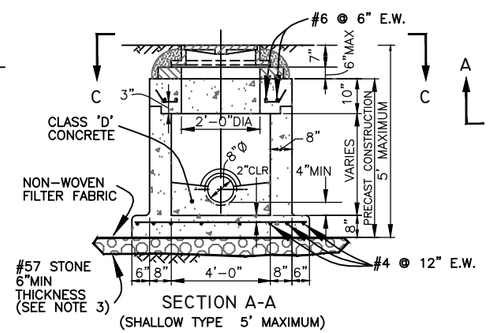

SECTION A-A
(SHALLOW TYPE 5' MAXIMUM)

STANDARD MANHOLE – SHALLOW TYPE

FOR SEWERS 24" OR LESS IN DIAMETER

N.T.S

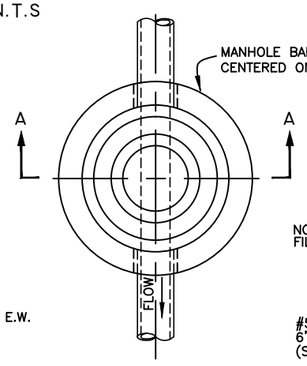

PLAN

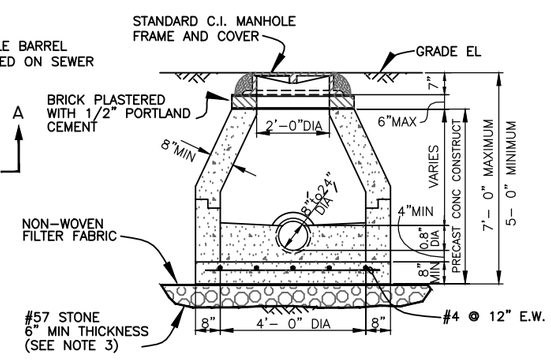

SECTION A-A
5'-0" TO 7'-0" DEEP
(SEE NOTE 4)

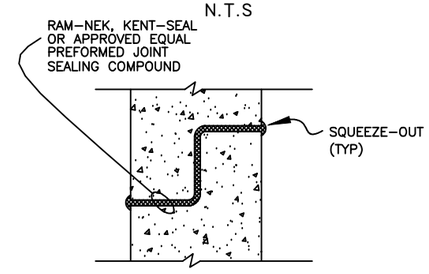

MANHOLE BARREL JOINT DETAIL

N.T.S

(SEE NOTE 5)

SCHEDULE FOR DROP MANHOLE	
INLET PIPE DIAMETER "D"	DROP PIPE DIAMETER "d"
8"	8"
10"	8"
12"	10"
15"	12"
18"	15"
21"	18"
24"	18"

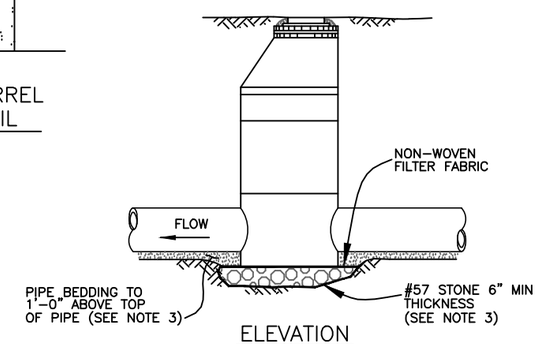

ELEVATION

FOR SEWERS 24" OR LESS IN DIAMETER

N.T.S

NOTES

1. REINFORCING STEEL FOR ALL MANHOLES SHALL CONFORM TO ASTM-C478 AND PLACED AS DESCRIBED IN THE SPECIFICATIONS.
2. ALL PIPE STUBS FROM MANHOLES FOR FUTURE CONNECTIONS OR OTHER CONTRACT DIVISIONS SHALL BE PROVIDED WITH WATER TIGHT PLUGS PLACED FROM WITHIN THE MANHOLE.
3. SEE SPECIFICATIONS FOR MATERIALS REQUIREMENTS AND PLACEMENTS AND COMPACTION OF PIPE AND STRUCTURE BEDDING.
4. STANDARD SHALLOW-TYPE MANHOLES WITH DEPTHS BETWEEN A MAXIMUM OF 7'-0" AND A MINIMUM OF 5'-0" MUST HAVE A CONCRETE CONE FOR THE TOP SECTION.
5. ALL MANHOLE JOINTS MUST BE SEALED WITH AN ACCEPTABLE JOINT SEALING COMPOUND REGARDLESS OF WHETHER AN O-RING GASKET IN A PREFORMED GROOVE IS USED.
6. FILTER FABRIC SHALL BE NON-WOVEN FABRIC PER D.O.T. SPECIFICATION SECTIONS 514 AND 985 AND SHALL BE WRAPPED ENTIRELY AROUND THE #57 STONE.

JACINTO CARLOS FERRAS, P.E. #49454
DESIGN DIVISION HEAD
WASTEWATER DEPARTMENT

No.	DATE	REVISIONS
3		
2		
1		

DES: DR
DRN: BL
CKD:
DATE:

CITY of TAMPA
WASTEWATER DEPARTMENT

STANDARD DETAILS
STANDARD MANHOLE 8" TO 24"

W.O. ----
SHEET 10 OF 10

User: sse8 Drawing Name: K:\WW_Projects\2014\2014_Wastewater Collection System Repair FY2014\Dwg\Wastewater Collection System repair FY2014.dwg
Layout: Standard Manhole 8 to 24 Plotted: 8/30/2016 1:19:31 PM CTB: WW-TOSHIBA.CTB Default LW: 25mm