B089-102

LOCATION MAP

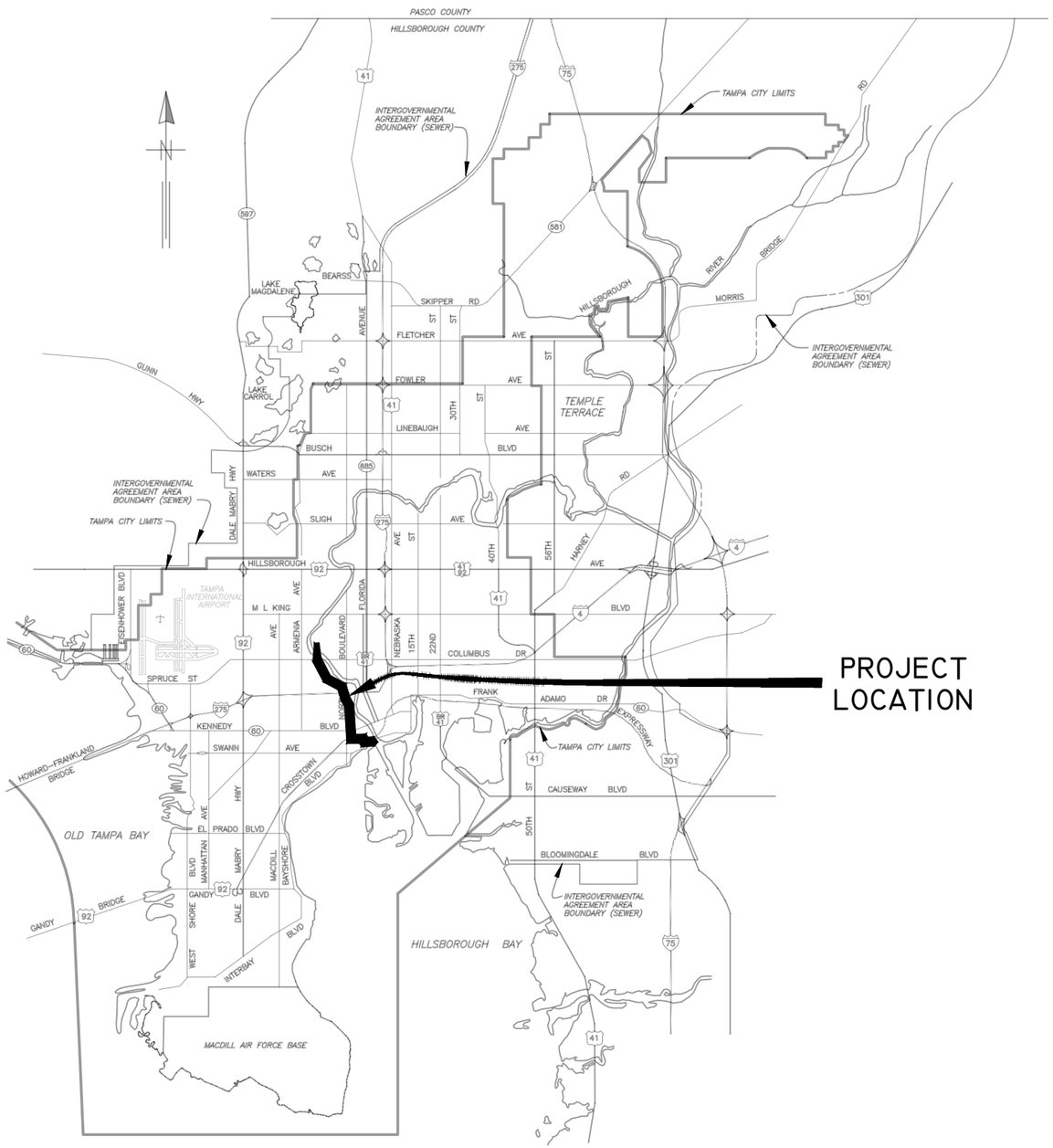


# CITY of TAMPA

# WASTEWATER DEPARTMENT

PLANS FOR

# WEST RIVER INTERCEPTOR CLEANING

CONTRACT No.

17-C-00006

| No. | DATE | REVISIONS |
|---|---|---|
| 3 | | |
| 2 | | |
| 1 | | |

JACINTO CARLOS FERRAS, P.E. #49454
DESIGN DIVISION HEAD
WASTEWATER DEPARTMENT

DES: KJG
DRN: MRL
CKD:
DATE: 11/4/16

CITY of TAMPA
WASTEWATER DEPARTMENT

WEST RIVER INTERCEPTOR CLEANING

COVER SHEET

SHEET 1

User: ss8k Drawing Name: K:\WasteWater Projects\West River 60-inch Interceptor Cleaning\Drafting\DWG\west river interceptor cleaning.dwg
Layout- Nov 04, 2016 - 9:19am CTB - WW-TOSHIBA.CTB

## GENERAL NOTES

1. THE SCOPE OF THIS PROJECT IS TO CLEAN THE WEST RIVER INTERCEPTOR FROM THE PERRY SIPHON TO KRAUSE PUMP STATION BY A COMBINATION OF HYDRAULIC HIGH VOLUME WATER PUMPING AND SOLIDS SEPARATION CLOSED LOOP SYSTEM. THE CLEANING WILL INCLUDE APPROXIMATELY 15,000 LINEAR FEET OF 60–INCH DIAMETER GRAVITY PIPE, AND 4 HILLSBOROUGH RIVER CROSSINGS (INVERTED SIPHONS) WHICH INCLUDES, 400 LINEAR FEET OF 48–INCH DIAMETER PIPE, 800 LINEAR FEET OF 36–INCH DIAMETER PIPE AND 400 LINEAR FEET OF 20–INCH DIAMETER PIPE.

2. CLEANING SHALL CONSIST OF REMOVING ALL FOREIGN MATERIAL FROM THE WASTEWATER PIPE LINES TO A MINIMUM OF 95% OF ITS ORIGINAL CARRYING CAPACITY. CLEANING METHOD SHALL SUCCESSFULLY REMOVE DIRT, GREASE, ROCKS, SAND AND OTHER MATERIALS FROM THE PIPE AND MANHOLES. THE CONTRACTOR MUST PROVIDE A MEANS OF CAPTURING AND DISPOSING OF THE REMOVED DEBRIS.

3. DUE TO THE HIGH VOLUME OF FLOW IN THE INTERCEPTOR, IT IS THE CITY'S INTENT THAT CLEANING AND SONAR/CCTV INSPECTION WILL BE COMPLETED WITHOUT BYPASS PUMPING. WORK DURING LOW FLOW PERIODS OR NIGHT TIME WORK MAY BE REQUIRED. THE PROPOSED CLEANING METHOD SHALL PREVENT DEBRIS FROM FLOWING DOWNSTREAM.

4. A DETAILED WORK PLAN SHALL BE SUBMITTED AND APPROVED BY THE ENGINEER.

5. CONTRACTOR SHALL BE FULLY RESPONSIBLE FOR OBTAINING THE NECESSARY RIGHT–OF WAY AND ROAD CLOSURE PERMITS, AS APPLICABLE, FROM THE APPROPRIATE GOVERNMENT AGENCIES HAVING JURISDICTION OVER THE SPECIFIC ROADWAYS.

6. IN ORDER TO OBTAIN ROADWAY CLOSURE OR RIGHT–OF–WAY PERMITS, AT MINIMUM, THE CONTRACTOR MUST SUBMIT DETAILED MAINTENANCE OF TRAFFIC (MOT) PLANS ALONG WITH APPLICATIONS TO THE APPROPRIATE AGENCY. THE MOT(S) SHALL CONFORM TO THE APPLICABLE FLORIDA DEPARTMENT OF TRANSPORTATION (FDOT) INDEX DRAWING (MOST CURRENT EDITION). THE GOVERNING AGENCIES MAY REQUIRE ADDITIONAL INFORMATION AND DICTATE SPECIFIC WORK TIMES DURING NON–PEAK TRAFFIC HOURS. ALL FEES ASSOCIATED WITH THE PERMITS WILL BE PAID BY THE CITY USING THE CONTINGENCY FUNDS.

7. DURING THE MOT, CONTRACTOR MUST MAINTAIN ACCESS TO ALL DRIVEWAYS FOR THE DURATION OF THE PROJECT.

8. CONTRACTOR SHALL COORDINATE WITH UNIVERSITY OF TAMPA PERSONNEL TO ACCESS AND CLOSE ANY ROADWAY INSIDE THE UNIVERSITY CAMPUS, AS APPLICABLE.

9. CONTRACTOR SHALL TAKE ALL PRECAUTIONARY MEASURES TO ENSURE THE SAFETY OF EMPLOYEES AND THE PUBLIC.

10. THE CONSTRUCTION SITE SHALL BE MAINTAINED IN AS NEAT AND ORDERLY CONDITION AS POSSIBLE DURING CLEANING OPERATIONS.

11. CONTRACTOR SHALL RESTORE ALL LANDSCAPING, SODDING AND EXISTING STRUCTURES THAT MAY HAVE BEEN DAMAGED DURING CLEANING OPERATIONS TO ITS ORIGINAL CONDITION OR BETTER AT NO ADDITIONAL COST TO THE CITY.

12. ALL DEBRIS MATERIAL SHALL BE TEMPORARILY STORED AT THE CITY OF TAMPA – HOWARD F. CURREN ADVANCED WASTEWATER TREATMENT PLANT LOCATED AT 2700 MARITIME BOULEVARD, TAMPA, FL 33605. TOXICITY CHARACTERISTIC LEACHING PROCEDURE (TCLP) SHALL BE PERFORMED BY THE CONTRACTOR BEFORE HAULING THE MATERIAL TO THE LANDFILL. THE CONTRACTOR SHALL BE RESPONSIBLE FOR LOADING, HAULING AND REMOVING ALL DEBRIS MATERIAL TO AN APPROVED OFFSITE DISPOSAL FACILITY WITHIN 30 DAYS OF COMPLETION OF THE CLEANING OPERATION.

13. CONTRACTOR SHALL COORDINATE ALL CONSTRUCTION ACTIVITIES WITH WASTEWATER TREATMENT PLANT PERSONNEL AND PUMPING STATION OPERATIONS.

14. OSHA STANDARD EQUIPMENT SUCH AS SAFETY HARNESSES, GAS MONITORS, LOWER EXPLOSIVE LIMIT (LEL) DETECTORS, BREATHING APPARATUS, ETC. SHALL BE UTILIZED WHERE THE WORK DICTATES THEIR USE.

15. CONTRACTOR SHALL PERFORM POST–CLEANING SONAR/CLOSED CIRCUIT TELEVISION (CCTV) INSPECTION OF ALL PIPELINES TO CONFIRM AT LEAST 95% AT ANY GIVEN DIAMETER OF THE PIPELINE HAS BEEN RESTORED. THE INSPECTION SHALL ALSO INCLUDE A CONDITION ASSESSMENT FOLLOWING PACP DEFECT CODING.

## INDEX


| SHEET # | DESCRIPTION |
|---|---|
| 1 | COVER |
| 2 | GENERAL NOTES AND INDEX |
| 3 | PROJECT LOCATION MAP – PHASE I |
| 4 | PROJECT LOCATION MAP – PHASE II |
| 5 – 69 | AS–BUILT DRAWINGS (IN NUMERICAL ORDER) |


AS–BUILT DRAWINGS ARE BEING PROVIDED FOR INFORMATIONAL PURPOSES ONLY AND ARE NOT INTENDED TO SHOW ADDITIONAL WORK FOR THIS CONTRACT. THE CITY DOES NOT GUARANTEE THE ACCURACY OF THE AS–BUILT DRAWINGS.

# West River Interceptor Cleaning

## Project Location Map - Phase I

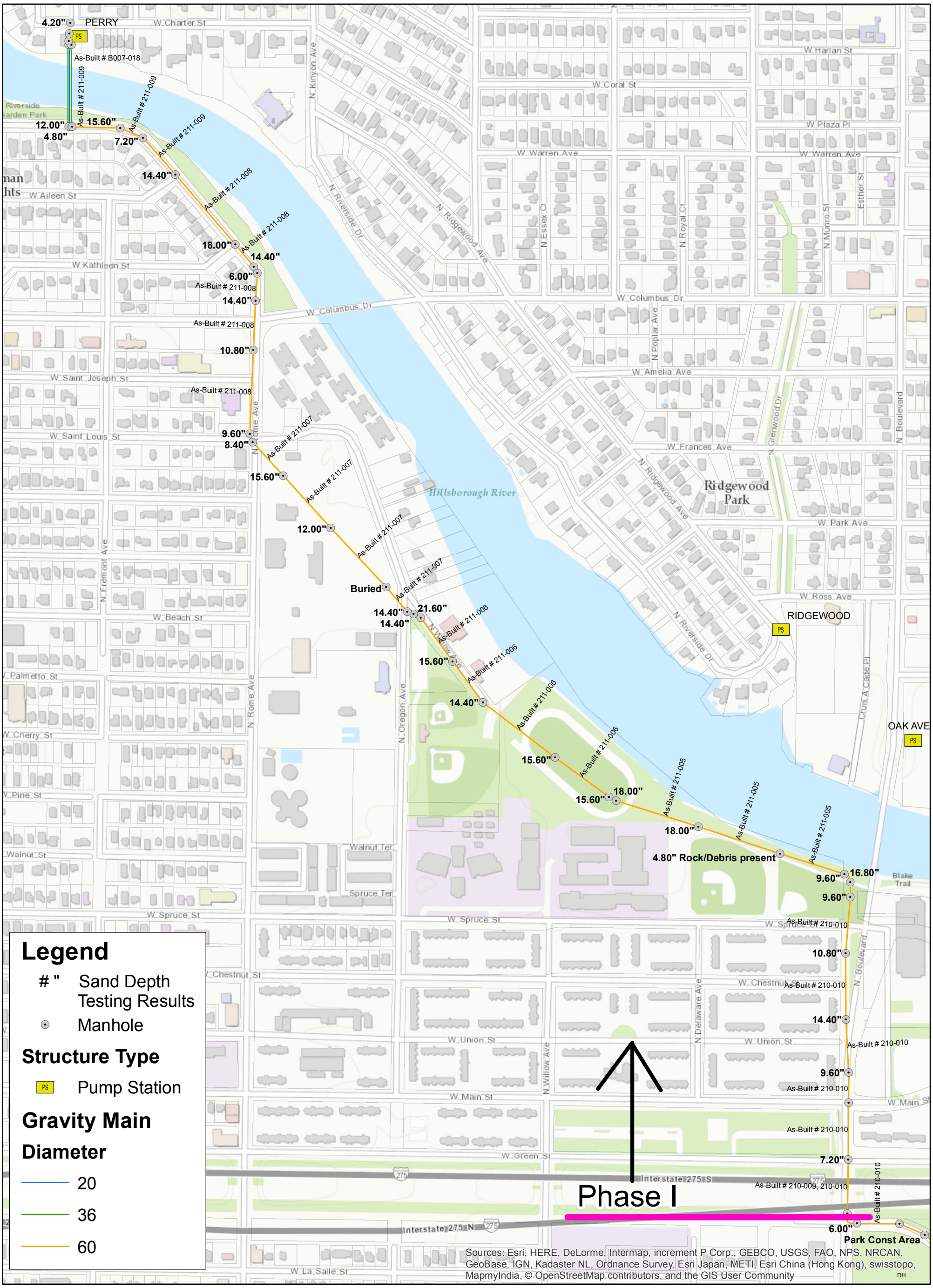


0 200 400 800 1,200 1,600 Feet

1 inch = 400 feet

City of Tampa Florida

**Wastewater Department**

**Sheet 3**

N

# West River Interceptor Cleaning

## Project Location Map - Phase II

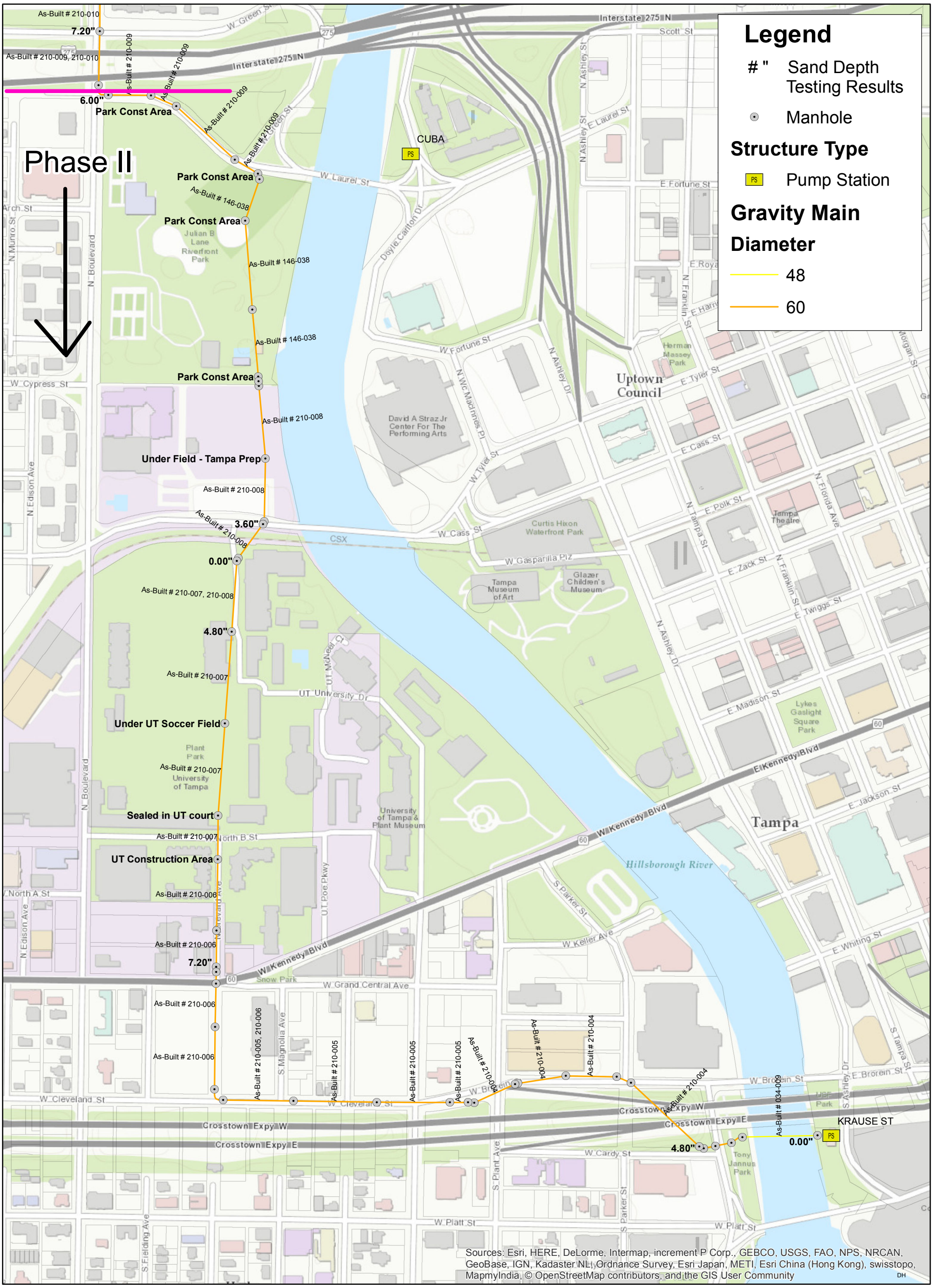


0 200 400 800 1,200 1,600 Feet

1 inch = 400 feet

City of Tampa Florida

**Wastewater Department**

**Sheet 4**

N

B007-018

NOTE:
SEE SHEET 4 FOR DESCRIPTION OF PROPOSED WORK

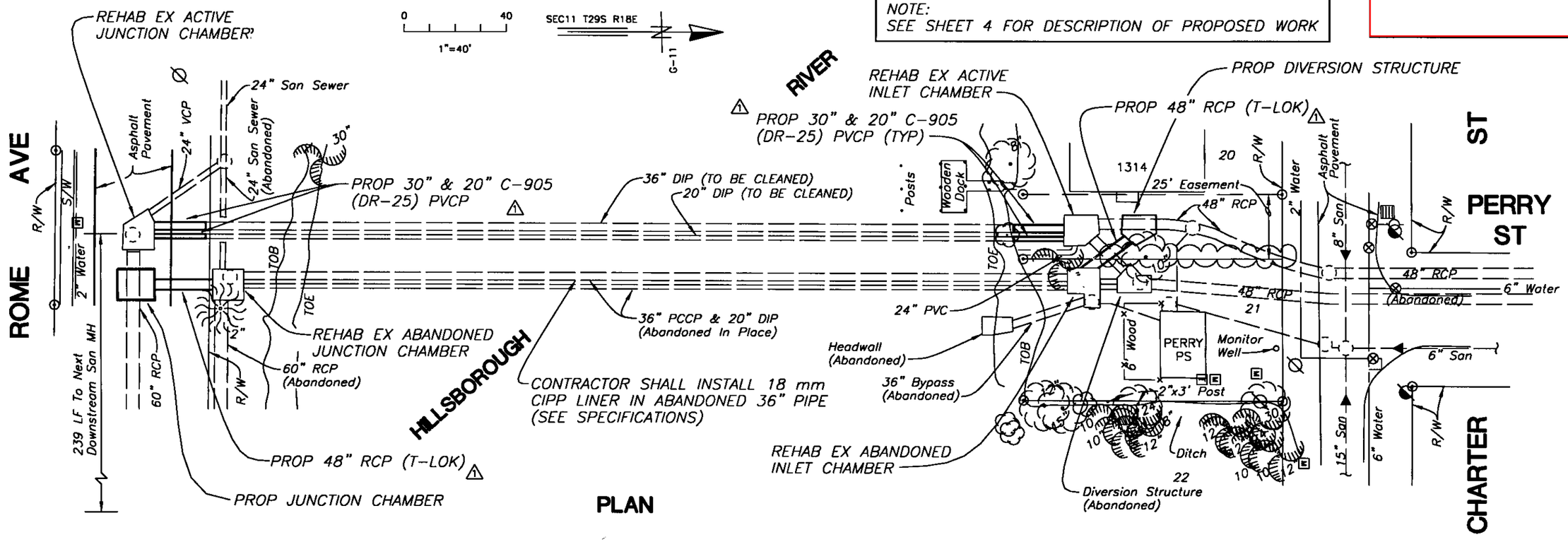


PLAN

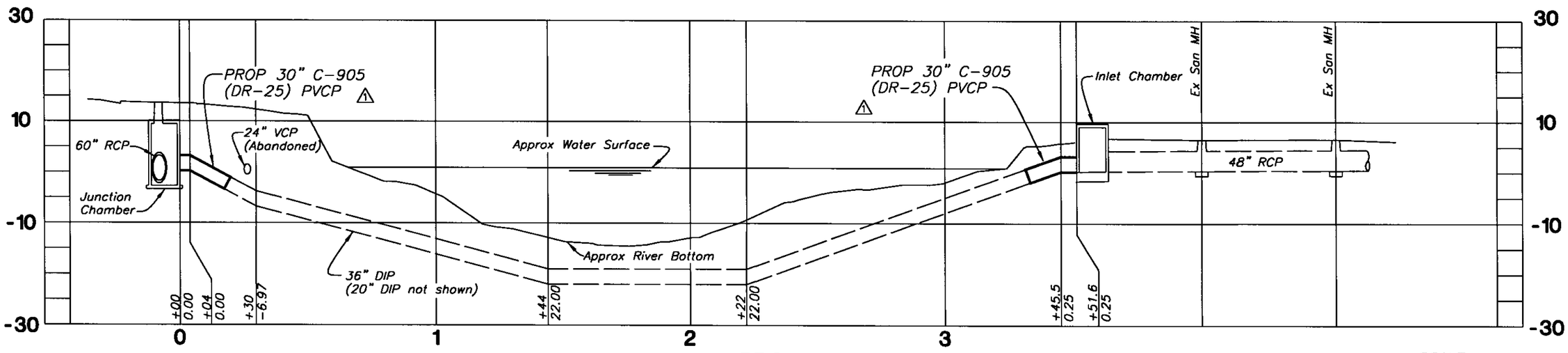


PROFILE

SCALE:
1" = 40' Horiz
1" = 20' Vert

HENRY DORZBACK, P.E. #39449
CHIEF ENGINEER
DEPARTMENT OF SANITARY SEWERS

RALPH L. MEETCALF II, P.E.
DIRECTOR
DEPARTMENT OF SANITARY SEWERS

DES: JF
DRN: BK
CKD:
DATE:

| No. | DATE | REVISIONS |
|---|---|---|
| 1 | 6/22/98 | REVISED PIPE SIZE AND PIPE TTYPE |
| 2 | | |
| 3 | | |

CITY of TAMPA
DEPARTMENT OF SANITARY SEWERS

HILLSBOROUGH RIVER - PERRY AVENUE CROSSING REHABILITATION
PLAN & PROFILE

W.O. 4736
SHEET 3 OF 18

c:\r14\dwg\ps\perry2-street 40

B007-019

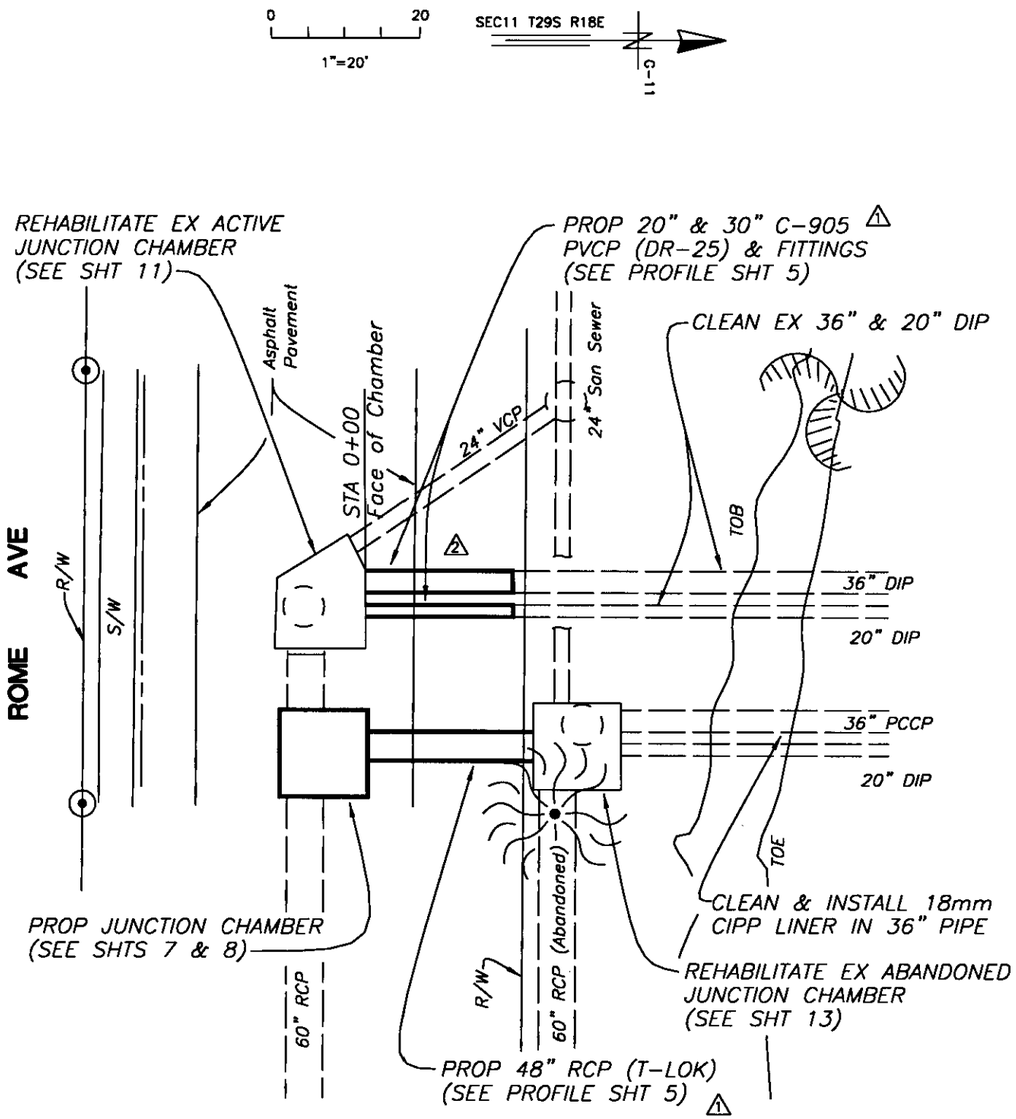


SOUTH SIDE PLAN

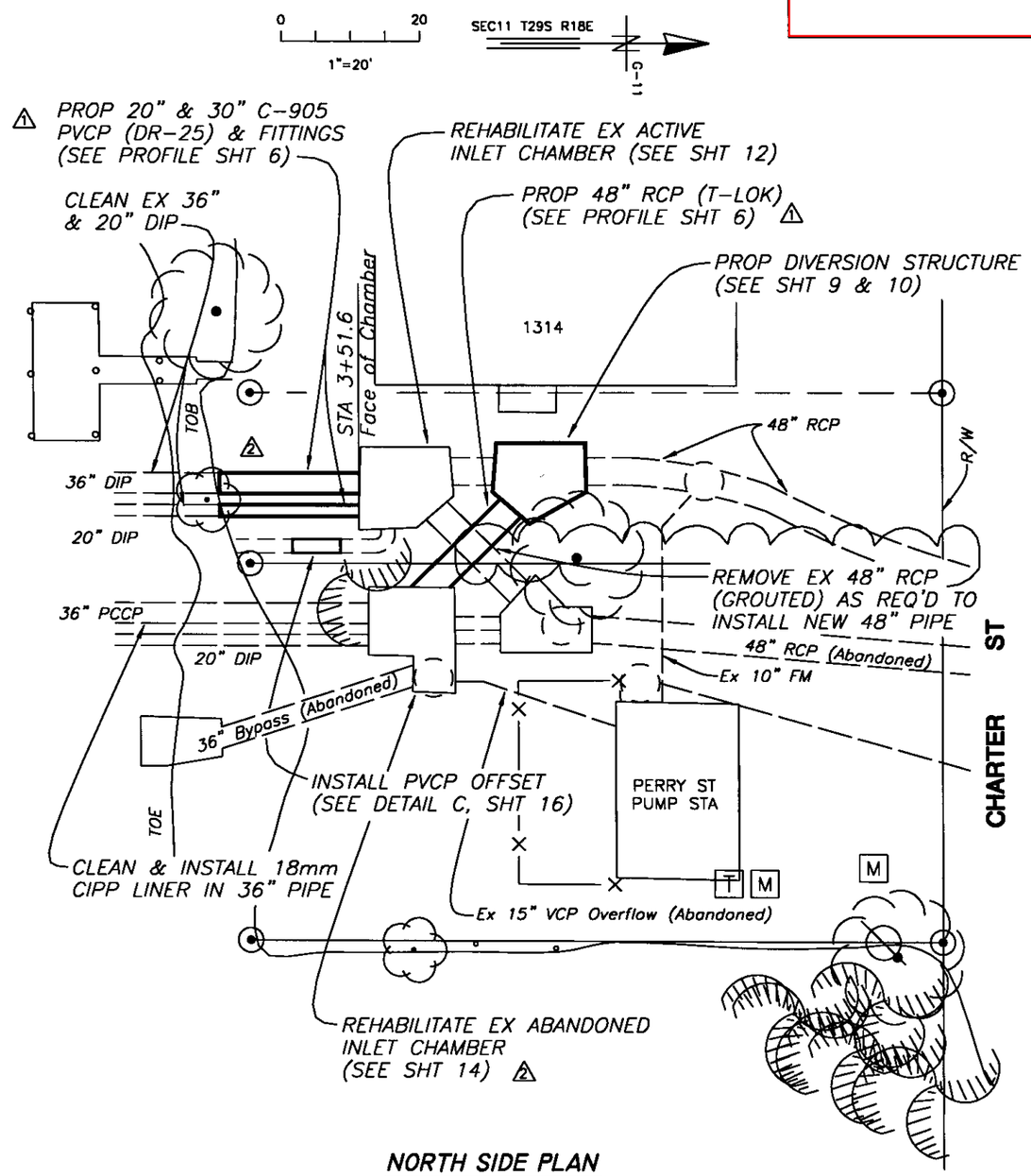


NORTH SIDE PLAN

c:\r14\dwg\ps\perry2-street 40

R14

HENRY DORZBACK, P.E. #39449
CHIEF ENGINEER
DEPARTMENT OF SANITARY SEWERS

RALPH L. MEETCALF II, P.E.
DIRECTOR
DEPARTMENT OF SANITARY SEWERS

DES: JF
DRN: BK
CKD:
DATE:

| No. | DATE | REVISIONS |
|---|---|---|
| 1 | 6/22/98 | REVISED PIPE SIZE AND PIPE TTYPE |
| 2 | 6/22/98 | CORRECTED PIPE LENGTH AND CCHAMBER TYPE |
| 3 | | |

CITY of TAMPA
DEPARTMENT OF SANITARY SEWERS

HILLSBOROUGH RIVER - PERRY AVENUE CROSSING REHABILITATION
SOUTH SIDE & NORTH SIDE PLANS

W.O. 4736
SHEET 4 OF 18

B007-020

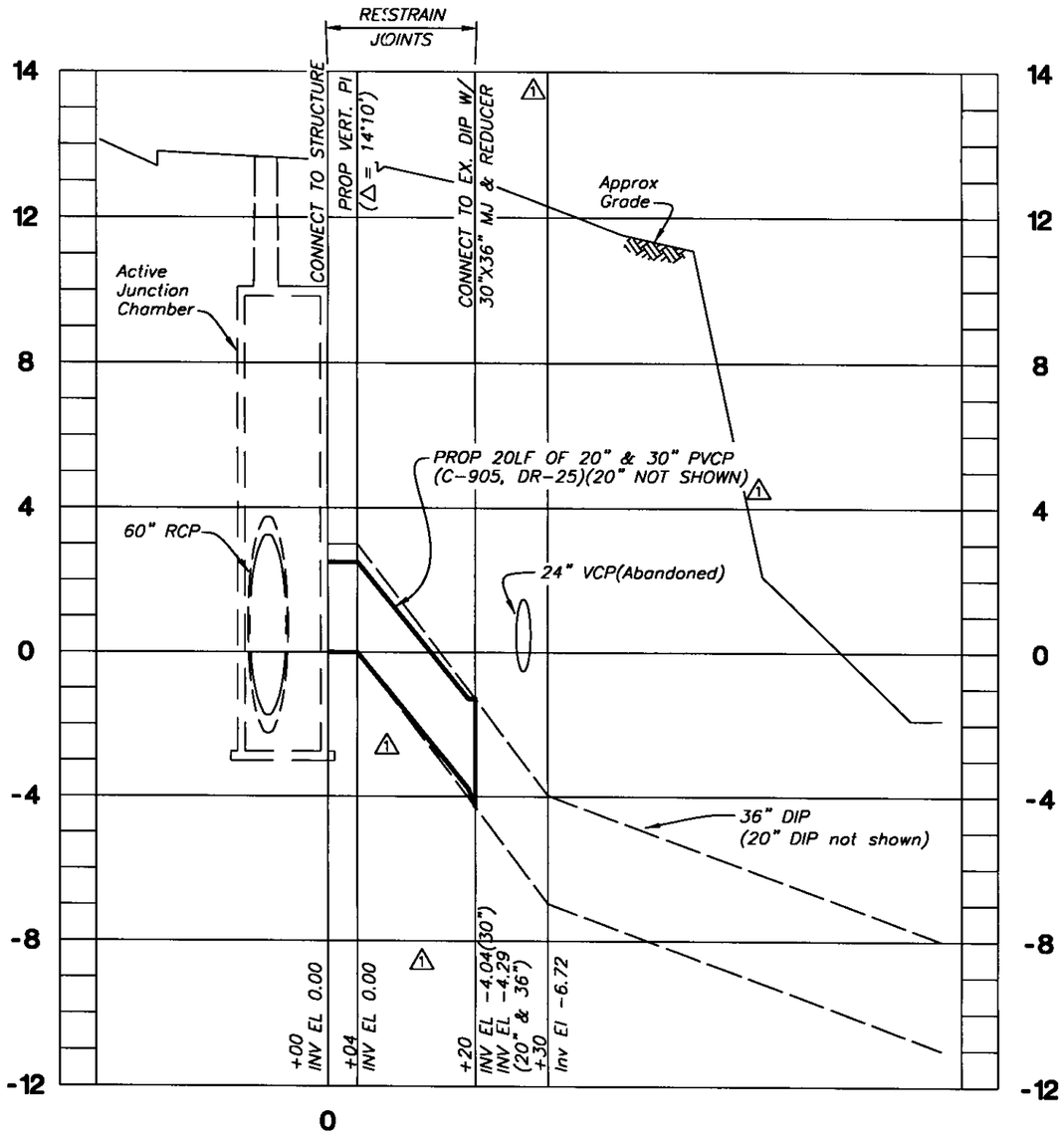


SIPHON PROFILE

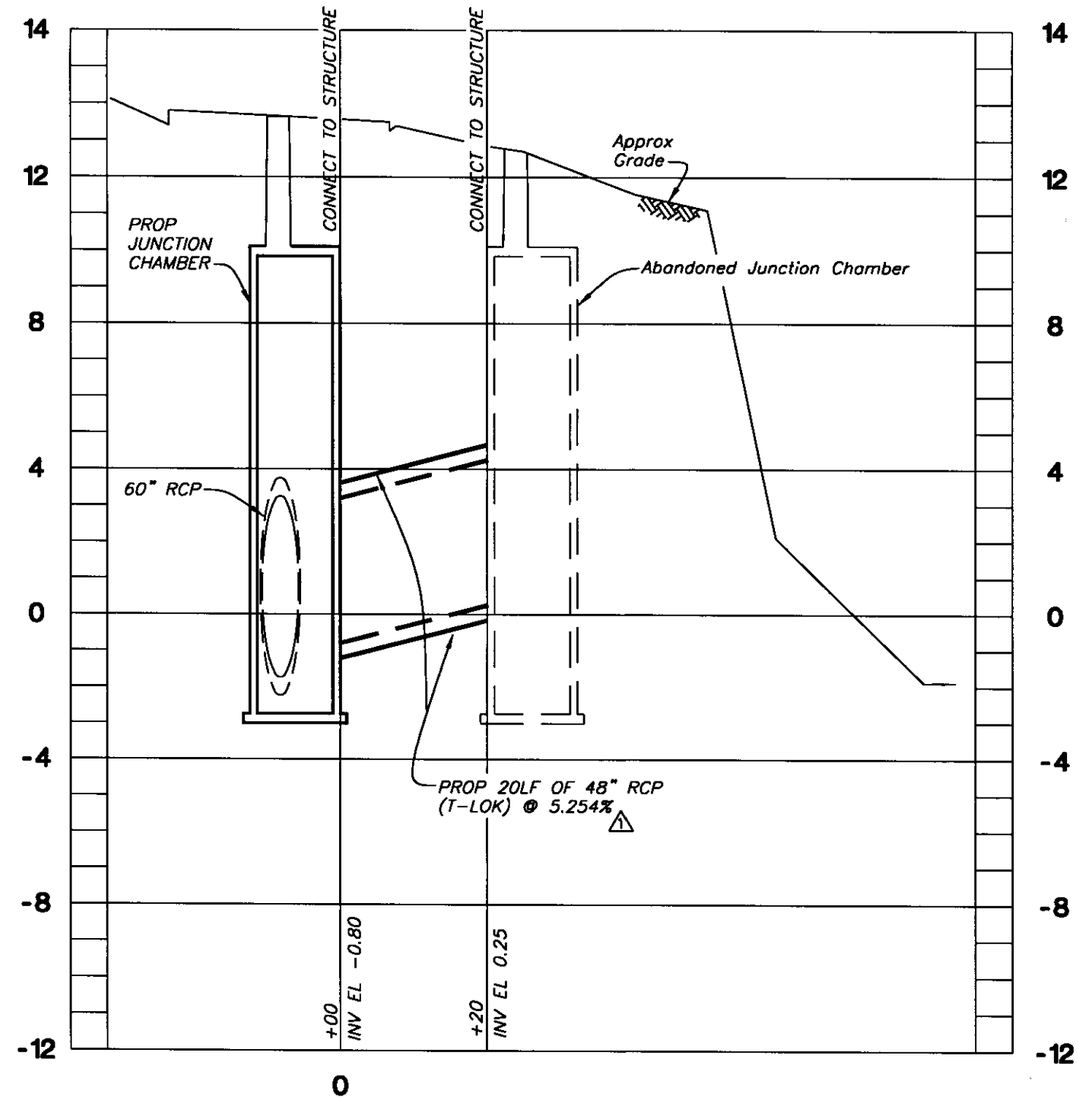


INTERCEPTOR PROFILE

SCALE
1"=20' Horiz
1"=4' Vert

HENRY DORZBACK, P.E. #39449
CHIEF ENGINEER
DEPARTMENT OF SANITARY SEWERS

RALPH L. MEETCALF II, P.E.
DIRECTOR
DEPARTMENT OF SANITARY SEWERS

DES: JF
DRN: BK
CKD:
DATE:

| No. | DATE | REVISIONS |
|---|---|---|
| 1 | 6/22/98 | REVISED PIPE SIZE & PIPE TYPE, ADJUSTEED INV EL, ADDED REDUCER AND CORRECTED VERT SISCALE |
| 2 | | |
| 3 | | |

CITY of TAMPA
DEPARTMENT OF SANITARY SEWERS

HILLSBOROUGH RIVER - PERRY AVENUE CROSSING REHABILITATION PROFILES (SOUTH SIDE)

W.O. 4736
SHEET 5 OF 18

R14

c:\r14\dwg\ps\perry2-street 40

B007-021

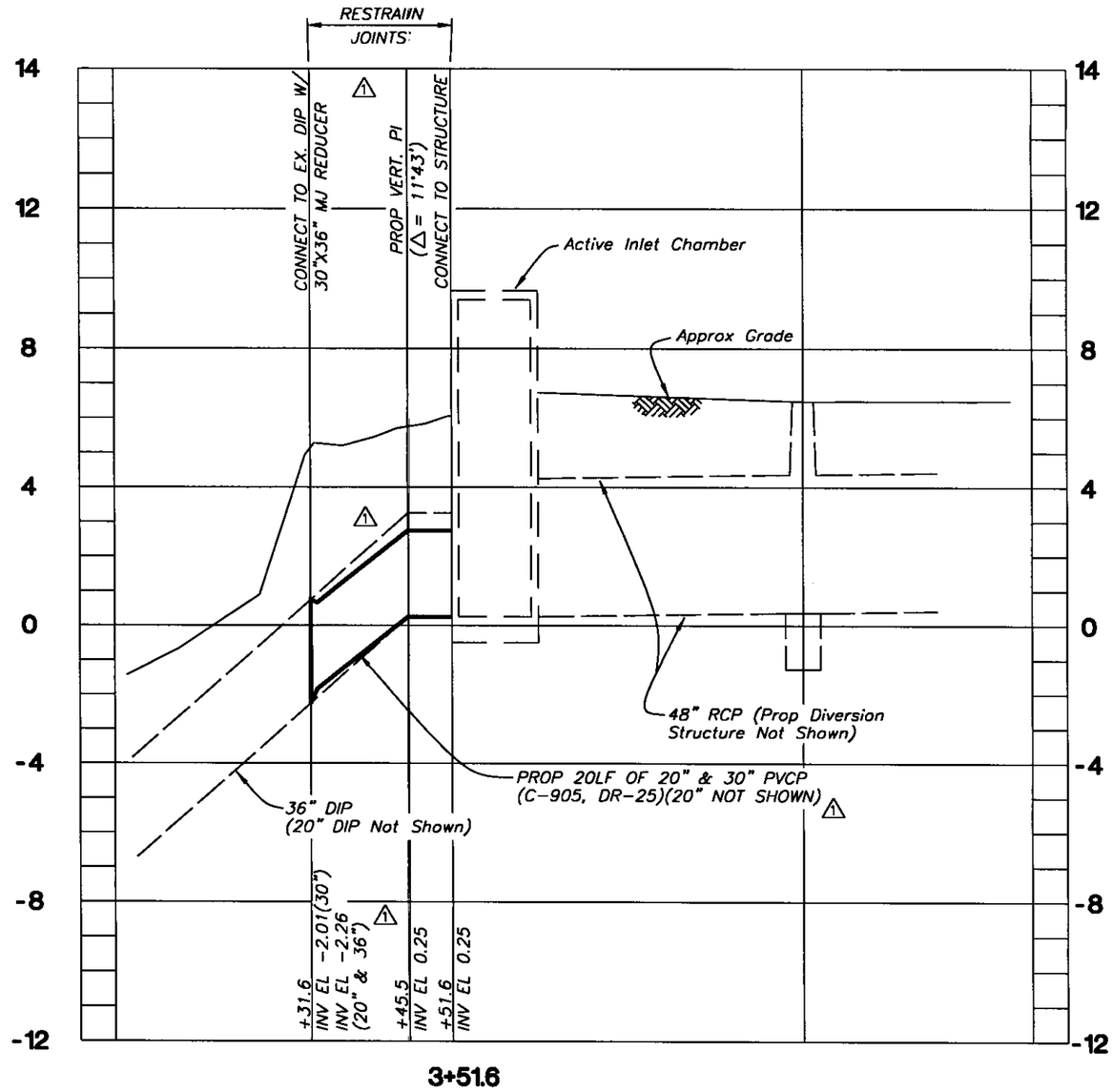


SIPHON PROFILE

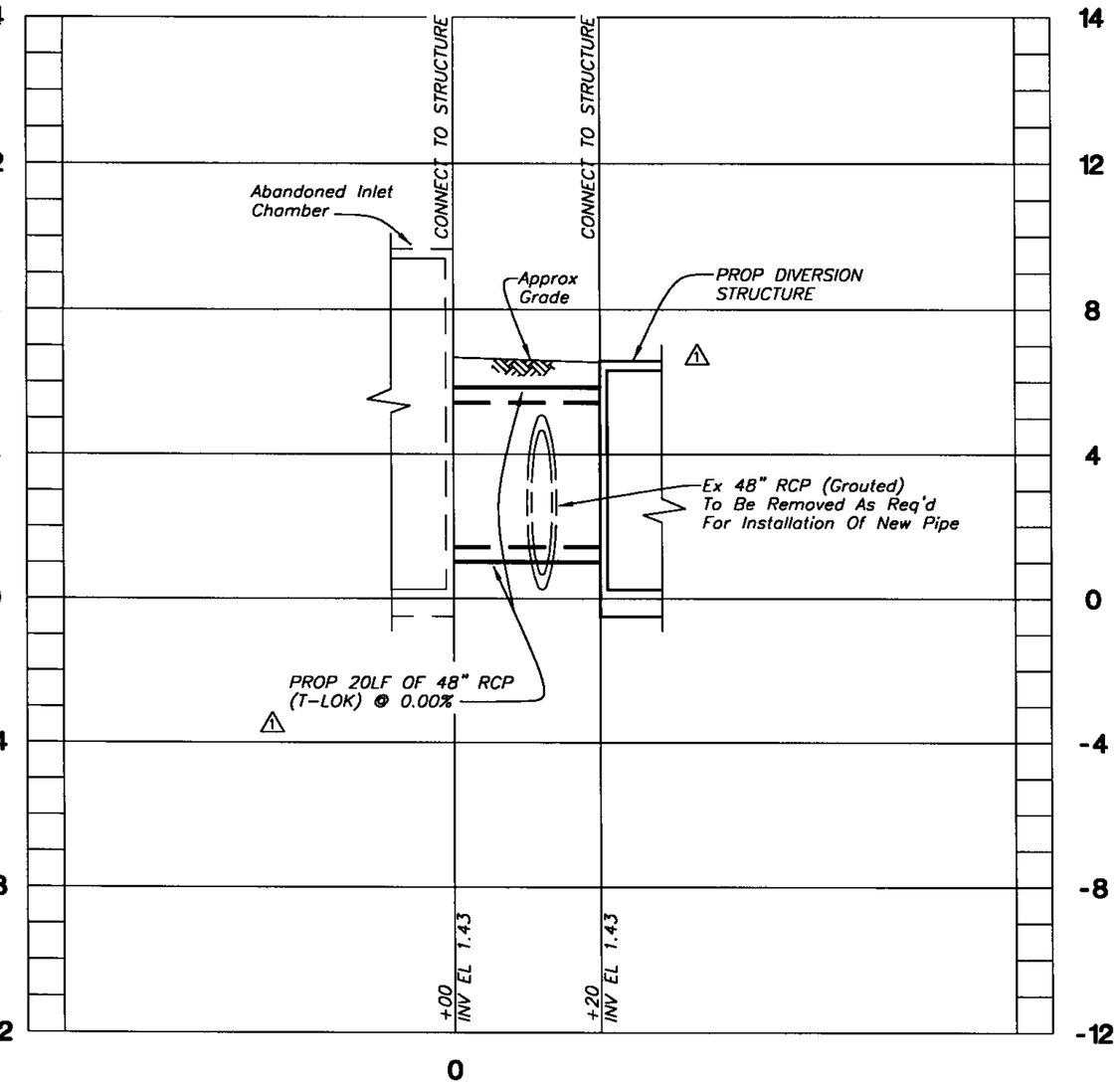


INTERCEPTOR PROFILE

SCALE
1"=20' Horiz
1"=4' Vert

| | | | | | |
|---|---|---|---|---|---|
| HENRY DORZBACK, P.E. #39449<br>CHIEF ENGINEER<br>DEPARTMENT OF SANITARY SEWERS | RALPH L. MEETCALF II, P.E.<br>DIRECTOR<br>DEPARTMENT OF SANITARY SEWERS | DES: JF<br>DRN: BK<br>CKD:<br>DATE: | No. / DATE / REVISIONS<br>1 / 6/22/98 / REVISED PIPE SIZE & PIPE TYPE, ADJUSTTED INV EL, ADDED REDUCER, CORRECTED VERT SCALE & LOWERED STRUCTURE<br>2<br>3 | CITY of TAMPA<br>DEPARTMENT OF SANITARY SEWERS | HILLSBOROUGH RIVER - PERRY AVENUE CROSSING REHABILITATION PROFILES (NORTH SIDE) | W.O. 4736<br>SHEET 6 OF 18 |

R14

c:\r14\dwg\ps\perry2-street 40

B007-022

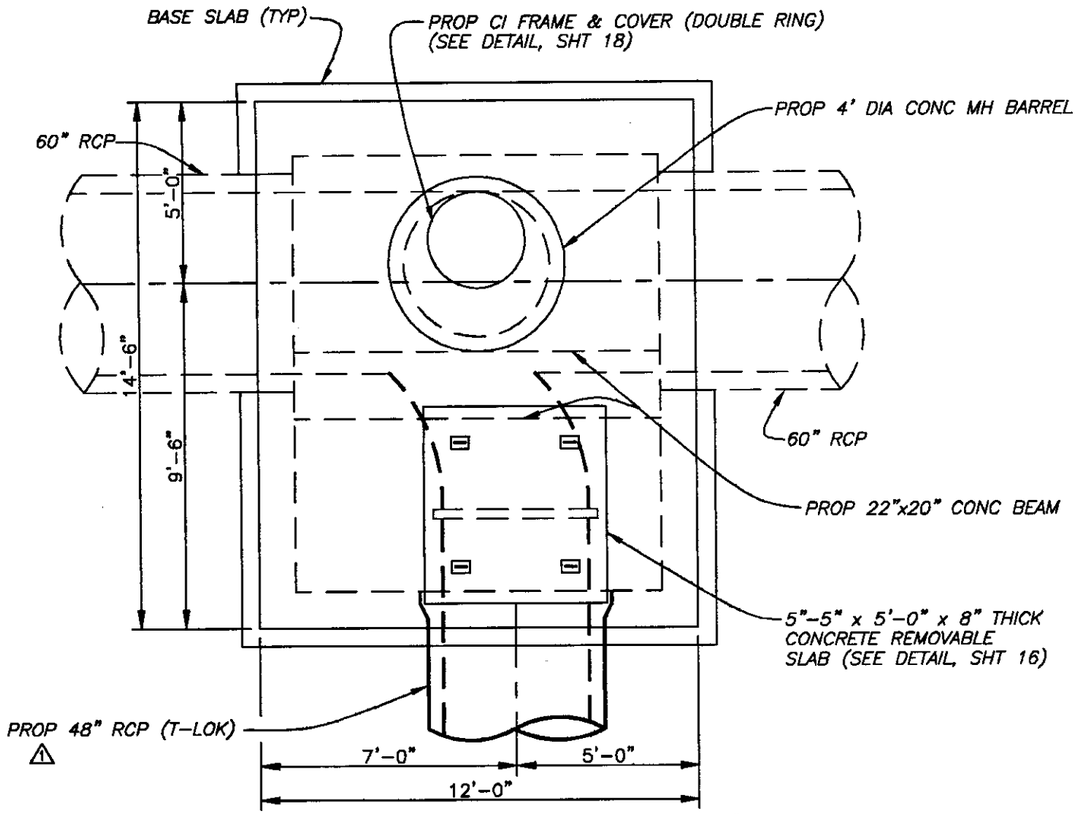


**PLAN**
Scale: 1/4" = 1'

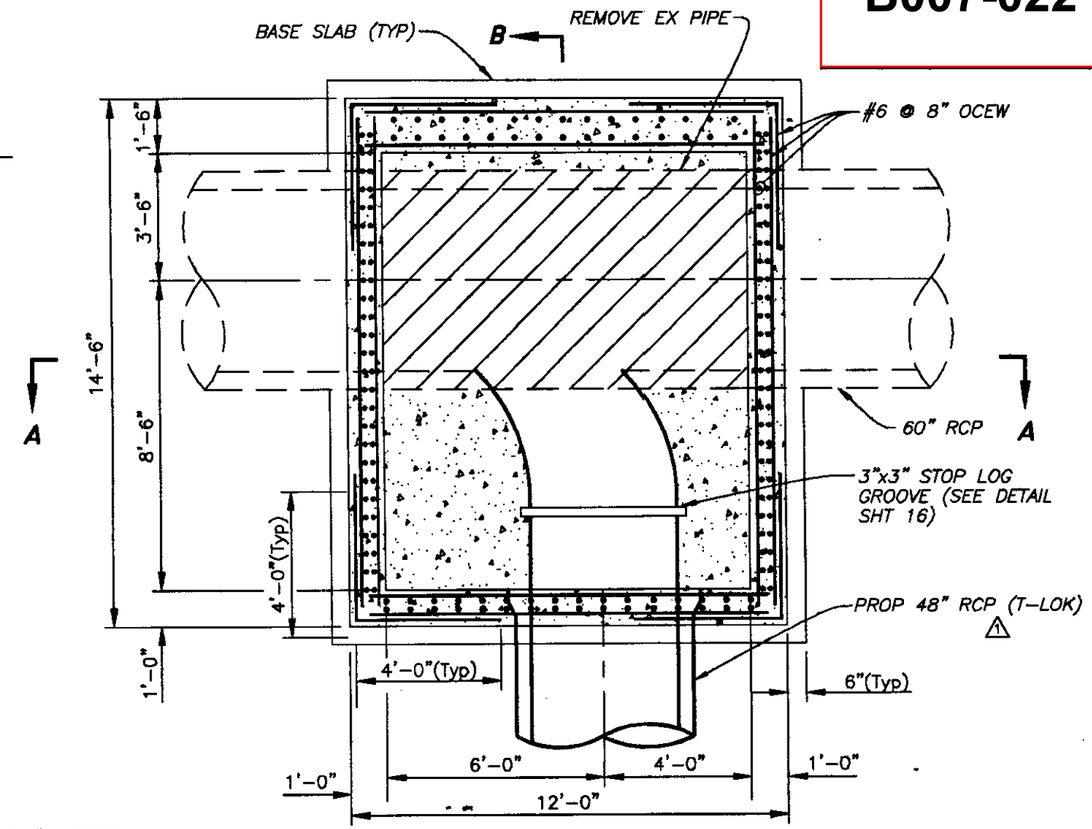


**SECTIONAL PLAN**
Scale: 1/4" = 1'

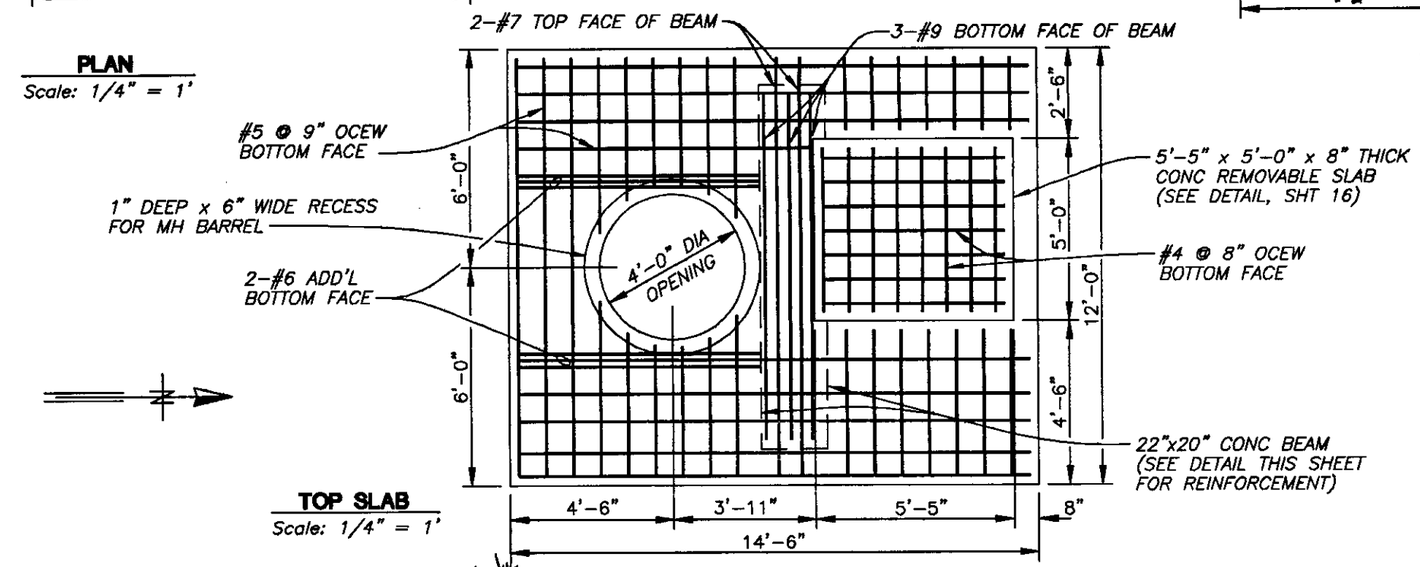


**TOP SLAB**
Scale: 1/4" = 1'

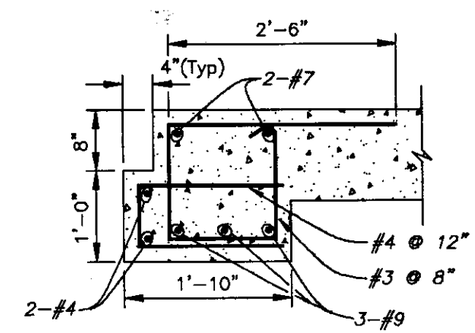


**BEAM DETAIL**
NTS

| | | | | | | |
|---|---|---|---|---|---|---|
| HENRY DORZBACK, P.E. #39449<br>CHIEF ENGINEER<br>DEPARTMENT OF SANITARY SEWERS | RALPH L. METCALF II, P.E.<br>DIRECTOR<br>DEPARTMENT OF SANITARY SEWERS | DES: JF<br>DRN: BK<br>CKD: AH<br>DATE: 6/1/99 | DATE | REVISIONS | CITY of TAMPA<br>DEPARTMENT OF SANITARY SEWERS | HILLSBOROUGH RIVER - PERRY AVENUE CROSSING REHABILITATION<br>PROPOSED JUNCTION CHAMBER SOUTH SIDE |
| | | | 1 | 6/22/98 | REVISED TYPE OF PIPE | W.O. 4736 |
| | | | 2 | | | SHEET 7 |
| | | | 3 | | | OF 18 |

c:\r14\dwg\perry2-detail 1/4"

B7-23

**B007-023**

R14

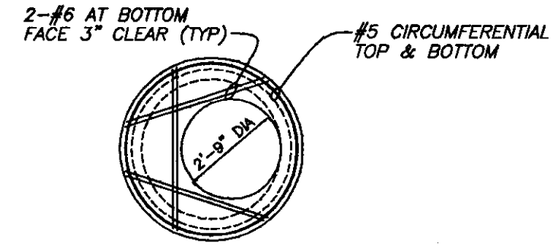


**CONCRETE SLAB DETAIL**
Not To Scale

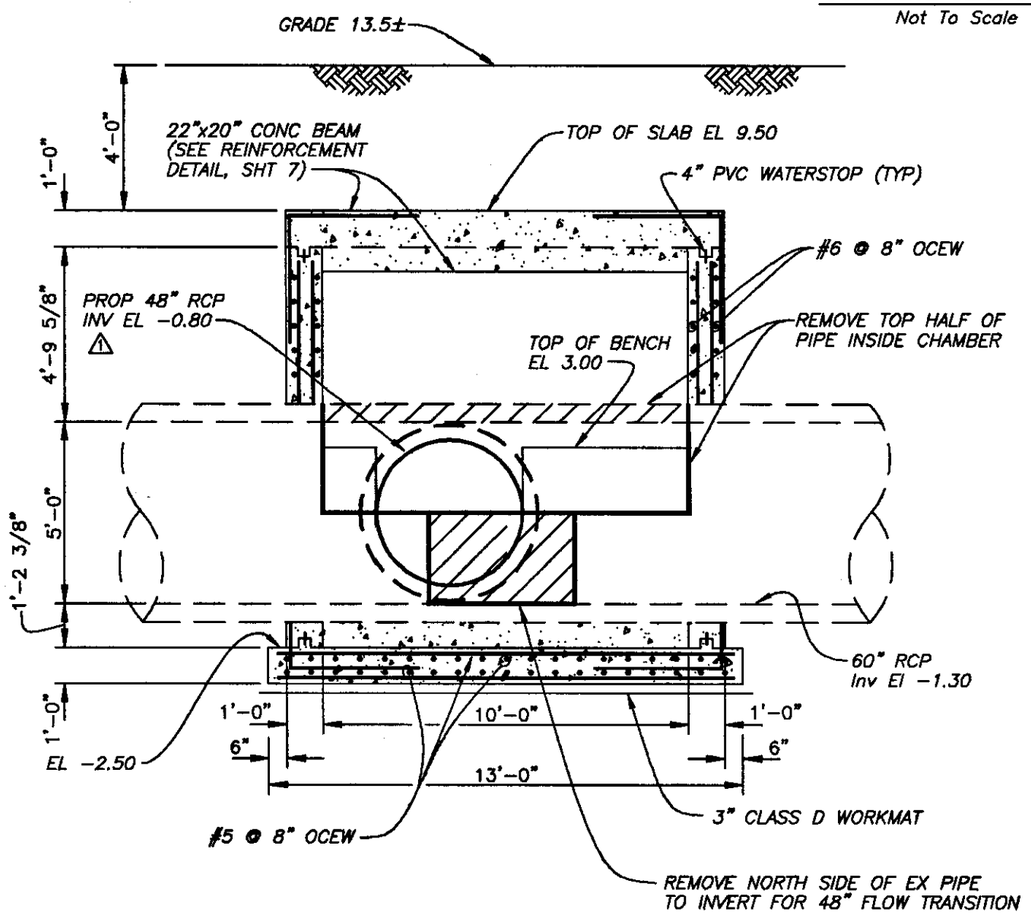


**SECTION A - A**
Scale: 1/4" = 1'

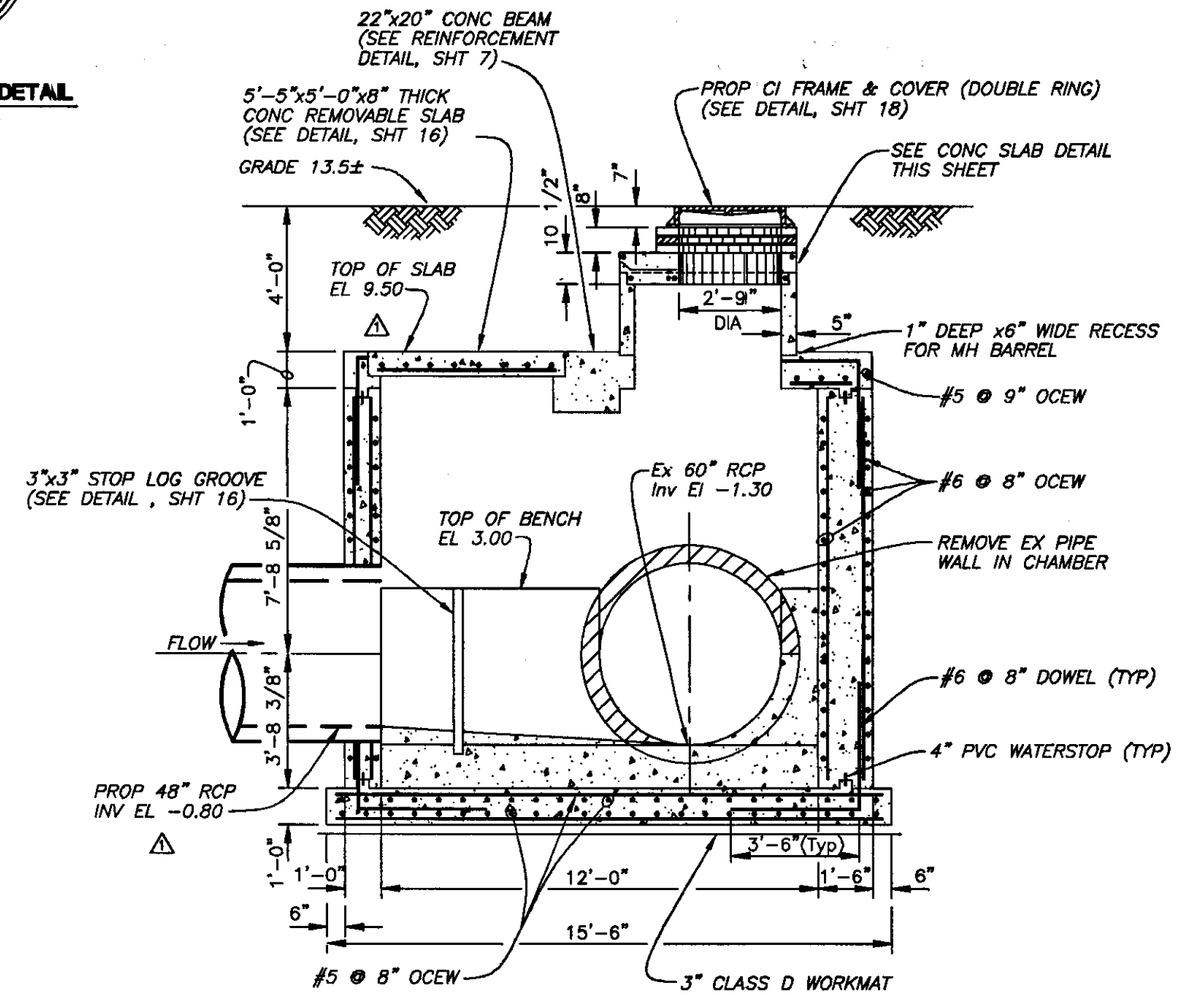


**SECTION B - B**
Scale: 1/4" = 1'

c:\r14\dwg\perry2-detail 1/4"

| | | | | | | | |
|---|---|---|---|---|---|---|---|
| HENRY DORZBACK, P.E. #39449<br>CHIEF ENGINEER<br>DEPARTMENT OF SANITARY SEWERS | RALPH L. MBETCALF II, P.E.<br>DIRECTOR<br>DEPARTMENT T OF SANITARY SEWERS | DES: JF<br>DRN: BK<br>CKD:<br>DATE: | No. | DATE | REVISIONS | CITY of TAMPA<br>DEPARTMENT OF SANITARY SEWERS | HILLSBOROUGH RIVER - PERRY AVENUE<br>CROSSING REHABILITATION<br>PROPOSED JUNICTION CHAMBER SOUTH SIDE | W.O. 4736<br>SHEET<br>8<br>OF 18 |
| | | | 1 | 6/22/98 | REVISED TYPE OF PIPE, REMOVED REBAR | | | |
| | | | 2 | | | | | |
| | | | 3 | | | | | |

B7-24

**B007-024**

R14

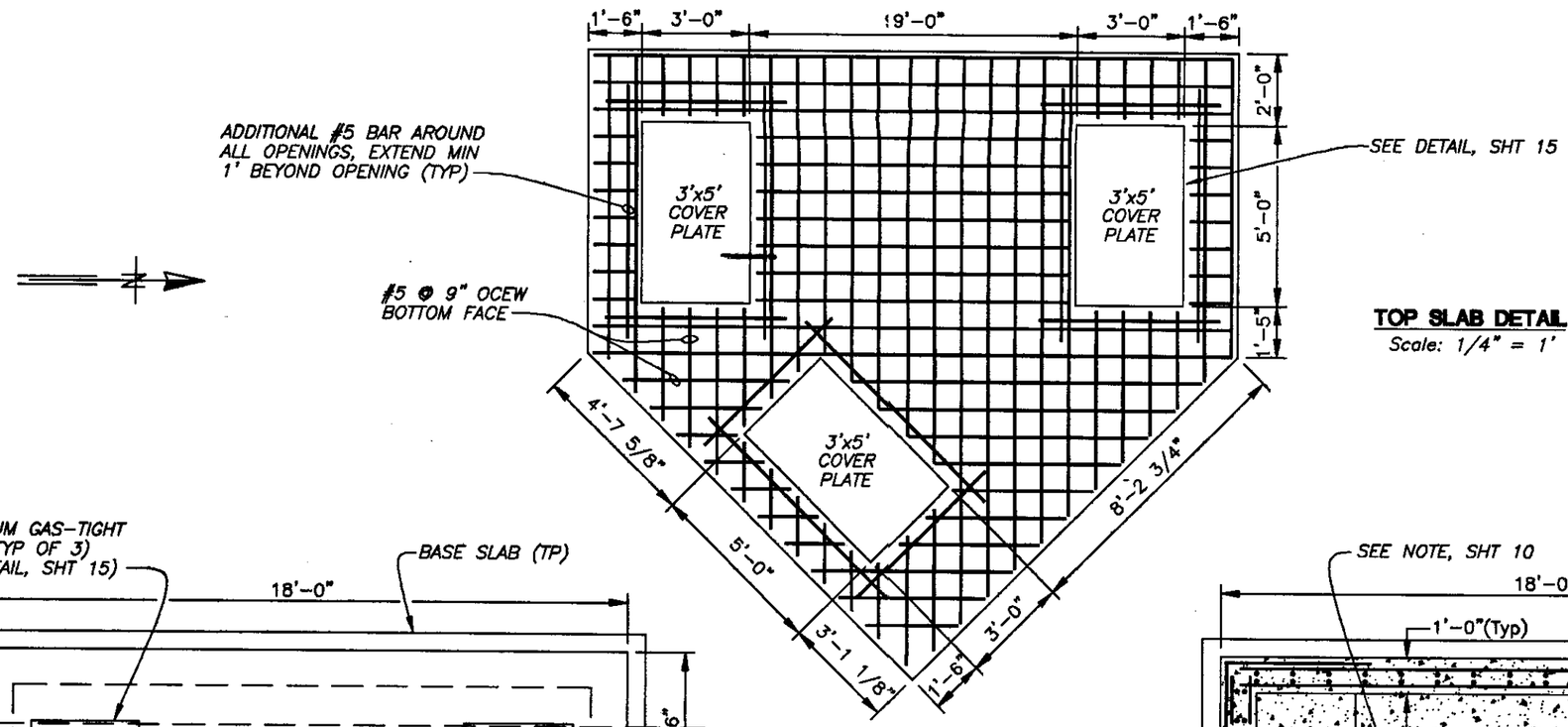


NOTE
IF AN ALTERNATE COVER PLATE IS PROPOSED, IT SHALL BE GASTIGHT AND RATED FOR H-20 LOADING.
1

**TOP SLAB DETAIL**
Scale: 1/4" = 1'

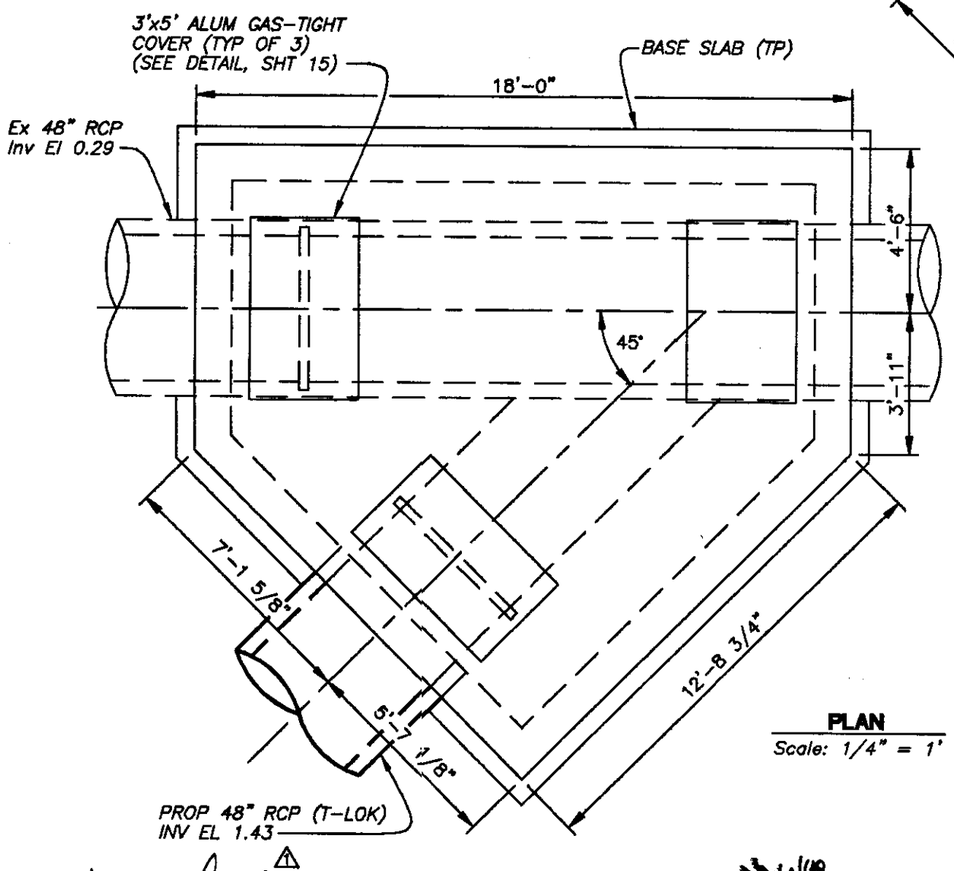


**PLAN**
Scale: 1/4" = 1'

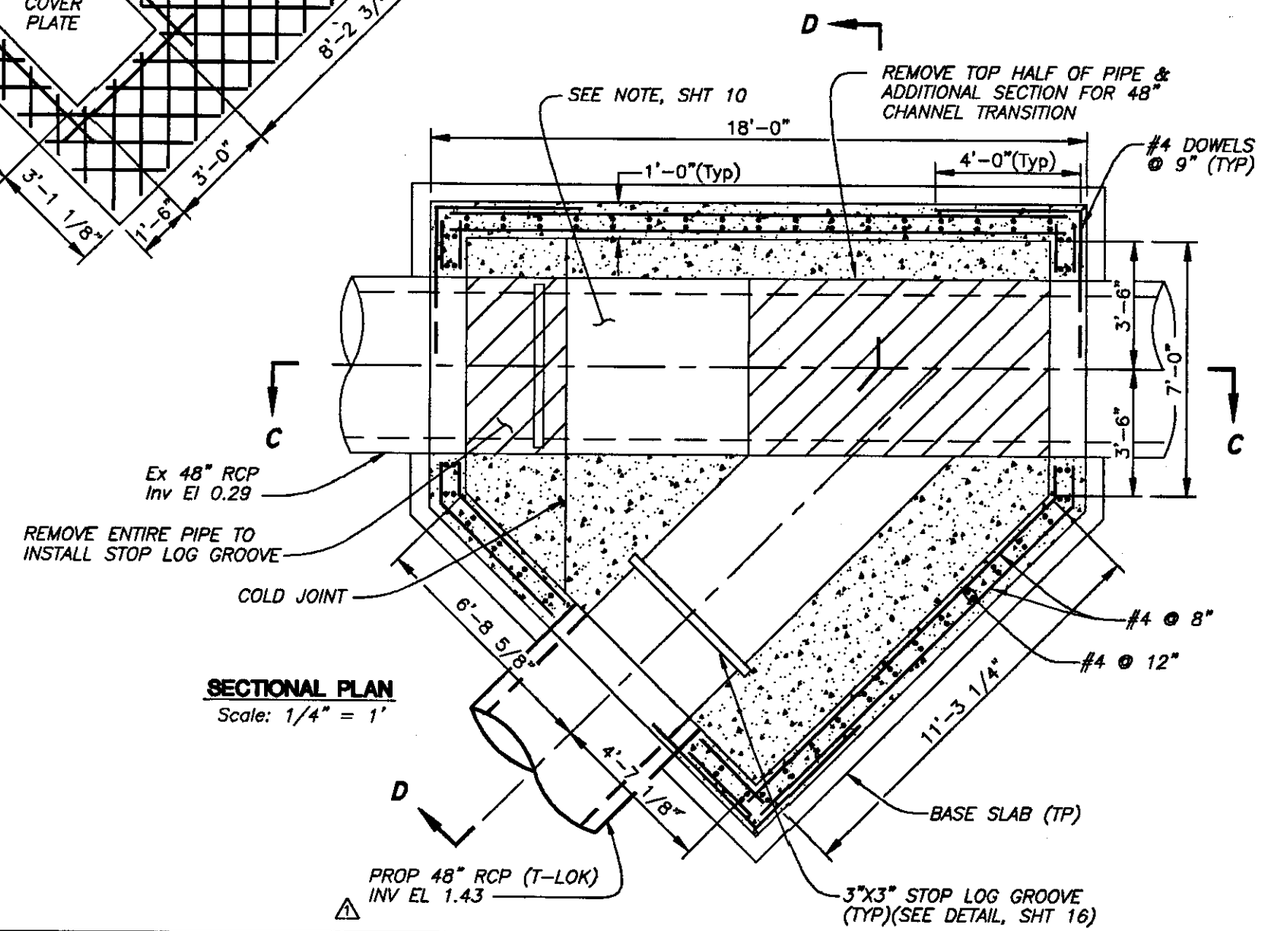


**SECTIONAL PLAN**
Scale: 1/4" = 1'

c:\r14\dwg\perry2-detail 1/4"

| | | | | | | |
|---|---|---|---|---|---|---|
| HENRY DORZBACK, P.E. #39449<br>CHIEF ENGINEER<br>DEPARTMENT OF SANITARY SEWERS | RALPH L. MIETCALF II, P.E.<br>DIRECTOR<br>DEPARTMENT OF SANITARY SEWERS | DES: JF<br>DRN: BK<br>CKD:<br>DATE: 6/98 | No. / DATE / REVISIONS<br>1 / 6/22/98 / REVISED TYPE OF PIPE & ADDED NOTE<br>2<br>3 | CITY of TAMPA<br>DEPARTMENT OF SANITARY SEWERS | HILLSBOROUGH RIVER - PERRY AVENUE CROSSING REHABILITATION<br>PROPOSED DIVERSION STRUCTURE (NORTH SIDE) | W.O. 4736<br>SHEET 9 OF 18 |

B007-025

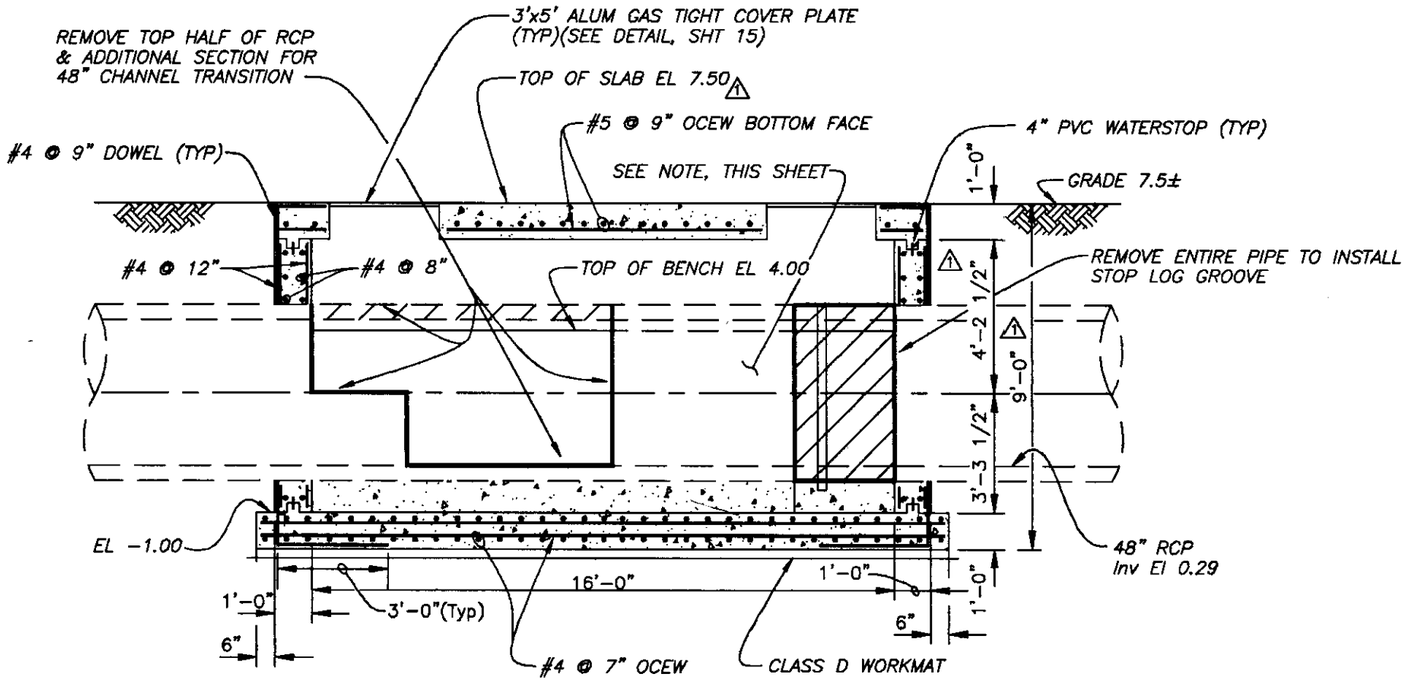


NOTE:

CONTRACTOR SHALL UTILIZE AN INFLATABLE PLUG FOR DIVERSION. AN EXISTING PIPE SECTION SHALL BE KEPT INTACT INSIDE STRUCTURE FOR PLUG INSTALLATION. TOP HALF OF PIPE SHALL BE REMOVED AFTER PLUG REMOVAL. SUBMIT SHOP DRAWING FOR APPROVAL.

**SECTION C-C**
Scale: 1/4" = 1'

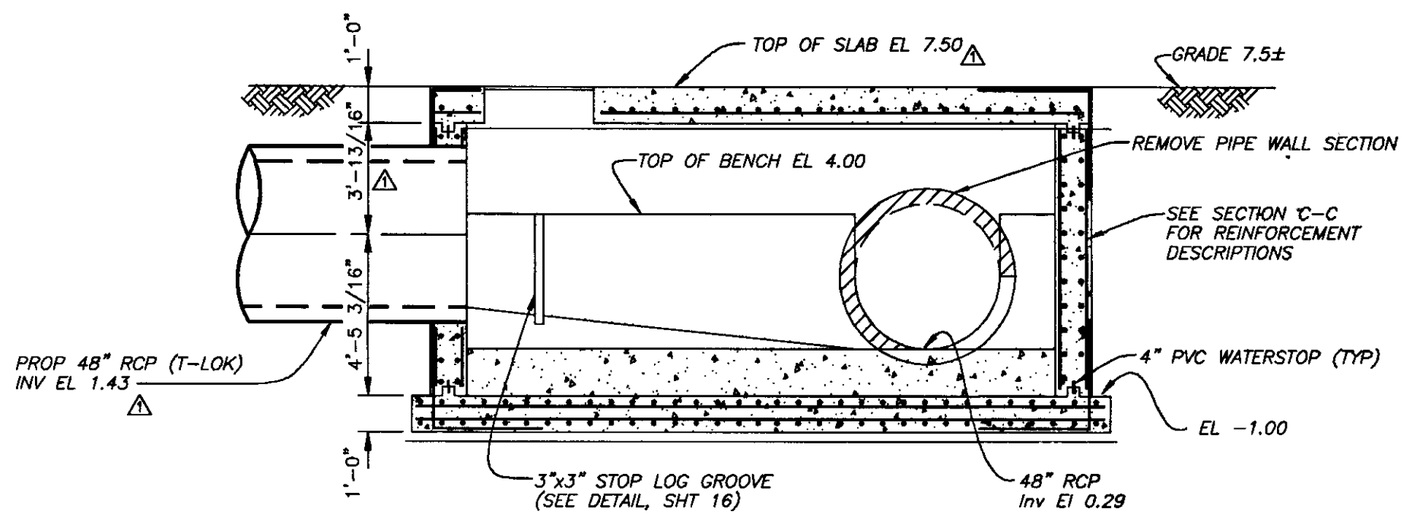


**SECTION D-D**
Scale: 1/4" = 1'

| | | | | | | |
|---|---|---|---|---|---|---|
| HENRY DORZBACK, P.E. #39449<br>CHIEF ENGINEER<br>DEPARTMENT OF SANITARY SEWERS | RALPH L. METCALF II, P.E.<br>DIRECTOR<br>DEPARTMENT OF SANITARY SEWERS | DES: JF<br>DRN: BK<br>CKD: DK<br>DATE: 4/98 | No. / DATE / REVISIONS<br>1 / 6/22/98 / REVISED TYPE OF PIPE, LOWERED CHAMBER TOP & ADJUSTED DIMENSIONS<br>2<br>3 | CITY of TAMPA<br>DEPARTMENT OF SANITARY SEWERS | HILLSBOROUGH RIVER - PERRY AVENUE CROSSING REHABILITATION<br>PROPOSED DIVERSION STRUCTURE (NORTH SIDE) | W.O. 4736<br>SHEET 10 OF 19 |

R14

c:\r14\dwg\perry2-detail 1/4"

B007-026

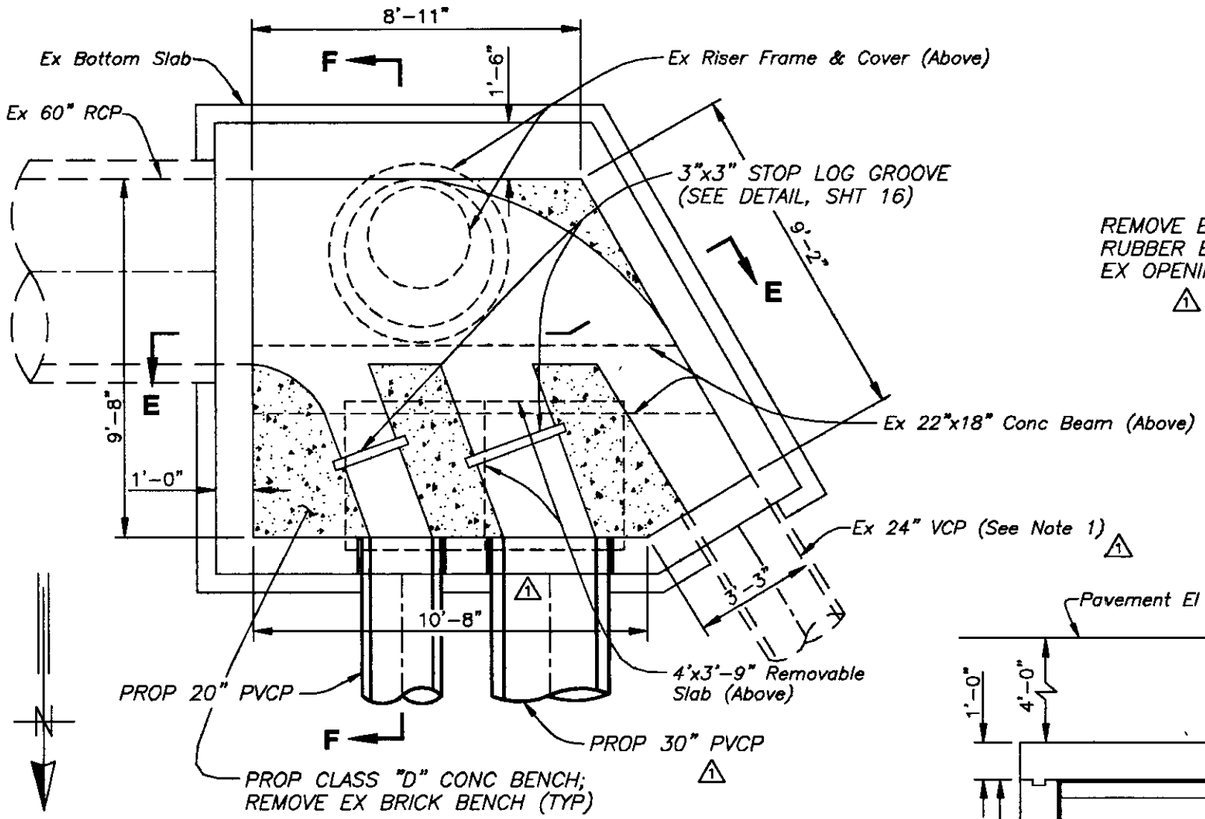


## SECTIONAL PLAN

Scale: 1/4" = 1'

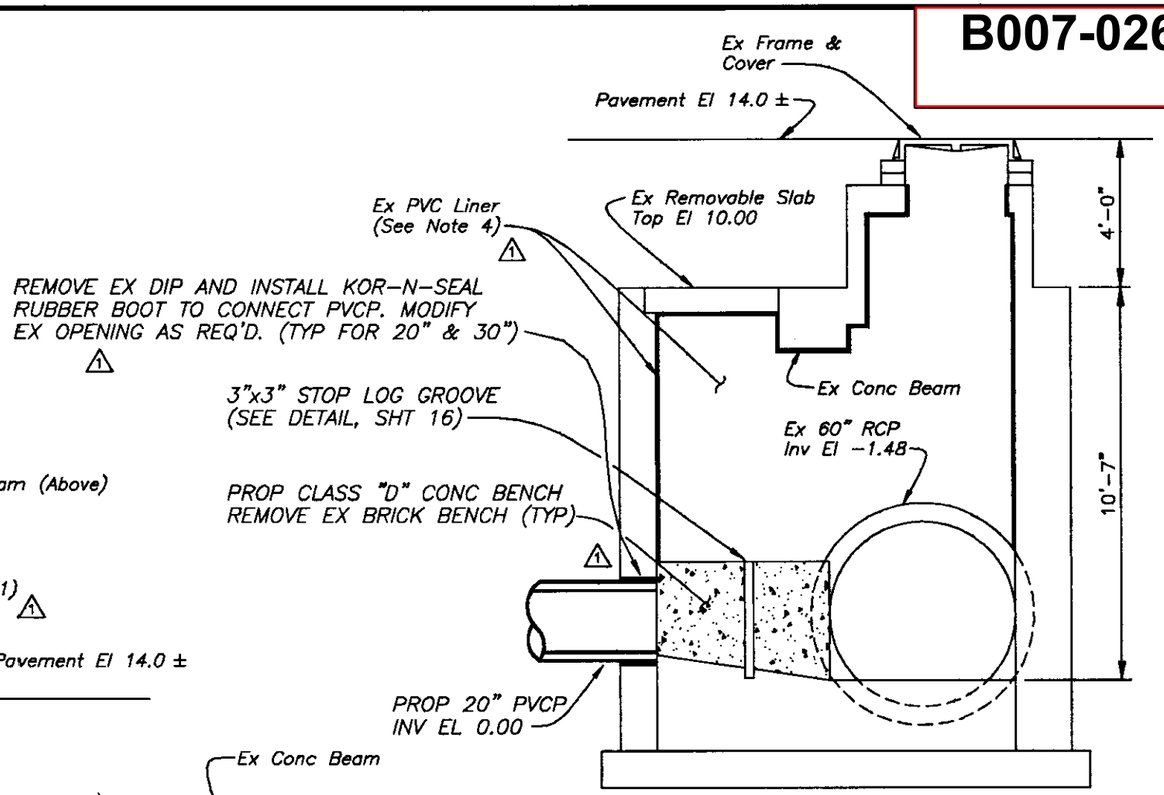


## SECTION F-F

Scale: 1/4" = 1'

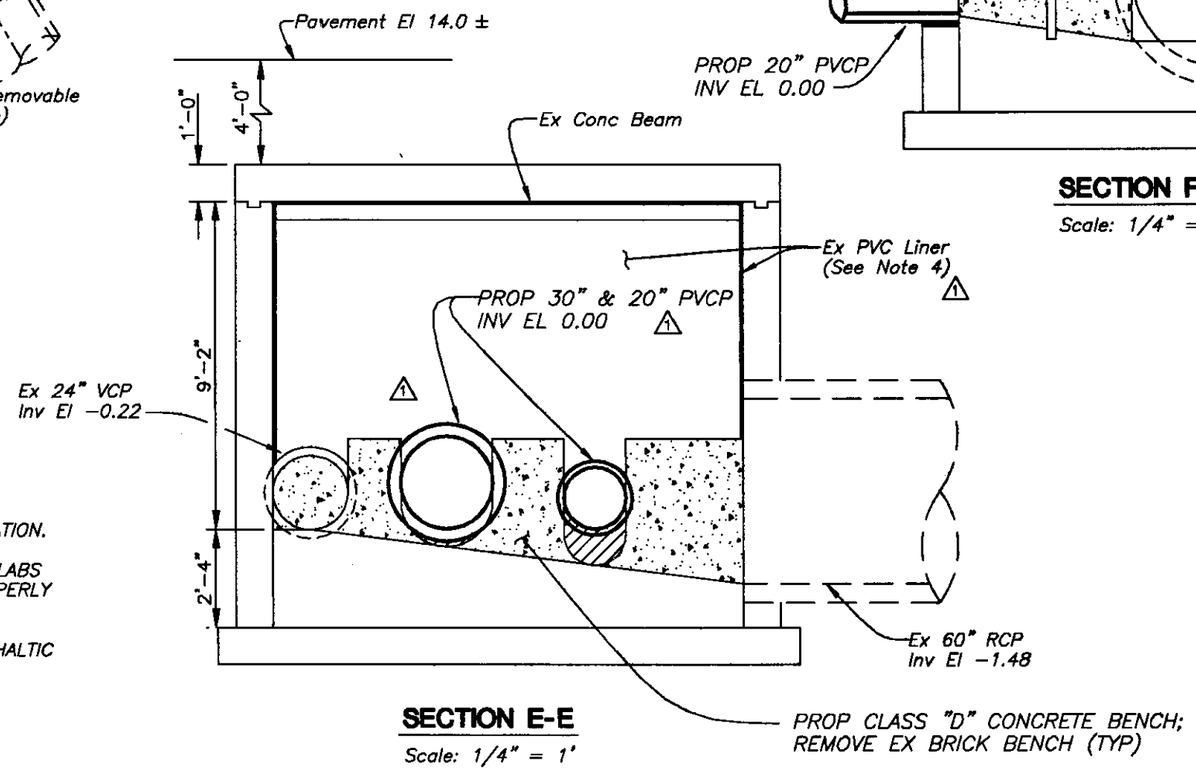


## SECTION E-E

Scale: 1/4" = 1'

NOTES:

1. FLOW IN THE EX 24" VCP SHALL BE BYPASSED. THE COST OF BYPASS SHALL BE INCLUDED IN THE LUMP SUM COST OF THE JUNCTION CHAMBER REHABILITATION.
2. CONTRACTOR SHALL EXCAVATE AND REMOVE EXISTING REMOVABLE CONCRETE SLABS IN ORDER TO REHABILITATE THE STRUCTURE. CONCRETE SLABS SHALL BE PROPERLY REINSTALLED AND SEALED UPON COMPLETION.
3. PAVEMENT RESTORATION SHALL CONSIST OF 8" BASE AND 2" TYPE S-1 ASPHALTIC CONCRETE SURFACE.
4. CONTRACTOR SHALL INSPECT CONDITION OF EX PVC LINER AND REPLACE ALL DEFECTIVE SECTIONS (SEE SHEET 17 FOR DETAILS).

| | | | | | | |
|---|---|---|---|---|---|---|
| HENRY DORZBACK, P.E. #39449<br>CHIEF ENGINEER<br>DEPARTMENT OF SANITARY SEWERS | RALPH L. METCALF II, P.E.<br>DIRECTOR<br>DEPARTMENT OF SANITARY SEWERS | DES: JF<br>DRN: BK<br>CKD:<br>DATE: | No. / DATE<br>1 / 6/23/98<br>2<br>3 | REVISIONS<br>REV PIPE SIZE & ADDED RUBBER SEAL & NOTE | CITY of TAMPA<br>DEPARTMENT OF SANITARY SEWERS | HILLSBOROUGH RIVER - PERRY AVENUE CROSSING REHABILITATION<br>ACTIVE JUNCTION CHAMBER REHAB DETAIL | W.O. 4736<br>SHEET 11 OF 18 |

R14

c:\r14\dwg\ps\perry-dt 1/4"

B007-027

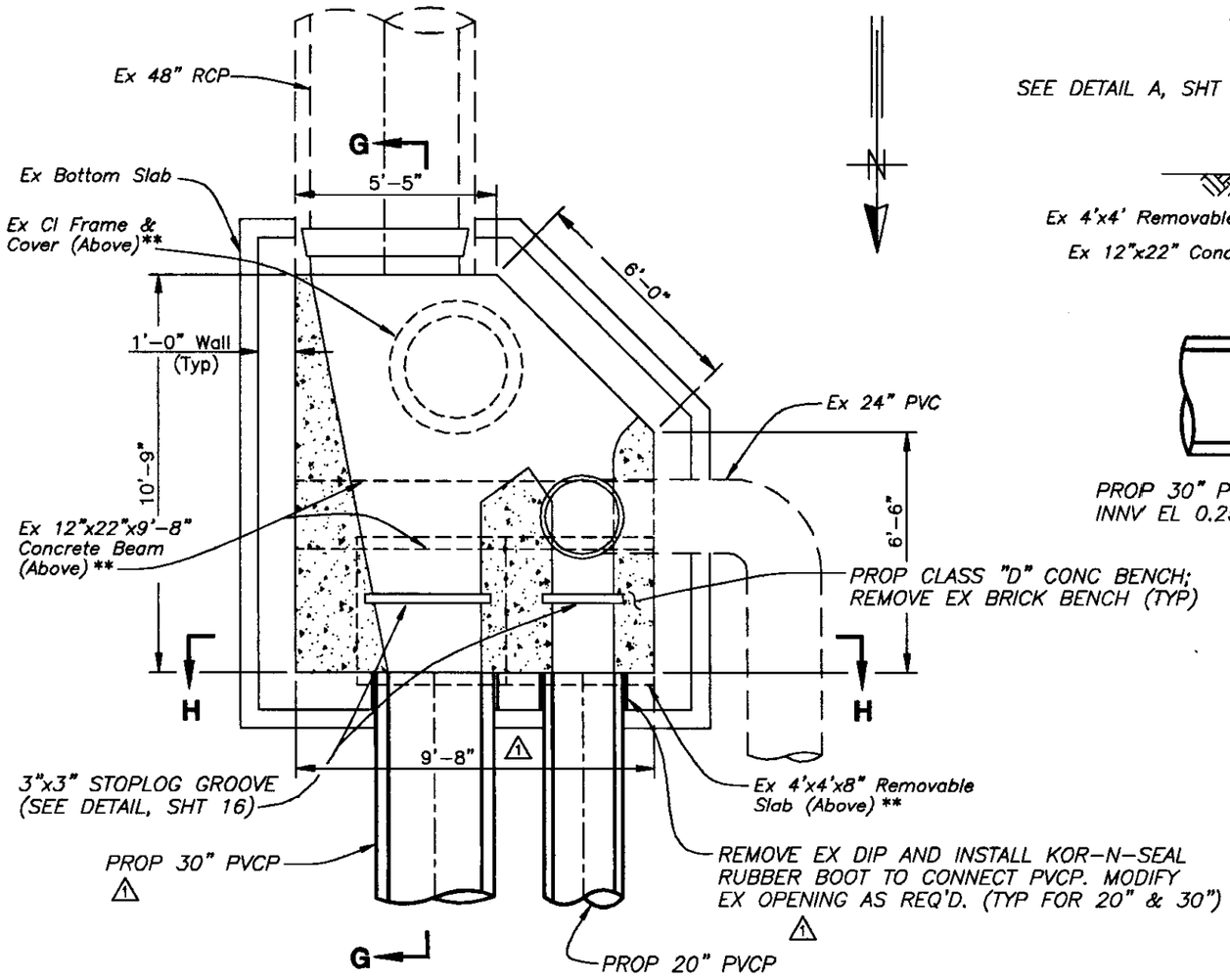


## SECTIONAL PLAN

Scale: 1/4" = 1'

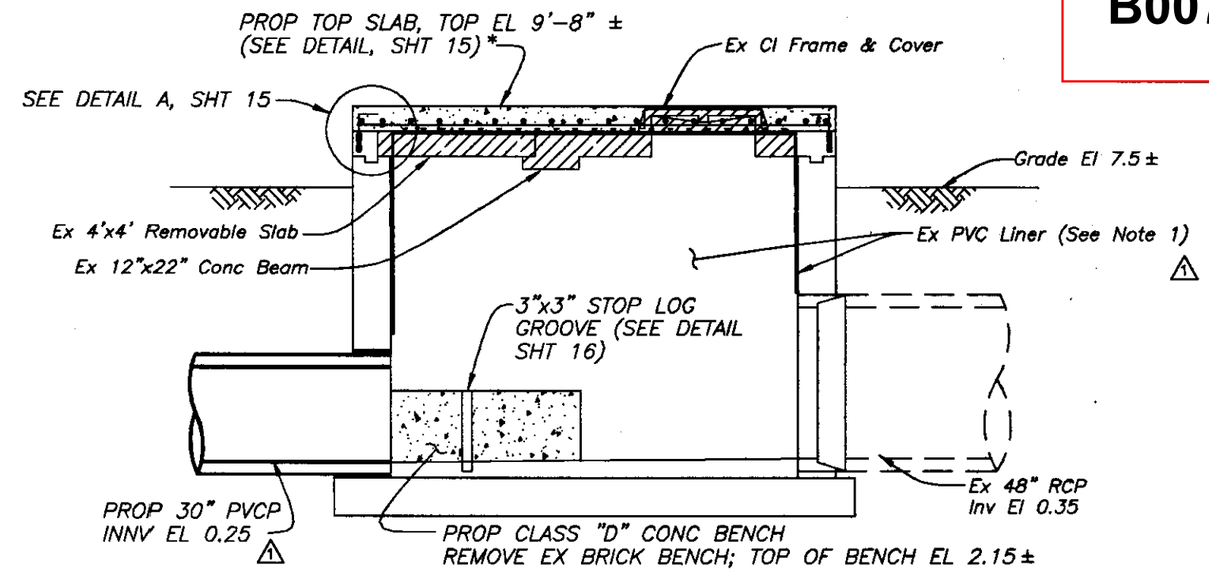


## SECTION G-G

Scale: 1/4" = 1'

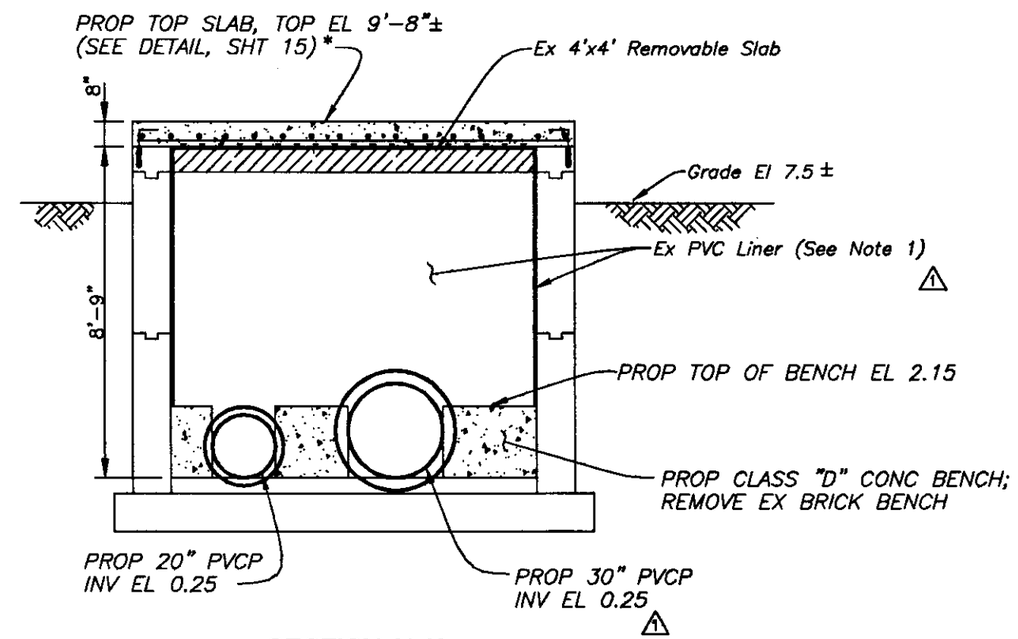


## SECTION H-H

Scale: 1/4" = 1'

NOTES:

1. CONTRACTOR SHALL INSPECT CONDITION OF EX PVC LINER AND REPLACE ALL DEFECTIVE SECTIONS. (SEE SHEET 17 FOR DETAILS)

* PROP GAS-TIGHT ALUM COVER PLATES ARE NOT SHOWN. REFER TO DETAIL FOR PLACEMENT LOCATIONS ON SHEET 15.

** ITEMS TO BE REMOVED ALONG WITH TOP SLAB REMOVAL.

HATCHING INDICATES REMOVAL OF EX TOP SLAB, BEAM, REMOVABLE SLABS, AND CI FRAME & COVER.

| | | | | | | |
|---|---|---|---|---|---|---|
| HENRY DORZBACK, P.E. #39449<br>CHIEF ENGINEER<br>DEPARTMENT OF SANITARY SEWERS | RALPH L. METCALF II, P.E.<br>DIRECTOR<br>DEPARTMENT OF SANITARY SEWERS | DES: JF<br>DRN: BK<br>CKD:<br>DATE: | No. / DATE | REVISIONS | CITY of TAMPA<br>DEPARTMENT OF SANITARY SEWERS | HILLSBOROUGH RIVER - PERRY AVENUE CROSSING REHABILITATION<br>ACTIVE INLET REHAB DETAIL |
| | | | 1 / 6/23/98 | REV PIPE SIZE & ADDED RUBBER SEAL & NOTE | | W.O. 4736 |
| | | | 2 | | | SHEET 12 OF 18 |
| | | | 3 | | | |

R14

c:\r14\dwg\ps\perry-dt 1/4"

B007-028

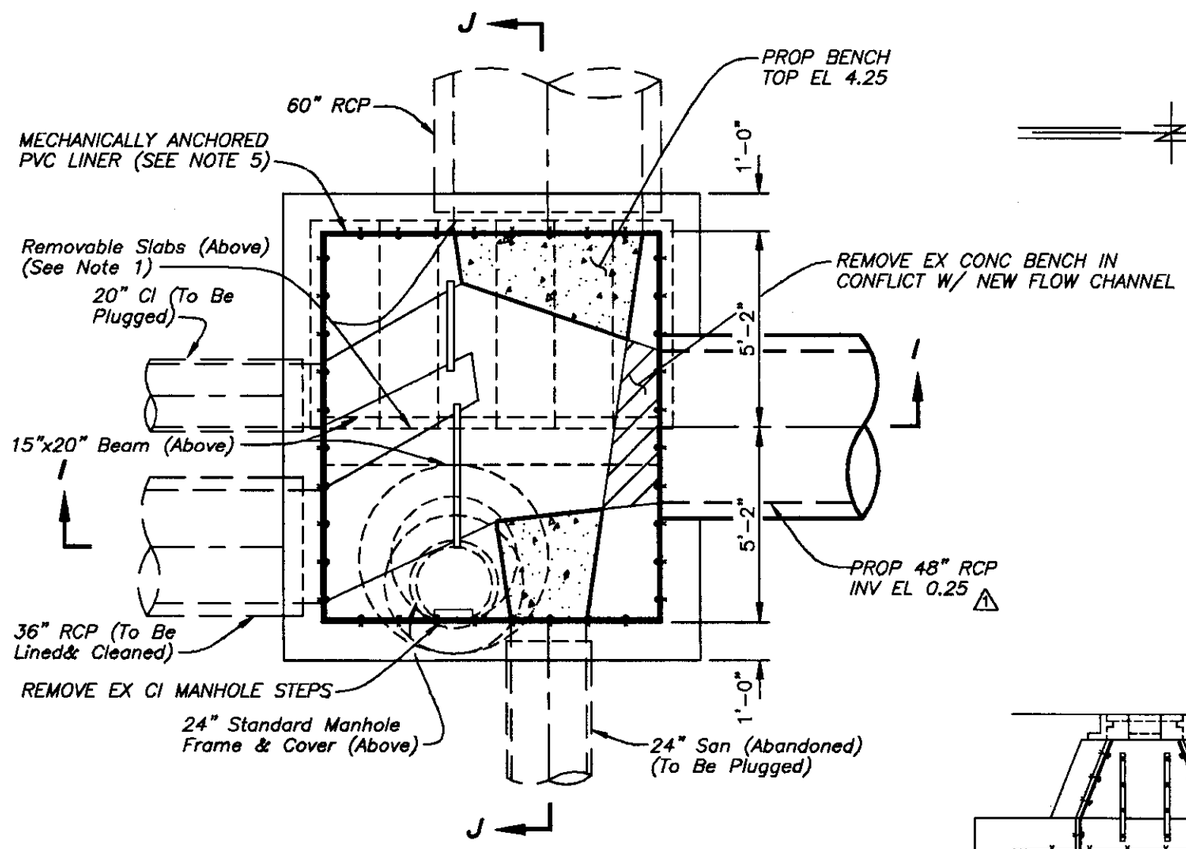


**SECTIONAL PLAN**
Scale: 1/4" = 1'

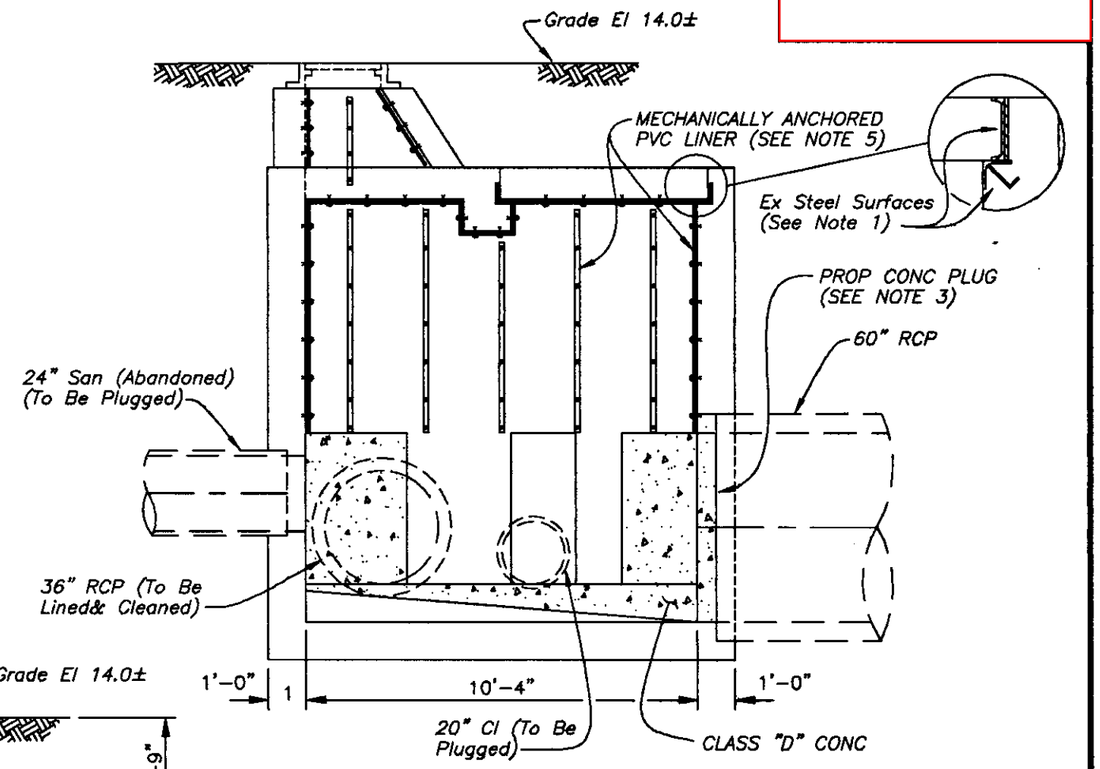


**SECTION J-J**
Scale: 1/4" = 1'

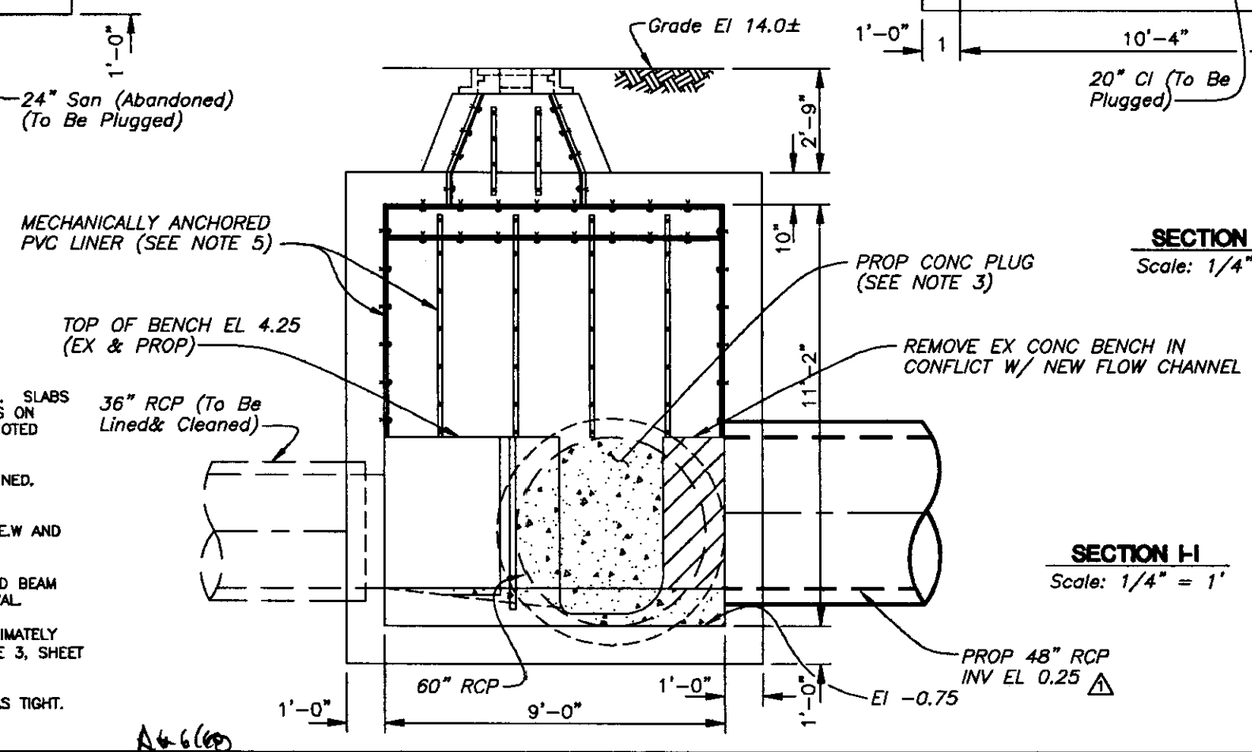


**SECTION I-I**
Scale: 1/4" = 1'

NOTES

1) REMOVABLE SLABS CONSIST OF A CONCRETE SLAB WITH STEEL CHANNEL EDGES. SLABS SHALL BE REMOVED AND ALL STEEL SURFACES, INCLUDING STEEL ANGLE SUPPORTS ON CHAMBER, SHALL BE PRESSURE WASHED TO REMOVE ALL RUST AND PAINTED AS NOTED ON SHEET 2.

2) THE INTERIOR CONCRETE SURFACE OF ALL REMOVABLE SLABS SHALL BE PVC LINED. JOINTS BETWEEN SLABS SHALL BE SEALED AIR TIGHT WITH OAKUM.

3) PERMANENT CONCRETE PLUG SHALL BE REINFORCED WITH #4 BAR AT 12" O.C.E.W AND DOWELED 6" INTO WALL AT 24" SPACING.

4) SECTION OF WALL SHALL BE REMOVED FOR PIPE CONNECTION. TOP SLAB AND BEAM SHALL BE ADEQUETLY SUPPORTED. SUBMIT PIPE CONNECTION DETAIL FOR APPROVAL.

5) EXISTING INTERIOR CONCRETE SURFACES TO BE PVC LINED ARE PITTED APPROXIMATELY 1/4" TO 1/2". SURFACES SHALL BE LEVELED AND LINED AS DESCRIBED ON NOTE 3, SHEET 17 AND SPECIFICATIONS.

6) PROPOSED PVC LINER SHALL TERMINATE AT EL 4.25 AND SHALL BE SEALED GAS TIGHT. SUBMIT SHOP DRAWING FOR REVIEW.

HENRY DORZBACK, P.E. #39449
CHIEF ENGINEER
DEPARTMENT OF SANITARY SEWERS

RALPH L. METCALF II, P.E.
DIRECTOR
DEPARTMENT OF SANITARY SEWERS

DES: JF
DRN: BK
CKD:
DATE:

| No. | DATE | REVISIONS |
|---|---|---|
| 1 | 6/22/98 | REVISED TYPE OF PIPE |
| 2 | | |
| 3 | | |

CITY of TAMPA
DEPARTMENT OF SANITARY SEWERS

HILLSBOROUGH RIVER - PERRY AVENUE
CROSSING REHABILITATION
ABANDONED JUNCTION CHAMBER REHAB
(SOUTH SIDE)

W.O. 4736
SHEET 13 OF 18

R14
1/4"
c:\r14\dwg\perry2-detail

B007-029

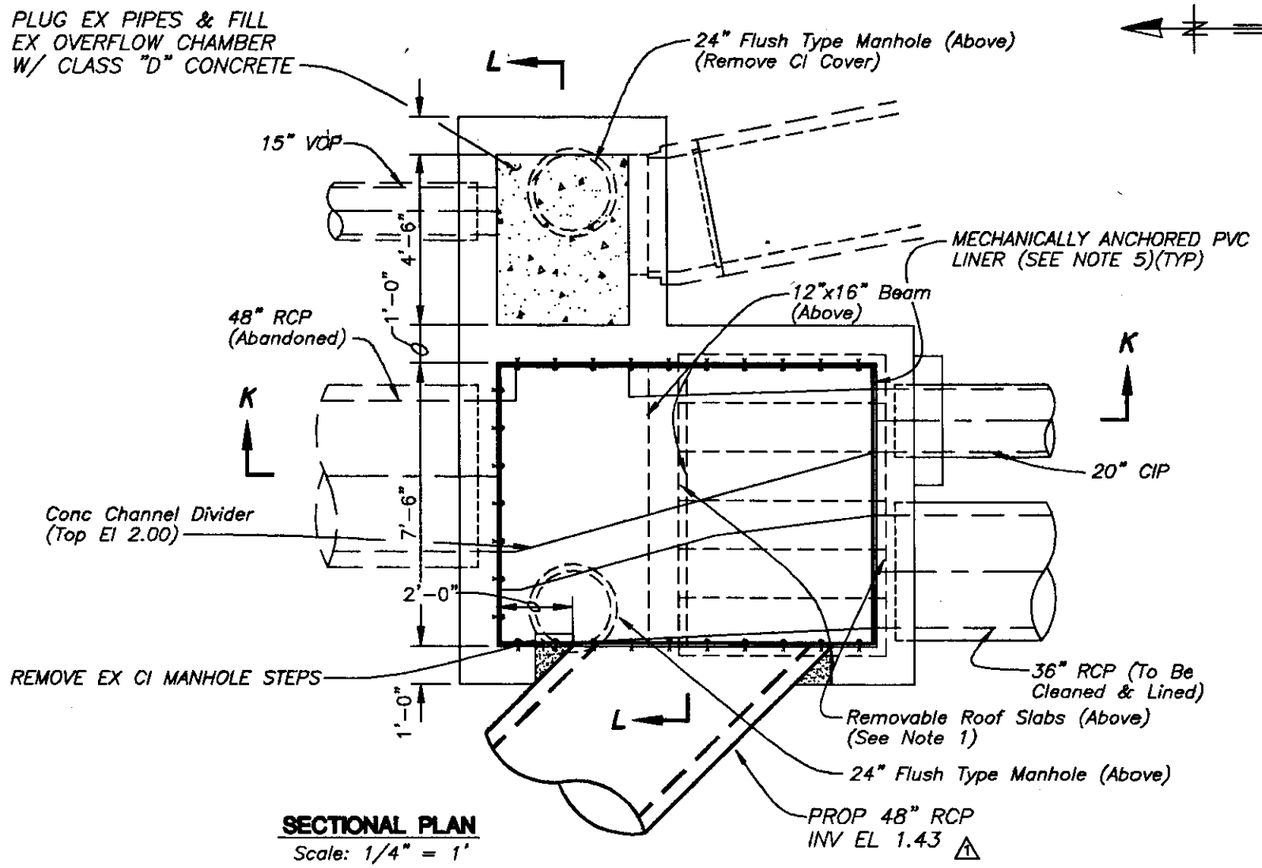


**SECTIONAL PLAN**
Scale: 1/4" = 1'

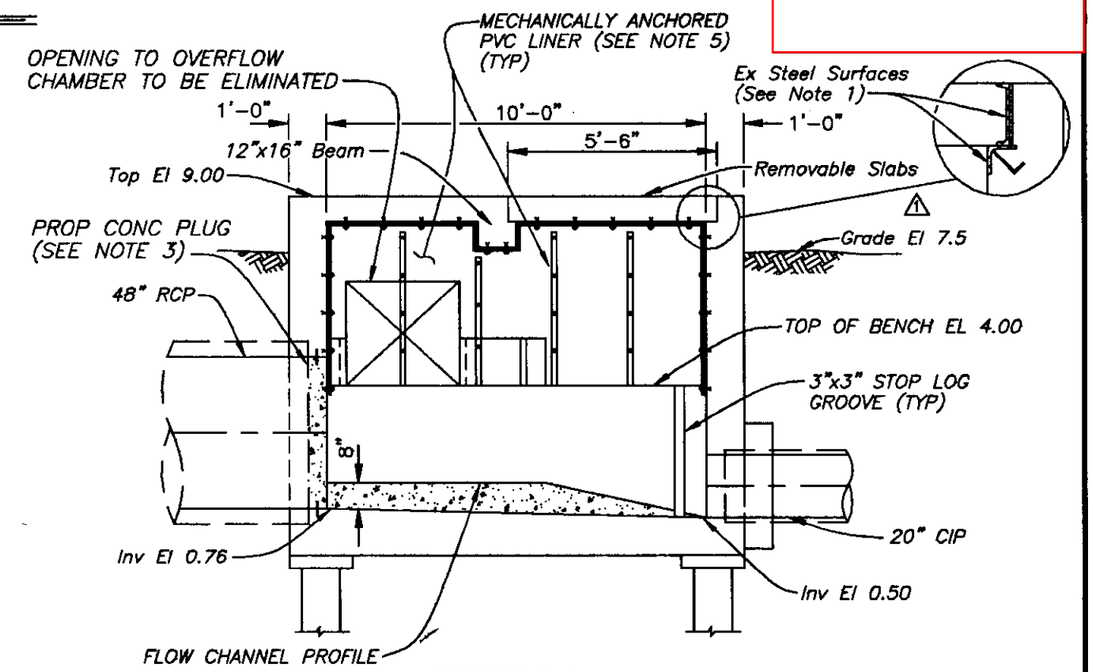


**SECTION A-A**
Scale: 1/4" = 1'

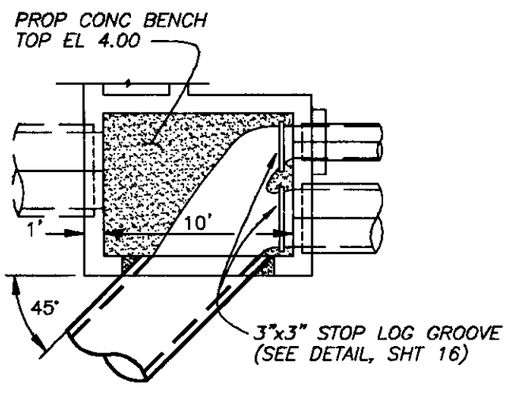


**PROPOSED FLOW CHANNEL DETAIL**
Scale: 1/8" = 1'

NOTES

1) REMOVABLE SLABS CONSIST OF A CONCRETE SLAB WITH STEEL CHANNEL EDGES. SLABS SHALL BE REMOVED AND ALL STEEL SURFACES, INCLUDING STEEL ANGLE SUPPORTS ON CHAMBER, SHALL BE PRESSURE WASHED TO REMOVE ALL RUST AND PAINTED AS NOTED ON SHEET 2.

2) THE INTERIOR CONCRETE SURFACE OF ALL REMOVABLE SLABS SHALL BE PVC LINED. JOINTS BETWEEN SLABS SHALL BE SEALED AIR TIGHT WITH OAKUM.

3) PERMANENT CONCRETE PLUG SHALL BE REINFORCED WITH #4 BAR AT 12" O.C.E.W AND DOWELED 6" INTO WALL AT 24" SPACING.

4) CONTRACTOR SHALL CONSTRUCT AN OPENING IN THE NORTH WALL OF THE EXISTING INLET CHAMBER TO ACCOMMODATE THE PROPOSED PIPE CONNECTION. THE OPENING SHALL BE CONSTRUCTED IN ACCORDANCE WITH ONE OF THE FOLLOWING METHODS:
   A) PRESERVE A PORTION OF THE WALL ABOVE THE PROPOSED PIPE AS REQUIRED TO SUPPORT THE NORTH EDGE OF THE REMOVABLE SLABS.
   B) REMOVE THE ENTIRE WALL ABOVE THE PROPOSED PIPE AND CONSTRUCT A NEW WALL WITH ADEQUATE STEEL REINFORCING TO SUPPORT THE REMOVABLE CONCRETE SLABS.

THE CONTRACTOR SHALL SELECT AN APPROPRIATE METHOD AND SUBMIT SHOP DRAWINGS DETAILING THE CONNECTION.

5) EXISTING INTERIOR CONCRETE SURFACES TO BE PVC LINED ARE PITTED APPROXIMATELY 1/4" TO 1/2". SURFACES SHALL BE LEVELED AND LINED AS DESCRIBED ON NOTE 3, SHEET 17 AND SPECIFICATIONS.

6) PROPOSED PVC LINER SHALL TERMINATE AT EL. 3.75.

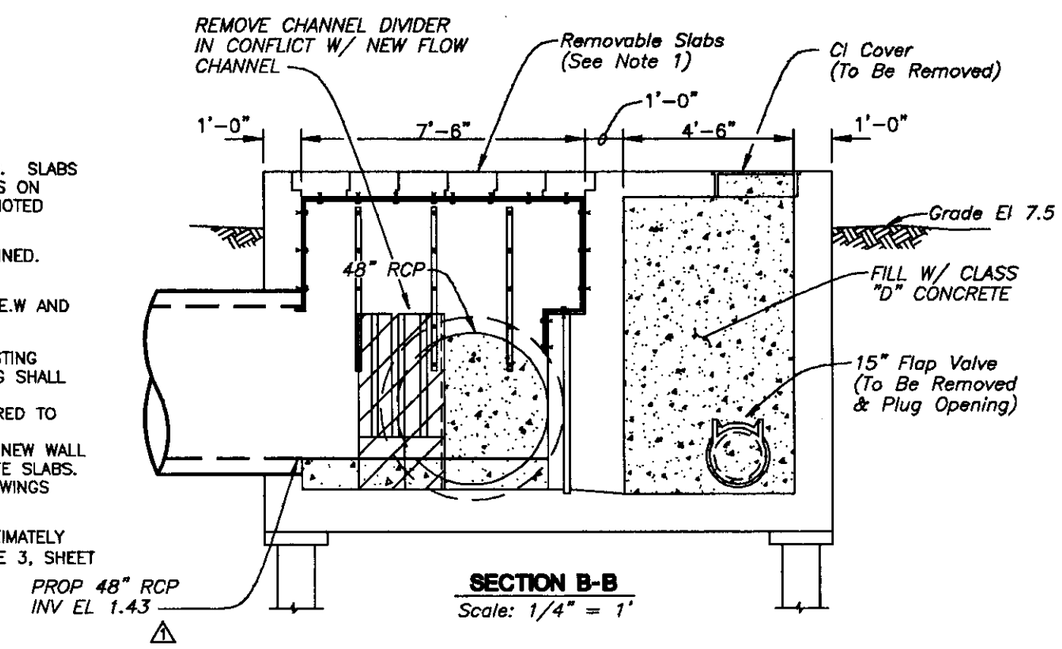


**SECTION B-B**
Scale: 1/4" = 1'

| | | | | | | | |
|---|---|---|---|---|---|---|---|
| HENRY DORZBACK, P.E. #39449<br>CHIEF ENGINEER<br>DEPARTMENT OF SANITARY SEWERS | RALPH L. METCALF II, P.E.<br>DIRECTOR<br>DEPARTMENT OF SANITARY SEWERS | DES: JF<br>DRN: BK<br>CKD:<br>DATE: | No. | DATE | REVISIONS | CITY of TAMPA<br>DEPARTMENT OF SANITARY SEWERS | HILLSBOROUGH RIVER - PERRY AVENUE<br>CROSSING REHABILITATION<br>ABANDONED INLET CHAMBER REHAB (NORTH SIDE) | W.O. 4736<br>SHEET 14 OF 18 |
| | | | 1 | 6/22/98 | REVISED TYPE OF PIPE & NOTES | | | |
| | | | 2 | | | | | |
| | | | 3 | | | | | |

R14

c:\r14\dwg\perry2-detail 1/4"

B007-030

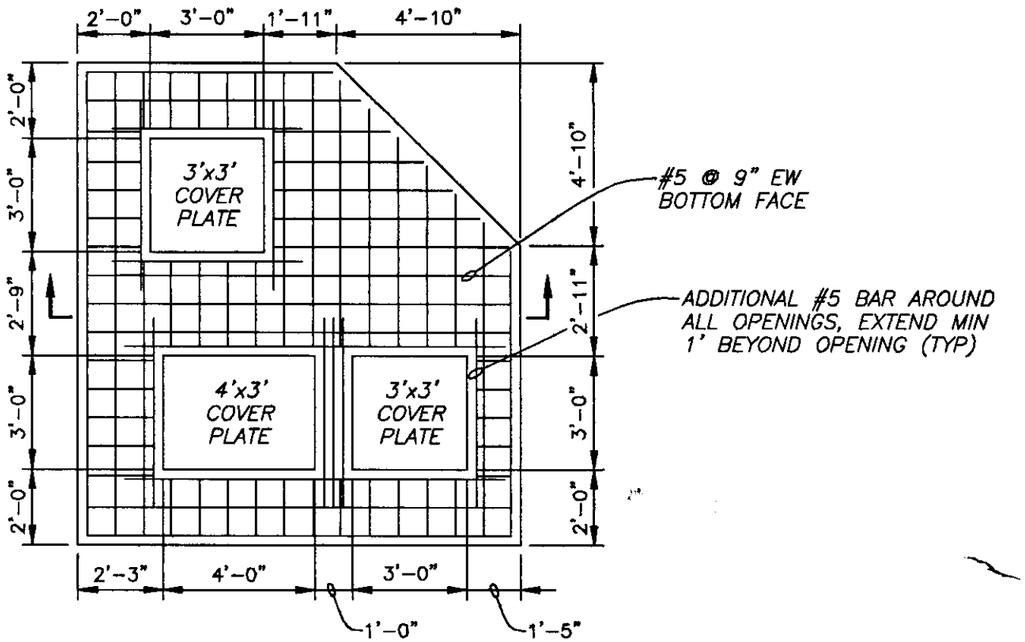


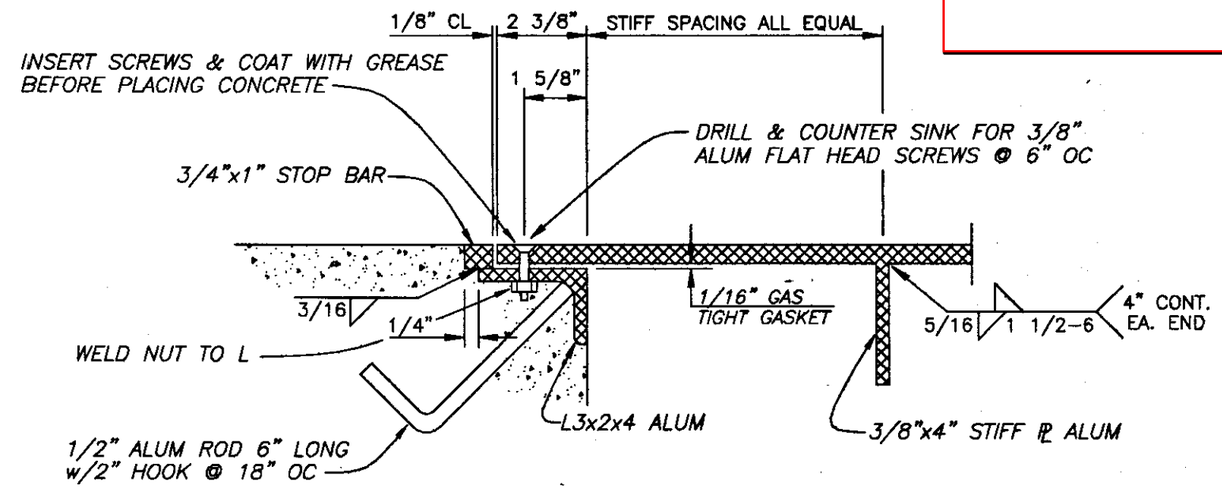


**SECTION**

*Not To Scale*

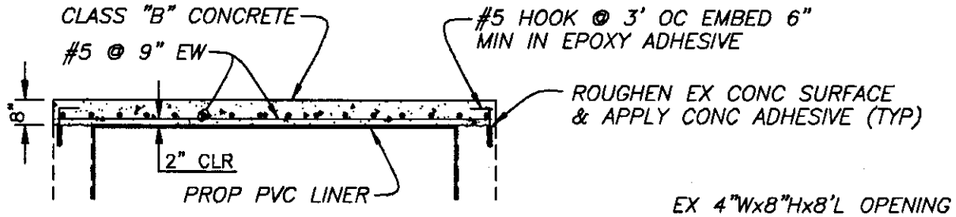


**SECTION**

## ACTIVE INLET CHAMBER TOP SLAB DETAIL

*Scale: 1/4" = 1'*

NOTES:

1. ALL ALUMINUM SHALL BE ALLOY 6061.
2. ALUMINUM SURFACES IN CONTACT WITH CONCRETE SHALL RECEIVE 2 COATS OF ASPHALTIC VARNISH.
3. ALTERNATE ALUMINUM COVER PLATE DESIGN WILL BE CONSIDERED. COVER PLATE SHALL BE GAS TIGHT AND RATED FOR 300 PSF, UNLESS OTHERWISE NOTED. △1
4. EPOXY ADHESIVE SHALL BE BRUTEM 17 (BY MASTER BUILDER'S) OR APPROVED EQUAL.

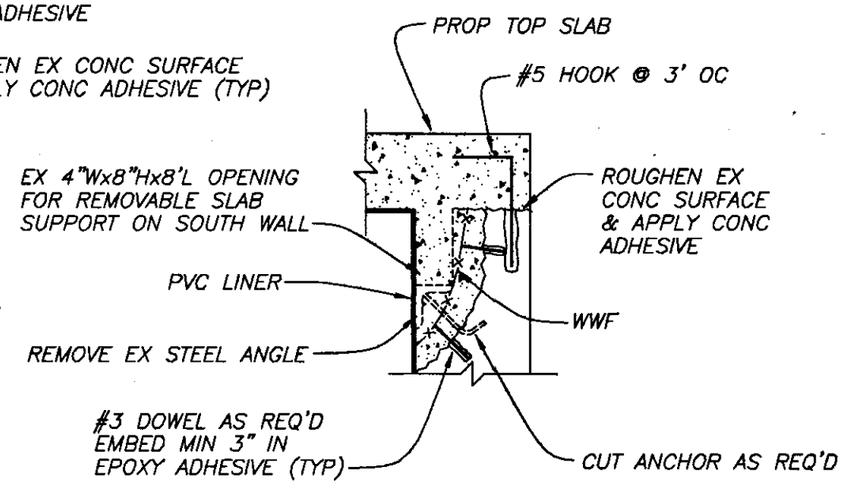


**DETAIL A**
**REMOVAL OF SLAB SUPPORT**

*Not To Scale*

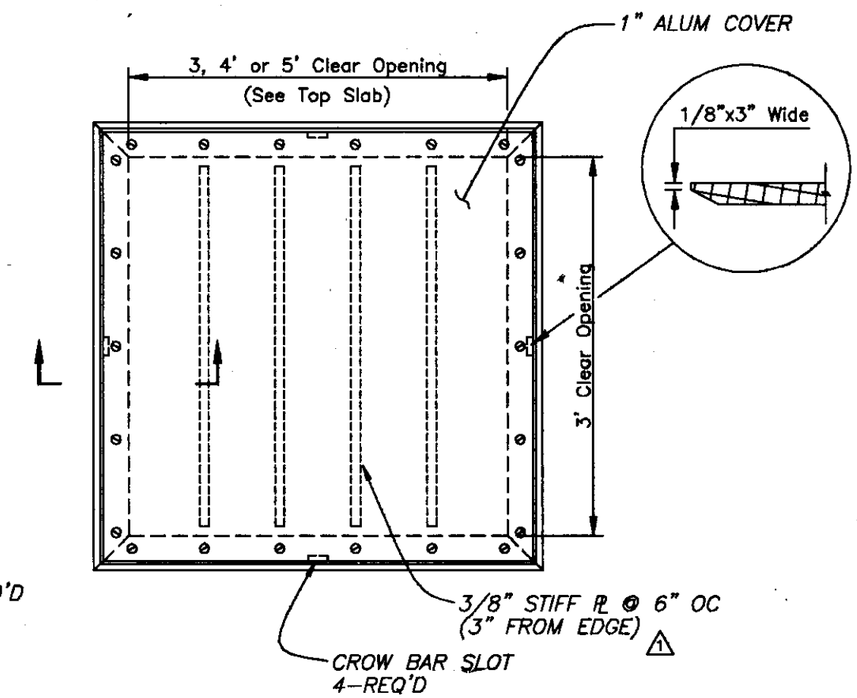


**ALUMINUM GAS-TIGHT COVER PLATE**

*Not To Scale*

| | | | | | | |
|---|---|---|---|---|---|---|
| HENRY DORZBACK, P.E. #39449<br>CHIEF ENGINEER<br>DEPARTMENT OF SANITARY SEWERS | RALPH L. METCALF II, P.E.<br>DIRECTOR<br>DEPARTMENT OF SANITARY SEWERS | DES: JF<br>DRN: BK<br>CKD:<br>DATE: | No. / DATE<br>△1 6/23/98<br>2<br>3 | REVISIONS<br>REVISED NOTES | CITY of TAMPA<br>DEPARTMENT OF SANITARY SEWERS | HILLSBOROUGH RIVER - PERRY AVENUE CROSSING REHABILITATION MISCELLANEOUS DETAILS |

W.O. 4736
SHEET 15 OF 18

c:\r14\dwg\ps\perry-dt 1/4"

B007-031

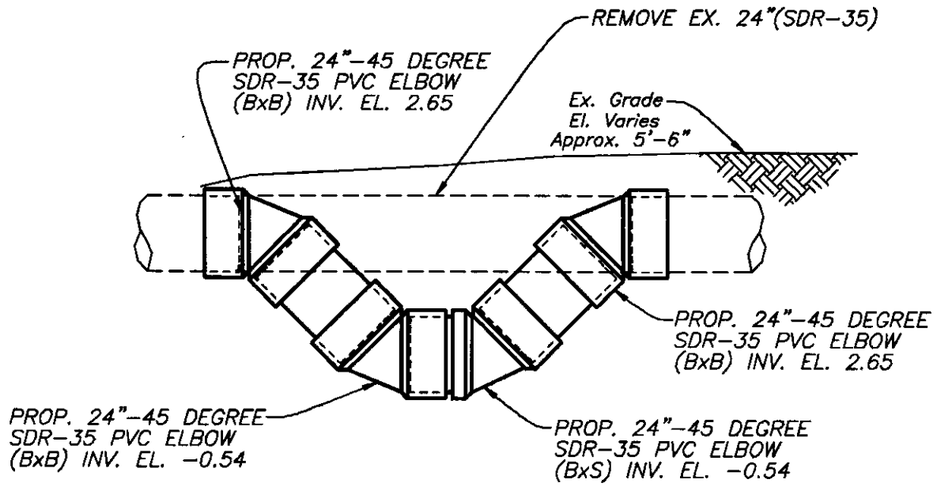


## PVC PIPE OFFSET - DETAIL "C"

Not To Scale

NOTE:

THE CITY WILL PROVIDE 4-45 DEGREE PVC ELBOWS AND PIPE. ADDITIONAL FITTINGS, IF NECESSARY, SHALL BE SUPPLIED BY THE CONTRACTOR. 1

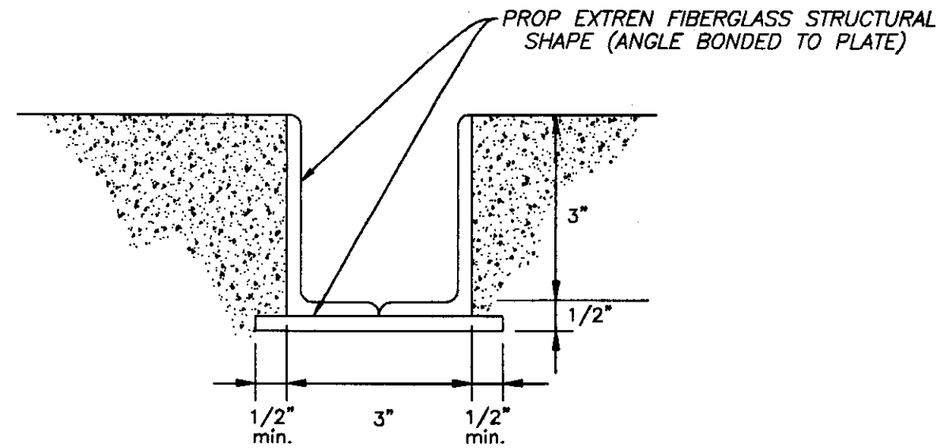


## FIBERGLASS STOP LOG GROOVE - DETAIL "B"

Not To Scale

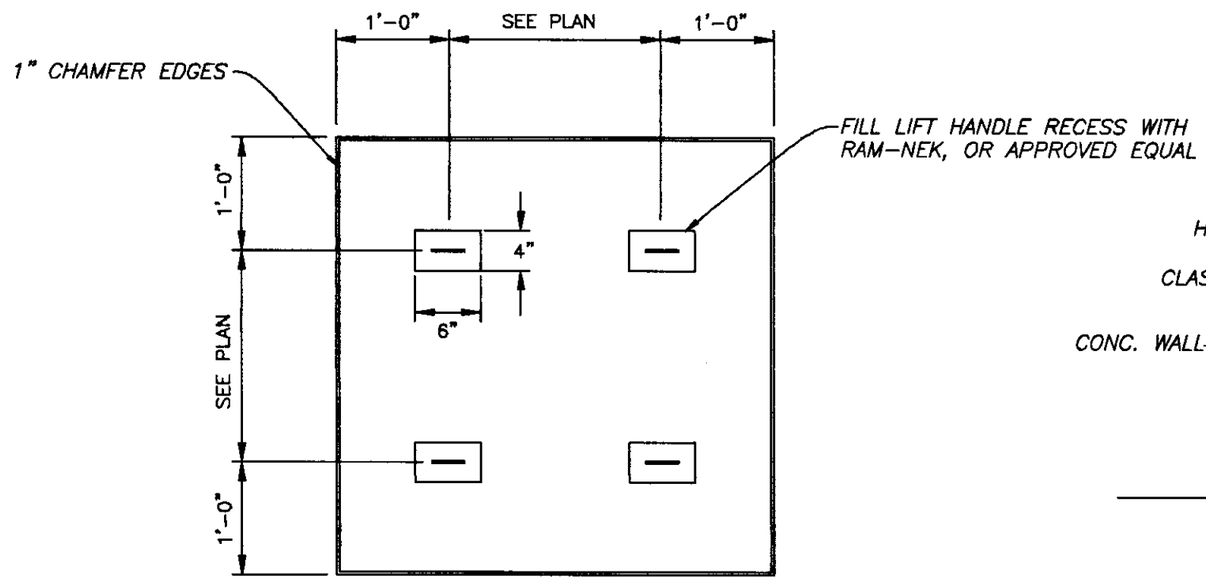


## PLAN

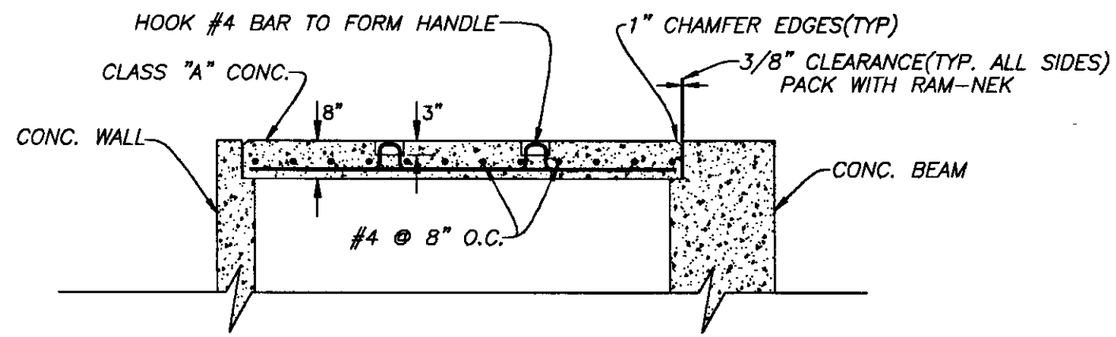


## SECTION

## REMOVEABLE SLAB - DETAIL "A"

Not To Scale

HENRY DORZBACK, P.E. #39449
CHIEF ENGINEER
DEPARTMENT OF SANITARY SEWERS

RALPH L. METCALF II, P.E.
DIRECTOR
DEPARTMENT OF SANITARY SEWERS

DES: JF
DRN: BB
CKD: DV
DATE: 6/1/98

| No. | DATE | REVISIONS |
|---|---|---|
| 1 | 6/23/98 | REVISED NOTE |
| 2 | | |
| 3 | | |

CITY of TAMPA
DEPARTMENT OF SANITARY SEWERS

HILLSBOROUGH RIVER - PERRY AVENUE CROSSING REHABILITATION
MISCELLANEOUS DETAILS

W.O. 4736
SHEET 16 OF 18

R14

1/4"

c:\r14\dwg\ps\perry-dt

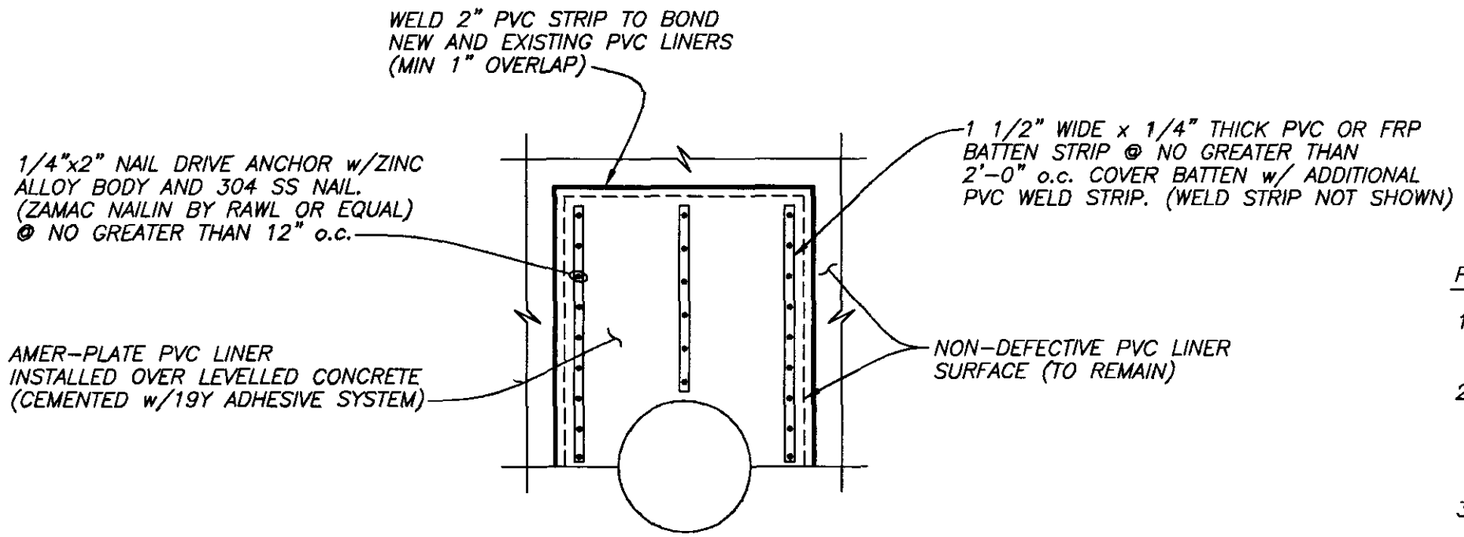


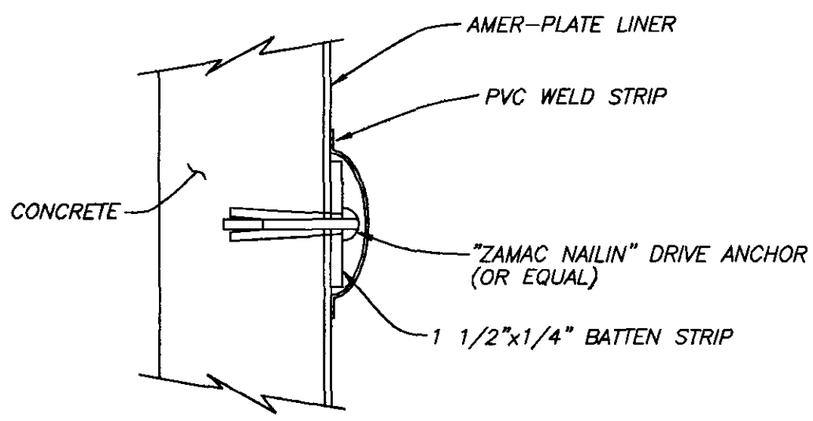


**DETAIL A**

**TYPICAL PVC LINER REPLACEMENT DETAIL**

*Not To Scale*

PVC Liner Replacement Notes:

1. All existing PVC liner surfaces to remain shall be pressure washed to remove all built-up grease and sewage debris.
2. The contractor, in the presence of the engineer, shall throughly inspect the condition of the existing PVC liner inside the junction and inlet chambers. All defective areas discovered shall be removed and replaced.
3. The PVC liner replacement or new installation procedure shall consist of the following:
   a) Remove defective existing PVC liner and all unsound concrete behind the liner.
   b) Level concrete surface with an approved cementitious mortar repair (Sitkatop 123 or approved equal)
   c) Bond PVC liner to concrete surface with the 19Y adhesive system (by Ameron) or approved equal.
   d) Mechanically fasten PVC liner with anchoring system shown on Detail A.
4. Payment for PVC Liner Replacement shall be made at the appropriate contract unit price per square footage and shall not be included in the lump sum cost of the active junction chamber or active inlet chamber rehabilitation.
5. Payment for new PVC Liner installation in abandoned inlet and junction chambers shall be included in the lump sum cost of the appropriate chamber rehabilitation contract item.
6. The proposed PVC liner and associated materials necessary for its replacement shall be installed in strict accordance with manufacturer's recommendations.
7. All PVC liner terminations at corners, intersections, openings, etc. shall be done in accordance with liner manufacturer's recommendations.

| | | | | | | |
|---|---|---|---|---|---|---|
| HENRY DORZBACK, P.E. #39449<br>CHIEF ENGINEER<br>DEPARTMENT OF SANITARY SEWERS | RALPH L. METCALF II, P.E.<br>DIRECTOR<br>DEPARTMENT OF SANITARY SEWERS | DES: JF<br>DRN: BK<br>CKD:<br>DATE: | No. / DATE / REVISIONS<br>1<br>2<br>3 | CITY of TAMPA<br>DEPARTMENT OF SANITARY SEWERS | HILLSBOROUGH RIVER - PERRY AVENUE CROSSING REHABILITATION<br>MISCELLANEOUS PVC LINER DETAILS | W.O. 4736<br>SHEET 17 OF 18 |

R14
c:\r14\dwg\ps\perry-dt 1/4"

B007-033

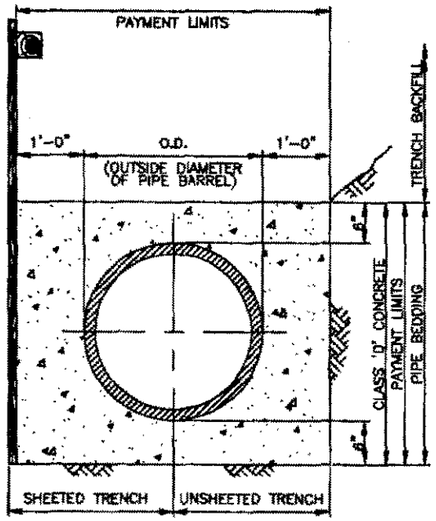


**CONCRETE ENCASEMENT**

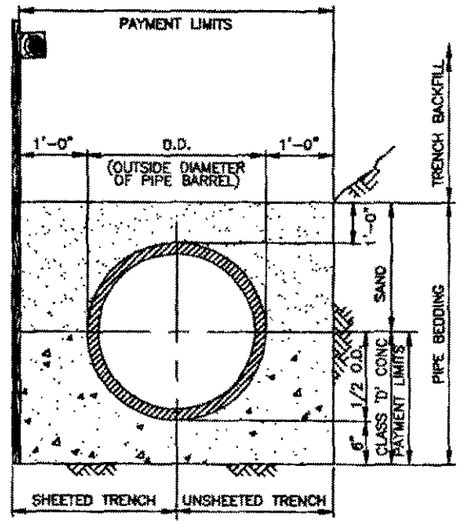


**CLASS A BEDDING (CONCRETE CRADLE)**

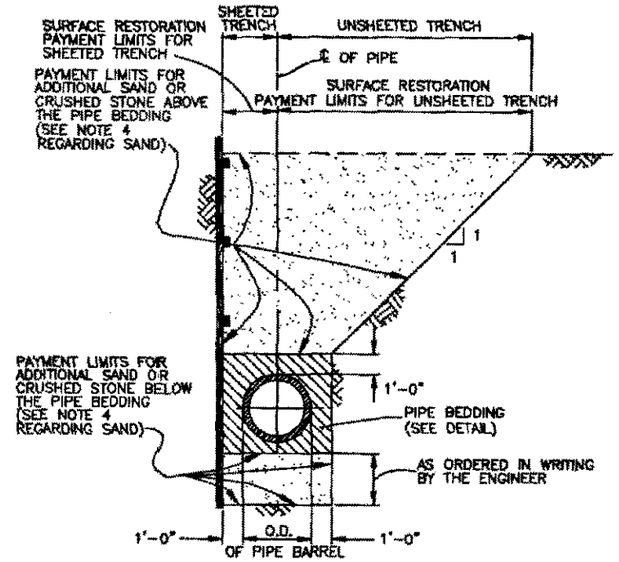


**PAYMENT LIMITS FOR SURFACE RESTORATION AND ADDITIONAL SAND OR CRUSHED STONE FOR TRENCH STABILIZATION**

**NOTES**

1. PAYMENT FOR ADDITIONAL CRUSHED STONE OR CLASS D CONCRETE PIPE BEDDING MATERIALS WILL BE MADE ONLY FOR JPIPE BEDDING NOT SHOWN IN THE PLANS AND ORDERED IN WRITING BY THE ENGINEER.
2. PAYMENT FOR SURFACE RESTORATION WILL MADE FOR THE ACTUAL QUANITIES, AS DETERMINED BY THE ENGINEER, OF SURFACE RESTORED WITHIN THE PAYMENT LIMITS SHOWN.
3. PAYMENT FOR ADDITIONAL SAND OR CRUSHED STONE FOR TRENCH STABILIZATION, ORDERED IN WRITING BY THE ENGINEER, WILL BE MADE FOR THE ACTUAL COMPACTED VOLUME, AS DETERMINED BY THE ENGINEER, OF SAND OR CRUSHED STONE PLACED WITHIN THE PAYMENT LIMITS SHOWN.
4. CONTRACTOR SHALL USE ALL SURPLUS SAND, APPROVED AS SUITABLE, FROM EXCAVATIONS IN THE CONTRACT PRIOR TO SUPPLYING SAND FROM OTHERSOURCES. PAYMENT FOR ADDITIONAL SAND WILL BE MADE ONLY FOR SAND SUPPLIED FROM SOURCES OTHER THAN EXCAVATIONS IN THIS CONTRACT. SEE SPECIFICATIONS FOR MATERIALS REQUIREMENTS.

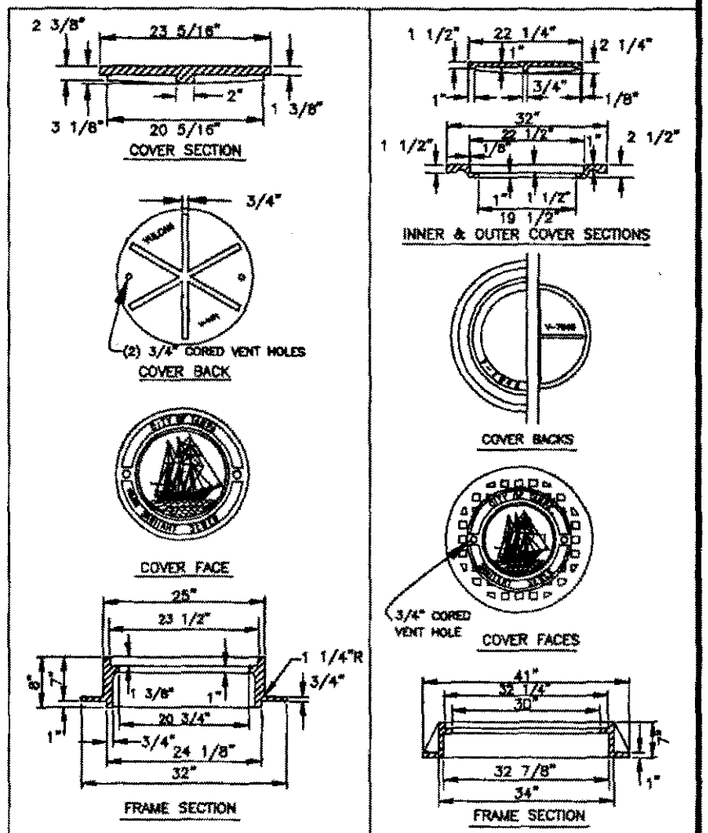


FOR MH'S OF SEWERS 24" OR LESS IN DIAMETER: VULCAN FOUNDRY NO. V-1471, U.S. FOUNDRY NO. 575-AT, OR EQUAL

FOR MH'S OF SEWERS 27" OR GREATER IN DIAMETER: VULCAN FOUNDRY NO. V-7045, U.S. FOUNDRY NO. 230-AB-M, OR EQUAL

**HEAVY DUTY CAST IRON MANHOLE FRAME & COVER DETAILS**

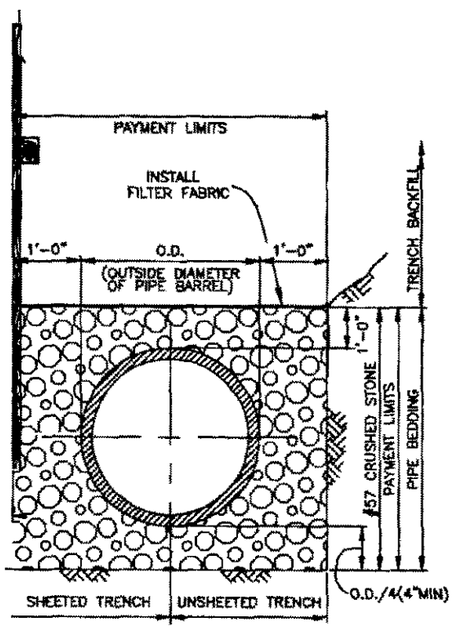


**CLASS B-1 BEDDING**

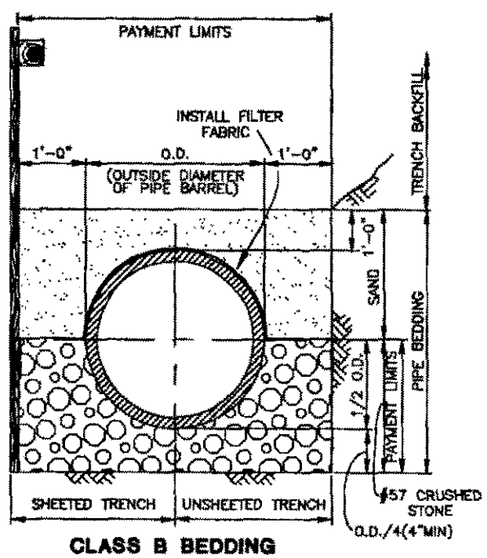


**CLASS B BEDDING**

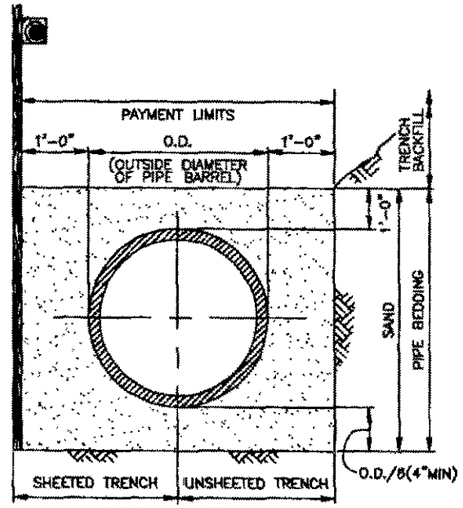


**CLASS C BEDDING**

## PIPE BEDDING DETAILS

**NOTES:**

1. ALL TYPES OF PIPE BEDDING SHALL EXTEND TO UNDISTURBED EARTH AT SIDES AND BOTTOM OF THE TRENCH.
2. SAND AND CRUSHED STONE PIPE BEDDING SHALL BE PLACED AND COMPACTED IN ACCORDANCE WITH SPECIFICATIONS.

QUANTITIES FOR PAYMENT FOR ADDITIONAL PIPE BEDDING MATERIALS ORDERED IN WRITING BY THE ENGINEER

| NOMINAL INSIDE PIPE DIAMETER (INCHES) | 6 | 8 | 10 | 12 | 14 | 15 | 16 | 18 | 20 | 21 | 24 | 27 | 30 | 36 | 42 | 48 | 54 | 60 | 66 | 72 |
|---|---|---|---|---|---|---|---|---|---|---|---|---|---|---|---|---|---|---|---|---|
| CUBIC YARDS OF CONCRETE PER LINEAR FOOT OF PIPE IN CONCRETE ENCASEMENT | 0.141 | 0.167 | 0.191 | 0.216 | 0.229 | 0.266 | 0.252 | 0.299 | 0.300 | 0.340 | 0.383 | 0.427 | 0.472 | 0.566 | 0.690 | 0.797 | 0.909 | 1.027 | 1.150 | 1.279 |
| CUBIC YARDS OF CONCRETE PER LINEAR FOOT OF PIPE IN CLASS A BEDDING (CONCRETE CRADLE) | 0.071 | 0.084 | 0.096 | 0.108 | 0.115 | 0.128 | 0.126 | 0.150 | 0.150 | 0.170 | 0.192 | 0.214 | 0.236 | 0.294 | 0.345 | 0.399 | 0.455 | 0.514 | 0.575 | 0.640 |
| CUBIC YARD OF CRUSHED STONE PER LINEAR FOOT OF PIPE IN CLASS B-1 BEDDING | 0.172 | 0.201 | 0.229 | 0.225 | 0.269 | 0.304 | 0.298 | 0.362 | 0.363 | 0.419 | 0.479 | 0.542 | 0.608 | 0.781 | 0.936 | 1.103 | 1.281 | 1.471 | 1.673 | 1.887 |
| CUBIC YARDS OF CRUSHED STONE PER LINEAR FOOT OF PIPE IN CLASS B BEDDING | 0.055 | 0.068 | 0.078 | 0.088 | 0.094 | 0.111 | 0.108 | 0.143 | 0.143 | 0.173 | 0.207 | 0.243 | 0.280 | 0.381 | 0.475 | 0.578 | 0.690 | 0.810 | 0.939 | 1.078 |

HENRY DORZBACK, P.E. #39449
CHIEF ENGINEER
DEPARTMENT OF SANITARY SEWERS

RALPH L. METCALF II, P.E.
DIRECTOR
DEPARTMENT OF SANITARY SEWERS

DES: DSS
DRN:
CKD:
DATE:

| No. | DATE | REVISIONS |
|---|---|---|
| 1 | | |
| 2 | | |
| 3 | | |

CITY of TAMPA
DEPARTMENT OF SANITARY SEWERS

**MISCELLANEOUS DETAILS**
**(NOT TO SCALE)**

W.O. 4736
SHEET 18 OF 18

c:\r14\dwg\ps\perry-miscdet 40

034-009

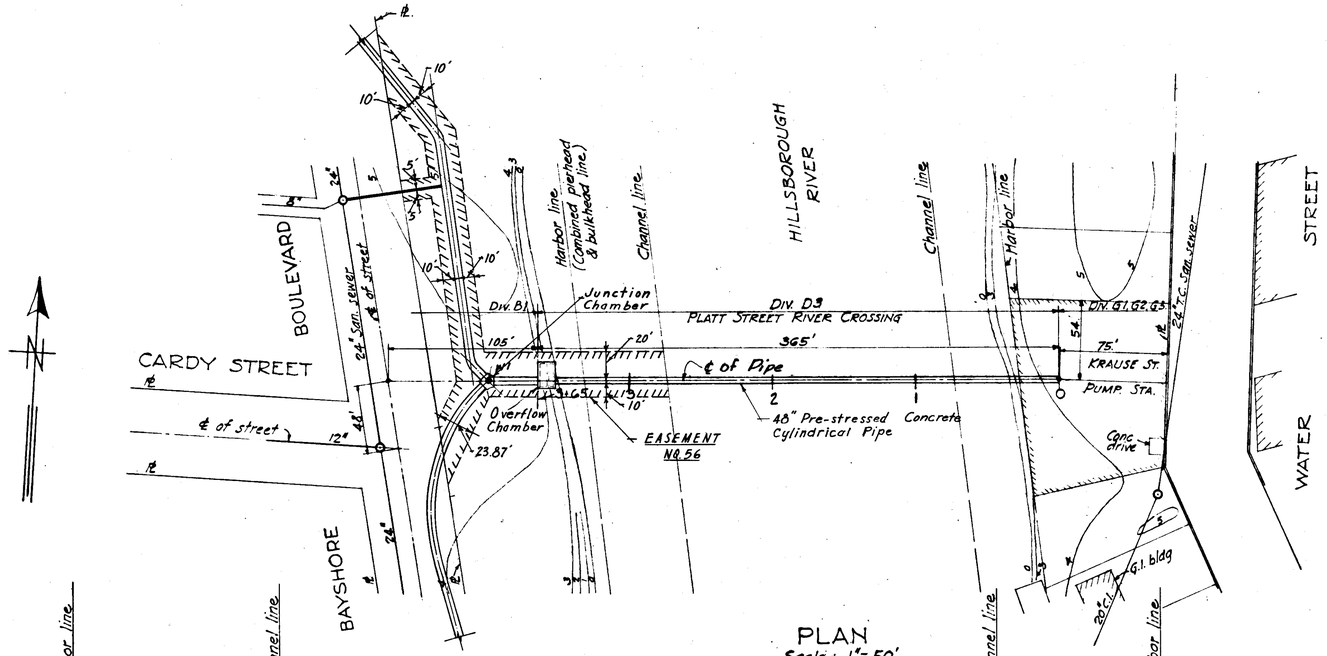


PLAN
Scale: 1" = 50'

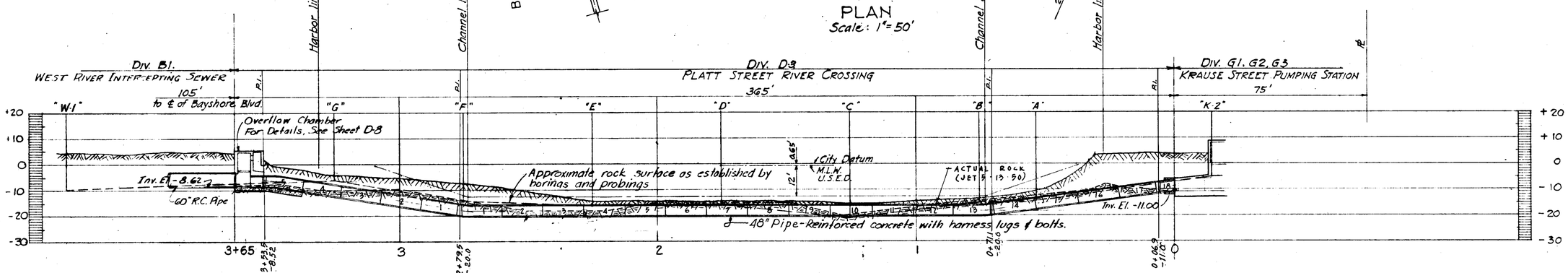


PROFILE
Scale: 1" = 20'
Natural

| BORING DATA | | | | |
|---|---|---|---|---|
| Boring Number | Approx Station | Type | Ground Elevation | Rock Elevation |
| A | 0+53 | Boring | -10.4 | -13.5 |
| B | 0+75 | Probing | -13.3 | -15.1 |
| C | 1+25 | Probing | -15.5 | -21.2 |
| D | 1+75 | Probing | -14.9 | -15.8 |
| E | 2+25 | Probing | -14.4 | -15.9 |
| F | 2+75 | Probing | -7.9 | -14.2 |
| G | 3+25 | Boring | -4.5 | -6.3 |
| K-2 | 0-15 | Boring | +4.2 | -6.8 |
| W-1 | 4+30 | Boring | +4.7 | -9.8 |

Notes: 1. All elevations are referred to City Datum which is 0.65 feet above the Mean Low Water Datum of the U.S. Engineers.
2. All borings are approximately on ℄ of crossing.

NOTE

This sheet revised and supersedes Sheet D-7 dated June 1949.

GREELEY AND HANSEN, ENGINEERS.
BY Paul E. Langton 11/17/49
Roy A. Van Camp 11-21-49
SUPT. DEPT OF PUBLIC WORKS.

SEWER LINE LOCATION
SEW. MAP No. | LINE No.
I-12-32

· AS-BUILT PLAN ·
Revised to show actual conditions according to construction records as of October 26, 1951.
A.F.L. (12-26-51)

CITY OF TAMPA, FLORIDA
SEWAGE DISPOSAL SYSTEM
DIV D-3 PLATT STREET RIVER CROSSING

PLAN AND PROFILE,
SUPPLEMENTARY DRAWING
SHOWING REVISED PROFILE.

DES:
DR:
CKD:
DATE NOV. 4, 1949
SCALES 1" = 50' 1" = 20'
SHEET D-7a
12

GREELEY & HANSEN
ENGINEERS
CHICAGO, ILL.

146-037

# INDEX MAP

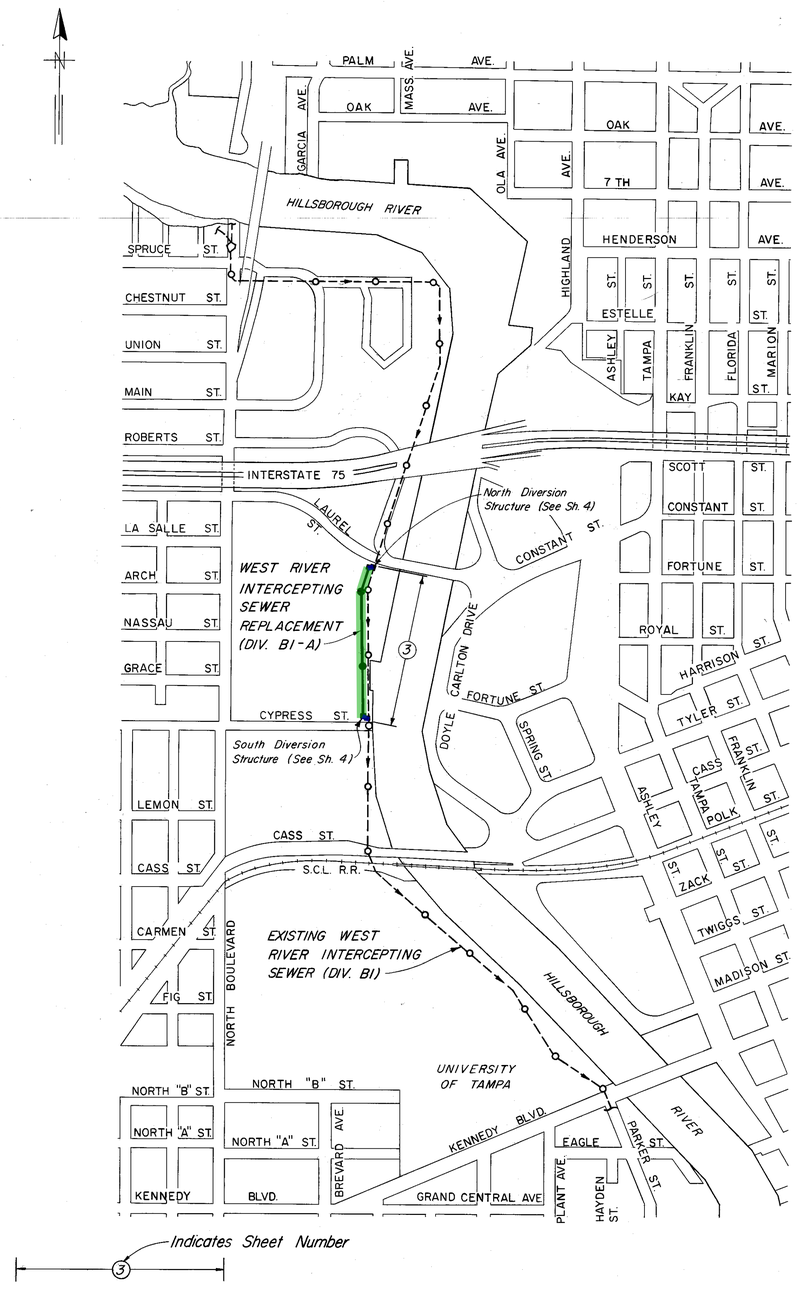


# LEGEND

## EXISTING STRUCTURES AND FEATURES

| | UP TO 36" | 36" AND LARGER |
|---|---|---|
| SANITARY SEWER & MANHOLE | | |
| STORM SEWER & MANHOLE | | |
| SANITARY FORCE MAIN | FM | |
| WATER MAIN | | |
| GAS MAIN & DRIP | | |
| ELECTRIC CABLE OR DUCT | | |
| TELEPHONE CABLE OR DUCT | | |
| FIRE ALARM CABLE | F F | |
| VALVE | | |
| HYDRANT | | |
| CATCH BASIN | CB CB | |
| POLE, POWER OR TELEPHONE | | |
| VALVE VAULT | V | |
| WATER METER | M | |
| ELECTRIC MANHOLE OR VAULT | E | |
| TELEPHONE MANHOLE OR VAULT | T | |
| SPOT ELEVATION | 6.7 | |

| | |
|---|---|
| BUILDING | |
| FENCE | |
| PROPERTY LINE | R. |
| PROPERTY CORNERS: | |
| IRON PIPE OR PIN | I.P. |
| CONCRETE MONUMENT | Mon. |
| TREES: | |
| DECIDUOUS | |
| PALM | |
| TELEPHONE BOOTH | TB |
| SIGN OR SIGNAL | S |
| WATER COURSE | |
| PAVEMENT | Pvmnt. |
| CONTOUR LINE | 50 |

## SEWER CONSTRUCTION

IN THIS DIVISION:

UP TO 36" — M.H. +50.3

36" AND LARGER — D.M.H. +60.0; M.H. +65.0

IN ADJOINING DIVISION: D.M.H. 0+00

### PLAN

### PROFILE

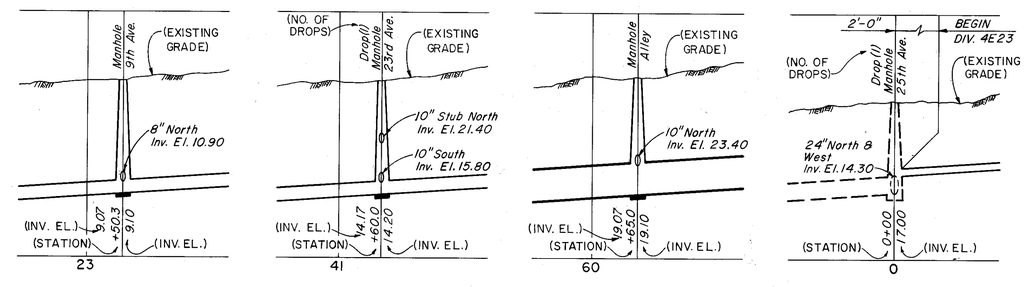


| | | | | | | |
|---|---|---|---|---|---|---|
| GREELEY AND HANSEN ENGINEERS 1211 NORTH WEST SHORE BLVD. TAMPA, FLORIDA 33607 | DESIGNED T.L.W. DRAWN J.L.E. CHECKED T.L.W. | APPROVED ____ DATE ____ SUPT., DEPT. OF SANITARY SEWERS ____ DATE ____ GREELEY AND HANSEN, ENGINEERS | NO. DATE APPD REVISION | SCALE 400 0 400 800FT. 1" = 400FT | CITY OF TAMPA, FLORIDA SEWAGE DISPOSAL SYSTEM WEST RIVER INTERCEPTING SEWER REPLACEMENT | DIVISION BI-A INDEX MAP AND LEGEND | PROJ NO. 2020-415-01-22 SHEET 2 OF 7 DATE SEPT. 1975 REV 0 |

146-37

146-038

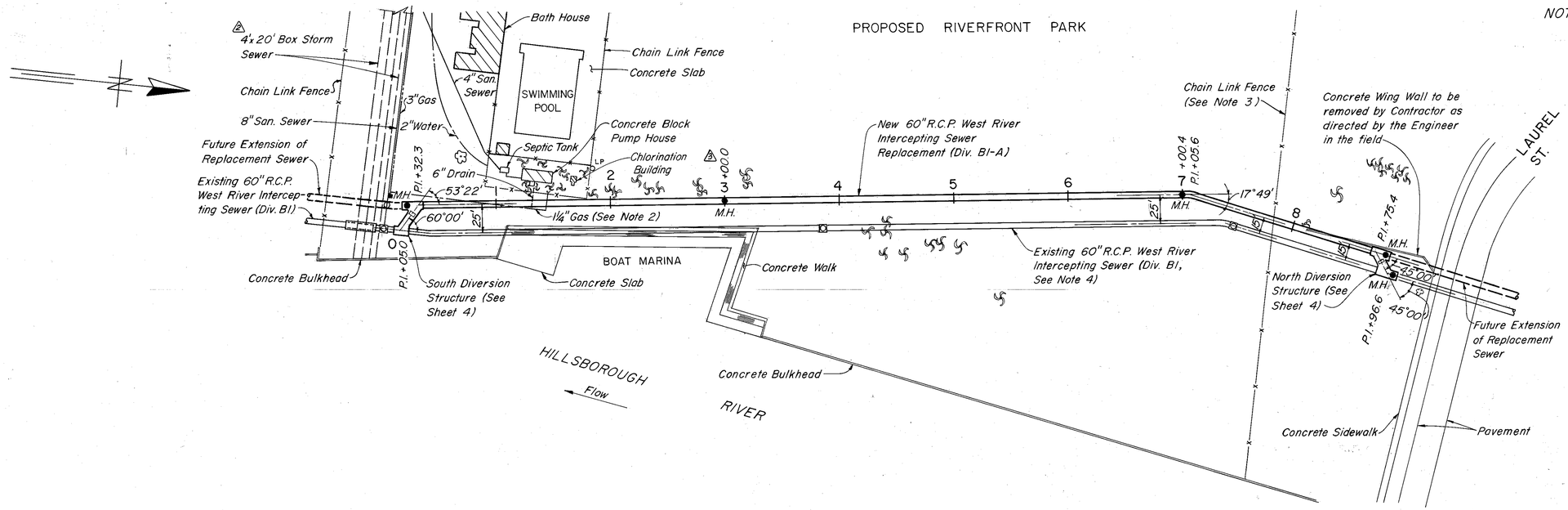


PLAN

NOTES:

1. All reinforced concrete pipe sewer, including manhole bases and fittings, shall conform to ASTM Des: C 76, Class V and shall be manufactured with plastic sheet lining, in accordance with the Specifications, over an arc of 270 degrees centered on the vertical center line of the pipe.
2. 1¼ inch gas line to be relocated by others from Sta. 0+00 to Sta. 1+45.
3. Contractor is not required to replace chain link fence at Sta. 7+82 if removed during construction. However, all other fences at all other locations shall be maintained or replaced by the Contractor in accordance with the Specifications.
4. The existing 60" R.C.P. sewer shall be abandoned upon completion of the new 60" R.C.P. replacement sewer between Sta. 0+05.0 and Sta. 8+96.6. The Contractor shall fill the abandoned sewer and manholes completely with sand.
5. Contractor shall backfill to existing grade.

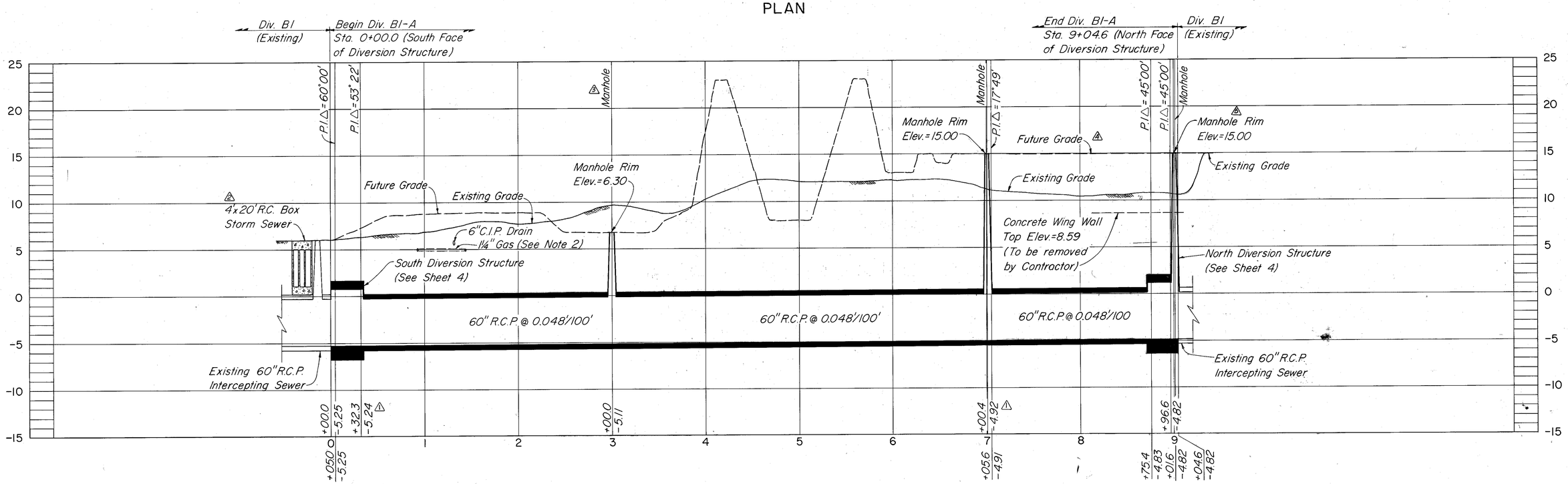


PROFILE

| NO. | DATE | APPD | REVISION |
|---|---|---|---|
| 5 | 12/8/75 | TLW | Raised M.H. Rim El. @ N. Div. Struct. |
| 4 | 12/8/75 | TLW | Raised Future Grade Sta. 7+00 to 9+30 |
| 3 | 12/8/75 | TLW | Moved M.H. from Sta. 3+60 to 3+00 |
| 2 | 11/10/75 | TLW | Rev. Exist. Storm Sewer |
| 1 | 10/28/75 | TLW | Rev. Inv. El. Sta. 0+32.3 & 7+00.4 |

SCALE: HORIZ. 50 0 50 100 FT 1"=50'; VERT. 5 0 5 10 FT 1"=5'

GREELEY AND HANSEN ENGINEERS
1211 NORTH WEST SHORE BLVD.
TAMPA, FLORIDA 33607

DESIGNED TLW
DRAWN AA
CHECKED TLW

APPROVED
SUPT., DEPT. OF SANITARY SEWERS — DATE
GREELEY AND HANSEN, ENGINEERS — DATE

CITY OF TAMPA, FLORIDA
SEWAGE DISPOSAL SYSTEM
WEST RIVER INTERCEPTING SEWER REPLACEMENT

DIVISION BI-A
PLAN AND PROFILE
STA. 0+00.0 TO STA. 9+04.6

PROJ NO. 2020-415-01-22
SHEET 3 OF 7
DATE SEPT. 1975 REV 5

146-38

146-039

NOTES (Both Structures):

1. Break out top half of existing sewer within diversion structures after constucting all structure walls. Break out side of existing sewer as shown at diversion channels while maintaining continuous flow in existing sewer.
2. Line interior of top slabs, walls, channels and manhole barrels with plastic sheet lining in only the portions of each structure as shown. Lining in channels shall match lining in new 60" R.C.P. sewer.
3. Apply approved bond breaker to joints of removable slabs and plugs.
4. Manhole barrels and cones shall conform to the details on Sheet 6.
5. All reinforcing shall be 2" clear.

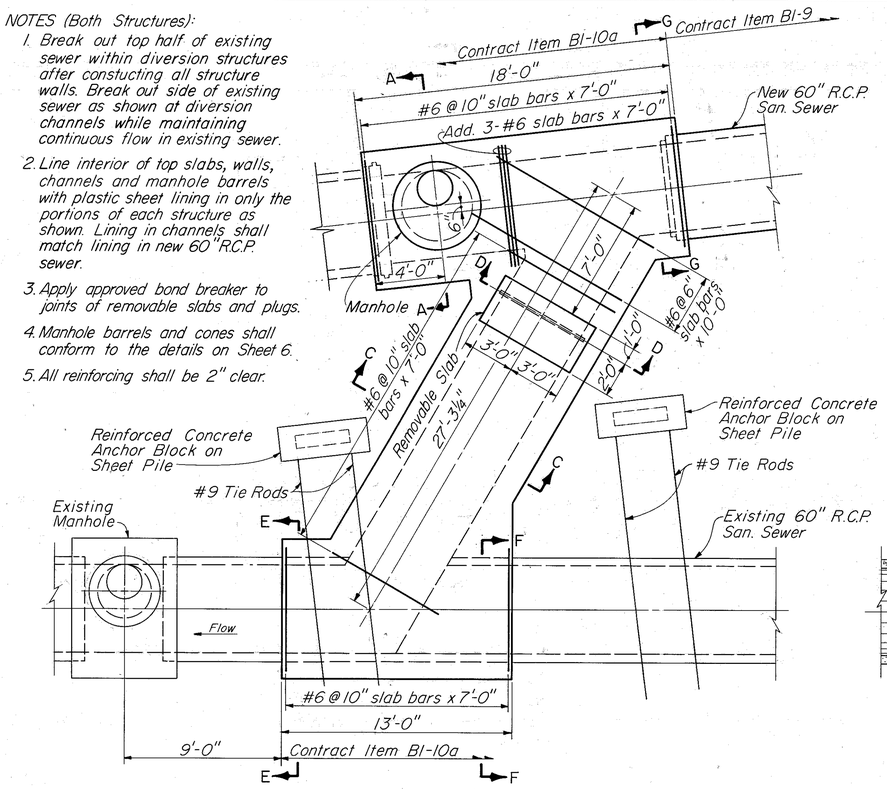


PLAN

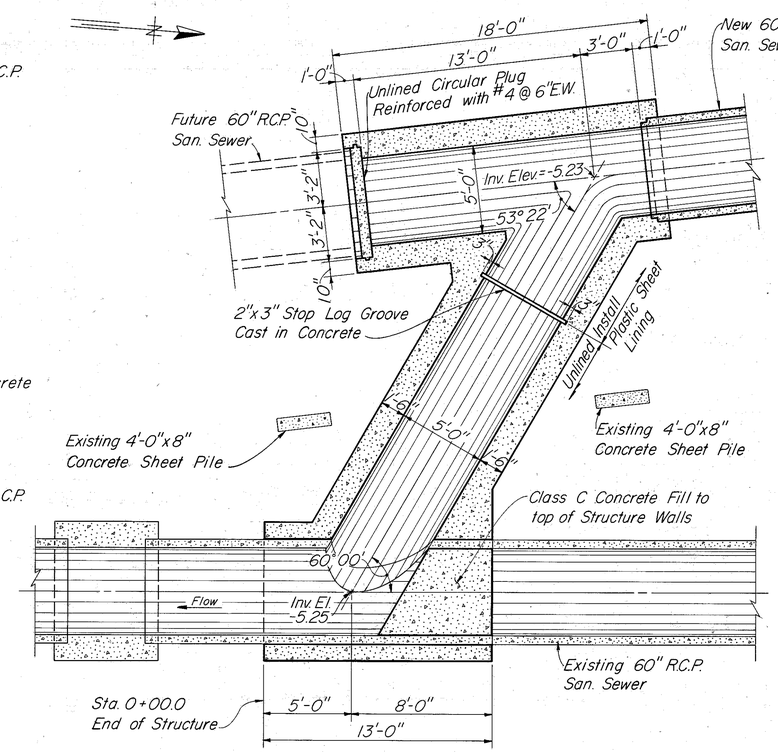


SECTIONAL PLAN

SOUTH DIVERSION STRUCTURE

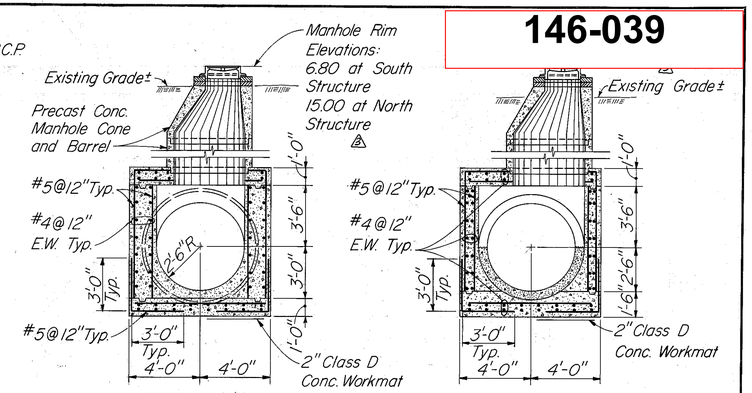


SECTION A-A
(SOUTH STRUCTURE – MIRROR IMAGE FOR NORTH STRUCTURE)

SECTION B-B
(NORTH STRUCTURE ONLY)

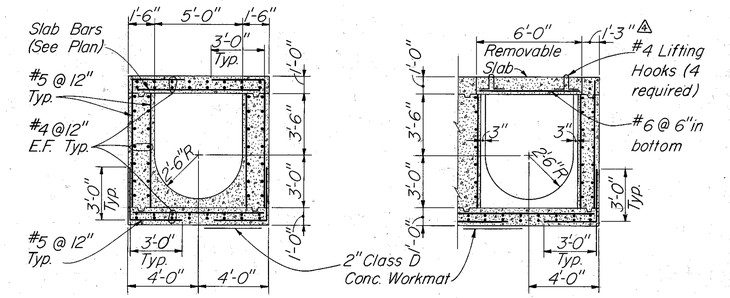


SECTION C-C
(SOUTH STRUCTURE ONLY)

SECTION D-D
(BOTH STRUCTURES)

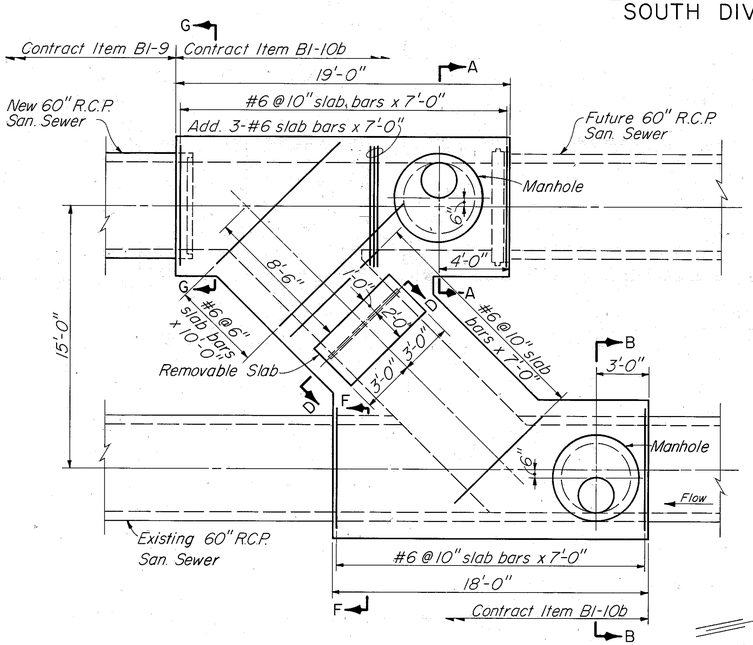


PLAN

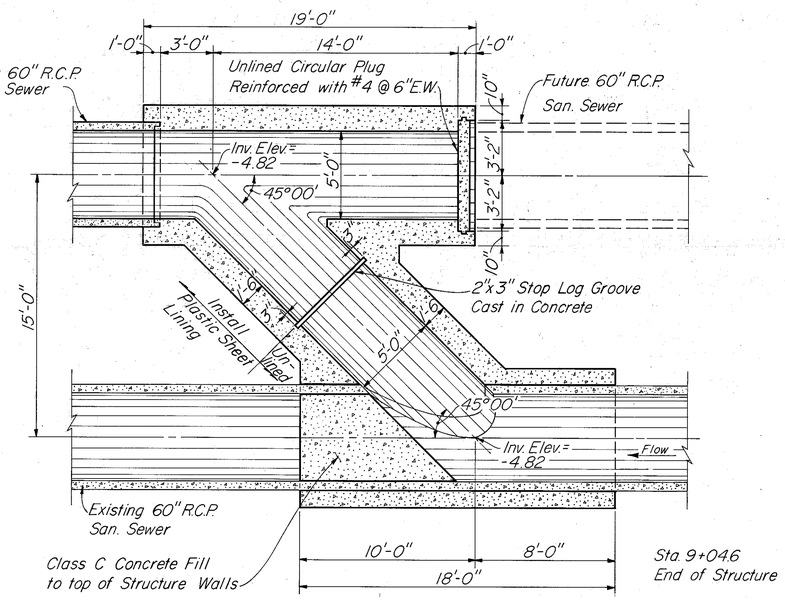


SECTIONAL PLAN

NORTH DIVERSION STRUCTURE

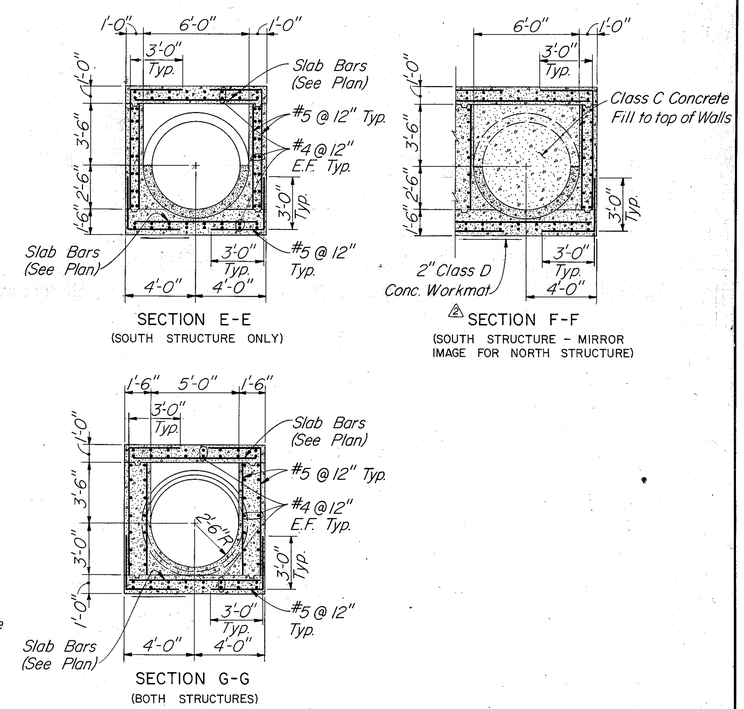


SECTION E-E
(SOUTH STRUCTURE ONLY)

SECTION F-F
(SOUTH STRUCTURE – MIRROR IMAGE FOR NORTH STRUCTURE)

SECTION G-G
(BOTH STRUCTURES)

| NO. | DATE | APPD | REVISION |
|---|---|---|---|
| 5 | 1/15/76 | TLW | See Supplementary Dwg. S.D.-1 |
| 4 | 1/15/76 | TLW | Changed dimension Sect. D-D |
| 3 | 12/8/75 | TLW | Raised M.H. Rim Elev. Sec. A-A, B-B |
| 2 | 30/10/75 | TLW | Change Class C to D Workmat |
| 1 | 30/10/75 | TLW | Omited dimension to outside of pipe |

GREELEY AND HANSEN ENGINEERS
1211 NORTH WEST SHORE BLVD.
TAMPA, FLORIDA 33607

DESIGNED T.L.W., J.S.
DRAWN K.E.F., F.J.S.
CHECKED T.L.W.

APPROVED
SUPT., DEPT. OF SANITARY SEWERS — DATE
GREELEY AND HANSEN, ENGINEERS — DATE

SCALE 4 0 4 8 FT 1/4" = 1'-0"

CITY OF TAMPA, FLORIDA
SEWAGE DISPOSAL SYSTEM
WEST RIVER INTERCEPTING SEWER REPLACEMENT

DIVISION BI-A
DIVERSION STRUCTURE DETAILS

PROJ NO. 2020-415-01-22
SHEET 4 OF 7
DATE SEPT. 1975 REV. 5

146-39

146-040

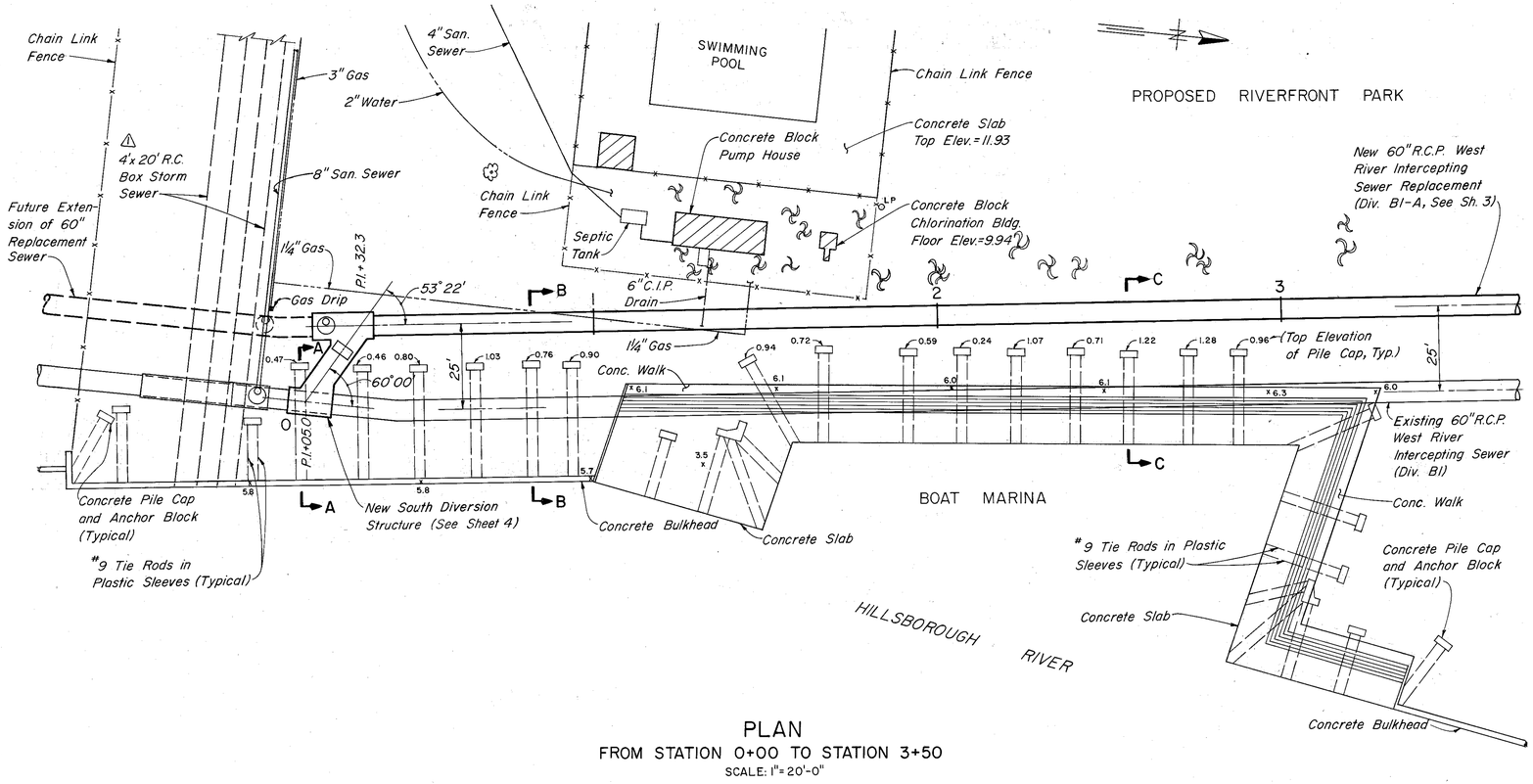


PLAN
FROM STATION 0+00 TO STATION 3+50
SCALE: 1"= 20'-0"

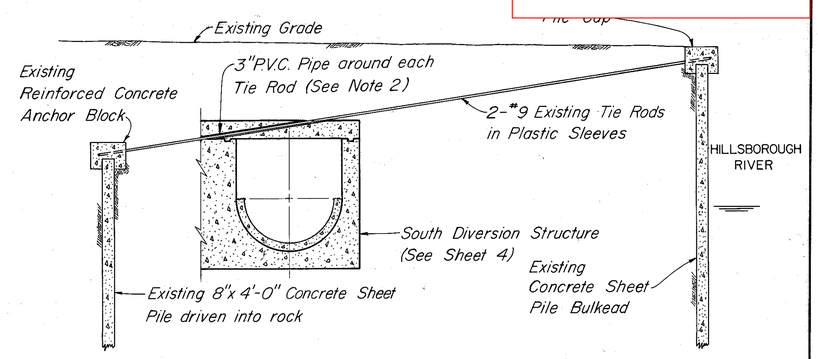


SECTION A-A
SCALE ¼"= 1'-0"

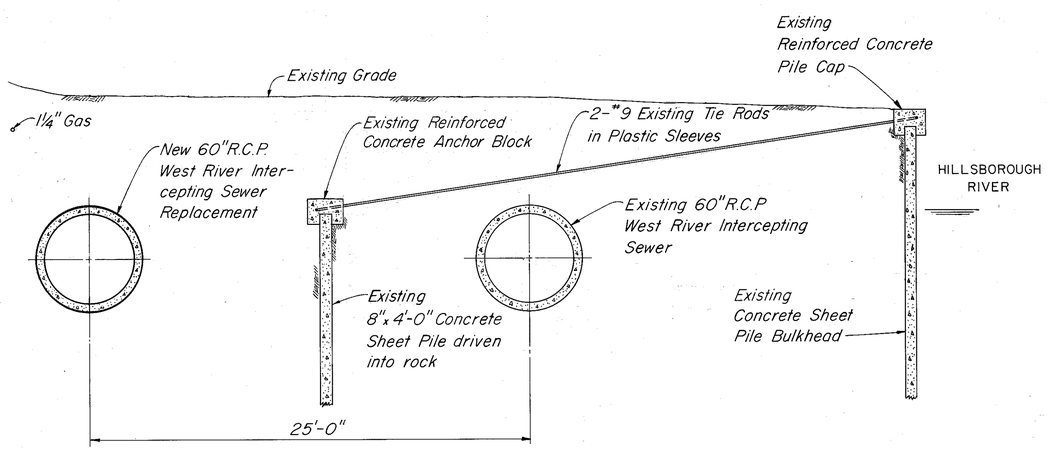


SECTION B-B
SCALE: ¼"= 1'-0"

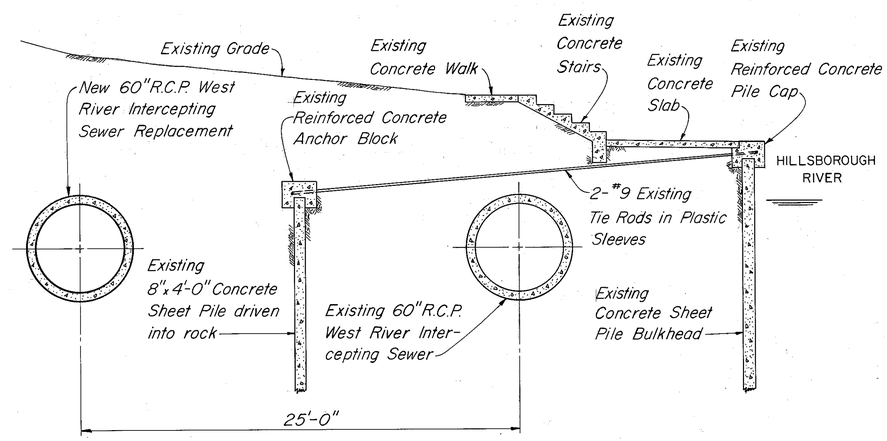


SECTION C-C
SCALE: ¼"= 1'-0"

NOTES:

1. The Contractor shall take all precautions necessary to protect existing sheet piles, pile caps, anchor blocks and tie rods from any damage or displacement. Any such items damaged or displaced as a result of operations of the Contractor shall be repaired or replaced by the Contractor, to the satisfaction of the Engineer, at no cost to the City.
2. Split 3" dia. P.V.C. pipe and place halves around each tie rod to be within concrete of diversion structure. Rejoin pipe halves with approved pipe clamps, center tie rods within the pipes and caulk ends with Ram-Nek or approved equal.

| | | | | | | | |
|---|---|---|---|---|---|---|---|
| GREELEY AND HANSEN ENGINEERS, 1211 NORTH WEST SHORE BLVD. TAMPA, FLORIDA 33607 | DESIGNED TLW<br>DRAWN AA<br>CHECKED TLW | APPROVED<br>DATE<br>SUPT., DEPT. OF SANITARY SEWERS<br>DATE<br>GREELEY AND HANSEN, ENGINEERS | NO. | DATE | APPD | REVISION | SCALE<br>20 0 10 20 FT 1" = 20'<br>4 0 4 8 FT 1/4" = 1'-0" |
| | | | 1 | 11/10/75 | TLW | Rev. Exist. Storm Sewer | |

CITY OF TAMPA, FLORIDA
SEWAGE DISPOSAL SYSTEM
WEST RIVER INTERCEPTING SEWER REPLACEMENT

DIVISION B1-A
MISCELLANEOUS DETAILS

PROJ NO. 2020-415-01-22
SHEET 5 OF 7
DATE SEPT. 1975 REV 1

146-40

146-041

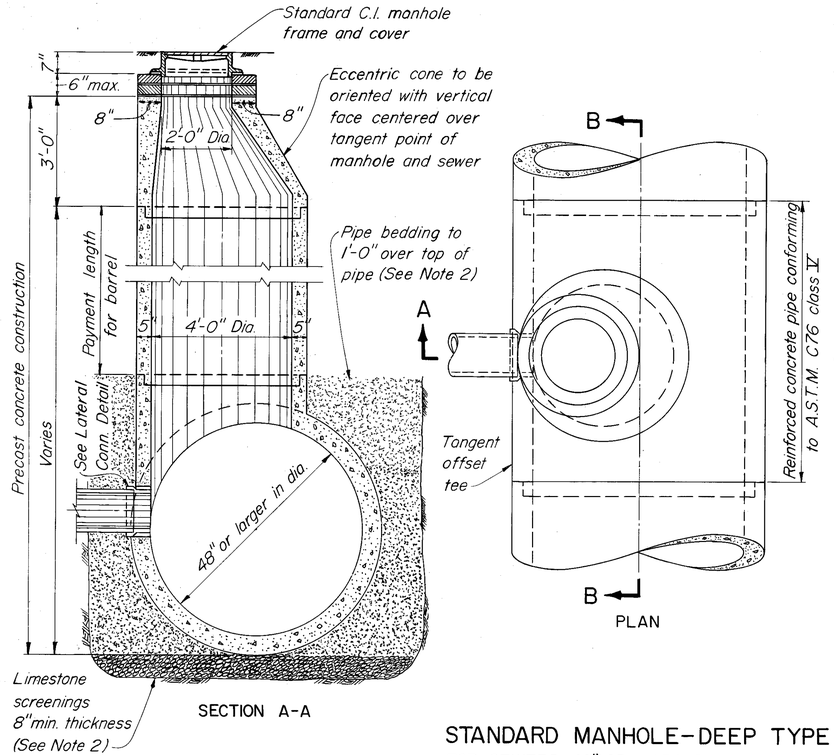


## STANDARD MANHOLE-DEEP TYPE

FOR SEWERS 48" OR LARGER IN DIAMETER

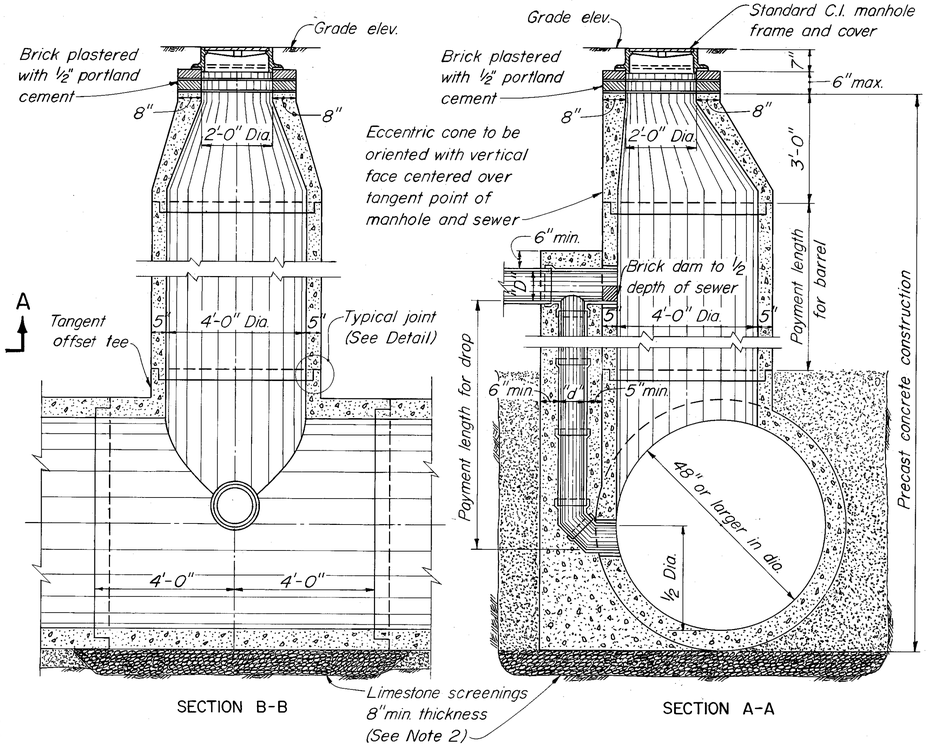


| SCHEDULE FOR DROP MANHOLE | |
|---|---|
| INLET PIPE DIAMETER "D" | DROP PIPE DIAMETER "d" |
| 8" | 8" |
| 10" | 8" |
| 12" | 10" |
| 15" | 12" |
| 18" | 15" |
| 21" | 18" |
| 24" | 18" |

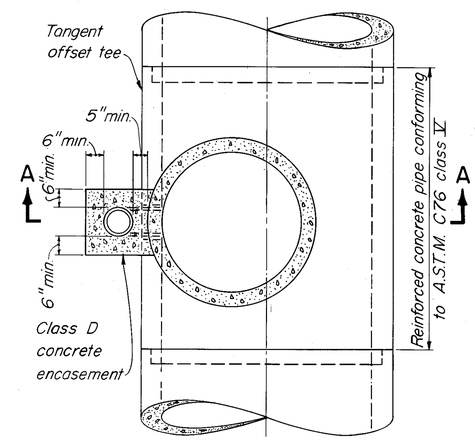


SECTIONAL PLAN

## STANDARD DROP MANHOLE

FOR SEWERS 48" OR LARGER IN DIAMETER

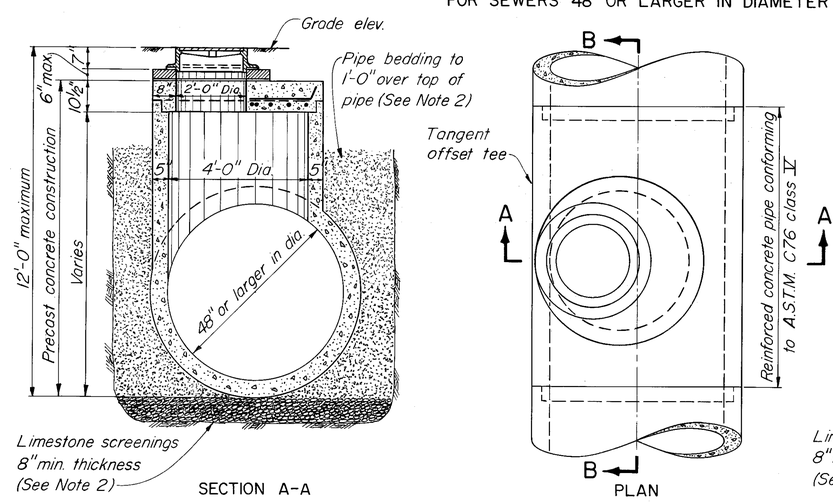


## STANDARD MANHOLE-SHALLOW TYPE

OR SEWERS 48" OR LARGER IN DIAMETER

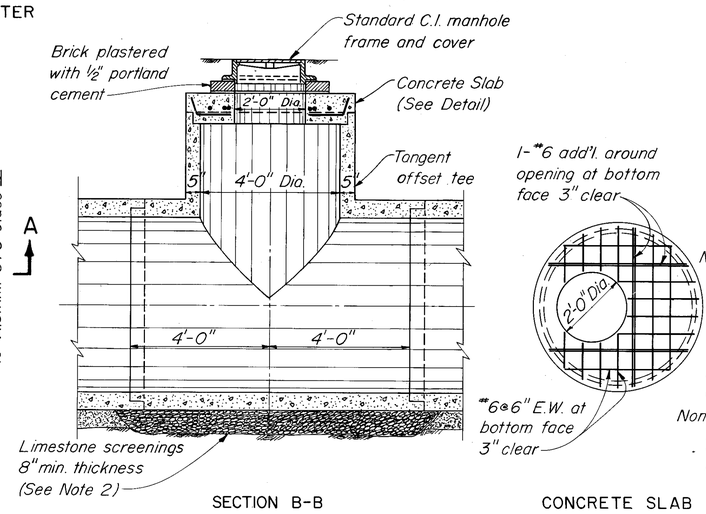





CONCRETE SLAB DETAIL

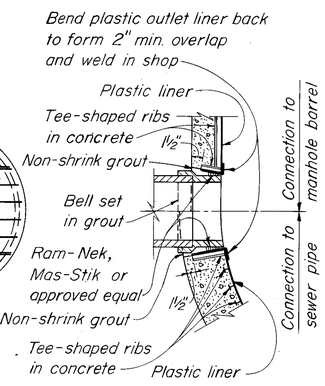


## LATERAL CONNECTION DETAIL

NOT TO SCALE

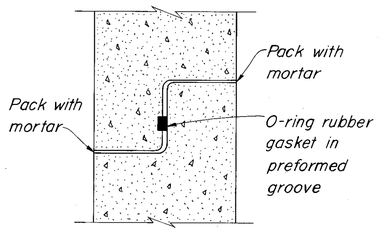


## MANHOLE BARREL JOINT DETAIL

NOT TO SCALE

NOTES:

1. All pipe stubs from manholes for future connections or connections to other Contract Divisions shall be provided with water tight plugs placed from within the manhole.
2. See Specifications for materials requirements and placement and compaction of pipe bedding and limestone screenings.

| | | | | | |
|---|---|---|---|---|---|
| GREELEY AND HANSEN ENGINEERS, 1211 NORTH WEST SHORE BLVD. TAMPA, FLORIDA 33607 | DESIGNED T.L.W. DRAWN A.A. CHECKED T.L.W. | APPROVED ____ DATE ____ SUPT., DEPT. OF SANITARY SEWERS ____ DATE ____ GREELEY AND HANSEN, ENGINEERS | NO. DATE APPD REVISION | SCALE 1 0 1 2 3 4 5 FT 1/2" = 1'-0" | CITY OF TAMPA, FLORIDA SEWAGE DISPOSAL SYSTEM WEST RIVER INTERCEPTING SEWER REPLACEMENT |

DIVISION BI-A

STANDARD MANHOLE DETAILS

FOR SEWERS 48" OR LARGER IN DIAMETER

PROJ NO. 2020-415-01-22 | SHEET 6 OF 7 | DATE SEPT. 1975 | REV 0

146-41

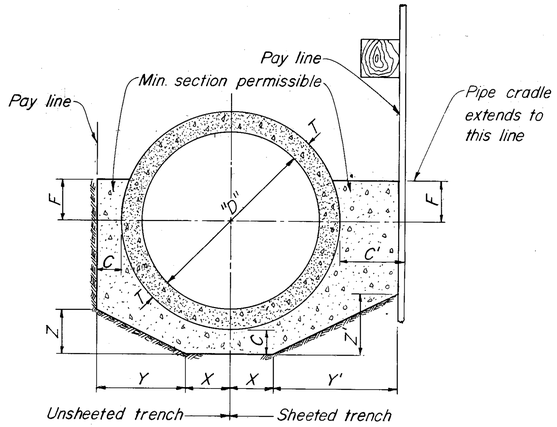


## CRADLE DETAILS

FOR ALL TYPES AND SIZES OF SEWERS WHEN ORDERED OR SPECIFIED

NOT TO SCALE

NOTES:

The pipe cradle is to be carried to undisturbed earth in unsheeted trench and to sheeting in sheeted trench. No forming will be permitted for pipe cradle, and no payment will be made for additional excavation required for the pipe cradle. Where the cradle extends beyond pay line, slopes shall be as shown. Tables at right indicate pay lines, minimum section permissible and the amounts which will be allowed for payment for concrete encasement

| FOR CLAY PIPE SEWERS 24" OR LESS IN DIA. | | | | | | | | |
|---|---|---|---|---|---|---|---|---|
| TABLE OF DIMENSIONS - UNSHEETED TRENCH | | | | | | | | |
| DIAMETER = "D" | | 8" | 10" | 12" | 15" | 18" | 21" | 24" |
| | T | 3/4" | 7/8" | 1" | 1 1/4" | 1 1/2" | 1 3/4" | 2" |
| | C | 4" | 4" | 4" | 4" | 4" | 4" | 4" |
| | F | 2" | 2 1/2" | 3" | 4" | 4 1/2" | 5" | 6" |
| | X | 2" | 2 1/2" | 3" | 4" | 4 1/2" | 5 1/4" | 6" |
| | Y | 6 3/4" | 7 3/8" | 8" | 8 3/4" | 10" | 11" | 12" |
| | Z | 3 3/8" | 3 3/4" | 4" | 4 3/8" | 5" | 5 1/2" | 6" |
| CU. YD. OF CRADLE PER L.F. OF PIPE | | 0.029 | 0.035 | 0.041 | 0.052 | 0.061 | 0.072 | 0.083 |
| TABLE OF DIMENSIONS - SHEETED TRENCH | | | | | | | | |
| DIAMETER = "D" | | 8" | 10" | 12" | 15" | 18" | 21" | 24" |
| | T | 3/4" | 7/8" | 1" | 1 1/4" | 1 1/2" | 1 3/4" | 2" |
| | C' | 10" | 10" | 10" | 10" | 10" | 10" | 10" |
| | F | 2" | 2 1/2" | 3" | 4" | 4 1/2" | 5" | 6" |
| | X | 2" | 2 1/2" | 3" | 4" | 4 1/2" | 5 1/4" | 6" |
| | Y' | 12 3/4" | 13 3/8" | 14" | 14 3/4" | 16" | 17" | 18" |
| | Z' | 6 3/8" | 6 3/4" | 7" | 7 3/8" | 8" | 8 1/2" | 9" |
| CU. YD. OF CRADLE PER L.F. OF PIPE | | 0.047 | 0.057 | 0.067 | 0.085 | 0.099 | 0.116 | 0.134 |

| FOR REINF. CONC. PIPE SEWERS 27" TO 72" IN DIA. | | | | | | | | | |
|---|---|---|---|---|---|---|---|---|---|
| TABLE OF DIMENSIONS - UNSHEETED TRENCH | | | | | | | | | |
| DIAMETER = "D" | 27" | 30" | 36" | 42" | 48" | 54" | 60" | 66" | 72" |
| T | 3 1/4" | 3 1/2" | 4" | 4 1/2" | 5" | 5 1/2" | 6" | 6 1/2" | 7" |
| C | 4" | 4" | 4" | 4" | 5" | 5" | 5" | 5" | 5" |
| F | 6" | 7" | 9" | 10" | 12" | 13" | 15" | 16" | 18" |
| X | 6 1/2" | 7 1/2" | 9 1/2" | 10 1/2" | 12" | 13 1/2" | 15" | 16 1/2" | 18" |
| Y | 14" | 15" | 17" | 19" | 21 1/2" | 24" | 26" | 28" | 30" |
| Z | 7" | 7 1/2" | 8 1/2" | 9 1/2" | 10 3/4" | 12" | 13" | 14" | 15" |
| CU. YD. OF CRADLE PER L.F. OF PIPE | 0.091 | 0.109 | 0.145 | 0.183 | 0.218 | 0.264 | 0.302 | 0.338 | 0.381 |
| TABLE OF DIMENSIONS - SHEETED TRENCH | | | | | | | | | |
| DIAMETER = "D" | 27" | 30" | 36" | 42" | 48" | 54" | 60" | 66" | 72" |
| T | 3 1/4" | 3 1/2" | 4" | 4 1/2" | 5" | 5 1/2" | 6" | 6 1/2" | 7" |
| C' | 10" | 10" | 10" | 10" | 10" | 10" | 10" | 10" | 10" |
| F | 6" | 7" | 9" | 10" | 12" | 13" | 14" | 16" | 18" |
| X | 6 1/2" | 7 1/2" | 9 1/2" | 10 1/2" | 12" | 13 1/2" | 15" | 16 1/2" | 18" |
| Y' | 20" | 21" | 23" | 25" | 27 1/2" | 30" | 32" | 34" | 36" |
| Z' | 10" | 10 1/2" | 11 1/2" | 12 1/2" | 13 3/4" | 15" | 16" | 17" | 18" |
| CU. YD. OF CRADLE PER L.F. OF PIPE | 0.149 | 0.172 | 0.222 | 0.271 | 0.322 | 0.376 | 0.430 | 0.477 | 0.534 |

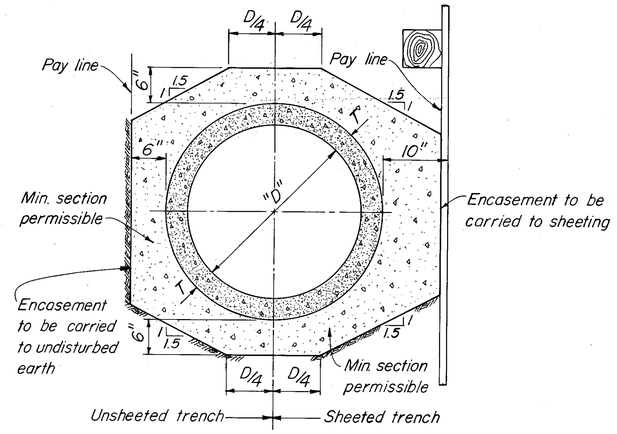


## COMPLETE ENCASEMENT DETAILS

FOR ALL TYPES AND SIZES OF SEWERS WHEN ORDERED OR SPECIFIED

NOT TO SCALE

NOTE:

The tables below indicate the amounts which will be allowed for payment for concrete encasement

| CU. YD. OF ENCASEMENT PER LIN. FT OF SEWER FOR CLAY PIPE 24" OR LESS IN DIA. | | | | | | | |
|---|---|---|---|---|---|---|---|
| DIAMETER = "D" | 8" | 10" | 12" | 15" | 18" | 21" | 24" |
| Unsheeted Trench | 0.075 | 0.087 | 0.100 | 0.120 | 0.142 | 0.163 | 0.186 |
| Sheeted Trench | 0.089 | 0.105 | 0.121 | 0.146 | 0.171 | 0.197 | 0.224 |

| CU. YD. OF ENCASEMENT PER LIN. FT. OF SEWER FOR REINF. CONC. PIPE 27" TO 72" IN DIA. | | | | | | | | | |
|---|---|---|---|---|---|---|---|---|---|
| DIAMETER = "D" | 27" | 30" | 36" | 42" | 48" | 54" | 60" | 66" | 72" |
| Unsheeted Trench | 0.216 | 0.244 | 0.292 | 0.344 | 0.401 | 0.457 | 0.518 | 0.579 | 0.645 |
| Sheeted Trench | 0.260 | 0.291 | 0.349 | 0.411 | 0.475 | 0.542 | 0.611 | 0.682 | 0.757 |

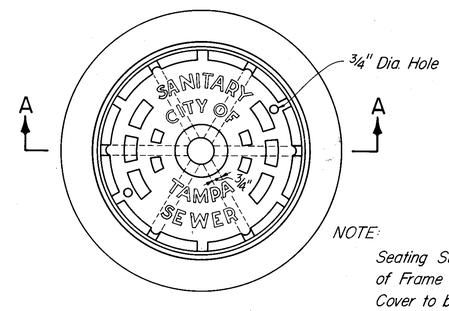


PLAN

NOTE:

Seating Surface of Frame and Cover to be machined to fit

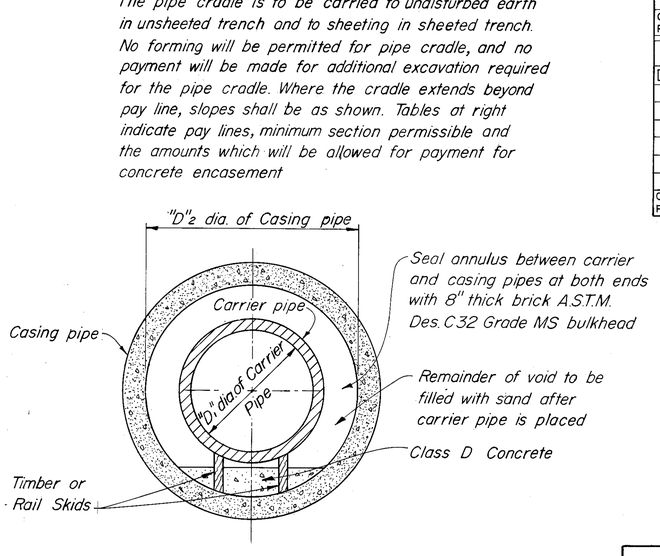


## DETAIL OF SPECIAL CROSSINGS

FOR ALL TYPES AND SIZES OF SEWERS WHEN ORDERED OR SPECIFIED

NOT TO SCALE

NOTES:

All casing pipe shall be tongue and groove reinforced concrete pipe conforming with A.S.T.M. Des. C76 class V or welded steel pipe A.S.T.M. Des. A139 Table below indicates minimum casing pipe sizes to be used for all types and sizes of carrier pipe.

| CARRIER & CASING PIPES SIZES | | | | | | | | | | | |
|---|---|---|---|---|---|---|---|---|---|---|---|
| Carrier pipe "D1" | 21" & less | 24" | 27" | 30" | 36" | 42" | 48" | 54" | 60" | 72" |
| Casing pipe "D2" | 36" | 42" | 48" | 54" | 60" | 66" | 78" | 84" | 90" | 102" |

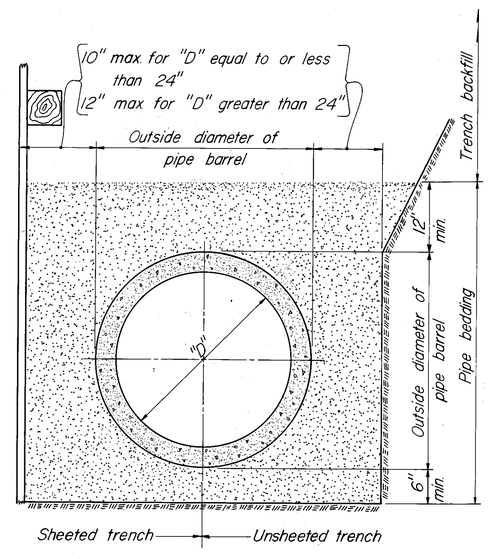


## PIPE BEDDING DETAIL

FOR ALL TYPES AND SIZES OF SEWERS

NOT TO SCALE

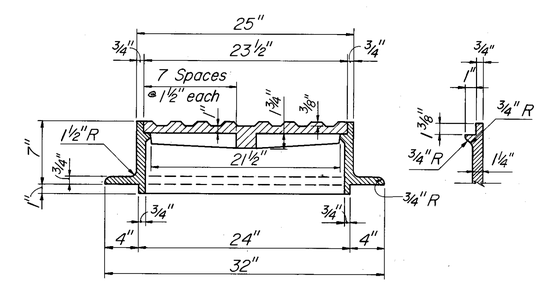


SECTION A-A

## CAST IRON MANHOLE FRAME & COVER

ALL MANHOLES

*Approx. Wt. = 380#*

SCALE: 1 1/2" = 1'-0"

| | | | | | | | |
|---|---|---|---|---|---|---|---|
| GREELEY AND HANSEN ENGINEERS, 1211 NORTH WEST SHORE BLVD., TAMPA, FLORIDA 33607 | DESIGNED T.L.W. / DRAWN A.A., R.D.C. / CHECKED T.L.W. | APPROVED ____ DATE ____ SUPT., DEPT. OF SANITARY SEWERS; ____ DATE ____ GREELEY AND HANSEN, ENGINEERS | NO. / DATE / APPD / REVISION | SCALE: 1 0 1 FT 1-1/2" = 1'-0" | CITY OF TAMPA, FLORIDA; SEWAGE DISPOSAL SYSTEM; WEST RIVER INTERCEPTING SEWER REPLACEMENT | DIVISION BI-A; MISCELLANEOUS STANDARD DETAILS | PROJ NO. 2020-415-01-22; SHEET 7 OF 7; DATE SEPT. 1975; REV 0 |

146-42

| GREELEY AND HANSEN ENGINEERS | COMP BY RN DATE 10-17-75 CKD BY JFS DATE 10-17-75 | PROJECT TAMPA FLA. DIVISION BI-A W. RIVER INCERCEPTING SEWER REPL. | SUBJECT DRAWING AD-1-1 TO ACCOMPANY ADDENDUM NO. 1 |
|---|---|---|---|

**146-043**

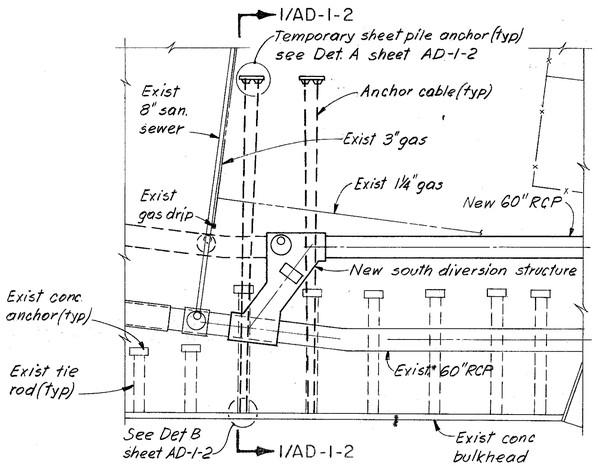


PLAN - SOUTH DIVERSION STRUCTURE
SCALE: 1" = 20'

NOTE: Contractor shall probe to locate all underground utilities or obstructions before driving sheet piling.

TEMPORARY TIE BACK SYSTEM

MATERIALS:

1. SHEET PILING SHALL BE PZ27 SECTIONS CONFORMING TO ASTM DES: A328. SHEET PILING SHALL BE DRIVEN WITH A HAMMER OF SUFFICIENT ENERGY TO ACHIEVE PENETRATIONS REQUIRED.
2. WALERS, PLATES, THREADED ROD, AND LIKE ITEMS SHALL CONFORM TO ASTM DES: A 36. WELDING SHALL BE DONE WITH E70 ROD.
3. WIRE ROPE SHALL BE STEEL 6 X 19 OR 6 X 37, CORROSION RESISTANT, WITH MINIMUM BREAKING STRENGTH OF 25 TONS, EQUAL TO U.S. STEEL TIGER BRAND HOISTING ROPE WITH IWRC CORE. ALL CLEVISES, THIMBLES, SOCKETS, PINS AND LIKE ITEMS SHALL DEVELOP ULTIMATE STRENGTH OF THE WIRE ROPE.

PROCEDURE:

1. INSTALLATION OF ENTIRE TEMPORARY TIE BACK SYSTEM SHALL BE COMPLETE AND APPROVED BEFORE PROCEEDING WITH ANY OTHER WORK IN THIS AREA.
2. INSTALL SHEET PILING AND WALERS. DRILL 2-INCH ROUND HOLES IN BULKHEAD CAP IN LOCATIONS SHOWN. EXCAVATE AS REQUIRED AND INSTALL TIE BACK SYSTEM.
3. TIGHTEN TIE BACKS TO 15 KIPS EACH, USING A TORQUE WRENCH, BUT NOT MORE THAN THAT FORCE WHICH CAUSES ANY MOVEMENT IN THE EXISTING BULKHEAD. MAINTAIN CONTINUOUS INSTRUMENTED OBSERVATION OF BULKHEAD CAP DURING TIGHTENING TO DETECT ANY MOVEMENT. OBSERVATION SHALL CONTINUE DURING CONSTRUCTION OF DIVERSION CHAMBER FOR PURPOSE OF DETECTING ANY BULKHEAD CAP MOVEMENTS.
4. BACKFILL IN FRONT OF SHEETPILING AND AROUND TIE BACK CABLES AS SPECIFIED TO ORIGINAL GROUND SURFACE, EXCEPT IN AREA OF EXCAVATION FOR DIVERSION STRUCTURE.
5. EXCAVATE FOR AND COMPLETE DIVERSION STRUCTURE. BOTH TEMPORARY TIE BACKS AND EXISTING TIE RODS AND ANCHOR MUST BE PROTECTED AGAINST DAMAGE, AND WILL BE CONSIDERED EXISTING STRUCTURES. NOTE EVCAVATION LIMIT FOR DIVERSION STRUCTURE.
6. COMPLETE BACKFILL AROUND DIVERSION STRUCTURE TO LEVEL OF TIEBACK CABLES, AS AS SPECIFIED. AFTER BACKFILL IS APPROVED, RELEASE LOAD IN TIE BACK CABLES AND REMOVE CABLES. WALERS AND SHEET PILING MAY BE LEFT IN PLACE. ALL DRILLED HOLES IN
7. REMOVE THREADED RODS, AND WALERS AND AT BULKHEAD. COMPLETELY FILL DRILLED HOLES IN BULKHEAD CAP WITH APPROVED GROUT. COMPLETE BACKFILLING AND RESTORE GROUND SURFACE, AS SPECIFIED. FILL IN STRUCTURE, RELEASE LOAD IN TIE BACK CABLES AND REMOVE CABLES. WALERS AND SHEET PILING MAY BE LEFT IN PLACE.

146-43

| GREELEY AND HANSEN ENGINEERS | COMP BY TLW DATE 1-14-76 CKD BY TLW DATE 1-14-76 | PROJECT TAMPA, FLA. DIVISION BI-A W. RIVER INTERCEPTING SEWER REPL. | SUBJECT SUPPLEMENTARY DRAWING NO. S.D.-1 |
|---|---|---|---|

**146-045**

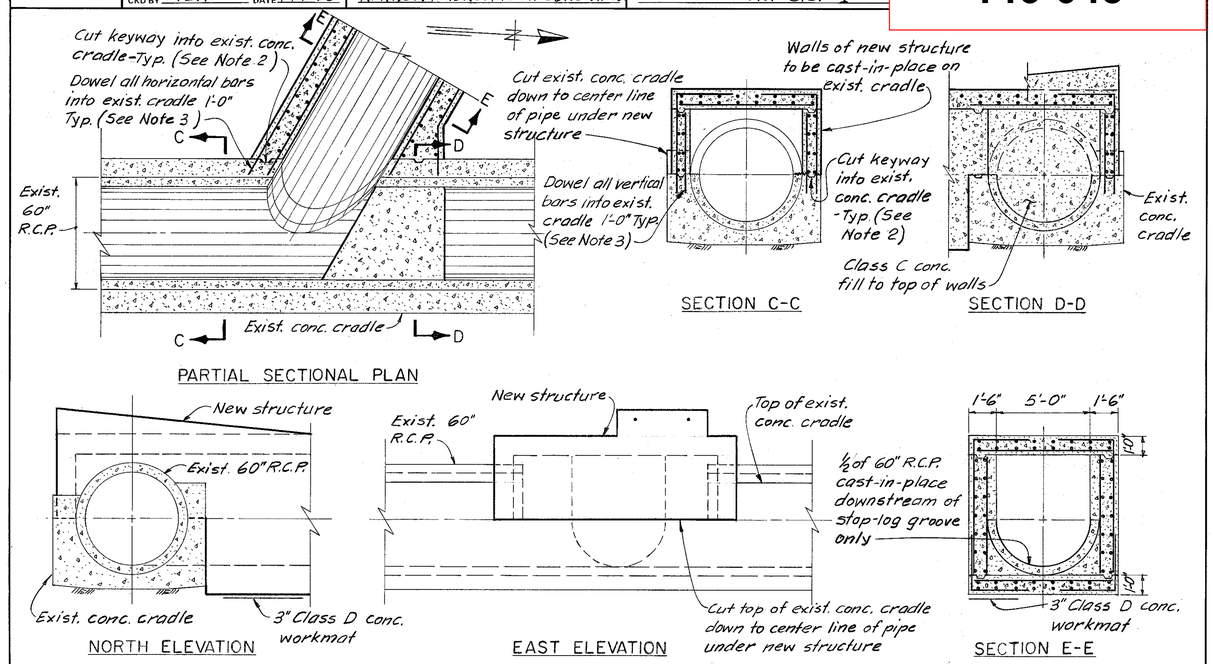


SOUTH DIVERSION STRUCTURE—REVISED PLANS AND SECTIONS
SCALE: 1/4" = 1'-0"

146-45

| GREELEY AND HANSEN ENGINEERS | COMP BY RN DATE 10-17-75 CKD BY JFS DATE 10-17-75 | PROJECT TAMPA FLA. DIVISION BI-A W. RIVER INTERCEPTING SEWER REPL. | SUBJECT DRAWING AD-1-2 TO ACCOMPANY ADDENDUM NO. 1 |
|---|---|---|---|

**146-044**

TEMPORARY TIE-BACK SYSTEM
SOUTH DIVERSION STRUCTURE

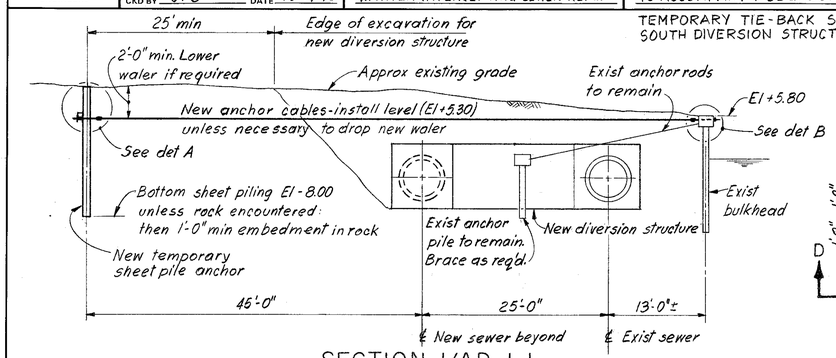


SECTION 1/AD-1-1
SCALE: 1" = 10'

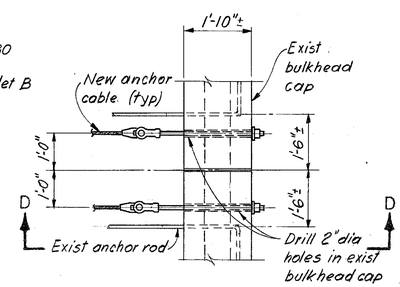


PLAN
SCALE: 1/2" = 1'-0"

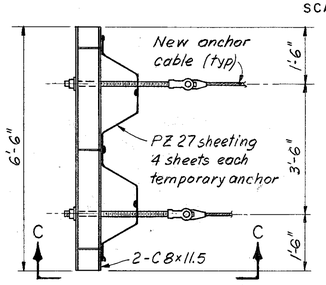


PLAN
SCALE: 1/2" = 1'-0"

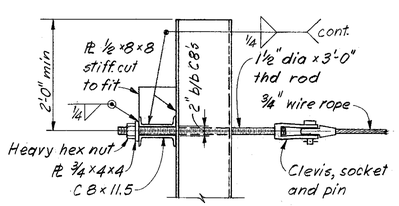


SECTION C
SCALE: 3/4" = 1'-0"

DETAIL A

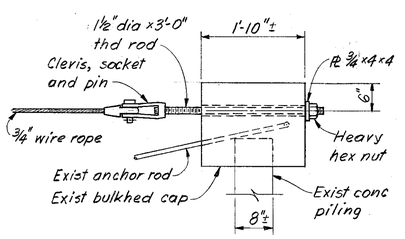


SECTION D
SCALE: 3/4" = 1'-0"

DETAIL B

146-44

| GREELEY AND HANSEN ENGINEERS | COMP BY RN DATE 1-13-76 CKD BY JFS DATE 1-13-76 | PROJECT TAMPA FLA. DIVISION BI-A W. RIVER INTERCEPTING SEWER REPL. | SUBJECT SUPPLEMENTARY DRAWING NO. S.D.-1 |
|---|---|---|---|

**146-046**

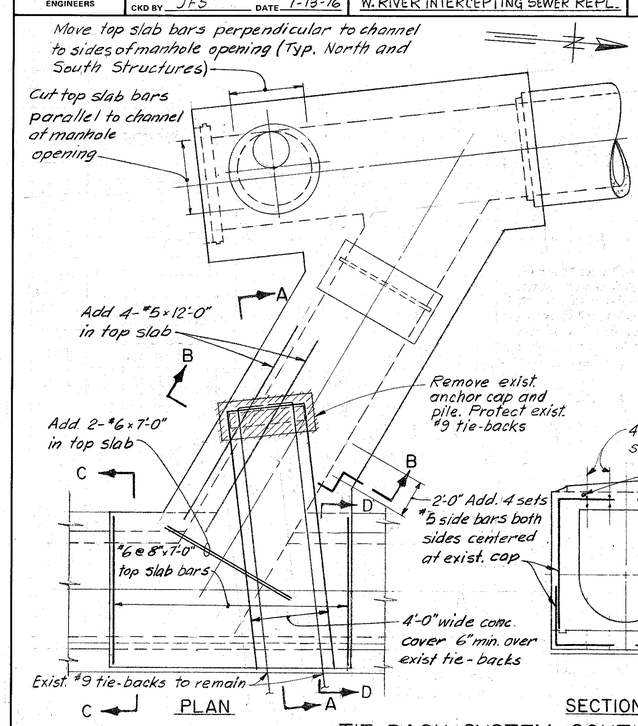


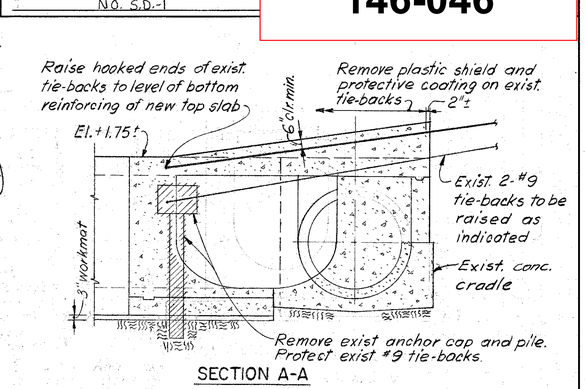


SECTION A-A

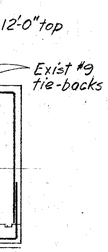


SECTION B-B

GENERAL NOTES:

1. Reinforcing and dimensions not shown shall conform to details shown on Contract Plans, Division BI-A Sheet 4 of 7.
2. Cut continuous keyway along all surfaces of contact between new structure and exist. conc. cradle. Apply Sika "Colma-Fix" to all surfaces of contact in accordance with manufacture's directions.
3. Apply Sika "Colma-Dur" into all holes where reinforcing bars are to be doweled into exist. conc. cradle in accordance with manufacture's directions.

TIE-BACK SYSTEM SOUTH DIVERSION STRUCTURE
SCALE: 1/4" = 1'-0"

146-46

146-047

GREELEY AND HANSEN ENGINEERS

PROJECT DIVISION B1-A WEST RIVER INTERCEPTING SEWER REPLACE.

SUBJECT SUPPLEMENTARY DRAWING NO. S.D.-2
TEMPORARY CHANNEL BARRIER IN SOUTH DIVERSION STRUCTURE

PROJ NO.

CLIENT CITY OF TAMPA

COMP BY TLW DATE 3-29-76 CKD BY DATE

SHEET 1 OF 1

# TEMPORARY CHANNEL BARRIER

N.T.S.

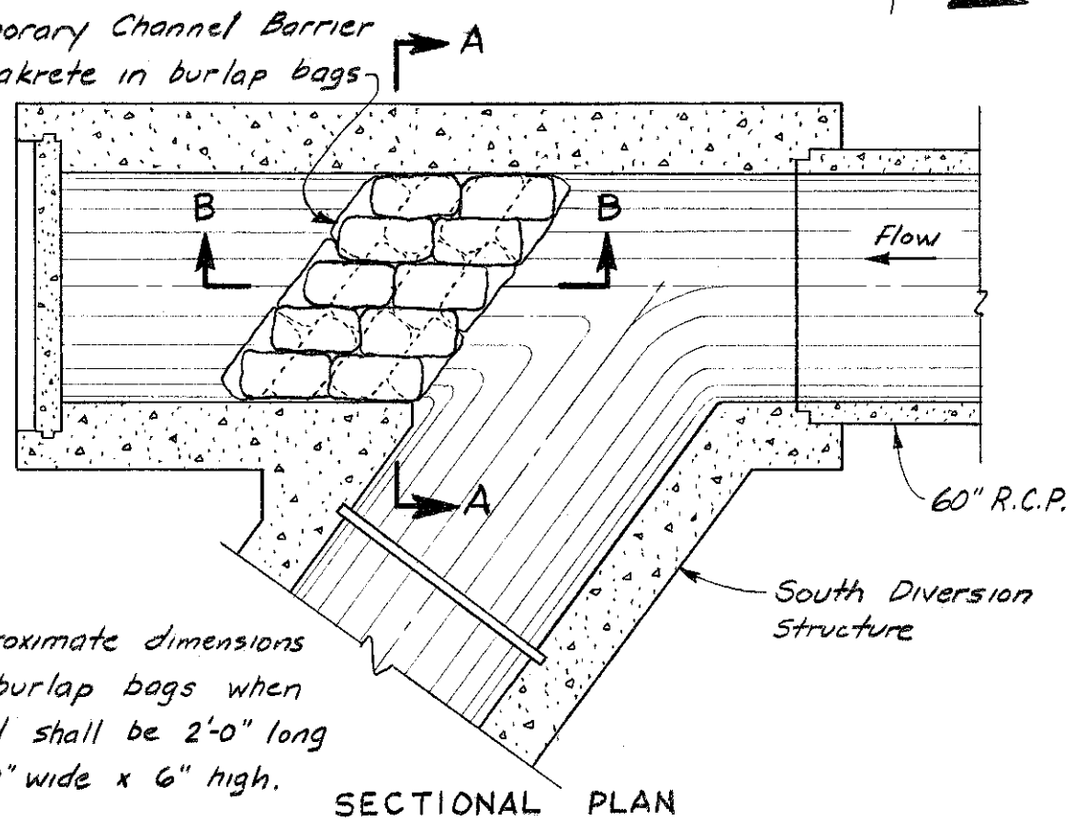


NOTE:
Approximate dimensions of burlap bags when filled shall be 2'-0" long x 1'-0" wide x 6" high.

SECTIONAL PLAN

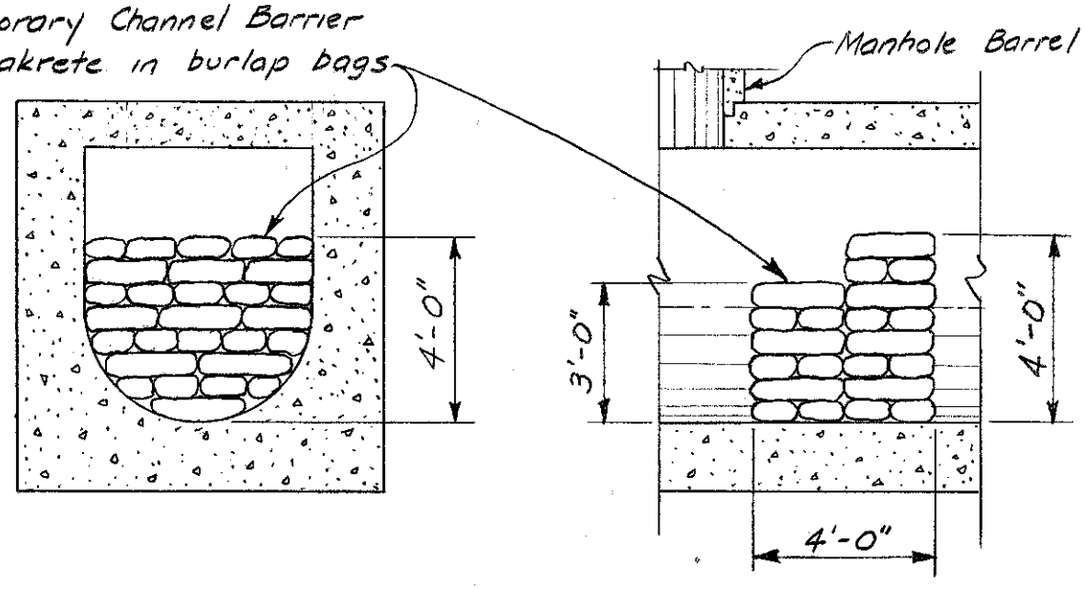


SECTION A-A

SECTION B-B

146-47

210-003

# INDEX MAP

# LEGEND

## EXISTING STRUCTURES AND FEATURES

| | UP TO 36" | 36" AND LARGER |
|---|---|---|
| SANITARY SEWER & MANHOLE | | |
| STORM SEWER & MANHOLES | | |
| SANITARY FORCE MAIN | FM | |
| WATER MAIN | | |
| GAS MAIN & DRIP | | |
| ELECTRIC CABLE OR DUCT | | |
| TELEPHONE CABLE OR DUCT | | |
| FIRE ALARM CABLE | F F | |
| VALVE | | |
| HYDRANT | | |
| CATCH BASIN | CB CB | |
| POLE, POWER OR TELEPHONE | | |
| VALVE VAULT | V | |
| WATER METER | M | |
| ELECTRIC MANHOLE OR VAULT | E | |
| TELEPHONE MANHOLE OR VAULT | T | |
| SPOT ELEVATION | 6.7 (DEPTH AT P.L.) | (WYE IN SEWER) |
| EXISTING HOUSE LATERAL | | |

| | |
|---|---|
| POWER POLE GUY | |
| BUILDING | |
| FENCE | |
| PROPERTY LINE | P.L. |
| PROPERTY CORNERS: | |
| IRON PIPE OR PIN | I.P. |
| CONCRETE MONUMENT | Mon. |
| TREE | |
| HEDGE | |
| RAILROAD TRACKS | |
| LIGHT POLE | LP |
| SIGN OR SIGNAL | S |
| WATER COURSE | |
| PAVEMENT | Pvmnt. |
| RIVER BANK | |
| CABLE MARKER | CM |

## SEWER CONSTRUCTION

IN THIS DIVISION: UP TO 36" | 36" AND LARGER | IN ADJOINING DIVISION:

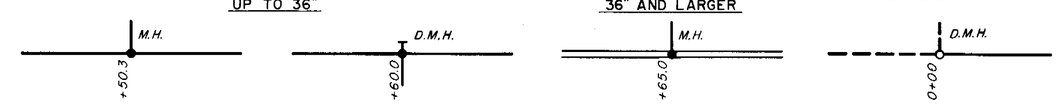


PLAN

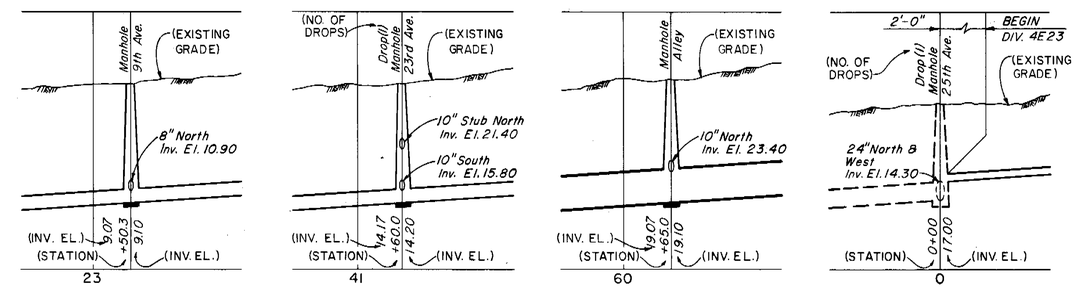


PROFILE

AS BUILT

APPROXIMATE LOCATION OF HOUSE LATERAL AT PROPERTY LINE

SYMBOL FOR TYPE C HOUSE LATERAL T E

| | | | | | |
|---|---|---|---|---|---|
| GREELEY AND HANSEN ENGINEERS, 1211 NORTH WEST SHORE BLVD., TAMPA, FLORIDA 33607 | DESIGNED MDO, RSH | APPROVED | | | |
| | DRAWN AA | DATE DIR., DEPT. OF SANITARY SEWERS | 3 | 8/13/82 | TLW | Rev. Split and Map |
| | CHECKED TLW | DATE GREELEY AND HANSEN, ENGINEERS | 1 | 6/22/82 | TLW | Split into Subdivisions |
| | | | NO. | DATE | APP. | REVISION |

SCALE: 800 0 800 1600 FT. 1" = 800'

CITY OF TAMPA, FLORIDA
SEWAGE DISPOSAL SYSTEM
WEST RIVER INTERCEPTING SEWER REPLACEMENT

DIVISION B1-B
INDEX MAP AND LEGEND
ALL SUBDIVISIONS

PROJ. NO. 2023-400-02-23
SHEET 2 OF 22
DATE MARCH 1981 REV. 2

210-3

210-004

NOTES:

1. All GENERAL NOTES on Sheet 1 and GENERAL NOTES 1, 3 and 4 on Sheet 4 (Addendum No. 2) shall apply to Subdivision D.
2. Contractor shall determine exact location and elevation of existing 48" sanitary sewer at site of New Crossover Structure by survey prior to construction. Exact location of New Crossover Structure and deflection angles at Sta. 0+70.5 and Sta. 1+65.0 will then be determined by the Engineer.
3. Contractor shall remove and replace the following utilities as directed by the Engineer in order to permit construction of the new 60" dia. sanitary sewer:
   a. Light pole at Sta. 0+78±
   b. 15" Storm sewer at Sta. 1+20±
   c. 6" Water main and hydrant at Sta. 1+30±
   d. 8" San. sewer and manhole from Sta. 1+15± to Sta 1+70±
   e. 30" Storm sewer, manhole and laterals from Sta. 6+30± to Sta. 11+40± (Deflect replacement storm sewer around new sanitary sewer manholes)
   f. 8" Water main from Sta. 6+45± to Sta. 11+00±
   g. 15" and 18" Storm sewers and 8" wa[illegible] of Plant Ave. as required for const[illegible]
4. Contractor shall connect replacement sanitary manhole at Sta. 1+15± to new 60" sanitary sewer with 8" V.C.P. and 8" V.C.P. Type C Connection as directed by the Engineer. Existing 8" sanitary sewer north of this connection to be abandoned when new sewer is placed in service.
5. Contractor remove tree at Sta. 2+05± to permit construction and shall replace it with identical species of approved size.
6. Contractor shall connect 12" V.C.P. stub in manhole at Sta. 6+66.5 to 12" V.C.P sanitary sewer constructed by others.

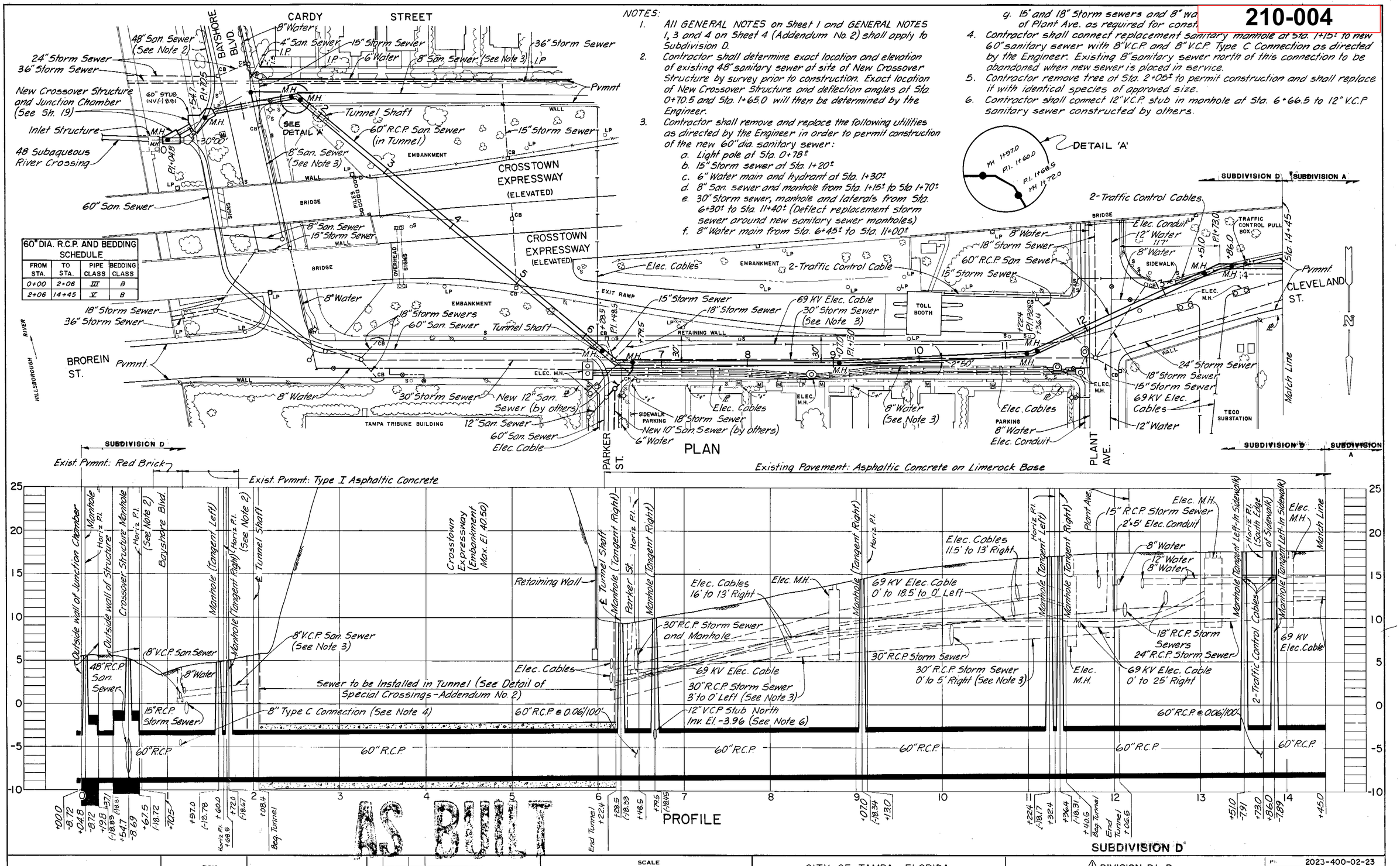


| 60" DIA. R.C.P. AND BEDDING SCHEDULE | | | |
|---|---|---|---|
| FROM STA. | TO STA. | PIPE CLASS | BEDDING CLASS |
| 0+00 | 2+06 | III | B |
| 2+06 | 14+45 | V | B |

GREELEY AND HANSEN
ENGINEERS
1211 NORTH WEST SHORE BLVD.
TAMPA, FLORIDA 33607

DESIGNED RSH
DRAWN AA
CHECKED TLW

APPROVED
SUPT., DEPT. OF SANITARY SEWERS — DATE
GREELEY AND HANSEN, ENGINEERS — DATE

| NO. | DATE | APP. | REVISION |
|---|---|---|---|
| 2 | 11/85 | CB | AS-BUILT PER INSPT PRINTS |
| 1 | 9/10/82 | TLW | Revised Entire Sheet |

SCALE
HORIZ. 1" = 50'
VERT. 1" = 5'

CITY OF TAMPA, FLORIDA
SEWAGE DISPOSAL SYSTEM
WEST RIVER INTERCEPTING SEWER REPLACEMENT

DIVISION B1-B
PLAN AND PROFILE
STA. 0+00 TO STA. 14+45

P.I. 2023-400-02-23
SHEET 3 OF 22
DATE AUG. 1982 REV. 1

210-4

210-005

**GENERAL NOTES: (ALL SUBDIVISIONS)**

1. Utilities not shown on the Plans to be removed and replaced or relocated shall be protected in place. Utilities shown to be removed and replaced or relocated shall be replaced with new materials conforming to the applicable sections of the Workmanship and Materials.
2. Contractors for Subdivisions B and C shall verify invert elevations of exist. 60" sewer or structures (Sta. 58+75.3, 60+00 and 83+00) and shall notify the Engineer of any discrepancies prior to commencing work.
3. The existing 60-inch diameter West River Intercepting Sewer is in a serious state of deterioration. The Contractor shall take all precautions necessary to prevent any damage to the existing sewer and shall be solely responsible to maintain continuous sewage flow during construction.
4. Unless otherwise shown, all 8-inch diameter replacement sewers shall be installed in Class C Bedding.

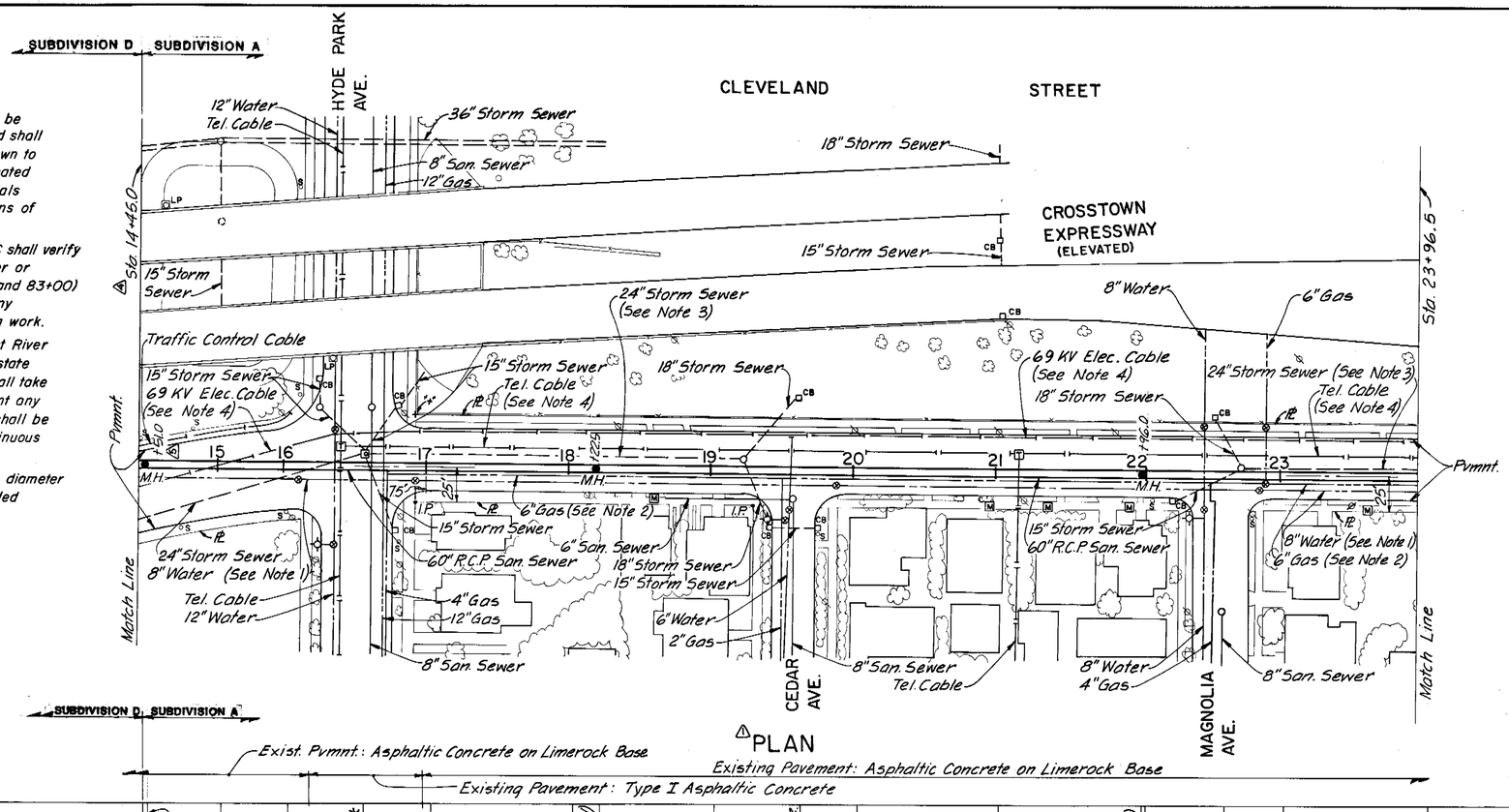


AS BUILT

**SUBDIVISIONS A,B AND C**

| 60" DIA. R.C.P. AND BEDDING SCHEDULE | | | |
|---|---|---|---|
| FROM STATION | TO STATION | PIPE CLASS | BEDDING CLASS |
| △1 14+45 | 75+50 | V | B |
| 75+50 | 83+00 | IV | B |

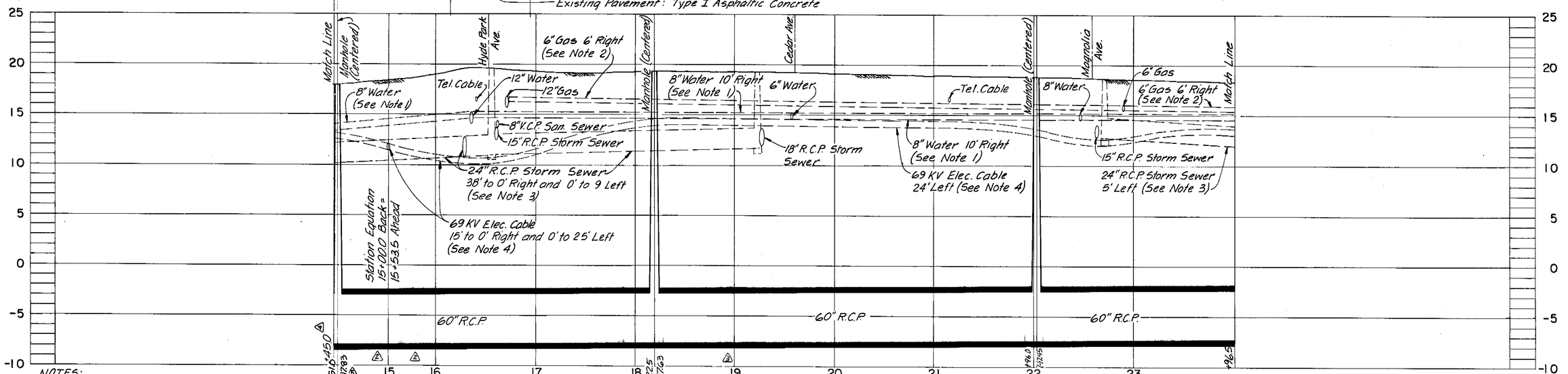


NOTES:

1. Contractor shall remove and relocate existing 8" water in Cleveland St. from Sta. 14+45 to Sta. 23+96.5 as directed by the Engineer to permit construction of the new 60" diameter sanitary sewer.
2. 6" Gas in Cleveland St. to be relocated by others.
3. Contractor shall remove and replace existing 24", 18" and 15" storm sewers and manholes from Sta. 16+00± to Sta. 19+30± and from Sta. 22+50± to Sta. 23+96.5 as required to permit construction of the new 60" R.C.P. San. Sewer.
4. Contractor shall take all precautions necessary to protect the 69 KV electric cable and the telephone cable and manholes in Brorein and Cleveland Streets from any damage or dislodgement.

PROFILE

SUBDIVISION A

| NO. | DATE | APP. | REVISION |
|---|---|---|---|
| 6 | 12/88 | CR | AS-BUILT |
| △5 | 11/29/82 | TLW | Add MH. Sta 14+51.0 |
| △4 | 9/13/82 | TLW | Rev. Match Line & Pipe Schedule |
| △3 | 9/13/82 | TLW | Move M.H. from Sta. 19+93 to 19+19 |
| △2 | 9/13/82 | TLW | Delete M.H. Sta. 14+99 & Sta. 15+83 |
| △1 | 9/13/82 | TLW | Rev. Horiz. Align. Sta. 14+45 to 15+83 |

SCALE: HORIZ. 1" = 50'; VERT. 1" = 5'

GREELEY AND HANSEN ENGINEERS
1211 NORTH WEST SHORE BLVD.
TAMPA, FLORIDA 33607

DESIGNED RSH
DRAWN AA
CHECKED TLW

APPROVED
SUPT., DEPT. OF SANITARY SEWERS — DATE
GREELEY AND HANSEN, ENGINEERS — DATE

CITY OF TAMPA, FLORIDA
SEWAGE DISPOSAL SYSTEM
WEST RIVER INTERCEPTING SEWER REPLACEMENT

DIVISION B1-B
PLAN AND PROFILE
△STA. 14+45 TO STA. 23+96.5

PROJ. NO. 2023-400-02-23
SHEET 4 OF 22
DATE AUG. 1982 REV. 4

210-5

210-006

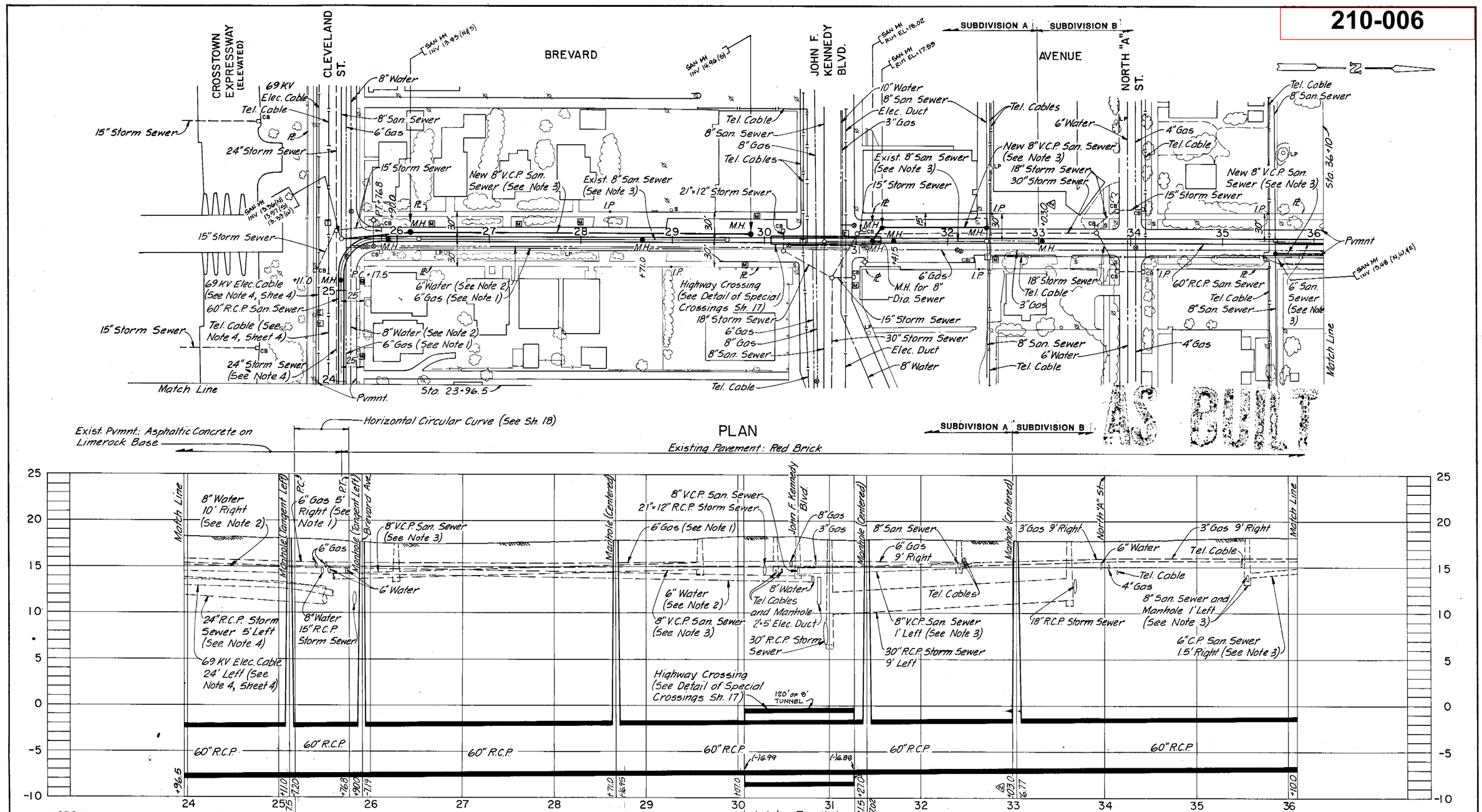


NOTES:

1. 6" Gas mains in Cleveland St. and Brevard Ave. to be relocated by others.
2. Contractor shall remove and relocate existing 8" water in Cleveland St. from Sta. 23+96.5 to 25+50± and 6" water in Brevard Ave. from Sta. 25+50± to Sta. 30+10± as directed by the Engineer to permit construction of the new 60" diameter sanitary sewer.
3. Contractor shall remove existing 8" and 6" diameter sanitary sewers and manholes from Sta. 25+50± to Sta. 29+60±, from Sta. 31+15± to 32+42±, and from Sta. 35+55± to Sta. 36+10 as required to permit construction of the new 60" diameter sanitary sewer and shall construct new 8" diameter V.C.P. replacement sanitary sewer and manholes at original elevations in the locations shown. All existing lateral sewers and house laterals shall be connected to the new 8" replacement sewer. Contractor shall maintain continuous sanitary sewer service during construction by approved temporary methods.
4. Contractor shall remove and replace existing 24" storm sewer from Sta. 23+96.5 to Sta. 25+30± and 30" and 18" storm sewers and manhole from Sta. 31+25± to Sta. 33+70± as required to permit construction of the new 60" R.C.P. San. Sewer.

SUBDIVISIONS A AND B

| | | | | | | | |
|---|---|---|---|---|---|---|---|
| GREELEY AND HANSEN ENGINEERS<br>1211 NORTH WEST SHORE BLVD.<br>TAMPA, FLORIDA 33607 | DESIGNED RSH<br>DRAWN AA<br>CHECKED TLW | APPROVED<br>DATE<br>SUPT., DEPT. OF SANITARY SEWERS<br>DATE<br>GREELEY AND HANSEN, ENGINEERS | 3 | 12/85 | CR | AS-BUILT PER INSPT PRINTS | SCALE<br>50 0 50 100 FT HORIZ. 1" = 50'<br>5 0 5 10 VERT. 1" = 5' |
| | | | 2 | 11/10/82 | TLW | Move M.H. from Sta. 33+90 to 33+04 | |
| | | | 1 | 8/12/82 | TLW | Rev. Align. Sta. 23+96.5 to 31+05 | |
| | | | NO. | DATE | APP. | REVISION | |

CITY OF TAMPA, FLORIDA
SEWAGE DISPOSAL SYSTEM
WEST RIVER INTERCEPTING SEWER REPLACEMENT

DIVISION B1-B
1 PLAN AND PROFILE
STA. 23+96.5 TO STA. 36+10

PROJ. NO. 2023-400-02-23
SHEET 5 OF 22
DATE AUG. 1982 REV. 2

210-6

210-007

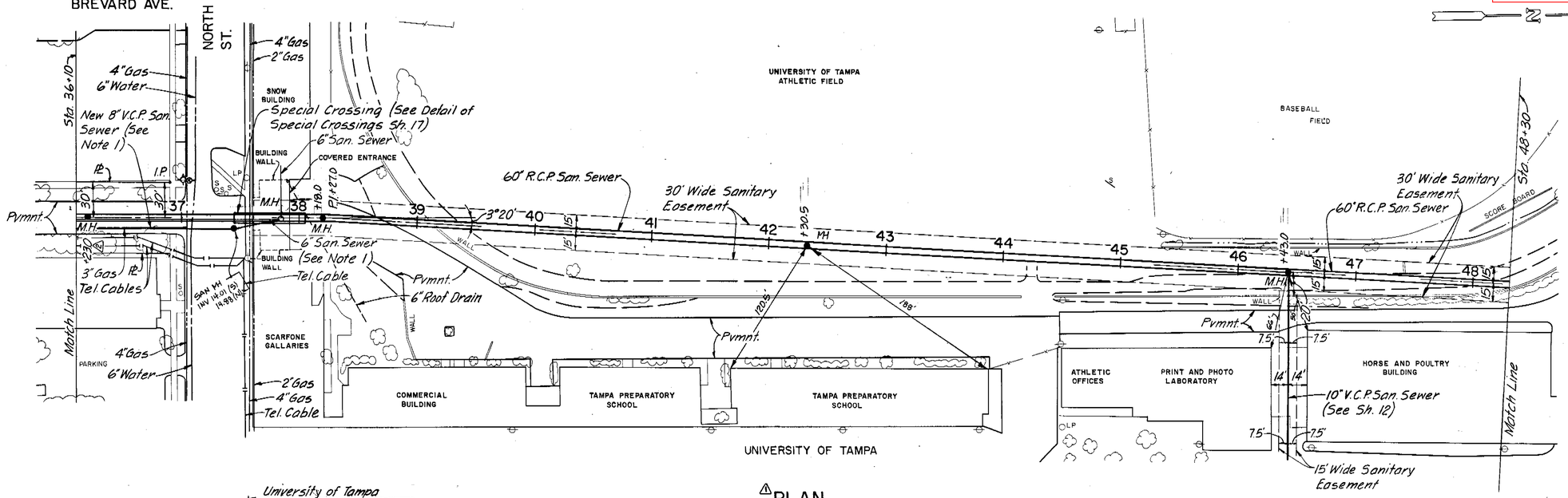


PLAN

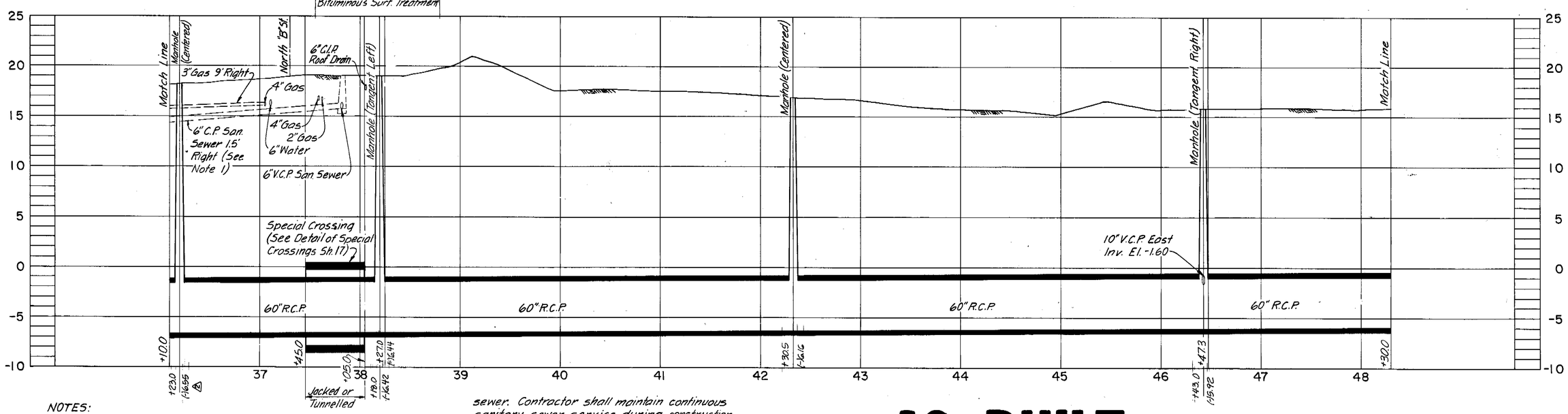


PROFILE

AS BUILT

NOTES:

1. Contractor shall remove existing 6" sanitary sewer and manhole from Sta. 36+10 to Sta. 37+88± to permit construction of new 60" sanitary sewer and shall construct new 8" V.C.P. replacement sanitary sewer and manhole at location shown and at original elevations. All existing house laterals shall be connected to new 8" replacement sewer. Contractor shall maintain continuous sanitary sewer service during construction by approved temporary methods.
2. Contractor shall take all precautions necessary to protect existing Structures above Special Crossing from any damage or movement.

SUBDIVISION B

| | | | | | | |
|---|---|---|---|---|---|---|
| GREELEY AND HANSEN ENGINEERS, 1211 NORTH WEST SHORE BLVD., TAMPA, FLORIDA 33607 | DESIGNED MDO, RSH | APPROVED | 3 | 12/89 | CJ | AS-BUILT PER INSPT PRINTS |
| | DRAWN AA | DIR., DEPT. OF SANITARY SEWERS DATE | 2 | 11/10/82 | TLW | Move M.H. from Sta. 36+96 to 36+20 |
| | CHECKED TLW | GREELEY AND HANSEN, ENGINEERS DATE | 1 | 8/12/82 | TLW | Rev. Align. Sta. 46+42.5 to 48+30 |
| | | | NO. | DATE | APP. | REVISION |

SCALE: HORIZ. 1" = 50' (50 0 50 100 FT); VERT. 1" = 5' (5 0 5 10)

CITY OF TAMPA, FLORIDA
SEWAGE DISPOSAL SYSTEM
WEST RIVER INTERCEPTING SEWER REPLACEMENT

DIVISION B1-B
PLAN AND PROFILE
STA. 36+10 TO STA. 48+30

PROJ. NO. 2023-400-02-23
SHEET 6 OF 22
DATE: MARCH 1981 REV. 2

210-7

AASC. 16943

210-008

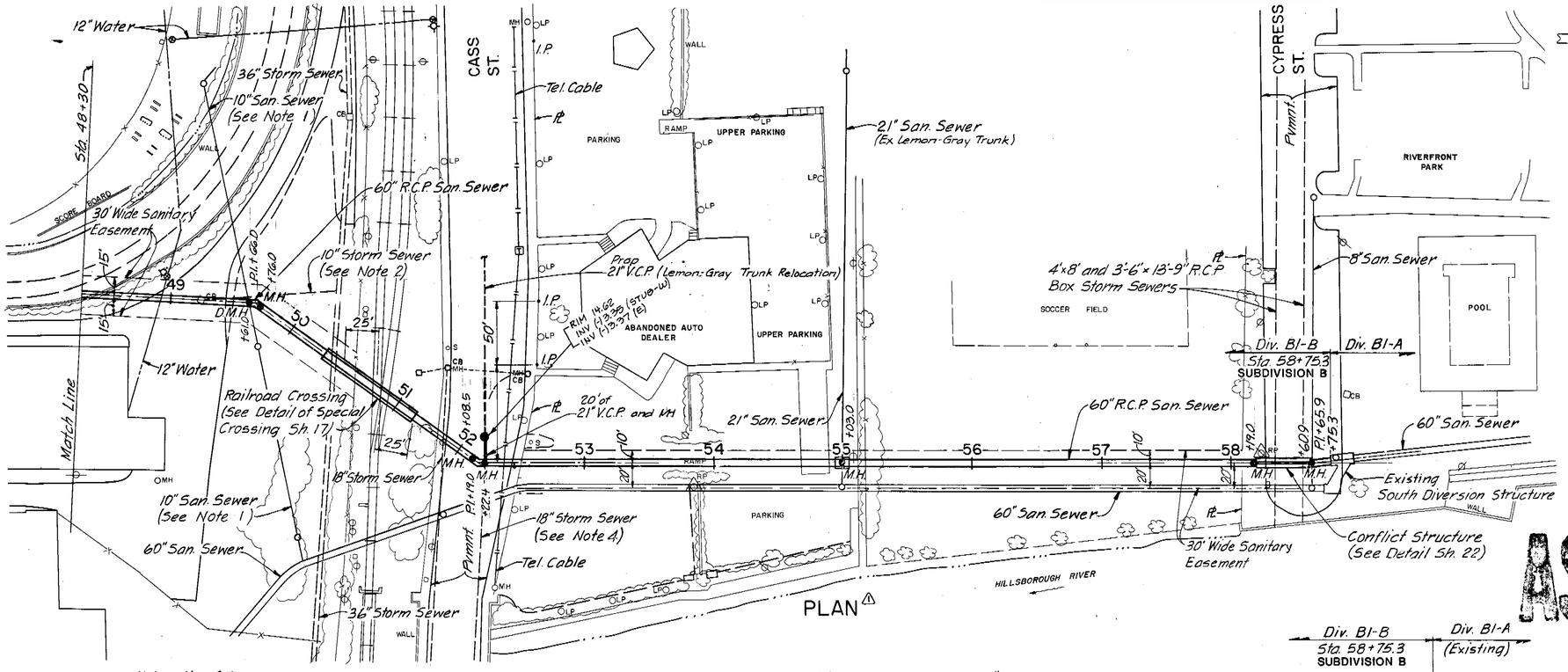


AS BUILT

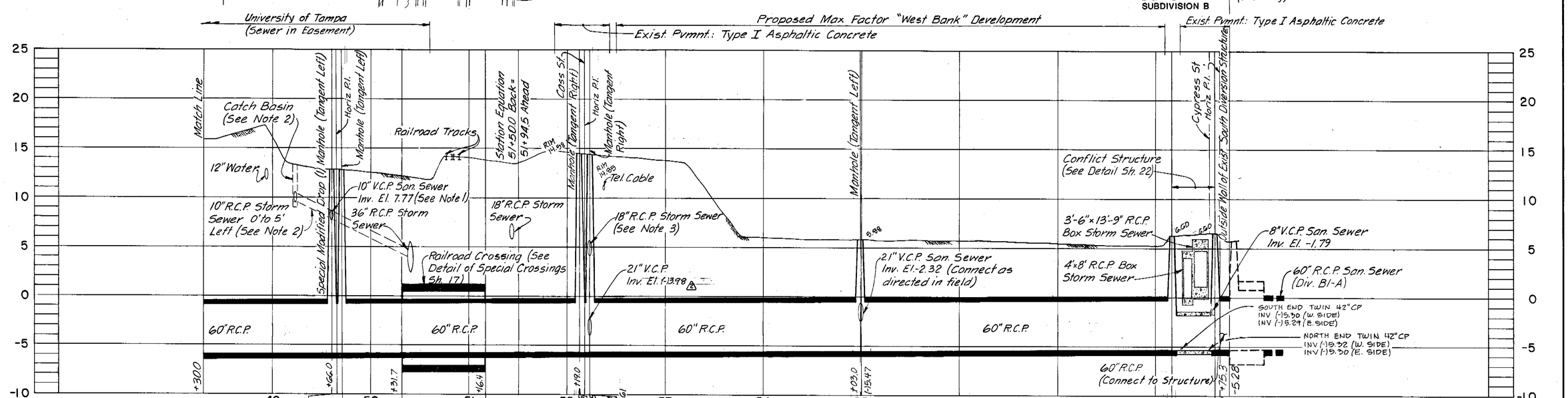


NOTES:

1. Contractor shall construct manhole at Sta. 49+65.1 on existing 10" sanitary sewer. Existing sewer shall pass through center of the new barrel using P.V.C. pipe and adapters as shown for Special Manhole Modifications on Detail Sh. 18.
2. Contractor shall remove and replace 10" storm sewer and catch basin from Sta. 49+23± to Sta. 49+70± as required for construction of the new 60" R.C.P. San. Sewer.
4. Contractor shall remove and replace existing 18" storm sewer at Sta. 52+22± as directed by the Engineer in order to permit construction of the new 60" R.C.P. San. Sewer.

| | | | | | | |
|---|---|---|---|---|---|---|
| GREELEY AND HANSEN ENGINEERS 1211 NORTH WEST SHORE BLVD. TAMPA, FLORIDA 33607 | DESIGNED MDO, RSH<br>DRAWN AA<br>CHECKED TLW | APPROVED<br>DIR., DEPT. OF SANITARY SEWERS DATE<br>GREELEY AND HANSEN, ENGINEERS DATE | NO. | DATE | APP. | REVISION |
| | | | 3 | 12/85 | CJ | AS-BUILT PER INSPT PRINTS |
| | | | 2 | 11/16/82 | TLW | Rev. 21" Stub Elev. at Sta. 52+22 |
| | | | 1 | 8/13/82 | TLW | Rev. Align. Sta. 48+30 to 56+30 |

SCALE: HORIZ. 1" = 50'; VERT. 1" = 5'

CITY OF TAMPA, FLORIDA
SEWAGE DISPOSAL SYSTEM
WEST RIVER INTERCEPTING SEWER REPLACEMENT

DIVISION B1-B
PLAN AND PROFILE
STA. 48+30 TO STA. 58+75.3

PROJ. NO. 2023-400-02-23
SHEET 7 OF 22
DATE MARCH 1981 REV. 2

210-8

AASC 16943

210-009

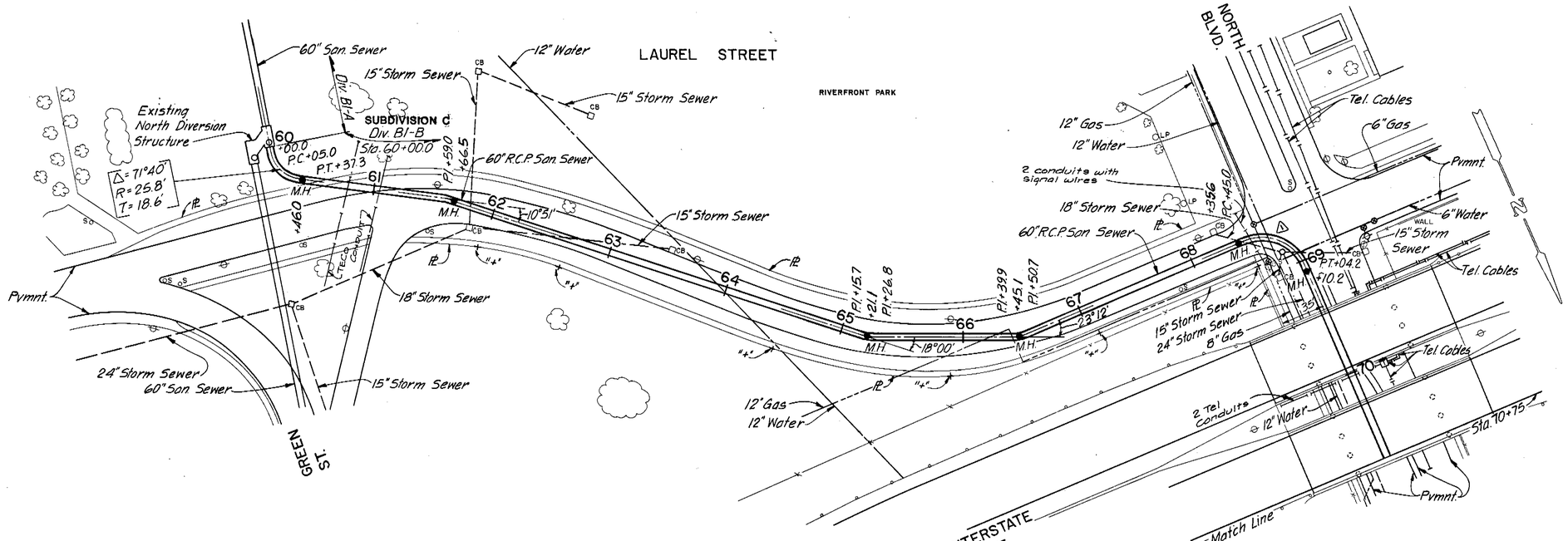


PLAN

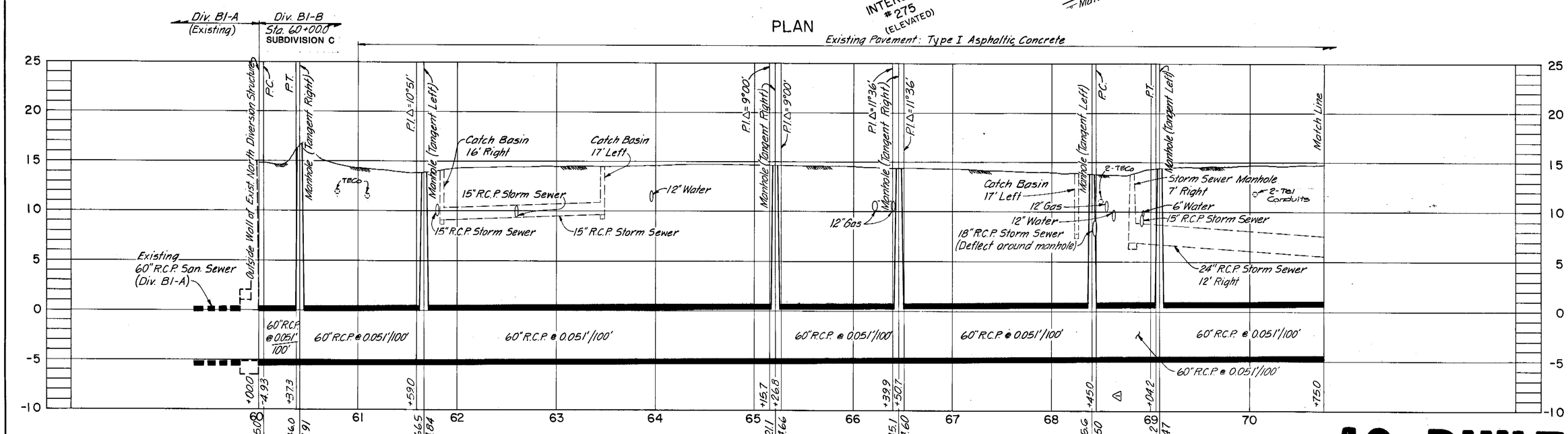


PROFILE

NOTES:

1. Contractor shall remove existing storm sewers and manholes from Sta. 61+80± to Sta. 63+00± and from Sta. 68+35± to Sta. 69+00± as required to permit construction of new 60" sanitary sewer and shall reconstruct these facilities at their original elevations and locations.

AS BUILT

SUBDIVISION C

| | | | | | | |
|---|---|---|---|---|---|---|
| GREELEY AND HANSEN ENGINEERS, 1211 NORTH WEST SHORE BLVD., TAMPA, FLORIDA 33607 | DESIGNED MDO<br>DRAWN AA<br>CHECKED TLW | APPROVED<br>DATE<br>DIR., DEPT. OF SANITARY SEWERS<br>DATE<br>GREELEY AND HANSEN, ENGINEERS | NO. 2 DATE 12/85 APP. CJ REVISION: AS-BUILT PER INSPT PRINTS<br>NO. 1 DATE 8/13/82 APP. TLW REVISION: Delete M.H. at Sta. 68+74.6 | SCALE: HORIZ. 1" = 50'; VERT. 1" = 5' | CITY OF TAMPA, FLORIDA<br>SEWAGE DISPOSAL SYSTEM<br>WEST RIVER INTERCEPTING SEWER REPLACEMENT | DIVISION B1-B<br>PLAN AND PROFILE<br>STA. 60+00 TO STA. 70+75 | PROJ. NO. 2023-400-02-23<br>SHEET 8 OF 22<br>DATE MARCH 1981 REV. 1 |

210-9

AASC 16943

210-010

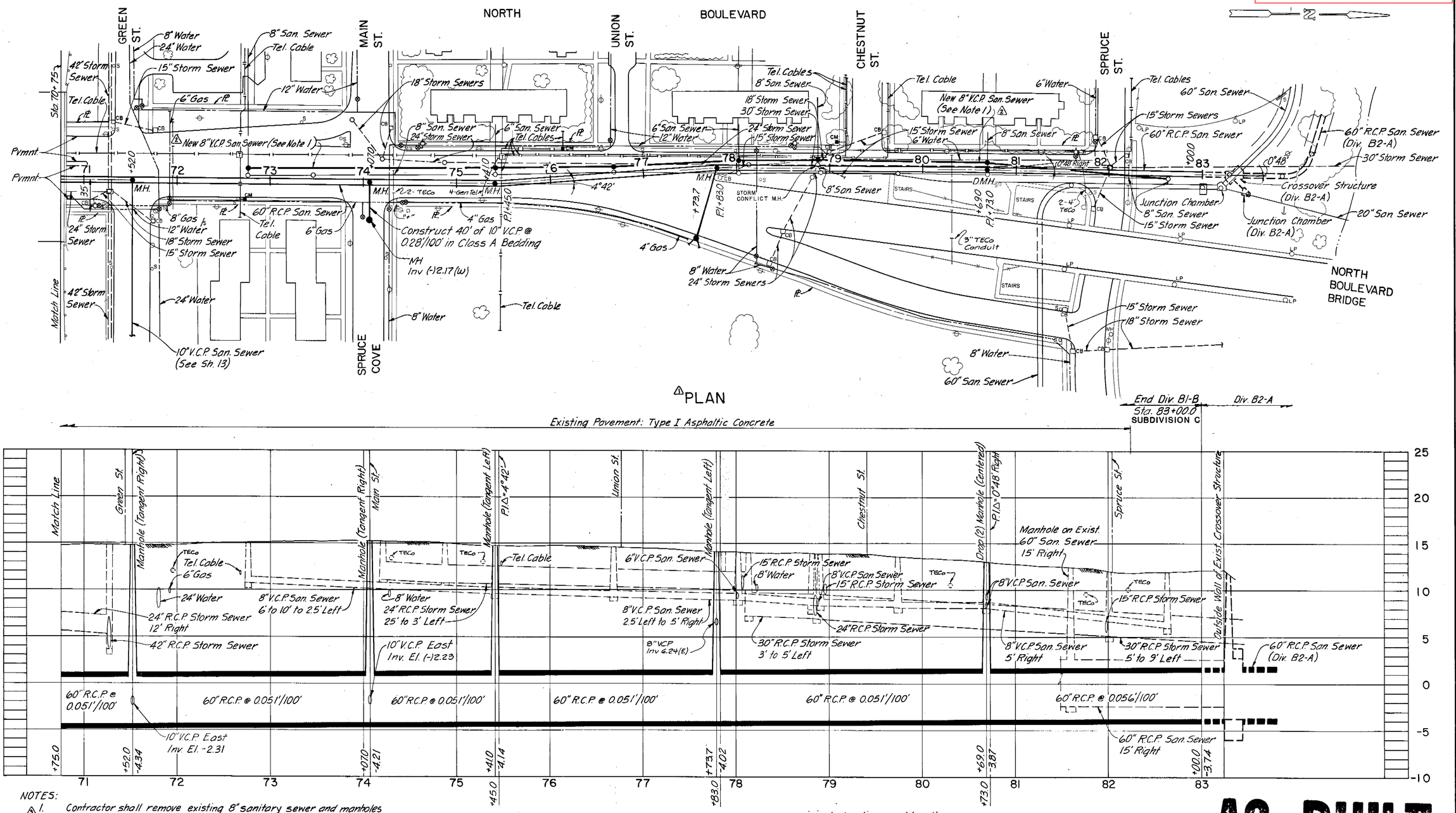





NOTES:

1. Contractor shall remove existing 8" sanitary sewer and manholes from Sta. 72+75± to Sta. 82+65± to permit construction of new 60" sanitary sewer and shall construct new 8" V.C.P. replacement sanitary sewer and manholes at the location shown and directed. Elevations to be provided by Supplemental Drawing. All existing lateral sewers and house laterals shall be connected to new 8" replacement sewer. Contractor shall maintain continuous sanitary sewer service during construction by approved temporary methods.

2. Contractor shall remove existing 24" and 30" storm sewer, manholes and connecting sewers as required to construct new 60" sanitary sewer from Sta. 77+00± to Sta. 83+00±, and shall replace these facilities at their original elevations and locations.

3. Contractor shall remove and replace existing 6" water from Sta. 79+00± to Sta. 81+85± as required to permit construction of new 60" and 8" sanitary sewers and replacement storm sewer.

AS BUILT

SUBDIVISION C

| | | | | | | | |
|---|---|---|---|---|---|---|---|
| GREELEY AND HANSEN ENGINEERS, 1211 NORTH WEST SHORE BLVD., TAMPA, FLORIDA 33607 | DESIGNED MDO | APPROVED | 4 | 12/00 | CJ | AS-BUILT PER INSPT PRINTS | SCALE: 50 0 50 100 FT HORIZ. 1" = 50'; 5 0 5 10 VERT. 1" = 5' |
| | DRAWN AA | DIR., DEPT. OF SANITARY SEWERS DATE | 3 | 8/19/82 | TLW | Rev. Note 1, Add Note 3 | CITY OF TAMPA, FLORIDA — SEWAGE DISPOSAL SYSTEM — WEST RIVER INTERCEPTING SEWER REPLACEMENT |
| | CHECKED TLW | DATE GREELEY AND HANSEN, ENGINEERS | 2 | 8/19/82 | TLW | Add 8" Replacement Sewer | DIVISION B1-B — PLAN AND PROFILE — STA. 70+75 TO STA. 83+00 |
| | | | 1 | 8/13/82 | TLW | Rev. End of Division | PROJ. NO. 2023-400-02-23 |
| | | | NO. | DATE | APP. | REVISION | SHEET 9 OF 22 — DATE MARCH 1981 — REV. 3 |

210-10 AASC 16943

210-011

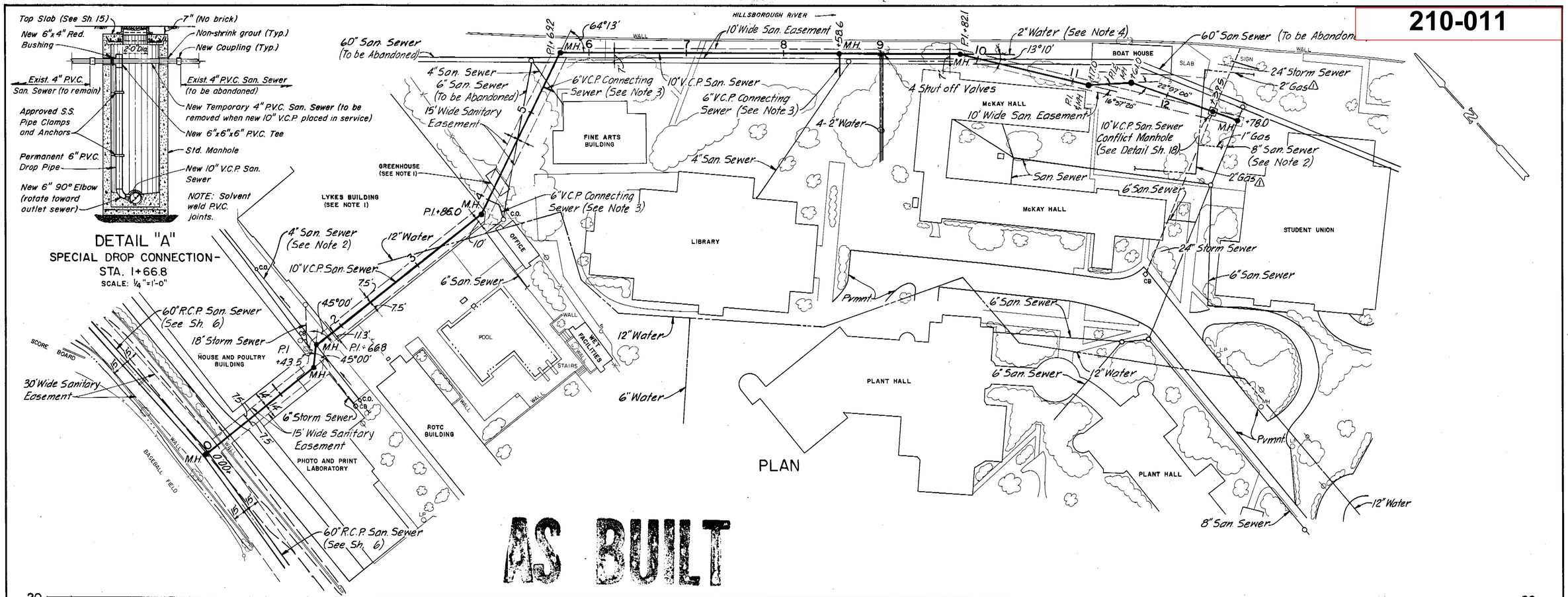


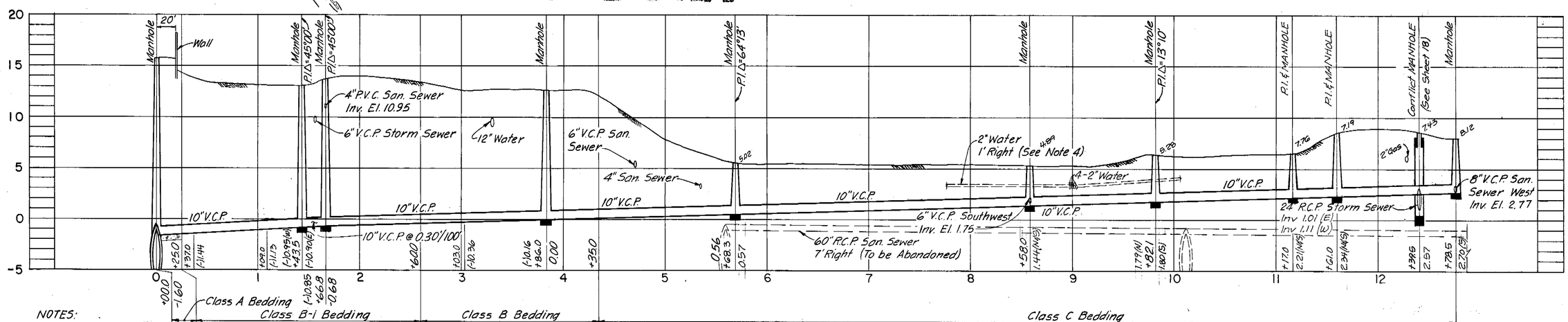


NOTES:

1. Lykes Building and Greenhouse to be demolished by others prior to construction of this replacement sewer.
2. Contractor shall construct manhole at Sta. 1+66.8 on existing 4" sanitary sewer as shown in Detail "A" this sheet. Contractor shall construct manhole at Sta. 12+76.8 on existing sewer with temporary channel to allow sewage to continue through existing 8" sewer. When new 10" replacement sewer is placed in service, Contractor shall construct permanent channel in manhole to divert sewage into new replacement sewer and shall plug the existing sewer at the downstream connection to the manhole with Class D concrete as directed by the Engineer.
3. Contractor shall construct 6" V.C.P. connecting sewers at Stations 4+00.0, 9+30.0 and 8+58.6 (Manhole) as shown and directed after new 10" replacement sewer is placed in service.
4. 2" Water service for sprinkler system shall be removed and replaced to allow construction of new 10" sewer.

SUBDIVISION B

| | | | | | | | |
|---|---|---|---|---|---|---|---|
| GREELEY AND HANSEN ENGINEERS, 1211 NORTH WEST SHORE BLVD., TAMPA, FLORIDA 33607 | DESIGNED MDO<br>DRAWN AA<br>CHECKED TLW | APPROVED<br>DIR., DEPT. OF SANITARY SEWERS DATE<br>GREELEY AND HANSEN, ENGINEERS DATE | NO. | DATE | APP. | REVISION | SCALE: HORIZ. 1" = 50'; VERT. 1" = 5' |
| | | | 2 | 12/85 | CJ | AS BUILT PER INSPT PRINTS | |
| | | | 1 | 11/17/82 | TLW | Added 2" Gas at Sta. 12+35 | |

CITY OF TAMPA, FLORIDA
SEWAGE DISPOSAL SYSTEM
WEST RIVER INTERCEPTING SEWER REPLACEMENT

DIVISION BI-B
PLAN AND PROFILE-REPLACEMENT SEWERS
UNIVERSITY OF TAMPA REPLACEMENT SEWER

PROJ. NO. 2023-400-02-23
SHEET 12 OF 22
DATE MARCH 1981 REV. 2

210-11 AASC 16943

210-012

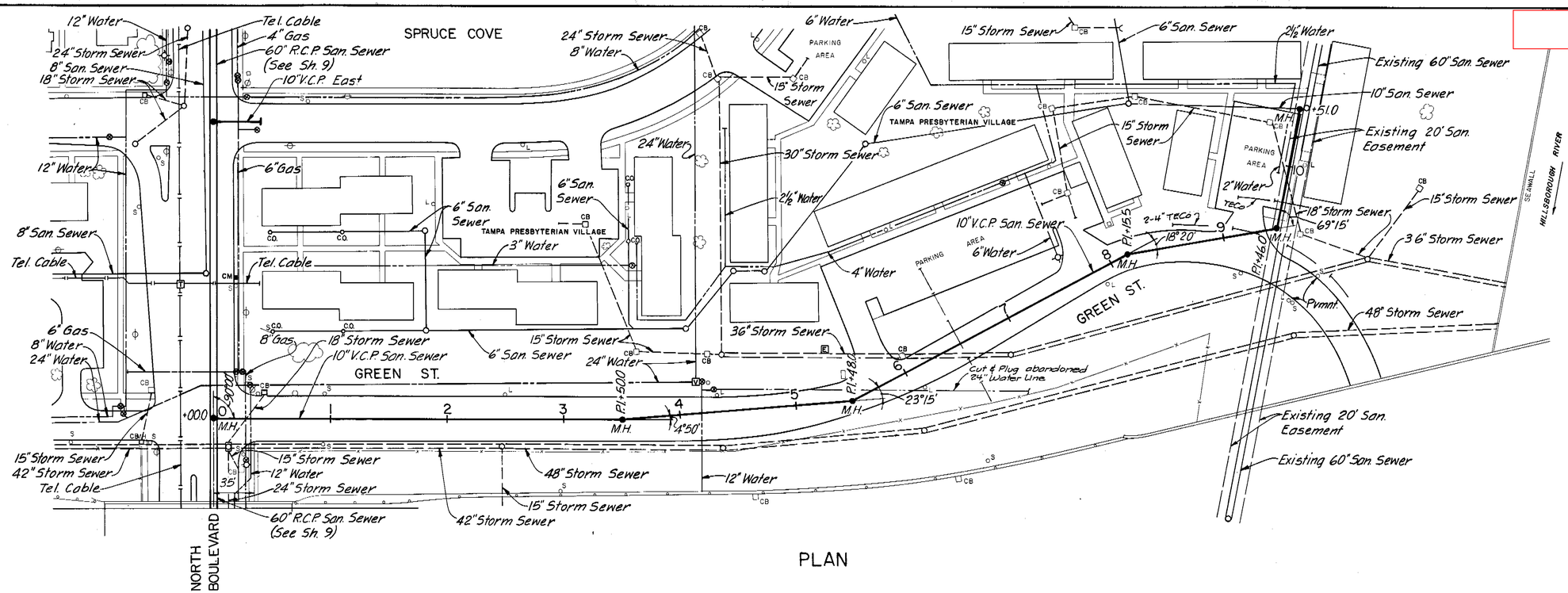


PLAN

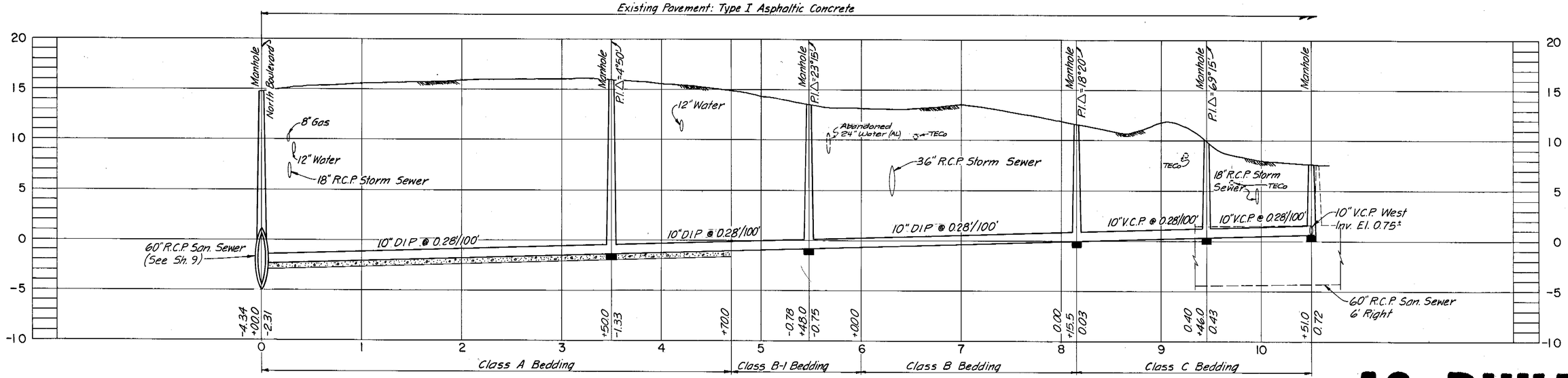


PROFILE

AS BUILT

SUBDIVISION C

| | | | | | | | |
|---|---|---|---|---|---|---|---|
| GREELEY AND HANSEN ENGINEERS<br>1211 NORTH WEST SHORE BLVD.<br>TAMPA, FLORIDA 33607 | DESIGNED MDO<br>DRAWN AA<br>CHECKED TLW | APPROVED<br>DIR., DEPT. OF SANITARY SEWERS DATE<br>GREELEY AND HANSEN, ENGINEERS DATE | NO. 1 / DATE 12/85 / APP. CJ / REVISION: AS-BUILT PER INSPT PRINTS | SCALE<br>HORIZ. 1" = 50'<br>VERT. 1" = 5' | CITY OF TAMPA, FLORIDA<br>SEWAGE DISPOSAL SYSTEM<br>WEST RIVER INTERCEPTING SEWER REPLACEMENT | DIVISION B1-B<br>PLAN AND PROFILE-REPLACEMENT SEWERS<br>GREEN ST.-NORTH BOULEVARD TO STA. 10+51 | PROJ. NO. 2023-400-02-23<br>SHEET 13 OF 22<br>DATE MARCH 1981 REV. 0 |

210-12 A.A.S.C. 17943

210-013

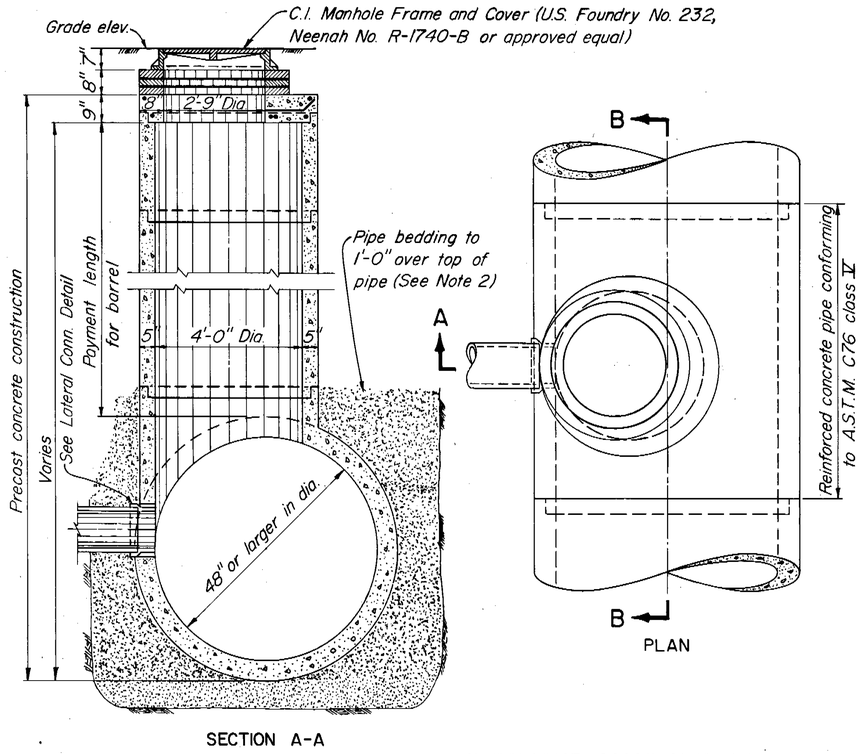


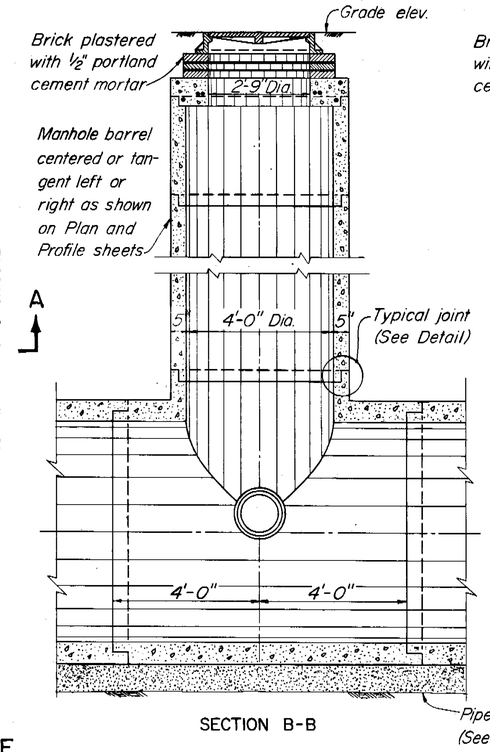


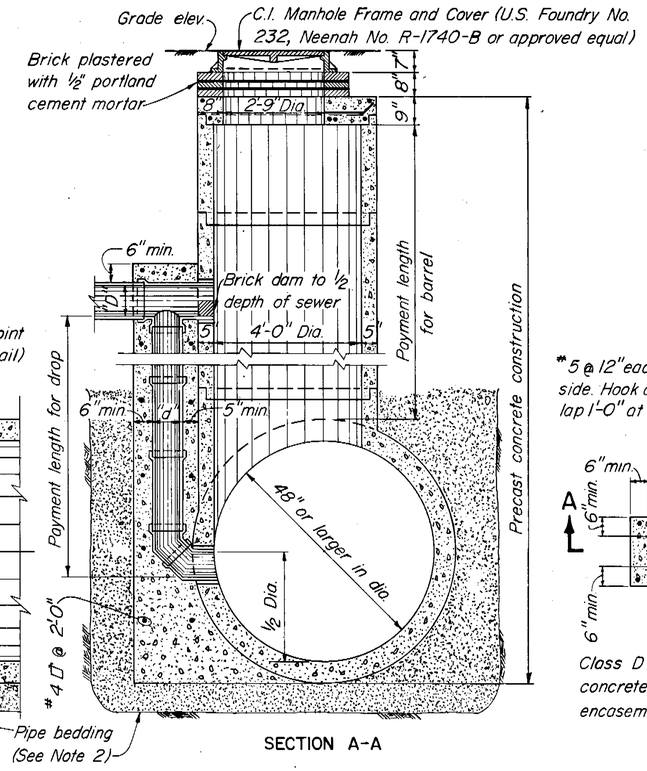


| SCHEDULE FOR DROP MANHOLE | |
|---|---|
| INLET PIPE DIAMETER "D" | DROP PIPE DIAMETER "d" |
| 8" | 8" |
| 10" | 8" |
| 12" | 10" |
| 15" | 12" |
| 18" | 15" |
| 21" | 18" |
| 24" | 18" |

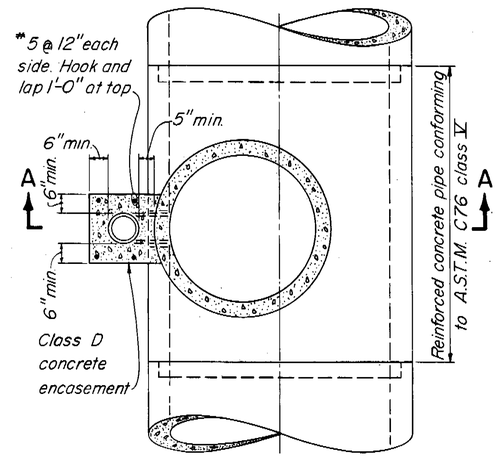


## STANDARD MANHOLE-DEEP TYPE

FOR SEWERS 48" OR LARGER IN DIAMETER

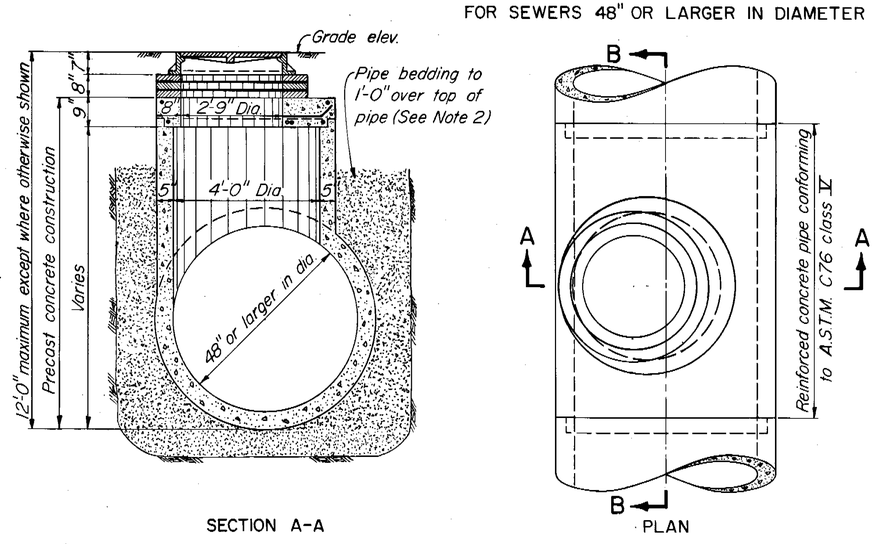


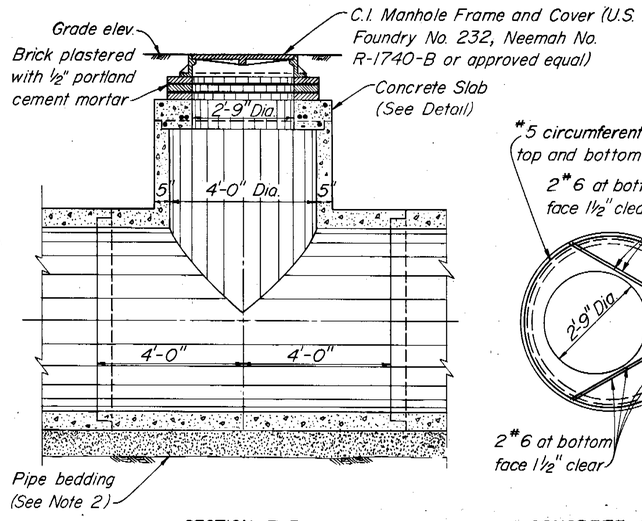


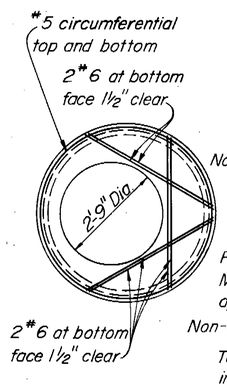


## STANDARD DROP MANHOLE

FOR SEWERS 48" OR LARGER IN DIAMETER

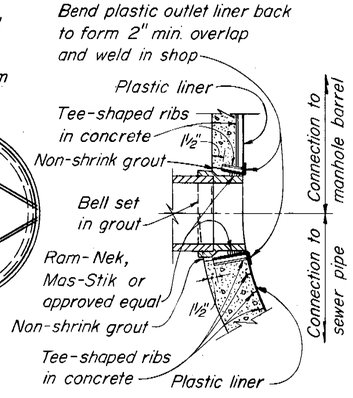


LATERAL CONNECTION DETAIL

NOT TO SCALE

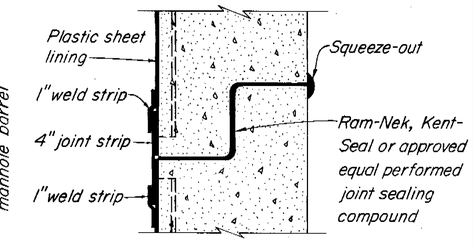


MANHOLE BARREL JOINT DETAIL

NOT TO SCALE

NOTES:

1. All pipe stubs from manholes for future connections or connections to other Contract Divisions shall be provided with water tight plugs placed from within the manhole.
2. See Specifications for materials requirements and placement and compaction of pipe bedding and limestone screenings.

## STANDARD MANHOLE-SHALLOW TYPE

FOR SEWERS 48" OR LARGER IN DIAMETER

AS BUILT

| | | | | | | |
|---|---|---|---|---|---|---|
| GREELEY AND HANSEN ENGINEERS, 1211 NORTH WEST SHORE BLVD. TAMPA, FLORIDA 33607 | DESIGNED T.L.W. DRAWN A.A. CHECKED T.L.W. | APPROVED ____ DATE ____ DIR., DEPT. OF SANITARY SEWERS ____ DATE ____ GREELEY AND HANSEN, ENGINEERS | NO. DATE APP. REVISION | SCALE 1 0 1 2 3 4 5 FT 1/2" = 1'-0" | CITY OF TAMPA, FLORIDA SEWAGE DISPOSAL SYSTEM WEST RIVER INTERCEPTING SEWER REPLACEMENT | DIVISION BI-B STANDARD MANHOLE DETAILS FOR SEWERS 48" OR LARGER IN DIAMETER | PROJ. NO 2023-400-02-23 SHEET 14 OF 22 DATE MARCH 1981 REV. 0 |

210-13

210-014

| SCHEDULE FOR DROP MANHOLE | |
|---|---|
| INLET PIPE DIAMETER "D" | DROP PIPE DIAMETER "d" |
| 8" | 8" |
| 10" | 8" |
| 12" | 10" |
| 15" | 12" |
| 18" | 15" |
| 21" | 18" |
| 24" | 18" |

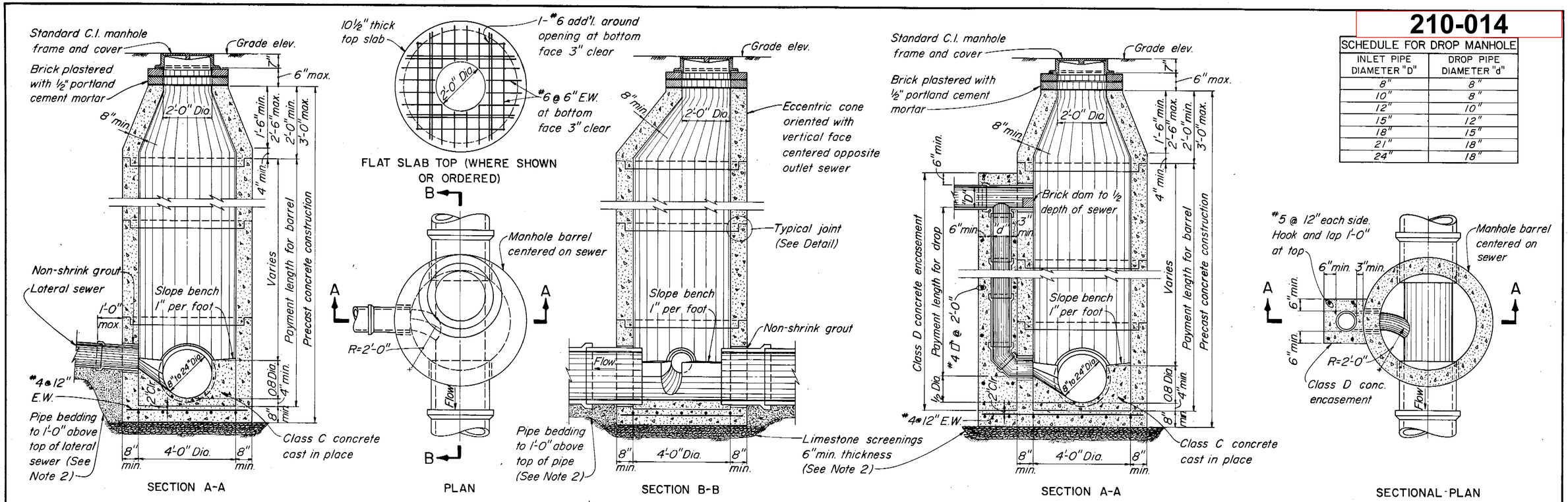


STANDARD MANHOLE-DEEP TYPE
FOR SEWERS 24" OR LESS IN DIAMETER

STANDARD DROP MANHOLE
FOR SEWERS 24" OR LESS IN DIAMETER

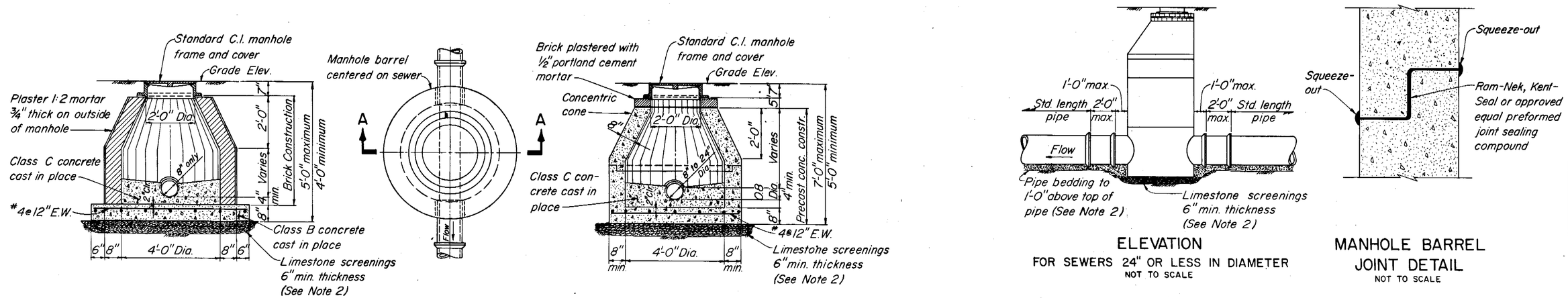


STANDARD MANHOLE-SHALLOW TYPE
FOR SEWERS 24" OR LESS IN DIAMETER

AS BUILT

NOTES:

1. All pipe stubs from manholes for future connections or connections to other Contract Divisions shall be provided with water tight plugs placed from within the manhole.
2. See Specifications for materials requirements and placement and compaction of pipe bedding and limestone screenings.

| | | | | | |
|---|---|---|---|---|---|
| GREELEY AND HANSEN ENGINEERS, 121 NORTH WEST SHORE BLVD. TAMPA, FLORIDA 33607 | DESIGNED TLW<br>DRAWN AA<br>CHECKED TLW | APPROVED<br>SUPT., DEPT. OF SANITARY SEWERS DATE<br>GREELEY AND HANSEN, ENGINEERS DATE | NO. DATE APP. REVISION | SCALE 1 0 1 2 3 4 5 FT 1/2"=1'-0" | CITY OF TAMPA, FLORIDA<br>SEWAGE DISPOSAL SYSTEM<br>WEST RIVER INTERCEPTING SEWER REPLACEMENT |

DIVISION BI-B
STANDARD MANHOLE DETAILS
FOR SEWERS 24" OR LESS IN DIAMETER

PROJ. NO. 2023-400-02-23
SHEET 15 OF 22
DATE MARCH 1981 REV. 0

210-14

210-016

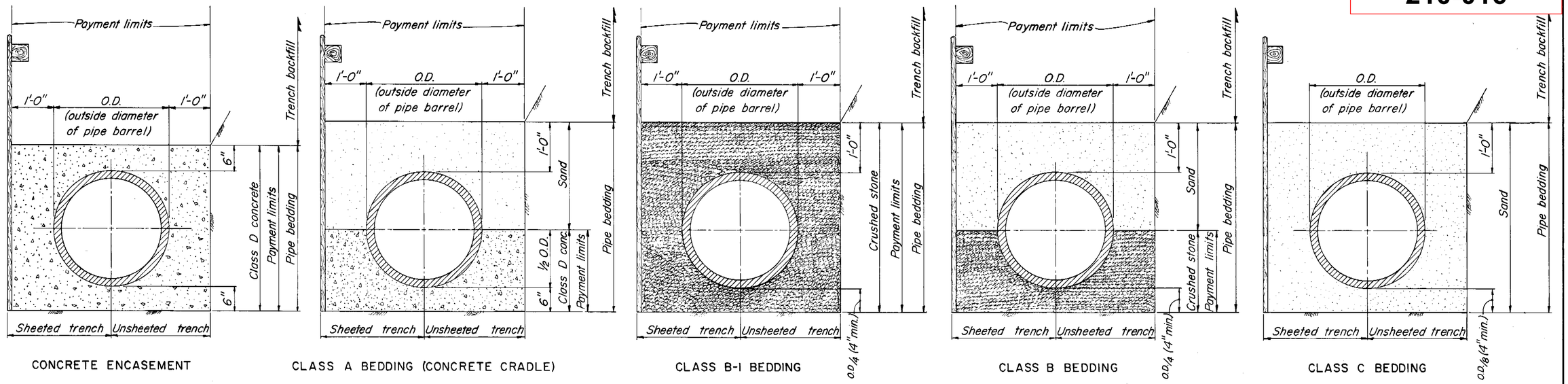


CONCRETE ENCASEMENT

CLASS A BEDDING (CONCRETE CRADLE)

CLASS B-1 BEDDING

CLASS B BEDDING

CLASS C BEDDING

## PIPE BEDDING DETAILS

NOT TO SCALE

NOTES: 1. All types of pipe bedding shall extend to undisturbed earth at the sides and bottom of the trench.
2. Sand and crushed stone pipe bedding shall be placed and compacted in accordance with Specifications.

| QUANTITIES FOR PAYMENT FOR ADDITIONAL PIPE BEDDING MATERIALS ORDERED IN WRITING BY THE ENGINEER | | | | | | | | | | | | | | | | | | | | |
|---|---|---|---|---|---|---|---|---|---|---|---|---|---|---|---|---|---|---|---|---|
| NOMINAL INSIDE PIPE DIAMETER (INCHES) | 6 | 8 | 10 | 12 | 14 | 15 | 16 | 18 | 20 | 21 | 24 | 27 | 30 | 36 | 42 | 48 | 54 | 60 | 66 | 72 |
| CUBIC YARDS OF CONCRETE PER LINEAR FOOT OF PIPE IN CONCRETE ENCASEMENT | 0.141 | 0.167 | 0.191 | 0.216 | 0.229 | 0.256 | 0.252 | 0.299 | 0.300 | 0.340 | 0.383 | 0.427 | 0.472 | 0.588 | 0.690 | 0.797 | 0.909 | 1.027 | 1.150 | 1.279 |
| CUBIC YARDS OF CONCRETE PER LINEAR FOOT OF PIPE IN CLASS A BEDDING (CONCRETE CRADLE) | 0.071 | 0.084 | 0.096 | 0.108 | 0.115 | 0.128 | 0.126 | 0.150 | 0.150 | 0.170 | 0.192 | 0.214 | 0.236 | 0.294 | 0.345 | 0.399 | 0.455 | 0.514 | 0.575 | 0.640 |
| CUBIC YARDS OF CRUSHED STONE PER LINEAR FOOT OF PIPE IN CLASS B BEDDING | 0.055 | 0.066 | 0.078 | 0.088 | 0.094 | 0.111 | 0.108 | 0.143 | 0.143 | 0.173 | 0.207 | 0.243 | 0.280 | 0.381 | 0.475 | 0.578 | 0.690 | 0.810 | 0.939 | 1.078 |
| CUBIC YARDS OF CRUSHED STONE PER LINEAR FOOT OF PIPE IN CLASS B-1 BEDDING | 0.172 | 0.201 | 0.228 | 0.255 | 0.269 | 0.304 | 0.298 | 0.362 | 0.363 | 0.419 | 0.479 | 0.542 | 0.608 | 0.781 | 0.936 | 1.103 | 1.281 | 1.471 | 1.673 | 1.887 |

AS BUILT

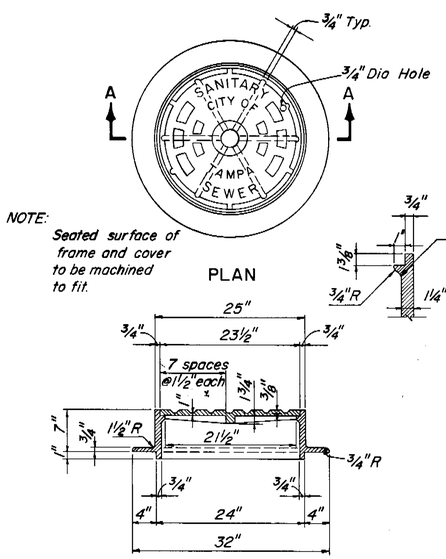


NOTE:
Seated surface of frame and cover to be machined to fit.

PLAN

SECTION A-A

## CAST IRON MANHOLE FRAME & COVER

FOR MANHOLES ON SEWERS 24" OR LESS IN DIAMETER

Approx. Wt.= 380#

SCALE: 1"=1'-0"

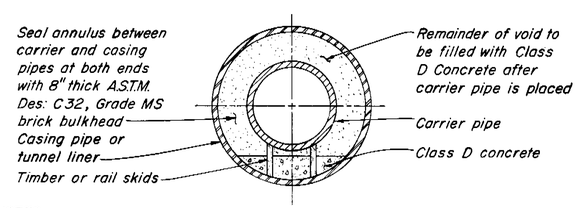


NOTES:
1. All casing pipes shall be welded steel pipe conforming to A.S.T.M. Des. A139 or tongue and groove reinforced concrete pipe conforming to A.S.T.M. Des. C76, class V.
2. The "minimum inside diameter" for tunnel liner shall be the clear diameter.

| CORRESPONDING CARRIER AND CASING PIPE SIZES | | | | | | | | | | | | | | | | | | | | |
|---|---|---|---|---|---|---|---|---|---|---|---|---|---|---|---|---|---|---|---|---|
| NOMINAL INSIDE DIAMETER OF CARRIER PIPE (INCHES) | 6 | 8 | 10 | 12 | 14 | 15 | 16 | 18 | 20 | 21 | 24 | 27 | 30 | 36 | 42 | 48 | 54 | 60 | 66 | 72 |
| MIN. INSIDE DIA. OF CASING PIPE OR TUNNEL LINER (INCHES) | 18 | 21 | 24 | 26 | 28 | 26 | 30 | 34 | 36 | 36 | 45 | 45 | 51 | 60 | 66 | 75 | 84 | 90 | 96 | 102 |

## DETAIL OF SPECIAL CROSSINGS

NOT TO SCALE

NOTES FOR PAYMENT:

1. Payment for additional crushed stone or class D concrete pipe bedding materials will be made only for pipe bedding not shown on the Plans and ordered in writing by the Engineer.
2. Payment for surface restoration will be made for the actual quantities, as determined by the Engineer, of surface restored within the payment limits shown.
3. Payment for additional sand or crushed stone for trench stabilization, ordered in writing by the Engineer, will be made for the actual compacted volume, as determined by the Engineer, of sand or crushed stone placed within the payment limits shown.
4. Contractor shall use all surplus sand, approved as suitable, from excavations in this Contract prior to supplying sand from other sources. Payment for additional sand will be made only for sand supplied from sources other than excavations in this Contract. See Specifications for materials requirements.

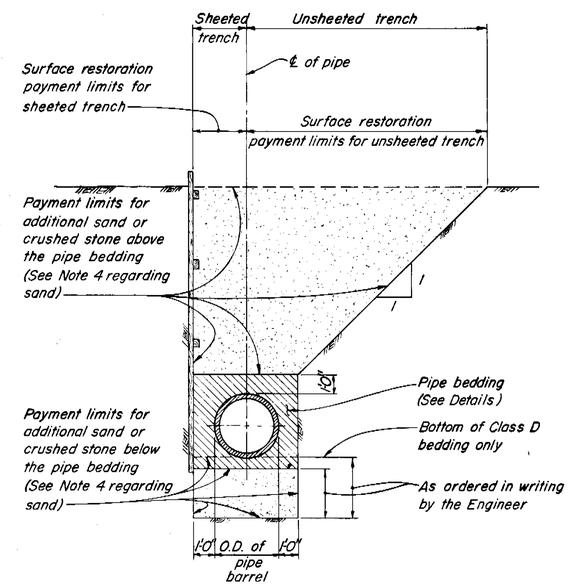


## PAYMENT LIMITS FOR SURFACE RESTORATION AND ADDITIONAL SAND OR CRUSHED STONE FOR TRENCH STABILIZATION

NOT TO SCALE

| | | | | | | |
|---|---|---|---|---|---|---|
| GREELEY AND HANSEN ENGINEERS 222 S. RIVERSIDE PLAZA CHICAGO, ILLINOIS 60606 | DESIGNED TLW<br>DRAWN AA<br>CHECKED TLW | APPROVED<br>DATE<br>SUPT., DEPT. OF SANITARY SEWERS<br>DATE<br>GREELEY AND HANSEN, ENGINEERS | NO. DATE APP. REVISION | SCALE 0 1 2 FT. 1"= 1'-0" | CITY OF TAMPA, FLORIDA<br>SEWAGE DISPOSAL SYSTEM<br>WEST RIVER INTERCEPTING SEWER REPLACEMENT | DIVISION BI-B<br>MISCELLANEOUS STANDARD DETAILS |

PROJ. NO. 2023-400-02-23
SHEET 17 OF 22
DATE MARCH 1981 REV. 0

210-16

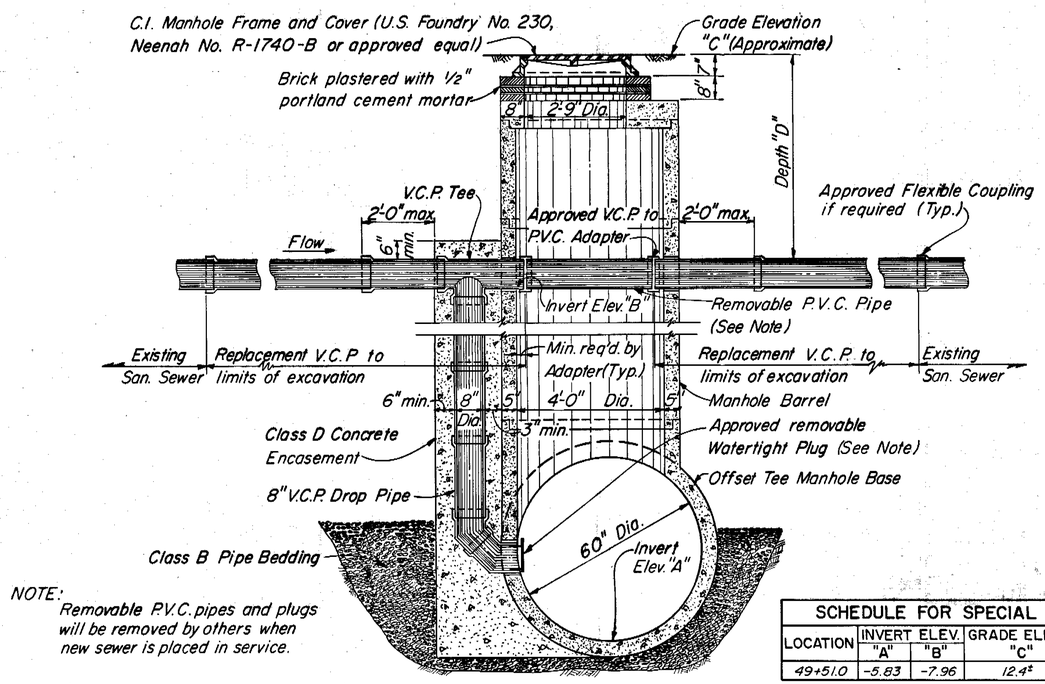


NOTE:
Removable P.V.C. pipes and plugs will be removed by others when new sewer is placed in service.

TYPICAL SECTION FOR 60" R.C.P.
[redacted]
SPECIAL MANHOLE MODIFICATIONS
SCALE: 1/2"=1'-0"

| SCHEDULE FOR SPECIAL MANHOLE MODIFICATIONS | | | | | | |
|---|---|---|---|---|---|---|
| LOCATION | INVERT ELEV. "A" | INVERT ELEV. "B" | GRADE ELEV. "C" | DEPTH "D" (FT) | CONNECT SEWER DIA. | DROP PIPE DIA. |
| 49+51.0 | -5.83 | -7.96 | 12.4± | 3.5± | 10" | 8" |

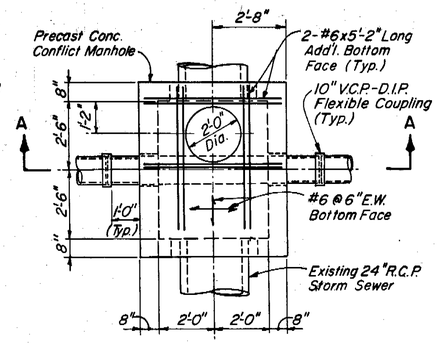


PLAN

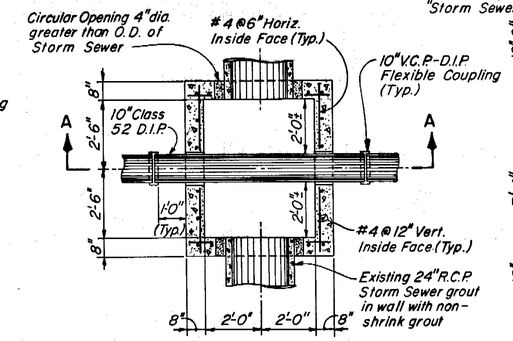


SECTIONAL PLAN
[redacted]

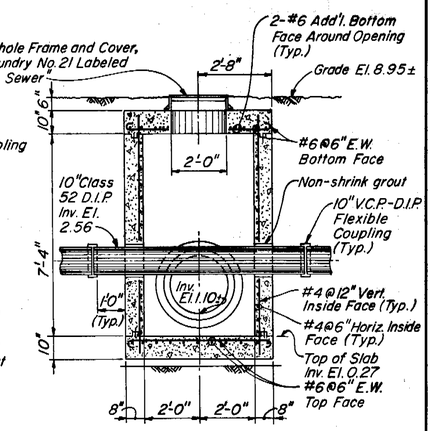


SECTION A-A

DETAILS OF CONFLICT MANHOLE ON UNIVERSITY OF TAMPA REPLACEMENT SEWER
STA. 12+16.0
SCALE: 3/8"=1'-0"

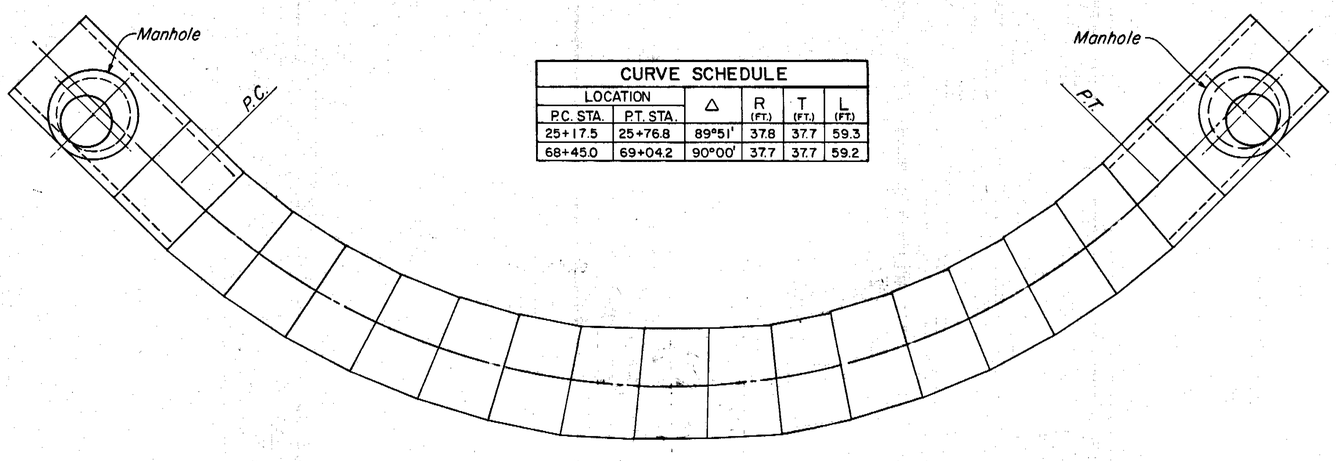


| CURVE SCHEDULE | | | | | |
|---|---|---|---|---|---|
| LOCATION | | Δ | R (FT.) | T (FT.) | L (FT.) |
| P.C. STA. | P.T. STA. | | | | |
| 25+17.5 | 25+76.8 | 89°51' | 37.8 | 37.7 | 59.3 |
| 68+45.0 | 69+04.2 | 90°00' | 37.7 | 37.7 | 59.2 |

SEWER CURVE DETAILS
SCALE: 1/4"=1'-0"

AS BUILT

| | | | | | | |
|---|---|---|---|---|---|---|
| GREELEY AND HANSEN ENGINEERS, 1211 NORTH WEST SHORE BLVD., TAMPA, FLORIDA 33607 | DESIGNED MDO<br>DRAWN FFL<br>CHECKED TLW | APPROVED<br>DATE<br>DIR., DEPT. OF SANITARY SEWERS<br>DATE<br>GREELEY AND HANSEN, ENGINEERS | NO. DATE APP. REVISION | SCALE: 1/4"=1'-0", 1/2"=1'-0", 3/8"=1'-0" | CITY OF TAMPA, FLORIDA<br>SEWAGE DISPOSAL SYSTEM<br>WEST RIVER INTERCEPTING SEWER REPLACEMENT | DIVISION B1-B<br>MISCELLANEOUS SEWER DETAILS |

PROJ. NO. 2023-400-02-23
SHEET 18 OF 22
DATE MARCH 1981 REV. 0

210-17

210-018

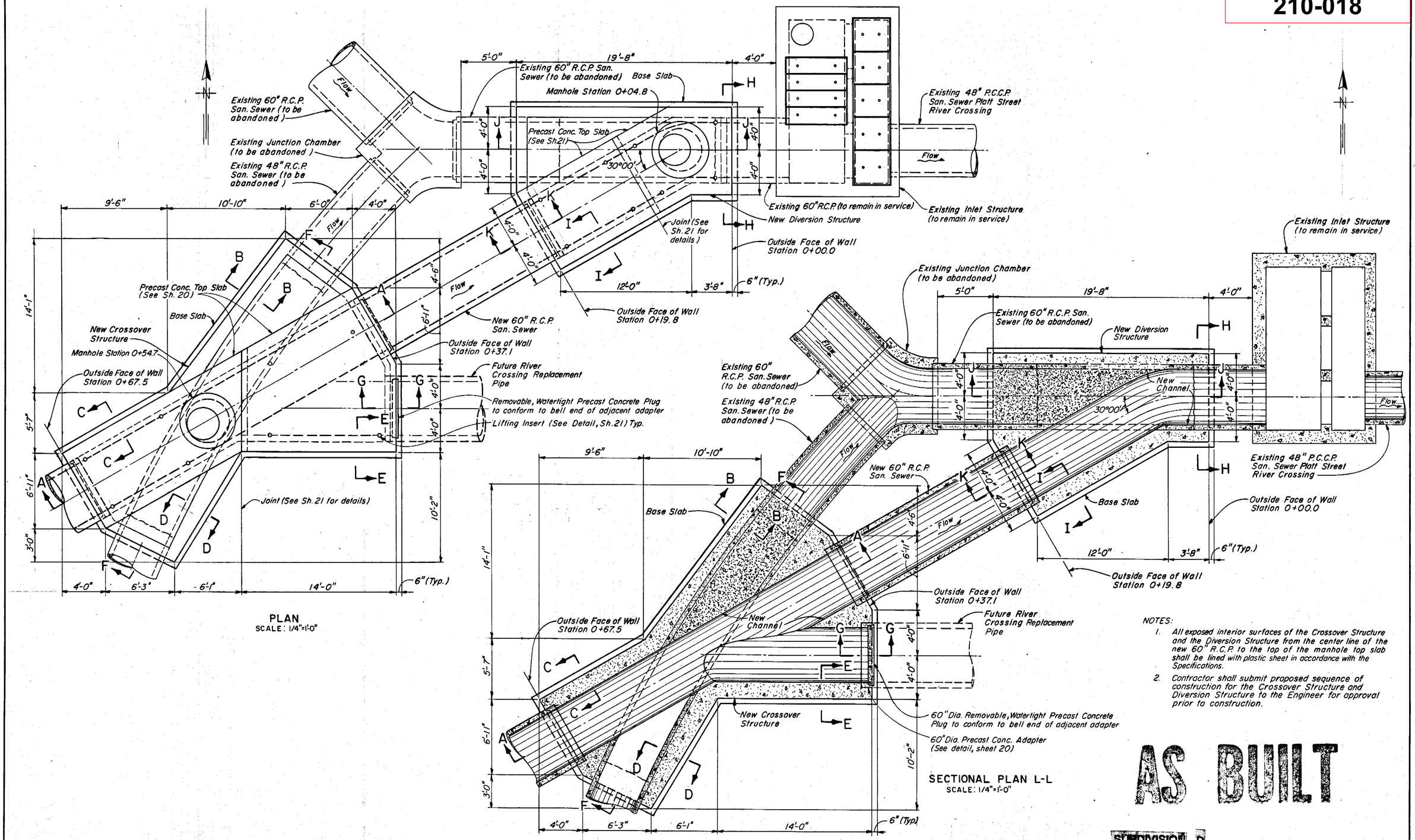


NOTES:

1. All exposed interior surfaces of the Crossover Structure and the Diversion Structure from the center line of the new 60" R.C.P. to the top of the manhole top slab shall be lined with plastic sheet in accordance with the Specifications.
2. Contractor shall submit proposed sequence of construction for the Crossover Structure and Diversion Structure to the Engineer for approval prior to construction.

AS BUILT

SUBDIVISION D

| | | | | | | | | |
|---|---|---|---|---|---|---|---|---|
| GREELEY AND HANSEN ENGINEERS 1211 NORTH WEST SHORE BLVD. TAMPA, FLORIDA 33607 | DESIGNED R.S.H. DRAWN F.F.L. CHECKED T.L.W. | APPROVED ____ DATE ____ DIR., DEPT. OF SANITARY SEWERS ____ DATE ____ GREELEY AND HANSEN, ENGINEERS | NO. | DATE | APP. | REVISION | SCALE 4 0 4 8 FT. 1/4"=1'-0" | CITY OF TAMPA, FLORIDA SEWAGE DISPOSAL SYSTEM WEST RIVER INTERCEPTING SEWER REPLACEMENT | DIVISION BI-B CROSSOVER STRUCTURE AND DIVERSION STRUCTURE AT BAYSHORE BLVD. AND CARDY ST. | PROJ. NO. 2023-400-02-23 SHEET 19 OF 22 DATE MARCH 1981 REV. 0 |

210-18

210-019

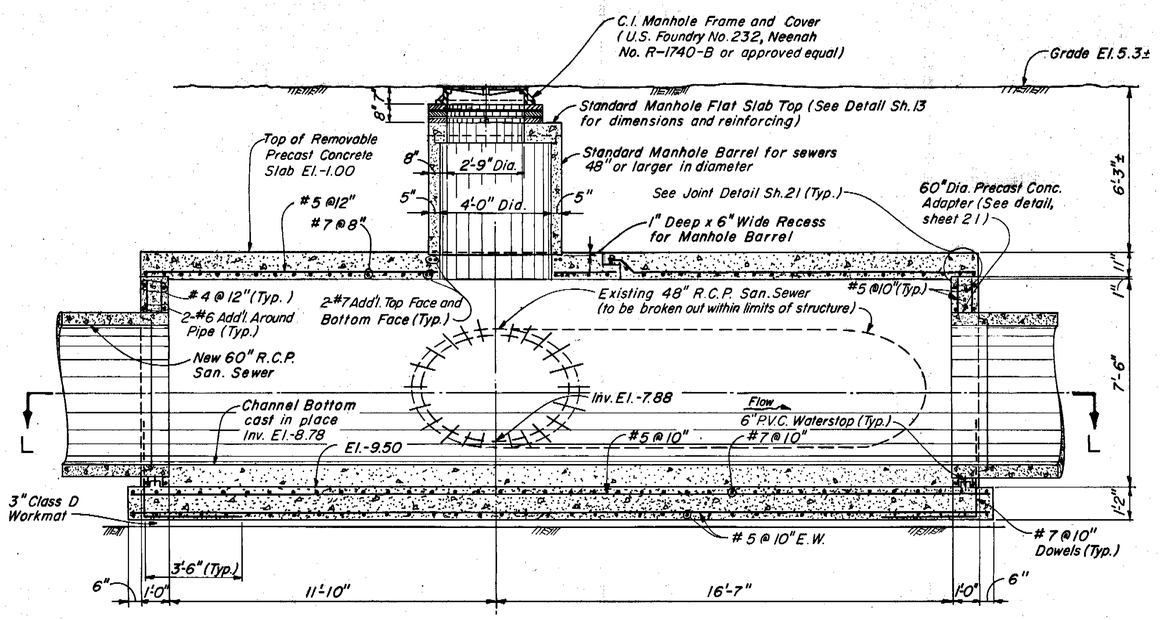


SECTION A-A
SCALE: 3/8"=1'-0"

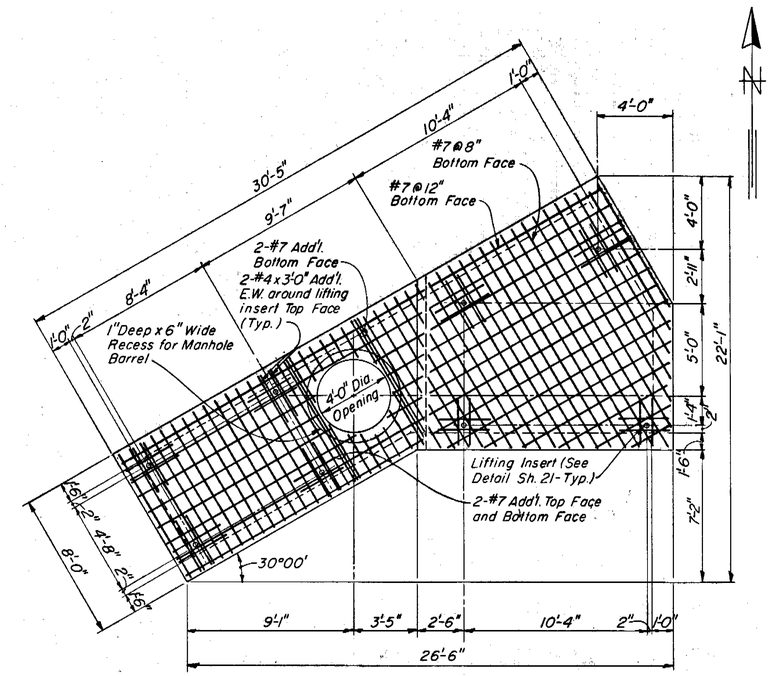


CROSSOVER STRUCTURE PRECAST TOP SLAB
NOT TO SCALE

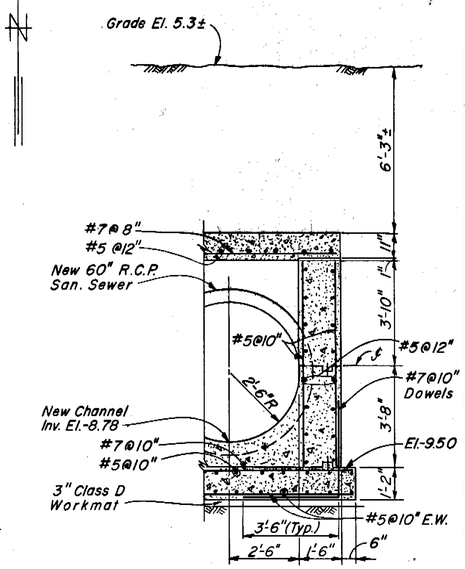


SECTION C-C
(SECTION E-E SAME)
SCALE: 3/8"=1'-0"

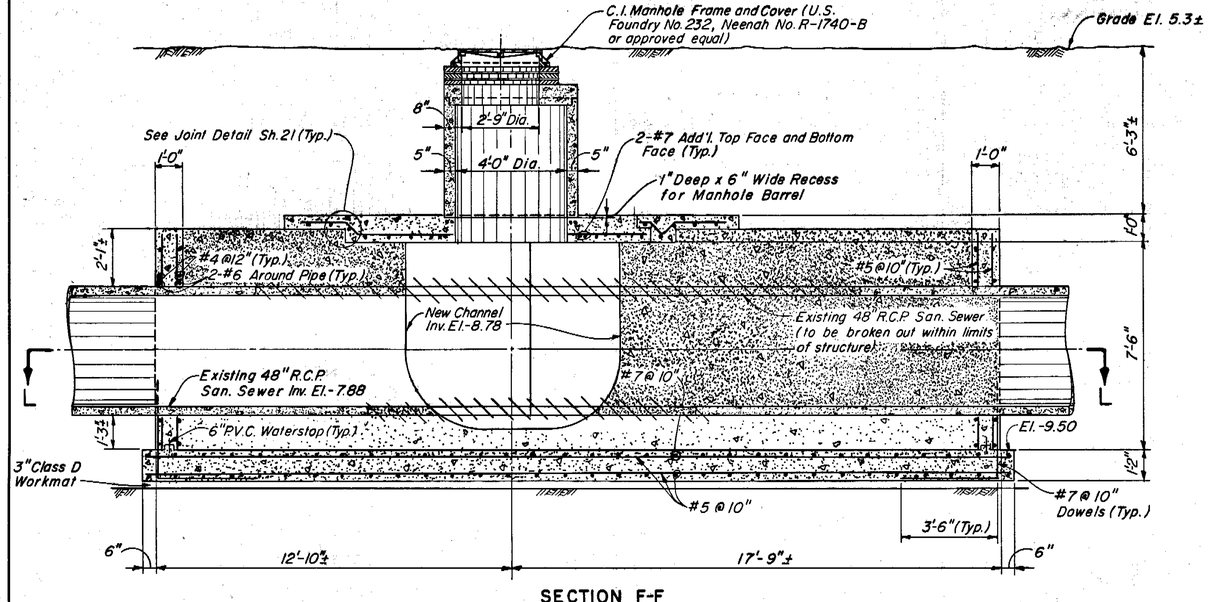


SECTION F-F
SCALE: 3/8"=1'-0"

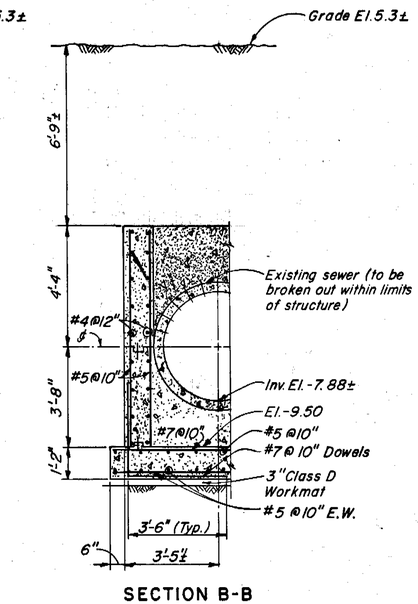


SECTION B-B
(SECTION D-D SAME
EXCEPT FILL WITH CONCRETE)
SCALE: 3/8"=1'-0"

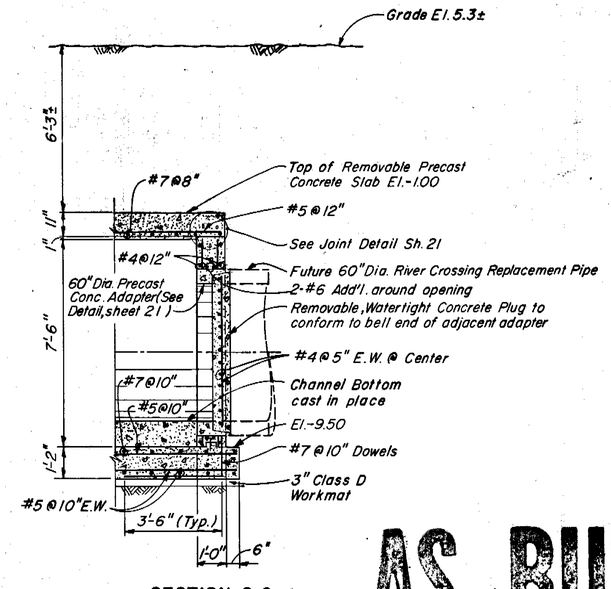


SECTION G-G
SCALE: 3/8"=1'-0"

AS BUILT

SUBDIVISION D

| | | | | | | | | |
|---|---|---|---|---|---|---|---|---|
| GREELEY AND HANSEN ENGINEERS, 1211 NORTH WEST SHORE BLVD., TAMPA, FLORIDA 33607 | DESIGNED R.S.H. / DRAWN F.F.L. / CHECKED T.L.W. | APPROVED ____ DATE ____ DIR., DEPT. OF SANITARY SEWERS ____ DATE ____ GREELEY AND HANSEN, ENGINEERS | NO. / DATE / APP. / REVISION | SCALE: 1/4"=1'-0" ; 3/8"=1'-0" | CITY OF TAMPA, FLORIDA<br>SEWAGE DISPOSAL SYSTEM<br>WEST RIVER INTERCEPTING SEWER REPLACEMENT | DIVISION B1-B<br>CROSSOVER STRUCTURE AT BAYSHORE BLVD. AND CARDY ST. | PROJ. NO. 2023-400-02-23<br>SHEET 20 OF 22<br>DATE MARCH 1981 | REV. 0 |

210-19

210-020

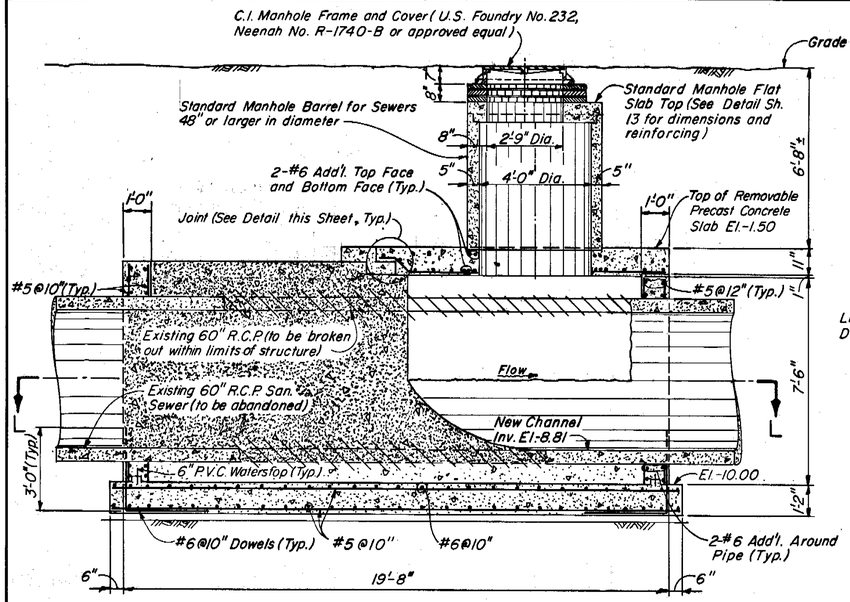


SECTION J-J
SCALE: 3/8"=1'-0"

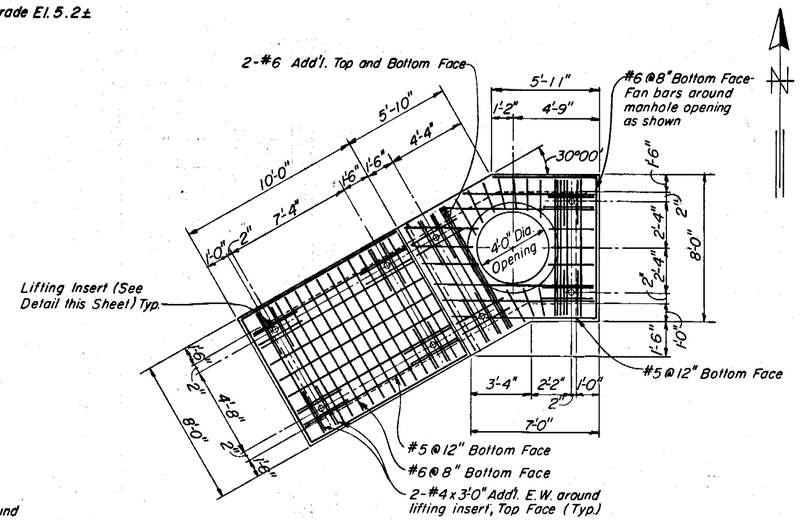


DIVERSION STRUCTURE PRECAST TOP SLAB
NOT TO SCALE

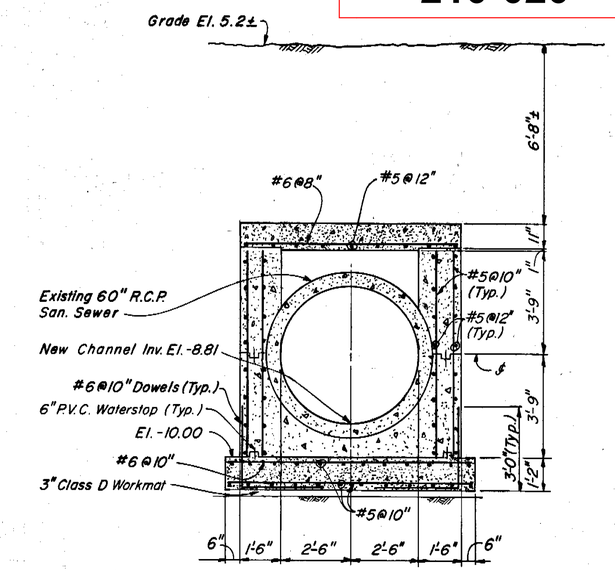


SECTION H-H
SCALE: 3/8"=1'-0"

AS BUILT

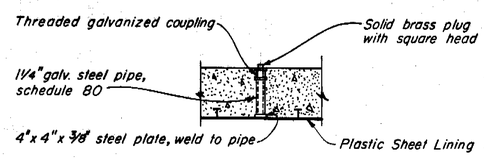


LIFTING INSERT DETAIL
NOT TO SCALE

NOTES:

1. Joint surfaces to be coated with 2 coats of Koppers Bitumastic 300 M, 16 mils. dry thickness per coat applied in strict accordance with the manufacturer's recommendations.
2. Proper care shall be taken to construct joints exactly to dimensions shown to ensure that all joint surfaces bear uniformly against adjacent joint surfaces.

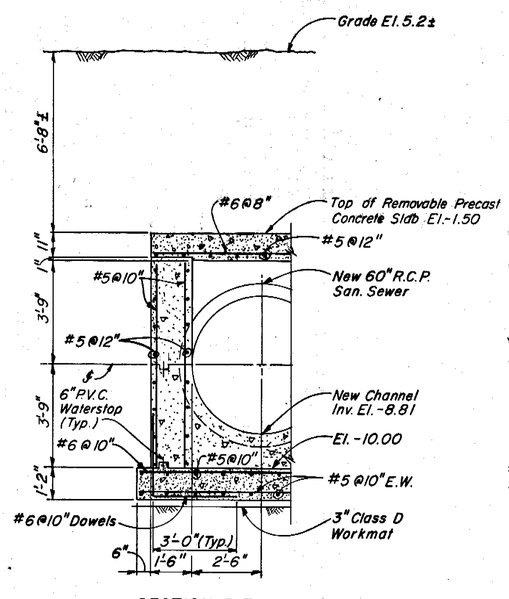


SECTION I-I
SCALE: 3/8"=1'-0"

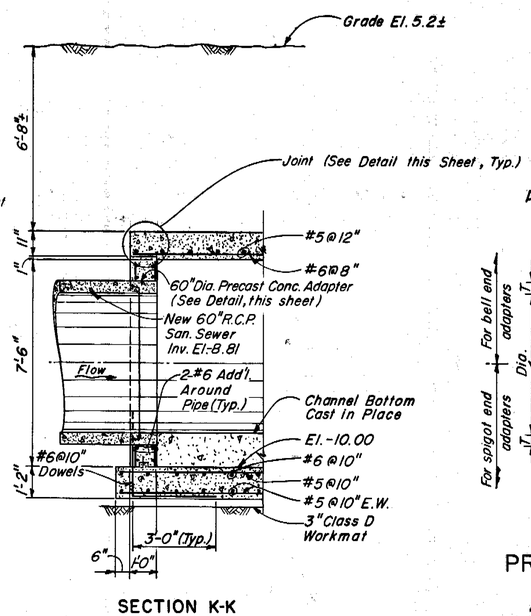


SECTION K-K
SCALE: 3/8"=1'-0"

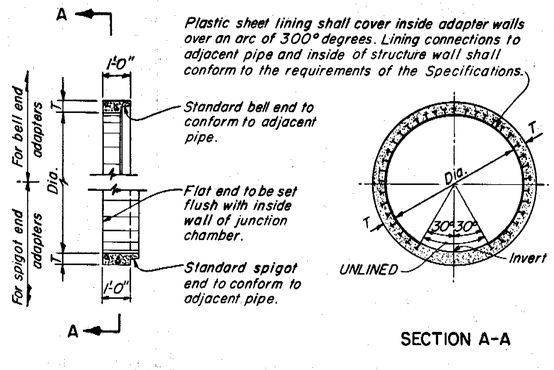


SECTION A-A

PRECAST CONCRETE ADAPTER DETAIL
NOT TO SCALE

NOTES:

1. Precast concrete shall conform to A.S.T.M. Des. C76, Class IV.
2. Adapter wall thickness "T" shall be the same as the adjacent reinforced concrete pipe sewer wall thickness.

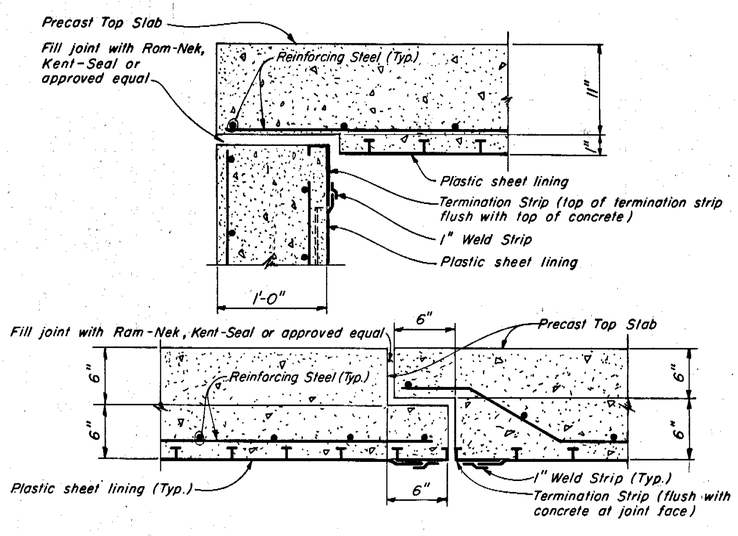


PRECAST CONCRETE TOP SLAB JOINT DETAILS
NOT TO SCALE

SUBDIVISION D

| | | | | | |
|---|---|---|---|---|---|
| GREELEY AND HANSEN ENGINEERS, 1211 NORTH WEST SHORE BLVD., TAMPA, FLORIDA 33607 | DESIGNED R.S.H. / DRAWN F.F.L. / CHECKED T.L.W. | APPROVED ____ DATE ____ DIR., DEPT. OF SANITARY SEWERS; ____ DATE ____ GREELEY AND HANSEN, ENGINEERS | NO. / DATE / APP. / REVISION | SCALE: 1/4"=1'-0"; 3/8"=1'-0" | CITY OF TAMPA, FLORIDA — SEWAGE DISPOSAL SYSTEM — WEST RIVER INTERCEPTING SEWER REPLACEMENT |

DIVISION B1-B
DIVERSION STRUCTURE AT BAYSHORE BLVD. AT CARDY ST.

PROJ. NO. 2023-400-02-23
SHEET 21 OF 22
DATE MARCH 1981 REV. 0

210-20

210-021

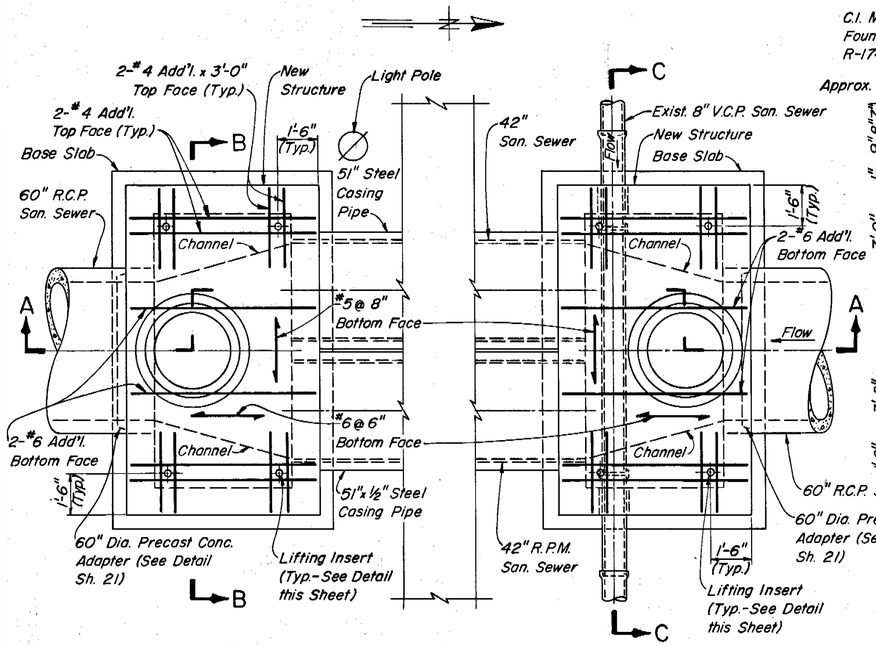


PLAN
SCALE: 3/8"=1'-0"

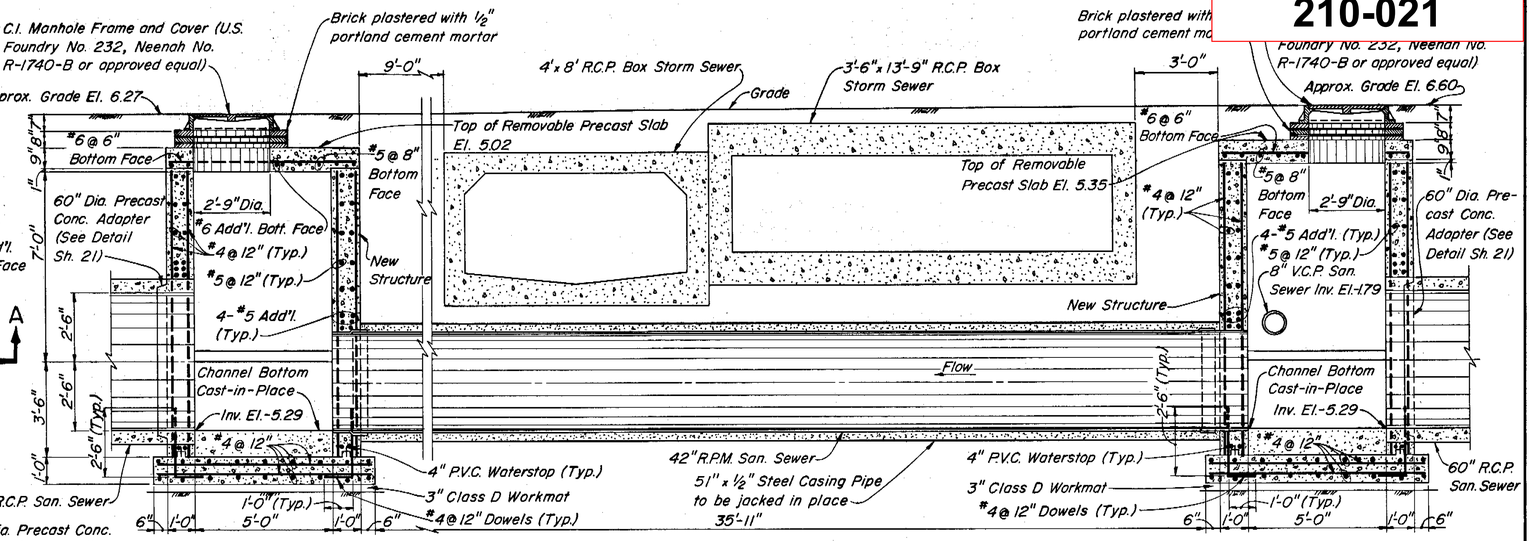


SECTION A-A
SCALE: 3/8"=1'-0"

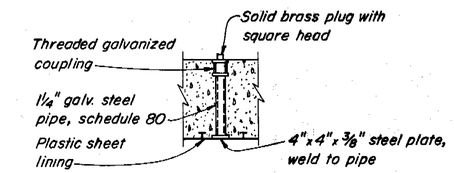


LIFTING INSERT DETAIL
NOT TO SCALE

NOTES:

1. Removable 8" P.V.C. pipe shall be removed by others when new intercepting sewer is placed in service.
2. All exposed interior surfaces of the structures from the center line of the 42" R.P.M. sanitary sewer to the top of the top slabs shall be lined with plastic sheet lining in accordance with the Specifications.

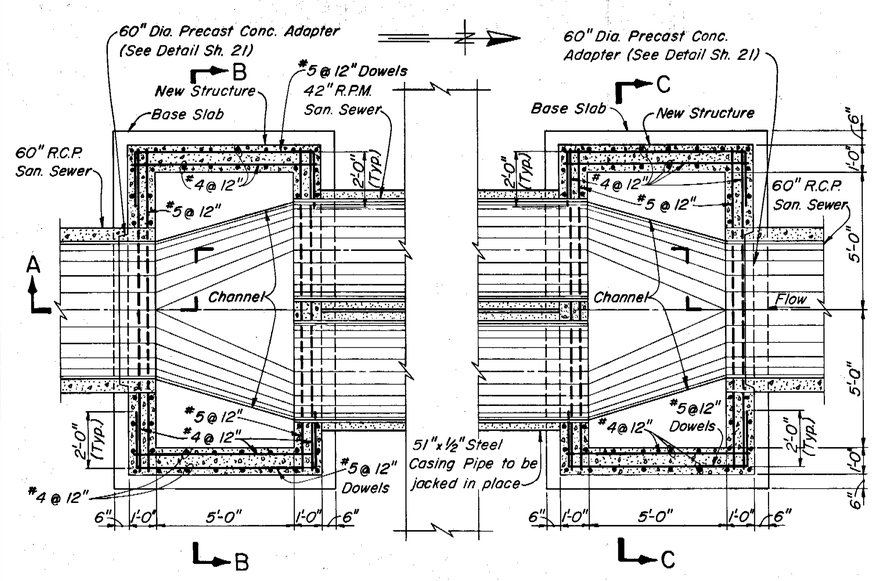


SECTIONAL PLAN
SCALE: 3/8"=1'-0"

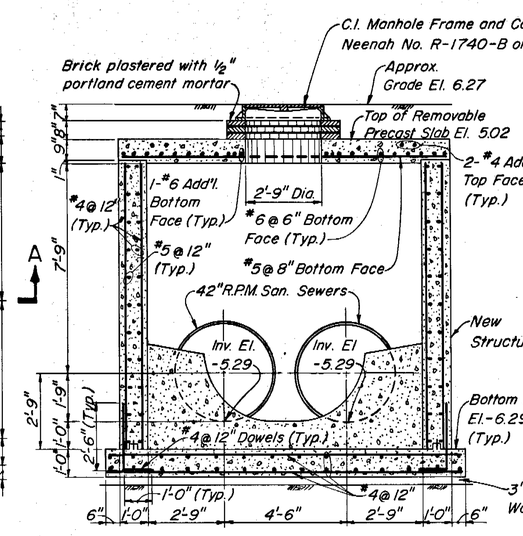


SECTION B-B
SCALE: 3/8"=1'-0"

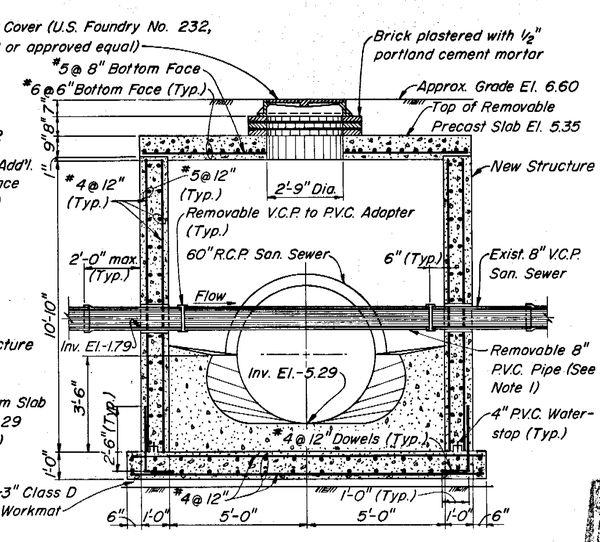


SECTION C-C
SCALE: 3/8"=1'-0"

AS BUILT

SUBDIVISION B

| | | | | | | |
|---|---|---|---|---|---|---|
| GREELEY AND HANSEN ENGINEERS 1211 NORTH WEST SHORE BLVD. TAMPA, FLORIDA 33607 | DESIGNED MDO, JFS<br>DRAWN AA<br>CHECKED TLW | APPROVED<br>DIR., DEPT. OF SANITARY SEWERS DATE<br>GREELEY AND HANSEN, ENGINEERS DATE | NO. 1 DATE 1/25/83 APP. TLW REVISION: Add Note 2 | SCALE 0 1 2 3 4 5 6 7 FT. 3/8"=1'-0" | CITY OF TAMPA, FLORIDA<br>SEWAGE DISPOSAL SYSTEM<br>WEST RIVER INTERCEPTING SEWER REPLACEMENT | DIVISION BI-B<br>CONFLICT STRUCTURE AT STA. 58+45.0 |

PROJ. NO. 2023-400-02-23
SHEET 22 OF 22
DATE MARCH 1981 REV. 1

210-21

211-003

# INDEX MAP

AS-BUILT

1-2-86

Indicates Sheet Number

# LEGEND

## EXISTING STRUCTURES AND FEATURES

| | UP TO 36" | 36" AND LARGER |
|---|---|---|
| SANITARY SEWER & MANHOLE | | |
| STORM SEWER & MANHOLE | | |
| SANITARY FORCE MAIN | FM | |
| WATER MAIN | | |
| GAS MAIN & DRIP | | |
| ELECTRIC CABLE OR DUCT | | |
| TELEPHONE CABLE OR DUCT | | |
| FIRE ALARM CABLE | F F | |
| VALVE | | |
| HYDRANT | | |
| CATCH BASIN | CB CB | |
| POLE, POWER OR TELEPHONE | | |
| VALVE VAULT | V | |
| WATER METER | M | |
| ELECTRIC MANHOLE OR VAULT | E | |
| TELEPHONE MANHOLE OR VAULT | T | |
| SPOT ELEVATION | 6.7 | |
| EXISTING HOUSE LATERAL | (WYE IN SEWER) (DEPTH AT ℄) (TEE IN SEWER) | |

| | |
|---|---|
| POWER POLE GUY | |
| BUILDING | |
| FENCE | |
| PROPERTY LINE | |
| PROPERTY CORNERS: | |
| IRON PIPE OR PIN | I.P. |
| CONCRETE MONUMENT | Mon. |
| TREE | |
| HEDGE | |
| RAILROAD TRACKS | |
| LIGHT POLE | LP |
| SIGN OR SIGNAL | S |
| WATER COURSE | |
| PAVEMENT | Pvmnt. |
| RIVER BANK | |

## SEWER CONSTRUCTION

IN THIS DIVISION: UP TO 36" | 36" AND LARGER | IN ADJOINING DIVISION:

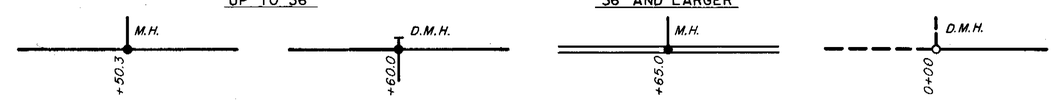


PLAN

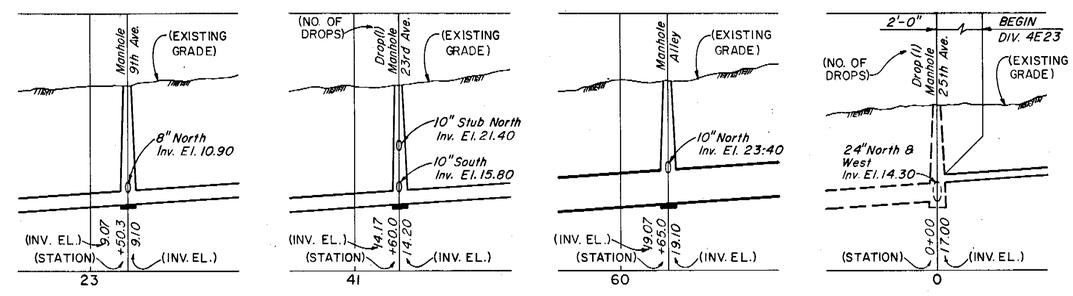


PROFILE

APPROXIMATE LOCATION OF HOUSE LATERAL AT PROPERTY LINE

SYMBOL FOR TYPE C HOUSE LATERAL

CITY SURVEY LINE

| | | | | | |
|---|---|---|---|---|---|
| GREELEY AND HANSEN ENGINEERS 1211 NORTH WEST SHORE BLVD. TAMPA, FLORIDA 33607 | DESIGNED MDO, RSH<br>DRAWN AA<br>CHECKED TLW | APPROVED<br>DATE<br>DIR., DEPT. OF SANITARY SEWERS<br>DATE<br>GREELEY AND HANSEN, ENGINEERS | NO. DATE APP. REVISION | SCALE 800 0 800 1600 FT. 1" = 800' | CITY OF TAMPA, FLORIDA<br>SEWAGE DISPOSAL SYSTEM<br>WEST RIVER INTERCEPTING SEWER REPLACEMENT<br>PERRY AVENUE RIVER CROSSING REPLACEMENT |

DIVISIONS B2-A AND DI-A
INDEX MAP AND LEGEND

PROJ. NO. 2023-400-06-23
SHEET 2 OF 24
DATE APRIL 1980 REV. 0

211-3

211-004

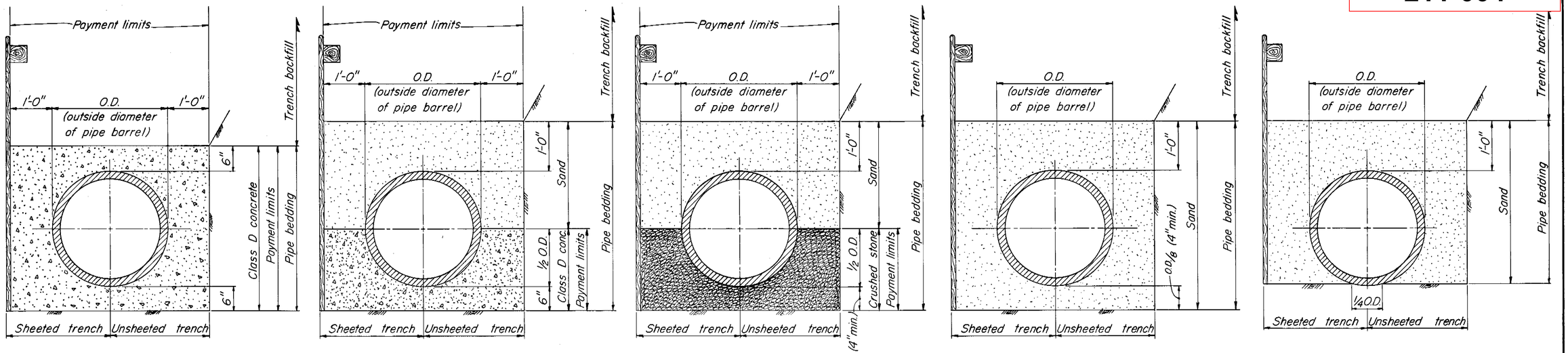


CONCRETE ENCASEMENT

CLASS A BEDDING (CONCRETE CRADLE)

CLASS B BEDDING

CLASS C BEDDING

CLASS D BEDDING

## PIPE BEDDING DETAILS

NOT TO SCALE

NOTES: 1. All types of pipe bedding shall extend to undisturbed earth at the sides and bottom of the trench
2. Sand and crushed stone pipe bedding shall be placed and compacted in accordance with Specifications

| QUANTITIES FOR PAYMENT FOR ADDITIONAL PIPE BEDDING MATERIALS ORDERED IN WRITING BY THE ENGINEER | | | | | | | | | | | | | | | | | | | | |
|---|---|---|---|---|---|---|---|---|---|---|---|---|---|---|---|---|---|---|---|---|
| NOMINAL INSIDE PIPE DIAMETER (INCHES) | 6 | 8 | 10 | 12 | 14 | 15 | 16 | 18 | 20 | 21 | 24 | 27 | 30 | 36 | 42 | 48 | 54 | 60 | 66 | 72 |
| CUBIC YARDS OF CONCRETE PER LINEAR FOOT OF PIPE IN CONCRETE ENCASEMENT | 0.141 | 0.167 | 0.191 | 0.216 | 0.229 | 0.256 | 0.252 | 0.299 | 0.300 | 0.340 | 0.383 | 0.427 | 0.472 | 0.588 | 0.690 | 0.797 | 0.909 | 1.027 | 1.150 | 1.279 |
| CUBIC YARDS OF CONCRETE PER LINEAR FOOT OF PIPE IN CLASS A BEDDING (CONCRETE CRADLE) | 0.071 | 0.084 | 0.096 | 0.108 | 0.115 | 0.128 | 0.126 | 0.150 | 0.150 | 0.170 | 0.192 | 0.214 | 0.236 | 0.294 | 0.345 | 0.399 | 0.455 | 0.514 | 0.575 | 0.640 |
| CUBIC YARDS OF CRUSHED STONE PER LINEAR FOOT OF PIPE IN CLASS B BEDDING | 0.055 | 0.066 | 0.078 | 0.088 | 0.094 | 0.111 | 0.108 | 0.143 | 0.143 | 0.173 | 0.207 | 0.243 | 0.280 | 0.381 | 0.475 | 0.578 | 0.690 | 0.810 | 0.939 | 1.078 |

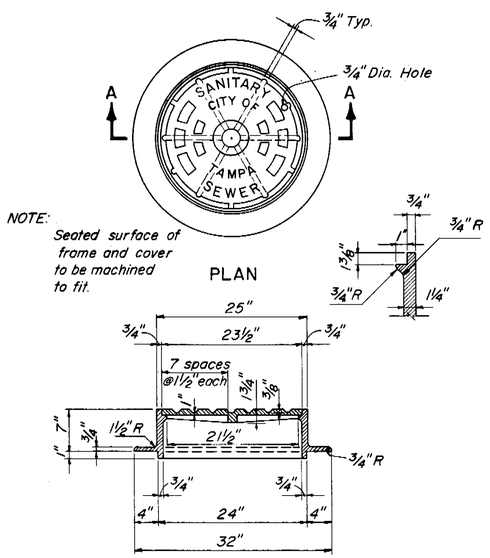


NOTE:
Seated surface of frame and cover to be machined to fit.

PLAN

SECTION A-A

## CAST IRON MANHOLE FRAME & COVER

FOR MANHOLES ON SEWERS 24" OR LESS IN DIAMETER

Approx. Wt.= 380#

SCALE: 1"= 1'-0"

AS BUILT

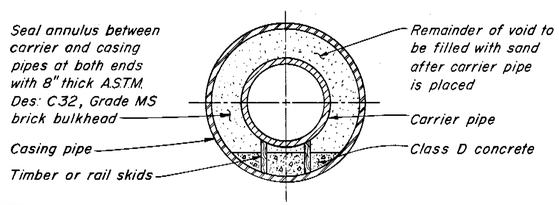


NOTES:
1. All casing pipes shall be welded steel pipe conforming to A.S.T.M. Des. A139 or tongue and groove reinforced concrete pipe conforming to A.S.T.M. Des. C76, class V.
2. Minimum diameter for manually excavated casing pipes shall be 36 inches.

| CORRESPONDING CARRIER AND CASING PIPE SIZES | | | | | | | | | | | | | | | | | | | | |
|---|---|---|---|---|---|---|---|---|---|---|---|---|---|---|---|---|---|---|---|---|
| NOMINAL INSIDE DIAMETER OF CARRIER PIPE (INCHES) | 6 | 8 | 10 | 12 | 14 | 15 | 16 | 18 | 20 | 21 | 24 | 27 | 30 | 36 | 42 | 48 | 54 | 60 | 66 | 72 |
| MINIMUM INSIDE DIAMETER OF CASING PIPE (INCHES) | 18 | 21 | 24 | 26 | 28 | 26 | 30 | 34 | 36 | 36 | 45 | 45 | 51 | 60 | 66 | 75 | 84 | 90 | 96 | 102 |

## DETAIL OF JACKED CROSSINGS

NOT TO SCALE

NOTES FOR PAYMENT:

1. Payment for additional crushed stone or class D concrete pipe bedding materials will be made only for pipe bedding not shown on the Plans and ordered in writing by the Engineer.
2. Payment for surface restoration will be made for the actual quantities, as determined by the Engineer, of surface restored within the payment limits shown.
3. Payment for additional sand or crushed stone for trench stabilization, ordered in writing by the Engineer, will be made for the actual compacted volume, as determined by the Engineer, of sand or crushed stone placed within the payment limits shown.
4. Contractor shall use all surplus sand, approved as suitable, from excavations in this Contract prior to supplying sand from other sources. Payment for additional sand will be made only for sand supplied from sources other than excavations in this Contract. See Specifications for materials requirements.

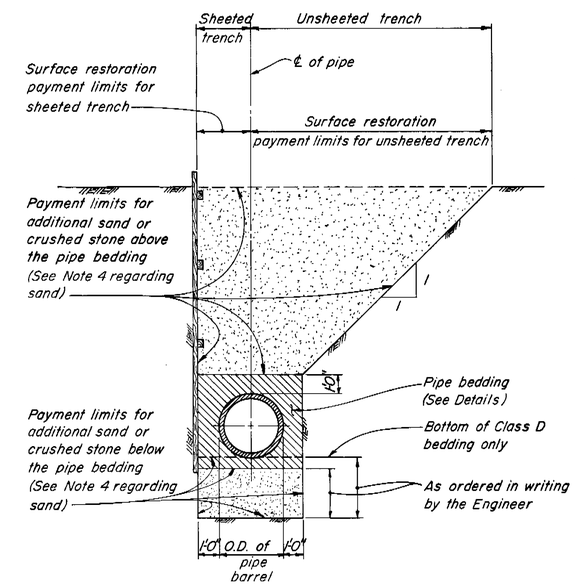


## PAYMENT LIMITS FOR SURFACE RESTORATION AND ADDITIONAL SAND OR CRUSHED STONE FOR TRENCH STABILIZATION

NOT TO SCALE

| | | | | | | | |
|---|---|---|---|---|---|---|---|
| GREELEY AND HANSEN ENGINEERS 1211 NORTH WEST SHORE BLVD. TAMPA, FLORIDA 33607 | DESIGNED TLW<br>DRAWN AA<br>CHECKED TLW | APPROVED<br>DATE<br>DIR., DEPT. OF SANITARY SEWERS<br>DATE<br>GREELEY AND HANSEN, ENGINEERS | NO. DATE APP. REVISION | SCALE 0 2 FT 1"= 1'-0" | CITY OF TAMPA, FLORIDA<br>SEWAGE DISPOSAL SYSTEM<br>WEST RIVER INTERCEPTING SEWER REPLACEMENT<br>PERRY AVENUE RIVER CROSSING REPLACEMENT | DIVISIONS B2-A AND D1-A<br>MISCELLANEOUS STANDARD DETAILS | PROJ. NO. 2023-400-06-23<br>SHEET 3 OF 24<br>DATE APRIL 1980 REV. 0 |

211-4

211-005

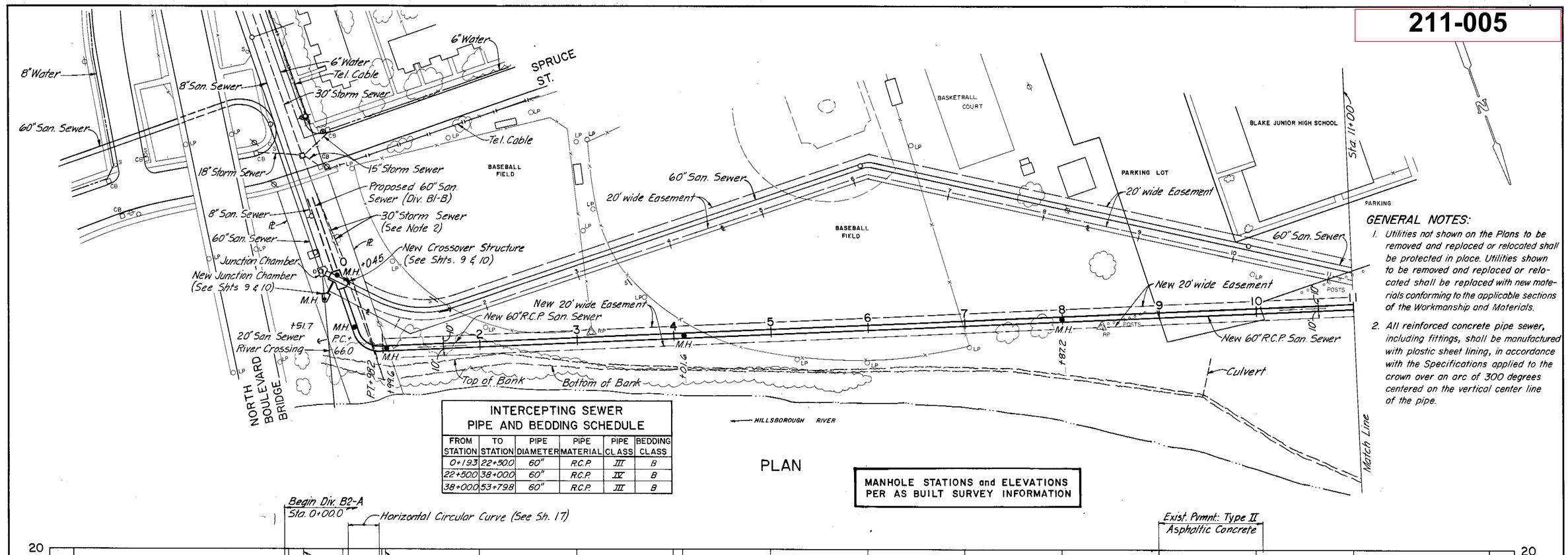


## GENERAL NOTES:

1. Utilities not shown on the Plans to be removed and replaced or relocated shall be protected in place. Utilities shown to be removed and replaced or relocated shall be replaced with new materials conforming to the applicable sections of the Workmanship and Materials.
2. All reinforced concrete pipe sewer, including fittings, shall be manufactured with plastic sheet lining, in accordance with the Specifications applied to the crown over an arc of 300 degrees centered on the vertical center line of the pipe.

### INTERCEPTING SEWER PIPE AND BEDDING SCHEDULE

| FROM STATION | TO STATION | PIPE DIAMETER | PIPE MATERIAL | PIPE CLASS | BEDDING CLASS |
|---|---|---|---|---|---|
| 0+193 | 22+500 | 60" | R.C.P. | III | B |
| 22+500 | 38+000 | 60" | R.C.P. | IV | B |
| 38+000 | 53+798 | 60" | R.C.P. | III | B |

PLAN

**MANHOLE STATIONS and ELEVATIONS PER AS BUILT SURVEY INFORMATION**

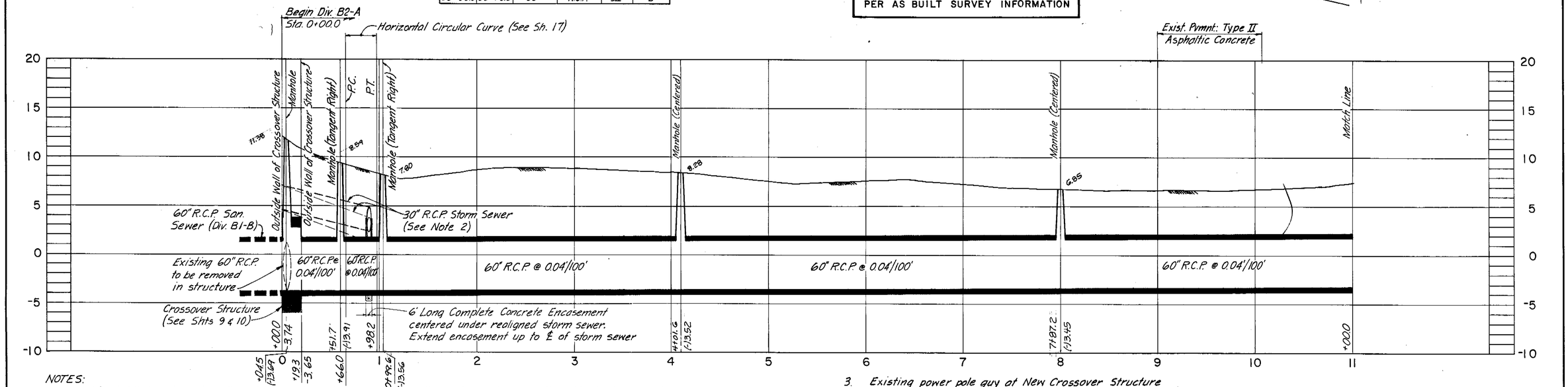


PROFILE

NOTES:

1. Sta. 0+00.0 is the outside face of the south wall of the New Crossover Structure (See Sheet 9).
2. Contractor shall remove existing 30" storm sewer to permit construction of New Crossover Structure and 60" R.C.P. Sanitary Sewer. Contractor shall then reconstruct 30" storm sewer at revised vertical alignment as shown on Sheet 16. Contractor shall use bevel pipe and deflect joints ½-inch maximum as required to revise horizontal alignment to clear nearest corner of New Crossover Structure by 2 feet minimum as shown and directed by the Engineer.
3. Existing power pole guy at New Crossover Structure to be relocated by others.

AS-BUILT

| | | | | | |
|---|---|---|---|---|---|
| GREELEY AND HANSEN ENGINEERS, 1211 NORTH WEST SHORE BLVD., TAMPA, FLORIDA 33607 | DESIGNED MDO, TLW<br>DRAWN AA<br>CHECKED TLW | APPROVED<br>DATE<br>DIR., DEPT. OF SANITARY SEWERS<br>DATE<br>GREELEY AND HANSEN, ENGINEERS | NO. 1 DATE 12/85 APP. CA REVISION: AS-BUILT PER FIELD SURVEY | SCALE: HORIZ. 1" = 50'; VERT. 1" = 5' | CITY OF TAMPA, FLORIDA<br>SEWAGE DISPOSAL SYSTEM<br>WEST RIVER INTERCEPTING SEWER REPLACEMENT | DIVISION B2-A<br>PLAN AND PROFILE<br>STA. 0+00 TO STA. 11+00 | PROJ. NO. 2023-400-06-23<br>SHEET 4 OF 24<br>DATE APRIL 1980 REV. 0 |

211-5

AASC 16943

211-005 - Supplemental

GREELEY AND HANSEN ENGINEERS

PROJECT WEST RIVER INTERCEPTING SEWER REPL.
SUBJECT Supplemental Drawing No. 4
Revised Design for Conflict Structure at Sta. 12+09

PROJ NO. 2023-410-00-42
CLIENT Tampa, Fla

COMP BY RSH DATE 4-15-82 CKD BY TLW DATE 4-15-82 SHEET 1 OF 2

SUPPLEMENTAL DRAWING NO. 4

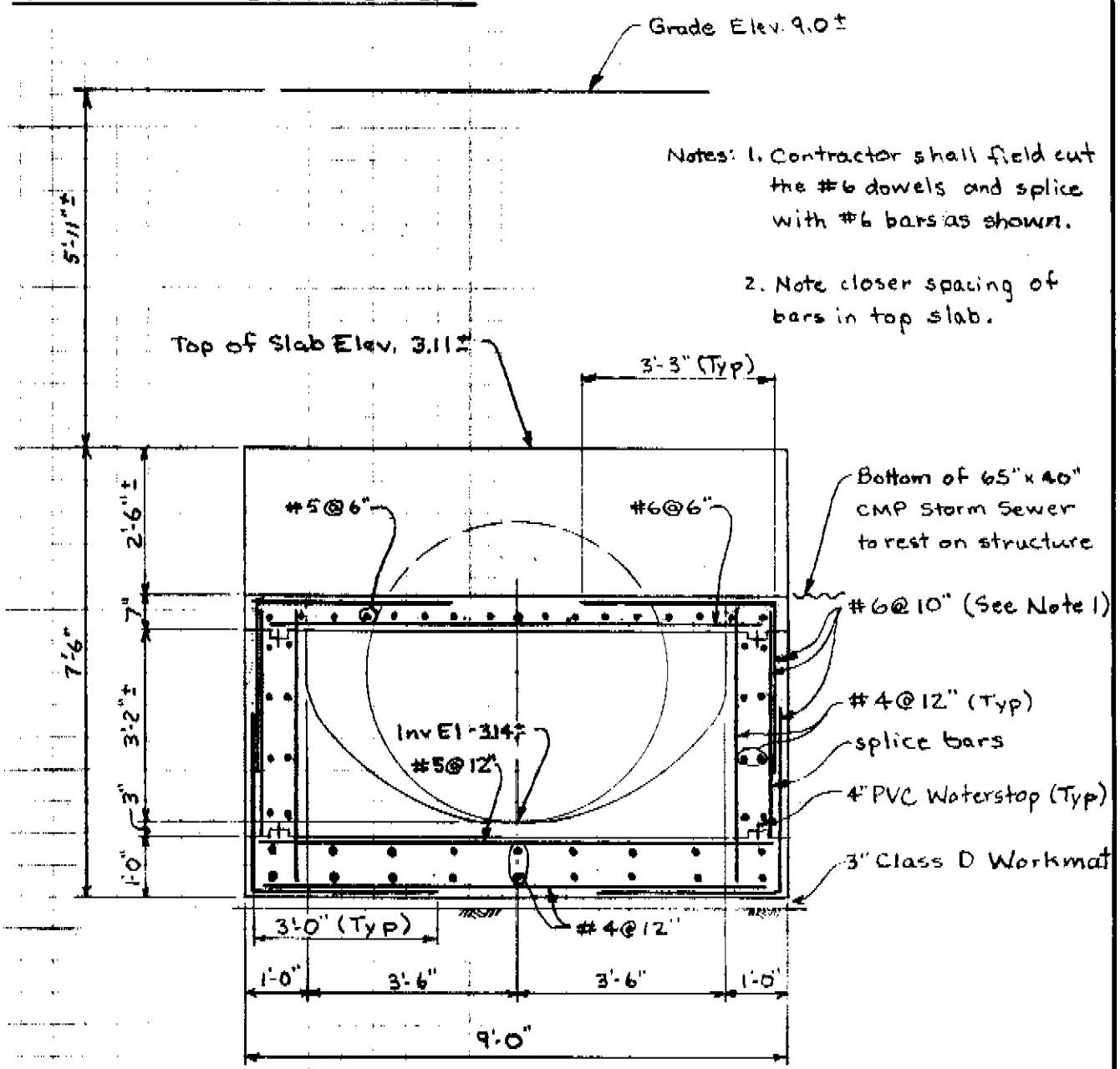


SECTION A-A
SCALE: 3/8" = 1'-0"

211-006

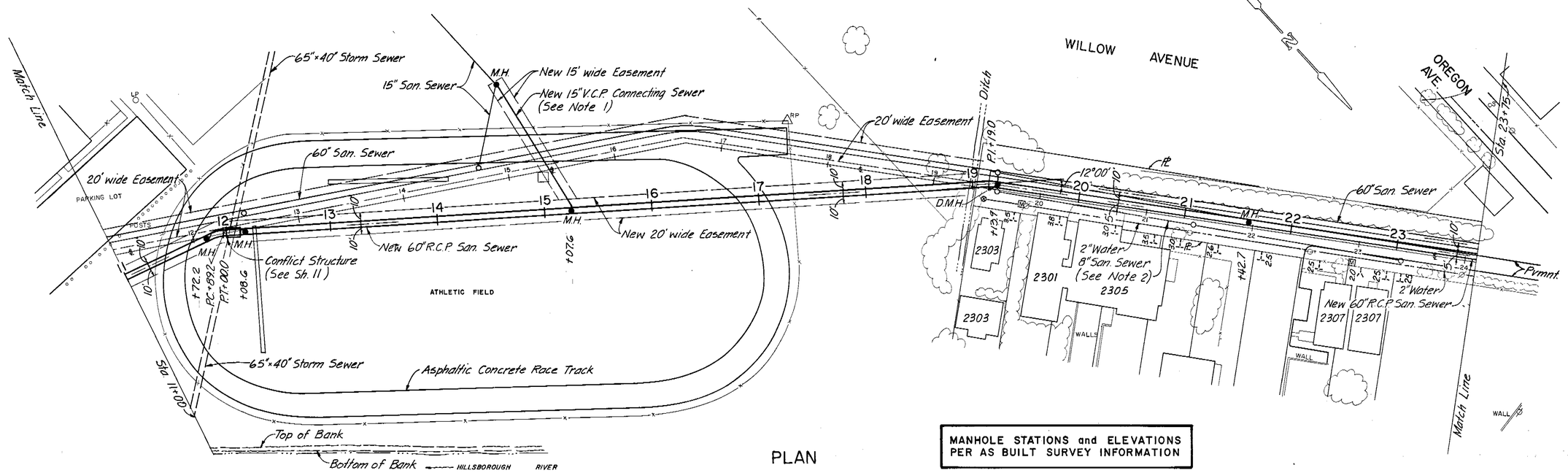


PLAN

MANHOLE STATIONS and ELEVATIONS PER AS BUILT SURVEY INFORMATION

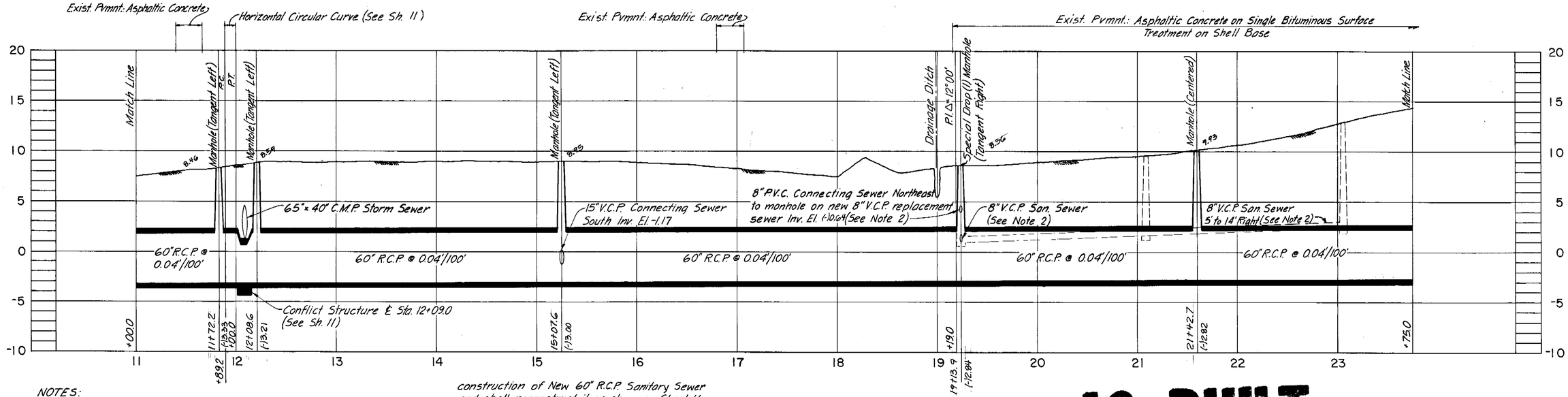


PROFILE

NOTES:

1. Contractor shall construct new 15" V.C.P. Connecting Sewer from manhole at Sta. 15+25.0 to manhole on existing 15" sanitary sewer as shown on Sheet 16.
2. Contractor shall remove existing 8" sanitary sewer and manholes from Sta. 19+24.5 to Sta. 23+05± to permit construction of New 60" R.C.P. Sanitary Sewer and shall reconstruct it as shown on Sheet 16. Contractor shall connect the 8" Replacement Sewer at Sta. 19+24.5 to the New and Existing 60" Sewers as shown on Sheet 18. Contractor shall maintain continuous sanitary sewer service by approved temporary methods during construction.

AS-BUILT

| | | | | | |
|---|---|---|---|---|---|
| GREELEY AND HANSEN ENGINEERS, 1211 NORTH WEST SHORE BLVD., TAMPA, FLORIDA 33607 | DESIGNED MDO, TLW<br>DRAWN AA<br>CHECKED TLW | APPROVED<br>DIR., DEPT. OF SANITARY SEWERS — DATE<br>GREELEY AND HANSEN, ENGINEERS — DATE | NO. 1 — DATE 12/95 — APP. CA — REVISION: AS-BUILT PER FIELD SURVEY | SCALE: HORIZ. 1" = 50'; VERT. 1" = 5' | CITY OF TAMPA, FLORIDA<br>SEWAGE DISPOSAL SYSTEM<br>WEST RIVER INTERCEPTING SEWER REPLACEMENT |

DIVISION B2-A
PLAN AND PROFILE
STA. 11+00 TO STA. 23+75

PROJ. NO. 2023-400-06-23
SHEET 5 OF 24
DATE APRIL 1980 REV. 0

211-6

AASC 16943

211-007

CITY OF TAMPA WATER AND SANITARY SEWERS
OPERATIONS YARD AND VEHICLE MAINTENANCE FACILITIES

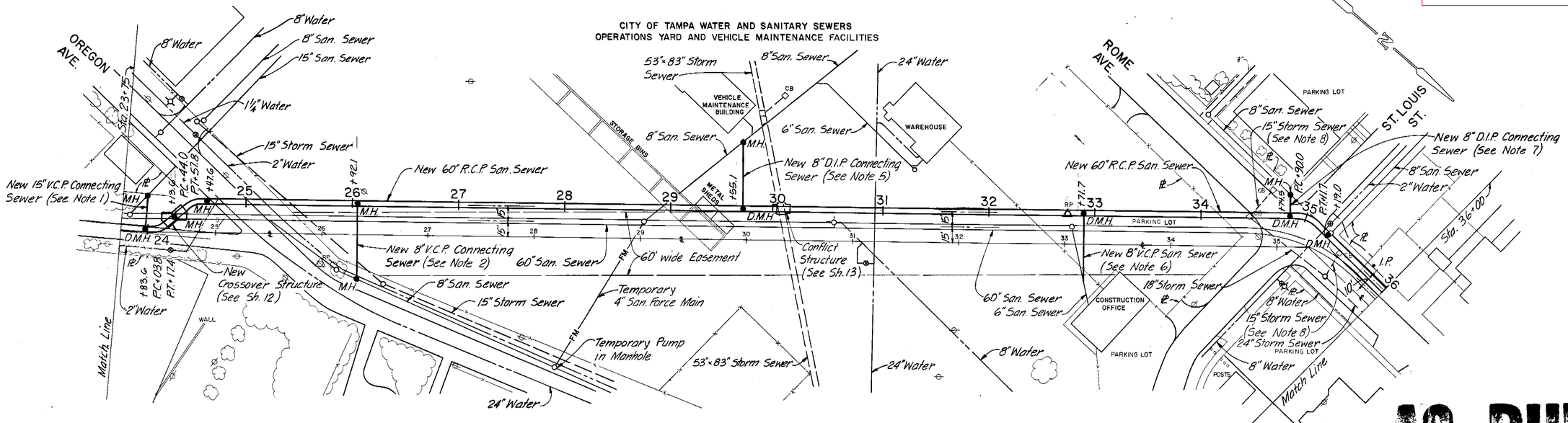


AS-BUILT

MANHOLE STATIONS and ELEVATIONS PER AS BUILT SURVEY INFORMATION

PLAN

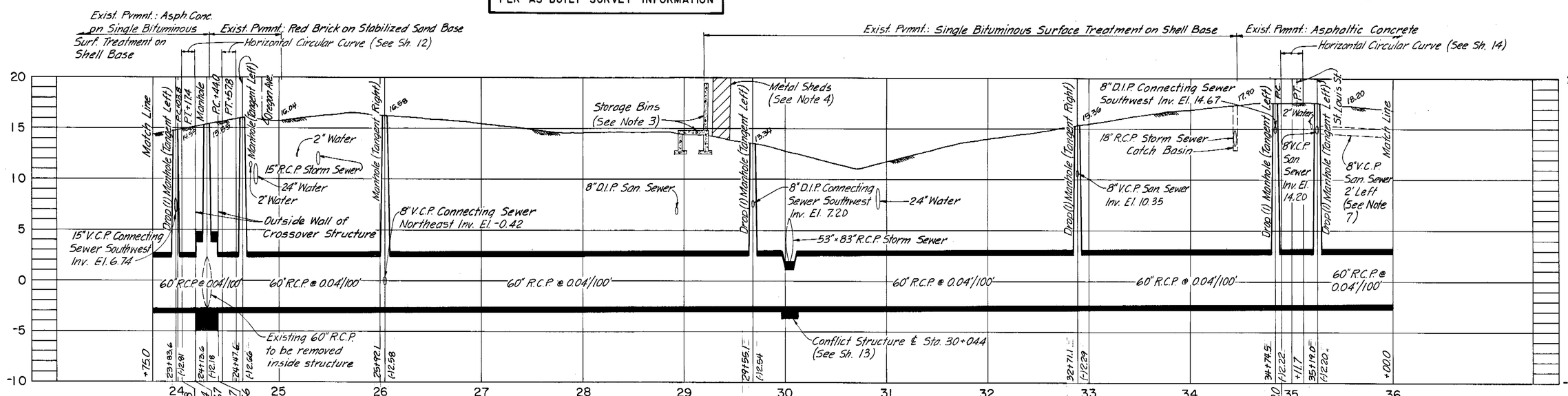


PROFILE

NOTES:

1. Contractor shall construct new 15" V.C.P. Connecting Sewer from manhole at Sta. 23+97.8 to existing 15" sanitary sewer as shown on Sheet 16.
2. Contractor shall construct new 8" V.C.P. Connecting Sewer from manhole at Sta. 26+05.0 to existing 8" sanitary sewer in Oregon Ave. as shown on Sheet 16.
3. Contractor shall remove northern 2½ storage bins at Sta. 29+00± to permit construction of New 60" R.C.P. Sanitary Sewer and shall reconstruct them as shown on Sheet 18.
4. Contractor shall remove metal sheds at Sta. 29+30± to permit construction of New 60" R.C.P. Sanitary Sewer and shall then replace them as directed by the Engineer.
5. Contractor shall construct 8" D.I.P. Connecting Sewer from manhole at Sta. 29+68.0 to existing 8" sanitary in Maintenance Yard as shown on Sheet 16.
6. Contractor shall construct new 8" V.C.P. Sanitary Sewer from manhole at Sta. 32+89.0 to existing 6" sanitary sewer from Construction Office as directed by the Engineer. Connect with flexible coupling.
7. Contractor shall remove existing 8" V.C.P. sanitary sewer and manhole from Sta. 34+80± to Sta. 36+00.0 and shall construct temporary and permanent replacement sewers and interconnections as shown on Sheet 8.
8. Contractor shall remove and replace 15" Storm Sewers and catch basins at Sta. 34+45± and at Sta. 35+50± as required to permit construction of New 60" R.C.P. Sanitary Sewer.

| | | | | | | | |
|---|---|---|---|---|---|---|---|
| GREELEY AND HANSEN ENGINEERS, 1211 NORTH WEST SHORE BLVD., TAMPA, FLORIDA 33607 | DESIGNED MDO, TLW<br>DRAWN AA<br>CHECKED TLW | APPROVED<br>DIR., DEPT. OF SANITARY SEWERS DATE<br>GREELEY AND HANSEN, ENGINEERS DATE | NO. 1 DATE 12/85 APP. CA REVISION: AS-BUILT PER FIELD SURVEY | SCALE: HORIZ. 1" = 50'; VERT. 1" = 5' | CITY OF TAMPA, FLORIDA<br>SEWAGE DISPOSAL SYSTEM<br>WEST RIVER INTERCEPTING SEWER REPLACEMENT | DIVISION B2-A<br>PLAN AND PROFILE<br>STA. 23+75 TO STA. 36+00 | PROJ. NO. 2023-400-06-23<br>SHEET 6 OF 24<br>DATE APRIL 1980 REV. 0 |

211-7

AASC 16943

211-008

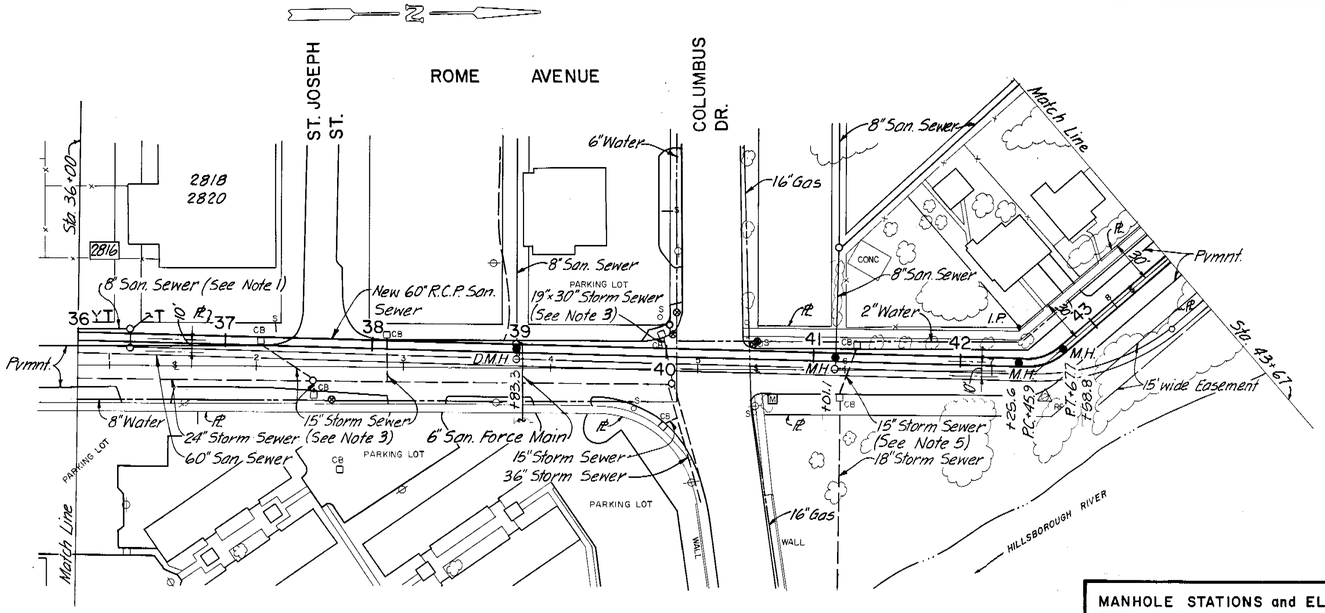


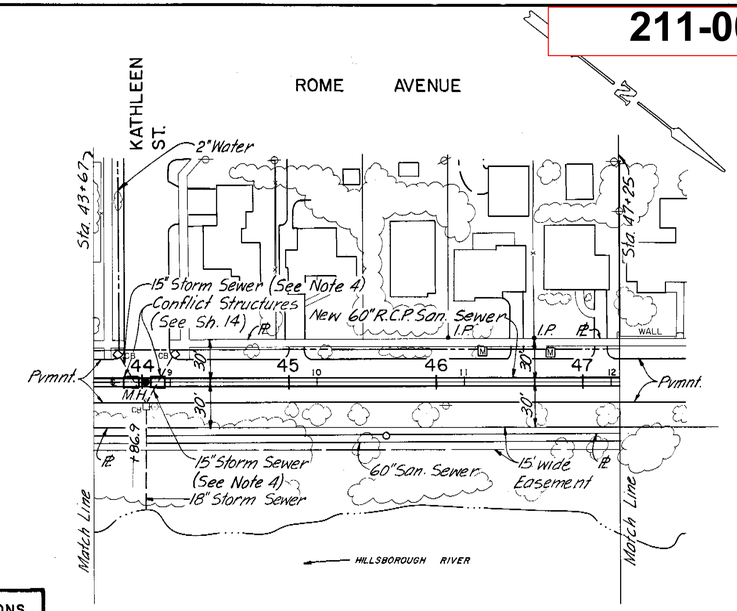


MANHOLE STATIONS and ELEVATIONS PER AS BUILT SURVEY INFORMATION

PLAN

AS-BUILT

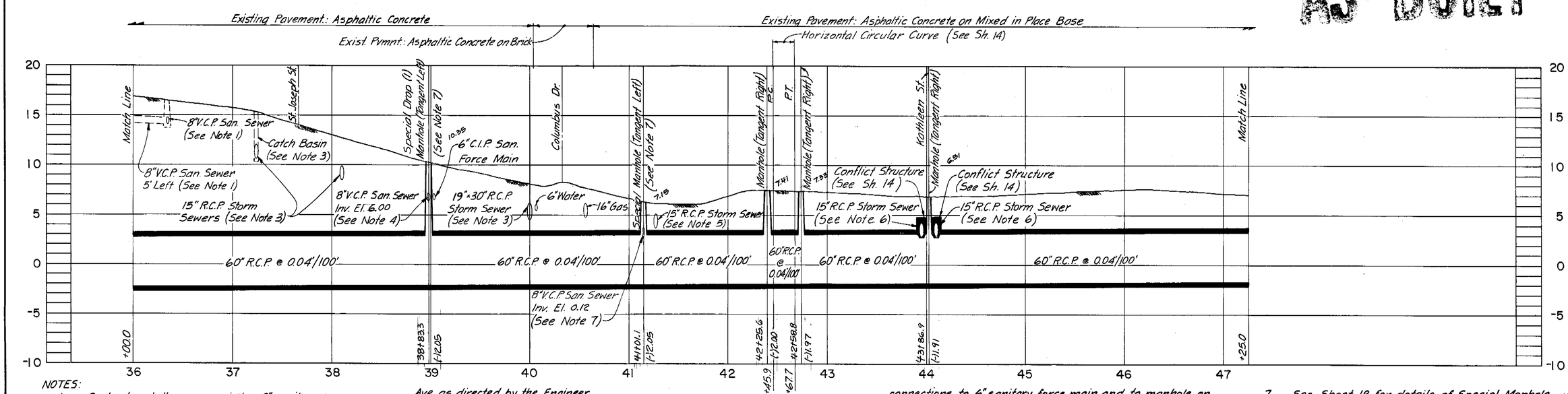


PROFILE

NOTES:

1. Contractor shall remove existing 8" sanitary sewer and manhole at Sta. 36+00.0 to Sta. 36+35± to permit construction of New 60" R.C.P. Sanitary Sewer and shall construct temporary and permanent replacement sewers as shown on Sheet 8.
2. Contractor shall construct Type C House Laterals to property lines at 2816 and 2818/2820 Rome Ave. as directed by the Engineer.
3. Contractor shall remove and replace 15" storm sewer and catch basins at Sta. 37+25± and 38+10± and the 19"×30" storm sewer at Sta. 40+00± as required to permit construction of the New 60" R.C.P. Sanitary Sewer.
4. Contractor shall remove manhole on existing 8" sanitary sewer at Sta. 38+98 and construct new replacement manhole with connections to 6" sanitary force main and to manhole on New 60" R.C.P. Sanitary Sewer as shown on Sheet 8.
5. Contractor shall remove 15" R.C.P. storm sewer at Sta. 41+25± and replace it with 14" D.I.P. (Class 51) storm sewer.
6. Contractor shall remove 15" storm sewers at Sta. 43+90± and Sta. 44+10± and replace them with 14" D.I.P. storm sewers as shown on Sheet 14.
7. See Sheet 18 for details of Special Manhole Modifications at Sta. 38+98.0 and Sta. 41+15.0.

| | | | | | | | |
|---|---|---|---|---|---|---|---|
| GREELEY AND HANSEN ENGINEERS, 1211 NORTH WEST SHORE BLVD., TAMPA, FLORIDA 33607 | DESIGNED MDO, TLW<br>DRAWN AA<br>CHECKED TLW | APPROVED<br>DIR., DEPT. OF SANITARY SEWERS — DATE<br>GREELEY AND HANSEN, ENGINEERS — DATE | NO. | DATE | APP. | REVISION | SCALE: HORIZ. 1" = 50'; VERT. 1" = 5' |
| | | | 1 | 12/85 | CL | AS-BUILT PER FIELD SURVEY | |

CITY OF TAMPA, FLORIDA
SEWAGE DISPOSAL SYSTEM
WEST RIVER INTERCEPTING SEWER REPLACEMENT

DIVISION B2-A
PLAN AND PROFILE
STA. 36+00 TO STA. 47+25

PROJ. NO. 2023-400-06-23
SHEET 7 OF 24
DATE APRIL 1980 REV. 0

211-8

AASC 16943

211-009

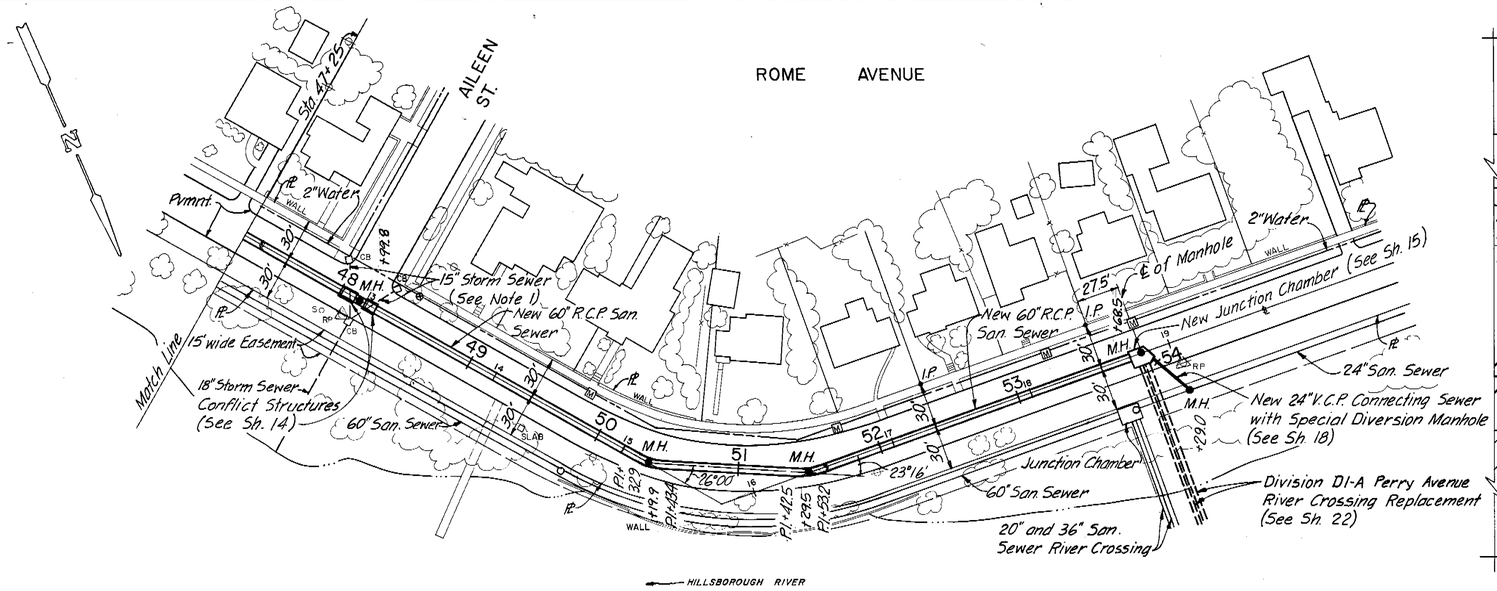


MANHOLE STATIONS and ELEVATIONS PER AS BUILT SURVEY INFORMATION

PLAN

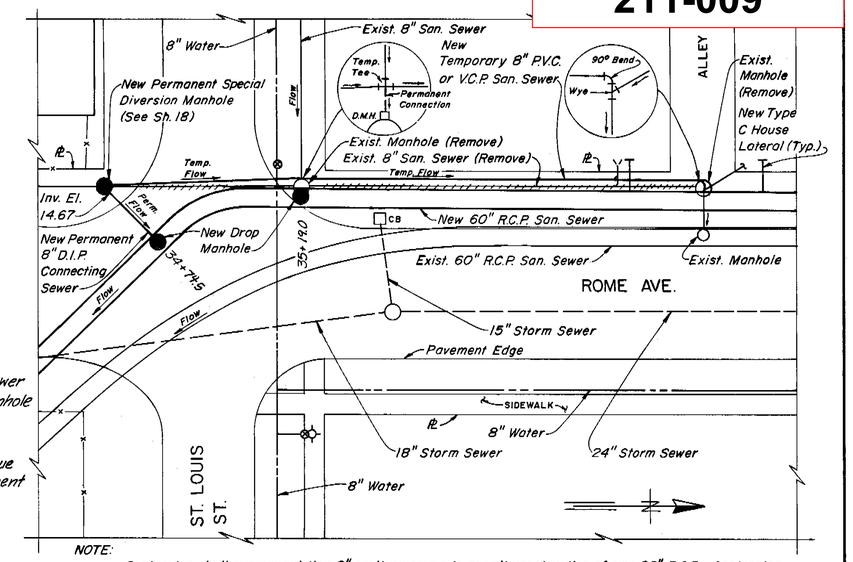


NOTE:

Contractor shall remove existing 8" sanitary sewer to permit construction of new 60" R.C.P.. Contractor shall then install temporary 8" sanitary sewer, permanent Special Diversion Manhole, Connecting Sewer, and Type C House Laterals as shown. When new 60" R.C.P. is placed in service, Contractor shall divert flow at New Special Diversion Manhole, remove temporary tee and connect 8" sewer directly to drop connection at New Drop Manhole at Sta. 35+19.0, connect existing house laterals to new Type C house laterals, and abandon and remove or plug temporary sewer, all as directed by the Engineer. Contractor shall maintain continuous sanitary service during construction.

DETAIL STA. 34+80± TO STA. 36+35±

SCALE: 1"=20'

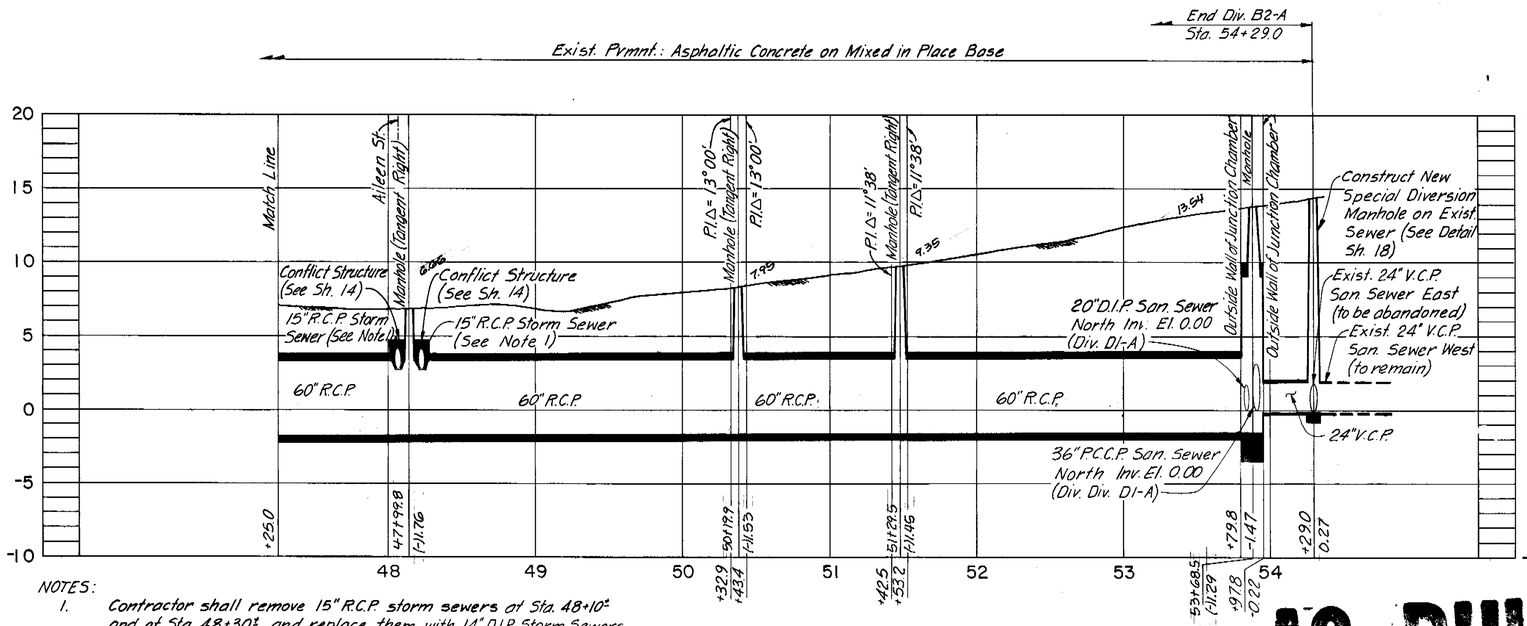


NOTES:

1. Contractor shall remove 15" R.C.P. storm sewers at Sta. 48+10± and at Sta. 48+30± and replace them with 14" D.I.P. Storm Sewers as shown on Sheet 14.

PROFILE

AS BUILT

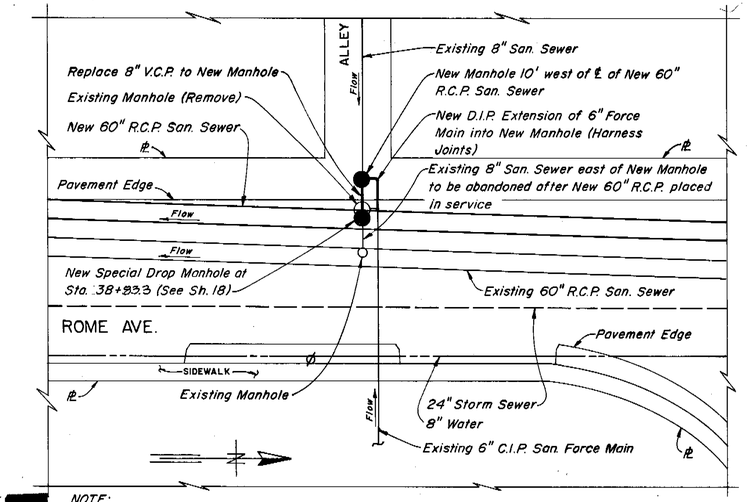


NOTE:

Contractor shall maintain continuous sanitary service during construction by approved temporary method.

DETAIL AT STA. 38+83.3

SCALE: 1"=20'

| | | | | | | |
|---|---|---|---|---|---|---|
| GREELEY AND HANSEN ENGINEERS, 1211 NORTH WEST SHORE BLVD. TAMPA, FLORIDA 33607 | DESIGNED MDO, TLW<br>DRAWN AA<br>CHECKED TLW | APPROVED<br>DATE<br>DIR., DEPT. OF SANITARY SEWERS<br>DATE<br>GREELEY AND HANSEN, ENGINEERS | NO. 1 DATE 12/85 APP. CJ REVISION: AS-BUILT PER FIELD SURVEY | SCALE<br>HORIZ. 1" = 50'<br>VERT. 1" = 5' | CITY OF TAMPA, FLORIDA<br>SEWAGE DISPOSAL SYSTEM<br>WEST RIVER INTERCEPTING SEWER REPLACEMENT | DIVISION B2-A<br>PLAN AND PROFILE<br>STA. 47+25 TO STA. 54+29 | PROJ. NO. 2023-400-06-23<br>SHEET 8 OF 24<br>DATE APRIL 1980 REV. 0 |

211-9

AASC 16943

211-010

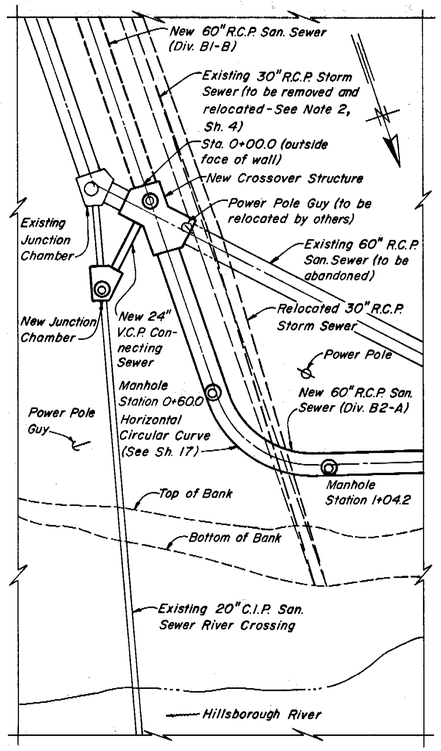


SITE PLAN
SCALE: 1" = 20'

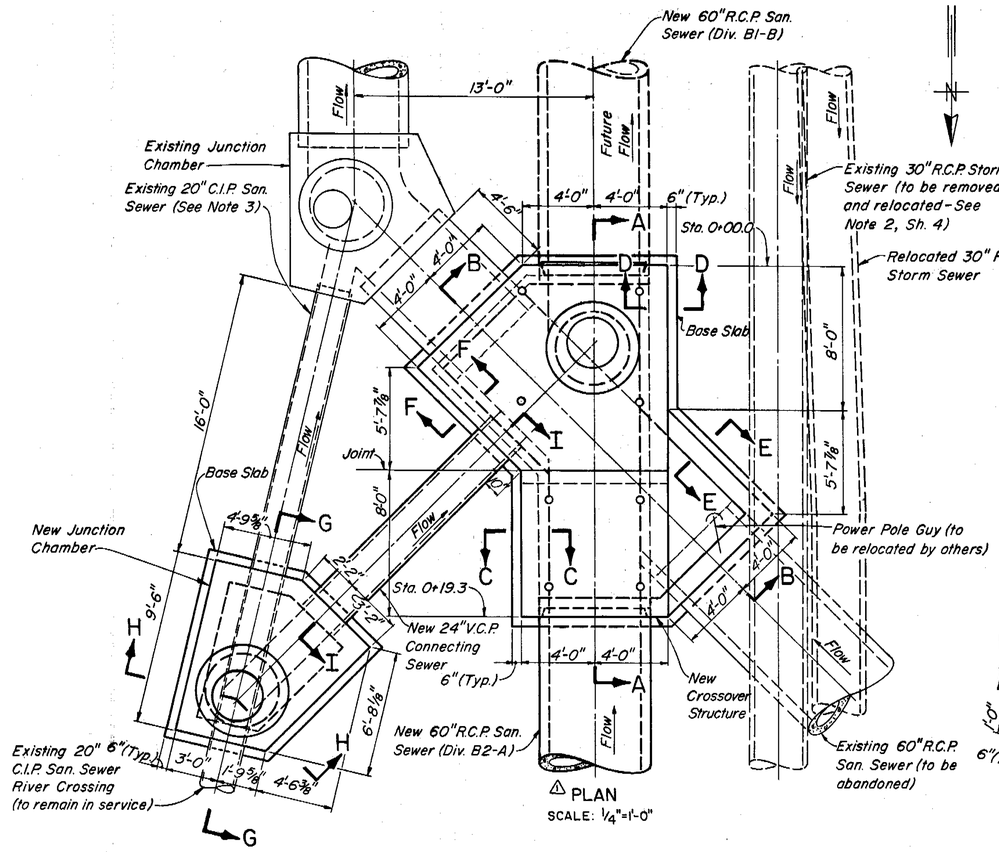


△ PLAN
SCALE: 1/4" = 1'-0"

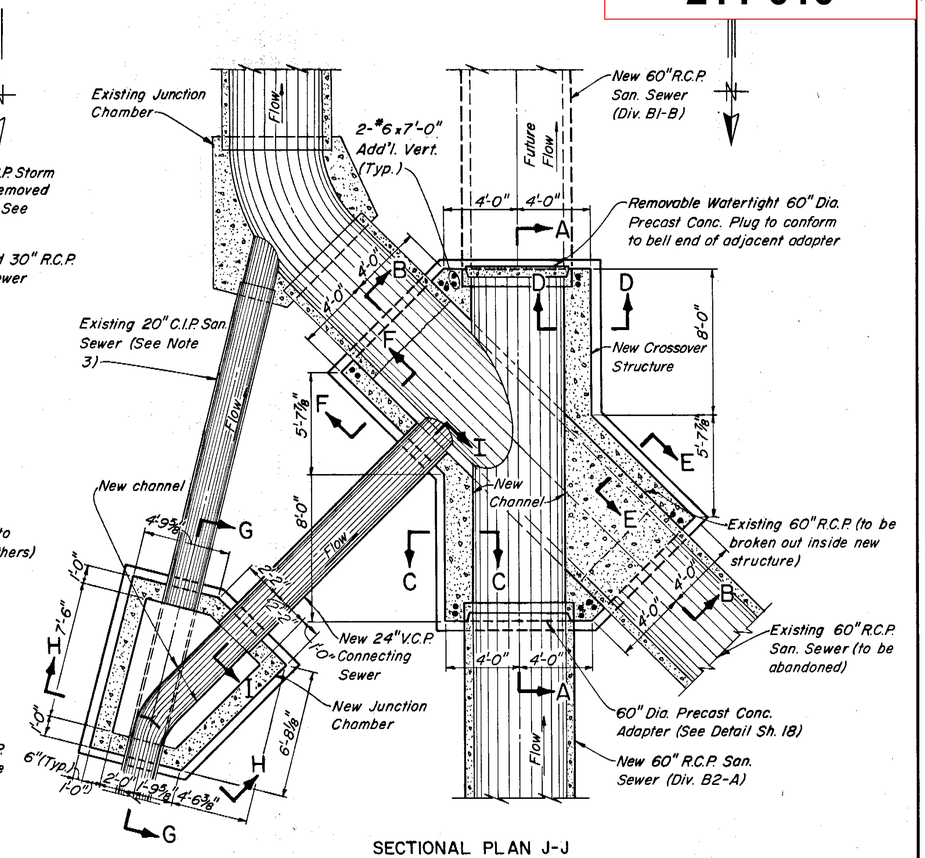


SECTIONAL PLAN J-J
SCALE: 1/4" = 1'-0"

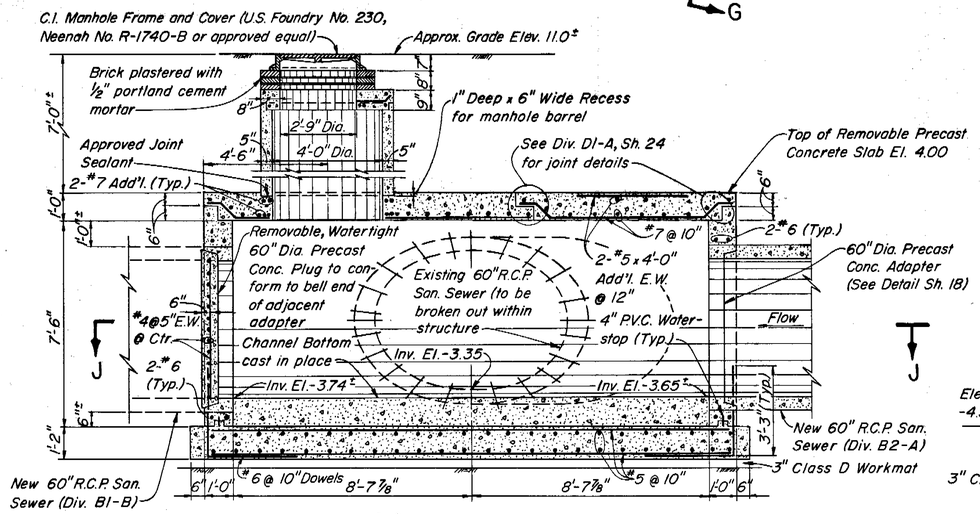


△△ SECTION A-A
SCALE: 3/8" = 1'-0"

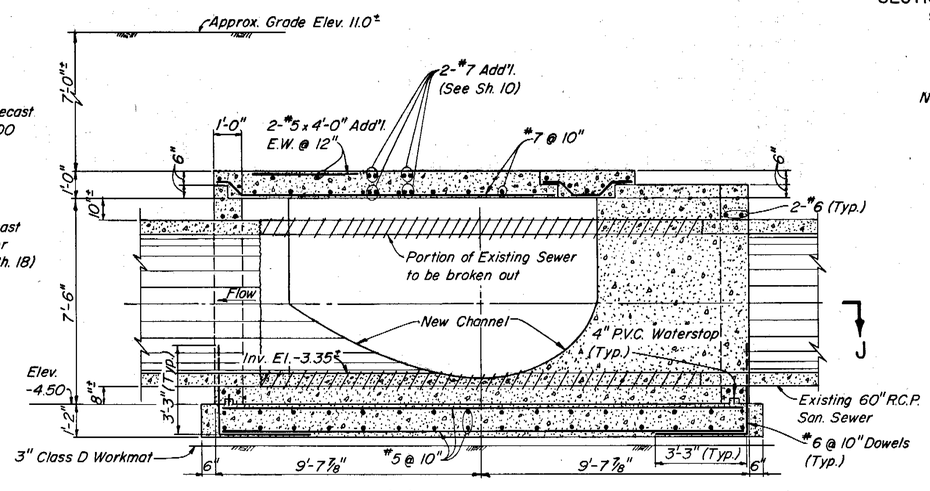


△△ SECTION B-B
SCALE: 3/8" = 1'-0"

NOTES:

1. All exposed interior surfaces of the Crossover Structure from the center line of the new 60" R.C.P. to the top of the manhole top slab shall be lined with plastic sheet in accordance with the Specifications.
2. Refer to Sheet 17 for sequence of construction.
3. Contractor shall fill existing 20" C.I.P. between new and existing junction chambers with grout after New Crossover Structure is placed in service.

AS BUILT

| | | | | | | | |
|---|---|---|---|---|---|---|---|
| GREELEY AND HANSEN ENGINEERS, 1211 NORTH WEST SHORE BLVD., TAMPA, FLORIDA 33607 | DESIGNED RSH, JFS<br>DRAWN AA<br>CHECKED TLW | APPROVED _____ DATE _____<br>DIR., DEPT. OF SANITARY SEWERS<br>_____ DATE _____<br>GREELEY AND HANSEN, ENGINEERS | NO. | DATE | APP. | REVISION | SCALE: 20 0 20 40 FT. 1" = 20'; 4 0 4 8 FT. 1/4" = 1'-0"; 1 0 1 2 3 4 5 6 7 FT. 3/8" = 1'-0" |
| | | | △ | 8/27/81 | TLW | Rev. C.S. Top Slab & Wall Reinf. | |
| | | | △ | 8/27/81 | TLW | Rev. C.S. Top Slab to Precast | |

CITY OF TAMPA, FLORIDA
SEWAGE DISPOSAL SYSTEM
WEST RIVER INTERCEPTING SEWER REPLACEMENT

DIVISION B2-A
CROSSOVER STRUCTURE AND JUNCTION CHAMBER AT NORTH BLVD.

PROJ. NO. 2023-400-06-23
SHEET 9 OF 24
DATE APRIL 1980 REV. 2

211-10

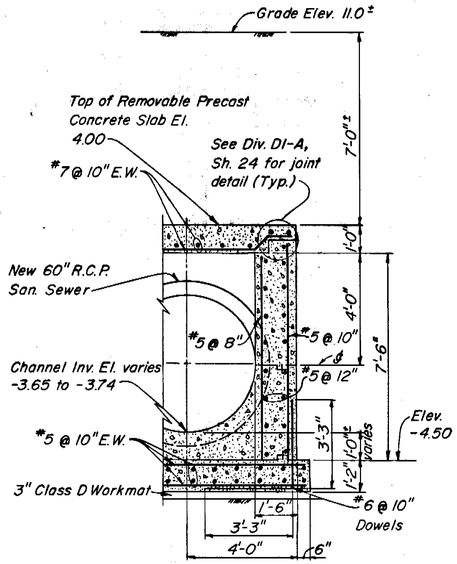


SECTION C-C
(SECTION D-D SAME EXCEPT FOR MANHOLE OPENING)
SCALE: 3/8"=1'-0"

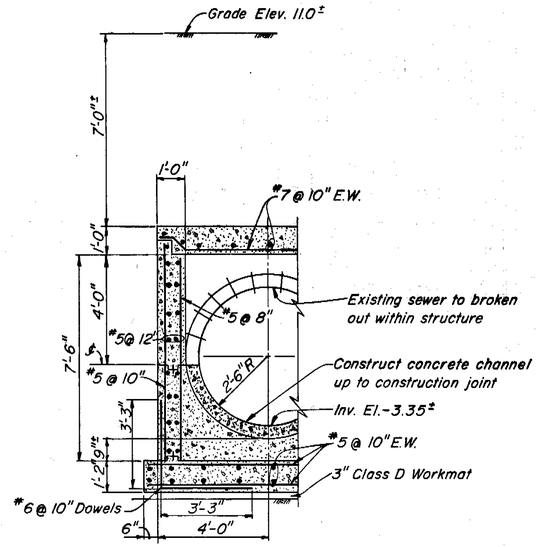


SECTION F-F
(SECTION E-E SAME EXCEPT FILL WITH CONCRETE AND NO TOP SLAB)
SCALE: 3/8"=1'-0"

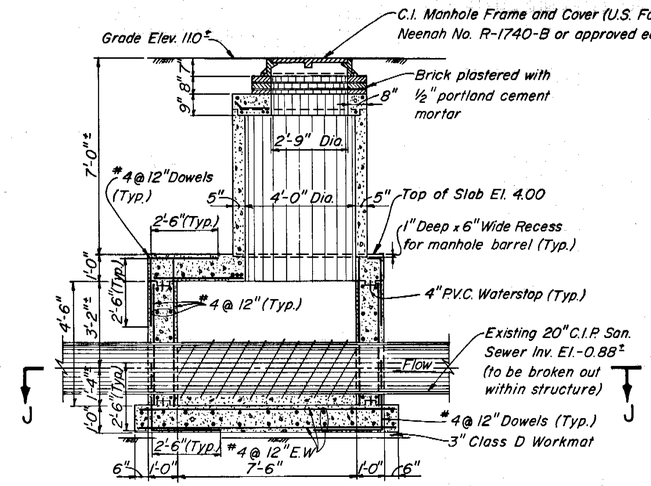


SECTION G-G
SCALE: 3/8"=1'-0"

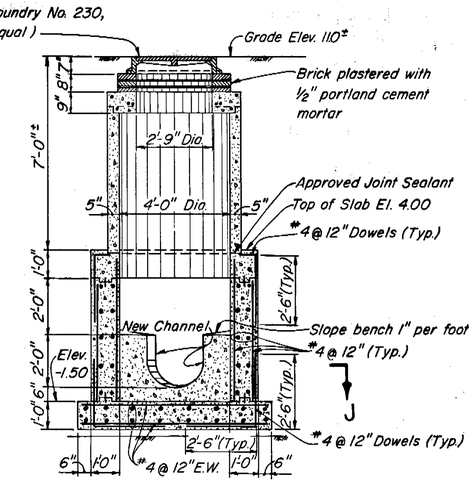


SECTION H-H
(EXISTING 20" C.I.P. REMOVED)
SCALE: 3/8"=1'-0"

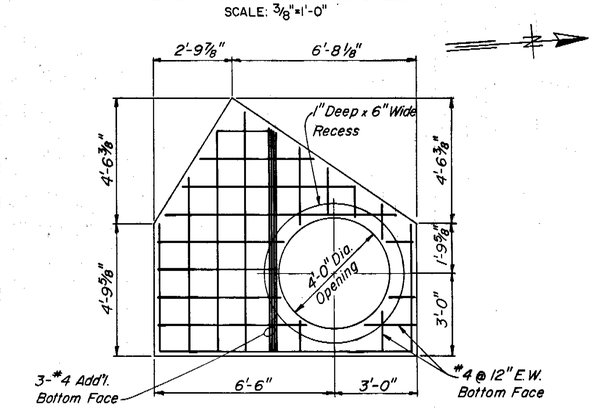


JUNCTION CHAMBER TOP SLAB
SCALE: 3/8"=1'-0"

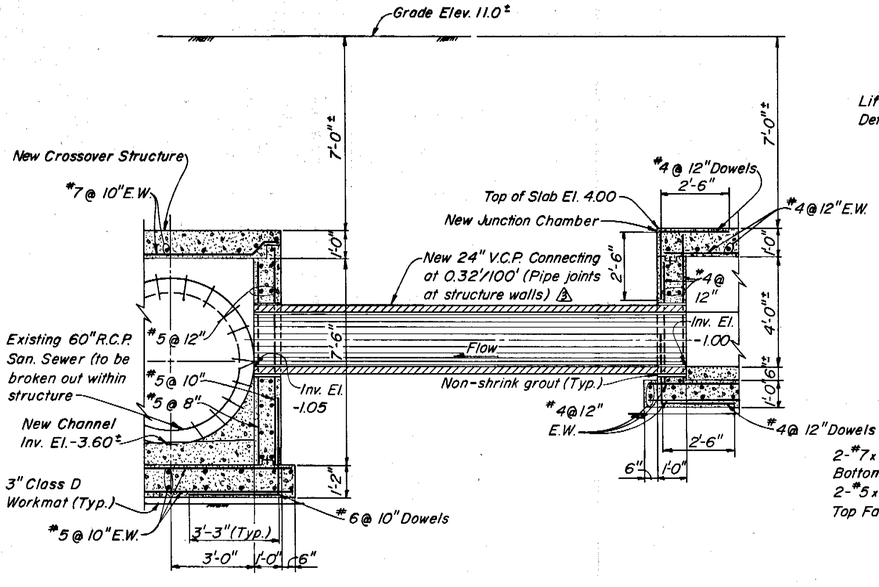


SECTION I-I
SCALE: 3/8"=1'-0"

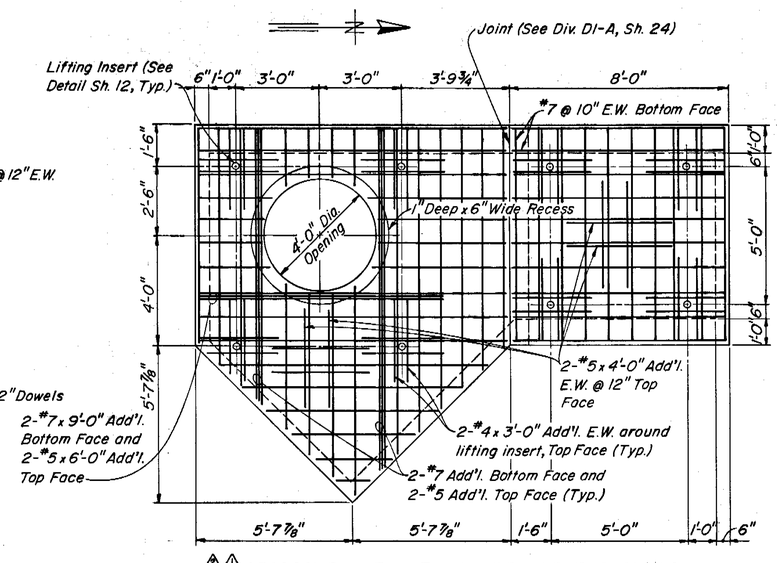


CROSSOVER STRUCTURE PRECAST TOP SLABS
SCALE: 3/8"=1'-0"

NOTE:
All interior surfaces of the Junction Chamber shall be lined with plastic sheet in accordance with the Specifications from 6" below the top of the bench to the top of the manhole top slab.

AS BUILT

| | | | | | | |
|---|---|---|---|---|---|---|
| GREELEY AND HANSEN ENGINEERS, 1211 NORTH WEST SHORE BLVD., TAMPA, FLORIDA 33607 | DESIGNED RSH, JFS<br>DRAWN AA<br>CHECKED TLW | APPROVED<br>DIR., DEPT. OF SANITARY SEWERS — DATE<br>GREELEY AND HANSEN, ENGINEERS — DATE | NO. / DATE / APP. / REVISION<br>2 8/31/81 TLW Added joints at walls, 24" V.C.P.<br>2 8/27/81 TLW Rev. C.S. Top Slab & Wall Reinf.<br>1 8/27/81 TLW Rev. C.S. Top Slab to Precast | SCALE<br>1 0 1 2 3 4 5 6 7 FT. 3/8"=1'-0" | CITY OF TAMPA, FLORIDA<br>SEWAGE DISPOSAL SYSTEM<br>WEST RIVER INTERCEPTING SEWER REPLACEMENT | DIVISION B2-A<br>CROSSOVER STRUCTURE AND JUNCTION CHAMBER AT NORTH BLVD. | PROJ. NO. 2023-400-06-23<br>SHEET 10 OF 24<br>DATE APRIL 1980 REV. 3 |

211-11

211-012

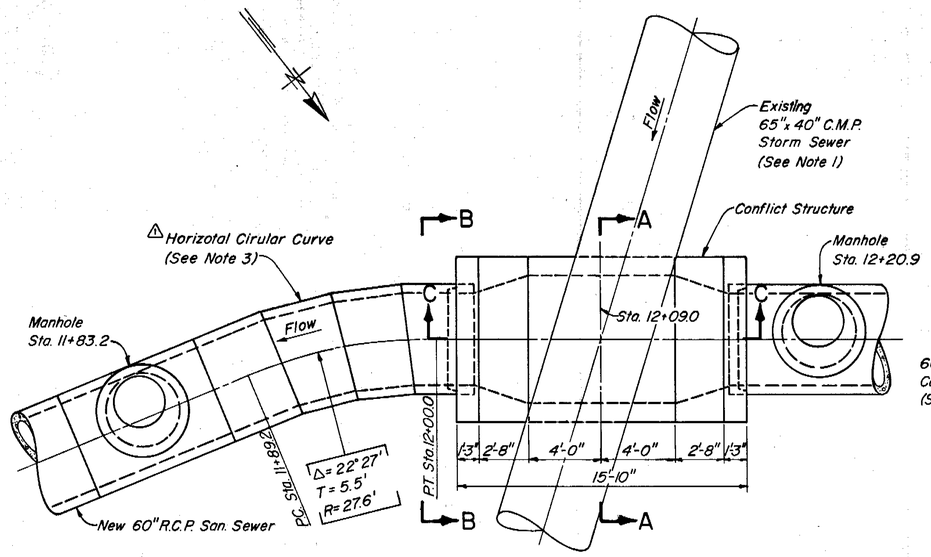


PLAN
SCALE: 1/4"=1'-0"

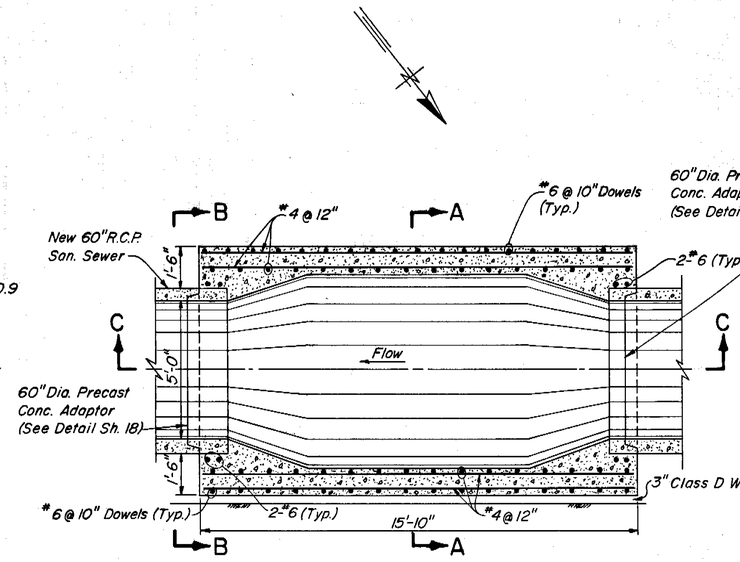


SECTIONAL PLAN D-D
SCALE: 3/8"=1'-0"

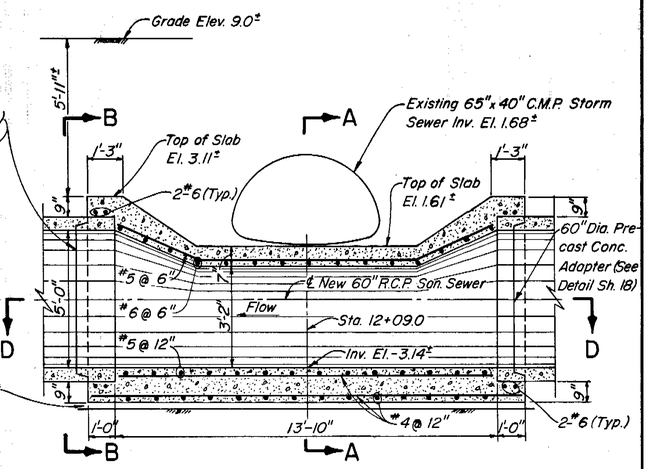


SECTION C-C
SCALE: 3/8"=1'-0"

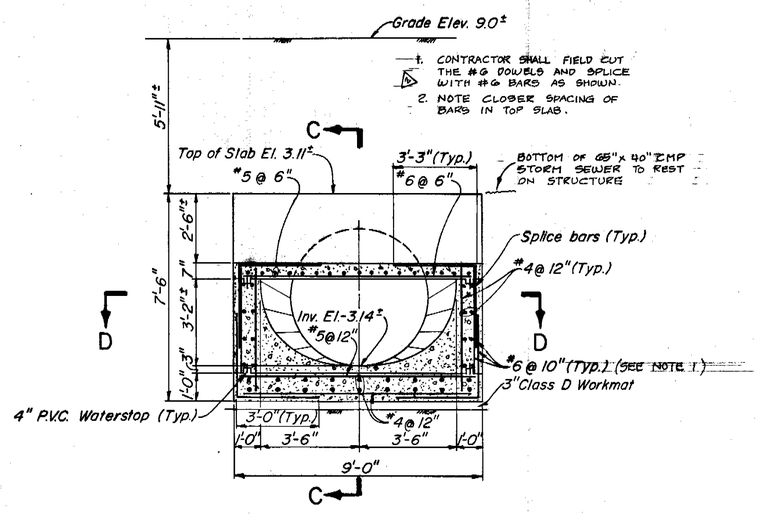


SECTION A-A
SCALE: 3/8"=1'-0"

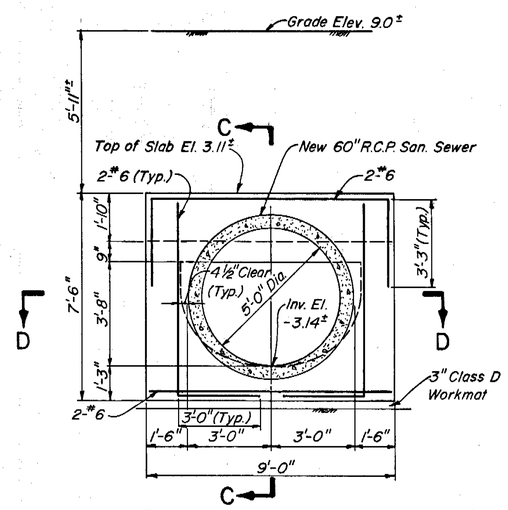


SECTION B-B
SCALE: 3/8"=1'-0"

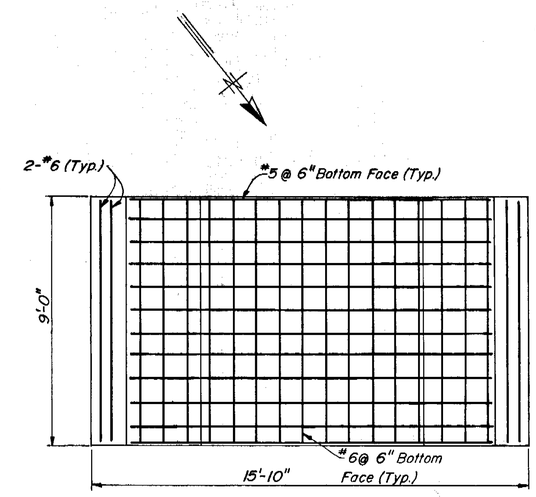


TOP SLAB
SCALE: 3/8"=1'-0"

NOTES:

1. Contractor shall remove existing 65"x 40" C.M.P. as required to construct Conflict Structure and shall replace it with 65"x 40" C.M.P. (same gauge thickness and corrugations as existing pipe).
2. All interior surfaces of the Conflict Structure, with the exception of the bottom 60 degrees of arc, shall be lined with plastic sheet in accordance with the Specifications.
3. Horizontal circular curves shall be constructed with short bevel pipes in combination (if necessary) with mitered bends conforming as closely as possible to the true circular curve shown.

AS-BUILT

| | | | | | | | |
|---|---|---|---|---|---|---|---|
| GREELEY AND HANSEN ENGINEERS, 1211 NORTH WEST SHORE BLVD. TAMPA, FLORIDA 33607 | DESIGNED MDO, JFS<br>DRAWN AA<br>CHECKED TLW | APPROVED<br>DIR., DEPT. OF SANITARY SEWERS DATE<br>GREELEY AND HANSEN, ENGINEERS DATE | NO. | DATE | APP. | REVISION | SCALE: 4 0 4 8 FT. 1/4"=1'-0"; 1 0 1 2 3 4 5 6 7 FT. 3/8"=1'-0" |
| | | | 2 | 12/85 | CK | AS-BUILT / ADDED NOTE 1 & 2 | |
| | | | 1 | 8/31/81 | TLW | Add Note 3, Delete 4'-0" on Detail | |

CITY OF TAMPA, FLORIDA
SEWAGE DISPOSAL SYSTEM
WEST RIVER INTERCEPTING SEWER REPLACEMENT

DIVISION B2-A
CONFLICT STRUCTURE AT STA. 12+09.0

PROJ. NO. 2023-400-06-23
SHEET 11 OF 24
DATE APRIL 1980 REV. 1

211-12

211-013

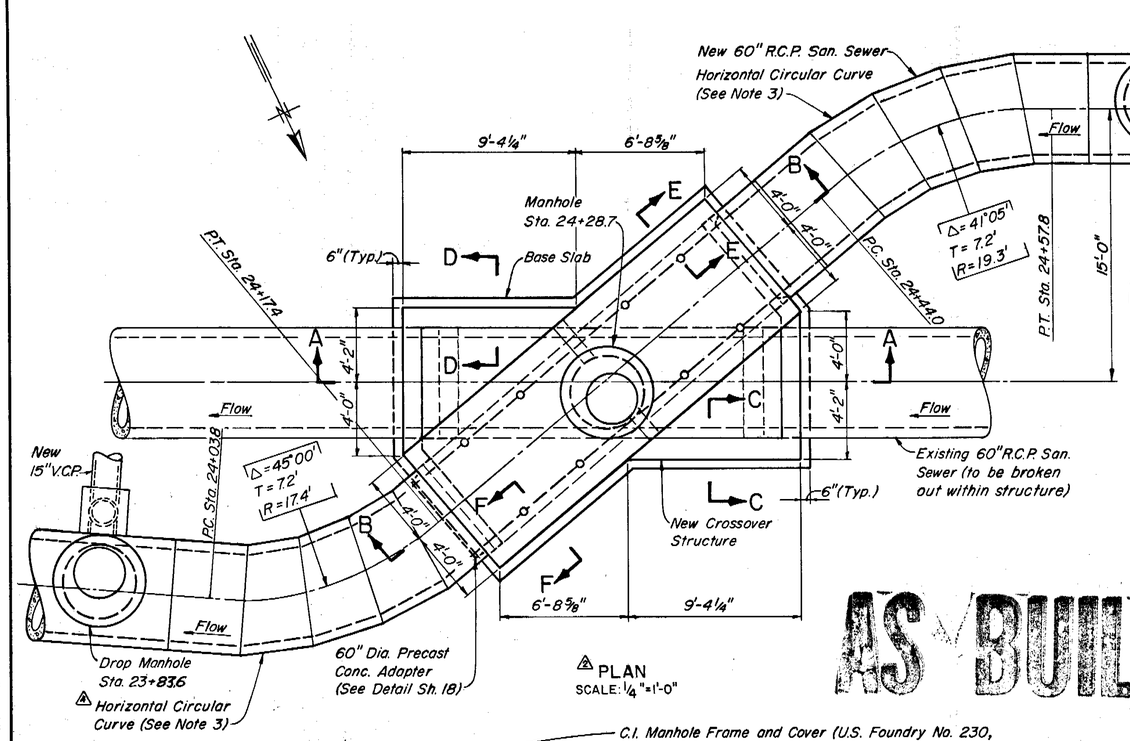


PLAN
SCALE: ¼"=1'-0"

AS BUILT

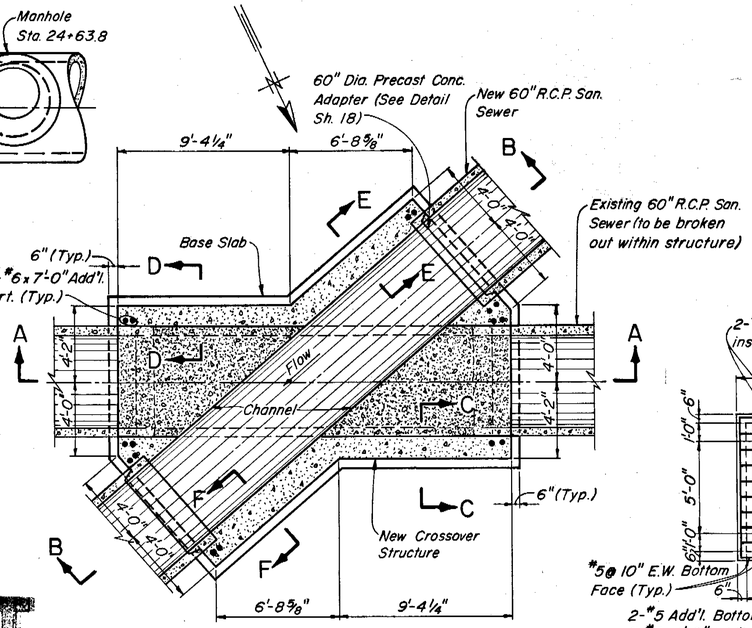


SECTIONAL PLAN G-G
SCALE: ¼"=1'-0"

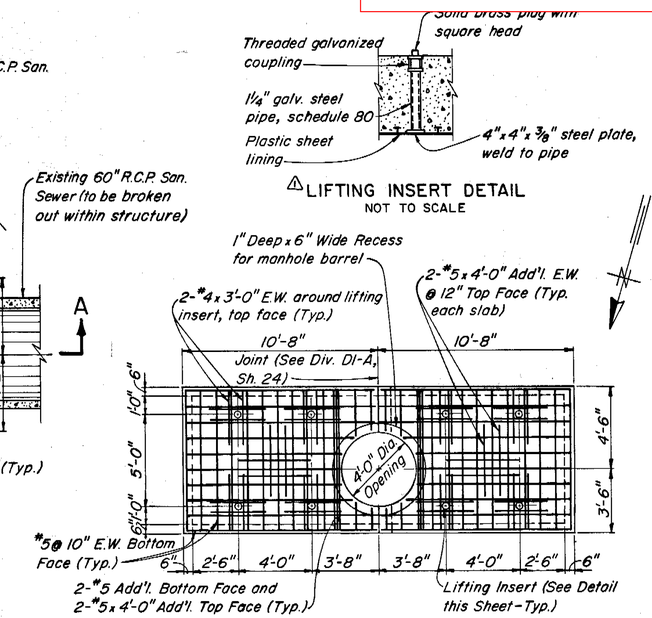


CROSSOVER STRUCTURE PRECAST TOP SLABS
SCALE: ¼"=1'-0"

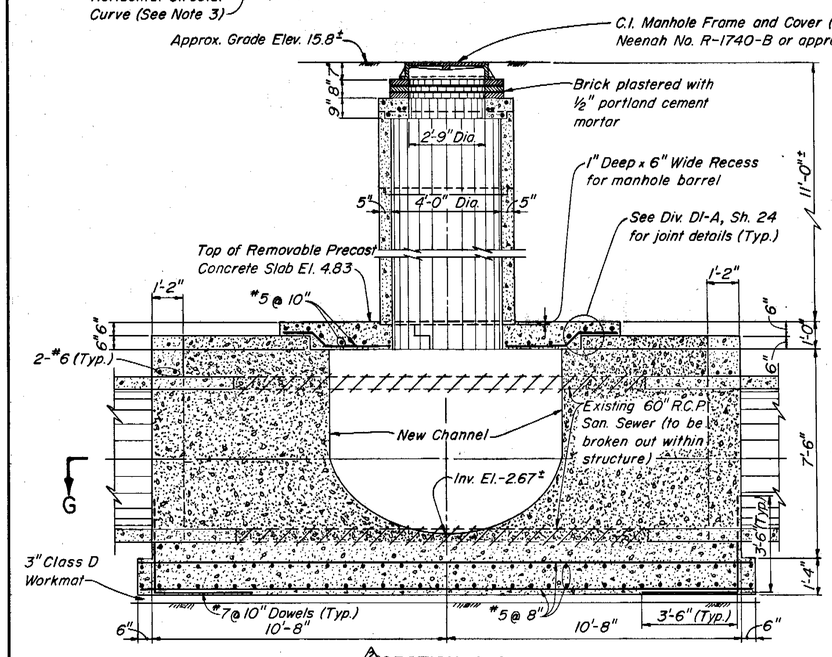


SECTION A-A
SCALE: ⅜"=1'-0"

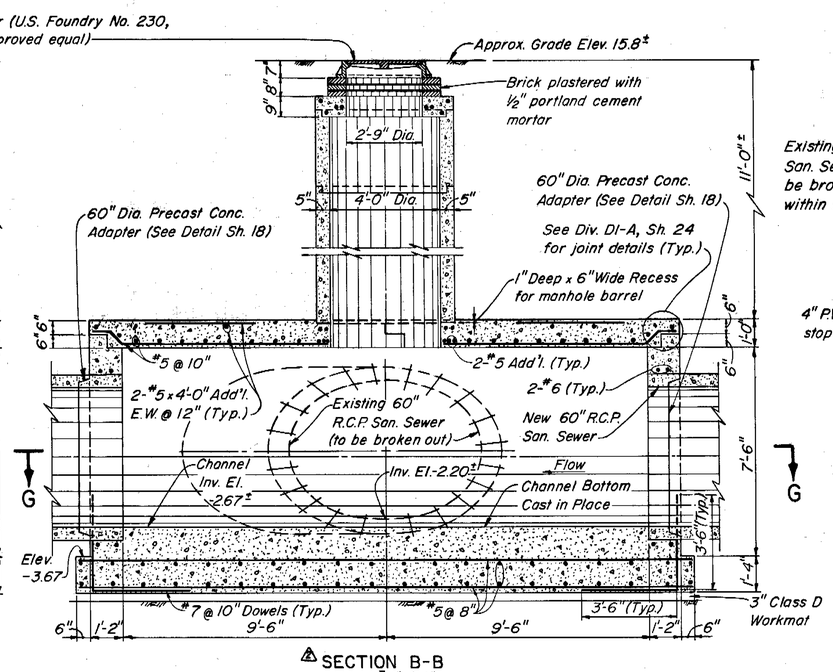


SECTION B-B
SCALE: ⅜"=1'-0"

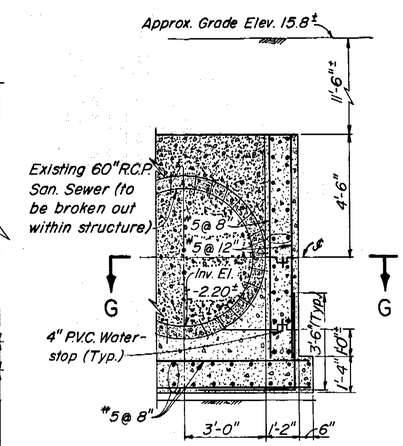


SECTION C-C
(SECTION D-D SAME)
SCALE: ⅜"=1'-0"

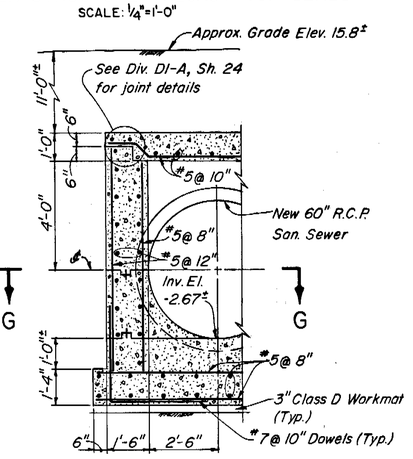


SECTION E-E
(SECTION F-F SAME)
SCALE: ⅜"=1'-0"

NOTES:

1. All exposed interior surfaces of the Crossover Structure from the center line of the new 60" R.C.P. to top of the manhole top slab shall be lined with plastic sheet in accordance with the Specifications.
2. Refer to Sheet 17 for sequence of construction.
3. Horizontal circular curves shall be constructed with short bevel pipes in combination (if necessary) with mitered bends conforming as closely as possible to the true circular curve shown.

| | | | | | | |
|---|---|---|---|---|---|---|
| GREELEY AND HANSEN ENGINEERS, 1211 NORTH WEST SHORE BLVD., TAMPA, FLORIDA 33607 | DESIGNED RSH,MDO,JFS | APPROVED | 3 8/28/81 TLW Add Note 3, Delete 4'-0" on Curves | SCALE: 1/4"=1'-0" (4 0 4 8 FT.); 3/8"=1'-0" (0 1 2 3 4 5 6 7 FT.) | CITY OF TAMPA, FLORIDA<br>SEWAGE DISPOSAL SYSTEM<br>WEST RIVER INTERCEPTING SEWER REPLACEMENT | DIVISION B2-A<br>CROSSOVER STRUCTURE AT OREGON AVE. | PROJ. NO. 2023-400-06-23 |
| | DRAWN AA | DIR., DEPT. OF SANITARY SEWERS DATE | 2 8/28/81 TLW Rev. Top Slab & Wall Reinforcing | | | | SHEET 12 OF 24 |
| | CHECKED TLW | GREELEY AND HANSEN, ENGINEERS DATE | 1 8/28/81 TLW Rev. Top Slab to Precast | | | | DATE APRIL 1980 REV. 4 |
| | | | 0 8/28/81 TLW Added Lifting Insert Detail | | | | |
| | | | NO. DATE APP. REVISION | | | | |

211-13

211-014

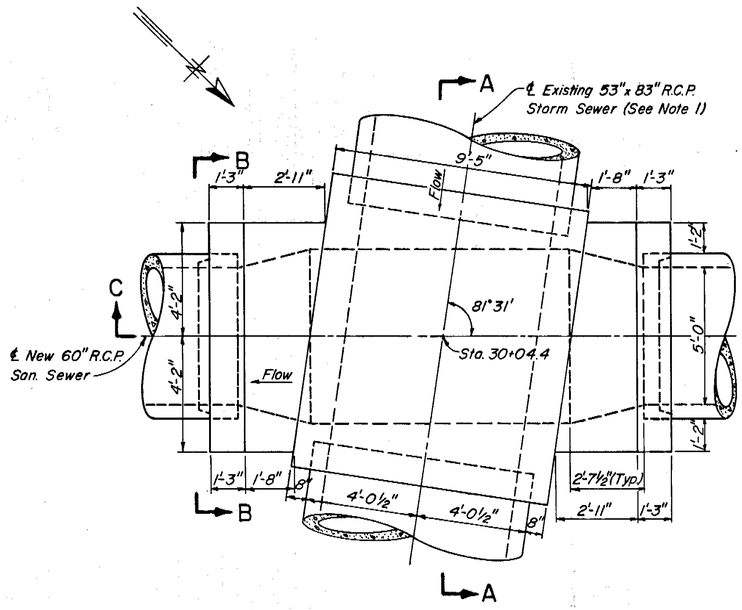


PLAN
SCALE: 3/8"=1'-0"

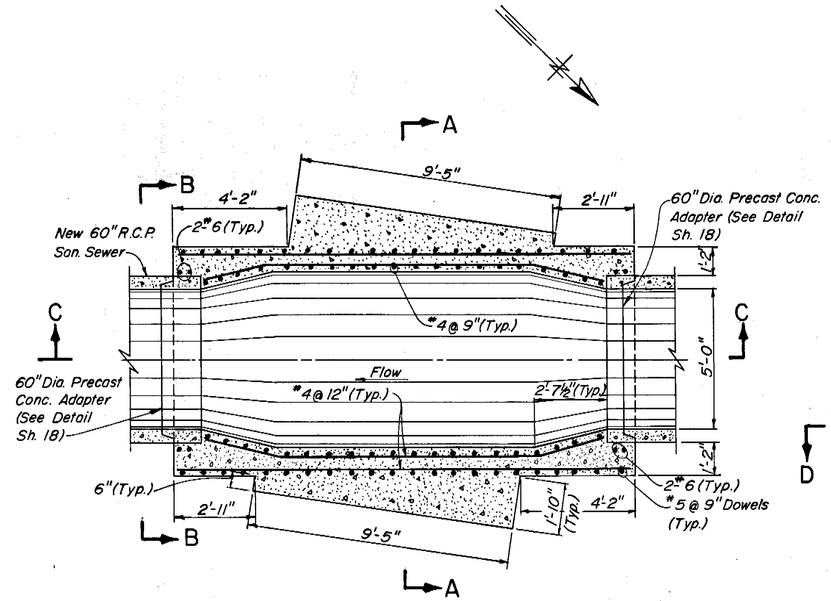


SECTIONAL PLAN D-D
SCALE: 3/8"=1'-0"

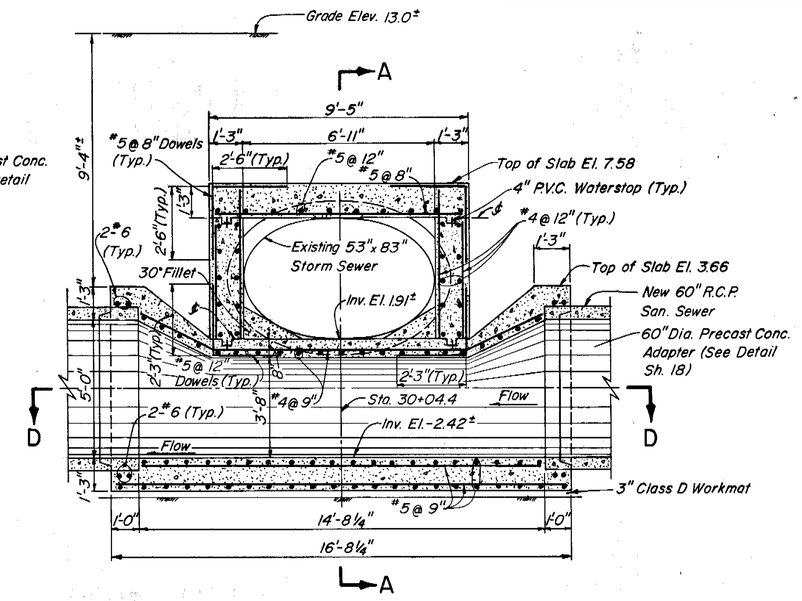


SECTION C-C
SCALE: 3/8"=1'-0"

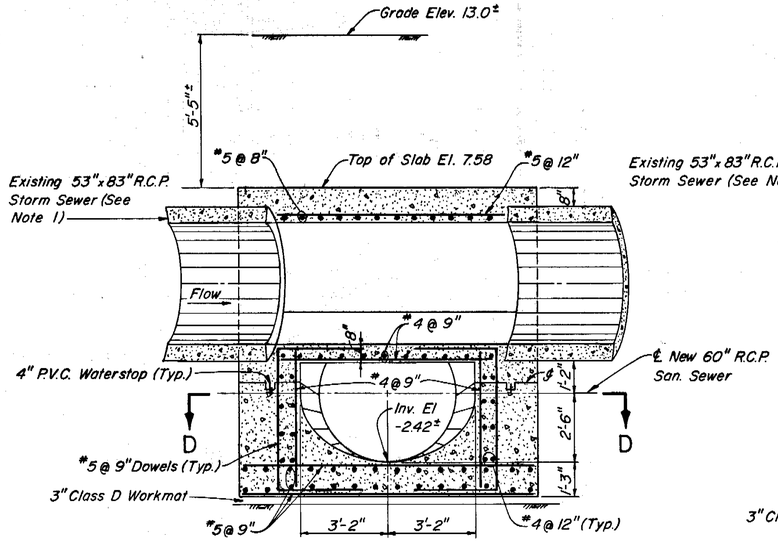


SECTION A-A
SCALE: 3/8"=1'-0"

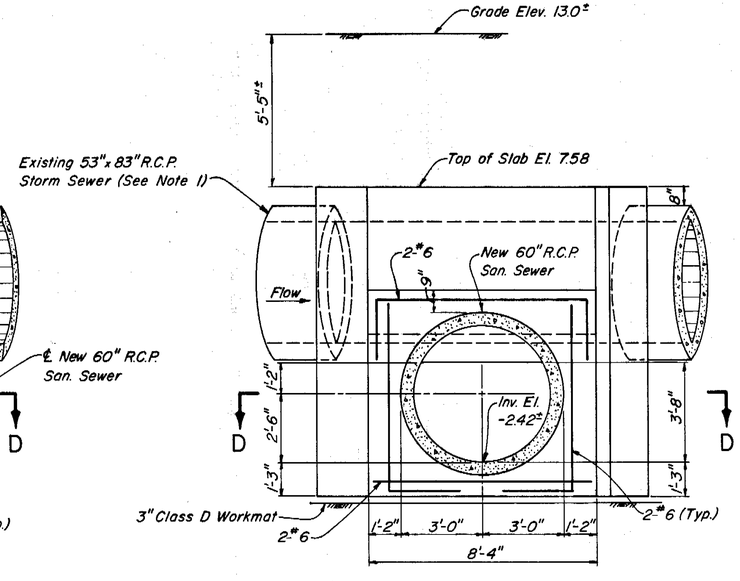


SECTION B-B
SCALE: 3/8"=1'-0"

NOTES:

1. Contractor shall remove 53"x 83" R.C.P. as required to construct lower portion of Conflict Structure and shall replace such removed pipe sections adjacent to the structure with new 53"x 83" R.C.P.
2. All interior surfaces of the sanitary sewer portion of the Conflict Structure, with the exception of the bottom 60 degrees of arc, shall be lined with plastic sheet in accordance with the Specifications.

AS-BUILT

| | | | | | | | | |
|---|---|---|---|---|---|---|---|---|
| GREELEY AND HANSEN ENGINEERS, 1211 NORTH WEST SHORE BLVD., TAMPA, FLORIDA 33607 | DESIGNED MDO, JFS<br>DRAWN AA<br>CHECKED TLW | APPROVED<br>DIR., DEPT. OF SANITARY SEWERS — DATE<br>GREELEY AND HANSEN, ENGINEERS — DATE | NO. | DATE | APP. | REVISION | SCALE 1 0 1 2 3 4 5 6 7 FT 3/8"=1'-0" | CITY OF TAMPA, FLORIDA<br>SEWAGE DISPOSAL SYSTEM<br>WEST RIVER INTERCEPTING SEWER REPLACEMENT |

DIVISION B2-A
CONFLICT STRUCTURE AT STA. 30+04.4

PROJ. NO. 2023-400-06-23
SHEET 13 OF 24
DATE APRIL 1980 REV. 0

211-014

211-015

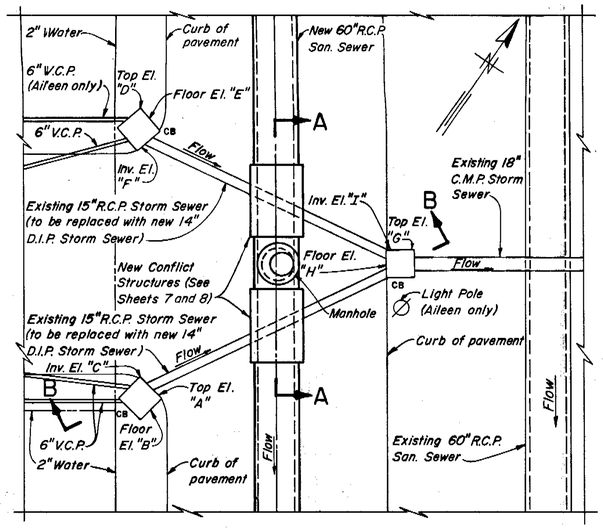


CONFLICT STRUCTURES
TYPICAL SITE PLAN
SCALE: 1"=10'

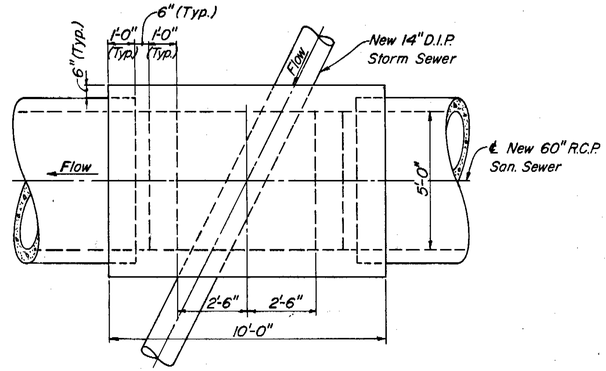


CONFLICT STRUCTURE
TYPICAL PLAN
SCALE: 3/8"=1'-0"

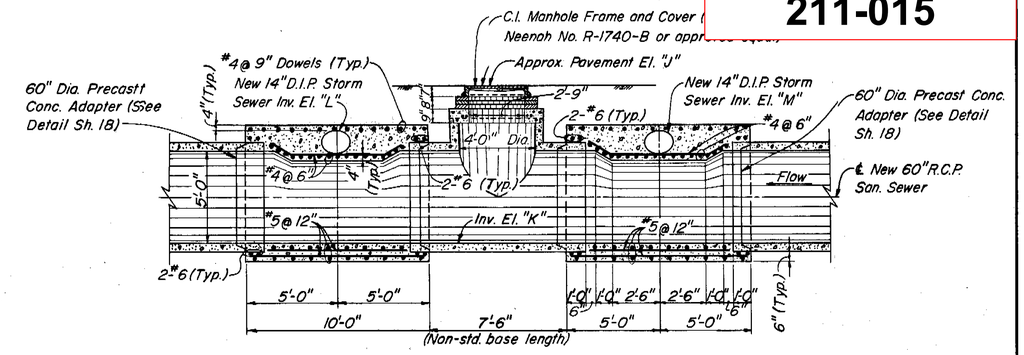


SECTION A-A
SCALE: 1/4"=1'-0"

NOTE: 1.
All interior surfaces of the Conflict Structure, with the exception of the bottom 60 degrees of arc, shall be lined with plastic sheet in accordance with the Specifications.

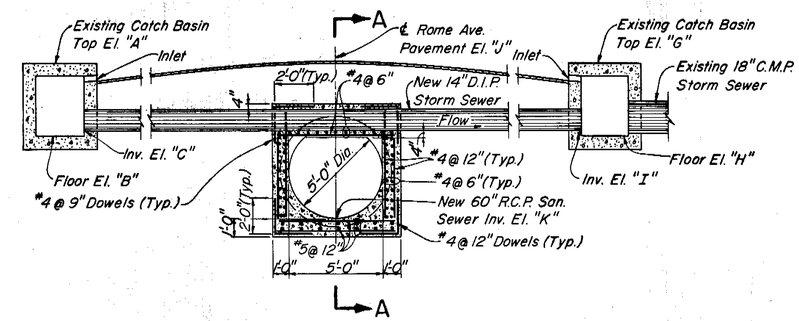


SECTION B-B
(LOOKING NORTHWEST-TYPICAL)
SCALE: 1/4"=1'-0"

NOTE: 2
New 14" D.I.P. shall be Class 51.

AS BUILT

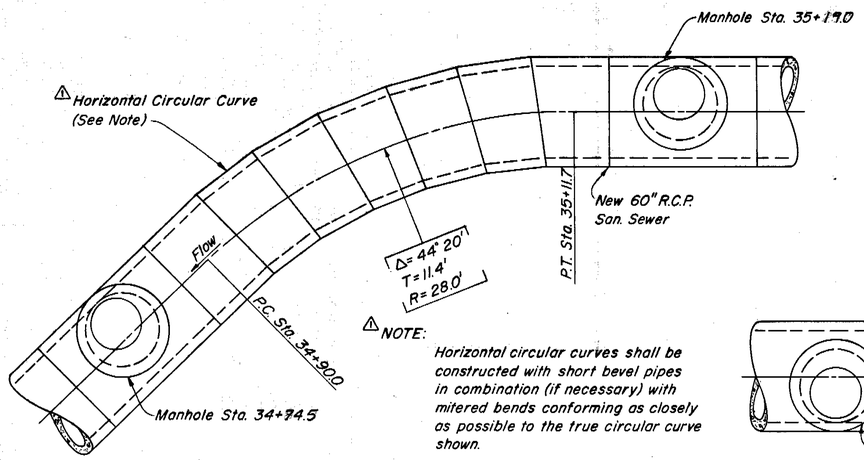


NOTE:
Horizontal circular curves shall be constructed with short bevel pipes in combination (if necessary) with mitered bends conforming as closely as possible to the true circular curve shown.

DETAIL AT STA. 35+05±
SCALE: 1/4"=1'-0"

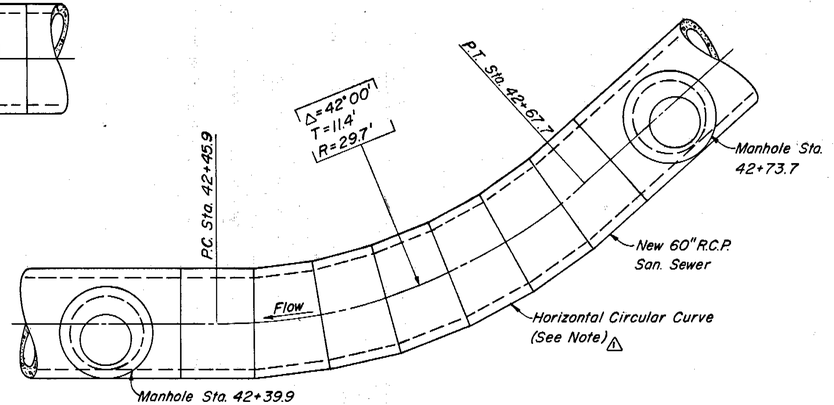


DETAIL AT STA. 42+50±
SCALE: 1/4"=1'-0"

CURVE DETAILS

CONFLICT STRUCTURES AT KATHLEEN ST AND AILEEN ST.

| ELEVATIONS-CONFLICT STRUCTURES | | | | | | | | | | | | | |
|---|---|---|---|---|---|---|---|---|---|---|---|---|---|
| LOCATION | ELEVATION | | | | | | | | | | | | |
| | A | B | C | D | E | F | G | H | I | J | K | L | M |
| KATHLEEN ST. | 6.78 | 3.06 | 3.34 | 6.83 | 3.02 | 3.30 | 6.73 | 2.98 | 3.26 | 6.95 | -1.87 | 3.29 | 3.27 |
| AILEEN ST. | 6.66 | 2.98 | 3.26 | 6.92 | 3.17 | 3.45 | 6.79 | 2.74 | 3.02 | 6.87 | -1.70 | 3.11 | 3.18 |

GREELEY AND HANSEN
ENGINEERS
1211 NORTH WEST SHORE BLVD.
TAMPA, FLORIDA 33607

DESIGNED MDO
DRAWN AA
CHECKED TLW

APPROVED
DIR., DEPT. OF SANITARY SEWERS — DATE
GREELEY AND HANSEN, ENGINEERS — DATE

| NO. | DATE | APP. | REVISION |
|---|---|---|---|
| 1 | 8/28/81 | TLW | Added Note Re: Curve Details |

SCALE
1" = 10'
1/4" = 1'-0"
3/8" = 1'-0"

CITY OF TAMPA, FLORID
SEWAGE DISPOSAL SYSTEM
WEST RIVER INTERCEPTING SEWER REPLACEMENT

DIVISION B2-A
CONFLICT STRUCTURES AT KATHLEEN ST. AND AILEEN ST. AND MISCELLANEOUS DETAILS

PROJ. NO. 2023-400-06-23
SHEET 14 OF 24
DATE APRIL 1980 REV. 1

211-13

211-016

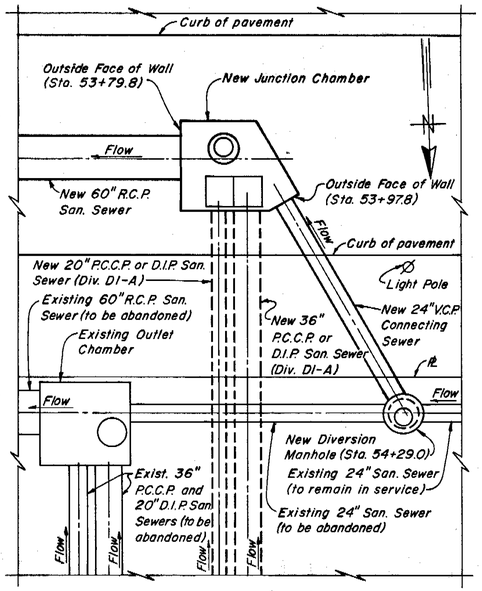


SITE PLAN
SCALE: 1"=10'

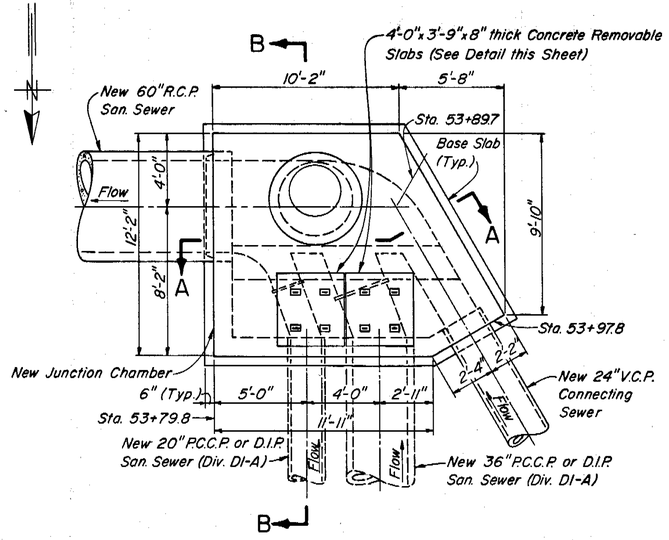


PLAN
SCALE: 1/4"=1'-0"

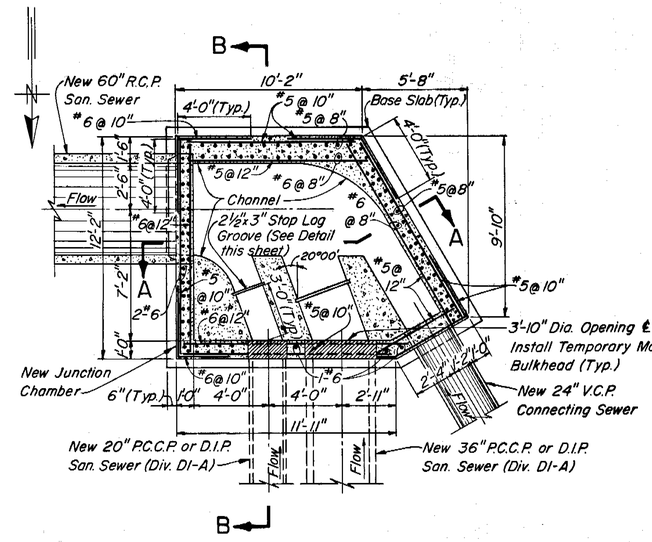


SECTIONAL PLAN C-C
SCALE: 1/4"=1'-0"

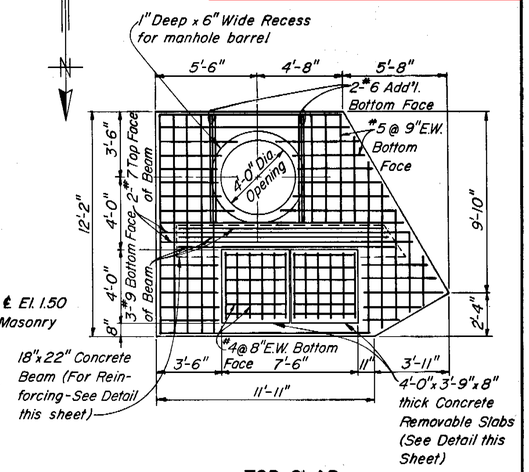


TOP SLAB
SCALE: 1/4"=1'-0"

NOTE:
All interior surfaces of the Junction Chamber, except the channel dividers and benches, shall be lined with plastic sheet in accordance with the Specifications from 6" below the channel bottom to the top of the manhole top slab.

AS BUILT

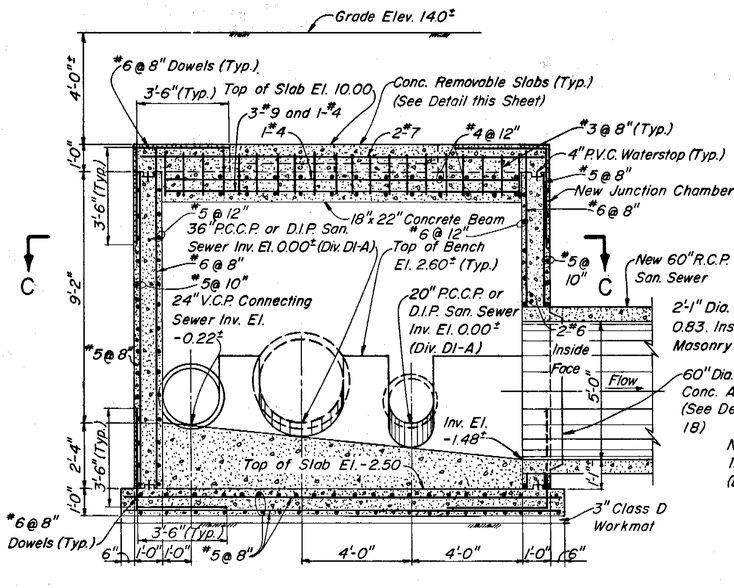


SECTION A-A
SCALE: 3/8"=1'-0"

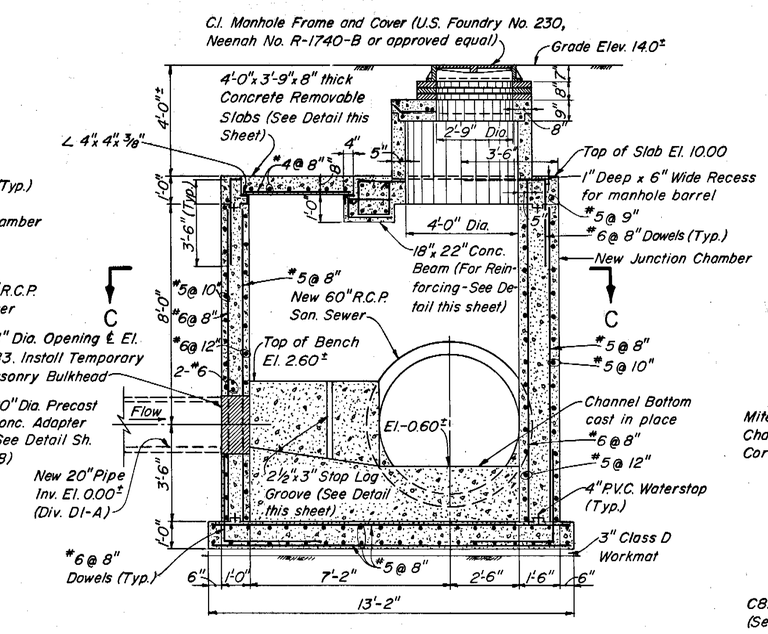


SECTION B-B
SCALE: 3/8"=1'-0"

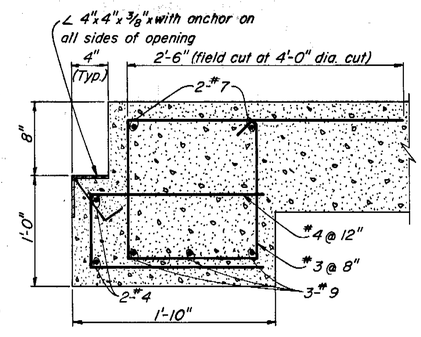


CONCRETE BEAM REINFORCING DETAIL
NOT TO SCALE

NOTE:
Coat exposed surfaces with 2 coats of Koopers Bitumastic 300 M, 10 mils dry thickness per coat applied in strict accordance with the manufacturer's recommendations.

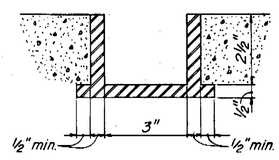


CAST IRON STOP LOG GROOVE DETAIL
NOT TO SCALE

NOTE:
Coat channel with 2 coats Koppers 300 M, Tnemic Tneme-Tar, or approved equal, 10 mils each coat.

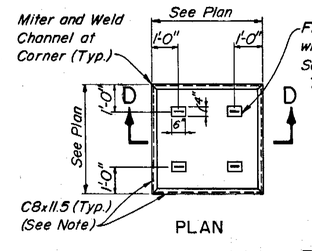


PLAN

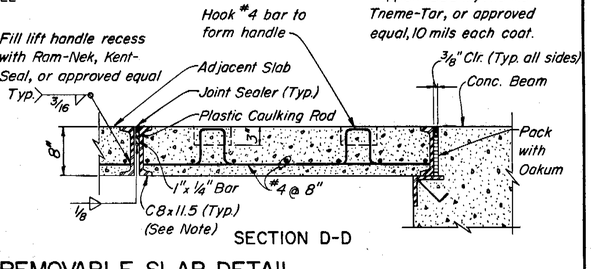


SECTION D-D

REMOVABLE SLAB DETAIL
NOT TO SCALE

| | | | | | |
|---|---|---|---|---|---|
| GREELEY AND HANSEN ENGINEERS, 1211 NORTH WEST SHORE BLVD. TAMPA, FLORIDA 33607 | DESIGNED RSH, JFS | APPROVED _____ DATE _____ DIR., DEPT. OF SANITARY SEWERS | | | |
| | DRAWN AA | _____ DATE _____ GREELEY AND HANSEN, ENGINEERS | | | |
| | CHECKED TLW | | 1 | 8/28/81 | TLW | Added Note |
| | | | NO. | DATE | APP. | REVISION |

SCALE: 10 0 10 20 FT. 1" = 10'; 4 0 4 8 FT. 1/4" = 1'-0"; 1 0 1 2 3 4 5 6 7 FT. 3/8" = 1'-0"

CITY OF TAMPA, FLORIDA
SEWAGE DISPOSAL SYSTEM
WEST RIVER INTERCEPTING SEWER REPLACEMENT

DIVISION B2-A
JUNCTION CHAMBER AT STA. 53+89.7

PROJ. NO. 2023-400-06-23
SHEET 15 OF 24
DATE APRIL 1980 REV. 1

211-16

211-017

NOTE:
See Note 2, Sheet 4 regarding revised horizontal alignment of 30" R.C.P. replacement storm sewer.

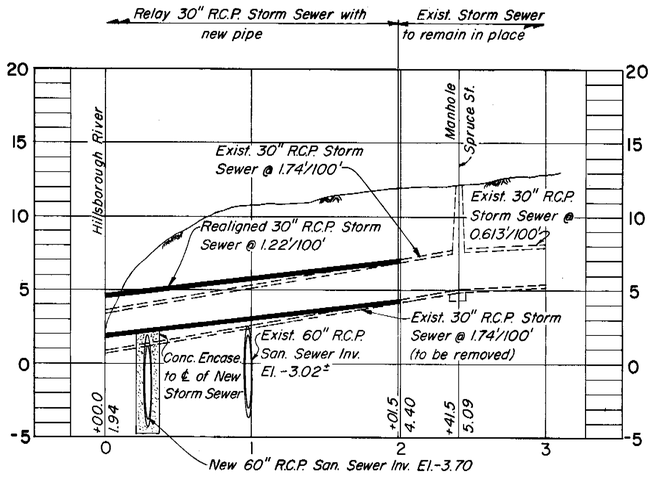


PROFILE

## REALIGNMENT OF 30" STORM SEWER AT NORTH BOULEVARD

SCALE: 1"=50'

NOTE:
1. Contractor shall remove existing 8" V.C.P. Sewer and construct new replacement sewer and manholes 10' northeast and parallel to new 60" R.C.P. as shown on Sheet 5.
2. Contractor shall connect all existing house laterals to replacement sewer. All house laterals shall be Type A.

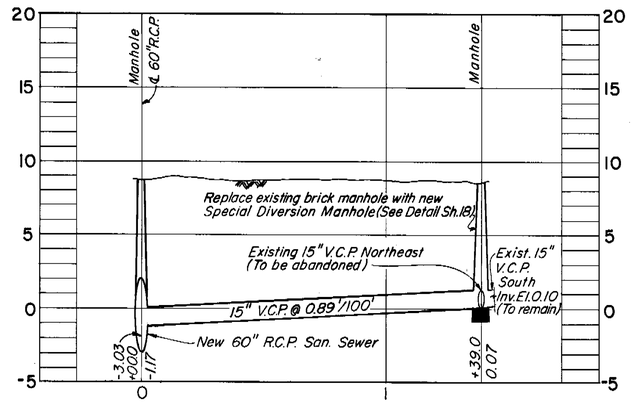


PROFILE

## CONNECTING SEWER AT STA. 15+07.6

SCALE: 1"=30'

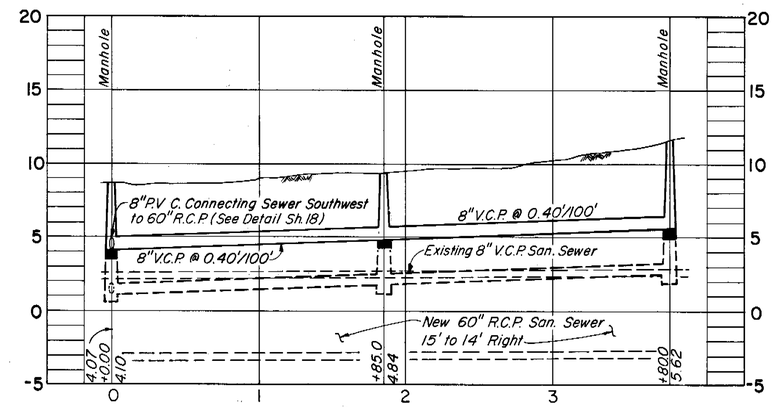


PROFILE

## 8" V.C.P. REPLACEMENT SEWER ON WILLOW AVENUE

SCALE: 1"=50'

AS BUILT

GENERAL NOTE:
All pipe bedding for sewers shown on this sheet shall be Class C (See Detail Sh.3)

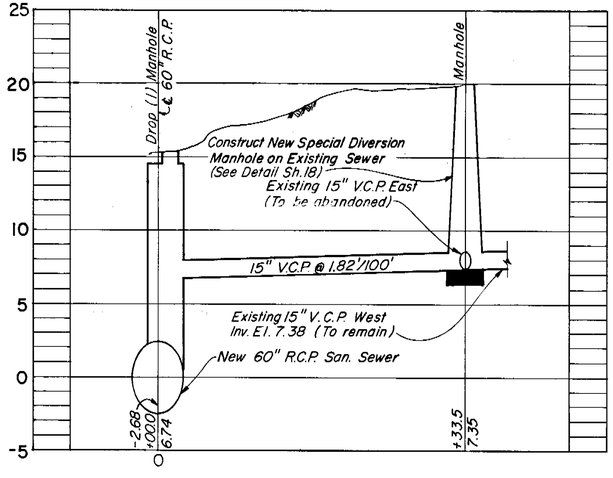


PROFILE

## CONNECTING SEWER AT STA. 23+83.6

SCALE: 1/8"=1'-0"

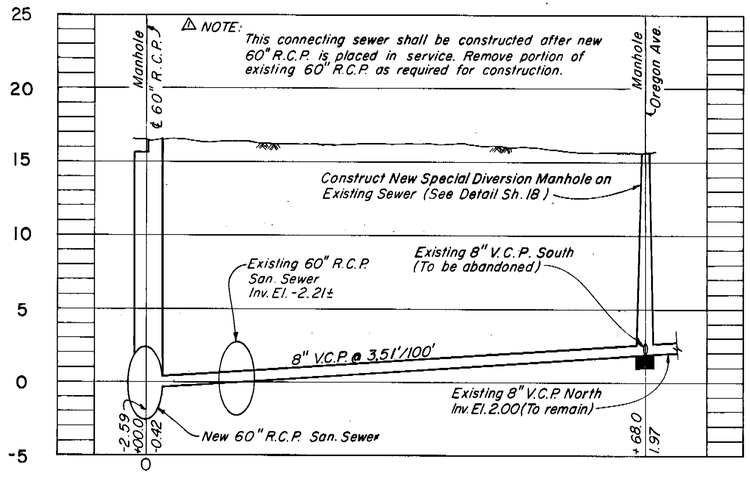


PROFILE

## CONNECTING SEWER AT STA. 25+92.1

SCALE: 1"=10'

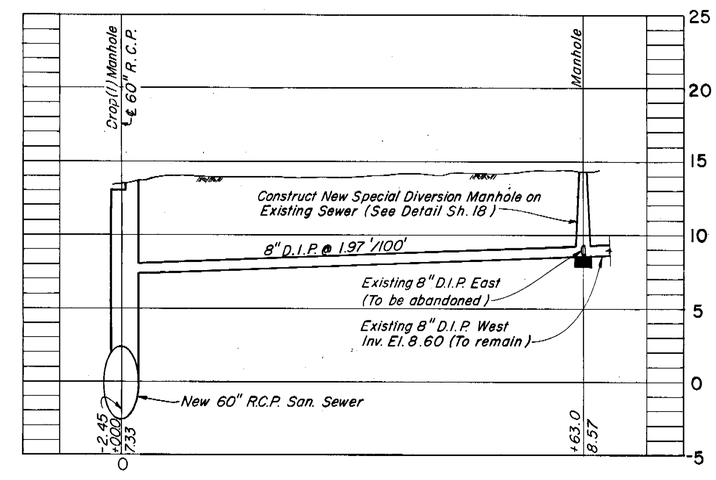


PROFILE

## CONNECTING SEWER AT STA. 29+55.1

SCALE: 1"=10'

| | | | | | | | |
|---|---|---|---|---|---|---|---|
| GREELEY AND HANSEN ENGINEERS 1211 NORTH WEST SHORE BLVD. TAMPA, FLORIDA 33607 | DESIGNED MDO<br>DRAWN FFL<br>CHECKED TLW | APPROVED<br>DATE<br>SUPT., DEPT. OF SANITARY SEWERS<br>DATE<br>GREELEY AND HANSEN, ENGINEERS | NO. | DATE | APP. | REVISION | SCALE: VERT. 1"=5' HORIZ. 1"=30' HORIZ. 1/8"=1'-0" |
| | | | 1 | 8/27/81 | T.L.W. | Added Notes Conn. Sewer Sta. 26+05 | |

CITY OF TAMPA, FLORIDA
SEWAGE DISPOSAL SYSTEM
WEST RIVER INTERCEPTING SEWER REPLACEMENT

DIVISION B2-A
CONNECTING AND REPLACEMENT SEWERS

PROJ. NO. 2023-400-06-23
SHEET 16 OF 24
DATE APR. 1980 REV. 1

211-17

211-018

**CONSTRUCTION STEP 1**

Prior to commencing construction on crossover structures, complete construction and testing of all 60" R.C.P., manholes, connecting and replacement sewers, conflict structures, and junction chamber at Sta. 53+89.7 in Division B2-A.

**CONSTRUCTION STEP 2**

Construct base slab of each crossover structure (maintain existing 60" R.C.P. intact).

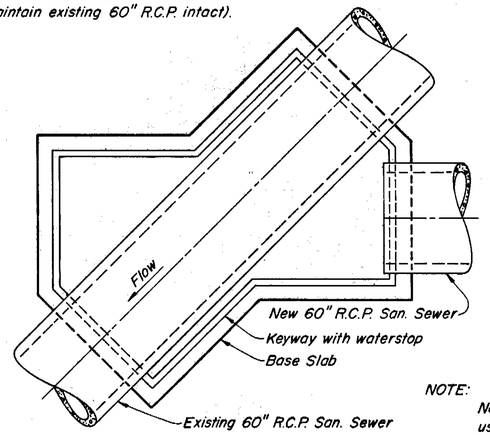


PLAN
(CONSTRUCTION STEP 2)

**CONSTRUCTION STEP 3**

1. Construct walls to full height.
2. Construct as much of new channel as possible (maintain existing 60" R.C.P. intact).
3. Install concrete plug in North Blvd. Crossover Structure (to be removed by others under Division B1-B).

NOTE: North Blvd. Structure used for illustrative purposes for Construction Steps 2 through 5.

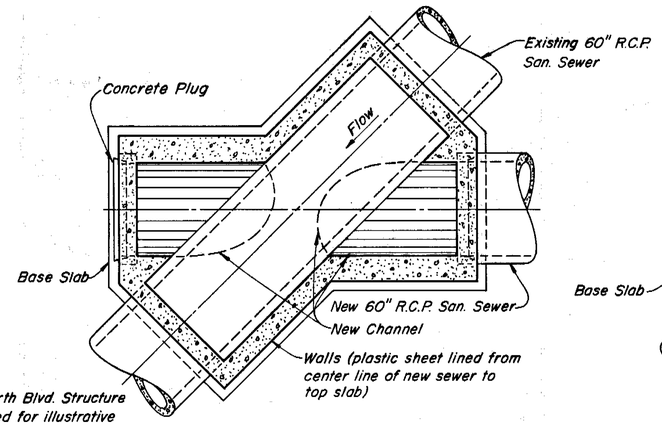


PLAN
(CONSTRUCTION STEP 3)

**CONSTRUCTION STEP 4**

1. Break out top half of existing 60" R.C.P. within limits of structure during low flow.
2. Install temporary 36"± diameter steel pipe with rubber tire "gasket" as shown to contain and convey flow through structure.

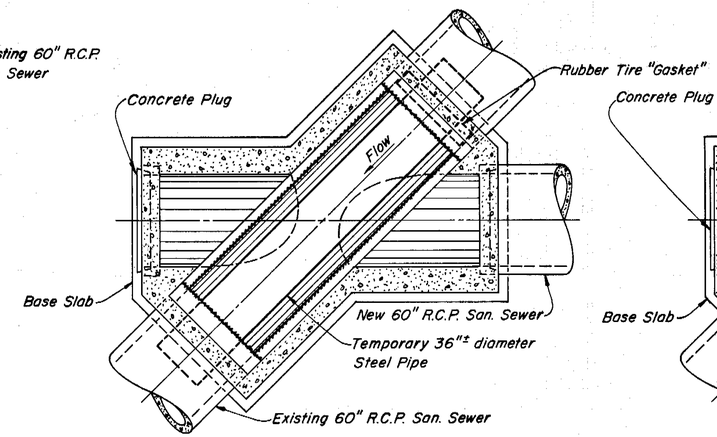


PLAN
(CONSTRUCTION STEP 4)

**CONSTRUCTION STEP 5**

1. Break out bottom ho[illegible] of structure.
2. Complete new channel.

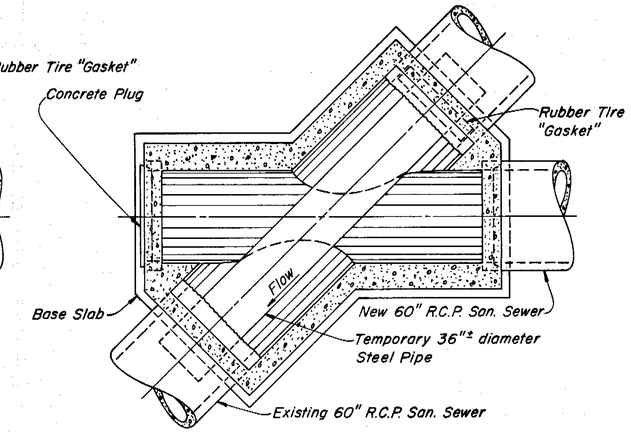


PLAN
(CONSTRUCTION STEP 5)

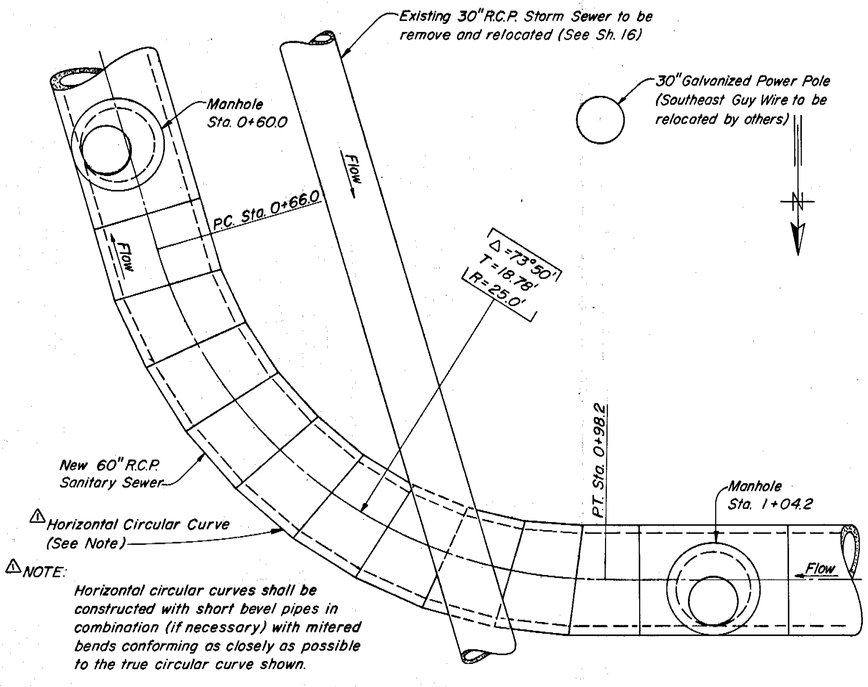


NOTE:
Horizontal circular curves shall be constructed with short bevel pipes in combination (if necessary) with mitered bends conforming as closely as possible to the true circular curve shown.

DETAIL AT STA. 0+90±

**CONSTRUCTION STEP 6**

1. Remove temporary 36"± diameter steel pipe and "gasket".
2. Divert flow into new 60" R.C.P. at junction chamber in Division D1-A and at all connecting sewers, diversion manholes, special manholes and new house laterals. (Both the old and new 60" R.C.P. sewers will be flooded).

**CONSTRUCTION STEP 7 (OREGON AVE. STRUCTURE ONLY)**

1. Install temporary, U-shaped, braced, 6'-6" high, steel trough, carefully contoured to fit in new channel to contain and convey flow through structure in new 60" R.C.P., and to act as a concrete form. Provide adequate temporary anchoring to prevent uplift.
2. Fill Areas A and B with Class D concrete to top of walls of structure by tremie method.
3. Remove trough after concrete is cured and construct top slab and manhole barrel.

**CONSTRUCTION STEP 8 (NORTH BLVD. STRUCTURE ONLY)**

1. Install trough as described in Step 7, except trough shall be deflected to disharge flow into downstream existing 60" R.C.P.
2. Fill only Area A with Class D concrete to top of walls of structure by tremie method.
3. Remove trough after concrete is cured and construct top slab and manhole barrel.

AS BUILT

GENERAL NOTE:
Alternate methods and sequences of construction may be considered by the Engineer, but such consideration, if any, does not obligate approval by the Engineer.

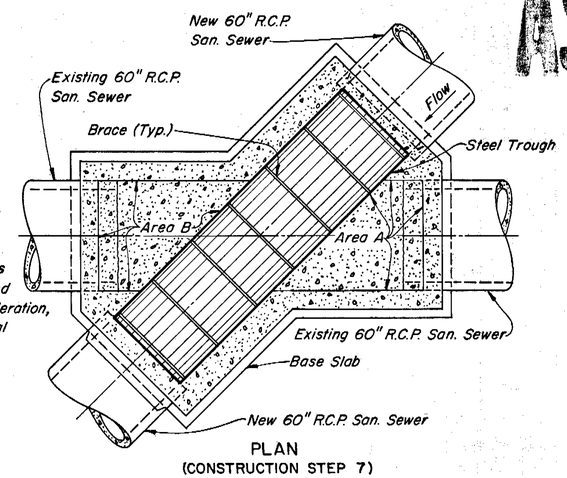


PLAN
(CONSTRUCTION STEP 7)

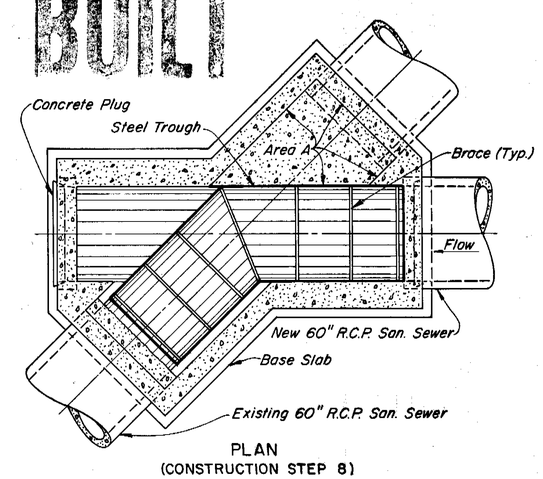


PLAN
(CONSTRUCTION STEP 8)

SEQUENCE OF CONSTRUCTION FOR CROSSOVER STRUCTURES AT NORTH BLVD. AND OREGON AVE.

SCALE: 1/4"=1'-0"

| | | | | | | |
|---|---|---|---|---|---|---|
| GREELEY AND HANSEN ENGINEERS, 1211 NORTH WEST SHORE BLVD. TAMPA, FLORIDA 33607 | DESIGNED RSH, MDO | APPROVED ____ DATE ____ DIR., DEPT. OF SANITARY SEWERS | | | | |
| | DRAWN AA | | | | | |
| | CHECKED TLW | ____ DATE ____ GREELEY AND HANSEN, ENGINEERS | 1 | 8/31/81 | TLW | Added Note in Detail Sta. 0+90 |
| | | | NO. | DATE | APP. | REVISION |

SCALE: 4 0 4 8 FT. 1/4"=1'-0"

CITY OF TAMPA, FLORIDA
SEWAGE DISPOSAL SYSTEM
WEST RIVER INTERCEPTING SEWER REPLACEMENT

DIVISION B2-A
MISCELLANEOUS DETAILS

PROJ. NO. 2023-400-06-23
SHEET 17 OF 24
DATE APRIL 1980 REV. 1

211-18

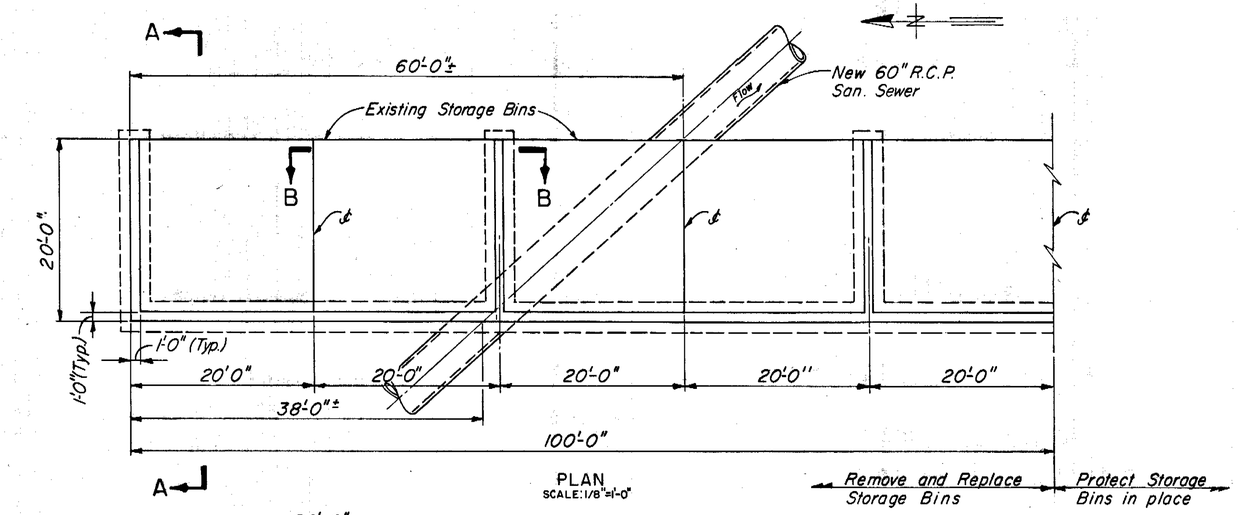


PLAN
SCALE: 1/8"=1'-0"

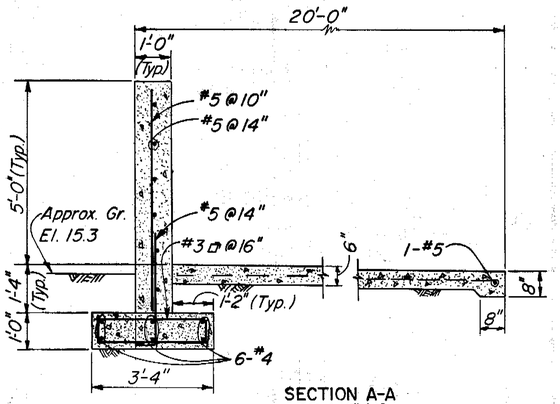


SECTION A-A
SCALE: 1/2"=1'-0"

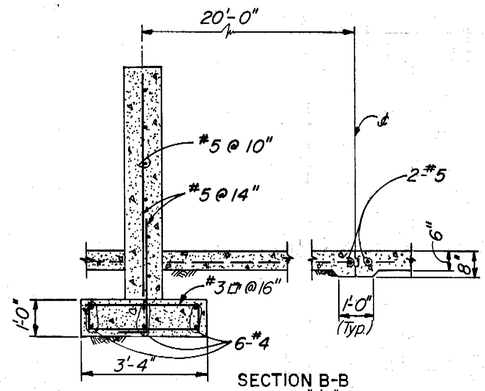


SECTION B-B
SCALE: 1/2"=1'-0"

## MAINTENANCE YARD STORAGE BIN REMOVAL AND REPLACEMENT DETAILS

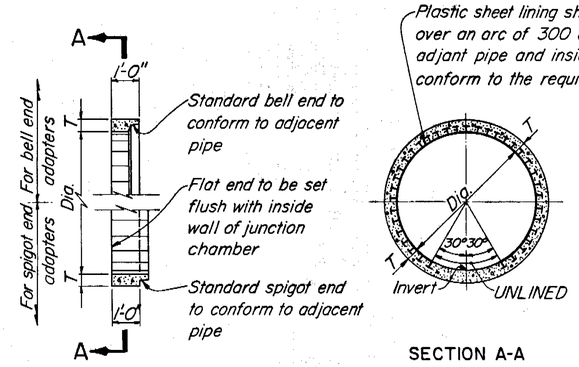


SECTION A-A

NOTES:
1. Precast concrete shall conform to A.S.T.M. Des. C76, Class IV.
2. Adapter wall thickness "T" shall be the same as the adjacent reinforced concrete pipe sewer wall thickness.

## PRECAST CONCRETE ADAPTER DETAIL

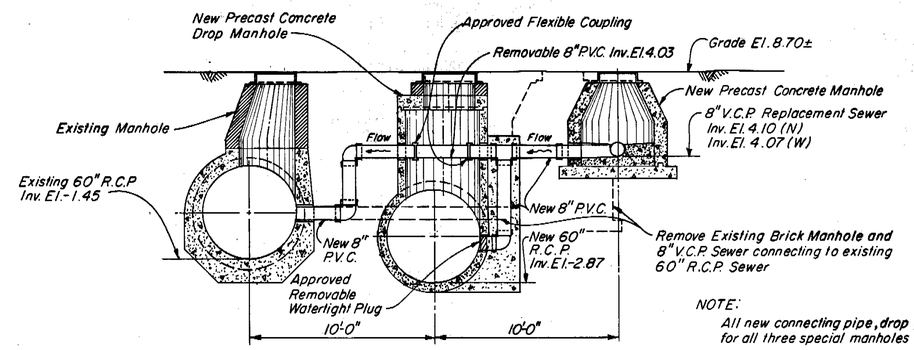


NOTE:
All new connecting pipe, drop pipe and fittings for all three special manholes shall be P.V.C.

SPECIAL MANHOLE AT STA. 19+13.9
(LOOKING UPSTREAM)

NOTE:
When New Intercepting Sewer is placed in service, the Contractor shall remove watertight plug, divert flow into new connecting sewer, plug downstream existing sewer and fill abandoned portion of channel with Class D concrete as directed by the Engineer.

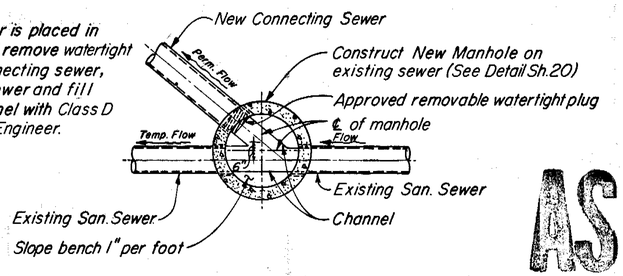


TYPICAL SECTIONAL PLAN

## DETAIL OF SPECIAL DIVERSION MANHOLE ON CONNECTING SEWERS
SCALE: 1/4"=1'-0"

AS BUILT

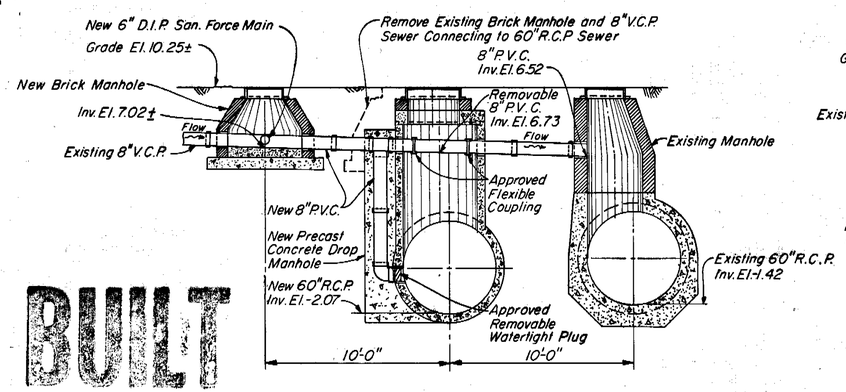


SPECIAL MANHOLE AT STA. 38+83.3
(LOOKING UPSTREAM)

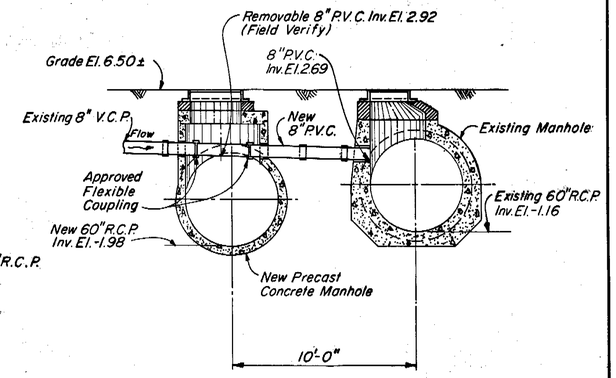


SPECIAL MANHOLE AT STA. 41+01.1
(LOOKING UPSTREAM)

## SPECIAL MANHOLE MODIFICATIONS
SCALE: 1/4"=1'-0"

| | | | | | | | |
|---|---|---|---|---|---|---|---|
| GREELEY AND HANSEN ENGINEERS<br>1211 NORTH WEST SHORE BLVD.<br>TAMPA, FLORIDA 33607 | DESIGNED RSH, MDO<br>DRAWN WRB, FFL<br>CHECKED TLW | APPROVED<br>DATE<br>SUPT., DEPT. OF SANITARY SEWERS<br>DATE<br>GREELEY AND HANSEN, ENGINEERS | NO. DATE APP. REVISION | SCALE<br>4 0 4 8 FT 1/4"=1'-0"<br>1 0 2 3 4 5 FT 1/2"=1'-0"<br>8 0 8 16 FT 1/8"=1'-0" | CITY OF TAMPA, FLORIDA<br>SEWAGE DISPOSAL SYSTEM<br>WEST RIVER INTERCEPTING SEWER REPLACEMENT | DIVISION B2-A<br>MISCELLANEOUS DETAILS | PROJ. NO. 2023-400-06-23<br>SHEET 18 OF 24<br>DATE APRIL 1980 REV. 0 |

211-19

211-020

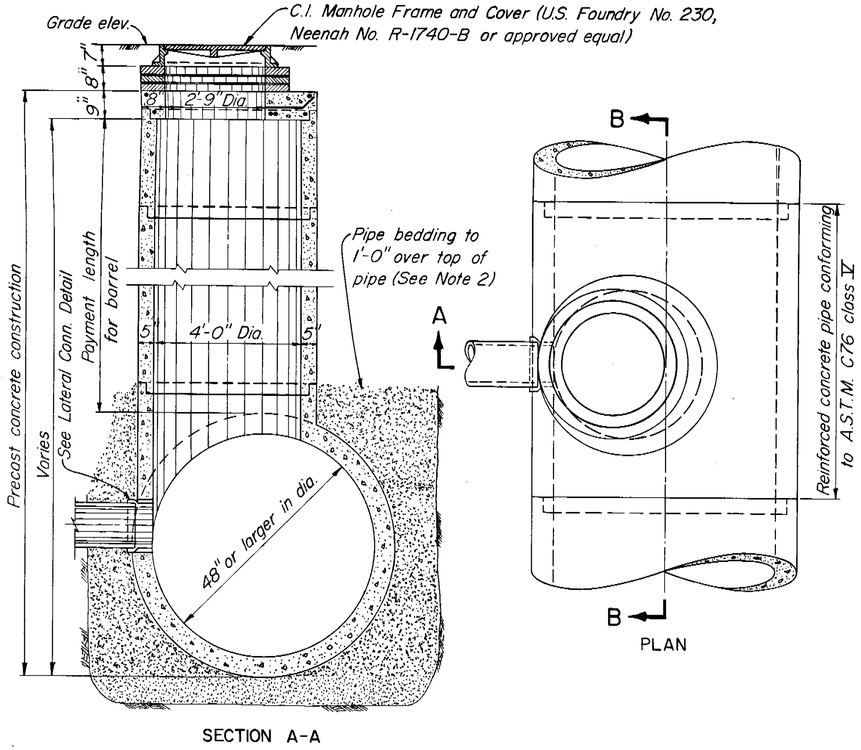


SECTION A-A

PLAN

## STANDARD MANHOLE-DEEP TYPE

FOR SEWERS 48" OR LARGER IN DIAMETER

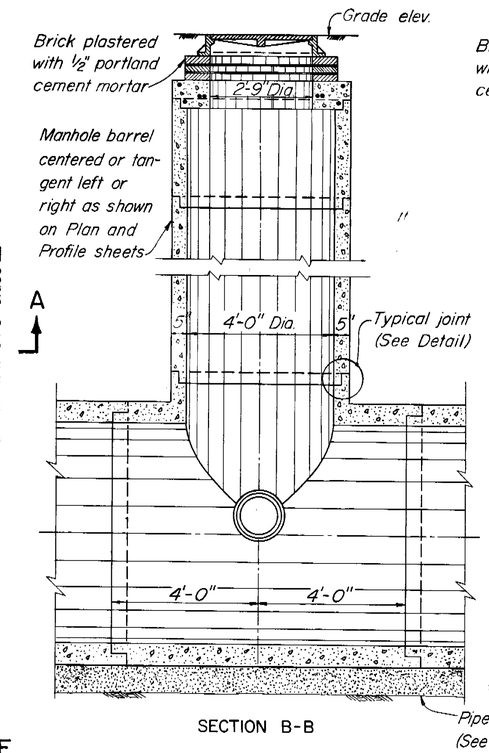


SECTION B-B

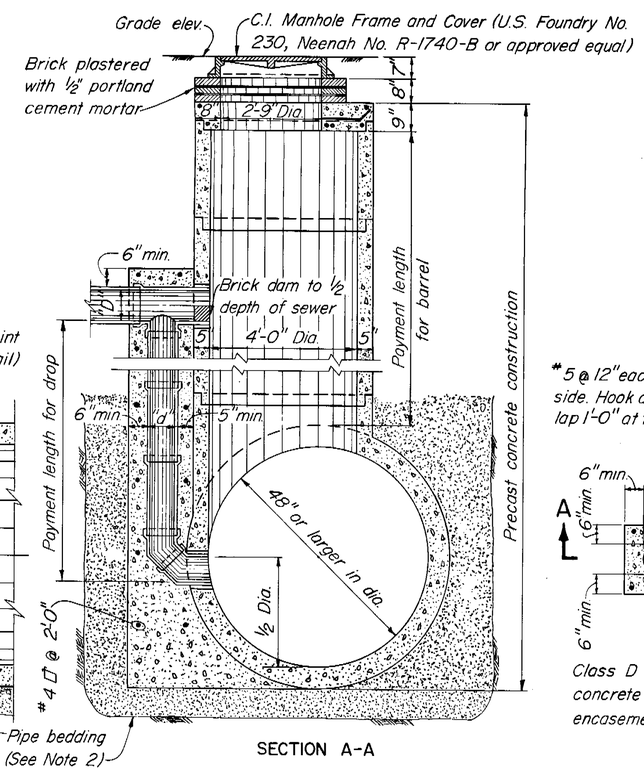


SECTION A-A

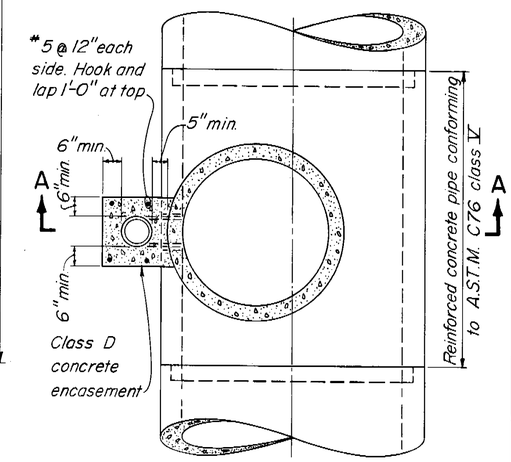


SECTIONAL PLAN

| SCHEDULE FOR DROP MANHOLE | |
|---|---|
| INLET PIPE DIAMETER "D" | DROP PIPE DIAMETER "d" |
| 8" | 8" |
| 10" | 8" |
| 12" | 10" |
| 15" | 12" |
| 18" | 15" |
| 21" | 18" |
| 24" | 18" |

## STANDARD DROP MANHOLE

FOR SEWERS 48" OR LARGER IN DIAMETER

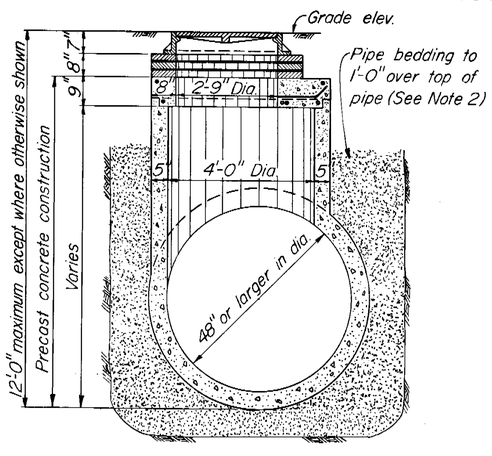


SECTION A-A

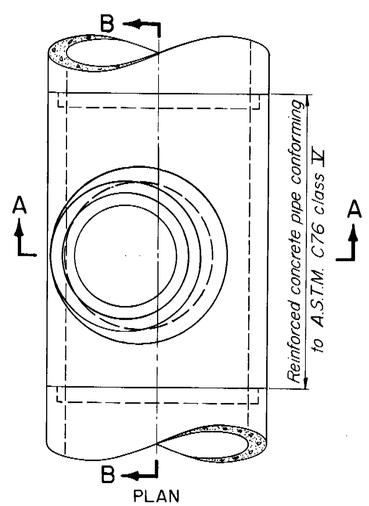


PLAN

## STANDARD MANHOLE-SHALLOW TYPE

FOR SEWERS 48" OR LARGER IN DIAMETER

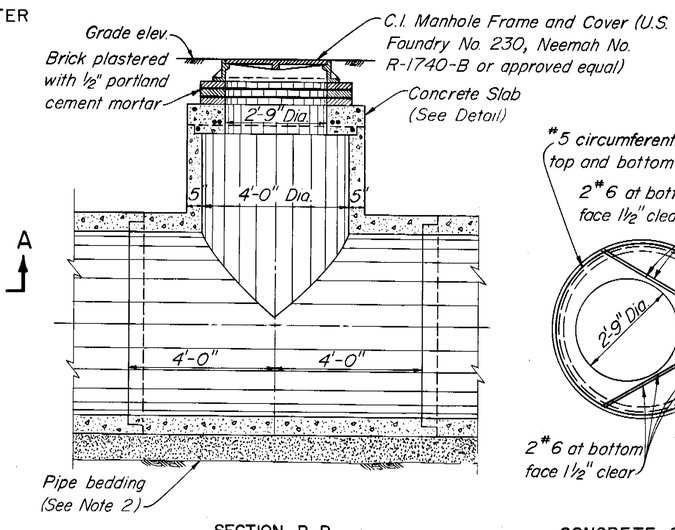


SECTION B-B

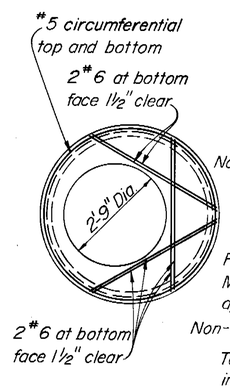


CONCRETE SLAB DETAIL

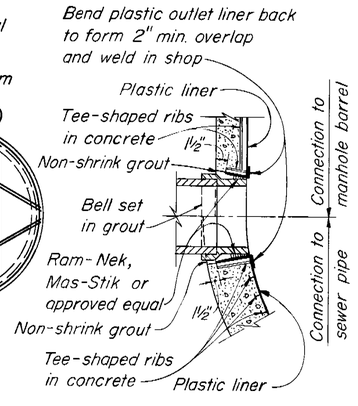


## LATERAL CONNECTION DETAIL

NOT TO SCALE

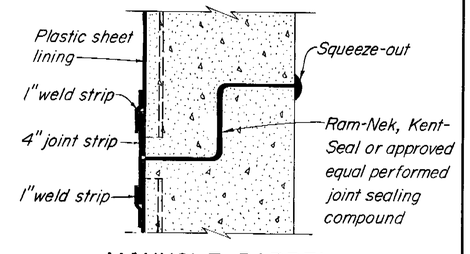


## MANHOLE BARREL JOINT DETAIL

NOT TO SCALE

NOTES:

1. All pipe stubs from manholes for future connections or connections to other Contract Divisions shall be provided with water tight plugs placed from within the manhole.
2. See Specifications for materials requirements and placement and compaction of pipe bedding and limestone screenings.

AS BUILT

| | | | |
|---|---|---|---|
| GREELEY AND HANSEN ENGINEERS 1211 NORTH WEST SHORE BLVD. TAMPA, FLORIDA 33607 | DESIGNED T.L.W. DRAWN A.A. CHECKED T.L.W. | APPROVED ____ DATE ____ DIR., DEPT. OF SANITARY SEWERS ____ DATE ____ GREELEY AND HANSEN, ENGINEERS | NO. DATE APP. REVISION |
| SCALE 1 0 1 2 3 4 5 FT 1/2" = 1'-0" | CITY OF TAMPA, FLORIDA SEWAGE DISPOSAL SYSTEM WEST RIVER INTERCEPTING SEWER REPLACEMENT | DIVISION B2-A STANDARD MANHOLE DETAILS FOR SEWERS 48" OR LARGER IN DIAMETER | PROJ. NO 2023-400-06-23 SHEET 19 OF 24 DATE APRIL 1980 REV. 0 |

211-20

211-021

| SCHEDULE FOR DROP MANHOLE | |
|---|---|
| INLET PIPE DIAMETER "D" | DROP PIPE DIAMETER "d" |
| 8" | 8" |
| 10" | 8" |
| 12" | 10" |
| 15" | 12" |
| 18" | 15" |
| 21" | 18" |
| 24" | 18" |

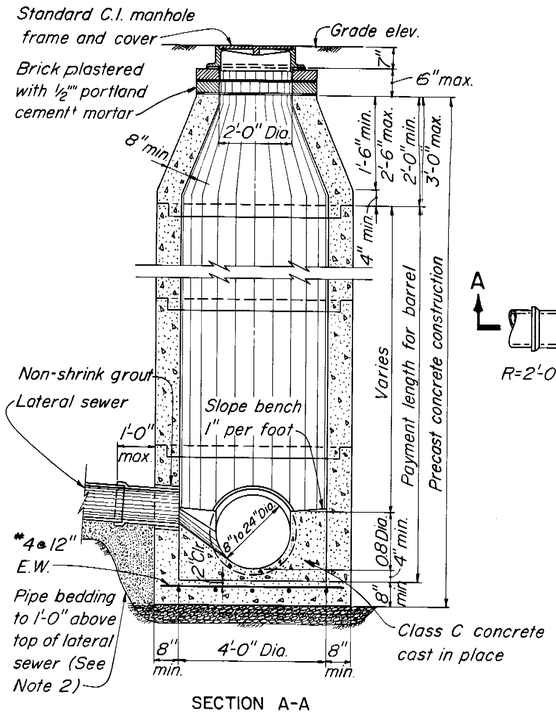


SECTION A-A

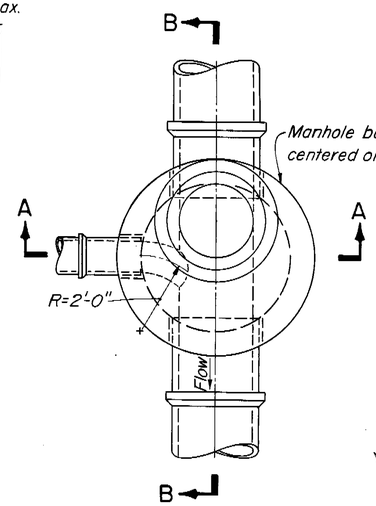


PLAN

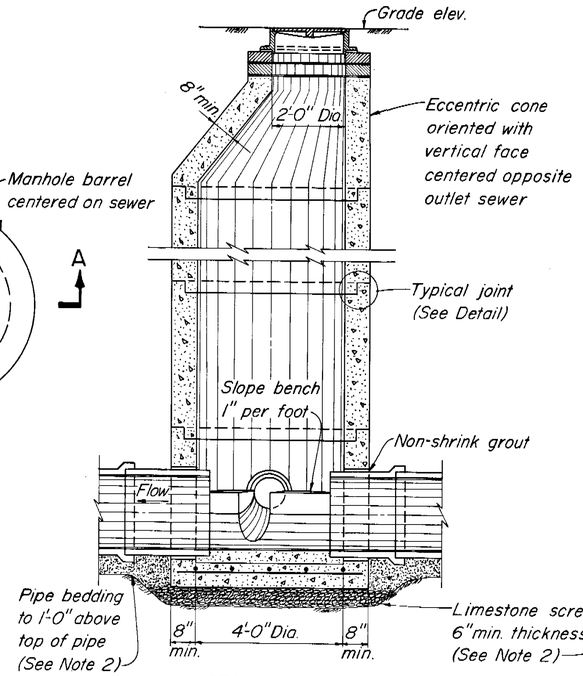


SECTION B-B

STANDARD MANHOLE-DEEP TYPE
FOR SEWERS 24" OR LESS IN DIAMETER

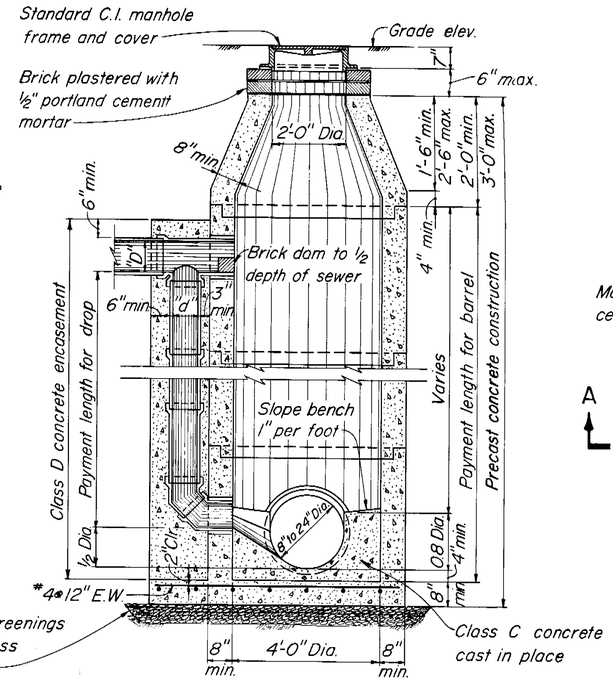


SECTION A-A

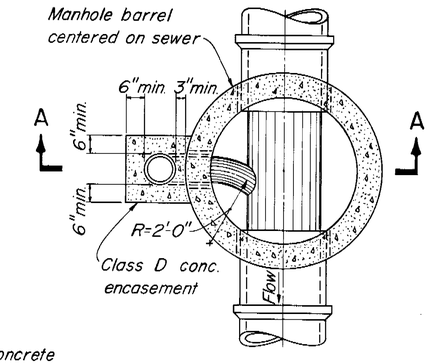


SECTIONAL PLAN

STANDARD DROP MANHOLE
FOR SEWERS 24" OR LESS IN DIAMETER

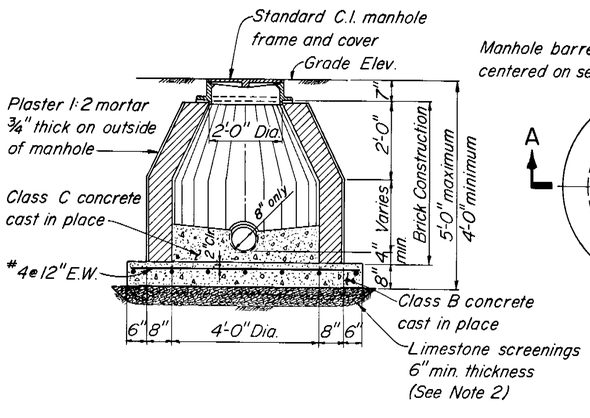


SECTION A-A

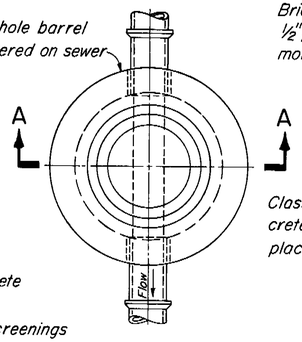


PLAN

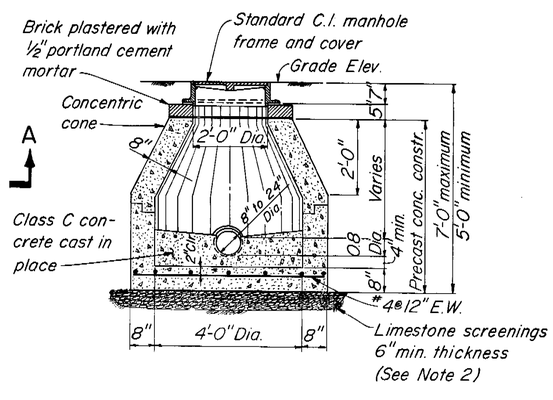


SECTION A-A

STANDARD MANHOLE-SHALLOW TYPE
FOR SEWERS 24" OR LESS IN DIAMETER

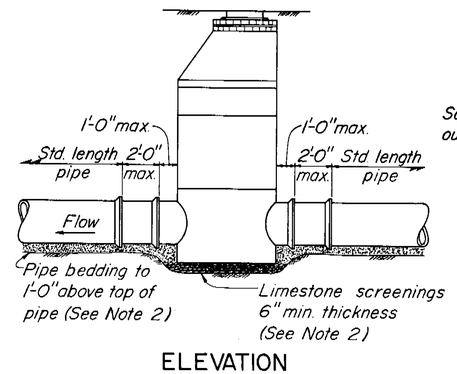


ELEVATION
FOR SEWERS 24" OR LESS IN DIAMETER
NOT TO SCALE

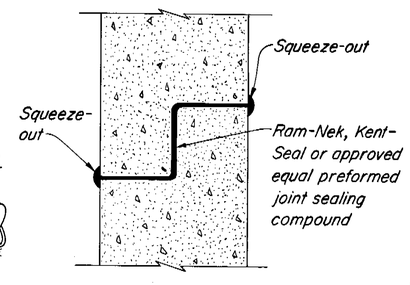


MANHOLE BARREL JOINT DETAIL
NOT TO SCALE

AS BUILT

NOTES:

1. All pipe stubs from manholes for future connections or connections to other Contract Divisions shall be provided with water tight plugs placed from within the manhole.
2. See Specifications for materials requirements and placement and compaction of pipe bedding and limestone screenings.

| | | | | | | | |
|---|---|---|---|---|---|---|---|
| GREELEY AND HANSEN ENGINEERS, 1211 NORTH WEST SHORE BLVD., TAMPA, FLORIDA 33607 | DESIGNED TLW<br>DRAWN AA<br>CHECKED TLW | APPROVED<br>SUPT., DEPT. OF SANITARY SEWERS — DATE<br>GREELEY AND HANSEN, ENGINEERS — DATE | NO. | DATE | APP. | REVISION | SCALE 1/2"=1'-0" |

CITY OF TAMPA, FLORIDA
SEWAGE DISPOSAL SYSTEM
WEST RIVER INTERCEPTING SEWER REPLACEMENT

DIVISION B2-A
STANDARD MANHOLE DETAILS
FOR SEWERS 24" OR LESS IN DIAMETER

PROJ. NO. 2023-400-06-23
SHEET 20 OF 24
DATE APRIL 1980 REV. 0

211-21

211-024

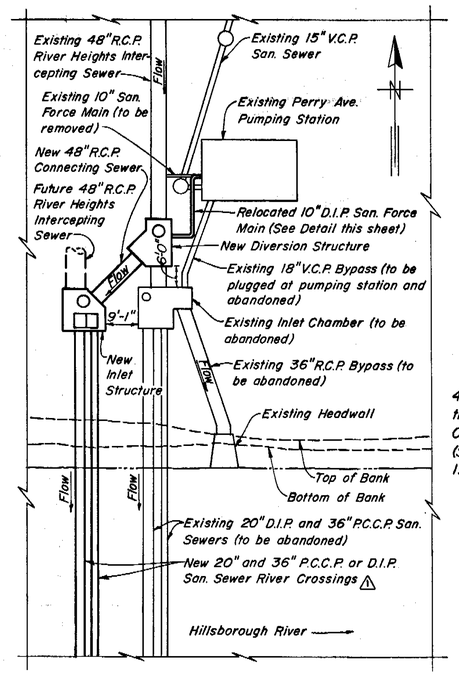


SITE PLAN
SCALE: 1"=20'

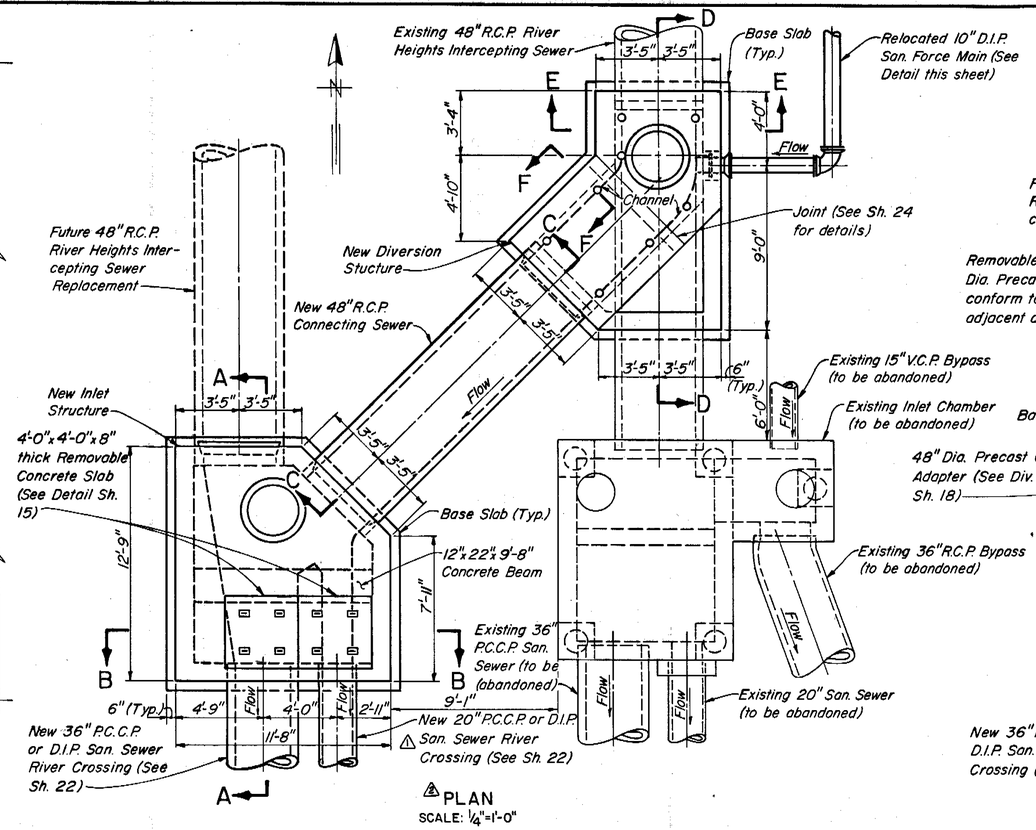


PLAN
SCALE: 1/4"=1'-0"

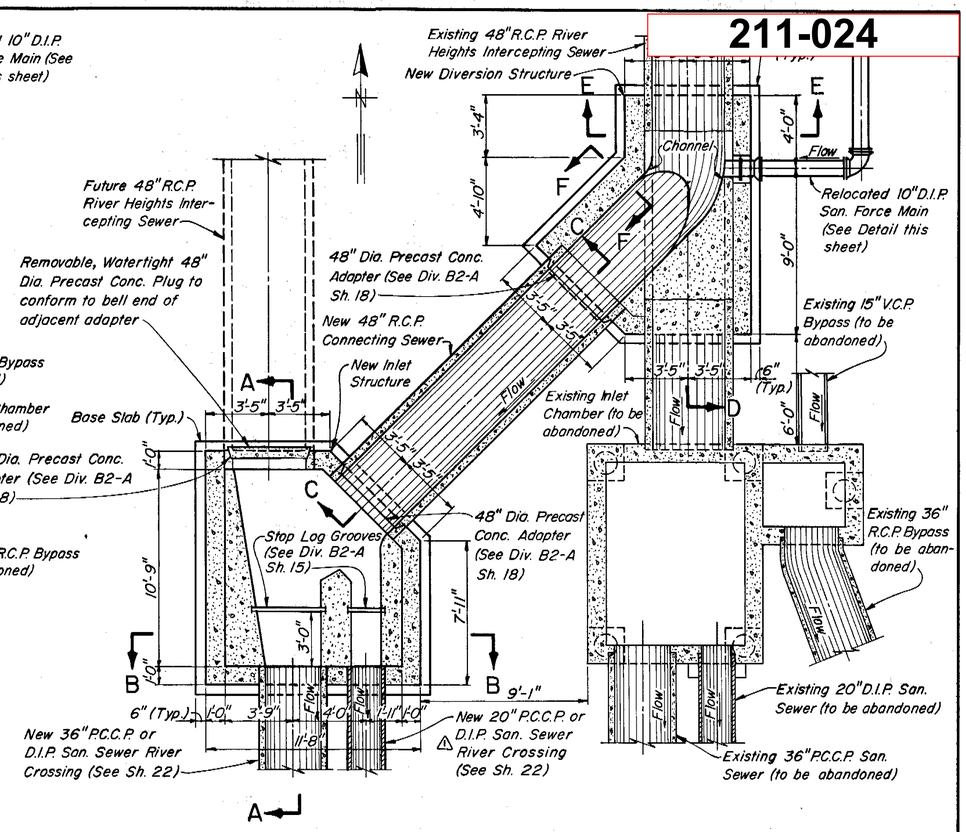


SECTIONAL PLAN
SCALE: 1/4"=1'-0"

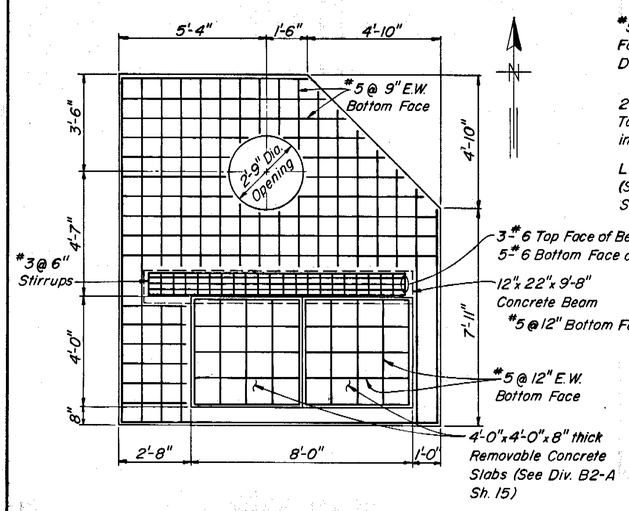


INLET STRUCTURE TOP SLAB
SCALE: 3/8"=1'-0"

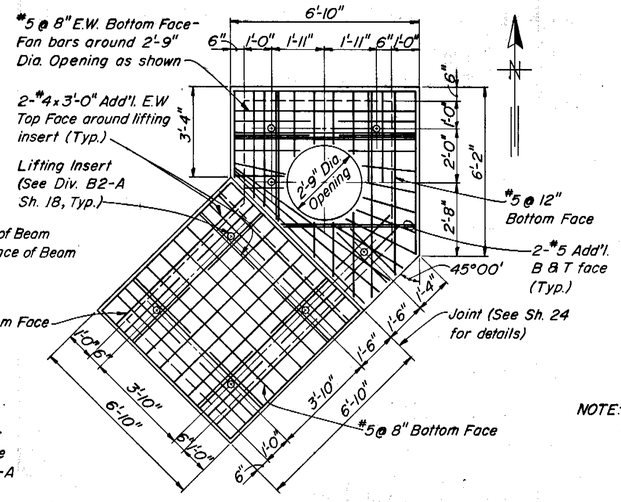


DIVERSION STRUCTURE PRECAST TOP SLABS
SCALE: 3/8"=1'-0"

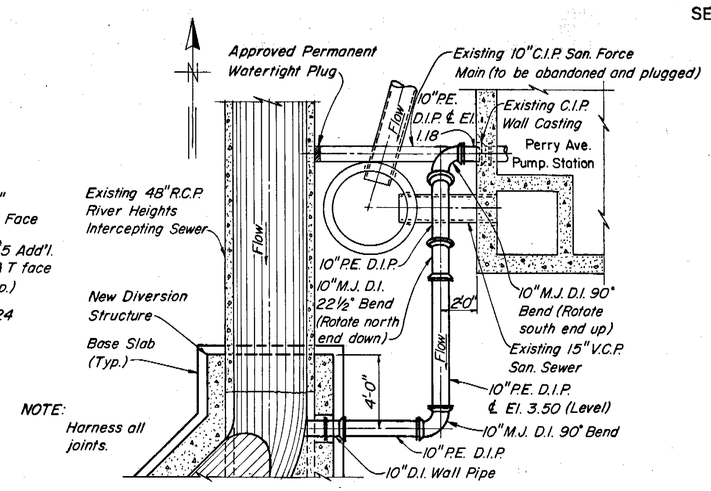


NOTE:
Harness all joints.

RELOCATED 10" D.I.P. SAN. FORCE MAIN DETAIL
SCALE: 1/4"=1'-0"

NOTES:

1. All interior surfaces of the New Inlet Structure, except the channel divides and benches, shall be lined with plastic sheet in accordance with the Specifications from 6" below the channel bottom to the top of the manhole opening.
2. The New Diversion Structure shall not be lined with plastic sheet.
3. All ductile iron pipe and fittings shall be harnessed.

AS BUILT

| | | | | | | | | |
|---|---|---|---|---|---|---|---|---|
| GREELEY AND HANSEN ENGINEERS, 1211 NORTH WEST SHORE BLVD. TAMPA, FLORIDA 33607 | DESIGNED RSH, JFS<br>DRAWN AA<br>CHECKED TLW | APPROVED _____ DATE _____<br>DIR., DEPT. OF SANITARY SEWERS<br>_____ DATE _____<br>GREELEY AND HANSEN, ENGINEERS | NO. | DATE | APP. | REVISION | SCALE: 1" = 20'; 1/4" = 1'-0"; 3/8" = 1'-0" | CITY OF TAMPA, FLORIDA<br>SEWAGE DISPOSAL SYSTEM<br>PERRY AVENUE RIVER CROSSING REPLACEMENT | DIVISION DI-A<br>INLET STRUCTURE AND DIVERSION STRUCTURE | PROJ. NO. 2023-400-06-23<br>SHEET 23 OF 24<br>DATE APRIL 1980 REV. 3 |
| | | | 3 | 8/28/81 | TLW | Rev. D.S. Top Slab Reinforcing | | | | |
| | | | 2 | 8/28/81 | TLW | Rev. D.S. Top Slab to Precast | | | | |
| | | | 1 | 8/28/81 | TLW | Rev. Notes Re: 20" Pipe Mat'l. | | | | |

211-24

211-025

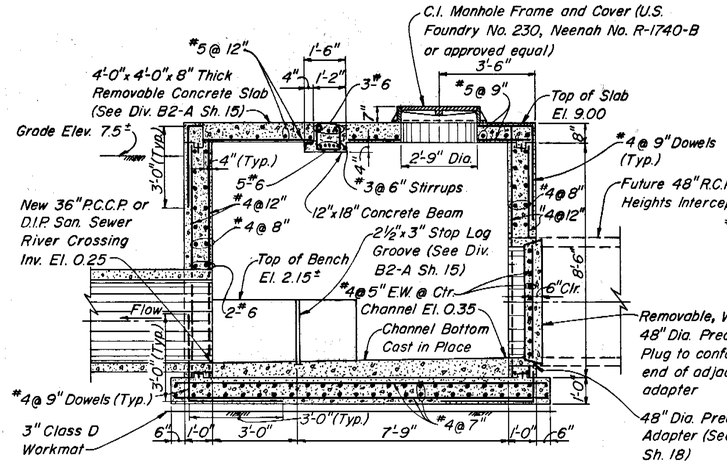


SECTION A-A
SCALE: 3/8"=1'-0"

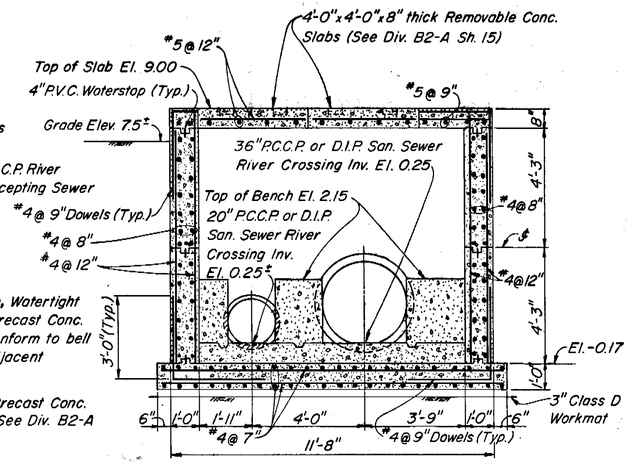


SECTION B-B
SCALE: 3/8"=1'-0"

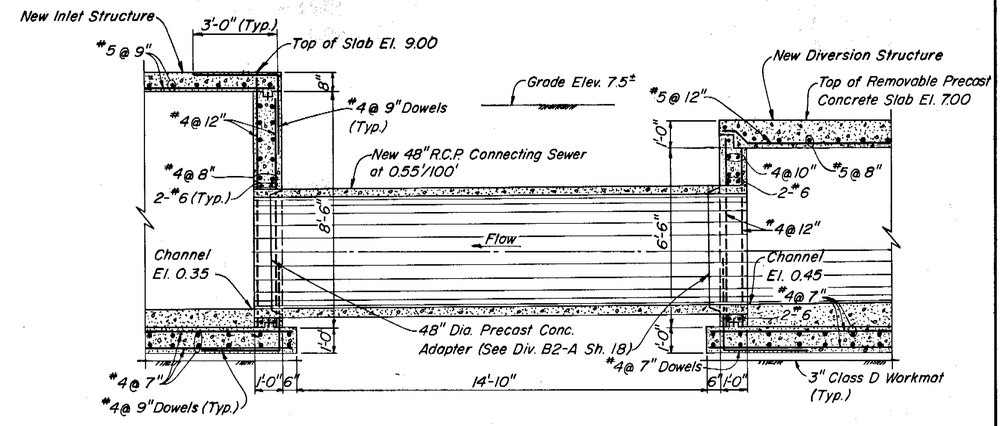


SECTION C-C
SCALE: 3/8"=1'-0"

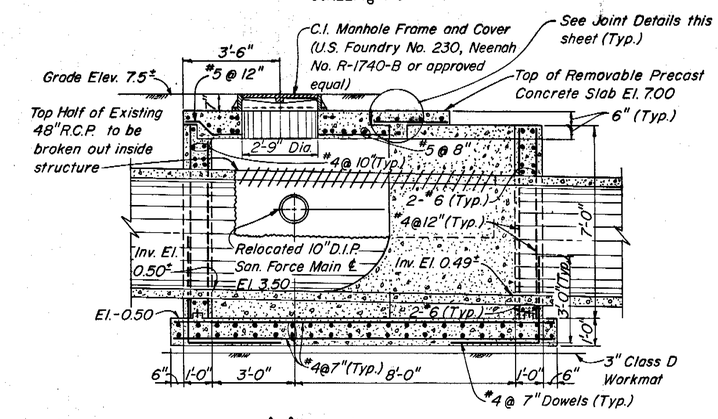


SECTION D-D
SCALE: 3/8"=1'-0"

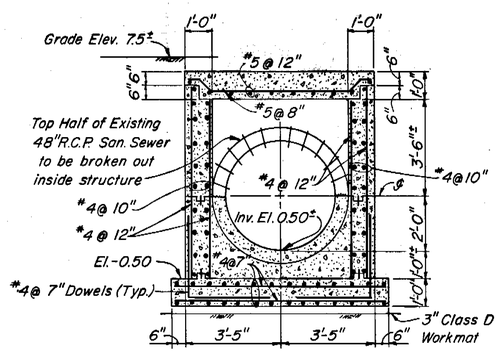


SECTION E-E
SCALE: 3/8"=1'-0"

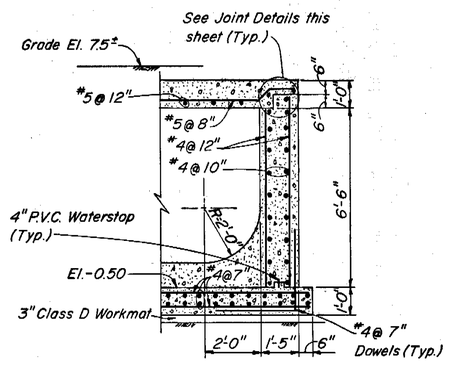


SECTION F-F
SCALE: 3/8"=1'-0"

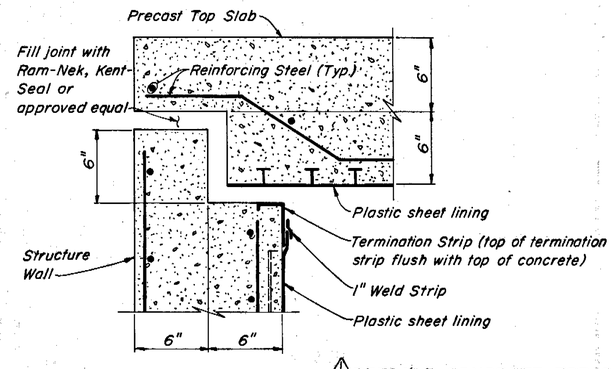


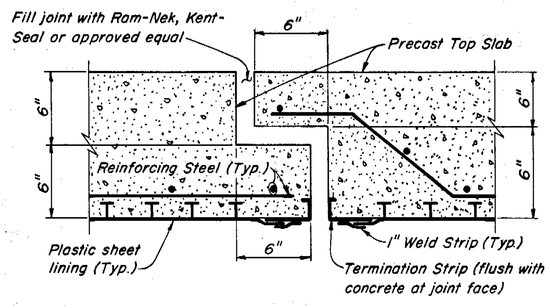


PRECAST CONCRETE TOP SLAB JOINT DETAILS
NOT TO SCALE

NOTES:

1. Joint surfaces to be coated with 2 coats of Koppers Bitumastic 300 M, 16 mils dry thickness per coat applied in strict accordance with the manufacturer's recommendations.
2. Proper care shall be taken to construct joints exactly to dimensions shown to ensure that all joint surfaces bear uniformily against adjacent joint surfaces.

AS BUILT

| | | | | | | | |
|---|---|---|---|---|---|---|---|
| GREELEY AND HANSEN ENGINEERS 1211 NORTH WEST SHORE BLVD. TAMPA, FLORIDA 33607 | DESIGNED RSH, JFS<br>DRAWN AA<br>CHECKED TLW | APPROVED<br>DIR., DEPT. OF SANITARY SEWERS DATE<br>GREELEY AND HANSEN, ENGINEERS DATE | 3 8/28/81 TLW Rev. D.S. Top Slab & Wall Reinf.<br>2 8/28/81 TLW Rev. D.S. Top Slab to Precast<br>1 8/27/81 TLW Add Precast Conc. Top Slab Details<br>NO. DATE APP. REVISION | SCALE 0 1 2 3 4 5 6 7 FT 3/8"=1'-0" | CITY OF TAMPA, FLORIDA<br>SEWAGE DISPOSAL SYSTEM<br>PERRY AVENUE RIVER CROSSING REPLACEMENT | DIVISION D1-A<br>INLET STRUCTURE AND DIVERSION STRUCTURE | PROJ. NO. 2023-400-06-23<br>SHEET 24 OF 24<br>DATE APRIL 1980 REV. 3 |

211-25