The Enclosed Document Is Provided For Your Convenience.

Please Email ALL Questions:

MailTo:ContractAdministration@TampaGov.net

Please Let Us Know If You Plan To Bid

City of Tampa
Contract Administration Department
306 E. Jackson St. #280A4N
Tampa, FL 33602
(813)274-8456

CITY OF
TAMPA, FLORIDA

NOTICE TO BIDDERS, INSTRUCTIONS TO BIDDERS
PROPOSAL, BID BOND, FORM OF NOTICE OF AWARD,
AGREEMENT, PERFORMANCE BOND AND
SPECIFICATIONS

FOR

Contract 17-C-00006

West River Interceptor Cleaning

City of Tampa
CONTRACT ADMINISTRATION DEPARTMENT
TAMPA MUNICIPAL OFFICE BUILDING
306 E. JACKSON STREET - 4TH FLOOR NORTH
TAMPA, FLORIDA 33602

DECEMBER 2016

Revised 2016-08-29

CITY OF TAMPA
CONTRACT ADMINISTRATION DEPARTMENT
306 E. Jackson Street 280A4N
Tampa, FL 33602

****

BID NOTICE MEMO
****

Bids will be received no later than 1:30 p.m. on the indicated Date(s) for the following Project(s):
****

CONTRACT NO.: 17-C-00006; West River Interceptor Cleaning
BID DATE: January 10, 2017 ESTIMATE: $1,500,000 SCOPE: The project provides for furnishing all labor, materials and equipment for cleaning gravity sewer pipes of the West River Interceptor from the Perry Siphon to the Krause Pump Station by a combination hydraulic high volume water and solids separation system, including approximately 14,700 lineal feet of 60-inch diameter gravity sewer of lined Reinforced Concrete Pipe, 350 lineal feet of 48-inch diameter gravity sewer of lined Reinforced Concrete Pipe, 370 lineal feet of 36-inch diameter gravity sewer of lined Reinforced Concrete Pipe, 370 lineal feet of 36-inch diameter gravity sewer of lined Ductile Iron Pipe and 370 lineal feet of 20-inch diameter gravity sewer of lined Ductile Iron Pipe; including post sonar and CCTV inspection of all pipe lines with all associated work required for a complete project in accordance with the Contract Documents. PRE-BID CONFERENCE: Tuesday, December 13, 2016, 2:30p.m. Attendance is not mandatory, but recommended.
****

Bids will be opened in the 4th Floor Conference Room, Tampa Municipal Office Building, 306 E. Jackson Street, Tampa, Florida 33602. Pre-Bid Conference is held at the same location unless otherwise indicated. Plans and Specifications and Addenda for this work may be examined at, and downloaded from, www.demandstar.com. Backup files are available at http://www.tampagov.net/contract-administration/programs/construction-project-bidding. Subcontracting opportunities may exist for City certified Small Local Business Enterprises (SLBEs). A copy of the current SLBE directory may be obtained at www.Tampagov.net. Phone (813) 274-8456 for assistance. Email Technical Questions to: contractadministration@tampagov.net .

TABLE OF CONTENTS

BIDDING REQUIREMENTS

Notice to Bidders.....N-1
Instructions to Bidders .....I-1a thru I-4
Insurance Requirements .....INS-1 thru INS-2
SLBE Goal Setting List GS-1
Goal Contact List Instructions.....GCL-1
Sample Solicitation Letter SL-1

BID FORMS

Proposal .....P-1 thru P-3
Good Faith Efforts Compliance Plan .....GFECP
SLBE Solicited .....DMI – Solicited
SLBE Utilized .....DMI – Utilized
Bid Bond.....BB-1

CONTRACT FORMS

Agreement .....A-1 thru A-15
Public Construction Bond .....PB-1 thru PB-3

GENERAL PROVISIONS

General Provisions .....G-1 thru G-10
Specific Provisions.....SP-1- thru SP-9
Subcontractors Payment Form.....DMI - Payments
Project Sign.....Sign-1 thru Sign-2

SPECIFICATION

WORKMANSHIP AND MATERIALS

Section 17 - Lawn Replacement and Sodding.....W17-1 thru W17-2
Section 20 - Maintaining Existing Sanitary Sewer in Operation W20-1
Section 70 - Large Pipe Diameter Cleaning.....W70-1 thru W70-2
Section 72 - Sonar/Closed Circuit Television (CCTV) Inspection.....W72-1 thru W72-3
Section 113 - Disposal of Debris .....W113-1 thru W113-2

CONTRACT ITEMS

Item 100 - Contingency.....C-1
Item 0600 - Cleaning of Gravity Sewer C-1
Item 0650 - Disposal of Debris C-1
Item 9600 - Sewer Line Sonar and Closed Circuit Television (CCTV) Inspection C-2
Item 9999 - Maintenance of Traffic.....C-2

PLANS 69 Sheets of Drawings

NOTICE TO BIDDERS
CITY OF TAMPA, FLORIDA
Contract 17-C-00006; West River Interceptor Cleaning

Sealed Proposals will be received by the City of Tampa no later than 1:30 P.M., January 10, 2017, in the 4th Floor Conference Room, Tampa Municipal Office Building, 306 E. Jackson Street, Tampa, Florida, there to be publicly opened and read aloud.

The proposed work is to include, but not be limited to, cleaning gravity sewer pipes of the West River Interceptor from the Perry Siphon to the Krause Pump Station by a combination hydraulic high volume water and solids separation system, including approximately 14,700 lineal feet of 60-inch diameter gravity sewer of lined Reinforced Concrete Pipe, 350 lineal feet of 48-inch diameter gravity sewer of lined Reinforced Concrete Pipe, 370 lineal feet of 36-inch diameter gravity sewer of lined Reinforced Concrete Pipe, 370 lineal feet of 36-inch diameter gravity sewer of lined Ductile Iron Pipe and 370 lineal feet of 20-inch diameter gravity sewer of lined Ductile Iron Pipe; .including post sonar and CCTV inspection of all pipe lines with all associated work required for a complete project in accordance with the Contract Documents.

The Instructions to Bidders, Proposal, Form of Bid Bond, Agreement, Form of Public Construction Bond, Specifications, Plans and other Contract Documents are posted at DemandStar.com. Backup files may be downloaded from http://www.tampagov.net/contract-administration/programs/construction-project-bidding. One set may be available for reference at the office of the Contract Administration Department, Municipal Office Building, Fourth Floor North, City Hall Plaza, Tampa, Florida 33602.

Each Proposal must be submitted on the Proposal form included in the Specifications and must be accompanied by a certified check or cashier's check on a solvent bank or trust company in compliance with Section 255.051, Florida Statutes, made payable to the City of Tampa, in an amount of not less than five per cent of the total bid, or a Bid Bond, of like amount, on the form set forth in the Contract Documents, as a guarantee that, if the Proposal is accepted, the Bidder will execute the Proposed Contract and furnish a Public Construction Bond within twenty (20) days after receipt of Notice of Award of Contract.

To be eligible to submit a proposal, a Bidder must hold the required and/or appropriate current license, certificate, or registration (e.g. DBPR license/certificate of authorization, etc.) in good standing at the time of receipt of Bids. Per Section 489.131, Florida Statutes, Proposals submitted for the construction, improvement, remodeling, or repair of public projects must be accompanied by evidence that the Bidder holds the required and/or appropriate current certificate or registration, unless the work to be performed is exempt under Section 489.103, Florida Statutes.

The City of Tampa reserves the right to reject any or all Bids and to waive any informalities in the Bid and/or Bid Bond. Acceptance or rejection of Proposals will be made as soon as practicable after the Proposals are received, but the City reserves the right to hold Proposals for ninety (90) days from the date of Opening.

Bid Protest Procedures: Unless subsequently indicated otherwise, in a revised posting on the Department's web page for Construction Project Bidding, the City of Tampa intends to award the referenced project to the lowest bidder listed in the tabulation posted on or about the date of Bid Opening. A bidder aggrieved by this decision may file a protest not later than 4:30 P.M., five (5) business days from the first posting thereof, pursuant to City of Tampa Code Chapter 2, Article V, Division 3, Section 2-282, Procurement Protest Procedures. Protests not conforming therewith shall not be reviewed.

Any Requests For Information must be submitted by email to ContractAdministration@tampagov.net

A person or affiliate who has been placed on the convicted vendor list following a conviction for a public entity crime may not submit a bid on a contract to provide any goods or services to a public entity, may not submit a bid on a contract with a public entity for the construction or repair of a public building or public work, may not submit bids on leases of real property to a public entity, may not be awarded or perform work as a contractor, supplier, subcontractor, or consultant under a contract with any public entity, and may not transact business with any public entity in excess of the threshold amount provided in Section 287.017, for CATEGORY TWO for a period of 36 months from the date of being placed on the convicted vendor list." Refer to Section 287.133, Florida Statues.

In accordance with the City of Tampa's Equal Business Opportunity Program Ordinance, a Goal may have been established for subcontracting with Small Local Business Enterprises, SLBEs, certified by the City. Links to further information and a list of SLBEs are on the Department's Construction Project Bidding Web page. A link to the current complete directory of SLBEs is on the Minority Business Development Office Website.

Pursuant to Section 287.087, Florida Statutes, under certain circumstances preference may be given to businesses with a drug-free workplace program that meets the requirements of said Section.

INSTRUCTIONS TO BIDDERS
SECTION 1 - SPECIAL INSTRUCTIONS

I-1.01 GENERAL:

The proposed work is the West River Interceptor Cleaning in the City of Tampa, as required for a complete project, as shown on the plans and detailed in the specifications. The work is located on land owned or controlled by the City of Tampa.

To be eligible to submit a proposal, a Bidder must hold the required and/or appropriate current license, certificate, or registration (e.g. DBPR license/certificate of authorization, etc.) in good standing at the time of receipt of Bids. Per Section 489.131, Florida Statutes, Proposals submitted for the construction, improvement, remodeling, or repair of public projects must be accompanied by evidence that the Bidder holds the required and/or appropriate current certificate or registration, unless the work to be performed is exempt under Section 489.103, Florida Statutes.

I-1.02 FORM PREPARATION AND PRESENTATION OF PROPOSALS: Replace the second sentence with the following: Submission of the entire specification book is not required.

I-1.03 ADDENDA – Section I-2.03 is replaced with the following: No interpretation of the meaning of the Plans, Specifications, or other Contract Documents will be made to any Bidder orally.

Every request for such interpretation must be in writing, addressed to the City of Tampa, Contract Administration Department, 306 E. Jackson St., 4th Floor, Tampa, Florida 33602 and then emailed to ContractAdministration@tampagov.net. To be given consideration, such request must be received at least seven (7) days prior to the date fixed for the opening of the Proposals. Any and all such interpretations and any supplemental instructions will be in the form of written addenda which, if issued, will be posted on DemandStar.Com and on the Department's web page, with notice given to all prospective bidders at the respective fax numbers or e-mail addresses furnished, for such purposes. Failure of any Bidder to receive any such addenda shall not relieve said Bidder from any obligation under his Proposal as submitted. All addenda so issued shall become part of the Contract Documents.

I-1.04 INSTRUCTIONS TO BIDDERS

SECTION 2 – GENERAL INSTRUCTIONS. Section I-2.07 SIGNATURE AND QUALIFICATIONS OF BIDDERS is replaced with the following:

> Proposals must be signed in ink by the Bidder with signature in full. When firm is a Bidder, the Proposal shall be signed in the name of the firm by one or more partners. When a corporation is a bidder the officer signing shall set out the corporate name in full beneath which he shall sign his name and give the title of his office. The Proposal shall also bear the seal of the corporation attested by its secretary.
>
> If the bidder referred to in Section I-2.07 is a corporation, it must submit; upon request, a copy of its filed Articles of Incorporation. In addition, if the bidder was incorporated in another state, it must establish that it is authorized to do business in the State of Florida. If the bidder is using a fictitious name, it must submit upon request, proof of registration of such name with the Clerk of the Circuit Court of the County where its principal place of business is. Failure to submit what is required is grounds to reject the bid of that bidder.

SECTION 2 – GENERAL INSTRUCTIONS. Section I-2.14 NONDISCRIMINATION IN EMPLOYMENT is changed to add the following to the end of the existing text:

The following provisions are hereby incorporated into any contract executed by or on behalf of the City. Contractor shall comply with the following Statement of Assurance: During the performance of the Contract, the Contractor assures the City, that the Contractor is in compliance with Title VII of the 1964 Civil Rights Act, as amended, the Florida Civil Rights Act of 1992, and the City of Tampa Code of Ordinances, Chapter 12, in that Firm/Contractor does not on the grounds of race, color, national origin, religion, sex, sexual orientation, gender identity or expression, age, disability, familial status, or marital status, discriminate in any form or manner against said Firm's/Contractor's employees or applicants for employment. Contractor understands and agrees that the Contract is conditioned upon the veracity of this Statement of Assurance, and that violation of this condition shall be considered a material breach of the Award/Contract. Furthermore, Contractor herein assures the City that said Contractor will comply with Title VI of the Civil Rights Act of 1964 when federal grant(s) is/are

involved. This Statement of Assurance shall be interpreted to include Vietnam-Era Veterans and Disabled Veterans within its protective range of applicability. Firm/Contractor further acknowledges and agrees to provide the City with all information and documentation that may be requested by the City from time to time regarding the solicitation, selection, treatment and payment of subcontractors, suppliers and vendors in connection with this Award/Contract. Firm/Contractor further acknowledges that it must comply with City of Tampa Code of Ordinances, Chapter 26.5, as enacted by Ordinance No. 2008-89.

I-1.05 TIME FOR COMPLETION:

The work shall be arranged to be completed in accordance with a progress schedule approved by the Construction Engineer.

The time for completion of this project, referred in Article 4.01 of the Agreement, shall be 120 consecutive calendar days. The period for performance shall start from the date indicated in the Notice To Proceed.

I-1.06 LIQUIDATED DAMAGES:

The amount of liquidated damages, referred to in Article 4.06 of the Agreement, for completion of this project shall be $500.00 per calendar day.

I-1.07 BASIS OF AWARD OF CONTRACT:

The basis of award referred to in Item I-2.11 of Instructions to Bidders shall be the greatest amount of work, which can be accomplished within the funds available as budgeted. The award may be made on the basis of the total bid, base bid, alternates(s) if any, unit bids if any, or any combination thereof deemed to be in the best interest of the City.

Unless all bids are rejected, the award will be made within 90 days after opening proposals.

I-1.08 GROUND BREAKING CEREMONY:

Arrangement may be made by the City in coordination with the Contractor, for construction to commence with a Ground Breaking Ceremony. Details will be discussed at the pre-construction conference.

I-1.09 INSURANCE:

The insurance required for this project shall be as indicated on the attached and incorporated Special Instructions pages beginning with page INS-1 entitled CITY OF TAMPA INSURANCE REQUIREMENTS, which among other things requires the Contractor to provide a Certificate of Insurance to the City prior to commencing work. The City may from time to time use a third party vendor to manage its insurance certificates and related documentation which vendor may periodically initiate contact, requests for information, etc. on the City's behalf.

I-1.10 EQUAL BUSINESS OPPORTUNITY PROGRAM / SLBE / REQUIREMENTS

BIDDERS MUST SUBMIT COMPLETED FORMS MBD-10 AND MBD-20 WITH BIDS. BIDS SUBMITTED WITHOUT THE COMPLETED FORMS (INCLUDING SIGNATURES) WILL BE DEEMED NON-RESPONSIVE.

In accordance with the City of Tampa's Equal Business Opportunity Program, a Goal of _____% has been established for subcontracting with Small Local Business Enterprises, (SLBEs), certified by the City. The goal is based upon the availability of the firms listed on the Subcontract Goal Contract List included herein.

BIDDERS MUST SOLICIT ALL SLBES ON THAT LIST and provide documentation of emails, faxes, phone calls, letters, or other communication with the firms as a first step to demonstrate Good Faith Efforts to achieve the goal. The list is formatted to facilitate e-mail solicitations to the listed firms by copying and pasting e-mail addresses.

INSTRUCTIONS TO BIDDERS
SECTION 1 - SPECIAL INSTRUCTIONS

Bidders may explore other opportunities for subcontracting with SLBEs by consulting the current directory of all certified SLBEs posted on the Minority Business Development Office web page.

GOOD FAITH EFFORT COMPLIANCE PLAN REQUIRED - When a Goal has been established, the Bidder must submit, with its bid, completed to the fullest extent possible, a Good Faith Effort Compliance Plan using the form GFECP contained herein. Additional documentation is required whenever an SLBE subcontractor's low quote is not utilized. Supplemental information or documentation concerning the Bidder's Compliance Plan may be required prior to award as requested by the City.

DIVERSITY MANAGEMENT INITIATIVE, DMI, DATA REPORTING FORMS REQUIRED - Bidders must submit, with its bid, "DMI-Solicited" forms listing all subcontractors solicited and "DMI-Utilized" forms listing all subcontractors to be utilized. Supplemental forms, documentation, or information may be submitted at bid time or as requested by the City.

After an award, "DMI-Payments" forms are to be submitted with payment requests to report payments to subcontractors.

Bidders may visit the Minority Business Development Office's web page at TampaGov.net for other information about the SLBE program, FAQ's, and the latest SLBE directory of certified firms.

I-1.11 BID SECURITY:

Surety companies shall have a rating of not less than B+ Class VI as evaluated in the most recently circulated Best KeyRating Guide Property/Casualty.

I-1.12 PUBLIC CONSTRUCTION BOND:

The Bidder who is awarded the Contract will be required to furnish a Public Construction Bond upon the form provided herein, equal to 100 percent of the Contract price, such Bond to be issued and executed by (a) surety company(ies) acceptable to the City and licensed to underwrite contracts in the State of Florida. After execution of the Agreement and before commencing work, the Contractor must provide the City a certified copy of the officially recorded Bond.

I-1.13 AGREEMENT

SECTION 2 – POWERS OF THE CITY'S REPRESENTATIVES, new Article 2.05:
Add the following:

Article 2.05 CITY'S TERMINATION FOR CONVENIENCE:

The City may, at any time, terminate the Contract in whole or in part for the City's convenience and without cause. Termination by the City under this Article shall be by a notice of termination delivered to the Contractor, specify the extent of termination and the effective date.

Upon receipt of a notice of termination, the Contractor shall immediately, in accordance with instructions from the City, proceed with performance of the following duties regardless of delay in determining or adjusting amounts due under this Paragraph:

(a) cease operations as specified in the notice;
(b) place no further orders and enter into no further subcontracts for materials, labor, services or facilities except as necessary to complete continued portions of the Contract;
(c) terminate all subcontracts and orders to the extent they relate to the Work terminated;
(d) proceed to complete the performance of Work not terminated; and
(e) take actions that may be necessary, or that the City may direct, for the protection and preservation of the terminated Work.

The amount to be paid to the Contractor by the City because of the termination shall consist of:

(a) for costs related to work performed on the terminated portion of the Work prior to the effective date including termination costs relative to subcontracts that are properly chargeable to the terminated portion of the Work;

(b) the reasonable costs of settlement of the Work terminated, including accounting, legal, clerical and other expenses reasonable necessary for the preparation of termination settlement proposals and supporting data; additional costs of termination and settlement of subcontracts excluding amounts of such settlements; and storage, transportation, and other costs incurred which are reasonably necessary for the preservation, protection or disposition of the terminated Work; and

(c) a fair and reasonable profit on the completed Work unless the Contractor would have sustained a loss on the entire Contract had it been completed.

Allowance shall be made for payments previously made to the Contractor for the terminated portion of the Work, and claims which the City has against the Contractor under the Contract, and for the value of materials supplies, equipment or other items that are part of the costs of the Work to be disposed of by the Contractor.

SECTION 5 – SUBCONTRACTS AND ASSIGNMENTS, Article 5.01, Page A-7, last paragraph:
Change "…twenty-five (25) percent…" to "…fifty-one (51) percent…"

SECTION 8 – CONTRACTOR'S EMPLOYEES, Article 8.03, Page A-9, delete Article 8.03 in its entirety and Replace with the following new article:

ARTICLE 8.03 EMPLOYMENT OPPORTUNITIES
The Contractor shall, in the performance of the work required to be done under this Contract, employ all workers without discrimination and must not maintain, provide or permit facilities that are segregated.

SECTION 10 – PAYMENTS, Article 10.05, Page A-10, 1st Paragraph, 1st Sentence:
Change "…fair value of the work done, and may apply for…" to "…fair value of the work done, and shall apply for…"

SECTION 11 – MISCELLANEOUS PROVISIONS, Article 11.02, Page A-12, 1st Paragraph, 2nd Sentence:
Delete the 2nd Sentence in its entirety and replace it with the following new 2nd Sentence:

Without limiting application of Article 11.07, below, whenever the Contractor is required or desires to use any design, device, material, or process covered by letters of patent or copyright, the Contractor shall indemnify, defend, and hold harmless the City Indemnified Parties (as defined below) from any and all Claims (as defined below) for infringement by reason of the use of any such patented design, device, tool, material, equipment, or process, to be performed under the Contract and damages which may be incurred by reason of such infringement at any time during the prosecution or after completion of the work.

SECTION 11 – MISCELLANEOUS PROVISIONS, Article 11.03, Page A-12:
Delete Article 11.03 in its entirety and replace with the following new article:

ARTICLE 11.03 INTENTIONALLY OMITTED.

SECTION 11 – MISCELLANEOUS PROVISIONS, Article 11.07, Page A-12:
Delete Article 11.07 in its entirety and replace with the following new article:

ARTICLE 11.07 INDEMNIFICATION PROVISIONS
Whenever there appears in this Agreement, or in the other Contact Documents made a part hereof, an indemnification provision within the purview of Chapter 725.06, Laws of Florida, the monetary limitation on the extent of the indemnification under each such provision shall be One Million Dollars or a sum equal to the total Contract price, whichever shall be the greater.

Contractor releases and agrees to defend, indemnify and hold harmless the City, its officers, elected and appointed officials, employees, and/or agents (collectively, "City Indemnified Parties") from and against any and all losses, liabilities, damages, penalties, settlements, judgments, charges, or costs (including without limitation attorneys' fees, professional fees, or other expenses) of every kind and character arising out of any and all claims, liens, is entitled to indemnification hereunder. This obligation shall in no way be limited in any nature whatsoever by any limitation on the amount or type of Contractor's insurance coverage.

The parties agree that to the extent the written terms of this indemnification are deemed by a court of competent jurisdiction to be in conflict with any provisions of Florida law, in particular Sections 725.06 and 725.08, Florida Statutes, the written terms of this indemnification shall be deemed by any court of competent jurisdiction to be modified in such a manner as to be in fully and complete compliance with all such laws and to contain such limiting conditions or limitations of liability, or to not contain any unenforceable or prohibited term or terms, such that this indemnification shall be enforceable in accordance with and to the maximum extent permitted by Florida law.

The obligation of Contractor under this Article is absolute and unconditional; it is not conditioned in any way on any attempt by a City Indemnified Party to collect from an insurer any amount under a liability insurance policy, and is not subject to any set-off, defense, deduction, or counterclaim that the Contactor might have against the City Indemnified Party. The duty to defend hereunder is independent and separate from the duty to indemnify, and the duty to defend exists regardless of any ultimate liability of Contractor, the City, and any City Indemnified Party. The duty to defend arises immediately upon presentation of a Claim by any party and written notice of such Claim being provided to Contractor. Contractor's defense and indemnity obligations hereunder will survive the expiration or earlier termination of this Contract.

Contractor agrees and recognizes that the City Indemnified Parties shall not be held liable or responsible for any Claims which may result from any actions or omissions of Contractor in which the City Indemnified Parties participated either through providing data or advice and/or review or concurrence of Contractor's actions. In reviewing, approving or rejecting any submissions by Contractor or other acts of Contractor, the City in no way assumes or shares any responsibility or liability of Contractor or any tier of subcontractor/subconsultant/supplier, under this Contract.

In the event the law is construed to require a specific consideration for such indemnification, the parties agree that the sum of Ten Dollars and 00/100 ($10.00), receipt of which is hereby acknowledged, is the specific consideration for such indemnification and the providing of such indemnification is deemed to be part of the specifications with respect to the services provided by Contractor.

SECTION 11 – MISCELLANEOUS PROVISIONS, Article 11.12, Page A-13:
Change Article 11.12 to add the following new language after existing text:

The City of Tampa is a public agency subject to Chapter 119, Florida Statutes. In accordance with Florida Statutes, 119.0701, Contractor agrees to comply with Florida's Public Records Law, including the following:

1. Contractor shall keep and maintain public records required by the City to perform the services under this Agreement;

2. Upon request by the City, provide the City with copies of the requested records, having redacted records in total on in part that are exempt from disclosure by law or allow the records to be inspected or copied within a reasonable time (with provision of a copy of such records to the City) on the same terms and conditions that the City would provide the records and at a cost that does not exceed that provided in Chapter 119, Florida Statutes, or as otherwise provided by law;

3. Ensure that records, in part or in total, that are exempt or that are confidential and exempt from disclosure requirements are not disclosed except as authorized by law for the duration of the Agreement term and following completion (or earlier termination) of the Agreement if Contractor does not transfer the records to the City;

4. Upon completion (or earlier termination) of the Agreement, Contractor shall within 30 days after such event either transfer to the City, at no cost, all public records in possession of the Contractor or keep and maintain the public records in compliance with Chapter 119, Florida Statutes. If Contractor transfers all public records to the City upon completion (or earlier termination) of the Agreement, Contractor shall destroy any duplicate records that

are exempt or confidential and exempt from public records disclosure requirements. If Contractor keeps and maintains public records upon completion (or earlier termination) of the Agreement, Contractor shall meet all applicable requirements for retaining public records. All records stored electronically must be provided to the City in a format that is compatible with the information technology systems of the agency.

The failure of Contractor to comply with Chapter 119, Florida Statutes, and/or the provisions set forth in this Article shall be grounds for immediate unilateral termination of the Agreement by the City; the City shall also have the option to withhold compensation due Contractor until records are received as provided herein.

IF CONTRACTOR HAS QUESTIONS REGARDING THE APPLICATION OF CHAPTER 119, FLORIDA STATUTES, TO CONTRACTOR'S DUTY TO PROVIDE PUBLIC RECORDS RELATING TO THIS AGREEMENT, CONTACT THE CUSTODIAN OF PUBLIC RECORDS AT 813-274-8598, JIM.GREINER@TAMPAGOV.NET, AND CONTRACT ADMINISTRATION DEPARTMENT, TAMPA MUNICIPAL OFFICE BUILDING, 4TH FLOOR, 306 E. JACKSON ST. TAMPA, FLORIDA 33602.

I-1.14 Contractors must utilize the U.S. Department of Homeland Security's E-Verify Systems to verify the employment eligibility of all persons employed during the term of the Contract to perform employment duties within the State of Florida and all persons, including subcontractors, assigned by Contractor to perform work pursuant to the contract.

I-1.15 GENERAL PROVISIONS; G-2.02 Copies Furnished to Contractor: Replace the first paragraph with the following:

The Contractor shall acquire for its use copies of the plans and specifications as needed, which may be downloaded from the City's web site, at http://www.tampagov.net/dept_contract_administration/programs_and_services/construction_project_bidding/index.asp

Bidder as part of the solicitation process (and as Contractor if Bidder is successful) may hold, come into possession of, and/or generate certain building plans, blueprints, schematic drawings, including draft, preliminary, and final formats, which depict the internal layout and structural elements of a building, facility, or other structure owned or operated by the City or an agency (singularly or collectively "Exempt Plans"), which pursuant to Section 119.071(3), Florida Statutes, are exempt from Section 119.07(1), Florida Statutes and Section 24(a), Art. I of the Florida State Constitution. Contractor certifies it has read and is familiar the exemptions and obligations of Section 119.071(3), Florida Statutes; further that Contractor is and shall remain in compliance with same, including without limitation maintaining the exempt status of such Exempt Plans, for so long as any Exempt Plans are held by or otherwise in its possession.

I-1.16 PAYMENT DISPUTE RESOLUTION

Any dispute pertaining to pay requests must be presented to the City pursuant to Executive Order 2003-1.

I-1.17 SCRUTINIZED COMPANIES.

Section 287.135, Florida Statutes, prohibits agencies or local governmental entities from contracting with companies for goods or services of $1 million or more that are on either the Scrutinized Companies with Activities in Sudan List or the Scrutinized Companies with Activities in the Iran Petroleum Energy Sector List, created pursuant to Section 215.473, Florida Statues, or is on the Scrutinized Companies that Boycott Israel List, created pursuant to Section 215.4725, Florida Statues, (effective October 1, 2016), or is engaged in a boycott of Israel (effective October 1, 2016), or is engaged in business operations in Cuba or Syria. A company that is on either the Scrutinized Companies with Activities in Sudan List or the

INSTRUCTIONS TO BIDDERS
SECTION 1 - SPECIAL INSTRUCTIONS

Scrutinized Companies with Activities in the Iran Petroleum Energy Sector List, created pursuant to Section 215.473, Florida Statues, or is on the Scrutinized Companies that Boycott Israel List, created pursuant to Section 215.4725, Florida Statues, (effective October 1, 2016) or is engaged in a boycott of Israel (effective October 1, 2016) or is engaged in business operations in Cuba or Syria is ineligible to, and may not, bid on, submit a proposal for, or enter into or renew a contract with an agency or local governmental entity for goods or services of $1 million or more. Contractor certifies that it is not in violation of Section 287.135, Florida Statutes. For contracts $1,000,000 and greater, if the City determines the Contractor submitted a false certification under Section 287.135(5) of the Florida Statutes, or has been placed on the Scrutinized Companies with Activities in the Sudan List or the Scrutinized Companies with Activities in the Iran Petroleum Energy Sector List, or is on the Scrutinized Companies that Boycott Israel List, created pursuant to Section 215.4725, Florida Statues, (effective October 1, 2016), or is engaged in a boycott of Israel (effective October 1, 2016), or been engaged in business operations in Cuba or Syria, the City shall either terminate the Agreement after it has given the Contractor notice and an opportunity to demonstrate the City's determination of false certification was in error pursuant to Section 287.135(5)(a) of the Florida Statutes, or maintain the Agreement if the conditions of Section 287.135(4) of the Florida Statutes are met.

I-1.18 FLORIDA'S PUBLIC RECORDS LAW; DATA COLLECTION

Pursuant to Section 119.071(5)(a)2a, Florida Statutes, social security numbers shall only be collected from Bidders and/or Contractor by the City should such number be needed for identification, verification, and/or tax reporting purposes. To the extent Bidder and/or Contractor collects an individual's social security number in the course of acting on behalf of the City pursuant to the terms and conditions of its Proposal or, if awarded, the Agreement, Bidder and/or Contractor shall follow the requirements of Florida's Public Records Law.

[REMAINDER OF PAGE INTENTIONALLY LEFT BLANK]

SECTION 2
GENERAL INSTRUCTIONS

I-2.01 BIDDER'S RESPONSIBILITY
Before submitting Proposals, Bidders shall carefully examine the entire site of the proposed work and adjacent premises and the various means of approach and access to the site, and make all necessary investigations to inform themselves thoroughly as to the facilities necessary for delivering, placing and operating the necessary construction equipment, and for delivering and handling materials at the site, and inform themselves thoroughly as to all difficulties involved in the completion of all the work in accordance with the Contract Documents.

Bidders must examine the Plans, Specifications, and other Contract Documents and shall exercise their own judgment as to the nature and amount of the whole of the work to be done, and for the bid prices must assume all risk of variance, by whomsoever made, in any computation or statement of amounts or quantities necessary to complete the work in strict compliance with the Contract Documents.

Elevations of the ground are shown on the Plans and are believed to be reasonably correct, but are not guaranteed to be absolutely so and are presented only as an approximation. Bidders shall satisfy themselves as to the correctness of all elevations.

The City may have acquired, for its own use, certain information relating to the character of materials, earth formations, probable profiles of the ground, conditions below ground, and water surfaces to be encountered at the site of the proposed work. This information, if it exists, is on file at the offices of the Department of Public Works and Bidders will be permitted to see and examine this information for whatever value they consider it worth. However, this information is not guaranteed, and Bidders should satisfy themselves by making borings or test pits, or by such other methods as they may prefer, as to the character, location, and amounts of water, peat, clay, sand, quicksand, gravel, boulders, conglomerate, rock, gas or other material to be encountered or work to be performed.

Various underground and overhead structures and utilities are shown on the plans. The location and dimensions of such structures and utilities, where given, are believed to be reasonably correct, but do not purport to be absolutely so. These structures and utilities are plotted on the Plans for the information of the Bidders, but information so given is not to be construed as a representation or assurance that such structures will be found or encountered as plotted, or that such information is complete or accurate.

I-2.02 FORM, PREPARATION AND PRESENTATION OF PROPOSALS
Each Proposal shall be submitted upon the Proposal Form and in accordance with the instructions included herein. The Proposal Form must not be detached herefrom. All blank spaces for bid prices must be filled in, in both words and figures, with the unit or lump sum prices, or both, for which the Proposal is made. The computed total price for each unit price Contract Item shall be determined by multiplying the estimated quantity of the item, as set forth in the Proposal Form, by the corresponding unit price bid for such item. The resulting product shall be entered in the appropriate blank space under the column headed "Computed Total Price for Item". The lump sum price bid for each lump sum price Contract Item shall also be entered in the column headed "Computed Total Price for Item". If a Proposal contains any omissions, erasures, alterations, additions, or items not called for in the itemized Proposal, or contains irregularities of any kind, such may constitute sufficient cause for rejection of the Proposal. In case of any discrepancy in the unit price or amount bid for any item in the Proposal, the price as expressed in written words will govern. In no case is the Agreement Form to be filled out or signed by the Bidder.

In the case of certain jobs bid Lump Sum a "Schedule of Unit Prices" must be filled out as an attachment to the Lump Sum proposal. These prices may be used as a guide for the negotiation of change orders, at the City's option.

The proposal must be signed and certified and be presented on the prescribed form in a sealed envelope on/or before the time and at the place stated in the Notice of Bidders, endorsed with the name of the person, firm or corporation presenting it, the date of presentation, and the title of the work for which the Proposal is made.

Unless the apparent low bidder is now engaged in or has recently completed contract work for the City of Tampa, he, if requested, shall furnish to the City, after the opening of bids and prior to award, a summary statement of record of construction experience over the past three (3) years with proper supporting evidence, and, if required by the City, shall also furnish a list of equipment and other facilities pertinent to and available for the proper execution of the proposed work, and a statement of financial resources to the extent necessary to establish ability to carry on the proposed work. The City may make further investigations as considered necessary with respect to responsibility of the Bidder to whom it appears may be awarded the Contract.

If forwarded by mail, the sealed envelope containing the Proposal, endorsed as directed above, must be enclosed in another envelope addressed as specified in the Notice to Bidders and sent by registered mail.

I-2.03 ADDENDA AND INTERPRETATIONS
No interpretation of the meaning of the Plans, Specifications, or other Contract Documents will be made to any Bidder orally.

Every request for such interpretation must be in writing, addressed to the Contract Administration Department, Tampa Municipal Office Building, 4th Floor North, City Hall Plaza, Tampa, Florida 33602. To be given consideration, such request must be received at least seven (7) days prior to the date fixed for the opening of the Proposals. Any and all such interpretations and any supplemental instructions will be in the form of written addenda which, if issued, will be sent by certified mail, with return receipt requested, to all prospective bidders at the respective addresses furnished, for such purposes, not later than three (3) working days prior to the date fixed for the opening of the Proposals, and if requested, a copy will be delivered to the prospective bidder's representative. Failure of any Bidder to receive any such addenda shall not relieve said Bidder from any obligation under his Proposal as submitted. All addenda so issued shall become part of the Contract Documents.

I-2.04 BID SECURITY
Each Proposal must be accompanied by a certified or cashier's check issued by a solvent bank or trust company and payable at sight to the City of Tampa, in compliance with Section 255.051 Florida Statutes, or a Bid Bond upon the form provided herein, in an amount of not less than five percent of the sum of the computed total amount of the Bidder's Proposal as a guarantee that if the Proposal is accepted, the Bidder will execute and fill in the proposed Contract and Public Construction Bond within twenty (20) days after notice of award of the Contract. Certified checks shall have all necessary documentary revenue stamps attached if required by law. Surety on Bid Bonds shall be a duly authorized surety company authorized to do business in the State of Florida, and all such Bonds shall be issued or countersigned by a local resident producing agent, and satisfactory evidence of the authority of the person or persons executing such Bond to Execute the same shall be submitted with the Bond. Bid Bonds shall be issued by a surety company acceptable to the City.

Within ten (10) days after the opening of Proposals, the bid security of all but the three lowest Bidders will be returned. The bid security of the remaining two Bidders whose Proposals are not accepted will be

returned within ten (10) days after the execution of the Contract, or, if no such Contract has been executed, within ninety (90) days after the date of opening Proposals. The bid security of the Bidder whose Proposal is accepted will be returned only after he has duly executed the Contract and furnished the required Public Construction Bond and insurance.

Should it be necessary for the City to retain the bid security and said bid security is in the form of checks, the checks of these Bidders will be returned if replaced by Bid Bonds in an amount equal to the amount of the checks of such Bidders in such form and issued by a surety company acceptable to the City.

A Bidder may withdraw his Proposal before the time fixed for the opening of Proposals, without prejudice to himself, by communicating his purpose, in writing, to the Mayor and City Council, and when his communication is received, the Proposal will be handed to him or his authorized agent unopened. No Bidder may withdraw his Proposal within ninety (90) days after the day of opening Proposals.

The Bidder whose Proposal is accepted shall enter into a written contract, upon the Agreement form included herein, for the performance of the work and furnish the required Public Construction Bond within twenty (20) days after written notice by the City of Award of Contract has been served on such Bidder personally or after receipt of the written notice by registered mail to such Bidder at the address given in his Proposal.

If the Bidder to whom a Contract is awarded refuses or neglects to execute it or fails to furnish the required Public Construction Bond within twenty (20) days after receipt by him of the Notice of Award of Contract, the amount of his bid security shall be forfeited and shall be retained by the City as liquidated damages, and not as a penalty, it being now agreed that said sum is a fair estimate of the amount of damages that the City will sustain in case said Bidder fails to enter into a Contract and furnish the required Public Construction Bond. If a Bid Bond was furnished, the full amount of the Bond shall become due and payable as liquidated damages caused by such failure. The full amount of the bid security shall be forfeited as liquidated damages without consideration of the fact that an award may be less than the full amount of the Bidder's Proposal, excepting that the award shall be within the conditions of said Proposal relating to the basis of consideration for an award. No plea of mistake in the bid or misunderstanding of the conditions of forfeiture shall be available to the Bidder for the recovery of his deposit or as a defense to any action based upon the neglect or refusal to execute a contract.

I-2.05 LAWS AND REGULATIONS
The Bidder who is awarded the Contract must comply with all laws of the State of Florida, and all applicable Ordinances of the City of Tampa respecting labor and compensation and with all other statutes, ordinances, rules and regulations applicable and having the force of law.

I-2.06 PUBLIC CONSTRUCTION BOND
The Bidder who is awarded the Contract will be required to furnish a Public Construction Bond upon the form provided herein, equal to 100 percent of the Contract price, such Bond to be executed by a surety company acceptable to the City of Tampa and licensed to underwrite contracts in the State of Florida. Surety companies shall have a rating of not less than: B+ Class VI as evaluated in the most recently circulated BEST'S KEY RATING GUIDE PROPERTY-LIABILITY.

I-2.07 SIGNATURE AND QUALIFICATIONS OF BIDDERS
Proposals must be signed in ink by the Bidder with signature in full. When a firm is a Bidder, the Proposal shall be signed in the name of the firm by one or more of the partners. When a corporation is a Bidder the officer signing shall set out the corporate name in full beneath which he shall sign his name and give the title of his office. The Proposal shall also bear the seal of the corporation attested by its secretary. Anyone signing the Proposal as agent must file with it legal evidence of his authority to do so.

Bidders who are nonresident corporations shall furnish to the City a duly certified copy of their permit to transact business in the State of Florida, signed by the Secretary of State, within ten days of the notice to do so. Such notice will be given to Bidders who are nonresident corporations, to whom it appears an award will be made, and the copy of the permit must be filed with the City before the award will be made. Failure to promptly submit this evidence of qualification to do business in the State of Florida may be basis for rejection of the Proposal.

I-2.08 REJECTION OF PROPOSALS
The City reserves the right to reject any Proposal if investigation of the Bidder fails to satisfy the City that such Bidder is properly qualified to carry out the obligations and to complete the work contemplated therein. Any or all Proposals will be rejected if there is reason to believe that collusion exists among Bidders. Proposals will be considered irregular and may be rejected if they show serious omissions, alterations in form, additions not called for, conditions or unauthorized alternates, or irregularities of any kind. The City reserves the right to reject any or all Proposals and to waive such technical errors as may be deemed best for the interests of the City.

I-2.09 QUANTITIES ESTIMATED ONLY
The estimate of quantities of the various items of work and materials, if set forth in the Proposal Form, is approximate only and is given solely to be used as a uniform basis for the comparison of Proposals. The quantities actually required to complete the Contract work may be less or more than so estimated, and if awarded a Contract for the work specified, the Contractor agrees that he will not make any claim for damages or for loss of profits because of a difference between the quantities of the various classes of work assumed for comparison of Proposals and quantities of work actually performed. The City further reserves the right to vary the quantities in any amount.

I-2.10 COMPARISON OF PROPOSALS
Except jobs bid on a "One Lump Sum" basis, proposals will be compared on the basis of a total computed price arrived at by taking the sum of the estimated quantity of each time and the corresponding unit price of each item, and including any lump sum prices on individual items.

The computed total prices for individual Contract Items and the total computed price for the entire Contract, as entered by the Bidder in the Proposal Form, are for convenience only and are subject to correction in the tabulation and computation of the Proposals.

I-2.11 BASIS OF AWARD
The Contract will be awarded, if at all, to the lowest responsible Bidder or Bidders, as determined by the City and by the terms and conditions of the Contract Documents. Unless all bids are rejected, the award will be made within ninety (90) days after the opening of Proposals. The successful Bidder will be required to possess, or obtain, a valid City Occupational License.

I-2.12 INSURANCE REQUIRED
The successful Bidder and his subcontractors will be required to procure and pay for insurance covering the work in accordance with the provisions of Article 6.02 of the Agreement as indicated on special instructions pages beginning with INS-1.

I-2.13 NO ASSIGNMENT OF BID
No Bidder shall assign his bid or any rights thereunder.

I-2.14 NONDISCRIMINATION IN EMPLOYMENT
Contracts for work under this Proposal will obligate the contractors and subcontractors not to discriminate in employment practices.

Bidders must, if requested, submit with their initial bid a signed statement as to whether they have previously performed work subject to the President's Executive Order Nos. 11246 and 11375.
Bidders must, if requested, submit a compliance report concerning their employment practices and policies in order to maintain their eligibility to receive the award of the Contract.

Successful Bidders must, if requested, submit a list of all subcontractors who will perform work on the project and written,

signed statement from authorized agents of the labor pools with which they will or may deal for employees on the work together with supporting information to the effect that said labor pools practices and policies are in conformity with Executive Order No. 11246 and that said labor pools will affirmatively cooperate in or offer no hindrance to the recruitment, employment and equal treatment of employees seeking employment and performing work under the Contract, or a certification as to what efforts have been made to secure such statements when such agents or labor pools have failed or refused to furnish them prior to the award of the Contract.

I-2.15 LABOR STANDARDS
The Bidder's attention is directed to the Contract Provisions of the Labor Standards for federally assisted projects which may be attached to and made a part of the Agreement.

I-2.16 NOTICE TO LABOR UNIONS
If applicable, the successful Bidder will be required to provide Labor Unions and other organizations of workers a completed copy of the form entitled "Notice to Labor Unions or Other Organizations of Workers", and such form may be made a part of the Agreement.

I-2.17 NOTICE TO PROSPECTIVE FEDERALLY-ASSISTED CONSTRUCTION CONTRACTORS
A Certification of Nonsegregated Facilities, as required by the May 9, 1967, Order (32 F.R. 7439, May 19, 1967) on Elimination of Segregated Facilities, by the Secretary of Labor, must be submitted to said Secretary prior to the award of a federally-assisted construction and Contract exceeding $10,000 which is not exempt from the provisions of the Equal Opportunity Clause. The form of certification may be bound herein following the form of Bid Bond.

Contractors receiving federally-assisted construction Contract awards exceeding $10,000 which are not exempt from the provisions of the Equal Opportunity Clause will be required to provide for the forwarding of the following notice to prospective subcontractor for supplies and construction contracts where the subcontracts exceed $10,000 and are not exempt from the provisions of the Equal Opportunity Clause:

NOTICE TO PROSPECTIVE SUBCONTRACTORS OF REQUIREMENT
FOR CERTIFICATIONS OF NONSEGREGATED FACILITIES

"A Certification of Nonsegregated Facilities, as required by the May 9, 1967, Order (32 F.R. 7439, May 19, 1967) on Elimination of Segregated Facilities, by the Secretary of Labor, must be submitted prior to the award of a subcontract exceeding $10,000 which is not exempt from the provisions of the Equal Opportunity Clause."

"Contractors receiving subcontract awards exceeding $10,000 which are not exempt from the provisions of the Equal Opportunity Clause will be required to provide from the forwarding of this notice to prospective subcontractors for supplies and construction contracts where the subcontracts exceed $10,000 and are not exempt from the provisions of the Equal Opportunity Clause."

The United States requires a pre-award conference if a proposed construction contract exceeds one million dollars to determine if the the prospective contractor is in compliance with the Equal Employment Opportunity requirements of Executive Order 11246 of September 24, 1965. In such instances, a meeting may be scheduled at which the prospective contractor must specify what affirmative action he has taken or proposed to take to assure equal employment opportunity which must be approved by the United States before award of the contract will be authorized.

Bidders must be prepared to submit an Equal Employment Opportunity (EEO) plan at a pre-award conference. The plan must include bidding opportunities offered by the Bidder to minority subcontractors.

On October 13, 1971, President Nixon issued Executive Order 11246 emphasizing the government's commitment to the promotion of minority business enterprise. Accordingly, the United States is firmly committed to the utilization of available resources to support this important program. U.S. agencies are most interested in realizing minority participation on the subject. Achieving equal employment opportunity compliance is required through Executive Order 11246. WE cannot emphasize too strongly that minority subcontractors be extended subcontractors bidding opportunities as but one step in your affirmative action policy.

Due to the importance of this contract, U.S. Agencies may conduct an EEO Conference prior to the award of the Contract. It is suggested that the responsive Bidder confirm the minority subcontractors he contacted for bids or quotations in his EEO plan submitted at the conference.

I-2.18 EEO AFFIRMATIVE ACTION REQUIREMENTS
By the submission of a Proposal, each Bidder acknowledges that he understands and will agree to be bound by the equal opportunity requirements of Federal regulations which shall be applicable throughout the performance of work under any contract awarded pursuant to solicitation. Each Bidder agrees that if awarded a contract, he will similarly bind contractually each subcontractor. In policies, each Bidder further understands and agrees that if awarded a contract, he must engage in Affirmative Action directed to promoting and ensuring equal employment opportunity in the work force used under the contract (and he must require contractually the same effort of all subcontractors whose subcontracts exceed $100,000). The Bidder understands and agrees that "Affirmative Action" as used herein shall constitute a good faith effort to achieve and maintain minority employment in each trade in the on-site work force used on the project. * * * * * * * END of SECTION * * * * * * *

CITY OF TAMPA INSURANCE REQUIREMENTS

Prior to commencing any work or services or taking occupancy under that certain written agreement or award (for purposes of this document, Agreement) between the City of Tampa, Florida (City) and Firm/Awardee/Contractor/Consultant/Lessee/non-City party, etc. (for purposes of this document, Firm) to which this document is attached and incorporated as an Exhibit or otherwise, and continuing during the term of said Agreement (or longer if the Agreement and/or this document so requires), Firm shall provide, pay for, and maintain insurance against claims for injuries to persons (including death) or damages to property which may arise from or in connection with the performance of the Agreement (including without limitation occupancy and/or use of certain property/premises) by Firm, its agents, representatives, employees, suppliers, subtenants, or subcontractors (which term includes sub-consultants, as applicable) of any tier subject to the terms and conditions of this document. Firm's maintenance of insurance coverage as required herein is a material element of the Agreement and the failure to maintain or renew coverage or provide evidence of same (defined to include without limitation Firm's affirmative duty to provide from time to time upon City's request certificates of insurance, complete and certified copies of Firm's insurance policies, forms, and endorsements, information on the amount of claims payments or reserves chargeable to the aggregate amount of coverage(s) whether during the term of the Agreement or after as may be requested by the City in response to an issue or potential claim arising out of or related to the Agreement to which Firm's insurance obligations hereunder may apply or possibly help mitigate) may be treated as a material breach of the Agreement. Should at any time Firm not maintain the insurance coverages required, City at its sole option (but without any obligation or waiver of its rights) may (i) terminate the Agreement or (ii) purchase such coverages as City deems necessary to protect the itself (charging Firm for same) and at City's option suspending Firm's performance until such coverage is in place. If Firm does not reimburse City for such costs within 10 days after demand, in addition to any other rights, City shall also have the right to offset such costs from amounts due Firm under any agreement with the City. All provisions intended to survive or to be performed subsequent to the expiration or termination of the Agreement shall survive, including without limitation Firm's obligation to maintain or renew coverage, provide evidence of coverage and certified copies of policies, etc. upon City's request and/or in response to a potential claim, litigation, etc.

The City reserves the right from time to time to modify or waive any or all of these insurance requirements (or to reject policies) based on the specific nature of goods/services to be provided, nature of the risk, prior experience, insurer, coverage, financial condition, failure to operate legally, or other special circumstances. If Firm maintains broader coverage and/or higher limits than the minimums shown herein, the City requires and shall be entitled to such broader coverage and/or higher limits maintained by Firm. Any available insurance proceeds in excess of the specified minimum limits of insurance and coverage shall be available to the City. No representation is made that the minimum insurance requirements are sufficient to cover Firm's interests, liabilities, or obligations. Required insurance shall not limit Firm's liability.

Firm acknowledges and agrees Firm and not the City is the party in the best position to determine applicability (e.g. "IF APPLICABLE"), confirm, and/or verify its insurance coverage. Acceptance by the City, or by any of its employees, representatives, agents, etc. of certificates or other documentation of insurance or policies pursuant to the terms of this document and the Agreement evidencing insurance coverages and limits does not constitute approval or agreement that the insurance requirements have been met or that coverages or policies are in compliance. Furthermore, receipt, acceptance, and/or approval of certificates or other documentation of insurance or policies or copies of policies by the City, or by any of its employees, representatives, agents, etc., which indicate less coverage than required does not constitute a waiver of Firm's obligation to fulfill these insurance requirements.

MINIMUM SCOPE AND LIMIT OF INSURANCE [1]

A. Commercial General Liability (CGL) Insurance on the most current Insurance Services Office (ISO) Form CG 00 01 or its equivalent on an "occurrence" basis (Modified Occurrence or Claims Made forms are not acceptable without prior written consent of the City). Coverage must be provided to cover liability contemplated by the Agreement including without limitation premises and operations, independent contractors, contractual liability, products and completed operations, property damage, bodily, personal and advertising injury, contractual liability, explosion, collapse, underground coverages, personal injury liability, death, employees-as-insureds. Products and completed operations liability coverage maintained for at least 3 years after completion of work. Limits shall not be less than $1M per occurrence and $2M general aggregate for Agreements valued at $2M or less; if valued over $2M, a general aggregate limit that equals or exceeds the Agreement's value. If a general aggregate limit applies, it shall apply separately to the project/location (ISO CG 25 03 or 25 04 or equivalent). **(ALWAYS APPLICABLE)**

B. Automobile Liability (AL) Insurance in accordance with Florida law, as to the ownership, maintenance, and use of all owned, non-owned, leased, or hired vehicles. AL insurance shall not be less than: (a) $500,000 combined single limit each occurrence bodily injury and property damage for Agreements valued at $100,000 or less or (b) $1M combined single limit each occurrence bodily injury and property damage for Agreements valued over $100,000. If transportation of hazardous material involved, the MCS-90 endorsement (or equivalent). **(ALWAYS APPLICABLE)**

C. Worker's Compensation (WC) & Employer's Liability Insurance for all employees engaged under the Agreement, Worker's Compensation as required by Florida law. Employer's Liability with minimum limits of (a) $500,000 bodily injury by accident and each accident, bodily injury by disease policy limit, and bodily injury by disease each employee for Agreements valued at $100,000 and under or (b) $1M bodily injury by accident and each accident, bodily injury by disease policy limit, and bodily injury by disease each for all other Agreements. **(ALWAYS APPLICABLE)**

D. Excess (Umbrella) Liability Insurance for Agreements valued at $2M or more, at least $4M per occurrence in excess of underlying limits and no more restrictive than underlying coverage for all work performed by Firm. May also compensate for a deficiency in CGL, AL, or WC. **(ALWAYS APPLICABLE)**

E. Builder's Risk Insurance for property loss exposure associated with construction/renovation/additions to buildings or structures, including materials or fixtures to be incorporated. Must be "All Risk" form with limits of no less than the project's completed value, have no coinsurance penalties, eliminate the "occupancy clause", cover Firm (together with its contractors, subcontractors of every tier, and suppliers), and name City as a Loss Payee. **(IF APPLICABLE)**

F. Installation Floater coverage for property (usually highly valued equipment or materials such as compressors, generators, etc.) during its installation. Coverage must be "All Risk" including installation and transit for no less than 100% of the installed replacement cost value. **(IF APPLICABLE)**

G. Architects & Engineers Liability/ Professional Liability (E&O)/ Contractors Professional Liability (CPrL)/ Medical Malpractice Insurance where Agreement involves Florida-regulated professional services (e.g. architect, engineer, design-builder, CM, accountant, appraiser, investment banker medical professional) at any tier, whether employed or independent, vicarious design liability exposure (e.g. construction means & methods, design supervision), value engineering, constructability assessments/reviews, BIM process, and/or performance specifications. Limits of at least $1M per occurrence and $2M aggregate; deletion of design/ build liability exclusions, as applicable, and maintained for at least 3 years after completion of work/services and City's acceptance of same. **(IF APPLICABLE)**

H. Railroad Protective Liability (RPL) Insurance for construction within 50ft of operated railroad track(s) or where affects any railroad bridge, trestle, tunnel, track(s) roadbed, or over/under pass. Subject to involved rail road's approval prior to commencement of work. **(IF APPLICABLE).**

I. Pollution and/or Asbestos Legal Liability Insurance where Agreement involves asbestos and/or environmental hazards/contamination risks (defined broadly, e.g. lead, mold, bacteria, fuel storage, underground work, cleanup (owned or non-owned sites),pollutant generation/transportation, marine/natural resource damage, contamination claim, restitution, business interruption, mold, fungus, lead-based paint, 3rd party claims/removal, etc.), with limits of at least $1M per occurrence and $2M aggregate, maintained for at least 3 years after Agreement completion. **(IF APPLICABLE)**

J. Cyber Liability Insurance where Agreement involves portals allowing access to obtain, use, or store data; managed dedicated servers; cloud hosting services; software/hardware; programming; and/or other IT services

[1] "M" indicates million(s), for example $1M is $1,000,000

Document updated and approved by Legal and Risk Management as of 08/16/2016

and products are involved. Limits of not less than $2M per occurrence and $2M aggregate. Coverage sufficiently broad to respond to duties and obligations undertaken by Firm, and shall include, but not be limited to, claims involving infringement of intellectual property/copyright, trademark, trade dress, invasion of privacy violations, damage to or destruction of electronic information, information theft, release of confidential and/or private information, alteration of electronic information, extortion, virus transmission, and network security. Coverage, as applicable and with sufficient limits to respond, for breach response costs, regulatory fines and penalties, credit monitoring expenses. **(IF APPLICABLE)**

K. Drone/UAV Liability Insurance where Agreements involves unmanned aerial vehicles/drones. Coverage to include products and completed operations, property damage, bodily injury with limits no less than $1M per occurrence, and $2M aggregate; may be provided by CGL endorsement subject to City's prior written approval. **(IF APPLICABLE)**

L. Longshore & Harbor Workers' Compensation Act/Jones Act for work being conducted near, above, or on "navigable waters" for not less than the above Employer's Liability Insurance limit. **(IF APPLICABLE)**

M. Garagekeeper/Hangerkeeper/Marina Operator Legal Liability Insurance and/or Hull/P&I Insurance where parking lot, valet, dealership, garage services, towing, etc. and/or operation of a hangar, marina, or air plane/ship repairer, providing safe berth, air/watercraft storage/docking (on land/ in water), fueling, tours, charters, ferries, dredges, tugs, mooring, towing, boat/aircraft equipment/repair/alteration/maintenance, etc.; coverage against liability for damage to vehicles air/watercraft, their machinery in Firm's care, custody, or control both private & commercial. Limits at least equal to greater of $1M, value of max number of vehicles that may be in Firm's custody, or of most costly object in Firm's custody. **(IF APPLICABLE)**

N. Property Insurance and Interruption of Business (IOB) Insurance where premises, building, structure, or improved real property is leased, licensed, or otherwise occupied by Firm. Property Insurance against all risks of loss to any occupant/tenant improvements at full replacement cost with no coinsurance penalty, including fire, water, leak damage, and flood, as applicable, vandalism and malicious mischief endorsements. IOB by which minimum monthly rent will be paid to City for up to 1 year if premises are destroyed, rendered inaccessible or untenantable, including disruption of utilities, water, or telecommunications. **(IF APPLICABLE)**

O. Liquor Liability/Host Liquor Liability where Firm directly or indirectly provides alcoholic beverages, limits of at least $1M per occurrence and $1M aggregate. **(IF APPLICABLE)**

P. Educators Legal Liability Insurance where day care, after school program, recreational activities, etc. limits per G above. **(IF APPLICABLE)**

ADDITIONAL REQUIREMENTS

ACCEPTABILITY OF INSURERS - Insurance is to be placed with insurers admitted in the State of Florida and who have a current A.M. Best rating of no less than **A-:VII** or, if not rated by A.M. Best, as otherwise approved by the City in advance and in writing.

ADDITIONAL INSURED - **City, its elected officials, departments, officers, officials, employees, and volunteers together with, as applicable, any associated lender of the City shall be covered as additional insureds on all liability coverage** (e.g. CGL, AL, and Excess (Umbrella) Liability) as to liability arising out of work or operations performed by or on behalf of Firm including materials, parts, or equipment furnished in connection with such work or operations and automobiles owned, leased, hired, or borrowed by or on behalf of Firm. Coverage can be provided in the form of an endorsement to Firm's insurance (at least as broad as ISO Form CG 20 10 11 85 or **both** CG 10 20, CG 20 26, CG 20 33, or CG 20 38 **and** CG 20 37 if later revisions used).

CANCELLATION/NON-RENEWAL – Each insurance policy shall provide that at least 30 days written notice must be given to City of any cancellation, intent to non-renew, or material reduction in coverage (except aggregate liability limits) and at least 10 days' notice for non-payment of premium. Firm shall also have an independent duty to notify City in like manner, within 5 business days of Firm's receipt from its insurer of any notices of same. If any policy's aggregate limit is reduced, Firm shall directly take steps to have it reinstated. Notice and proof of renewal/continued coverage/certifications, etc. shall be sent to the City's notice (or Award contact) address as stated in the Agreement with a copy to the following:

☒ Contract Administration Department, 306 E Jackson St, Tampa, FL 33602 ☐ Purchasing Department, 306 E Jackson Street, Tampa, FL 33602

☐ Other: _____

CERTIFICATE OF INSURANCE (COI) – to be provided to City by insurance carrier prior to Firm beginning any work/services or taking occupancy and, if the insurance expires prior to completion of the work or services or Agreement term (as may be extended), a renewal COI at least 30 days before expiration to the above address(es). COIs shall specifically identify the Agreement and its subject (project, lease, etc.), shall be sufficiently comprehensive to insure City (named as additional insured) and Firm and to certify that coverage extends to subcontractors' acts or omissions, and as to permit the City to determine the required coverages are in place without the responsibility of examining individual policies. **Certificate Holder must be The City of Tampa, Florida.**

CLAIMS MADE – If any liability insurance is issued on a claims made form, Firm agrees to maintain such coverage uninterrupted for at least 3 years following completion and acceptance of the work either through purchase of an extended reporting provision or purchase of successive renewals. The Retroactive Date must be shown and be a date not later than the earlier of the Agreement date or the date performance/occupancy began thereunder.

DEDUCTIBLES/ SELF-INSURED RETENTIONS (SIR) – must be disclosed to City and, if over $500,000, approved by the City in advance and in writing, including at City's option being guaranteed, reduced, or eliminated (additionally if a SIR provides a financial guarantee guaranteeing payment of losses and related investigations, claim administration, and defense expenses). Firm shall be fully responsible for any deductible or SIR (without limiting the foregoing a policy with a SIR shall provide or be endorsed to provide that the SIR may be satisfied by either the City or named insured). In the event of loss which would have been covered but for a deductible or SIR, City may withhold from any payment due Firm, under any agreement with the City, an amount equal to same to cover such loss should full recovery not be obtained under the policy.

PERFORMANCE – All insurance policies shall be fully performable in Hillsborough County, Florida (the County), and construed in accordance with Florida law. Further, all insurance policies must expressly state that the insurance company will accept service of process in the County and that the exclusive venue for any action concerning any matter under those policies shall be in the appropriate state court of the County.

PRIMARY POLICIES - Firm's insurance coverage shall be primary insurance coverage at least as broad as ISO CG 20 01 04 13 as to the City, its elected officials, departments, officers, employees, and volunteers. Any insurance or self-insurance maintained by the City, its elected officials, departments, officers, employees, and volunteers shall be excess of the Firm's insurance and shall not contribute with it.

SUBCONTRACTORS/INDEPENDENT ASSOCIATES/CONSULTANTS/SUBTENANTS/SUBLICENSEE – **Firm shall require and verify that all such entities maintain insurance meeting all requirements stated herein with the City as an additional insured** by endorsement (ISO FORM CG 20 38, or broader) or otherwise include such entities within Firm's insurance policies. Upon City's request, Firm shall furnish complete and certified copies of copies of such entities' insurance policies, forms, and endorsements.

SUBCONTRACTOR DEFAULT INSURANCE, CONTROLLED INSURANCE PROGRAM, WRAP-UP. Use requires express prior written consent of City Risk Manager.

UNAVAILABILITY – To the fullest extent permitted by law, if Firm is out of business or otherwise unavailable at the time a claim is presented to City, Firm hereby assigns to the City all of its right, title and interest (but not any liabilities or obligations) under any applicable policies of insurance.

WAIVER OF SUBROGATION – With regard to any policy of insurance that would pay third party losses, Firm hereby grants City a waiver of any right to subrogation which any insurer of Firm may acquire against the City by virtue of the payment of any loss under such insurance. Firm agrees to obtain any endorsement that may be necessary to affect such waiver, but this provision shall apply to such policies regardless.

WAIVER/RELEASE AGREEMENT – Where Firm has a defined group of persons who might be exposed to harm (e.g. participants in an athletic event/program, volunteers) any waiver or release agreement used by Firm whereby such persons (and their parent/guardian as applicable) discharge Firm from claims and liabilities, shall include the City, its elected officials, departments, officers, officials, employees, and volunteers to the same extent as Firm.

Document updated and approved by Legal and Risk Management as of 08/16/2016

Subcontract Goal Contact List: SLBEs and Underutilized WMBEs
(**The Underutilized WMBE Industry Category for Subcontracts is Construction - BBE Certified)

Project 17-C-00006 (West River Interceptor Cleaning)

#'s	Business Name	Phone	Fax	Email	Address 1	City	State	Zip	Business Description	FEIN	Certification Type	Expiration Date
1	**Cordova Transport Inc**	813-284-6953	813-284-6952	cordovatransport@aol.com	7402 N 56th Street	Tampa	FL	33617	TRANSPORTATION/ HAULING	272503834	SLBE	1/30/2017
2	**Jansay Trucking, LLC**	813-300-1846	813-885-4214	jansayTrucking@gmail.com	4542 W. Minnehaha St	Tampa	FL	33614	Trucking	472179144	SLBE	3/14/2018
3	**ODESSA TRUCKING INC**	813-918-1715	813-920-8673	odessatrucking@msn.com	18136 GUNN HWY	ODESSA	FL	33556	TRUCKING	593334628	SLBE	6/15/2018
4	**OGONZALEZ TRUCKING INC**	813-961-8158	813-961-8158	SOGARA4@VERIZON.NET	4108 DELLBROOK DR	TAMPA	FL	33624	TRI AXLE DUMP TRUCK HAULING AGGREGATES SAND ASPHALT DEBRIS	202502525	SLBE	2/11/2017
5	**Ortzak Construction Group, LLC**	813-961-6023	813-961-6023	dcastro@ortzak.com	13014 N. Dale Mabry Hwy, Suite 623	Tampa	FL	33618	Hauling; Landscaping and Fencing Services;	454837502	SLBE	7/9/2017
6	**PAR Development Partners, Inc.**	813-374-2856	866-594-2505	ydwilson@aol.com	2109 E Palm Ave, Suite 312	Tampa	FL	33612	Hauling; Land Cleaning;	205657414	**SLBE/BBE**	4/24/2017
7	**Sabrina's Trucking, LLC**	813-629-7210	813-986-1124	jtrucker151@aol.com	P.O. Box 992	Mango	FL	33550	Hauling and Trucking;	204083765	**SLBE/BBE**	9/6/2018
8	**Suarez Grading Enterprises, Inc.**	813-663-9037	813-620-4158	l.suarez@suarezgrading.com	8830 Turnstone Shore Ln	Riverview	FL	33578	Trucking, Site Work, Excavating Services;	841681751	SLBE	7/6/2017

African American/Black Business Enterprises (BBE) may count toward the subcontract goal. Refer to MBD Form 70-Procurement Guidelines

Report Date: December 2, 2016

Subcontract Goal Contact List: SLBEs and Underutilized WMBEs
(**The Underutilized WMBE Industry Category for Subcontracts is Construction - BBE Certified)

Project 17-C-00006 (West River Interceptor Cleaning)

#'s	Business Name	Phone	Fax	Email	Address 1	City	State	Zip	Business Description	FEIN	Certification Type	Expiration Date
9	**SUAREZ HAULING INC**	813-420-7557	813-420-7557	MIGDY.SUAREZ@YAHOO.COM	3529 FOXWOOD BLVD	WESLEY CHAPEL	FL	33543	Hauling	462001438	SLBE	9/16/2017
10	**TULIPAN TRUCKING LLC**	786-768-0925		ycamachoallied@aol.com	4051 Benson Avenue North	St. Peterburg	FL	33713	TRANSPORTATION OF MATERIALS & DISTRUCTION OF ASPHALT	461844694	SLBE	8/28/2017

African American/Black Business Enterprises (BBE) may count toward the subcontract goal. Refer to MBD Form 70-Procurement Guidelines

Report Date: December 2, 2016

Instructions Regarding Use of the SLBE Goal Contact List

Bidders must solicit a subcontracting bid from ALL of the firms listed on the SLBEs list provided within the Specifications, and provide documentation of emails, faxes, phone calls, letters, or other communication with the firms as a first step in demonstrating Good-Faith Efforts to achieve the goal set for SLBE participation on this contract.

The list is formatted to facilitate e-mailing of a solicitation to the listed firms by copying and pasting the email addresses.

The SLBE participation Goal is based upon the availability of the certified firms indicated on the contact list. The Goal and Requirements of the City's Equal Business Opportunity Program are stated in the Bid/Contract Document, Specifications.

SOLICITATION FOR SUBCONTRACTOR QUOTES

From:
OUR COMPANY NAME:
TELEPHONE NUMBER:
ADDRESS:
FAX NUMBER:
E-MAIL ADDRESS:

To Subcontractor:

Our firm is in the process of preparing a bid for a **City of Tampa Contract**. Please accept this notice as our request for quotes for the scope of work identified below. Please respond to this request by filling in the information below and returning via e-mail or fax to the address or number provided. Please contact us if you need any assistance in obtaining bonding, lines of credit, insurance, assistance in obtaining necessary equipment, supplies, materials, participation in a City-sponsored mentor-protégé program, or if you have any questions.

Plans and Specs for this project are posted at:
http://www.tampagov.net/dept_contract_administration/programs_and_services/construction_project_bidding/

CONTRACT NO.:
CONTRACT NAME:
CITY'S BID OPENING DATE:
DEADLINE FOR YOUR SUBCONTRACTOR BID OR RESPONSE:
SPECIFIC SCOPE OF WORK:

Please complete and submit with your subcontract bid or response:
YOUR FIRM'S NAME:
MAILING ADDRESS:
CITY:
STATE:
ZIP:
FAX NUMBER:
E-MAIL ADDRESS:
__Yes, my company is interested in quoting this project for the following items of work:

__No, my company will not quote this project for the following reason(s):

(Sample Suggested Sub Solicitation 3-9-9 Tampa MBDO)

PROPOSAL

To the Mayor and City Council of the City of Tampa, Florida:

Legal Name of Bidder: _____

Bidder's Fictitious Name*, if applicable*: _____

Bidder is a/an: ☐ Individual ☐ Partnership* ☐ Joint Venture* ☐ LLC ☐ Corp. ☐ Other:

Bidder is organized under the laws of: ☐ State of Florida ☐ Other:

Bidder Mailing Address: _____

Bidder's Federal Employee Identification No. (FEI/EIN): _____

Bidder's License No.:_____ Bidder's FDOS (SUNBIZ) Doc. No.*:* _____

(See Ch. 489. FS; use entity's, individual's only if applicable)

Bidder Contact Name**: _____ Email:_____ Phone: (_____) _____

Bidder's own initial application for employment has criminal history screening practices similar in nature to the practices contained in Chapter 12, Article VI, City of Tampa Code *(Responses, whether "Yes" or "No", are for informational purposes only and will not be used as a basis of award or denial, nor as a basis for any protest)*: ☐Yes ☐No

The below named person, appearing before the undersigned authority and after being first duly sworn, for him/herself and on behalf of the entity submitting this Proposal does hereby affirm and declare as follows:

(1) He/She is of lawful age and is authorized to act on behalf of Bidder (the individual, partnership, corporation, entity, etc. submitting this Proposal) and that all statements made in this document are true and correct to the best of my knowledge.

(2) If Bidder is operating under a fictitious name, Bidder has currently complied with any and all laws and procedures governing the operation of businesses under fictitious names in the State of Florida

(3) No person or entity other than Bidder has any interest in this Proposal or in the Contract proposed to be entered into.

(4) This Proposal is made without any understanding, agreement, or connection with any person or entity making Proposal for the same purposes, and is in all respects fair and without collusion or fraud.

(5) Bidder is not in arrears to the City of Tampa, upon debt or contract, and is not a defaulter, as surety or otherwise, upon any obligation to the City of Tampa.

(6) That no officer or employee or person whose salary is payable in whole or in part from the City Treasury is, shall be or become interested, directly or indirectly, as a contracting party, partner, stockholder, surety or otherwise, in this Proposal, or in the performance of the Contract, or in the supplies, materials, or equipment and work or labor to which it relates, or in any portion of the profits thereof.

(7) Bidder has carefully examined and fully understands the Solicitation and has full knowledge of the scope, nature, and quality of the work to be performed; furthermore, Bidder has carefully examined the site of the work and that, from his own investigations, he has satisfied himself as to the nature and location of the work, the character, quality, and quantity of materials and the kinds and extent of equipment and other facilities needed for the performance of the work, the general and local conditions and all difficulties to be encountered, and all other items which may, in any way, affect the work or its performance.

(8) Bidder (including its principals) ☐ has | ☐ has NOT been debarred or suspended from contracting with a public entity.

(9) Bidder ☐ has | ☐ has NOT implemented a drug-free workplace program that meets the requirements of Section 287.087, Florida Statutes.

(10) Bidder has carefully examined and fully understands all the component parts of the Contract Documents and agrees Bidder will execute the Contract, provide the required Public Construction Bond, and will fully perform the work in strict accordance with the terms of the Contract and Contract Documents therein referred to for the following prices, to wit:

* If a Partnership or Joint Venture, attach Partnership or Joint Venture Agreement.

** Someone the City may contact with questions/correspondence regarding this Solicitation and/or permits.

Item No.	Description	Unit	Approx. Quantity	Unit Price in Words		Unit Price		Total Computed Price
100	Contingency	LS	1	One Hundred Thousand and No Cents	$	100,000.00	$	100,000.00
0601.60	Cleaning and Removal of Debris for 60" Diameter Pipe (maximum of 1500 TON of debris) - Phase I	LF	6,800		$		$	
0601.20	Cleaning and Removal of Debris for 20" Diameter Pipe (maximum of 40 TON of debris) - Phase I	LF	370		$		$	
0601.36	Cleaning and Removal of Debris for 36" Diameter Pipe (maximum of 120 TON of debris) - Phase I	LF	740		$		$	
0601.60	Cleaning and Removal of Debris for 60" Diameter Pipe (maximum of 1750 TON of debris) - Phase II	LF	7,900		$		$	
0601.48	Cleaning and Removal of Debris for 48" Diameter Pipe (maximum of 70 TON of debris) - Phase II	LF	350		$		$	
0650	Disposal of Debris	TON	3,500		$		$	
9600	Sewer Line Sonar and CCTV Inspection	LF	16,160		$		$	
9999	Maintenance of Traffic	LS	1		$		$	
						TOTAL BID	$	

Computed Total Price in Words: _____

_____dollars and _____ cents.

Computed Total Price in Figures: $_____

Bidder acknowledges that the following addenda have been received and that the changes covered by the addendum(s) have been taken into account in this proposal: #1 ____ #2 ____ #3 ____ #4 ____ #5 ____ #6 ____ #7 ____ #8 ____.

Bidder acknowledges the requirements of the City of Tampa's Equal Business Opportunity Program.

Bidder acknowledges that it is aware of Florida's Trench Safety Act (Sections 553.60-553.64, Florida Statutes), and agrees that Bidder together with any involved subcontractors will comply with all applicable trench safety standards. Bidder further acknowledges that included in the various items of this Proposal and the total bid price (as applicable) are costs for complying with the Trench Safety Act. Bidder further identifies the costs and methods summarized below:

	Trench Safety Measure (Description)	Unit of Measure (LF, SY)	Unit Quantity	Unit Cost	Extended Cost
A.					
B.					
C.					

Total Cost: $ _____

Accompanying this Proposal is a certified check, cashier's check or Tampa Bid Bond (form included herein must be used) for at least five percent (5%) of the total amount of the Proposal which check shall become the property of the City, or which bond shall become forthwith due and payable to the City, if this Proposal shall be accepted by the City and the Bidder shall fail to enter into a legally binding contract with and to furnish the required Public Construction Bond to the City within twenty (20) days after the date of its receipt of written Notice of Award by the City so to do.

FAILURE TO COMPLETE THE ABOVE MAY RESULT IN THE PROPOSAL BEING DECLARED NON-RESPONSIVE.

[SEAL]

Name of Bidder:_____

Authorized Signature:_____

Signer's Printed Name:_____

Signer's Title: _____

STATE OF _____

COUNTY OF _____

For an entity: The forgoing instrument was sworn (or affirmed) before me this ____ day of _____, 20____ by _____ as _____ of _____, a/n □ Partnership □ Joint Venture □ LLC □ Corp □ Other:_____, on behalf of such entity. Such individual is □ personally known to me or □ produced a/n _____ state driver's license as identification.

For an individual: The forgoing instrument was sworn (or affirmed) before me this ____ day of _____, 20____ by _____, who is □ personally known to me or □ produced a/n _____ state driver's license as identification.

[NOTARY SEAL]

_____

Notary Public, State of _____

Notary Printed Name: _____

Commission No.: _____

My Commission Expires: _____

Good Faith Effort Compliance Plan Guidelines

for Women/Minority Business Enterprise\Small Local Business Enterprise Participation
City of Tampa - Equal Business Opportunity Program
(MBD Form 50 – detailed instructions on page 2 of 2)

Contract Name_____ Bid Date _____

Bidder/Proposer_____

Signature _____ Date _____

Name _____ Title _____

The Compliance Plan with attachments is a true account of Good Faith Efforts (GFE) made to achieve the participation goals as specified for Women/Minority Business Enterprises/Small Local Business Enterprises (WMBE/SLBE) on the referenced contract:

□ The WMBE/SLBE participation Goal is Met or Exceeded. See DMI Forms 10 and 20 which accurately report all subcontractors solicited and all subcontractors to-be-utilized.

□ The WMBE/SLBE participation Goal is Not Achieved. The following list is an overview of the baseline GFE action steps already performed. Furthermore, it is understood that these GFE requirements are weighted in the compliance evaluation based on the veracity and demonstrable degree of documentation provided with the bid/proposal:

(Check applicable boxes below. Must enclose supporting documents accordingly with remarks)

(1) Solicited through reasonable and available means the interest of WMBE/SLBEs that have the capability to perform the work of the contract. The Bidder or Proposer must solicit this interest within sufficient time to allow the WMBE/SLBEs to respond. The Bidder or Proposer must take appropriate steps to follow up initial solicitations with interested WMBE/SLBEs. □ See DMI report forms for subcontractors solicited. □ See enclosed supplemental data on solicitation efforts. □ Qualifying Remarks:

(2) Provided interested WMBE/SLBEs with adequate, specific scope information about the plans, specifications, and requirements of the contract, including addenda, in a timely manner to assist them in responding to the requested-scope identified by bidder/proposer for the solicitation. □ See enclosed actual solicitations used. □ Qualifying Remarks:

(3) Negotiated in good faith with interested WMBE/SLBEs that have submitted bids (e.g. adjusted quantities or scale). Documentation of negotiation must include the names, addresses, and telephone numbers of WMBE/SLBEs that were solicited; the date of each such solicitation; a description of the information provided regarding the plans and specifications for the work selected for subcontracting; and evidence as to why agreements could not be reached with WMBE/SLBEs to perform the work. Additional costs involved in soliciting and using subcontractors is not a sufficient reason for a bidder/proposer's failure to meet goals or achieve participation, as long as such costs are reasonable. Bidders are not required to accept excessive quotes in order to meet the goal.
□ DMI Utilized Forms for sub-(contractor/consultant) reflect genuine negotiations □ This project is an RFQ/RFP in nature and negotiations are limited to clarifications of scope/specifications and qualifications. □ See enclosed documentation. □ Qualifying Remarks:

(4) Not rejecting WMBE/SLBEs as being unqualified without justification based on a thorough investigation of their capabilities. The WMBE/SLBEs standing within its industry, membership in specific groups, organizations / associations and political or social affiliations are not legitimate causes for rejecting or not soliciting bids to meet the goals.
□ Not applicable. □ See attached justification for rejection of a subcontractor's bid or proposal. □ Qualifying Remarks:

(5) Made scope(s) of work available to WMBE/SLBE subcontractors and suppliers; and, segmented portions of the work or material consistent with the available WMBE/SLBE subcontractors and suppliers, so as to facilitate meeting the goal. □ Sub-Contractors were allowed to bid on their own choice of work or trade without restriction to a pre-determined portion. □ See enclosed comments. □ Qualifying Remarks:

(6) Made good faith efforts, despite the ability or desire of Bidder/Proposer to perform the work of a contract with its own forces/organization. A Bidder/Proposer who desires to self-perform the work of a contract must demonstrate good faith efforts if the goal has not been met. □ Sub-Contractors were not prohibited from submitting bids/proposals and were solicited on work typically self-performed by the prime. □ Qualifying Remarks:

(7) Segmented portions of the work to be performed by WMBE/SLBEs in order to increase the likelihood that the goals will be met. This includes, where appropriate, breaking out contract work items into economically feasible units (quantities/scale) to facilitate WMBE/SLBE participation, even when the Bidder/Proposer might otherwise prefer to perform these work items with its own forces. □ Sub-Contractors were allowed to bid on their own choice of work or trade without restriction to a pre-determined portion. □ Sub-Contractors were not prohibited from submitting bids/proposals and were solicited on work typically self-performed by the prime. □ See enclosed comments. □ Qualifying Remarks:

(8) Made efforts to assist interested WMBE/SLBEs in obtaining bonding, lines of credit, or insurance as required by the city or contractor.
□ See enclosed documentation on initiatives undertaken and methods to accomplish. □ Qualifying Remarks:

(9) Made efforts to assist interested WMBE/SLBEs in obtaining necessary equipment, supplies, materials, or related assistance or services, including participation in an acceptable mentor-protégé program. □ See enclosed documentation of initiatives and/or agreements. □ Qualifying Remarks:

(10) Effectively used the services of the City and other organizations that provide assistance in the recruitment and placement of WMBE/SLBEs.
□ See enclosed documentation. □ The following services were used:

Note: Provide any unsolicited information that will support the Bid/RFP Compliance Evaluation. □ Named Documents Are:

Participation Plan: Guidance for Complying with Good Faith Efforts Outreach

(page 2 of 2)

1. All firms on the WMBE/SLBE Goal Setting List must be solicited and documentation provided for email, fax, letters, phone calls, and other methods of outreach/communication with the listed firms. The DMI Solicited and DMI-Utilized forms must be completed for all firms solicited or utilized. Other opportunities for subcontracting may be explored by consulting the City of Tampa MBD Office and/or researching the on-line Diversity Management Business System Directory for Tampa certified WMBE/SLBE firms.

2. Solicitation of WMBE/SLBEs, via written or electronic notification, should provide specific information on the services needed, where plans can be reviewed and assistance offered in obtaining these, if required. Solicitations should be sent a minimum of a week (i.e. 5 business days or more) before the bid/proposal date. Actual copies of the bidder's solicitation containing their scope specific instructions should be provided.

3. With any quotes received, a follow-up should be made when needed to confirm detail scope of work. For any WMBE/SLBE low quotes rejected, an explanation Shall be provided detailing negotiation efforts.

4. If a low bid WMBE/SLBE is rejected or deemed unqualified the contractor must provide an explanation and supporting documentation for this decision.

5. Prime Shall break down portions of work into economical feasible opportunities for subcontracting. The WMBE/SLBE directory may be useful in identifying additional subcontracting opportunities and firms not listed in the "WMBE/SLBE Goal Setting Firms List."

6. Contractor Shall not preclude WMBE/SLBEs from bidding on any part of work, even if the Contractor may desire to self-perform the work.

7. Contractor Shall avoid relying solely on subcontracting out work-scope where WMBE/SLBE availability is not sufficient to attain the pre-determined subcontract goal set for the Bid or when targeted sub-consultant participation is stated within the RFP/RFQ.

8. In its solicitations, the Bidder should offer assistance to WMBE/SLBEs in obtaining bonding, insurance, et cetera, if required of subcontractors by the City or Prime Contractor.

9. In its solicitation, the Bidder should offer assistance in obtaining equipment for a specific job to WMBE/SLBEs, if needed.

10. Contractor should use the services offered by such agencies as the City of Tampa Minority and Small Business Development Office, Hillsborough County Entrepreneur Collaborative Center, Hillsborough County Economic Development Department's MBE/SBE Program and the NAACP Empowerment Center to name a few for the recruitment and placement of WMBEs/SLBEs.

Failure to Complete, Sign and Submit Both Forms 10 & 20 SHALL render the Bid or Proposal Non-Responsive

Page 1 of 4 – DMI Solicited/Utilized Schedules
City of Tampa – Schedule of All Solicited Sub-(Contractors/Consultants/Suppliers)
(FORM MBD-10)

Contract No.:_____ Contract Name:_____
Company Name:_____ Address:_____
Federal ID:_____ Phone:_____ Fax:_____ Email:_____

Check applicable box(es). Detailed Instructions for completing this form are on page 2 of 4.
[ ] No Firms were contacted or solicited for this contract.
[ ] No Firms were contacted because:_____
[ ] See attached list of additional Firms solicited and all supplemental information (List must comply to this form)
Note: Form MBD-10 must list ALL subcontractors solicited including Non-minority/small businesses

NIGP Code Categories: Buildings = 909, General = 912, Heavy = 913, Trades = 914, Architects = 906, Engineers & Surveyors = 925, Supplier = 912-77

S = SLBE W=WMBE O = Neither Federal ID	Company Name Address Phone, Fax, Email	Type of Ownership (F=Female M=Male) BF BM = African Am. HF HM = Hispanic AF AM = Asian Am. NF NM = Native Am. CF CM = Caucasian	Trade or Services NIGP Code (listed above)	Contact Method L=Letter F=Fax E=Email P=Phone	Quote or Response Received Y/N

Failure to Complete, Sign and Submit this form with your Bid or Proposal Shall render the Bid Non-Responsive (Do Not Modify This Form)

It is hereby certified that the information provided is an accurate and true account of contacts and solicitations for sub–contracting opportunities on this contract.

Signed:_____ Name/Title:_____ Date:_____

Failure to Complete, Sign and Submit Both Forms 10 & 20 SHALL render the Bid or Proposal Non-Responsive
Forms must be included with Bid / Proposal

Instructions for completing The Sub-(Contractors/Consultants/ Suppliers) Solicited Form (Form MBD-10)

This form must be submitted with all bids or proposals. **All** subcontractors (regardless of ownership or size) solicited and subcontractors from whom unsolicited quotations were received must be included on this form. The instructions that follow correspond to the headings on the form required to be completed. Note: Ability or desire to self-perform all work shall not exempt the prime from Good Faith Efforts to achieve participation.

- **Contract No.** This is the number assigned by the City of Tampa for the bid or proposal.
- **Contract Name.** This is the name of the contract assigned by the City of Tampa for the bid or proposal.
- **Contractor Name.** The name of your business and/or doing business as (dba) if applicable.
- **Address.** The physical address of your business.
- **Federal ID.** FIN. A number assigned to your business for tax reporting purposes.
- **Phone.** Telephone number to contact business.
- **Fax.** Fax number for business.
- **Email.** Provide email address for electronic correspondence.
- **No Firms were contacted or solicited for this contract.** Checking the box indicates that a pre-determined Subcontract Goal or Participation Plan Requirement was not set by the City resulting in your business not using subcontractors and will self-perform all work. If during the performance of the contract you employ subcontractors, the City must pre-approve subcontractors. Use of the "Sub-(Contractors/Consultants/Suppliers) Payments" form (MBD Form-30) must be submitted with every pay application and invoice. Note: Certified SLBE or WMBE firms bidding as Primes are not exempt from outreach and solicitation of subcontractors.
- **No Firms were contacted because.** Provide brief explanation why no firms were contacted or solicited.
- **See attached documents.** Check box, if after you have completed the DMI Form in its entirety, you need more space to list additional firms and/or if you have supplemental information/documentation relating to the form. All DMI data not submitted on the MBD Form-10 must be in the same format and have all requested data from MBD Form-10 included.

The following instructions are for information of any and all subcontractors solicited.

- **"S" = SLBE, "W" = WMBE.** Enter "**S**" for firms Certified by the City as Small Local Business Enterprises and/or "**W**" for firms Certified by the City as either Women/Minority Business Enterprise; **"O" = Non-certified others**.
- **Federal ID.** FIN. A number assigned to a business for tax reporting purposes. This information is critical in proper identification and payment of the contractor/subcontractor.
- **Company Name, Address, Phone & Fax**. Provide company information for verification of payments.
- **Type of Ownership.** Indicate the Ethnicity and Gender of the owner of the subcontracting business.
- **Trade, Services, or Materials** indicate the trade, service, or materials provided by the subcontractor. NIGP codes aka "National Institute of Governmental Purchasing" are listed at top section of document.
- **Contact Method L=letter, F=fax, E=Email, P=Phone.** Indicate with letter the method(s) of soliciting for bid.
- **Quote or Resp. (response) Rec'd (received) Y/N**. Indicate "Y" Yes if you received a quotation or if you received a response to your solicitation. Indicate "N" No if you received no response to your solicitation from the subcontractor. Must keep records: log, ledger, documentation, etc. that can validate/verify.

If additional information is required or you have questions, please contact the Equal Business Opportunity Program - Minority and Small Business Development Office at (813) 274-5522.

Failure to Complete, Sign and Submit Both Forms 10 & 20 SHALL render the Bid or Proposal Non-Responsive

City of Tampa – Schedule of All To-Be-Utilized Sub-(Contractors/Consultants/Suppliers)

(FORM MBD-20)

Contract No.:_____ Contract Name:_____
Company Name:_____Address:_____
Federal ID:_____ Phone:_____ Fax:_____ Email:_____

Check applicable box(es). Detailed Instructions for completing this form are on page 4 of 4.

[ ] See attached list of additional Firms Utilized and all supplemental information (List must comply to this form)
Note: Form MBD-20 must list ALL subcontractors To-Be-Utilized including Non-minority/small businesses

[ ] No Subcontracting/consulting (of any kind) will be performed on this contract.

[ ] No Firms are listed to be utilized because:_____

NIGP Code General Categories: Buildings = 909, General = 912, Heavy = 913, Trades = 914, Architects = 906, Engineers & Surveyors = 925, Supplier = 912-77

Enter "S" for firms Certified as Small Local Business Enterprises, "W" for firms Certified as Women/Minority Business Enterprise, "O" for Other Non-Certified

S = SLBE W=WMBE O =Neither Federal ID	Company Name Address Phone, Fax, Email	Type of Ownership (F=Female M=Male) BF BM = African Am. HF HM = Hispanic Am. AF AM = Asian Am. NF NM = Native Am. CF CM = Caucasian	Trade, Services, or Materials NIGP Code Listed above	$ Amount of Quote. Letter of Intent (LOI) if available	Percent of Scope or Contract %

Failure to Complete, Sign and Submit this form with your Bid or Proposal Shall render the Bid Non-Responsive. (Do Not Modify This Form)

Total ALL Subcontract / Supplier Utilization $_____
Total SLBE Utilization $ _____
Total WMBE Utilization $ _____
Percent SLBE Utilization of Total Bid/Proposal Amt. _____% Percent WMBE Utilization of Total Bid/Proposal Amt. _____%

It is hereby certified that the following information is a true and accurate account of utilization for sub-contracting opportunities on this Contract.

Signed:_____ Name/Title:_____ Date:_____

Failure to Complete, Sign and Submit Both Forms 10 & 20 SHALL render the Bid or Proposal Non-Responsive
Forms must be included with Bid / Proposal

Instructions for completing The Sub-(Contractors/Consultants/ Suppliers) to be Utilized Form

(Form MBD-20)

This form must be submitted with all bids or proposals. All subcontractors (regardless of ownership or size) projected to be utilized must be included on this form. Note: Ability or desire to self-perform all work shall not exempt the prime from Good Faith Efforts to achieve participation.

Contract No. This is the number assigned by the City of Tampa for the bid or proposal.

- **Contract Name.** This is the name of the contract assigned by the City of Tampa for the bid or proposal.
- **Contractor Name.** The name of your business and/or doing business as (dba) if applicable.
- **Address.** The physical address of your business.
- **Federal ID.** FIN. A number assigned to your business for tax reporting purposes.
- **Phone.** Telephone number to contact business.
- **Fax.** Fax number for business.
- **Email.** Provide email address for electronic correspondence.
- **No Subcontracting/consulting (of any kind) will be performed on this contract.** Checking box indicates your business will not use subcontractors when no Subcontract Goal or Participation Plan Requirement was set by the City, but will self-perform all work. When subcontractors are utilized during the performance of the contract, the "Sub-(Contractors/Consultants/Suppliers) Payments" form (MBD Form-30) must be submitted with every pay application and invoice. Note: certified SLBE or WMBE firms bidding as Primes are not exempt from outreach and solicitation of subcontractors, including completion and submitting Form-10 and Form-20.
- **No Firms listed To-Be-Utilized.** Check box; provide brief explanation why no firms were retained when a goal or participation plan requirement was set on the contract. Note: mandatory compliance with Good Faith Effort outreach (GFECP) requirements applies (MBD Form-50) and supporting documentation must accompany the bid.
- **See attached documents.** Check box, if after completing the DMI Form in its entirety, you need more space to list additional firms and/or if you have supplemental information/documentation relating to the scope/value/percent utilization of subcontractors. Reproduce copies of MBD-20 and attach. All data not submitted on duplicate forms must be in the same format and content as specified in these instructions.

The following instructions are for information of Any and All subcontractors To Be Utilized.

- **Federal ID.** FIN. A number assigned to a business for tax reporting purposes. This information is critical in proper identification of the subcontractor.
- **"S" = SLBE, "W" = WMBE.** Enter "**S**" for firms Certified by the City as Small Local Business Enterprises and/or "**W**" for firms Certified by the City as Women/Minority Business Enterprise; **"O" = Non-certified others**.
- **Company Name, Address, Phone & Fax**. Provide company information for verification of payments.
- **Type of Ownership.** Indicate the Ethnicity and Gender of the owner of the subcontracting business.
- **Trade, Services, or Materials (NIGP code if Known)** Indicate the trade, service, or material provided by the subcontractor. Abbreviated list of NIGP is available at http:/www.tampagov.net/mbd "Information Resources".
- **Amount of Quote, Letters of Intent** (required for both SLBEs and WMBEs).
- **Percent of Work/Contract.** Indicate the percent of the total contract price the subcontract(s) represent. For CCNA only (i.e. Consultant A/E Services) you must indicate subcontracts as percent of total scope/contract.
- **Total Subcontract/Supplier Utilization.** – Provide total dollar amount of all subcontractors/suppliers projected to be used for the contract. (Dollar amounts may be optional in CCNA depending on solicitation format).
- **Total SLBE Utilization.** Provide total dollar amount for all projected SLBE subcontractors/Suppliers used for this contract. (Dollar amounts may be optional in CCNA proposals depending on the solicitation format).
- **Total WMBE Utilization.** Provide total dollar amount for all projected WMBE subcontractors/Suppliers used for this contract. (Dollar amounts may be optional in CCNA proposals depending on the solicitation format).
- **Percent SLBE Utilization.** Total amount allocated to SLBEs divided by the total bid/proposal amount.
- **Percent WMBE Utilization.** Total amount allocated to WMBEs divided by the total bid/proposal amount.

If additional information is required or you have questions, please contact the Equal Business Opportunity Program - Minority and Small Business Development Office at (813) 274-5522.

TAMPA BID BOND
Contract 17-C-00006; West River Interceptor Cleaning

KNOW ALL MEN BY THESE PRESENTS, that we, _____

_____

(hereinafter called the Principal) and _____

(hereinafter called the Surety) a Corporation chartered and existing under the laws of the State of _____, with its principal offices in the City of _____, and authorized to do business in the State of Florida, are held and firmly bound unto the City of Tampa, a Municipal Corporation of Hillsborough County, Florida, in the full and just sum of 5% of the amount of the (Bid) (Proposal) good and lawful money of the United States of America, to be paid upon demand of the City of Tampa, Florida, to which payment will and truly to be made we bind ourselves, our heirs, executors, administrators, successors, and assigns, jointly and severally and firmly these presents.

WHEREAS, the Principal is about to submit, or has submitted to the City of Tampa, Florida, a Proposal for the construction of certain facilities for the City designated Contract 17-C-00006, West River Interceptor Cleaning.

WHEREAS, the Principal desires to file this Bond in accordance with law, in lieu of a certified Bidder's check otherwise required to accompany this Proposal.

NOW, THEREFORE: The conditions of this obligation are such that if the Proposal be accepted, the Principal shall, within twenty (20) days after the date of receipt of written Notice of Award, execute a contract in accordance with the Proposal and upon the terms, conditions and price set forth therein, in the form and manner required by the City of Tampa, Florida and execute a sufficient and satisfactory Public Construction Bond payable to the City of Tampa, Florida in an amount of one hundred percent (100%) of the total contract price, in form and with security satisfactory to said City, then this Bid Bond obligation is to be void; otherwise to be and remain in full force and virtue in law, and the Surety shall, upon failure of the Principal to comply with any or all of the foregoing requirements within the time specified above, immediately pay to the aforesaid City, upon demand, the amount thereof, in good and lawful money of the United States of America, not as a penalty, but as liquidated damages.

IN TESTIMONY THEREOF, the Principal and Surety have caused these presents to be duly signed and sealed this _____ day of _____, 20___.

Principal _____

BY _____

TITLE _____

BY _____

TITLE _____

(SEAL) _____
Producing Agent

_____
Producing Agent's Address

_____
Name of Agency

_____
The addition of such phrases as "not to exceed" or like import shall render the (Bid) (Proposal) non-responsive.

Revised 2016-08-29

AGREEMENT

For furnishing all labor, materials and equipment, together with all work incidental thereto, necessary and required for the performance of the work for the construction of Contract 17-C-00006 in accordance with your Proposal dated _____, amounting to a total of $_____ as completed in accordance with subsections I-2.09 and I-2.10 of the Instruction to Bidders.

THIS AGREEMENT, made and entered into in triplicate, this ____ day of _____, 20___, between the City of Tampa, Florida, hereinafter called the City, and hereinafter called the Contractor.

WITNESSETH that, in consideration of the mutual stipulations, agreements, and covenants herein contained, the parties hereto have agreed and hereby agree with each other, the Party of the First Part for itself, its successors and assigns, and the Party of the Second Part for itself, or himself, or themselves, and its successors and assigns, or his or their executors, administrators and assigns, as follows:

Contract 17-C-00006; West River Interceptor Cleaning, shall include, but not be limited to, cleaning gravity sewer pipes of the West River Interceptor from the Perry Siphon to the Krause Pump Station by a combination hydraulic high volume water and solids separation system, including approximately 14,700 lineal feet of 60-inch diameter gravity sewer of lined Reinforced Concrete Pipe, 350 lineal feet of 48-inch diameter gravity sewer of lined Reinforced Concrete Pipe, 370 lineal feet of 36-inch diameter gravity sewer of lined Reinforced Concrete Pipe, 370 lineal feet of 36-inch diameter gravity sewer of lined Ductile Iron Pipe and 370 lineal feet of 20-inch diameter gravity sewer of lined Ductile Iron Pipe; .including post sonar and CCTV inspection of all pipe lines with all associated work required for a complete project in accordance with the Contract Documents.

Contract Documents referred to in Article 1.01 of this Agreement also includes this volume, applicable standard drawings, the plans and any provisions referred to whether actually attached or not.

TAMPA AGREEMENT

SECTION 1
GENERAL

ARTICLE 1.01 THE CONTRACT

Except for titles, subtitles, headings, running headlines, and tables of contents (all of which are printed herein merely for convenience), the following, except for such portions thereof as may be specifically excluded, constitute the Contract:

The Notice to Bidders;
The Instructions to Bidders, including Special Instructions and General Instructions;
The Proposal;
The Bid Bond;
The Certification of Nonsegregated Facilities;
The Notice of Award;
The Agreement;
The Performance Bond;
The Notice To Proceed;
The Specifications, including the General Provisions, the Workmanship and Materials, the Specific Provisions or the Contract Items
The Plans;
All Supplementary Drawings Issued after award of the Contract;
All Addenda issued by the City prior to the receipt of proposals;
All provisions required by law to be inserted in this Contract, whether actually inserted or not.

ARTICLE 1.02 DEFINITIONS

The following words and terms, or pronouns used in their stead, shall, wherever they appear in this Contract, be construed as follows, unless different meaning is clear from the context:

(a)"City" shall mean the City of Tampa, Florida, represented by its Mayor and City Council, Party of the First Part, or such other City official as shall be duly empowered to act for the City on matters relating to this Contract.

(b)"Contractor" shall mean the Party of the Second Part hereto, whether corporation, firm or individual, or any combination thereof, and its, their, or his successors, personal representatives, executors, administrators, and assigns, and any person, firm or corporation who or which shall at any time be substituted in the place of the Party of the Second Part under this Contract.

(c)"Engineer" shall mean the Director of the Department or his duly authorized representative.

(d)"Consultant" shall mean the engineering or architectural firm or individual employed by the City to consult with and advise the City in the construction of the project.

(e)"Surety" shall mean any person, firm or corporation that has executed as Surety the Contractor's Performance Bond securing the performance of this Contact.

(f)"The Work" shall mean everything expressly or implied required to be furnished and done by the Contractor under the Contract, and shall include both Contract Work and Extra Work.

(g)"Contract Work" shall mean everything expressly or implied required to be furnished and done by the Contractor by any one or more of the Contract parts referred to in Article 1.01 hereof, except Extra Work, as hereinafter defined; it being understood that, in case of any inconsistency in or between any part or parts of this Contract, the Engineer shall determine which shall prevail.

(h)"Contract" or "Contract Documents" shall mean each of the various part of the Contract referred to in Article 1.01 hereof, both as a whole and severally.

(i)"Extra Work" shall mean work other than that required either expressly or implied by the contract in its present form.

(j)"Plans" shall mean only those drawings specifically referred to as such in these documents, or in any Addendum. Drawings issued after the execution of the Contract to explain further, or to illustrate, or to show changes in the work, will be known as "Supplementary Drawings" and shall be binding upon the Contractor with the same force as the Plans.

(k)"Specifications" shall mean all of the directions, requirements, and standards of performance applying to the work, as hereinafter detailed and designated as such, or which may be issued in an addendum.

(l)"Addendum or Addenda" shall mean the additional contract provisions issued in writing prior to the receipt of bids.

(m)"Notice" shall mean written notice. Notice shall be served upon the Contractor, either personally or by leaving the said notice at his residence or with any employee found on the work, or addressed to the Contractor at the residence or place of business given in his proposal and deposited in a postpaid wrapper in any post office box regularly maintained by the United States Post Office.

(n)"Project" shall mean the entire improvement package or related work. The "project" may consist of several different, but related, contracts.

(o)"Site" shall mean, and be limited to, the area upon or in which the Contractor's operations are carried on and such other appropriate areas as may be designed as such by the Engineer.

(p)"Subcontractor" shall mean any person, firm, or corporation, other than employees of the Contractor, who or which contracts with the Contractor to furnish, or actually furnishes labor, or labor and materials, or labor and equipment or labor, materials, and equipment at the site.

(q)Whenever in the Contract the words "directed", "required", "permitted", "ordered", "designated", "prescribed", and words of like import are used, they shall imply the direction, requirement, permission, order, designation, or prescription of the Engineer; and "approved", "acceptable", "satisfactory", "in the judgement of", and words of like import shall mean approved by, or acceptable to, or satisfactory to, or in the judgment of the Engineer.

(r)Whenever in the Contract the word "day" is used, it shall mean calendar day.

(s)"Final Acceptance" shall mean acceptance of the

work as evidenced by an official resolution of the City. Such acceptance shall be deemed to have taken place only if and when an approving resolution has been adopted by the City Council. The final acceptance shall be signed only after the City has assured itself by tests, inspection, or otherwise, that all of the provisions of the Contract have been carried out to its satisfaction.

(t)"Eastern Standard Time" shall be construed as the time being observed in the City on the day proposals are received or other documents issued or signed.

SECTION 2
POWERS OF THE CITY'S REPRESENTATIVES

ARTICLE 2.01 THE ENGINEER

It is covenanted and agreed that the Engineer, in addition to those matters elsewhere herein expressly made subject to his determination, direction, or approval, shall have the power, subject to such express provisions and limitations herein contained as are not in conflict herewith, and subject to review by the Mayor and City Council:

(a)To monitor the performance of the work.

(b)To determine the amount, kind, quality, sequence, and location of the work to be paid for hereunder and, when completed, to measure such work for payment.

(c)To determine all questions of an engineering character in relation to the work, to interpret the Plans, Specifications and Addenda.

(d)To determine how the work of this Contract shall be coordinated with the work of other contractors engaged simultaneously on this project.

(e)To make minor changes in the work as he deems necessary, provided such changes do not result in a net increase in the cost to the City or to the Contractor of the work to be done under the Contract.

(f)To amplify the Plans, add explanatory information and furnish additional Specifications and Drawings consistent with the intent of the Contract Documents.

The power of the Engineer shall not be limited to the foregoing enumeration, for it is the intent of this Contract that all of the work shall be subject to his determinations and approval, except where the determination or approval of someone other than the Engineer is expressly called for herein and except as subject to review by the Mayor and City Council. All orders of the Engineer requiring the Contractor to perform work as Contract work shall be promptly obeyed by the Contractor.

The Engineer shall not, however, have the power to issue an extra work order, and the performance of such work on the order of the Engineer without previously obtaining written confirmation thereof from the Mayor in accordance with Article 7.02 hereof may constitute a waiver of any right to extra compensation therefor. The Contractor is warned that the Engineer has no power to change the terms and provisions of this Contract, except minor changes where such change results in no net increase in the Contract Price.

ARTICLE 2.02 DIRECTOR

The Director of the Department in addition to those matters expressly made subject to his determination, direction or approval in his capacity as "Engineer", shall also have the power:

(a)To review any and all questions in relation to this Contract and its performance, except as herein otherwise specifically provided, and his determination upon such review shall be final and conclusive upon the Contractor.

(b)With the approval of the Mayor and City Council to authorize modifications or changes in the Contract so as to require: (1) the performance of extra work, or (2) the omission of Contract work whenever he deems it in the interest of the City to do so, or both.

(c)To suspend the whole or any part of the work whenever, in his judgment, such suspension is required: (1) in the interest of the City generally, or (2) to coordinate the work of the various Contractors engaged on this project, or (3) to expedite the completion of the entire project, even though the completion of this particular Contract may be thereby delayed, <u>without compensation to the Contractor for such suspension other than extending the time for the completion of the work, as much as it may have been, in the opinion of the City, delayed by such a suspension.</u>

(d)If, before the final acceptance of all the work contemplated herein, it shall be deemed necessary to take over, use, occupy, or operate any part of the completed or partly completed work, the Engineer shall have the right to do so and the Contractor will not, in any way, interfere with or object to the use, occupation, or operation of such work by the City after receipt of notice in writing from the Engineer that such work or part thereof will be used by the City on and after the date specified in such notice. Such taking over, use, occupancy or operation of any part of the completed or partially completed work shall not constitute final acceptance or approval of any such part of the work.

ARTICLE 2.03 NO ESTOPPEL

The City shall not, nor shall any department, officer, agent, or employee thereof, be bound, precluded, or estopped by any determination, decision, acceptance, return, certificate, or payment made or given under or in connection with this Contract by any officer, agent or employee of the City at any time either before or after final completion and acceptance of the work and payment therefor: (a) from showing the true and correct classification, amount, quality, or character of the work done, or that any determination, decision, acceptance, return certificate or payment is untrue, incorrect or improperly made in any particular, or that the work or any part thereof does not in fact conform to the requirements of the Contract Documents, and (b) from demanding and recovering from the Contractor any overpayments made to him or such damages as it may sustain by reason his failure to comply with the requirements of the Contract of Documents, or both.

ARTICLE 2.04 NO WAIVER OF RIGHTS

Neither the inspection, nor any order, measurements or certificate of the City or its employees, officers, or agents, nor by any order of the City for payment of money, nor any money, nor payments for or acceptance of the whole or any part of the work by the City, nor any extension of time, nor any changes in the Contract, Specifications or Plans, nor any possession by the City or its employees shall operate as a

waiver of any provisions of this Contract, nor any power herein provided nor shall any waiver of any breach of this Contract be held as a waiver of any other subsequent breach.

Any remedy provided in this Contract shall be taken and construed as cumulative, namely, in addition to each and every other suit, action, or legal proceeding. The City shall be entitled as of right to an injunction against any breach of the provisions of this Contract.

SECTION 3
PERFORMANCE OF WORK

ARTICLE 3.01 CONTRACTOR'S RESPONSIBILITY

The Contractor shall do all the work and furnish, at his own cost and expense, all labor, materials, equipment, and other facilities, except as herein otherwise provided, as may be necessary and proper for performing and completing the work under this Contract. The Contractor shall be responsible for the entire work until completed and finally accepted by the City.

The work shall be performed in accordance with the true intent and meaning of the Contract Documents. Unless otherwise expressly provided, the work must be performed in accordance with the best modern practice, with materials as specified and workmanship of the highest quality, all as determined by and entirely to the satisfaction of the Engineer.

Unless otherwise expressly provided, the means and methods of construction shall be such as the Contractor may choose, subject, however, to the approval of the Engineer. Only adequate and safe procedure, methods, structures and equipment shall be used. The Engineer's approval or the Engineer's failure to exercise his right thereon shall not relieve the Contractor of obligations to accomplish the result intended by the Contract, nor shall such create a cause of action for damages.

ARTICLE 3.02 COMPLIANCE WITH LAWS

The Contractor must comply with all local, State and Federal laws, rules, ordinances and regulations applicable to this Contract and to the work done hereunder, and must obtain, at his own expense, all permits, licenses or other authorization necessary for the prosecution of the work.

No work shall be performed under this Contract on Sundays, legal holidays or after regular working hours without the express permission of the Engineer. Where such permission is granted, the Engineer may require that such work be performed without additional expense to the City.

ARTICLE 3.03 INSPECTION

During the progress of the work and up to the date of final acceptance, the Contractor shall, at all times, afford the representatives of the City, the Florida Department of Environmental Regulation, and if applicable, the Federal Environmental Protection Agency and the Federal Department of Labor every reasonable, safe and proper facility for inspecting the work done or being done at the site. The inspection of any work shall not relieve the Contractor of any of his obligations to perform proper and satisfactory work as herein specified. Finished or unfinished work found not to be in strict accordance with the Contract shall be replaced as directed by the Engineer, even though such work may have been previously approved and payment made therefor.

The City shall have the right to reject materials and workmanship which are defective or require their correction. Rejected work and materials must be promptly removed from the site, which must at all times be kept in a reasonably clean and neat condition.

Failure or neglect on the part of the City to condemn or reject bad or inferior work or materials shall not be construed to imply an acceptance of such work or materials, if it becomes evident at any time prior to the final acceptance of the work by the City. Neither shall it be construed as barring the City at any subsequent time from the recovery of damages of such a sum of money as may be needed to build anew all portions of the work in which inferior work or improper materials were used, wherever found.

Should it be considered necessary or advisable by the City at any time before final acceptance of the entire work to make examinations of work already completed, by removing or tearing out all or portions of such work, the Contractor shall, on request, promptly furnish all necessary facilities, labor, and material for that purpose. If such work is found to be defective in any material respect, due to the fault of the Contractor or his subcontractors, he shall defray all expenses of such examination and of satisfactory reconstruction. If, however, such work is found to meet the requirements of the Contract, the cost of examination and restoration of the work shall be considered an item of extra work to be paid for in accordance with the provisions of Article 7.02 hereof.

ARTICLE 3.04 PROTECTION

During performance and until final acceptance, the Contractor shall be under an absolute obligation to protect the finished and unfinished work against any damage, loss, or injury. The Contractor shall take proper precaution to protect the finished work from loss or damage, pending completion and the final acceptance of all the work included in the entire Contract, provided that such precaution shall not relieve the Contractor from any and all liability and responsibility for loss or damage to the work occurring before final acceptance by the City. Such loss or damage shall be at the risk of and borne by the Contractor, whether arising from acts or omissions of the Contractor or others. In the event of any such loss or damage, the Contractor shall forthwith repair, replace, and make good the work without extension of time therefor, except as may be otherwise provided herein.

The provisions of this Article shall not be deemed to create any new right of action in favor of third parties against the Contractor or the City.

ARTICLE 3.05 PRESERVATION OF PROPERTY

The Contractor shall preserve from damage all property along the line of the work, or which is in the vicinity of or is in anywise affected by the work, the removal or destruction of which is not called for by the Plans. This applies, but is not limited, to the public utilities, trees, lawn areas, building monuments, fences, pipe and underground structures, public streets (except natural wear and tear of streets resulting from legitimate use thereof by the Contractor), and wherever such property is damaged due to the activities of the Contractor, it shall be immediately restored to its original condition by the Contractor and at his own expense.

In case of failure on the part of the Contractor to restore such property, or make good such damage or injury, the City may, upon forty-eight (48) hour written notice, proceed to repair, rebuild, or otherwise restore such property as may be deemed necessary, and the cost thereof will be deducted from any monies due or which may become due the Contractor under this Contract. Nothing in this clause shall prevent the Contractor from receiving proper compensation for the removal, damage, or replacement of any public or private property not shown on the Plans, when this is made necessary by alteration of grade or alignment authorized by the Engineer, provided that such property has not been damaged through fault of the Contractor, his employees or agents.

ARTICLE 3.06 BOUNDARIES
The Contractor shall confine his equipment, apparatus, the storage of materials, supplies and apparatus of his workmen to the limits indicated on the plans, by law, ordinances, permits or direction of the Engineer.

ARTICLE 3.07 SAFETY AND HEALTH REGULATIONS
The Contractor shall comply with the Department of Labor Safety and Health Regulations for construction promulgated under the Occupational Safety and Health Act of 1970 (PL 91- 596) and under Section 107 of the Contract Work Hours and Safety Standards Act (PL91-54).

ARTICLE 3.08 TAXES
All taxes of any kind and character payable on account of the work done and materials furnished under this Contract shall be paid by the Contractor and shall be deemed to have been included in his bid. The laws of the State of Florida provide that sales and use taxes are payable by the Contractor upon the tangible personal property incorporated in the work and such taxes shall be paid by the Contractor and shall be deemed to have been included in his bid.

ARTICLE 3.09 ENVIRONMENTAL CONSIDERATIONS
The Contractor, in the performance of the work under this Contract, shall comply with all Local, State and Federal laws, statutes, ordinances, rules and regulations applicable to protection of the environment; and, in the event he violates any of the provisions of same, he shall be answerable to the Local, State and Federal agencies designated by law to protect the environment. In the event the City receives, from any of the environmental agencies, a citation which is occasioned by an act or omission of the Contractor or his subcontractor or any officers, employees or agents of either, it is understood and agreed that the Contractor shall automatically become a party-respondent under said citation; and the City immediately shall notify the Contractor and provide him with a copy of said citation.

The Contractor shall comply with the requirements of the citation and correct the offending conditions(s) within the time stated in said citation and further shall be held fully responsible for all fines and/or penalties.

SECTION 4
TIME PROVISIONS

ARTICLE 4.01 TIME OF START AND COMPLETION
The Contractor must commence work within thirty (30) days subsequent to the date of the receipt of the "Notice to Proceed" by the City unless otherwise provided in the Specific Provisions and Special Instructions. Time being of the essence of this Contract, the Contractor shall thereafter prosecute the work diligently, using such means and methods of construction as well as secure its full completion in accordance with the requirements of the Contract Documents no later than the date specified therefor, or on the date to which the time for completion may be extended.

The Contractor must complete the work covered by this Contract in the number of consecutive calendar days set forth in the Instructions to Bidders, unless the date of completion is extended pursuant to the provisions of Article 4.05 hereof. The period for performance shall start from the date of signing of this Agreement by the City.

The actual date of completion will be established after a final inspection as provided in Article 4.07 hereof.

ARTICLE 4.02 PROGRESS SCHEDULE
To enable the work to be laid out and prosecuted in an orderly and expeditious manner, the Contractor shall submit to the Engineer a proposed progress schedule within fifteen (15) days after the award of this Contract.

The schedule shall state the Contract starting date, time for completion and date of completion and shall show the anticipated time of starting and completion of each of the various operations to be performed under this Contract, together with all necessary and appropriate information regarding sequence and correlation of work and an estimated time required for the delivery of all materials and equipment required for the work. The proposed schedule shall be revised as directed by the Engineer until finally approved by him, and, after such approval, shall be strictly adhered to by the Contractor. The approved progress schedule may be changed only with the written permission of the Engineer.

If the Contractor shall fail to adhere to the approved progress schedule or the schedule as revised, he shall promptly adopt such other or additional means and methods of construction as will make up for the time lost, and will assure completion in accordance with the contract time.

ARTICLE 4.03 APPROVAL REQUESTS
From time to time, as the work progresses and in the sequence indicated by the approved schedule, the Contractor must submit to the Engineer a specific request, in writing, for each item of information or approval required of him by the Contract. These requests must be submitted sufficiently in advance of the date upon which the information or approval is actually required by the Contractor to allow for the time the Engineer may take to act upon such submissions or resubmissions. The Contractor shall not have any right to an extension of time on account of delays due to his failure to submit his requests for the required information or the required approval in accordance with these requirements.

ARTICLE 4.04 COORDINATION WITH OTHER CONTRACTORS
During progress of the work, other Contractors may be engaged in performing other work on this project or on other projects on the site. In that event, the Contractor shall coordinate the work to be done hereunder with the work of such other Contractors in such manner as the Engineer may direct.

ARTICLE 4.05 EXTENSION OF TIME
If such an application is made, the Contractor shall be entitled to an extension of time for delay in completion of the work should the Contractor be obstructed or delayed in the commencement, prosecution or completion of any part of said work by any act or delay of the City, or by acts or omissions of other Contractors on this project, or by a riot, insurrection, war, pestilence, acts of public authorities, fire, lightning, hurricanes, earthquakes, tornadoes, floods, extremely abnormal and excessive inclement weather as indicated by the records of the local weather bureau for a five-year period preceding the date of the Contract, or by strikes, or other causes, which causes of delay mentioned in this Article, in the opinion of the City, are entirely beyond the expectation and control of the Contractor.

The Contractor shall, however, be entitled to an extension of time for such causes only for the number of days of delay which the City may determine to be due solely to such causes and only to the extent that such occurrences actually delay the completion of the project and then only if the Contractor shall have strictly complied with all of the requirements of Articles 4.01, 4.02, 4.03 and 4.04 hereof. It is hereby understood that the determination by the Engineer as to the order and sequence of the work shall not in itself constitute a basis for extension of time.

The determination made by the City on an application for an extension of time shall be binding and conclusive on the Contractor.

Delays caused by failure of the Contractor's materialmen, manufacturers, and dealers to furnish approved working drawings, materials, fixtures, equipment, appliances, or other fittings on time or failure of subcontractors to perform their work shall not constitute a basis of extension of time.

The Contractor agrees to make no claim for damages for delay in the performance of this Contract occasioned by any act or omission to act of the City or any of its representatives or because of any injunction which may be brought against the City or its representatives and agrees that any such claim shall be fully compensated for by an extension of time to complete performance of the work as provided herein.

ARTICLE 4.06 LIQUIDATED DAMAGES
It is mutually agreed between the parties that time is the essence of this Contract and that there will be on the part of the City considerable monetary damage in the event the Contractor should fail to complete the work within the time fixed for completion in the Contract or within the time to which such completion may have been extended.

The amount per day set forth in the Instructions to Bidders is hereby agreed upon as the liquidated damages for each and every calendar day that the time consumed in completing the work under this Contract exceeds the time allowed.

This amount shall, in no event, be considered as a penalty or otherwise than as the liquidated and adjusted damages to the City because of the delay and the Contractor and his Surety agree that the stated sum per day for each such day of delay shall be deducted and retained out of the monies which may become due hereunder and if not so deductible, the Contractor and his Surety shall be liable therefor.

ARTICLE 4.07 FINAL INSPECTION
When the work has been completed in accordance with the requirements of the Contract and final cleaning up performed, a date for final inspection of the work by the Engineer shall be set by the Contractor in a written request therefor, which date shall be not less than ten (10) days after the date of such request. The work will be deemed complete as of the date so set by the Contractor if, upon such inspection, the Engineer determines that no further work remains to be done at the site.

If such inspection reveals interms of work still to be performed, however, the Contractor shall promptly perform them and then request a reinspection. If, upon such inspection, the Engineer determines that the work is complete, the date of final completion shall be deemed to be the last day of such reinspection.

SECTION 5
SUBCONTRACTS AND ASSIGNMENTS

ARTICLE 5.01 LIMITATIONS AND CONSENT
The Contractor shall not assign, transfer, convey, sublet or otherwise dispose of this Contract or of his right, title, or interest therein, or his power to execute such Contract, or to assign any monies due or to become due thereunder to any other person, firm or corporation unless the previous written consent of the City shall first be obtained thereto and the giving of any such consent to a particular subcontract or assignment shall not dispense with the necessity of such consent to any further or other assignment.

Before making any subcontract, the Contractor must submit a

written statement to the Engineer, giving the name and address of the proposed contractor, the portion of the work and materials which he is to perform and furnish and any other information tending to prove that the proposed subcontractor has the necessary facilities, skill, integrity, past experience and financial resources to perform the work in accordance with the terms and conditions of this Contract.

If the City finds that the proposed subcontractor is qualified, the Contractor will be notified in writing. The City may revoke approval of any subcontractor when such subcontractor evidences an unwillingness or inability to perform his work in strict accordance with these Contract Documents. Notice of such revocation of approval will be given in writing to the Contractor.

The Contractor will promptly, upon request, file with the City a conformed copy of the subcontract. The Contractor shall cause appropriate provisions to be inserted in all subcontracts relative to the work to bind subcontractors to the Contractor by the terms of these Contract Documents, insofar as applicable to the work of subcontractors, and to give the Contractor the same power as regards terminating any subcontracts that the City may exercise over the Contractor under provisions of these Contract Documents.

The Contractor shall be required to perform with his own forces at least twenty-five (25) percent of the work, unless written consent to subcontract a greater percentage of the work is first obtained from the City.

ARTICLE 5.02 RESPONSIBILITY
The approval by the City of a subcontractor shall not relieve the Contractor of any of his responsibilities, duties, and liabilities hereunder. The Contractor shall be solely responsible to the City for the acts or defaults or omissions of his subcontractor and of such subcontractor's officers, agents, and employees, each of whom shall for all purposes be deemed to be the agent or employee of the Contractor. Nothing contained in the Contract Documents shall create any contractual relationship between any subcontractor and the City.

SECTION 6
SECURITY AND GUARANTY

ARTICLE 6.01 CONTRACT SECURITY
The Contractor shall execute and deliver to the City a Performance Bond on the form as provided herein, in an amount at least equal to one hundred (100) percent of the full Contract price, such Bond to be executed by a surety company acceptable to the City. The surety on such Performance Bond shall be a surety company duly authorized to do business in the State of Florida, and the Bond shall be issued or countersigned by a local resident producing agent of such surety company who is a resident of the State of Florida, regularly commissioned and licensed in said State, and satisfactory evidence of the authority of the person or persons executing such Bond shall be submitted with the Bond. The Performance Bond shall serve as security for the faithful performance of this Contract, including maintenance and guaranty provisions, and for the payment of all persons performing labor and furnishing materials in connection with the Contract. The premiums on the Performance Bond shall be paid by the Contractor.

If, at any time, the City shall become dissatisfied with any surety or sureties then upon the Performance Bond, or if for any other reason such bond shall cease to be adequate security for the City, the Contractor shall, within five days after notice so to do, substitute an acceptable Bond in such form and sum and signed by such other sureties as may be satisfactory to the City. The premiums on such Bond shall be paid by the Contractor. No further partial payments shall be deemed due or shall be made until the new sureties have qualified.

ARTICLE 6.02 CONTRACTORS INSURANCE
Insurance required shall be as indicated on Special Instructions pages beginning with "INS-1"

ARTICLE 6.03 AGAINST CLAIMS AND LIENS
The City may withhold from the Contractor as much as any approved payments to him as may, in the opinion of the City, be necessary to secure (a) just claims of any persons supplying labor or materials to the Contractor or any of his subcontractors for the work then due and unpaid; (b) loss due to defective work not remedied, or (c) liability, damage, or loss due to injury to persons or damages to the work or property of other contractors, subcontractors, or others, caused by the act or neglect of the Contractor or of any of his subcontractors. The City shall have the right, as agent for the Contractor, to apply any such amounts so withheld in such manner as the City may deem proper to satisfy such claims or to secure such protection. Such application of such money shall be deemed payments for the account of the Contractor.

ARTICLE 6.04 MAINTENANCE AND GUARANTY
The Contractor hereby guarantees all the work furnished under this Contract against any defects in workmanship and materials for a period of one year following the date of final acceptance of the work by the City. Under this guarantee, the Contractor hereby agrees to make good, without delay, at his own expense, any failure of any part of the work due to faulty materials or manufacture, construction, or installation, or the failure of any equipment to perform satisfactorily all the work put upon it within the limits of the Contract Documents, and further, shall make good any damage to any part of the work caused by such failure. It is hereby agreed that the Performance Bond shall fully cover all guarantees contained in this Article.
It is also agreed that all warranties, expressed or implied, inure to the benefit of the City and are enforceable by the City.

SECTION 7
CHANGES

ARTICLE 7.01 MINOR CHANGES
The City reserves the right to make such additions, deductions, or changes to this Contract from time to time as

it deems necessary and in a manner not materially affecting the substance thereof or materially changing the price to be paid in order to carry out and complete more fully and perfectly the work herein agreed to be done and performed. This Contract shall in no way be invalidated by any such additions, deductions, or changes, and no claim by the Contractor shall be made for any loss of anticipated profits thereby.

Construction conditions may require that minor changes be made in the location and installation of the work and equipment to be furnished and other work to be performed hereunder, and the Contractor when ordered by the Engineer, shall make such adjustments and changes in said locations and work as may be necessary, without additional cost to the City, provided such adjustments and changes do not alter the character, quantity of cost of the work as a whole, and provided further that Plans and Specifications showing such adjustments and changes are furnished to the Contractor by the City within a reasonable time before any work involving such adjustment and changes is begun. The Engineer shall be the sole judge of what constitutes a minor change for which no additional compensation shall be allowed.

ARTICLE 7.02 EXTRA WORK

The City may at any time by a written order and without notice to the sureties require the performance of such extra work as it may find necessary or desirable. An order for extra work shall be valid only if issued in writing and signed by the Mayor and the work so ordered must be performed by the Contractor.

The amount of compensation to be paid to the Contractor for any extra work as so ordered shall be determined as follows:

(a)By such applicable unit prices, if any, as are set forth in the Proposal; or

(b)If no such unit prices are set forth then by a lump sum or other unit prices mutually agreed upon by the City and the Contractor; or

(c)If no such unit prices are set forth in the Proposal and if the parties cannot agree upon a lump sum or other unit prices then by the actual net cost in money to the Contractor of the extra work performed, which cost shall be determined as follows:

(1) For all labor and foreman in direct charge of the authorized operations, the Contractor shall receive the current local rate of wages to be agreed upon, in writing, before starting such work for each hour that said labor and foremen are actually engaged thereon, to which shall be added an amount equal to 25 percent of the sum thereof which shall be considered and accepted as full compensation for general supervision, FICA taxes, contributions under the Florida Unemployment Compensation Act, insurance, bond, subcontractor's profit and overhead, the furnishing of small tools and miscellaneous equipment used, such as picks, shovels, hand pumps, and similar items.

(2) For all materials used, the Contractor shall receive the actual cost of such materials delivered at the site or previously approved delivery point as established by original receipted bills. No percentage shall be added to this cost.

(3) For special equipment and machinery such as power-driven pumps, concrete mixers, trucks, and tractors, or other equipment, required for the economical performance of the authorized work, the Contractor shall receive payment based on the average local area rental price for each item of equipment and the actual time of its use on the work. No percentage shall be added to this sum.

(4) Records of extra work done under this procedure shall be reviewed at the end of each day by the Contractor or his representative and the Engineer. Duplicate copies of accepted records shall be made and signed by both Contractor or his representative and the Engineer, and one copy retained by each.

Request for payment for approved and duly authorized extra work shall be submitted in the same form as Contract work or in the case of work performed under paragraph (c) (1) above upon a certified statement supported by receipted bills. Such statement shall be submitted for the current Contract payment for the month in which the work was done.

ARTICLE 7.03 DISPUTED WORK

If the Contractor is of the opinion that any work required, necessitated, or ordered violates the terms and provisions of this Contract, he must promptly notify the Engineer, in writing, of his contentions with respect thereto and request a final determination thereof. If the Engineer determines that the work in question is Contract work and not extra work or that the order complained of is proper, he will direct the Contractor to proceed and the Contractor shall promptly comply. In order, however, to reserve his right to claim compensation for such work or damages resulting from such compliance, the Contractor must, within five (5) days after receiving notice of the Engineer's determination and direction, notify the City in writing that the work is being performed or that the determination and direction is being complied with under protest. Failure of the Contractor to notify shall be deemed as a waiver of claim for extra compensation or damages therefor.

Before final acceptance by the City, all matters of dispute must be adjusted to the mutual satisfaction of the parties thereto. Final determinations and decisions, in case any questions shall arise, shall constitute a condition precedent to the right of the Contractor to receive the money therefor until the matter in question has been adjusted.

ARTICLE 7.04 OMITTED WORK

The City may at any time by a written order and without notice to the sureties require the omission of such Contract work as it may find necessary or desirable.

An order for omission of work shall be valid only if signed by the Mayor and the work so ordered must be omitted by the Contractor. The amount by which the Contract price shall be reduced shall be determined as follows:

(a) By such applicable unit prices, if any, as are set forth in the Contract; or

(b) By the appropriate lump sum price set forth in the Contract; or

(c) By the fair and reasonable estimated cost to the City

of such omitted work as determined by the Engineer and approved by the City.

SECTION 8
CONTRACTOR'S EMPLOYEES

ARTICLE 8.01 CHARACTER AND COMPETENCY

The Contractor and his subcontractors shall employ upon all parts of the work herein contracted for only competent, skillful, and trustworthy workers. Should the Engineer at any time give notice, in writing, to the Contractor or his duly authorized representative on the work that any employee in his opinion is incompetent, unfaithful, disorderly, careless, unobservant of instructions, or in any way a detriment to the satisfactory progress of the work, such employee shall immediately be dismissed and not again allowed upon the site.

ARTICLE 8.02 SUPERINTENDENCE

The Contractor shall give his personal supervision to the faithful prosecution of the work and in case of his absence shall have a competent, experienced, and reliable supervisor or superintendent, acceptable to the Engineer on the site who shall follow without delay all instructions of the Engineer in the prosecution and completion of the work and every part thereof, in full authority to supply workers, material, and equipment immediately. He shall keep on hand at all times copies of the Contract Documents.

ARTICLE 8.03 EMPLOYMENT OPPORTUNITIES

The Contractor shall, in the performance of the work required to be done under this Contract, employ all workers without discrimination regarding race, creed, color, sex or national origin and must not maintain or provide facilities that are segregated on the basis of race, color, creed or national origin.

ARTICLE 8.04 RATES OF WAGES

On federally assisted projects, the rates of wages to be paid under this Contract shall not be less than the rates of wages set forth in Section 12 of this Agreement.

On other projects, no wage rate determination is included. Florida's Prevailing Wage Law (Section 215.19, Florida Statutes) was repealed effective April 25, 1979.

ARTICLE 8.05 PAYROLL REPORTS

The Contractor and each subcontractor shall, if requested to do so, furnish to the Engineer a duly certified copy of his payroll and also any other information required by the Engineer to satisfy him that the provisions of the law as to the hours of employment and rate of wages are being observed.

Payrolls shall be prepared in accordance with instructions furnished by the City and on approved forms. The Contractor shall not carry on his payroll any persons not employed by him. Subcontractor's employees shall be carried only on the payrolls of the employing subcontractor.

SECTION 9
CONTRACTOR'S DEFAULT

ARTICLE 9.01 CITY'S RIGHT AND NOTICE

It is mutually agreed that: (a) if the Contractor fails to begin work when required to do so, or (b) if at any time during the progress of the work it shall appear to the Engineer that the Contractor is not prosecuting the work with reasonable speed, or is delaying the work unreasonably and unnecessarily, or (c) if the force of workmen or quality or quantity of material furnished are not sufficient to insure completion of the work within the specified time and in accordance with the Specifications hereto attached, or (d) if the Contractor shall fail to make prompt payments for materials or labor or to subcontractors for work performed under the Contract, or (e) if legal proceedings have been instituted by others than the City in such manner as to interfere with the progress of the work and may subject the City to peril of litigation or outside claims of (f) if the Contractor shall be adjudged a bankrupt or make an assignment for the benefit of creditors, or (g) if in any proceeding instituted by or against the Contractor an order shall be made or entered granting an extension of time of payment, composition, adjustment, modification, settlement or satisfaction of his debts or liabilities, or (h) if a receiver or trustee shall be appointed for the Contractor or the Contractor's property, or (i) if the Contract or any part thereof shall be sublet without the consent of the City being first obtained in writing, or (j) if this Contract or any right, monies, or claim thereunder shall be assigned by the Contractor, otherwise than as herein specified, or (k) if the Contractor shall fail in any manner of substance to observe the provisions of this Contract, or (l) if any of the work, machinery, or equipment shall be defective, and shall not be replaced as herein provided, or (m) if the work to be done under this Contract shall be abandoned, then such fact or conditions shall be certified by the Engineer and thereupon the City without prejudice to any other rights or remedies of the City, shall have the right to declare the Contractor in default and so notify the Contractor by a written notice, setting forth the ground or grounds upon which such default is declared and the Contractor must discontinue the work, either as a portion of the work or the whole thereof, as directed.

ARTICLE 9.02 CONTRACTOR'S DUTY UPON DEFAULT

Upon receipt of notice that his Contract is in default, the Contractor shall immediately discontinue all further operations on the work or such part thereof, and shall immediately quit the site or such part thereof, leaving untouched all plant, materials, equipment, tools, and supplies.

ARTICLE 9.03 COMPLETION OF DEFAULTED WORK

The City, after declaring the Contractor in default, may then have the work completed or the defective equipment or machinery replaced or anything else done to complete the work in strict accordance with the Contract Documents by such means and in such manner, by Contract with or without public letting, or otherwise, as it may deem advisable,

utilizing for such purpose without additional cost to the City such of the Contractor's plant, materials, equipment, tools, and supplies remaining on the site, and also such subcontractors as it may deem advisable.

The City shall reimburse all parties, including itself, for the expense of such completion, including liquidated damages, if any, and the cost of reletting. The City shall deduct this expense from monies due or to become due to the Contractor under this Contract, or any part thereof, and in case such expense is more than the sum remaining unpaid of the original contract price, the Contractor and his sureties shall pay the amount of such deficiency to the City.

ARTICLE 9.04 PARTIAL DEFAULT
In case the City shall declare the Contractor in default as to a part of the work only, the Contractor shall discontinue such part, shall continue performing the remainder of the work in strict conformity with the terms of the Contract, and shall in no way hinder or interfere with any other contractor or person whom the City may engage to complete the work as to which the Contractor was declared in default.

SECTION 10
PAYMENTS

ARTICLE 10.01 PRICES
For the Contractor's complete performance of the work, the City will pay and the Contractor agrees to accept, subject to the terms and conditions hereof, the lump sum prices or unit prices in the Contractor's Proposal and the award made therein, plus the amount required to be paid for any extra work ordered under Article 7.02 hereof, less credit for any work omitted pursuant to Article 7.04 hereof. Under unit price items, the number of units actually required to complete the work under the Contract may be more than stated in the Proposal. The Contractor agrees that no claim will be made for any damages or for loss of profits because of a difference between the quantities of the various classes of work assumed and stated in the Proposal Form as a basis for comparing Proposals and the quantities of work actually performed.

The sum as awarded for any lump sum Contract or lump sum Contract Item shall represent payment in full for all of the various classes of work, including materials, equipment, and labor necessary or required to complete, in conformity with the Contract Document, the entire work shown, indicated or specified under the lump sum Contract or lump sum Contract Item.

The amount as awarded as a unit price for any unit price Contact Item shall represent payment in full for all the materials, equipment, and labor necessary to complete, in conformity with the Contract Documents, each unit of work shown, specified, or required under the said unit price Contract Item.

No payment other than the amount as awarded will be made for any class of work included in a lump sum Contract Item or a unit price Contract Item, unless specific provision is made therefor in the Contract Documents.

ARTICLE 10.02 SUBMISSION OF BID BREAKDOWN
Within fifteen (15) days after the execution of this Contract, the Contractor must submit to the Engineer in duplicate an acceptable breakdown of the lump sums and unit prices bid for items of the Contract, showing the various operations to be performed under the Contract, as described in the progress schedule required under Article 4.02 hereof, and the value of each of such operations, the total of such items to equal the total price bid. The Contractor shall also submit such other information relating to the bid prices as may be required and shall revise the bid breakdown as directed. Thereafter, the breakdown may be used for checking the Contractor's applications for partial payments hereunder but shall not be binding upon the City or the Engineer for any purpose whatsoever.

ARTICLE 10.03 REPORTS, RECORDS AND DATA
The Contractor shall furnish to the Engineer such schedules of quantities and costs, progress schedules, reports, invoices, delivery tickets, estimates, records, and other data as the Engineer may request concerning work performed or to be performed and the materials furnished under the Contract.

ARTICLE 10.04 PAYMENTS BY CONTRACTOR
The Contractor shall pay (a) for all transportation and utility services not later than the 20th day of the calendar month following that in which such services are rendered, (b) for all materials, tools, and equipment delivered at the site of the project, and the balance of the cost thereof not later than the 30th day following the completion of that part of the work in or on which such materials, tools, and equipment are incorporated or used, and (c) to each of his subcontractors, not later than the 5th day following each payment to the Contractor, the respective amounts allowed the Contractor on account of the work performed by his subcontractors, to the extent of each subcontractor's interest therein; and proof of such payments or releases therefor shall be submitted to the Engineer upon request.

ARTICLE 10.05 PARTIAL PAYMENTS
On or about the first of each month, the Contractor shall make and certify an estimate, on forms prescribed by the City, of the amount and fair value of the work done, and may apply for partial payment therefor. The Contractor shall revise the estimate as the Engineer may direct. When satisfactory progress has been made, and shows that the value of the work completed since the last payment exceeds one percent (1%) of the total Contract price in amount, the Engineer will issue a certificate that such work has been completed and the value thereof. The City will then issue a voucher to the Contractor in accordance with the following schedule:

FOR CONTRACT AMOUNTS UNDER $250,000
(A)In the amount of ninety percent (90%) of the value of the work completed as certified until construction is one hundred percent (100%) complete (operational or beneficial occupancy), the withheld amount may be reduced below ten percent (10%), at the Engineer's option, to only that amount necessary to assure completion.

FOR CONTRACT AMOUNTS OVER $250,000

(A)In the amount of ninety percent (90%) of the value of the work completed as certified until construction is fifty percent (50%) complete.

(B)When the dollar value, as determined by the Engineer, of satisfactorily completed work in place is greater than fifty percent (50%) of the original contract price, vouchers for partial payment will be issued by the City to the Contractor in the amount of one hundred percent (100%) of the value of the work, above 50%, completed as certified for that payment period.

(C)If the Contractor has performed satisfactorily and the work is substantially complete (operational or beneficial occupancy) the withheld amount may be reduced, at the Engineer's option, to only that amount necessary to assure completion.

In addition to the Conditions set forth in (A), (B), and (C) above, payments will always be less any sums that may be retained or deducted by the City under the terms of any of the contract documents and less any sums that may be retained to cover monetary guarantees for equipment, materials or progress performance.

Payment on estimates made on or about the first of the month may be expected on or about the 20th of the month.

Unless specified otherwise in the Contract Items, the delivered cost of equipment and nonperishable materials suitably stored at the site of the work and tested for adequacy may be included in the Contractor's application for partial payment provided, however, that the Contractor shall furnish evidence satisfactory to the City that the Contractor is the unconditional owner and in possession of such materials or equipment. The amount to be paid will be 90 percent of the invoice cost to the Contractor which cost shall be supported by receipted bills within 30 days of the date of payment by the City to the Contractor. Such payment shall not relieve the Contractor from full responsibility for completion of the work and for protection of such materials and equipment until incorporated in the work in a permanent manner as required by the Contract Documents.

Before any payment will be made under this Contract, the Contractor and every subcontractor, if required, shall deliver to the Engineer a written, verified statement, in satisfactory form, showing in detail all amounts then due and unpaid by such Contractor or subcontractor to all laborers, workmen, and mechanics, employed by him under the Contract for the performance of the work at the site thereof, for daily or weekly wages, or to other persons for materials, equipment, or supplies delivered at the site of the work during the period covered by the payment under consideration.

ARTICLE 10.06 FINAL PAYMENT

Under determination of satisfactory completion of the work under this Contract as provided in Article 4.07 hereof, the Engineer will prepare the final estimate showing the value of the completed work. This estimate will be prepared within 30 days after the date of completion or as soon thereafter as the necessary measurements and computations can be made. All prior certificates and estimates, being approximate only, are subject to correction in the final estimate and payment.

When the final estimate has been prepared and certified by Engineer, he will submit to the Mayor and City Council the final certificate stating that the work has been completed and the amount based on the final estimate remaining due to the Contractor. The City will then accept the work as fully completed and will, not later than 30 days after the final acceptance, as defined in Article 1.02, of the work done under this Contract, pay the Contractor the entire amount so found due thereunder after deduction of all previous payments and all percentages and amounts to be kept and retained under provisions of this Contract; provided, however, and it is understood and agreed that, as a precedent to receiving final payment, the Contractor shall submit to the City a sworn affidavit that all bills for labor, service, materials, and subcontractors have been paid and that there are no suits pending in connection with this work. The City, at its option, may permit the Contractor to execute a separate surety bond in a form satisfactory to the City. The surety bond shall be in the full amount of the suit or suits.

Neither the final payment nor any part of the retained percentage shall be paid until the Contractor, if required, shall furnish the City with a complete release from any should remain unsatisfied after all payments are made, the Contractor shall refund to the City all monies which the City may be compelled to pay in discharging such claim, including incidental costs and attorney's fees.

ARTICLE 10.07 ACCEPTANCE OF FINAL PAYMENT

The acceptance by the Contractor, or by anyone claiming by or through him, of the final payment shall operate as and shall be a release to the City and every officer and agent thereof from any and all claims and liability to the Contractor for anything done or furnished in connection with the work or project and for any act or neglect of the Contractor or of any others relating to or affecting the work. No payment, however, final or otherwise, shall operate to release the Contractor or his sureties from any obligations under this Contract or the Performance Bond.

SECTION 11
MISCELLANEOUS PROVISIONS

ARTICLE 11.01 CONTRACTOR'S WARRANTIES

In consideration of, and to induce the award of this contract to him, the Contractor represents and warrants:

(a)That he is not in arrears to the City upon debt or contract, and he is not a defaulter, as surety, contractor, or otherwise.

(b)That he is financially solvent and sufficiently experienced and competent to perform the work.

(c)That the work can be performed as called for by the Contract Documents.

(d)That the facts stated in his proposal and the information given by him are true and correct in all respects.

(e)That he is fully informed regarding all the conditions affecting the work to be done and labor and materials to be

furnished for the completion of this Contract, and that his information was secured by personal investigation and research.

ARTICLE 11.02 PATENTED DEVICES, MATERIAL AND PROCESSES

It is mutually understood and agreed that Contract prices include all royalties and costs arising from patents, trademarks, and copyrights in any way involved in the work. Whenever the Contractor is required or desires to use any design, device, material, or process covered by letters of patent or copyright, the Contractor shall indemnify and save harmless the City, its officers, agents and employees from any and all claims for infringement by reason of the use of any such patented design, device, tool, material, equipment, or process, to be performed under the Contract, and shall indemnify the said City, its officers, agents, and employees for any costs, expenses, and damages which may be incurred by reason of such infringement at any time during the prosecution or after completion of the work.

ARTICLE 11.03 SUITS AT LAW

In case any action at law or suit in equity may or shall be brought against the City or any of its officers, agents, or employees for or on account of the failure, omission, or neglect of the Contractor or his subcontractors, employees, or agents, to do or perform any of the covenants, acts, matters, or things by this Contract undertaken to be done or performed by the Contractor of his subcontractors, employees, or agents, or from any injuries done to property or persons and caused by the negligence or alleged negligence of the Contractor of his subcontractors, employees, or agents, or in any other manner arising out of the performance of this Contract, then the Contractor shall immediately assume and take charge of the defense of such actions or suits in like manner and to all intents and purposes as if said actions or suits have been brought directly against the Contractor, and the Contractor shall also indemnity and save harmless the City, its officers, agents, and employees from any and all loss, cost or damage whatever arising out of such actions or suits, in like manner and to all intents and purposes as if said actions or suits have been brought directly against the Contractor.

The Contractor shall and does hereby assume all liability for and agrees to indemnify the City or its Engineer against any or all loss, costs, damages, and liability for any or by reason of any lien, claims or demands, either for materials purchased or for work performed by laborers, mechanics, and others and from any damages, costs, actions, or causes of action and judgement arising from injuries sustained by mechanics, laborers, or other persons by reason of accidents or otherwise, whether caused by the carelessness or inefficiency or neglect of said Contractor, his subcontractors, agents, employees, workmen or otherwise.

ARTICLE 11.04 CLAIMS FOR DAMAGES

If the Contractor shall claim compensation for any damage sustained, other than for extra or disputed work covered by Article 7.02 and 7.03 hereof, by reason of any act or omission of the City, its agents, or any persons, he shall, within five days after sustaining such damage, make and deliver to the Engineer a written statement of the nature of the damage sustained and of the basis of the claim against the City. On or before the 15th of the month succeeding that in which any damage shall have been sustained, the Contractor shall make and deliver to the Engineer an itemized statement of the details and amounts of such damage, duly verified by the Contractor. Unless such statements shall be made delivered within the times aforesaid, it is stipulated that and all claims for such compensation shall be forfeited and invalidated, and the Contractor shall not be entitled to payment on account of such claims.

ARTICLE 11.05 NO CLAIMS AGAINST INDIVIDUALS

No claim whatsoever shall be made by the Contractor against any officer, agent, employee of the City for, or on account of, anything done or omitted to be done in connection with this Contract.

ARTICLE 11.06 LIABILITY UNAFFECTED

Nothing herein contained shall in any manner create any liability against the City on behalf of any claim for labor, services, or materials, or of subcontractors, and nothing herein contained shall affect the liability of the Contractor or his sureties to the City or to any workmen or materialsmen upon bond given in connection with this Contract.

ARTICLE 11.07 INDEMNIFICATION PROVISIONS

Whenever there appears in this Agreement, or in the other Contact Documents made a part hereof, an indemnification provision within the purview of Chapter 725.06, Laws of Florida, the monetary limitation on the extent of the indemnification under each such provision shall be One Million Dollars or a sum equal to the total Contract price, whichever shall be the greater.

ARTICLE 11.08 UNLAWFUL PROVISIONS DEEMED STRICKEN

If this contract contains any unlawful provisions not an essential part of the Contract and which shall not appear to have a controlling or material inducement to the making thereof, such provisions shall be deemed of no effect and shall, upon notice by either party, be deemed stricken from the Contract without affecting the binding force of the remainder.

ARTICLE 11.09 LEGAL PROVISIONS DEEMED INCLUDED

Each and every provision of any law and clause required by law to be inserted in this Contract shall be deemed to be inserted herein, and the Contract shall be read and enforced as though it were included herein and if, through mistake or otherwise, any such provision is not inserted or is not correctly inserted, then upon application of either party the Contract shall forthwith be physically amended to make such insertion.

ARTICLE 11.10 DEATH OR INCOMPETENCY OF CONTRACTOR

In the event of death or legal incompetency of a Contractor who shall be an individual or surviving member of a contracting firm, such death or adjudication of incompetency

shall not terminate the Contract, but shall act as default hereunder to the effect provided in Article 9.01 hereof and the estate of the Contractor and his surety shall remain liable hereunder to the same extent as though the Contractor had lived. Notice of default, as provided in Article 9.01 hereof, shall not be required to be given in the event of such death or adjudication of incompetency.

ARTICLE 11.11 NUMBER AND GENDER OF WORDS
Whenever the context so admits or requires, all references herein in one number shall be deemed extended to and including the other number, whether singular or plural, and the use of any gender shall be applicable to all genders.

ARTICLE 11.12 ACCESS TO RECORDS
Representatives of Federal Agencies, if applicable, and the State of Florida shall have access to the work whenever it is in preparation of progress. On federally assisted projects the Federal Agency, the Comptroller General of the United States, or any authorized representative shall have access to any books, documents, papers, and records of the Contractor which are pertinent to the project for the purpose of making audit, examination, excerpts, and transcription thereof.

SECTION 12
LABOR STANDARDS

ARTICLE 12.01 LABOR STANDARDS
The Contractor shall comply with all of the regulations set forth in "Labor Standards Provisions for Federally Assisted Construction Contracts", which may be attached, and any applicable Florida Statutes.

ARTICLE 12.02 NOTICE TO LABOR UNIONS
If required, the Contractor shall provide Labor Unions and other organizations of workers, and shall post, in a conspicuous place available to employees or applicants for employment, a completed copy of the form entitled "Notice to Labor Unions or Other Organizations of Workers" attached to and made a part of this Agreement.

ARTICLE 12.03 SAFETY AND HEALTH REGULATIONS
The Contractor shall comply with the Department of Labor Safety and Health Regulations for construction promulgated under the Occupational Safety and Health Act of 1970 (PL 91- 596) and under Section 107 of the Contract Work Hours and Safety Standards Act (PL 91-54). Nothing in these Acts shall be construed to supersede or in any manner affect any worker's compensation law or statutory rights, duties, or liabilities of employers and employees under any law with respect to injuries, diseases, or death of employees arising out of, or in the course of, employment.

ARTICLE 12.04 EEO AFFIRMATIVE ACTION REQUIREMENTS
The Contractor understands and agrees to be bound by the equal opportunity requirements of Federal regulations which shall be applicable throughout the performance of work under this Contract. The Contractor also agrees to similarly bind contractually each subcontractor. In policies, the Contractor agrees to engage in Affirmative Action directed at promoting and ensuring equal employment opportunity in the work force used under the Contract (and the Contractor agrees to require contractually the same effort of all subcontractors whose subcontractors exceed $100,000). The Contractor understands and agrees that "Affirmative Action" as used herein shall constitute a good faith effort to achieve and maintain minority employment in each trade in the on-site work force used on the Contract.

ARTICLE 12.05 PREVAILING RATES OF WAGES
Florida's prevailing wage law was repealed effective April 25, 1979.

For Federally assisted projects, appropriate prevailing wage rate determinations are indicated on pages beginning with WR-1.

* * * * * * *

IN WITNESS THEREOF, the parties have hereunto set their hands and seals, and such of them as are corporation have caused these present to be signed by their duly authorized officers.

CITY OF TAMPA, FLORIDA

_____
Bob Buckhorn, Mayor
(SEAL)

ATTEST:

_____
City Clerk

Approved as to Form:
The execution of this document was authorized
by Resolution No. _____

_____
Rachel S. Peterkin, Assistant City Attorney

Contractor

By:_____
(SEAL)

Title:

ATTEST:

_____
Witness

STATE OF)
) SS:
COUNTY OF)

For a Corporation:

STATE OF _____
COUNTY OF _____

The foregoing instrument was acknowledged before me this ___ of _____, 20___ by _____ of _____, a _____ corporation, on behalf of the corporation. He/she is ___ personally known or has ___ produced _____ as identification.

_____
Notary

My Commission Expires:

_____

For an Individual:

STATE OF _____
COUNTY OF _____

The foregoing instrument was acknowledged before me this ___ of _____, 20___ by _____ who is ___ personally known to me or has ___ produced _____ as identification.

_____
Notary

My Commission Expires:

_____

For a Firm:

STATE OF _____
COUNTY OF _____

The foregoing instrument was acknowledged before me this ___ of _____, 20___ by _____ who signed on behalf of the said firm. He/she is ___ personally known or has ___ produced _____ as identification.

_____
Notary

My Commission Expires:

_____

_____

PUBLIC CONSTRUCTION BOND

Bond No. (enter bond number)_____

Name of Contractor:_____

Principal Business Address of Contractor:_____

_____

Telephone Number of Contractor:_____

Name of Surety (if more than one list each):_____

_____

Principal Business Address of Surety:_____

_____

Telephone Number of Surety:_____

Owner is The City of Tampa, Florida

Principal Business Address of Owner: 306 E Jackson St, Tampa, FL 33602

Contract Administration Department (280A4N)

Telephone Number of Owner: 813/274-8456

Contract Number Assigned by City to contract which is the subject of this bond:_____

Legal Description or Address of Property Improved or Contract Number is:_____

_____

_____

_____

General Description of Work and Services:_____

_____

_____

_____

Revised 2016-08-29

KNOW ALL MEN BY THESE PRESENTS That we, _____

_____
(Name of Contractor)

as Principal, hereinafter called CONTRACTOR, of the State of _____, and

_____(Name of Surety)
a corporation organized and existing under and by virtue of the laws of the State of _____, and regularly authorized to do business in the State of Florida, as SURETY, are held and firmly bound unto the City of Tampa, a municipal corporation organized and existing under the laws of the State of Florida, hereinafter called Owner, in the penal sum of _____Dollars and _____Cents ($_____), lawful money of the United States of America, for the payment whereof well and truly to be made, we bind ourselves, our heirs, executors, and administrators, successors and assigns, jointly and severally, firmly by these presents.

THE CONDITION OF THIS BOND is that if Principal:

1. Performs the contract dated _____, _____, 20___, between Principal and Owner for construction of _____, the contract being made a part of this bond by reference, in the time and in the manner prescribed in the contract; and

2. Promptly makes payments to all claimants, as defined in Section 255.05(1) (Section 713.01), Florida Statutes, supplying Principal with labor, materials, or supplies, used directly or indirectly by Principal in the prosecution of the work provided for in the contract; and

3. Pays Owner all losses, damages, expenses, costs, and attorney's fees, including appellate proceedings, that Owner sustains because of a default by Principal under the contract; and

4. Performs the guarantee of all work and materials furnished under the contract for the time specified in the contract, then this bond is void; otherwise it remains in full force.

5. Contractor and Surety acknowledge that the Work for which this bond has been issued may be one of several such contract documents for a group of projects. This bond does not secure covenants to pay for or to perform design services survey or program management services. The Owner/Obligee is expected to reasonably account for damages that are caused to Owner with respect to Principal's (Contractor's) default in performance of the scope of the Work incorporated by reference into the bond, and notwithstanding any contractual or common law remedy permitted to Owner as against Contractor, the obligation of Surety for any damages under this bond shall be determined by the cost of completion of the Work less the contract balance unpaid upon default of Contractor for the Work plus liquidated damages at the rate of $500.00 per day for delays by the Contractor and/or Surety in reaching substantial completion.

6. The notice requirements for claimants and conditions for entitlement to payment set forth in Section 255.05, Fla. Stat. and the limitations period to actions upon Section 255.05, Fla. Stat. bonds apply to claimants seeking payment from surety under this bond. Any action instituted by a claimant under this bond for payment must be in accordance with the notice and time limitation provisions in Section 255.05, Florida Statutes.

7. The Surety, for value received, hereby stipulates and agrees that no changes, extensions of time, alterations or additions to the terms of the contract documents or other Work to be performed hereunder, or the specifications referred to therein shall in any way affect its obligations under this bond, and it does hereby waive notice of any such changes, extensions of time, alterations or additions to the terms of the Contract or to Work or to the specifications.

8. The above SURETY states that it has read all of the Contract Documents made by the CONTRACTOR with the CITY, hereto attached, and the terms and conditions of the contract and work, and is familiar therewith and in particular those portions of the Agreement concerning the guaranty of such CONTRACTOR for a period of one year following the date of the final acceptance of the completed work under the Contract by the CITY, all of which this BOND includes.

DATED ON _____, 20___

_____
(Name of Principal)

_____
(Principal Business Address)

By _____

Title _____

_____
Telephone Number of Principal

_____
(Name of Surety)

_____
(Surety Address)

By _____
(As Attorney in Fact)*

_____
Telephone Number of Surety

Approved as to legal sufficiency:

By _____
Assistant City Attorney

Countersignature:

_____
(Name of Local Agency)

_____
(Address of Resident Agent)

By _____

Title _____

_____
Telephone Number of Local Agency

*(As Attorney in Fact) attach Power of Attorney and Current Certificate with Original Signature

SPECIFICATIONS
GENERAL PROVISIONS

SECTION 1
SCOPE AND INTENT

G-1.01 DESCRIPTION
The work to be done consists of the furnishing of all labor, materials and equipment, and the performance of all work included in this Contract.

G-1.02 WORK INCLUDED
The Contractor shall furnish all labor, superintendence, materials, plant, power, light, heat, fuel, water, tools, appliances, equipment, supplies, and other means of construction necessary or proper for performing and completing the work. He shall obtain and pay for all required permits. He shall perform and complete the work in the manner best calculated to promote rapid construction consistent with safety of life and property and to the satisfaction of the Engineer, and in strict accordance with the Contract Documents. The Contractor shall clean up the work and maintain it during and after construction, until accepted, and shall do all work and pay all costs incidental thereto. He shall repair or restore all structures and property that may be damaged or disturbed during performance of the work.

The cost of incidental work described in these General Provisions, for which there are no specific Contract Items, shall be considered as part of the overhead cost of doing the work and shall be included in the prices for the various Contract Items. No additional payment will be made therefor.

The Contractor shall provide and maintain such modern plant, tools, and equipment as may be necessary, in the opinion of the Engineer, to perform in a satisfactory and acceptable manner all the work required by this Contract. Only equipment of established reputation and proven efficiency shall be used. The Contractor shall be solely responsible for the adequacy of his plant and equipment, prior approval of the Engineer notwithstanding.

G-1.03 PUBLIC UTILITY INSTALLATIONS AND STRUCTURES
Public utility installations and structures shall be understood to include all poles, tracks, pipes, wires, conduits, house service connections, vaults, manholes, and all other appurtenances and facilities pertaining thereto whether owned or controlled by the City, other governmental bodies or privately owned by individuals, firms, or corporations, and used to serve the public with transportation, traffic control, gas, electricity, telephone, sewerage, drainage, water or other public or private property which may be affected by the work.

The Contract Documents contain data relative to existing public utility installations and structures above and below the ground surface. These data are not guaranteed as to their completeness or accuracy and it is the responsibility of the Contractor to make his own investigations to inform himself fully of the character, condition and extent of all such installations and structures as may be encountered and as may affect the construction operations.

The Contractor shall protect all public utility installations and structures from damage during the work. Access across any buried public utility installation or structure shall be made only in such locations and by means approved by the Engineer. The Contractor shall so arrange his operations as to avoid any damage to these facilities. All required protective devices and construction shall be provided by the Contractor at his expense. All existing public utilities damaged by the Contractor which are shown on the Plans or have been located in the field by the utility shall be repaired by the Contractor, at his expense, as directed by the Engineer. No separate payment shall be made for such protection or repairs to public utility installations or structures.

Public utility installations or structures owned or controlled by the City or other governmental body which are shown on the Plans to be removed, relocated, replaced or rebuilt by the Contractor shall be considered as a part of the general cost of doing the work and shall be included in the prices bid for the various Contract Items. No separate payment shall be made therefor.

Where public utility installations or structures owned or controlled by the City or other governmental body are encountered during the course of the work, and are not indicated on the Plans or in the Specifications, and when, in the opinion of the Engineer, removal, relocation, replacement or rebuilding is necessary to complete the work under this Contract, such work shall be accomplished by the utility having jurisdiction or such work may be ordered, in writing by the Engineer, for the Contractor to accomplish. If such work is accomplished by the utility having jurisdiction it will be carried out expeditiously and the Contractor shall give full cooperation to permit the utility to complete the removal, relocation, replacement or rebuilding as required. If such work is accomplished by the Contractor, it will be paid for as extra work as provided for in Article 7.02 of the Agreement.

The Contractor shall, at all times in performance of the work, employ approved methods and exercise reasonable care and skill so as to avoid unnecessary delay, injury, damage or destruction of public utility installations and structures; and shall, at all times in the performance of the work, avoid unnecessary interference with, or interruption of, public utility services, and shall cooperate fully with the owners thereof to that end.

All City and other governmental utility departments and other owners of public utilities, which may be affected by the work, will be informed in writing by the Engineer within two weeks after the execution of the Contract or Contracts covering the work. Such notice will set out, in general, and direct attention to, the responsibilities of the City and other governmental

utility departments and other owners of public utilities for such installations and structures as may be affected by the work and will be accompanied by one set of Plans and Specifications covering the work under such Contract or Contracts.

In addition to the general notice given by the Engineer, the Contractor shall give written notice to all City and other governmental utility departments and other owners of public utilities of the location of his proposed construction operations, at least forty-eight (48) hours in advance of breaking ground in any area or on any unit of the work. This can be accomplished by making the appropriate contact with the "Underground Utility Notification Center for Excavators (Call Candy)".

The maintenance, repair, removal, relocation, or rebuilding of public utility installations and structures, when accomplished by the Contractor as herein provided, shall be done by methods approved by the Engineer.

SECTION 2
PLANS AND SPECIFICATIONS

G-2.01 PLANS
The Plans referred to in the Contract Documents bear the general project name and number as shown in the Notice To Bidders.

When obtaining data and information from the Plans, figures shall be used in preference to scaled dimensions, and large scale drawings in preference to small scale drawings.

G-2.02 COPIES FURNISHED TO CONTRACTOR
After the Contract has been executed, the Contractor will be furnished with five sets of paper prints, the same size as the original drawings, of each sheet of the Plans and five copies of the Specifications. Additional copies of the Plans and Specifications, when requested, may be furnished to the Contractor at cost of reproduction.

The Contractor shall furnish each of the subcontractors, manufacturers, and material suppliers such copies of the Contract Documents as may be required for his work.

G-2.03 SUPPLEMENTARY DRAWINGS
When, in the opinion of the Engineer, it becomes necessary to explain more fully the work to be done or to illustrate the work further or to show any changes which may be required, drawings known as Supplementary Drawings, with specifications pertaining thereto, will be prepared by the Engineer and five paper prints thereof will be given to the Contractor.

The Supplementary Drawings shall be binding upon the Contractor with the same force as the Plans. Where such Supplementary Drawings require either less or more than the estimated quantities of work, credit to the City or compensation therefor to the Contractor shall be subject to the terms of the Agreement.

G-2.04 CONTRACTOR TO CHECK PLANS AND DATA
The Contractor shall verify all dimensions, quantities, and details shown on the Plans, Supplementary Drawings, Schedules, Specifications, or other data received from the Engineer, and shall notify him of all errors, omissions, conflicts, and discrepancies found therein. Failure to discover or correct errors, conflicts or discrepancies shall not relieve the Contractor of full responsibility for unsatisfactory work, faulty construction or improper operation resulting therefrom nor from rectifying such conditions at his own expense. He will not be allowed to take advantage of any errors or omissions as full instructions will be furnished by the Engineer, should such errors or omissions be discovered. All schedules are given for the convenience of the Engineer and the Contractor and are not guaranteed to be complete. The Contractor shall assume all responsibility for the making of estimates of the size, kind, and quality of materials and equipment included in work to be done under the Contract.

G-2.05 SPECIFICATIONS
The specifications consist of four parts, the General Provisions, the Technical Specifications, the Special Provisions and the Contract Items. The General Provisions and Technical Specifications contain general requirements which govern the work. The Special Provisions and the Contract Items modify and supplement these by detailed requirements for the work and shall always govern, whenever there appears to be conflict.

G-2.06 INTENT
All work called for in the Specifications applicable to this Contract, but not shown on the Plans in their present form, or vice versa, shall be of like effect as if shown or mentioned in both. Work not specified in either the Plans or in the Specifications, but involved in carrying out their intent or in the complete and proper execution of the work, is required and shall be performed by the Contractor as though it were specifically delineated or described.

The apparent silence of the Specifications as to any detail, or the apparent omission from them of a detailed description concerning any work to be done and materials to be furnished, shall be regarded as meaning that only the best general practice is to prevail and that only material and workmanship of the best quality is to be used, and interpretation of these Specifications shall be made upon that basis.

SECTION 3
WORKING DRAWINGS

G-3.01 SCOPE
The Contractor shall promptly prepare and submit layout, detail and shop drawings to insure proper construction, assembly, and installation of the work using those materials and methods as hereafter specified under the Technical Specifications, Special Provisions and Contract Items.

These drawings shall accurately and distinctly present the following:

a. All working and erection dimensions.
b. Arrangements and sectional views.
c. Necessary details, including complete information for making connections between work under this Contract and work under other Contracts.
d. Kinds of materials and finishes.
e. Parts listed and description thereof.

Drawings for mechanical equipment shall present, where applicable, such data as dimensions, weight and performance characteristics. These data shall show conformance with the performance characteristics and other criteria incorporated in the Plans and Specifications.

Each drawing shall be dated and shall contain the name of the project, Division number and description, the technical specifications section number, names of equipment or materials and the location at which the equipment or materials are to be installed. Location shall mean both physical location and location relative to other connected or attached material. The Engineer will return unchecked any submittal which does not contain complete data on the work and full information on related matters.

Stock or standard drawings will not be accepted for review unless full identification and supplementary information is shown thereon in ink or typewritten form.

The Contractor shall review all working drawing submittals before transmitting them to the Engineer to determine that they comply with requirements of the Specifications. Drawings which are incomplete or are not in compliance with the Contract Documents shall not be submitted for processing by the Engineer. The Contractor shall place his stamp of approval on all working drawings submitted to the Engineer to indicate compliance with the above.

G-3.02 APPROVAL
If the working drawings show departures from the Contract requirements, the Contractor shall make specific mention thereof in his letter of submittal; otherwise approval of such submittals shall not constitute approval of the departure. Approval of the drawings shall constitute approval of the subject matter thereof only and not of any structure, material, equipment, or apparatus shown or indicated.

The approval of drawings will be general and shall not relieve the Contractor of responsibility for the accuracy of such drawings, nor for the proper fitting and construction of the work, nor for the furnishing of materials or work required by the Contract and not indicated on the drawings. No work called for by working drawings shall be done until such drawings have been approved by the Engineer.

The procedure in seeking approval of the working drawings shall be as follows:

1.The Contractor shall submit four complete sets of drawings and other descriptive data together with one copy of a letter of transmittal to the Engineer for approval. The letter of transmittal shall contain the name of the project, contract number, technical specifications section number, the name of the Contractor, a list of drawings with numbers and titles, and any other pertinent information.

2.Drawings or descriptive data will be stamped "Approved", "Approved Subject to Corrections Marked", or "Examined and Returned for Correction" and one copy with a letter of transmittal will be returned to the Contractor.

3.If a drawing or other data is stamped "Approved", the Contractor shall insert the date of approval on five additional copies of the document and transmit the five copies to the Engineer together with one copy of a letter of transmittal containing substantially the same information as described in Instruction 1. above.

4.If a drawing or other data is stamped "Approved Subject to Corrections Marked", the Contractor shall make the corrections indicated and proceed as in Instruction 3., above.

5.If a drawing or data is stamped "Examined and Returned for Correction", the Contractor shall make the necessary corrections and resubmit the documents as set forth in Instruction 1., above. The letter of transmittal shall indicate that this is a resubmittal.

The Contractor shall revise and resubmit the working drawings as required by the Engineer, until approval thereof is obtained.

SECTION 4
MATERIALS AND EQUIPMENT

G-4.01 GENERAL REQUIREMENTS
All materials, appliances, and types or methods of construction shall be in accordance with the Specifications and shall, in no event, be less than that necessary to conform to the requirements of any applicable laws, ordinances, and codes.

All materials and equipment shall be new, unused, and correctly designed. They shall be of standard first grade quality, produced by expert personnel, and intended for the use for which they are offered. Materials or equipment which, in the opinion of the Engineer, are inferior or of a lower grade than indicated, specified, or required will not be accepted.

The quality of Workmanship and Materials entering into the work under this Contract shall conform to the requirements of the pertinent sections, clauses, paragraphs, and sentences, both directly and indirectly applicable thereto, of that part of the Technical Specifications, whether or not direct reference to such occurs in the Contract Items.

Equipment and appurtenances shall be designed in conformity with ANSI, ASME, IEEE, NEMA and other

generally accepted standards and shall be of rugged construction and of sufficient strength to withstand all stresses which may occur during fabrication, testing, transportation, installation, and all conditions of operation. All bearings and moving parts shall be adequately protected against wear by bushings or other approved means and shall be fully lubricated by readily accessible devices. Details shall be designed for appearance as well as utility. Protruding members, joints, corners, gear covers, and the like, shall be finished in appearance. All exposed welds shall be ground smooth and the corners of structural shapes shall be mitered.

Equipment shall be of the approximate dimensions as indicated on the Plans or as specified, shall fit the spaces shown on the Plans with adequate clearances, and shall be capable of being handled through openings provided in the structure for this purpose. The equipment shall be of such design that piping and electrical connections, ductwork, and auxiliary equipment can be assembled and installed without causing major revisions to the location or arrangement of any of the facilities.

Machinery parts shall conform exactly to the dimensions shown on the working drawings. There shall be no more fitting or adjusting in setting up a machine than is necessary in assembling high grade apparatus of standard design. The equivalent parts of identical machines shall be made interchangeable. All grease lubricating fittings on equipment shall be of a uniform type. All machinery and equipment shall be safeguarded in accordance with the safety codes of the ANSI and applicable state and local codes.

G-4.02 MANUFACTURER

The names of proposed manufacturers, suppliers, material, and dealers who are to furnish materials, fixtures, equipment, appliances or other fittings shall be submitted to the Engineer for approval, as early as possible, to afford proper investigation and checking. Such approval must be obtained before shop drawings will be checked. No manufacturer will be approved for any materials to be furnished under this Contract unless he shall be of good reputation and have a plant of ample capacity. He shall, upon the request of the Engineer, be required to submit evidence that he has manufactured a similar product to the one specified and that it has been previously used for a like purpose for a sufficient length of time to demonstrate its satisfactory performance.

All transactions with the manufacturers or subcontractors shall be through the Contractor, unless the Contractor shall request, in writing to the Engineer, that the manufacturer or subcontractor deal directly with the Engineer. Any such transactions shall not in any way release the Contractor from his full responsibility under this Contract.

Any two or more pieces of material or equipment of the same kind, type or classification, and being used for identical types of service, shall be made by the same manufacturer.

G-4.03 REFERENCE TO STANDARDS

Whenever reference is made to the furnishing of materials or testing thereof to conform to the standards of any technical society, organization or body, it shall be construed to mean the latest standard, code, specification or tentative specification adopted and published at the date of advertisement for proposals, even though reference has been made to an earlier standard, and such standards are made a part hereof to the extent which is indicated or intended.

Reference to a technical society, organization or body may be made in the Specifications by abbreviations, in accordance with the following list:

AASHTO for American Association of State Highway and Transportation Officials (formerly AASHO)
ACI for American Concrete Institute
AGMA for American Gear Manufacturer's Association
AFBMA for Anti-Friction Bearing Manufacturer's Association
AISC for American Institute of Steel Construction
AISI for American Iron and Steel Institute
ANSI for American National Standards Institute
ASCE for American Society of Civil Engineers
ASTM for American Society for Testing and Materials
ASME for American Society of Mechanical Engineers
AWS for American Welding Society
AWWA for American Water Works Association
AWPA for American Wood Preservers Association
CEMA for Conveyor Equipment Manufacturers Association
CIPRA for Cast Iron Pipe Research Association
IEEE for Institute of Electrical and Electronic Engineers
IPCEA for Insulated Power Cable Engineers Association
NEC for National Electrical Code
NEMA for National Electrical Manufacturers Association
SAE for Society of Automotive Engineers
SHBI for Steel Heating Boiler Institute
Fed.Spec. for Federal Specifications
Navy Spec. for Navy Department Specifications
U.L.,Inc. for Underwriters' Laboratories, Inc.

When no reference is made to a code, standard or specification, the Standard Specifications of the ANSI, the ASME, the ASTM, the IEEE, or the NEMA shall govern.

G-4.04 SAMPLES

The Contractor shall, when required, submit to the Engineer for approval typical samples of materials and equipment. The samples shall be properly identified by tags and shall be submitted sufficiently in advance of the time when they are to be incorporated into the work, so that rejections thereof will not cause delay. A letter of transmittal, in duplicate, from the Contractor requesting approval must accompany all such samples.

G-4.05 EQUIVALENT QUALITY

Whenever, in the Contract Documents, an article, material, apparatus, equipment, or process is called for by trade name or by the name of a patentee, manufacturer, or dealer or by reference to catalogs of a manufacturer or dealer, it shall be understood as intending to mean and specify the article, material, apparatus, equipment or process designated, or any

equal thereto in quality, finish, design, efficiency, and durability and equally serviceable for the purposes for which it is intended.

Whenever material or equipment is submitted for approval as being equal to that specified, the decision as to whether or not such material or equipment is equal to that specified shall be made by the Engineer.

Upon rejection of any material or equipment submitted as the equivalent of that specifically named in the Contract, the Contractor shall immediately proceed to furnish the designated material or equipment.

Neither the approval by the Engineer of alternate material or equipment as being equivalent to that specified nor the furnishing of the material or equipment specified, shall in any way relieve the Contractor of responsibility for failure of the material or equipment, due to faulty design, material, or workmanship, to perform the functions required of them by the Specifications.

G-4.06 DELIVERY

The Contractor shall deliver materials in ample quantities to insure the most speedy and uninterrupted progress of the work so as to complete thw work within the allotted time. The Contractor shall also coordinate deliveries in order to avoid a delay in, or impediment of, the progress of the work of any related Contractor.

G-4.07 CARE AND PROTECTION

The Contractor shall be solely responsible for properly storing and protecting all materials, equipment, and work furnished under the Contract from the time such materials and equipment are delivered at the site of the work until final acceptance thereof. He shall, at all times, take necessary precautions to prevent injury or damage by water, freezing, or by inclemencies of the weather to such materials, equipment and work. All injury or damage to materials, equipment, or work resulting from any cause whatsoever shall be made good by the Contractor.

The Engineer shall, in all cases, determine the portion of the site to be used by the Contractor for storage, plant or for other purposes. If, however, it becomes necessary to remove and restack materials to avoid impeding the progress of any part of the work or interference with the work to be done by any other Contractor, the Contractor shall remove and restack such materials at his own expense.

G-4.08 TOOLS AND ACCESSORIES

The Contractor shall, unless otherwise stated in the Contract Documents, furnish with each type, kind or size of equipment, one complete set of suitably marked high grade special tools and appliances which may be needed to adjust, operate, maintain, or repair the equipment. Such tools and appliances shall be furnished in approved painted steel cases, properly labeled and equipped with good grade cylinder locks and duplicate keys.

Spare parts shall be furnished as specified.

Each piece of equipment shall be provided with a substantial nameplate, securely fastened in place and clearly inscribed with the manufacturer's name, year of manufacture, serial number, weight and principal rating data.

G-4.09 INSTALLATION OF EQUIPMENT

The Contractor shall have on hand sufficient proper equipment and machinery of ample capacity to facilitate the work and to handle all emergencies normally encountered in work of this character.

Equipment shall be erected in a neat and workmanlike manner on the foundations at the locations and elevations shown on the Plans, unless directed otherwise by the Engineer during installation. All equipment shall be correctly aligned, leveled and adjusted for satisfactory operation and shall be installed so that proper and necessary connections can be made readily between the various units.

The Contractor shall furnish, install and protect all necessary anchor and attachment bolts and all other appurtenances needed for the installation of the devices included in the equipment specified. Anchor bolts shall be as approved by the Engineer and made of ample size and strength for the purpose intended. Substantial templates and working drawings for installation shall be furnished.

The Contractor shall, at his own expense, furnish all materials and labor for, and shall properly bed in non-shrink grout, each piece of equipment on its supporting base that rests on masonry foundations. Grout shall completely fill the space between the equipment base and the foundation.

G-4.10 OPERATING INSTRUCTIONS

The Contractor, through qualified individuals, shall adequately instruct designated employees of the City in the operation and care of all equipment installed hereunder, except for equipment that may be furnished by the City.

The Contractor shall also furnish and deliver to the Engineer three complete sets for permanent files, identified in accordance with Subsection G-3.01 hereof, of instructions, technical bulletins and any other printed matter, such as diagrams, prints or drawings, containing full information required for the proper operation, maintenance, and repair, of the equipment installed and the ordering of spare parts, except for equipment that may be furnished by the City.

In addition to the above three copies, the Contractor shall furnish any additional copies that may be required for use during construction and start-up operations.

G-4.11 SERVICE OF MANUFACTURER'S ENGINEER

The Contract prices for equipment shall include the cost of furnishing a competent and experienced engineer or superintendent who shall represent the manufacturer and shall assist the Contractor, when required, to install, adjust, test and place in operation the equipment in conformity with the Contract Documents. After the equipment is placed in

permanent operation by the City, such engineer or superintendent shall make all adjustments and tests required by the Engineer to provide that such equipment is in proper and satisfactory operating condition, and shall instruct such personnel as may be designated by the City in the proper operation and maintenance of such equipment.

SECTION 5
INSPECTION AND TESTING

G-5.01 GENERAL
The Contractor's attention is hereby directed to Article 3.03 of the Agreement.

Inspection and testing of materials will be performed by the City unless otherwise specified.

For tests specified to be made by the Contractor, the testing personnel shall make the necessary inspections and tests and the reports thereof shall be in such form as will facilitate checking to determine compliance with the Contract Documents. Five copies of the reports shall be submitted and authoritative certification thereof must be furnished to the Engineer as a prerequisite for the acceptance of any material or equipment.

If, in the making of any test of any material or equipment, it is ascertained by the Engineer that the material or equipment does not comply with the Contract, the Contractor will be notified thereof and he will be directed to refrain from delivering said material and equipment, or to remove it promptly from the site or from the work and replace it with acceptable material, without cost to the City.

Tests of electrical and mechanical equipment and appliances shall be conducted in accordance with recognized test codes of the ANSI, ASME, or the IEEE, except as may otherwise be stated herein.

The Contractor shall be fully responsible for the proper operation of equipment during tests and instruction periods and shall neither have nor make any claim for damage which may occur to equipment prior to the time when the City formally takes over the operation thereof.

G-5.02 COSTS
All inspection and testing of materials furnished under this Contract will be performed by the City or duly authorized inspection engineers or inspection bureaus without cost to the Contractor, unless otherwise expressly specified.

The cost of shop and field tests of equipment and of certain other tests specifically called for in the Contract Documents shall be borne by the Contractor and such costs shall be deemed to be included in the contract price.

Materials and equipment submitted by the Contractor as the equivalent to those specifically named in the Contract may be tested by the City for compliance. The Contractor shall reimburse the City for the expenditures incurred in making such tests on materials and equipment which are rejected for noncompliance.

G-5.03 INSPECTIONS OF MATERIALS
The Contractor shall give notice, in writing to the Engineer, sufficiently in advance of his intention to commence the manufacture or preparation of materials especially manufactured or prepared for use in or as part of the permanent construction. Such notice shall contain a request for inspection, the date of commencement and the expected date of completion of the manufacture or preparation of materials. Upon receipt of such notice the Engineer will arrange to have a representative present at such times during the manufacture as may be necessary to inspect the materials or he will notify the Contractor that inspection will be made at a point other than the point of manufacture, or he will notify the Contractor that inspection will be waived. The Contractor must comply with these provisions before shipping any material. Such inspection shall not release the Contractor from the responsibility for furnishing materials meeting the requirements of the Contract Documents.

G-5.04 CERTIFICATE OF MANUFACTURE
When inspection is waived or when the Engineer so requires, the Contractor shall furnish to him authoritative evidence in the form of Certificates of Manufacture that the materials to be used in the work have been manufactured and tested in conformity with the Contract Documents. These certificates shall be notarized and shall include copies of the results of physical tests and chemical analyses, where necessary, that have been made directly on the product or on similar products of the manufacturer.

G-5.05 SHOP TESTS OF OPERATING EQUIPMENT
Each piece of equipment for which pressure, duty, capacity, rating, efficiency, performance, function, or special requirements are specified shall be tested in the shop of the maker in a manner which shall conclusively prove that its characteristics comply fully with the requirements of the Contract Documents. No such equipment shall be shipped to the work until the Engineer notifies the Contractor, in writing, that the results of such tests are acceptable.

Five copies of the manufacturer's actual test data and interpreted results thereof, accompanied by a certificate of authenticity sworn to by a responsible official of the manufacturing company, shall be forwarded to the Engineer for approval.

The cost of the shop tests and of furnishing manufacturer's preliminary and shop test data of operating equipment shall be borne by the Contractor.

G-5.06 PRELIMINARY FIELD TESTS
As soon as conditions permit, the Contractor shall furnish all labor, materials, and instruments and shall make preliminary field tests of equipment. If the preliminary field tests disclose any equipment furnished under this Contract which does not comply with the requirements of the Contract Documents, the Contractor shall, prior to the acceptance tests, make all changes, adjustments, and replacements required.

G-5.07 FINAL FIELD TESTS
Upon completion of the work and prior to final payment, all equipment and appliances installed under this Contract shall be subjected to acceptance tests as specified or required to prove compliance with the Contract Documents.

The Contractor shall furnish labor, fuel, energy, water and all other materials, equipment, and instruments necessary for all acceptance tests, at no additional cost to the City.

G-5.08 FAILURE OF TESTS
Any defects in the materials and equipment or their failure to meet the tests, guarantees or requirements of the Contract Documents shall be promptly corrected by the Contractor by replacements or otherwise. The decision of the Engineer as to whether or not the Contractor has fulfilled his obligations under the Contract shall be final and conclusive. If the Contractor fails to make those corrections or if the improved materials and equipment, when tested, shall again fail to meet the guarantees or specified requirements, the City, notwithstanding its partial payment for work, and materials and equipment, may reject the materials and equipment and may order the Contractor to remove them from the site at his own expense.

In case the City rejects any materials and equipment, then the Contractor shall replace the rejected materials and equipment within a reasonable time. If he fails to do so, the City may, after the expiration of a period of thirty calendar days after giving him notice in writing, proceed to replace such rejected materials and equipment, and the cost thereof shall be deducted from any compensation due or which may become due the Contractor under this Contract.

The City agrees to obtain other equipment within a reasonable time and the Contractor agrees that the City may use the equipment furnished by him without rental or other charges until the new equipment is obtained.

Materials or work in place that fails to pass acceptability tests shall be retested at the direction of the construction engineer all such retests shall be at the Contractor's expense. The rates charged shall be in accordance with the Department of Public Works current annual inspection contract which is available for inspection at the offices of the Department of Public Works.

G-5.09 FINAL INSPECTION
The procedures for final inspection shall be in accordance with the provisions of Article 4.07 of the Agreement. During such final inspections, the work shall be clean and free from water. In no case will the final estimate be prepared until the Contractor has complied with all the requirements set forth and the Engineer has made his final inspection of the entire work and is satisfied that the entire work is properly and satisfactorily cosntructed in accordance with the requirements of the Contract Documents.

SECTION 6

TEMPORARY STRUCTURES

G-6.01 GENERAL
All false work, scaffolding, ladders, hoistways, braces, pumping plants, shields, trestles, roadways, sheeting, centering forms, barricades, drains, flumes, and the like, any of which may be needed in the construction of any part of the work and which are not herein described or specified in detail, must be furnished, maintained and removed by the Contractor, and he shall be responsible for the safety and efficiency of such works and for any damages that may result from their failure or from their improper construction, maintenance, or operation.

G-6.02 PUBLIC ACCESS
At all points in the work where public access to any building, house, place of business, public road, or sidewalk would be obstructed by any action of the Contractor in executing the work required by this Contract, the Contractor shall provide such temporary structure, bridges or roadway as may be necessary to maintain public access at all times. At least one lane for vehicular traffic shall be maintained in streets in which the Contractor is working. Street closure permits are required from the Department of Public Works.

The Contractor shall provide suitable temporary bridges, as directed by the Engineer, at street intersections when necessary for the maintenance of vehicular and pedestrian traffic.

Prior to temporarily cutting of access to driveways and garages, the Contractor shall give twelve (12) hours notice to affected property owners. Interruptions to use of private driveways shall be kept to a minimum.

G-6.03 CONTRACTOR'S FIELD OFFICE
The Contractor shall erect, furnish and maintain a field office with a telephone at the site during the entire period of construction. He or an authorized agent shall be present at this office at all times while his work is in progress. Readily accessible copies of both the Contract Documents and the latest approved working drawings shall be kept at this field office.

G-6.04 TEMPORARY FENCE
If, during the course of the work, it is necessary to remove or disturb any fence or part thereof, the Contractor shall, at his own expense, if so ordered by the Engineer, provide a suitable temporary fence which shall be maintained until the permanent fence is replaced. The Engineer shall be solely responsible for the determination of the necessity for providing a temporary fence and the type of temporary fence to be used.

G-6.05 RESPONSIBILITY FOR TEMPORARY STRUCTURES
In accepting the Contract, the Contractor assumes full responsibility for the sufficiency and safety of all temporary structures or work and for any damage which may result from their failure or their improper construction, maintenance, or operation and will indemnify and save harmless the City from

all claims, suits or actions and damages or costs of every description arising by reason of failure to comply with the above provisions.

SECTION 7
TEMPORARY SERVICES

G-7.01 WATER
The Contractor shall provide the necessary water supply at his own expense. He shall, if necessary, provide and lay necessary waterlines from existing mains to the place of using, shall secure all necessary permits and pay for all taps to water mains or hydrants and for all water used at the established rates.

G-7.02 LIGHT AND POWER
The Contractor shall provide, at his own expense, temporary lighting and power facilities required for the proper prosecution and inspection of the work. If, in the opinion of the Engineer, these facilities are inadequate, the Contractor will not be permitted to proceed with any portion of the work affected thereby.

G-7.03 SANITARY REGULATIONS
The Contractor shall prohibit and prevent the committing of nuisances on the site of the work or on adjoining property and shall discharge any employee who violates this rule.

Ample washrooms and toilet facilities and a drinking water supply shall be furnished and maintained in strict conformity with the law by the Contractor for use by his employees.

G-7.04 ACCIDENT PREVENTION
Precautions shall be exercised at all times for the protection of persons and property. The safety provisions of applicable laws, building and construction codes shall be observed. The Contractor shall comply with the U. S. Department of Labor Safety and Health Regulations for construction promulgated under the Occupational Safety and Health Act of 1970 (PL 91-596), and under Section 107 of the Contract Work. Hours and Safety Standards Act (PL 91-54), except where state and local safety standards exceed the federal requirements and except where state safety standards have been approved by the Secretary of Labor in accordance with provisions of the Occupational Safety and Health Act.

G-7.05 FIRST AID
The Contractor shall keep upon the site, at each location where work is in progress, a completely equipped first aid kit and shall provide ready access thereto at all times when men are employed on the work.

G-7.06 HEATING
The Contractor shall provide temporary heat, at his own expense, whenever required on account of work being carried on during cold weather and to prevent freezing of water pipes and other damage to the work.

SECTION 8

LINES AND GRADES

G-8.01 GENERAL
All work done under this Contract shall be constructed in accordance with the lines and grades shown on the Plans, or as given by the Engineer. The full responsibility for keeping alignment and grade shall rest upon the Contractor.

The Engineer will establish bench marks and base line controlling points. Reference remarks for lines and grades as the work progresses will be located to cause as little inconvenience to the prosecution of the work as possible. The Contractor shall so place excavation and other materials as to cause no inconvenience in the use of the use of the reference marks provided. He shall remove any obstructions placed by him contrary to this provision.

G-8.02 SURVEYS
The Contractor shall furnish and maintain, at his own expense, stakes and other such materials, and give such assistance, including qualified helpers, as may be required by the Engineer for setting reference marks. The Contractor shall check such reference marks by such means as he may deem necessary and, before using them, shall call the Engineer's attention to any inaccuracies. The Contractor shall, at his own expense, establish all working or construction lines and grades as required from the reference marks set by the Engineer, and shall be solely responsible for the accuracy thereof. He shall, however, be subject to the check and review of the Engineer.

The Contractor shall keep the Engineer informed a reasonable time in advance as to his need for line and grade reference marks, in order that they may be furnished and all necessary measurements made for record and payment with the minimum of inconvenience to the Engineer or of delay to the Contractor.

It is the intention not to delay the work for the establishment of reference marks but, when necessary, working operations shall be suspended for such reasonable time as the Engineer may require for this purpose.

G-8.03 SAFEGUARDING MARKS
The Contractor shall safeguard all points, stakes, grade marks, monuments and bench marks made or established on the work, bear the cost of reestablishing them if disturbed, and bear the entire expense of rectifying work improperly installed due to not maintaining or protecting or to removing without authorization such established points, stakes and marks.

The Contractor shall safeguard all existing and known property corners, monuments and marks adjacent to but not related to the work and, if required, shall bear the cost of reestablishing them if disturbed or destroyed.

G-8.04 DATUM PLANE
All elevations indicated or specified refer to the Mean Sea Level Datum of the U.S.C. & G.S. (N.O.S.) which is 0.80 feet above the Mean Low Water Datum of the U. S. Army

Corps of Engineers.

SECTION 9
ADJACENT STRUCTURES AND LANDSCAPING

G-9.01 RESPONSIBILITY
The responsibility for removal, replacement, relocation, repair, rebuilding or protection of all public utility installations, including poles, tracks, pipes, wires, conduits, house service connections, vaults, manholes, sewers, traffic control and fire alarm signal circuit installations and other appurtenances and facilities shall be in accordance with G-1.02 and G-1.03.

The Contractor shall also be entirely responsible and liable for all damage or injury as a result of his operations to all other adjacent public and private property, structures of any kind and appurtenances thereto met with during the progress of the work. The cost of protection, replacement in their original locations and conditions or payment of damages for injuries to such adjacent public and private property and structures affected by the work, whether or not shown on the Plans, and the removal, relocation, and reconstruction of such items called for on the Plans or specified shall be included in the various Contract Items and no separate payment will be made therefor. Where such public and private property, structures of any kind and appurtenances thereto are not shown on the Plans and when, in the opinion of the Engineer, removal or relocation and reconstruction is necessary to avoid interference with the work, payment therefor will be made as provided for extra work in Article 7.02 of the Agreement.

G-9.02 PROTECTION OF TREES
All trees and shrubs shall be adequately protected by the Contractor with boxes or otherwise and, within the City of Tampa, in accordance with ordinances governing the protection of trees. No excavated materials shall be placed so as to injure such trees or shrubs. Trees or shrubs destroyed by negligence of the Contractor or his employees shall be replaced by him with new stock of similar size and age, at the proper season, and at the sole expense of the Contractor.

Beneath trees or other surface structures, where possible, pipelines may be built in short tunnels, backfilled with excavated materials, except as otherwise specified, or the trees or structures carefully supported and protected from damage.

The City may order the Contractor, for the convenience of the City, to remove trees along the line of trench excavation. If so ordered, the City will obtain any permits required for removal of trees. Such tree removal ordered shall be paid for under the appropriate Contract Items.

G-9.03 LAWN AREAS
Lawn areas shall be left in as good condition as before the starting of the work. Where sod is to be removed, it shall be carefully removed and later replaced, or the area where sod has been removed shall be restored with new sod in the manner described in the Technical Specifications section.

G-9.04 RESTORATION OF FENCES
Any fence, or part thereof, that is damaged or removed during the course of the work shall be replaced or repaired by the Contractor and shall be left in as good a condition as before the starting of the work. The manner in which the fence is repaired or replaced and the materials used in such work shall be subject to the approval of the Engineer. The cost of all labor, materials, equipment, and work for the replacement or repair of any fence shall be deemed included in the appropriate Contract Item or Items, or if no specific Item is provided therefor, as part of the overhead cost of the work, and no additional payment will be made therefor.

SECTION 10
PROTECTION OF WORK AND PUBLIC

G-10.01 TRAFFIC REGULATIONS
The Contractor shall arrange his work to comply with Article G-6.02. The work shall be done with the least possible inconvenience to the public and to that end the work may be confined by the Engineer to one block at a time.

G-10.02 BARRIERS AND LIGHTS
During the prosecution of the work, the Contractor shall put up and maintain at all times such barriers, and lights, as will effectually prevent accidents. The Contractor shall provide suitable barricades, red lights, "danger" or "caution" or "street closed" signs and watchmen at all places where the work causes obstructions to the normal traffic or constitutes in any way a hazard to the public. Such barriers and signs shall be constructed to State of Florida Department of Transportation standards and placed as recommended by the Traffic Division of the City's Department of Public Works.

No open fires will be permitted.

G-10.03 SMOKE PREVENTIONS
The Contractor shall use hard coal, coke, oil or gas as fuel for equipment generating steam. A strict compliance with ordinances regulating the production and emission of smoke will be required.

G-10.04 NOISE
The Contractor shall eliminate noise to as great an extent as practicable at all times. Air compressing plants shall be equipped with silencers and the exhaust of all gasoline motors or other power equipment shall be provided with mufflers. In the vicinity of hospitals and schools, special care shall be used to avoid noise or other nuisances. The Contractor shall strictly observe all local regulations and ordinances covering noise control.

Except in the event of an emergency, no work shall be done between the hours of 7:00 p.m. and 7:00 a.m., or on Sundays. If the proper and efficient prosecution of the work requires operations during the night, the written permission of the Engineer shall be obtained before starting such items of the work.

G-10.05 ACCESS TO PUBLIC SERVICES
Neither the materials excavated nor the materials or plant used in the construction of the work shall be so placed as to prevent free access to all fire hydrants, valves or manholes.

G-10.06 DUST PREVENTION
The Contractor shall prevent dust nuisance from his operations or from traffic by keeping the streets sprinkled with water at all times.

G-10.07 PRIVATE PROPERTY
The Contractor shall so conduct the work that no equipment, material, or debris will be placed or allowed to fall upon private property in the vicinity of the work unless he shall have obtained the owner's written consent thereto and shall have shown this consent to the Engineer.

SECTION 11
SLEEVES AND INSERTS

G-11.01 COORDINATION
When the Contract requires the placing of conduits, saddles, boxes, cabinets, sleeves, inserts, foundation bolts, anchors, and other like work in floors, roofs, or walls of buildings and structures, they shall be promptly installed in conformity with the construction program. The Contractor who erects the floors, roofs, and walls shall facilitate such work by fully cooperating with the Contractors responsible for installing such appurtenances. The Contractor responsible for installing such appurtenances shall arrange the work in strict conformity with the construction schedule and avoid interference with the work of other contractors.

G-11.02 OPENINGS TO BE PROVIDED
In the event timely delivery of sleeves and other materials cannot be made and to avoid delay, the affected Contractor may arrange to have boxes or other forms set at the locations where the appurtenances are to pass through or into the floors, roofs, walls, or other work. Upon the subsequent installation of these appurtenances, the Contractor erecting the structure shall fill around them with materials as required by the Contract. The necessary expenditures incurred for the boxing out and filling in shall be borne by the Contractor or Contractors required to furnish the sleeves and inserts. Formed openings and later installation of sleeves will not be permitted at locations subject to hydrostatic pressure.

SECTION 12
CUTTING AND PATCHING

G-12.01 GENERAL
The Contractor shall do all cutting, fitting, or patching of his portion of the work that may be required to make the several parts thereof join and coordinate in a manner satisfactory to the Engineer and in accordance with the Plans and Specifications. The work must be done by competent workmen skilled in the trade required by the restoration.

SECTION 13
CLEANING

G-13.01 DURING CONSTRUCTION
During construction of the work, the Contractor shall, at all times, keep the site of the work and adjacent premises as free from material, debris, and rubbish as is practicable and shall remove the same from any portion of the site if, in the opinion of the Engineer, such material, debris, or rubbish constitutes a nuisance or is objectionable.

The Contractor shall remove from the site all of his surplus materials and temporary structures when no further need therefor develops.

G-13.02 FINAL CLEANING
At the conclusion of the work, all erection plant, tools, temporary structures and materials belonging to the Contractor shall be promptly taken away, and he shall remove and promptly dispose of all water, dirt, rubbish or any other foreign substances.

The Contractor shall thoroughly clean all equipment and materials installed by him and shall deliver such materials and equipment undamaged in a bright, clean, polished, and new appearing condition.

SECTION 14
MISCELLANEOUS

G-14.01 PROTECTION AGAINST SILTATION AND BANK EROSION
The Contractor shall arrange his operations to minimize siltation and bank erosion on construction sites and on existing or proposed watercourses and drainage ditches.

G-14.02 EXISTING FACILITIES
The work shall be so conducted to maintain existing facilities in operation insofar as is possible. Work shall be scheduled to minimize bypassing during construction. Requirements and schedules of operations for maintaining existing facilities in service during construction shall be as described in the Special Provisions.

G-14.03 USE OF CHEMICALS
All chemicals used during project construction or furnished for project operation, whether herbicide, pesticide, disinfectant, polymer, reactant or of other classification, must show approval of either EPA or USDA. Use of all such chemicals and disposal of residues shall be in strict conformance with instructions.

* * * * * * *

SPECIFIC PROVISIONS

SP-1 Scope

The work included under these Contract Documents comprises the cleaning of approximately 16,200-ft gravity sewers ranging in size from 20-inch to 60-inch along the west side of the Hillsborough River from the Perry Siphon to the Krause Pumping Station and all miscellaneous and appurtenant work.

The Contractor shall furnish all labor, materials and equipment for the accomplishment of all work as described in the Specifications, as shown on the Plans and as directed by the Engineer in accordance with the obvious or expressed intent of the Contract.

SP-2 Permits

The City will obtain permits required from any State or County agencies having jurisdiction over the roadways and for any railroad or highway crossings shown on the Plans, if applicable. The Contractor shall be required to comply with all provisions of such permits regarding workmanship, schedules, maintenance of traffic, and notification of starting construction, pavement removal and replacement and other conditions under which the permit is issued.

The Contractor shall obtain all permits required to comply with SP-4.C Maintenance of Traffic, contained herein.

The Contractor shall have in his possession the proper license to perform the work before submittal of his bid and shall obtain any required City/County building permits and shall obtain and pay for all other licenses and authorizations required for the prosecution of the work, including the cost of all work performed in compliance with the terms and conditions of such permits, licenses and authorizations, whether by himself or others.

City permit fees will be paid by the City.

The Contractor shall require all subcontractors to be currently licensed by the City to perform the proposed work in their respective fields and to obtain permits for the execution of said work. All work shall be performed in accordance with the licenses, permits and the requirements of the current Building and Construction Regulations Chapter of the City of Tampa Code.

The Contractor is responsible to schedule and coordinate with the City Construction Services Division of the Department of Housing and Development Coordination all required inspections and tests for all phases of work to obtain final approval thereof.

The Contractor is encouraged to contact the City's Construction Services Division prior to commencement of work to ascertain their respective requirements.

SP-4.C Maintenance of Traffic

The Contractor shall arrange his work so that there will be as little disruption of traffic as possible.

At least three weeks before starting any work in City streets, the Contractor shall obtain a City of Tampa Street Closure Permit for any traffic lane or street closure within the City. The permit will establish the requirements for closures related to the number of lanes and time of day lanes or streets may be closed. If the Contractor proposes a complete street closure, a detailed traffic maintenance plan shall be submitted to the City of Tampa Traffic Engineering Division together with the application for the Street Closure Permit. The traffic maintenance plan shall include proposed detour routes and locations and descriptions of direction signs for the construction area and detour routes. Two approved copies of all Street Closure Permits shall be submitted to the Engineer before starting any work in City streets. No changes to approved Street Closure Permits will be permitted without prior approval by the City.

Except as otherwise permitted, two traffic lanes shall be kept open at all times.

The Contractor shall furnish and maintain all necessary signs, barricades, lights and flagmen necessary to control traffic and provide for safety to the public, all in compliance with the Florida Department of Transportation "Manual on Traffic Controls and Safe Practices for Street and Highway Construction, Maintenance and Utility Operations," with subsequent revisions and additions, and to the satisfaction of the Engineer.

The cost of maintaining traffic and of any additional earth excavation, selected fill, temporary wearing surface, temporary bridges, barricades, warning lights, flagmen, and like work required therefor shall be included under the various classified unit price Contract Items, or in the total Lump Sum Price, as applicable, and no additional payment with be made therefor.

SP-6 Environmental Protection

The Contractor will be held liable for the violation of any and all environmental regulations. Violation citations carry civil penalties and in the event of willful violation, criminal penalties. The fact that the permits are issued to the City does not relieve the Contractor in any way of his environmental obligations and responsibilities.

SP-8 Construction Start

Construction will not begin prior to receipt by the City of the required permits. If issuance of the Notice to Proceed is delayed due to permit acquisition, the contract time will be extended to suit, but no extra payment will be made to the Contractor.

SP-11 Construction Easements

In the event that, in the opinion of the Contractor, obtaining a temporary construction easement is necessary or desirable, it shall be the sole responsibility of the Contractor to obtain such easements from the Owner of the property. If such easements are obtained by the Contractor, they

shall contain provisions to hold the City harmless from any operations of the Contractor within the easement limits. The Contractor shall not conduct construction operations on private property outside the limits of any easement obtained by the City or of any City-owned right-of-way unless a copy of the temporary construction easement agreement is filed with the Engineer.

SP 12 Special Road Closure Requirements

For all proposed road and lane closures for this project and as part of the required on-line Accela permitting, the Contractor shall prepare and submit a maintenance of traffic (M.O.T.) plan detailing all proposed detoured traffic flow, signage and barricades to the City. The Contractor shall be responsible for obtaining all road and lane closure permits from the City of Tampa. Where applicable, MOT(s) shall conform to appropriate FDOT Traffic Control Drawings contained in the FDOT Design Standards (600 Series Index Numbers), most current edition.

The following table provides general guidelines for the allowable lane closures of the major roadways affected by this project. If additional lane closures are necessary to facilitate the work associated with this project, the Contractor shall submit the MOT reflecting the additional lane closures to the City, as describe above, for approval. The Contractor shall be fully responsible for the costs of the extra traffic control devices if additional lane closures are necessary to complete the work included in this project.

Location	**Type of Road**	**Allowable Lane Closures**
North Boulevard.	2 lane divided roadway with center turn lane	Close 1 lane and maintain 1 lane of traffic each direction (FDOT Index 624)
Cass Street	4 lane divided roadway with center turn lane	Close 1 to 2 of the eastbound lanes; shall maintain a minimum of 1 lane each direction (FDOT Index 623 or 624)
Kennedy Boulevard	4 lane, divided roadway	No lane shall be closed
W Cleveland Street	3 lane (one way westbound)	Close 1 westbound lane (FDOT Index 623)
W Brorein Street	3 lane (one way westbound)	Close 1 westbound lane (FDOT Index 623)

SP-13 Material and Equipment Approval

The Contractor shall not enter into any subcontracts, or place any order, for the furnishing of any material or equipment until he has received the Engineer's written approval of the

manufacturers.

SP-14 Contractor Emergency Response Time

The Contractor must be available to service emergency calls seven (7) days a week, twenty-four (24) hours a day. The response time for emergency calls shall be within two (2) hours. A contact person and telephone number shall be provided to the Engineer for such purposes.

SP-15 Contractor's Field Office

Delete Article G-6.03 Contractor's Field Office on Page G-14 from GENERAL PROVISIONS. The Contractor or an authorized agent shall be present at all times while his work is in progress. Readily accessible copies of both the contract documents and the latest approved working drawings shall be kept at the job site.

SP-23 Project Cleanup

Cleanup is extremely important and the Contractor will be responsible for keeping the construction site neat and clean with debris to be removed regularly as the work progresses.

SP-25 Work in Streets and Highways

All work within streets and highways shall be subject to the regulations and requirements of the appropriate agencies. Within the City of Tampa, streets and highways are under the jurisdiction of the City of Tampa, Department of Public Works or State of Florida, Department of Transportation. Outside the City of Tampa, streets and highways are under the jurisdiction of the County of Hillsborough or the State Department of Transportation.

Methods and materials of construction used in restoration within such streets and highways, including pavement, sidewalk, curb, curb and gutter removal and replacement, replacement of storm sewerage facilities, excavation and backfilling, and the storage of plant, materials and equipment shall conform to the requirements of the City of Tampa and, where applicable, the County of Hillsborough or State Department of Transportation, and will be subject to the inspection and approval of the duly authorized representatives of the City, County and the State.

SP-26 Surface Restoration

Where construction activities are conducted in existing grassed areas, the grassed areas shall be restored as specified or directed by sodding or grassing. Such restoration of grassed areas shall conform to the requirements of the Workmanship and Materials section headed "Lawn Replacement."

The Contractor shall replace or repair all ground surfaces damaged during construction. Any bushes, flowers, gardens, patios, or other landscaping and irrigation systems disturbed by the construction project shall be repaired or replaced by the Contractor. The cost of such ground surface repair shall be included in the various classified unit price Contract Items, or in the total Lump Sum Price, as applicable, and no separate payment will be made therefor.

SP-35 Work in Private Property

Where portions of the work are constructed in easements through private properties, the limits of such City-owned easements are as shown on the Plans.

Upon completion of work in City-owned easements, the Contractor shall restore the property, including all fences or other structures disturbed by his operations, as nearly as possible to the condition in which he found it. No material shall be used or removed from private property without the approval of the Engineer.

The Contractor shall confine his operation in such private properties within the limits of the easements as shown or directed by the Engineer.

The Contractor shall further comply with all provisions of the grants of the City-owned easement and shall assume full responsibility as the agent of the City for all obligations of the City under such grants of easement in connection with the construction of pipelines.

The Contractor shall not enter upon or occupy any private land outside of the limits of the City-owned easement unless a copy of the written consent of the Owner is filed with the Engineer. The Contractor shall conduct his operations along easements through private property so as not to damage the property and to interfere with its ordinary use as little as possible.

SP-60 Contingency

The Contractor shall include a Hundred Thousand Dollar ($100,000) contingency sum, to be included as part of the total bid amount for this contract. The contingency is for the purpose of compensating the Contractor for any incidental work that may arise as construction operations proceed and was not addressed as part of the original work portrayed in the Plans and Specifications.

The Hundred Thousand Dollar ($100,000) contingency sum if an upset limit. Any amount of the contingency shall be paid only after negotiation.

SP-63 Existing Sewage Flow (Krause Pump Station)

The flow data was obtained for use by the Wastewater Department and is believed to be reasonably accurate, but not guaranteed to be absolutely so, and is presented only as an approximation:

Low Flow	8 MGD
Dry Weather Average Daily Flow	12 MGD
Dry Weather Peak Flow	20 MGD
Rain Peak Flow	50 MGD

SP-68 Water

Delete Article G-7.01 Water and G-7.02 Light and Power on Page G-14 from GENERAL CONDITIONS. If necessary, the Contractor may use neighborhood hydrants from the City of Tampa; all costs related to that shall be the responsibility of the Contractor.

SP-72 Submittals / Request for Information / Shop Drawings

Contractor shall prepare and submit a minimum four (4) hardcopies and one (1) bookmarked, unsecured electronic portable document format (PDF) file for all Submittals, RFI, and Shop Drawings. The City will review the submittals and return one (1) hardcopy and PDF file of the marked up submittal to the contractor. The contractor shall have approved hard copies of all submittals at the job site. Each electronic submission must be in a high resolution color format and shall be original electronic documents from the manufacturer. Hardcopies shall be high quality printed in color. Scanned printouts or poor quality resolution PDF files will not be accepted.

SP-73 Work Directive Change

A Work Directive Change is a written directive to the Contractor, issued on or after the date of the execution of the Agreement, and signed by the Engineer on behalf of the City, ordering an addition, deletion or revision in the work, or responding to an emergency. A Work Directive Change will not change the contract price or the time for completion, but is evidence that the parties expect that the change directed or documented by an Authorization to Proceed with Extra Work letter will be incorporated in a subsequently issued Change Order following negotiations by the parties as to its effect, if any, on the contract price or the time for completion.

Without invalidating the Agreement, additions, deletions or revisions in the work may, at any time or from time to time, be authorized by a Change Order or a Work Directive Change. Upon receipt of any such document, the Contractor shall promptly proceed with the work involved.

SP-130 Safety:

A. Responsibility: Employees shall immediately report any unsafe work practice or unsafe condition to their supervisor(s). The Contractor is solely responsible for the safety of their workers, and shall comply with all applicable requirements [i.e.: 29 CFR 1910 -Occupational Safety and Health Standards, 29 CFR 1926 - Safety and Health Regulations for Construction, etc] and industry safety standards while at the work site. The fact that City personnel may bring unsafe conditions to the attention of any member of the Contractors work force does not relieve the Contractor of this responsibility.

Suggest, all Contractors employees and sub-contractors be given a copy of SP-130.

The Contractor shall have a designated Safety Officer within his organization. At the Pre-Construction meeting, the Contractor shall provide the name and contact information of the

Safety Officer to the Engineer.

At the Pre-Construction meeting, the Contractor will be given pertinent safety related information, necessary forms and instructions (i.e.: AWTP Lockout/Tagout Procedures, AWTP Hot Work Permits, etc) that pertain to any work that might be utilized during the contract. The Contractor shall be responsible to disseminate that information to their employees and sub-contractors. Special care shall be taken by the Contractor to ensure that any new employee or sub-contractor to the work site shall be briefed on these safety instructions.

If warranted by the project and directed by the Engineer, the Contractor shall develop and implement a comprehensive health and safety plan for their employees that will cover all aspects of onsite construction operations and activities associated with the contract. This plan must comply with all applicable health and safety regulations and any project specific requirements that the contract has specified.

B. Incident Reporting: All accidents that result in personal injury, illness or property damage shall be immediately reported and investigated, regardless of the extent of injury, illness or property damage. Employees must report accidents within one hour (or as soon as practical) from the time of occurrence to their immediate supervisor who in turn will report it to the City's inspector. The City inspector will record the incident in their daily report and report it to the Risk Management Division (274-5708).

C. Air-Borne Debris: All personnel in close proximity to drilling, sawing, sanding, scraping, spraying, power-washing or other work being done, either in enclosed spaces or in the open, that creates dust or air-borne debris shall wear eye protection [29 CFR 1910.133] and a respirator [29 CFR 1910.134].

D. Hot Work: All welding, soldering, brazing, acetylene cutting or any other work at the AWTP or any pump station; that produces high temperatures shall require a AWTP "Hot Work Permit" and may require one or more fire watches. The number and location of fire watches (if any) shall be a condition of the Hot Work Permit. A current, portable, fully charged fire extinguisher shall be located with each person performing hot work and each fire watch. The Hot Work Permit shall be signed off by the appropriate personnel and maintained in the project file.

E. Confined Spaces: OSHA defines a confined space as having limited or restricted means for entry or exit, and is not designed for continuous employee occupancy. Confined spaces include, but are not limited to: vaults, tanks, manholes, wet-wells, pipelines, utility tunnels, etc.

The Contractor shall take measures [29 CFR 1910.146 (c)(5)] to ensure that atmospheric conditions in confined spaces are not hazardous to occupants. This can be accomplished by forcing a sufficient amount of clean air through the confined space and testing the atmosphere by using a portable certified, calibrated, atmosphere monitor that meets OSHA requirements [29 CFR 1910.146(c)(5)(ii)(C)]. The atmosphere monitor should record oxygen content, flammable gases and vapors and toxic air contaminants, such as the Industrial Scientific TMX-412.

F. Air-Borne Gases: The AWTP is located in an industrial area and as such there are several different substances, either on or off site, that can escape and become dangerous fumes such as: chlorine, methanol, anhydrous ammonia, etc. The AWTP currently has nine (9) Shelter In Place (SIP) locations that are designated as safe havens in the event of release of hazardous gases. These SIP's are stocked with necessary instructions and supplies to protect City and any Contractor's personnel.

The first day on site, City personnel will show all the Contractor's personnel present where the several closest SIP's are located, explain the alarm signals and provide the current alarm testing schedule. It shall be the Contractor's responsibility to show any future employee and/or sub-contractor that comes on site the location of the SIP's and explain the alarm signals.

In the event of an alarm, the Contractor's personnel shall immediately and hastily proceed to the nearest SIP along with the City personnel and remain there until further notice, taking guidance from and following the instruction of the senior City employee present.

G. Lockout / Tagout Policy: The AWTP Lockout / Tagout program is designed to set standards to help safeguard all employees from hazardous electrical or mechanical energy while they are performing service or maintenance on machines and equipment at the AWTP or any pump station. This program will also identify the practices and procedures to shut down and Lockout or Tagout machines and equipment. The Contractor shall be given a copy of the AWTP "LOCKOUT / TAGOUT POLICY AND PROCEDURES" instruction and shall make all of his employees and sub-contractors aware of this program.

No padlock (lockout) shall be removed except by the individual that installed it or if not available, by a City of Tampa AWTP team leader.

No tag (tagout) shall be removed except by the individual that installed it or if not available, by a City of Tampa AWTP team leader, except in an Emergency and the tag states "Do Not Use Unless in an Emergency". In that event, the Contractor shall notify the City of Tampa AWTP team leader, who will prepare the necessary follow up report.

H. Trench Safety: Any excavation deeper than four (4) feet shall adhere to the requirements contained in 29 CFR 1926.650 thru 652 and the Florida Trench Safety Act [Florida Statutes, ss 553.60 - 553.64].

I. Open Flames: No fires shall be allowed. No open flames necessary for any construction activity shall ever be left un-attended. A current, portable, fully charged fire extinguisher shall be located with each activity requiring an open flame.

J. Sparks: Any activity lasting more than 10 continuous minutes, that creates sparks, such as grinding or chipping shall have a dedicated fire watch in attendance. A current, portable, fully charged fire extinguisher shall be located with each activity creating sparks, regardless if a fire watch is required or not.

K. First Aid: The Contractor shall furnish appropriate First Aid Kits [29 CFR 1910.151] and shall be responsible to ensure his employees are properly trained to render first aid. If

injurious corrosive materials are to be utilized, eye wash and body wash facilities must be provided in the immediate area.

L. Related Costs: All costs associated with these or any safety measures shall be included in the total lump sum contract price or the various contract item unit prices, as applicable, and no separate payment shall be made thereof.

SP-133 Tampa Port Authority Access

The Tampa Port Authority has restricted access in accordance with Florida Statute 311.12. Refer to the Tampa Port Authority's website for procedures on gaining access to the port. https://www.tampaport.com/about-port-tampa-bay/operations/security.aspx. The Port's Security and Operations departments are located in the Port Tampa Bay Security Operations Building (SOC) located at 2002 Maritime Blvd., Tampa, Florida 33605. All costs to comply with these procedures shall be included in the total Price for this project, and no separate payment shall be made therefore.

SP-134 Cleaning

The cleaning method to be employed shall be a combination of hydraulic high volume water and solids separation closed loop system. Bypass of sewer flow will not be allowed to be performed at any time. Proper capture of debris at the extraction point shall be performed to prevent debris collecting downstream and causing a blockage.

SP-135 Inspecting Pipe Line

In order to maximize the hydraulic capacity of the pipeline, at least 95% at any given diameter of the pipe line shall be restored. After the pipe line has been cleaned, the Contractor shall perform combined underwater sonar/closed circuit television (CCTV) of all semi-surcharged pipe lines to provide a simultaneous composite image of the pipe both above and below the waterline. The inspection shall also include a condition assessment following PACP defect coding. Sonar inspection shall be utilized where fully surcharged pipelines or inverted siphons are present to obtain uninterrupted 360 degrees profile images of the internal surface.

* * *

City of Tampa – DMI Sub-(Contractors/Consultants/Suppliers) Payments

(FORM MBD-30)

[ ] Partial [ ] Final

Contract No.: _____ WO#,(if any):_____ Contract Name:_____

Contractor Name:_____ Address:_____

Federal ID:_____ Phone:_____ Fax:_____ Email:_____

GC Pay Period:_____ Payment Request/Invoice Number:_____ City Department:_____

Total Amount Requested for pay period: $_____ Total Contract Amount(including change orders):$_____

-Type of Ownership - (F=Female M=Male), BF BM = African Am., HF HM = Hispanic Am., AF AM = Asian Am., NF NM = Native Am., CF CM = Caucasian S = SLBE

Type Trade/Work Activity []Sub []Supplier Federal ID	Company Name Address Phone & Fax	Total Sub Contract Or PO Amount	Amount Paid To Date Amount Pending Previously Reported	Amount To Be Paid For This Period Sub Pay Period Ending Date
			$	$
			$	$
			$	$
			$	$
			$	$
			$	$

(Modifying This Form or Failure to Complete and Sign May Result in Non-Compliance)

Certification: I hereby certify that the above information is a true and accurate account of payments to sub – contractors/consultants on this contract.

Signed:_____ Name/Title:_____ Date:_____

 Note: Detailed Instructions for completing this form are on the next page

Page 2 of 2 – DMI Payment

Instructions for completing The DMI Sub-(Contractors/Consultants/ Suppliers) Payment Form

(Form MBD-30)

This form must be submitted with all invoicing or payment requests where there has been subcontracting rendered for the pay period. If applicable, after payment has been made to the subcontractor, "Waiver and Release of Lien upon Progress Payment", "Affidavit of Contractor in Connection with Final Payment", or an affidavit of payment must be submitted with the amount paid for the pay period. The following will detail what data is required for this form. The instructions that follow correspond to the headings on the form required to be completed. **(Modifying or omitted information from this form my result in non-compliance).**

- **Contract No.** This is the number assigned by the City of Tampa for the bid or proposal.
- **W.O.#** If the report covers a work order number (W.O.#) for the contract, please indicate it in that space.
- **Contract Name.** This is the name of the contract assigned by the City of Tampa for the bid or proposal.
- **Contractor Name.** The name of your business.
- **Address.** The physical address of your business.
- **Federal ID.** A number assigned to a business for tax reporting purposes.
- **Phone.** Telephone number to contact business.
- **Fax.** Fax number for business.
- **Email.** Provide email address for electronic correspondence.
- **Pay Period.** Provide start and finish dates for pay period. (e.g. 05/01/13 – 05/31/13)
- **Payment Request/Invoice Number.** Provide sequence number for payment requests. (ex. Payment one, write 1 in space, payment three, write 3 in space provided.)
- **City Department**. The City of Tampa department to which the contract pertains.
- **Total Amount Requested for pay period.** Provide all dollars you are expecting to receive for the pay period.
- **Total Contract Amount (including change orders).** Provide expected total contract amount. This includes any change orders that may increase or decrease the original contract amount.
- **Signed/Name/Title/Date**. This is your certification that the information provided on the form is accurate.
- **See attached documents.** Check if you have provided any additional documentation relating to the payment data. Located at the bottom middle of the form.
- **Partial Payment.** Check if the payment period is a partial payment, not a final payment. Located at the top right of the form.
- **Final Payment.** Check of this period is the final payment period. Located at the top right of the form.

The following instructions are for information of any and all subcontractors used for the pay period.

- **(Type) of Ownership.** Indicate the Ethnicity and Gender of the owner of the subcontracting business or SLBE.
- **Trade/Work Activity.** Indicate the trade, service, or material provided by the subcontractor.
- **SubContractor/SubConsultant/Supplier.** Please indicate status of firm on this contract.
- **Federal ID.** A number assigned to a business for tax reporting purposes. This information is critical in proper identification of the subcontractor.
- **Company Name, Address, Phone & Fax**. Provide company information for verification of payments.
- **Total Subcontract Amount.** Provide total amount of subcontract for subcontractor including change orders.
- **Amount Paid To Date.** Indicate all dollars paid to date for the subcontractor.
- **Amount Pending, Previously Reported.** Indicate any amount previously reported that payments are pending.
- **Amount To Be Paid for this Period.** Provide dollar amount of dollars requested for the pay period.
- **Sub Pay Period Ending Date.** Provide date for which subcontractor invoiced performed work.

Forms must be signed and dated or will be considered incomplete. The company authorized representative must sign and certify the information is true and accurate. Failure to sign this document or return the document unsigned can be cause for determining a company is in non-compliance of Ordinance 2008-89.

If any additional information is required or you have any questions, you may call the Minority Business Development Office at (813) 274-5522.

SIGN EXAMPLE ONLY GRAPHIC TO BE DEVELOPED BY CONTRACTOR

scale: 3" 3"

Sign Information

Building a Better Tampa

David L. Tippin Water Treatment Facility
Caustic Soda Piping Improvements

Project provides for improvements at the David L. Tippin Water Treatment Facility to improve the reliability and safety of the Sodium Hydroxide System of the water distribution system within the facility.

$TBD investment
Scheduled for completion in TBD 2014

TBD

Colors

Blue: Sherwin Williams Naval SW6244
Green: Sherwin Williams Center Stage SW6920
White: Sherwin Williams Pure White SW7005

Font

Franklin Gothic

K:\CA\edr\dpw project sign 4-28-04.dwg, 08/22/2005 12:32:38 PM, pw1m

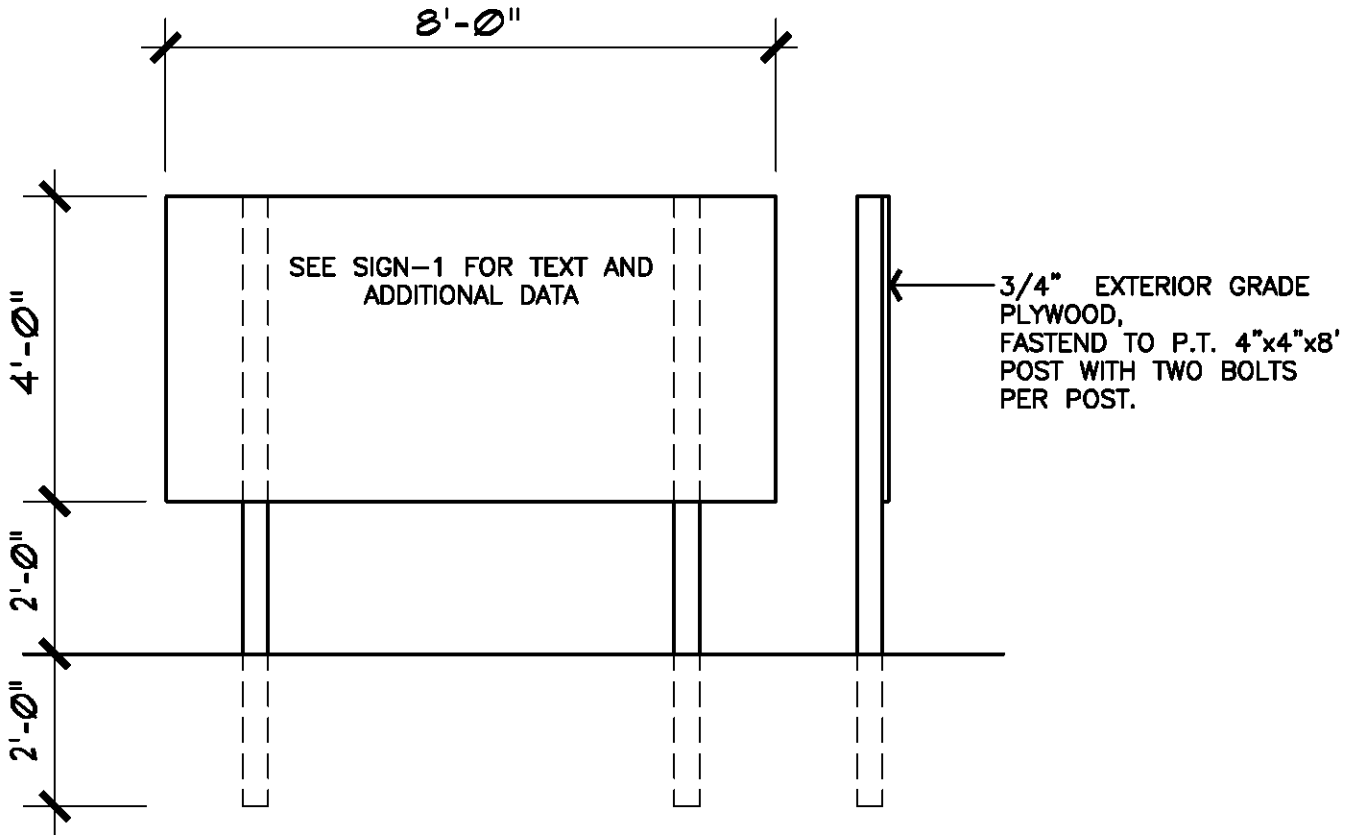

CITY OF TAMPA–PROJECT SIGN
REVISED 4/28/04

SIGN – 2

SECTION 17 - LAWN REPLACEMENT AND SODDING

W-17.01 General

The Contractor shall replace all lawn areas which have been removed or damaged due to construction. Lawn replacement includes fine grading the areas to be restored and furnishing and placing topsoil, fertilizer, sod, sprigs, seeding, and maintaining all areas. Grassing and mulching or sodding lawn areas will be required as directed. Grassing shall be accomplished by seeding.

Sod shall be Argentine Bahia, St. Augustine, or other approved native grass sod, and shall be well matted with grass roots. It shall be sufficiently thick to secure a dense stand of live grass, with a minimum thickness of 2 inches. The sod shall be live, fresh and uninjured, and shall contain sufficient moisture at the time of planting to induce growth. The type and quality of sod shall be approved by the Engineer before placing.

Grass seed shall be Argentine Bahia, 60 #/acre from March 1 to November 1; 50 #/acre with 20 #/acre of rye grass seed from November 1 to March 1. Argentine Bahia seed shall be a scarified seed having a minimum active germination of 40% and total of 85%.

Mulch material shall be free of weeds and shall be oat straw or rye, Pangola, peanut, Coastal Bermuda or Bahia grass hay.

W-17.02 Topsoil

Where areas are to be restored by sodding, topsoil shall be placed to a minimum compacted depth of 2 inches over the subgrade. Where areas are to be restored by grassing, topsoil shall be placed to a minimum compacted depth of 4 inches over the subgrade. All topsoil shall be suitable excavated topsoil which has been segregated or other topsoil material approved by the Engineer. Topsoil shall be free from stones, roots, sticks, or other foreign substances.

W-17.03 Water

The Contractor shall furnish at his own expense all water required for lawn replacement and maintenance of the work until final acceptance.

W-17.04 Construction Methods

Prior to sodding or grassing, the Contractor shall fine grade the subgrade to 4 inches below finished grade. Topsoil shall be spread over the subgrade to a uniform depth and density. Topsoil shall be uniformly compacted by a light hand roller weighing between 250 and 750 pounds to the specified depths for sodding or grassing.

Immediately before sodding, 14-4-14 or 15-0-15 fertilizer shall be applied at the rate of approximately 600 pounds per acre, either in the furrows or by broadcasting and raking, into the planting area. After the surface has been properly prepared, the sod shall be placed and firmly embedded by light tamping. Additionally, dolomite (lime) shall be applied at a rate of 2 tons per acre.

Immediately after the sod has been planted, if the soil does not contain sufficient moisture to ensure growth, water shall be applied twice daily for the first week, once in the morning or late evening and once at approximately 2:00 P.M. Water shall then be applied once a day over the next 2 weeks and alternating days for an additional 2 weeks. If rooting has not taken place by the end of the third week, 1 daily watering shall continue until sod is firmly rooted.

One week after the sod has been planted, a complete fertilizer with minor elements shall be applied weekly at the rate of 1# nitrogen per 1,000 square foot in a 2-1-2 or 4-1-2 formula for a period of 4 weeks, and thereafter every 2 weeks for an additional 30 days. The ground shall not be wet when the fertilizer is applied but will be immediately watered after application of the fertilizer to remove it from the leaf area.

Prior to grassing, 14-4-14 or 15-0-15 fertilizer shall be applied to the soil at the rate of approximately 300 pounds per acre. Grass seed at the specified rate per acre shall then be raked into the soil and covered with mulching material. The area shall then be thoroughly rolled with approved equipment.

After the grass has been planted, if the soil does not contain sufficient moisture to ensure growth, water shall be applied as directed by the Engineer. After the grass has started growing, fertilizer shall be applied uniformly over the area weekly, at a rate of 0.5# nitrogen and potash per 1,000 square feet, until turf cover the area. The fertilizer shall not be applied unless the surface of the ground or sod is sufficiently moist to quickly dissolve the fertilizer.

W-17.05 Caretaking

The Contractor shall keep all replaced lawn areas in good, healthy, insect free, moist condition by watering, replanting or resodding, weeding, fertilizing, and cutting as specified, and directed by the Engineer.

* * *

SECTION 20 - MAINTAINING EXISTING SANITARY SEWER IN OPERATION

W-20.01 General

It shall be the Contractor's responsibility to preserve all existing sanitary sewer services without interruption while performing the work included in this project. The Contractor shall furnish all labor, materials, and equipment required to clean the sewers in operating conditions. Also, if deemed necessary by the engineer, the contractor will be responsible to provide necessary noise suppression devices to minimize equipment noise.

The Contractor shall not be permitted to pump or otherwise direct the flow of sanitary sewage into storm sewers, streams, or other open channels or onto streets or alleys at any time during the course of the work.

W-20.02 Bypass Pumping

The Contractor shall not performed bypass of sewer at any time.

W-20.03 Connections

All house laterals and connections to lateral sewers shall be maintained in operation without leakage or backup during the work.

W-20.04 Street Closures

The Contractor shall be responsible for coordination of maintenance of traffic and all street closures with the City of Tampa, Department of Public Works; Hillsborough County, Superintendent of Maintenance; and the State of Florida, Department of Transportation.

W-20.05 Cleanup

When the repair or reconstruction has been completed, all temporary connections and bulkheads shall be removed. Sewers shall be cleaned of all settled solids.

* * *

SECTION 70 – LARGE PIPE DIAMETER CLEANING

W-70.01 Intent

The intent of large pipe diameter cleaning is to remove foreign materials from the pipelines and restore the sewer line to a minimum of 95% of the original capacity of the pipe. Additionally, the pipelines shall be adequately clean to provide unobstructed view of the entire pipe by a sonar/closed-circuit television inspection to discern all pipe defects.

It is recognized that there are some conditions such as broken pipe and major blockages that prevent cleaning from being accomplished or where additional damage would result if cleaning were attempted or continued. Should such conditions be encountered, the Contractor will not be required to clean those specific sections of the sewer. Low spots, sags, bellies in the pipeline are conditions that do not exempt the Contractor from meeting the requirements of the specifications.

W-70.02 Cleaning Equipment

For large pipe diameter cleaning, a combination of hydraulic high volume water and solids separation system closed loop shall be used. Flow rate shall be a minimum of 250 GPM at 2,000 PSI to move solids to the downstream manhole in high flow conditions. The separation system will dewater solids to 95% (passing a paint filter test) and transfer them to a dump truck for transport to the Howard F. Curren AWT Plant. All sewers shall be cleaned in operating conditions. The unit shall be capable of 24 hour operation and the unit shall not leave the manhole until a section is fully cleaned.

When possible, the flow of sewage in the sewer shall be utilized to operate the pump. If hydrants are required, the location and the layout of supply hoses from the hydrant are to be described in the project submittals. In addition, an estimate of water to be consumed (Total Gallons) per day from the hydrant to complete the project shall be provided. The Contractor shall be fully responsible for obtaining the appropriate permits, a certified hydrant meter and backflow preventer from the City of Tampa Water Department. Water usage fees will be the Contractor responsibility. Water shall be conserved and not used unnecessarily. No fire hydrant shall be obstructed in case of a fire in the area served by the hydrant. Special effort should be taken so that supply hoses will not cross lanes of traffic.

W-70.03 Cleaning Precautions

During sewer cleaning operations, satisfactory precautions shall be taken in the use of cleaning equipment. Noise and odors emissions shall be eliminated or minimized. No bypassing of sewer flows will be necessary. Proper capture of debris at the extraction point shall be performed to prevent debris collecting downstream and causing a blockage. If during a rain event, elevated sewer levels are experienced, cleaning shall be suspended.

W-70.04 Sewer Cleaning

The designated sewer manhole sections shall be cleaned using a combination of hydraulic high volume water and solids separation closed loop system. Bypass of sewer flow will not be allowed to be performed at any time. The equipment shall be capable of removing dirt, grease, rocks, sand, and other materials and obstructions from the sewer lines and manholes.

W-70.05 Contractor Qualifications

The Contractor shall provide firm's experience and at least three (3) references for similar projects firm has successfully performed within the last two years. Include the following information:

a. Each project or contract name.

b. Name of contracting company and government agency.

c. Contact person's name, position, and telephone number.

d. Dates of projects.

e. Status or comments

All personnel, including sub-contractors, proposed to participate in this project shall be identified and their experience highlighted. The proposed project manager who will interact with the City staff shall be identified.

W-70.06 Material Removal

All sludge, dirt, sand, rocks, grease, and other solid or semisolid material resulting from the cleaning operation shall be removed at the downstream manhole of the section being cleaned. Passing material from manhole section to manhole section, which could cause line stoppages, accumulations of sand in wet wells, or damage pumping equipment, shall not be permitted.

W-70.07 Disposal of Materials

All solids resulting from the cleaning operations shall be removed from the site and disposed of at a site designated by the Engineer. All materials shall be removed from the site no less often than at the end of each workday. Under NO circumstances will the Contractor be allowed to accumulate debris, etc., on the site of work beyond the stated time, except in totally enclosed containers and as approved by the Engineer.

Contractor shall keep his haul route and work area(s) neat, clean, and reasonably free of odor, and shall bear all responsibility for the cleanup of any spill.

W-70.08 Final Acceptance

Acceptance of sewer line cleaning shall be made upon the successful completion of the sonar/television inspection and shall be to the satisfaction of the Engineer. If sonar/CCTV inspection shows the cleaning to be unsatisfactory, the Contractor shall be required to re-clean and re-inspect the sewer line at no additional cost to the City until the cleaning is shown to be satisfactory.

* * *

SECTION 72 – SONAR/CLOSED CIRCUIT TELEVISION (CCTV) INSPECTION

W-72.01 General

Sonar inspection of the gravity sewer shall be performed below the water line to provide accurate data on the internal pipe surface condition and shall include, but not be limited to, dimensional data on silt level, grease accumulation, pipe deformation and offsets. Sonar inspection shall be utilized where fully surcharged pipelines or inverted siphons are present to obtain uninterrupted 360 degrees profile images of the internal surface.

Television inspections of gravity sewers shall be performed above the waterline by means of a radial view closed-circuit color television camera to provide a comprehensive structural and hydraulic condition assessment and shall follow the NASSCO's Pipe Assessment Certification Program (PACP). CCTV inspection shall be utilized when low or no flow conditions are present to allow the full circumferential view of the pipe and identification of pipe defects.

Combined Sonar and CCTV inspection shall be performed to inspect and assess large diameter sewers where semi-surcharged conditions are present. The inspection provides a simultaneous composite image of the pipe both above and below the waterline allowing a visual inspection of the entire circumference of the pipe along the length of the pipeline.

Contractor shall perform the inspection work from the upstream to downstream and one manhole section at a time.

W-72.02 Contractor Qualifications

The Contractor shall provide at least three (3) copies of a sample video (DVD, CD or External Hard Drive) of a sewer inspection and a hardcopy of the corresponding inspection log.

W-72.03 Inspection Equipment

The Sonar equipment used for the sewer inspection is a scanner and shall be placed in a rig configured to the size of the sewer, a tow cable is used to advance the rig and Sonar through the sewer, and an umbilical cable provides communication with the control and monitoring computer at the surface. When used in conjunction with CCTV equipment the Sonar is suspended in the sewage below the rig. This combination of equipment can be either crawler, skid or float mounted dependent on pipeline diameter and flow depth.

The television camera used for the inspection shall be specifically designed and constructed for inspections of pipelines. The camera shall be capable of providing a radial view for inspection of the top, bottom, and sides of pipe and for looking up lateral connections. The camera shall be mounted on adjustable skids, or self propelled, to keep it in the center of the pipe. Lighting of the camera shall be supplied by a lamp on the camera, capable of being dimmed or brightened remotely from the control panel. The lighting system shall be capable of lighting the entire periphery of the pipe. The camera shall be operative in 100% humidity conditions and shall have

a minimum of 650 lines of resolution. The camera, television monitor, recording devices, and other components of the video system shall be capable of producing a picture quality satisfactory to the Engineer.

The camera shall be moved through the line in either direction at a moderate rate, stopping when necessary to permit proper documentation of the sewer's condition. In no case will the television camera be pulled at a speed greater than 30 feet per minute. Manual winches, power winches, TV cable, and powered rewinds or other devices that do not obstruct the camera view or interfere with proper documentation of the sewer conditions shall be used to move the camera through the pipeline. If, during the inspection operation, the television camera will not pass through the entire manhole section, the Contractor shall set up his equipment so that the inspection can be performed from the opposite manhole. If, again, the camera fails to pass through the entire sewer section, the Contractor shall immediately report this information to the City.

When manually operated winches are used to pull the television camera through the line telephones or other suitable means of communication shall be set up between the two manholes of the section being inspected to ensure good communications between members of the crew.

W-72.04 Measurements

The importance of accurate distance measurements is emphasized. A distance meter shall be used for accurately recording the location of defects and key features along the pipeline. The distance meter shall be a direct reading, above ground, friction clamp device or other suitable equipment. Marking on the cable, or the like, which would require interpolation for depth of manhole, will not be allowed. The meter shall be capable of reducing readings for reverse movement of the camera and shall be capable of being manually re-zeroed for each new setup. The importance of accurate distance measurements is vital. Accuracy of the measurement meter shall be checked daily by use of a walking meter, roll-a-tape, or other suitable device. Footage measurements shall begin at the centerline of the starting manhole and end at the centerline of the ending manhole. Footage shall be shown on the video view and recorded at all times.

W-72.05 Documentation of Inspection

Written sonar/CCTV inspection reports shall be provided for each line segment inspected to document internal pipe surface and defects and key features along the pipeline. The National Association of Sewer Service Companies (NASSCO) coding system shall be used. Information that should be included in the inspection logs is indicated below. One (1) copy of these records shall be supplied to the City.

Video recordings shall also be supplied to provide a visual and audio record of the sonar/CCTV inspection. Video playback shall be at the same speed that it was recorded. A complete recording shall be made of each line inspected. A voice recording shall be included that provides brief and informative comments on the sewer conditions. **All television inspection videos shall be in DVD format. Video tapes in VHS format will not be accepted.** The video file shall be an MPEG4 viewing format and compatible with viewing in Microsoft Windows Media Player.

Inspection reports shall use NASSCO standard coding system and shall include, but not be limited to, the following information:

- Date, time, city, street, name of operator, inspector, and weather conditions.
- Pipe diameter, pipe material, section length, depth of pipe, length between joints, and corresponding video recording identification.
- Location of each point of leakage.
- Location of each service connection.
- Location of any damaged sections, nature of damage, and location with respect to pipe axis.
- Deflection in alignment of grade of pipe.

Video recordings shall include written information on the screen and an audio recording describing the inspection and findings. The DVD shall be labeled with information on the location of the inspection, description of the pipelines, date, inspection company, and other information to identify the inspections included on the DVD. The following information shall be included in video:

Visual (on screen in corner):

- Report number.
- Date of television inspection.
- Sewer section and number.
- Pipe size and material
- Distance along reach (tape counter footage).

Audio:

- Date and time of sonar/CCTV inspection, operator name, name of overlying or adjacent street, and manhole numbers.
- Verbal confirmation of sewer section and television direction in relation to direction of flow.
- Verbal description of pipe size, type, and pipe joint length.
- Verbal description and location of each service connection and pipe defect.

SECTION 113 - DISPOSAL OF DEBRIS

W-113.01 General

The Contractor shall furnish all labor, materials, and equipment required to remove, dewater and transport and dispose of debris removed from all pipelines and structures. Debris shall be defined as all material existing in the pipeline for which removal is required to provide a clean pipeline.

W-113.02 Scope of Work

The Contractor will be permitted to transport and temporarily store debris at the Howard F. Curren Advanced Wastewater Treatment Plant (HFC AWTP) at 2700 Maritime Boulevard between the hours of 6:00 a.m. to 6:00 p.m., as directed by the Engineer. After the completion of the work, but no longer than 30 calendar days, the Contractor will be responsible for hauling the stored debris from the Treatment Plant to an approved disposal site. The Contractor shall coordinate to have the City load the dried material from the drying beds into the truck. This loading process shall occur between the hours of 7:00 a.m. to 3:30 p.m. Monday- Friday, as directed by the Engineer. Final payment will not be issued until the debris is entirely removed from the temporary storage area. The Contractor shall be paid per ton of dried debris removed from the drying beds and delivered to the land fill as measured by truck weight tickets. The City does not guarantee the actual amount of debris to be removed and will strictly pay the contractor's unit cost up to the estimated amount regardless if the amount is significantly less than estimated. The estimated amount is as listed in the bid proposal.

In addition, the Contractor will have the following responsibilities:

a. Be solely responsible to handle, transport, test, permit, and dispose of debris in accordance with all applicable regulatory requirements.

b. For transportation between project site, temporary storage site at the HFC ATWP and the final FDEP approved landfill disposal site.

c. To apply for, pay fees, and obtain all required environmental or transportation permits prior to handling debris. Permitting agencies include, but are not limited to, EPA, DER, DOT, Hillsborough County, City of Tampa, and Expressway Authority.

d. To perform all necessary tests as required by permit and all applicable regulatory requirements.

e. To select an adequate disposal site based on the pertinent testing results, i.e., Toxicity Characteristics Leaching Procedure (TCLP) and acquire approval from the disposal site owner for disposal of debris. The Contractor is responsible to pay all applicable disposal fees. The City expects that all removed debris material will be approved for disposal in a Class I or II landfill. Should the field test determine the

material is hazardous the City will negotiate the disposal fee for hazardous material and will be paid for by the City using contingency funds.

f. To furnish copies of records of all disposals to the City, indicating disposal site, date, amount and a brief description of material disposed including but not limited to truck weight tickets.

* * *

CONTRACT ITEMS

CONTRACT ITEM 100 SERIES – CONTINGENCY

The contingency is to be used at the discretion of the Engineer to adjust for any quantity overruns and/or unforeseen conditions. Payment shall be made as lump sum and any payment for the contingency pay item will need prior approval by the Engineer. The Engineer may request a cost estimate for a contingency item for the Contractor prior to construction. No contingency funds shall be disbursed if there are no contingent items.

Payment for Contingency Item will be made at the appropriate Contract Lump Sum Price.

CONTRACT ITEM 0600 SERIES - CLEANING OF GRAVITY SEWER

The Contractor shall furnish all labor, materials, and equipment to provide cleaning of the existing gravity sewer removing sand, grit, gravel, grease, and other materials or obstructions from interceptor pipes and manholes to restore interceptor to a minimum of 95 percent of the original carrying capacity. Cleaning equipment shall be a combination of hydraulic high volume water and solids separation closed loop system. Bypass of sewer flow will not be allowed to be performed at any time.

The work includes furnishing all related work to provide cleaning of the existing sewer.

Measurement for payment will be the actual length of pipe cleaned.

Payment for Cleaning will be made at the appropriate Contract Item Unit Price per linear foot.

CONTRACT ITEM 0650 SERIES - DISPOSAL OF DEBRIS

The Contractor shall furnish all labor, materials, and equipment to transport the debris removed from the existing sewer line during cleaning to a temporary storage area at the Howard F. Curren AWT Plant and, after completion of all work associated with the Contract, haul the stored debris to an approved disposal site.

Measurement for payment will be the actual number of ton removed from the temporary storage area at the Howard F. Curren AWT Plant to the approved disposal site. The City does not guarantee the actual amount of debris to be removed and will strictly pay the contractor’s unit cost up to the estimated amount regardless if the amount is significantly less than estimated. The estimated amount is listed in the bid proposal.

All work shall conform to the requirements of the Workmanship and Materials section "Removal and Disposal of Debris"

Payment for Disposal of Debris will be made at the appropriate Contract Item Unit Price per ton of debris removed from the temporary storage area.

CONTRACT ITEM 9600 SERIES – SEWER LINE SONAR AND CLOSED CIRCUIT TELEVISION (CCTV) INSPECTION

The Contractor shall furnish all labor, materials and equipment to inspect the cleaned semi-surcharged sewer using combined underwater sonar with CCTV to provide a simultaneous composite image of the pipe both above and below the waterline. The inspection shall include a condition assessment of the cleaned sewer line following PACP defect coding.

Sonar inspection shall be utilized where fully surcharged pipelines or inverted siphons are present to obtain uninterrupted 360 degrees profile images of the internal surface.

All work shall conform to the requirements of the Workmanship and Materials section "Sonar/CCTV Inspection".

Payment for Sonar/CCTV Inspection will be measured along the centerline of the pipe from the centerline of the manholes at the appropriate Contract Item Unit Price per linear foot.

CONTRACT ITEM 9999 SERIES - MAINTENANCE OF TRAFFIC

The Contractor shall furnish all materials, equipment, and labor to establish and maintain all traffic maintenance devices and personnel for the lane closure as shown on the Plans, specified, and directed by the Engineer.

The work includes all striping requirements as described in Specific Provision 24, installation of all signs, barricades, lights and flagmen, additional earth excavation, selected fill, temporary wearing surface, temporary bridges, and all appurtenant work complete in place as necessary to control traffic and provide for safety to the public, all in compliance with the Manual on Uniform Traffic Control Devices, "MUTCD," with subsequent revisions and additions, and to the satisfaction of the Engineer.

Payment for Maintenance of Traffic will be made at the appropriate Contract Lump Sum Price.

* * *

2/17/04