The Enclosed Document Is Provided For Your Convenience.

Please Email ALL Questions:

MailTo:ContractAdministration@TampaGov.net

Please Let Us Know If You Plan To Bid

City of Tampa
Contract Administration Department
306 E. Jackson St. #280A4N
Tampa, FL 33602
(813)274-8456

CITY OF
TAMPA, FLORIDA

NOTICE TO BIDDERS, INSTRUCTIONS TO BIDDERS
PROPOSAL, BID BOND, FORM OF NOTICE OF AWARD,
AGREEMENT, PERFORMANCE BOND AND
SPECIFICATIONS

FOR

Contract 17-C-00008

Stormwater Construction Citywide - FY17

REBID

City of Tampa
CONTRACT ADMINISTRATION DEPARTMENT
TAMPA MUNICIPAL OFFICE BUILDING
306 E. JACKSON STREET - 4TH FLOOR NORTH
TAMPA, FLORIDA 33602

FEBRUARY 2017

Revised 2016-08-29

CITY OF TAMPA
CONTRACT ADMINISTRATION DEPARTMENT
306 E. Jackson Street 280A4N
Tampa, FL 33602

****

BID NOTICE MEMO
****

Bids will be received no later than 1:30 p.m. on the indicated Date(s) for the following Project(s):
****

CONTRACT NO.: 17-C-00008; Stormwater Construction – Citywide FY17 - Rebid
BID DATE: March 7, 2017 ESTIMATE: $3,200,000 SCOPE: The project comprises furnishing all labor, materials and equipment for construction of stormwater infrastructure in various locations within the City of Tampa Stormwater boundaries. Work includes stormwater pipe, stormwater pond construction and excavation, ditch grading, roadway-related improvements, pavement milling and resurfacing, water main and wastewater offsets and replacement, concrete and asphalt driveways, concrete sidewalks, concrete curb and gutter, landscaping, hydroseeding and sodding for seven stormwater projects with all associated work required for a complete project in accordance with the Contract Documents. PRE-BID CONFERENCE: Tuesday, February 21, 2017, 2:30p.m. Attendance is not mandatory, but recommended.
****

Bids will be opened in the 4th Floor Conference Room, Tampa Municipal Office Building, 306 E. Jackson Street, Tampa, Florida 33602. Pre-Bid Conference is held at the same location unless otherwise indicated. Plans and Specifications and Addenda for this work may be examined at, and downloaded from, www.demandstar.com. Backup files are available at http://www.tampagov.net/contract-administration/programs/construction-project-bidding. Subcontracting opportunities may exist for City certified Small Local Business Enterprises (SLBEs). A copy of the current SLBE directory may be obtained at www.Tampagov.net. Phone (813) 274-8456 for assistance. Email Technical Questions to: contractadministration@tampagov.net .

TABLE OF CONTENTS

BIDDING REQUIREMENTS

Notice to Bidders.....N-1
Instructions to Bidders .....I-1a thru I-4
Insurance Requirements .....INS-1 thru INS-2
SLBE Goal Setting List GS-1
Goal Contact List Instructions.....GCL-1
Sample Solicitation Letter.....SL-1

BID FORMS

Proposal .....P-1 thru P-7
Good Faith Efforts Compliance Plan.....GFECP
SLBE Solicited .....DMI – Solicited
SLBE Utilized .....DMI – Utilized
Bid Bond.....BB-1

CONTRACT FORMS

Agreement .....A-1 thru A-15
Public Construction Bond .....PB-1 thru PB-3

GENERAL PROVISIONS

General Provisions .....G-1 thru G-10
Specific Provisions.....SP-1- thru SP-25
Contract Items.....C-1 thru C-25
Subcontractors Payment Form.....DMI - Payments
Project Sign.....Sign-1 thru Sign-2

SPECIFICATION
WORKMANSHIP AND MATERIALS

Section 1 - Excavation - Earth and Rock.....W1-1 thru W1-5
Section 2 - Backfilling.....W2-1 thru W2-4
Section 6 - Reinforcing Steel .....W6-1 thru W6-4
Section 11 - PVC Pipe Gravity .....W11-1 thru W11-7
Section 15 - Laying and Jointing Pipe.....W15-1 thru W15-7
Section 16 - Restoration of Street Pavements.....W16-1 thru W16-9
Section 27 - Demolition.....W27-1 thru W27-2
Section 30 - Miscellaneous Pipe and Fittings .....W30-1 thru W30-2
Section 105 - Root Pruning.....W105-1
Section 108 - Dewatering .....W108-1 thru W108-4
Section 110 - Clearing and Grubbing and Well Abandonment.....W110-1 thru W110-8
Section 112 - Trees, Plants, and Groundcovers.....W112-1 thru W112-8
Section 113 - Disposal of Debris W113-1
Section 425 - Stormwater Inlets, Manholes and Junction Boxes .....W425-1 thru W425-7

Section 430 - Pipe Culverts and Strom Sewers.....W430-1 thru W430-5
Section 436 - Trench Drains.....W436-1
Section 571 - Wood Fences & Gates.....W571-1
Section 942 - Gaskets .....W942-1 thru W942-2
Section 02930 – Sodding and Hydroseeding.....02930-1 thru 02930-7

Stormwater Construction – Citywide FY17 – WATER

Workmanship and Material Specifications.....MS-1 thru MS-36
Technical Specifications .....TS-1 thru TS-26

PLANS 0 Sheets of Drawings

NOTICE TO BIDDERS
CITY OF TAMPA, FLORIDA
Contract 17-C-00008; Stormwater Construction Citywide - FY17

Sealed Proposals will be received by the City of Tampa no later than 1:30 P.M., March 7, 2017, in the 4th Floor Conference Room, Tampa Municipal Office Building, 306 E. Jackson Street, Tampa, Florida, there to be publicly opened and read aloud.

The proposed work is to include, but not be limited to, furnishing all labor, materials and equipment for construction of stormwater infrastructure in various locations within the City of Tampa Stormwater boundaries. Work includes stormwater pipe, stormwater pond construction and excavation, ditch grading, roadway-related improvements, pavement milling and resurfacing, water main and wastewater offsets and replacement, concrete and asphalt driveways, concrete sidewalks, concrete curb and gutter, landscaping, hydroseeding and sodding for seven stormwater projects with all associated work required for a complete project in accordance with the Contract Documents.

The Instructions to Bidders, Proposal, Form of Bid Bond, Agreement, Form of Public Construction Bond, Specifications, Plans and other Contract Documents are posted at DemandStar.com. Backup files may be downloaded from http://www.tampagov.net/contract-administration/programs/construction-project-bidding. One set may be available for reference at the office of the Contract Administration Department, Municipal Office Building, Fourth Floor North, City Hall Plaza, Tampa, Florida 33602.

Each Proposal must be submitted on the Proposal form included in the Specifications and must be accompanied by a certified check or cashier's check on a solvent bank or trust company in compliance with Section 255.051, Florida Statutes, made payable to the City of Tampa, in an amount of not less than five per cent of the total bid, or a Bid Bond, of like amount, on the form set forth in the Contract Documents, as a guarantee that, if the Proposal is accepted, the Bidder will execute the Proposed Contract and furnish a Public Construction Bond within twenty (20) days after receipt of Notice of Award of Contract.

To be eligible to submit a proposal, a Bidder must hold the required and/or appropriate current license, certificate, or registration (e.g. DBPR license/certificate of authorization, etc.) in good standing at the time of receipt of Bids. Per Section 489.131, Florida Statutes, Proposals submitted for the construction, improvement, remodeling, or repair of public projects must be accompanied by evidence that the Bidder holds the required and/or appropriate current certificate or registration, unless the work to be performed is exempt under Section 489.103, Florida Statutes.

The City of Tampa reserves the right to reject any or all Bids and to waive any informalities in the Bid and/or Bid Bond. Acceptance or rejection of Proposals will be made as soon as practicable after the Proposals are received, but the City reserves the right to hold Proposals for ninety (90) days from the date of Opening.

Bid Protest Procedures: Unless subsequently indicated otherwise, in a revised posting on the Department's web page for Construction Project Bidding, the City of Tampa intends to award the referenced project to the lowest bidder listed in the tabulation posted on or about the date of Bid Opening. A bidder aggrieved by this decision may file a protest not later than 4:30 P.M., five (5) business days from the first posting thereof, pursuant to City of Tampa Code Chapter 2, Article V, Division 3, Section 2-282, Procurement Protest Procedures. Protests not conforming therewith shall not be reviewed.

Any Requests For Information must be submitted by email to ContractAdministration@tampagov.net

A person or affiliate who has been placed on the convicted vendor list following a conviction for a public entity crime may not submit a bid on a contract to provide any goods or services to a public entity, may not submit a bid on a contract with a public entity for the construction or repair of a public building or public work, may not submit bids on leases of real property to a public entity, may not be awarded or perform work as a contractor, supplier, subcontractor, or consultant under a contract with any public entity, and may not transact business with any public entity in excess of the threshold amount provided in Section 287.017, for CATEGORY TWO for a period of 36 months from the date of being placed on the convicted vendor list." Refer to Section 287.133, Florida Statues.

In accordance with the City of Tampa's Equal Business Opportunity Program Ordinance, a Goal may have been established for subcontracting with Small Local Business Enterprises, SLBEs, certified by the City. Links to further information and a list of SLBEs are on the Department's Construction Project Bidding Web page. A link to the current complete directory of SLBEs is on the Minority Business Development Office Website.

Pursuant to Section 287.087, Florida Statutes, under certain circumstances preference may be given to businesses with a drug-free workplace program that meets the requirements of said Section.

INSTRUCTIONS TO BIDDERS
SECTION 1 - SPECIAL INSTRUCTIONS

I-1.01 GENERAL:

The proposed work is the Stormwater Construction Citywide - FY17 - Rebid in the City of Tampa, as required for a complete project, as shown on the plans and detailed in the specifications. The work is located on land owned or controlled by the City of Tampa.

To be eligible to submit a proposal, a Bidder must hold the required and/or appropriate current license, certificate, or registration (e.g. DBPR license/certificate of authorization, etc.) in good standing at the time of receipt of Bids. Per Section 489.131, Florida Statutes, Proposals submitted for the construction, improvement, remodeling, or repair of public projects must be accompanied by evidence that the Bidder holds the required and/or appropriate current certificate or registration, unless the work to be performed is exempt under Section 489.103, Florida Statutes.

I-1.02 FORM PREPARATION AND PRESENTATION OF PROPOSALS: Replace the second sentence with the following: Submission of the entire specification book is not required.

I-1.03 ADDENDA – Section I-2.03 is replaced with the following: No interpretation of the meaning of the Plans, Specifications, or other Contract Documents will be made to any Bidder orally.

Every request for such interpretation must be in writing, addressed to the City of Tampa, Contract Administration Department, 306 E. Jackson St., 4th Floor, Tampa, Florida 33602 and then emailed to ContractAdministration@tampagov.net. To be given consideration, such request must be received at least seven (7) days prior to the date fixed for the opening of the Proposals. Any and all such interpretations and any supplemental instructions will be in the form of written addenda which, if issued, will be posted on DemandStar.Com and on the Department's web page, with notice given to all prospective bidders at the respective fax numbers or e-mail addresses furnished, for such purposes. Failure of any Bidder to receive any such addenda shall not relieve said Bidder from any obligation under his Proposal as submitted. All addenda so issued shall become part of the Contract Documents.

I-1.04 INSTRUCTIONS TO BIDDERS

SECTION 2 – GENERAL INSTRUCTIONS. Section I-2.07 SIGNATURE AND QUALIFICATIONS OF BIDDERS is replaced with the following:

> Proposals must be signed in ink by the Bidder with signature in full. When firm is a Bidder, the Proposal shall be signed in the name of the firm by one or more partners. When a corporation is a bidder the officer signing shall set out the corporate name in full beneath which he shall sign his name and give the title of his office. The Proposal shall also bear the seal of the corporation attested by its secretary.
>
> If the bidder referred to in Section I-2.07 is a corporation, it must submit; upon request, a copy of its filed Articles of Incorporation. In addition, if the bidder was incorporated in another state, it must establish that it is authorized to do business in the State of Florida. If the bidder is using a fictitious name, it must submit upon request, proof of registration of such name with the Clerk of the Circuit Court of the County where its principal place of business is. Failure to submit what is required is grounds to reject the bid of that bidder.

SECTION 2 – GENERAL INSTRUCTIONS. Section I-2.14 NONDISCRIMINATION IN EMPLOYMENT is changed to add the following to the end of the existing text:

The following provisions are hereby incorporated into any contract executed by or on behalf of the City. Contractor shall comply with the following Statement of Assurance: During the performance of the Contract, the Contractor assures the City, that the Contractor is in compliance with Title VII of the 1964 Civil Rights Act, as amended, the Florida Civil Rights Act of 1992, and the City of Tampa Code of Ordinances, Chapter 12, in that Firm/Contractor does not on the grounds of race, color, national origin, religion, sex, sexual orientation, gender identity or expression, age, disability, familial status, or marital status, discriminate in any form or manner against said Firm's/Contractor's employees or applicants for employment. Contractor understands and agrees that the Contract is conditioned upon the veracity of this Statement of Assurance, and that violation of this condition shall be considered a material breach of the Award/Contract. Furthermore, Contractor herein assures the City that said Contractor will comply with Title VI of the Civil Rights Act of 1964 when federal grant(s) is/are

involved. This Statement of Assurance shall be interpreted to include Vietnam-Era Veterans and Disabled Veterans within its protective range of applicability. Firm/Contractor further acknowledges and agrees to provide the City with all information and documentation that may be requested by the City from time to time regarding the solicitation, selection, treatment and payment of subcontractors, suppliers and vendors in connection with this Award/Contract. Firm/Contractor further acknowledges that it must comply with City of Tampa Code of Ordinances, Chapter 26.5, as enacted by Ordinance No. 2008-89.

I-1.05 TIME FOR COMPLETION:

The work shall be arranged to be completed in accordance with a progress schedule approved by the Construction Engineer.

The time for completion of this project, referred in Article 4.01 of the Agreement, shall be 365 consecutive calendar days. The period for performance shall start from the date indicated in the Notice To Proceed.

I-1.06 LIQUIDATED DAMAGES:

The amount of liquidated damages, referred to in Article 4.06 of the Agreement, for completion of this project shall be $500.00 per calendar day.

I-1.07 BASIS OF AWARD OF CONTRACT:

The basis of award referred to in Item I-2.11 of Instructions to Bidders shall be the greatest amount of work, which can be accomplished within the funds available as budgeted. The award may be made on the basis of the total bid, base bid, alternates(s) if any, unit bids if any, or any combination thereof deemed to be in the best interest of the City.

Unless all bids are rejected, the award will be made within 90 days after opening proposals.

I-1.08 GROUND BREAKING CEREMONY:

Arrangement may be made by the City in coordination with the Contractor, for construction to commence with a Ground Breaking Ceremony. Details will be discussed at the pre-construction conference.

I-1.09 INSURANCE:

The insurance required for this project shall be as indicated on the attached and incorporated Special Instructions pages beginning with page INS-1 entitled CITY OF TAMPA INSURANCE REQUIREMENTS, which among other things requires the Contractor to provide a Certificate of Insurance to the City prior to commencing work. The City may from time to time use a third party vendor to manage its insurance certificates and related documentation which vendor may periodically initiate contact, requests for information, etc. on the City's behalf.

I-1.10 EQUAL BUSINESS OPPORTUNITY PROGRAM / SLBE / REQUIREMENTS

BIDDERS MUST SUBMIT COMPLETED FORMS MBD-10 AND MBD-20 WITH BIDS. BIDS SUBMITTED WITHOUT THE COMPLETED FORMS (INCLUDING SIGNATURES) WILL BE DEEMED NON-RESPONSIVE.

In accordance with the City of Tampa's Equal Business Opportunity Program, a Goal of 29.8% has been established for subcontracting with Small Local Business Enterprises, (SLBEs), certified by the City. The goal is based upon the availability of the firms listed on the Subcontract Goal Contract List included herein.

BIDDERS MUST SOLICIT ALL SLBES ON THAT LIST and provide documentation of emails, faxes, phone calls, letters, or other communication with the firms as a first step to demonstrate Good Faith Efforts to achieve the goal. The list is formatted to facilitate e-mail solicitations to the listed firms by copying and pasting e-mail addresses.

INSTRUCTIONS TO BIDDERS
SECTION 1 - SPECIAL INSTRUCTIONS

Bidders may explore other opportunities for subcontracting with SLBEs by consulting the current directory of all certified SLBEs posted on the Minority Business Development Office web page.

GOOD FAITH EFFORT COMPLIANCE PLAN REQUIRED - When a Goal has been established, the Bidder must submit, with its bid, completed to the fullest extent possible, a Good Faith Effort Compliance Plan using the form GFECP contained herein. Additional documentation is required whenever an SLBE subcontractor's low quote is not utilized. Supplemental information or documentation concerning the Bidder's Compliance Plan may be required prior to award as requested by the City.

DIVERSITY MANAGEMENT INITIATIVE, DMI, DATA REPORTING FORMS REQUIRED - Bidders must submit, with its bid, "DMI-Solicited" forms listing all subcontractors solicited and "DMI-Utilized" forms listing all subcontractors to be utilized. Supplemental forms, documentation, or information may be submitted at bid time or as requested by the City.

After an award, "DMI-Payments" forms are to be submitted with payment requests to report payments to subcontractors.

Bidders may visit the Minority Business Development Office's web page at TampaGov.net for other information about the SLBE program, FAQ's, and the latest SLBE directory of certified firms.

I-1.11 BID SECURITY:

Surety companies shall have a rating of not less than B+ Class VI as evaluated in the most recently circulated Best KeyRating Guide Property/Casualty.

I-1.12 PUBLIC CONSTRUCTION BOND:

The Bidder who is awarded the Contract will be required to furnish a Public Construction Bond upon the form provided herein, equal to 100 percent of the Contract price, such Bond to be issued and executed by (a) surety company(ies) acceptable to the City and licensed to underwrite contracts in the State of Florida. After execution of the Agreement and before commencing work, the Contractor must provide the City a certified copy of the officially recorded Bond.

I-1.13 AGREEMENT

SECTION 2 – POWERS OF THE CITY'S REPRESENTATIVES, new Article 2.05:
Add the following:

Article 2.05 CITY'S TERMINATION FOR CONVENIENCE:

The City may, at any time, terminate the Contract in whole or in part for the City's convenience and without cause. Termination by the City under this Article shall be by a notice of termination delivered to the Contractor, specify the extent of termination and the effective date.

Upon receipt of a notice of termination, the Contractor shall immediately, in accordance with instructions from the City, proceed with performance of the following duties regardless of delay in determining or adjusting amounts due under this Paragraph:

(a) cease operations as specified in the notice;
(b) place no further orders and enter into no further subcontracts for materials, labor, services or facilities except as necessary to complete continued portions of the Contract;
(c) terminate all subcontracts and orders to the extent they relate to the Work terminated;
(d) proceed to complete the performance of Work not terminated; and
(e) take actions that may be necessary, or that the City may direct, for the protection and preservation of the terminated Work.

The amount to be paid to the Contractor by the City because of the termination shall consist of:

(a) for costs related to work performed on the terminated portion of the Work prior to the effective date including termination costs relative to subcontracts that are properly chargeable to the terminated portion of the Work;

(b) the reasonable costs of settlement of the Work terminated, including accounting, legal, clerical and other expenses reasonable necessary for the preparation of termination settlement proposals and supporting data; additional costs of termination and settlement of subcontracts excluding amounts of such settlements; and storage, transportation, and other costs incurred which are reasonably necessary for the preservation, protection or disposition of the terminated Work; and

(c) a fair and reasonable profit on the completed Work unless the Contractor would have sustained a loss on the entire Contract had it been completed.

Allowance shall be made for payments previously made to the Contractor for the terminated portion of the Work, and claims which the City has against the Contractor under the Contract, and for the value of materials supplies, equipment or other items that are part of the costs of the Work to be disposed of by the Contractor.

SECTION 5 – SUBCONTRACTS AND ASSIGNMENTS, Article 5.01, Page A-7, last paragraph:
Change "…twenty-five (25) percent…" to "…fifty-one (51) percent…"

SECTION 8 – CONTRACTOR'S EMPLOYEES, Article 8.03, Page A-9, delete Article 8.03 in its entirety and Replace with the following new article:

ARTICLE 8.03 EMPLOYMENT OPPORTUNITIES
The Contractor shall, in the performance of the work required to be done under this Contract, employ all workers without discrimination and must not maintain, provide or permit facilities that are segregated.

SECTION 10 – PAYMENTS, Article 10.05, Page A-10, 1st Paragraph, 1st Sentence:
Change "…fair value of the work done, and may apply for…" to "…fair value of the work done, and shall apply for…"

SECTION 11 – MISCELLANEOUS PROVISIONS, Article 11.02, Page A-12, 1st Paragraph, 2nd Sentence:
Delete the 2nd Sentence in its entirety and replace it with the following new 2nd Sentence:

Without limiting application of Article 11.07, below, whenever the Contractor is required or desires to use any design, device, material, or process covered by letters of patent or copyright, the Contractor shall indemnify, defend, and hold harmless the City Indemnified Parties (as defined below) from any and all Claims (as defined below) for infringement by reason of the use of any such patented design, device, tool, material, equipment, or process, to be performed under the Contract and damages which may be incurred by reason of such infringement at any time during the prosecution or after completion of the work.

SECTION 11 – MISCELLANEOUS PROVISIONS, Article 11.03, Page A-12:
Delete Article 11.03 in its entirety and replace with the following new article:

ARTICLE 11.03 INTENTIONALLY OMITTED.

SECTION 11 – MISCELLANEOUS PROVISIONS, Article 11.07, Page A-12:
Delete Article 11.07 in its entirety and replace with the following new article:

ARTICLE 11.07 INDEMNIFICATION PROVISIONS
Whenever there appears in this Agreement, or in the other Contact Documents made a part hereof, an indemnification provision within the purview of Chapter 725.06, Laws of Florida, the monetary limitation on the extent of the indemnification under each such provision shall be One Million Dollars or a sum equal to the total Contract price, whichever shall be the greater.

Contractor releases and agrees to defend, indemnify and hold harmless the City, its officers, elected and appointed officials, employees, and/or agents (collectively, "City Indemnified Parties") from and against any and all losses, liabilities, damages, penalties, settlements, judgments, charges, or costs (including without limitation attorneys' fees, professional fees, or other expenses) of every kind and character arising out of any and all claims, liens, is entitled to indemnification hereunder. This obligation shall in no way be limited in any nature whatsoever by any limitation on the amount or type of Contractor's insurance coverage.

The parties agree that to the extent the written terms of this indemnification are deemed by a court of competent jurisdiction to be in conflict with any provisions of Florida law, in particular Sections 725.06 and 725.08, Florida Statutes, the written terms of this indemnification shall be deemed by any court of competent jurisdiction to be modified in such a manner as to be in fully and complete compliance with all such laws and to contain such limiting conditions or limitations of liability, or to not contain any unenforceable or prohibited term or terms, such that this indemnification shall be enforceable in accordance with and to the maximum extent permitted by Florida law.

The obligation of Contractor under this Article is absolute and unconditional; it is not conditioned in any way on any attempt by a City Indemnified Party to collect from an insurer any amount under a liability insurance policy, and is not subject to any set-off, defense, deduction, or counterclaim that the Contactor might have against the City Indemnified Party. The duty to defend hereunder is independent and separate from the duty to indemnify, and the duty to defend exists regardless of any ultimate liability of Contractor, the City, and any City Indemnified Party. The duty to defend arises immediately upon presentation of a Claim by any party and written notice of such Claim being provided to Contractor. Contractor's defense and indemnity obligations hereunder will survive the expiration or earlier termination of this Contract.

Contractor agrees and recognizes that the City Indemnified Parties shall not be held liable or responsible for any Claims which may result from any actions or omissions of Contractor in which the City Indemnified Parties participated either through providing data or advice and/or review or concurrence of Contractor's actions. In reviewing, approving or rejecting any submissions by Contractor or other acts of Contractor, the City in no way assumes or shares any responsibility or liability of Contractor or any tier of subcontractor/subconsultant/supplier, under this Contract.

In the event the law is construed to require a specific consideration for such indemnification, the parties agree that the sum of Ten Dollars and 00/100 ($10.00), receipt of which is hereby acknowledged, is the specific consideration for such indemnification and the providing of such indemnification is deemed to be part of the specifications with respect to the services provided by Contractor.

SECTION 11 – MISCELLANEOUS PROVISIONS, Article 11.12, Page A-13:
Change Article 11.12 to add the following new language after existing text:

The City of Tampa is a public agency subject to Chapter 119, Florida Statutes. In accordance with Florida Statutes, 119.0701, Contractor agrees to comply with Florida's Public Records Law, including the following:

1. Contractor shall keep and maintain public records required by the City to perform the services under this Agreement;

2. Upon request by the City, provide the City with copies of the requested records, having redacted records in total on in part that are exempt from disclosure by law or allow the records to be inspected or copied within a reasonable time (with provision of a copy of such records to the City) on the same terms and conditions that the City would provide the records and at a cost that does not exceed that provided in Chapter 119, Florida Statutes, or as otherwise provided by law;

3. Ensure that records, in part or in total, that are exempt or that are confidential and exempt from disclosure requirements are not disclosed except as authorized by law for the duration of the Agreement term and following completion (or earlier termination) of the Agreement if Contractor does not transfer the records to the City;

4. Upon completion (or earlier termination) of the Agreement, Contractor shall within 30 days after such event either transfer to the City, at no cost, all public records in possession of the Contractor or keep and maintain the public records in compliance with Chapter 119, Florida Statutes. If Contractor transfers all public records to the City upon completion (or earlier termination) of the Agreement, Contractor shall destroy any duplicate records that

are exempt or confidential and exempt from public records disclosure requirements. If Contractor keeps and maintains public records upon completion (or earlier termination) of the Agreement, Contractor shall meet all applicable requirements for retaining public records. All records stored electronically must be provided to the City in a format that is compatible with the information technology systems of the agency.

The failure of Contractor to comply with Chapter 119, Florida Statutes, and/or the provisions set forth in this Article shall be grounds for immediate unilateral termination of the Agreement by the City; the City shall also have the option to withhold compensation due Contractor until records are received as provided herein.

IF CONTRACTOR HAS QUESTIONS REGARDING THE APPLICATION OF CHAPTER 119, FLORIDA STATUTES, TO CONTRACTOR'S DUTY TO PROVIDE PUBLIC RECORDS RELATING TO THIS AGREEMENT, CONTACT THE CUSTODIAN OF PUBLIC RECORDS AT 813-274-8598, JIM.GREINER@TAMPAGOV.NET, AND CONTRACT ADMINISTRATION DEPARTMENT, TAMPA MUNICIPAL OFFICE BUILDING, 4TH FLOOR, 306 E. JACKSON ST. TAMPA, FLORIDA 33602.

I-1.14 Contractors must utilize the U.S. Department of Homeland Security's E-Verify Systems to verify the employment eligibility of all persons employed during the term of the Contract to perform employment duties within the State of Florida and all persons, including subcontractors, assigned by Contractor to perform work pursuant to the contract.

I-1.15 GENERAL PROVISIONS; G-2.02 Copies Furnished to Contractor: Replace the first paragraph with the following:

The Contractor shall acquire for its use copies of the plans and specifications as needed, which may be downloaded from the City's web site, at http://www.tampagov.net/dept_contract_administration/programs_and_services/construction_project_bidding/index.asp

Bidder as part of the solicitation process (and as Contractor if Bidder is successful) may hold, come into possession of, and/or generate certain building plans, blueprints, schematic drawings, including draft, preliminary, and final formats, which depict the internal layout and structural elements of a building, facility, or other structure owned or operated by the City or an agency (singularly or collectively "Exempt Plans"), which pursuant to Section 119.071(3), Florida Statutes, are exempt from Section 119.07(1), Florida Statutes and Section 24(a), Art. I of the Florida State Constitution. Contractor certifies it has read and is familiar the exemptions and obligations of Section 119.071(3), Florida Statutes; further that Contractor is and shall remain in compliance with same, including without limitation maintaining the exempt status of such Exempt Plans, for so long as any Exempt Plans are held by or otherwise in its possession.

I-1.16 PAYMENT DISPUTE RESOLUTION

Any dispute pertaining to pay requests must be presented to the City pursuant to Executive Order 2003-1.

I-1.17 SCRUTINIZED COMPANIES.

Section 287.135, Florida Statutes, prohibits agencies or local governmental entities from contracting with companies for goods or services of $1 million or more that are on either the Scrutinized Companies with Activities in Sudan List or the Scrutinized Companies with Activities in the Iran Petroleum Energy Sector List, created pursuant to Section 215.473, Florida Statues, or is on the Scrutinized Companies that Boycott Israel List, created pursuant to Section 215.4725, Florida Statues, (effective October 1, 2016), or is engaged in a boycott of Israel (effective October 1, 2016), or is engaged in business operations in Cuba or Syria. A company that is on either the Scrutinized Companies with Activities in Sudan List or the

INSTRUCTIONS TO BIDDERS
SECTION 1 - SPECIAL INSTRUCTIONS

Scrutinized Companies with Activities in the Iran Petroleum Energy Sector List, created pursuant to Section 215.473, Florida Statues, or is on the Scrutinized Companies that Boycott Israel List, created pursuant to Section 215.4725, Florida Statues, (effective October 1, 2016) or is engaged in a boycott of Israel (effective October 1, 2016) or is engaged in business operations in Cuba or Syria is ineligible to, and may not, bid on, submit a proposal for, or enter into or renew a contract with an agency or local governmental entity for goods or services of $1 million or more. Contractor certifies that it is not in violation of Section 287.135, Florida Statutes. For contracts $1,000,000 and greater, if the City determines the Contractor submitted a false certification under Section 287.135(5) of the Florida Statutes, or has been placed on the Scrutinized Companies with Activities in the Sudan List or the Scrutinized Companies with Activities in the Iran Petroleum Energy Sector List, or is on the Scrutinized Companies that Boycott Israel List, created pursuant to Section 215.4725, Florida Statues, (effective October 1, 2016), or is engaged in a boycott of Israel (effective October 1, 2016), or been engaged in business operations in Cuba or Syria, the City shall either terminate the Agreement after it has given the Contractor notice and an opportunity to demonstrate the City's determination of false certification was in error pursuant to Section 287.135(5)(a) of the Florida Statutes, or maintain the Agreement if the conditions of Section 287.135(4) of the Florida Statutes are met.

I-1.18 FLORIDA'S PUBLIC RECORDS LAW; DATA COLLECTION

Pursuant to Section 119.071(5)(a)2a, Florida Statutes, social security numbers shall only be collected from Bidders and/or Contractor by the City should such number be needed for identification, verification, and/or tax reporting purposes. To the extent Bidder and/or Contractor collects an individual's social security number in the course of acting on behalf of the City pursuant to the terms and conditions of its Proposal or, if awarded, the Agreement, Bidder and/or Contractor shall follow the requirements of Florida's Public Records Law.

[REMAINDER OF PAGE INTENTIONALLY LEFT BLANK]

SECTION 2
GENERAL INSTRUCTIONS

I-2.01 BIDDER'S RESPONSIBILITY
Before submitting Proposals, Bidders shall carefully examine the entire site of the proposed work and adjacent premises and the various means of approach and access to the site, and make all necessary investigations to inform themselves thoroughly as to the facilities necessary for delivering, placing and operating the necessary construction equipment, and for delivering and handling materials at the site, and inform themselves thoroughly as to all difficulties involved in the completion of all the work in accordance with the Contract Documents.

Bidders must examine the Plans, Specifications, and other Contract Documents and shall exercise their own judgment as to the nature and amount of the whole of the work to be done, and for the bid prices must assume all risk of variance, by whomsoever made, in any computation or statement of amounts or quantities necessary to complete the work in strict compliance with the Contract Documents.

Elevations of the ground are shown on the Plans and are believed to be reasonably correct, but are not guaranteed to be absolutely so and are presented only as an approximation. Bidders shall satisfy themselves as to the correctness of all elevations.

The City may have acquired, for its own use, certain information relating to the character of materials, earth formations, probable profiles of the ground, conditions below ground, and water surfaces to be encountered at the site of the proposed work. This information, if it exists, is on file at the offices of the Department of Public Works and Bidders will be permitted to see and examine this information for whatever value they consider it worth. However, this information is not guaranteed, and Bidders should satisfy themselves by making borings or test pits, or by such other methods as they may prefer, as to the character, location, and amounts of water, peat, clay, sand, quicksand, gravel, boulders, conglomerate, rock, gas or other material to be encountered or work to be performed.

Various underground and overhead structures and utilities are shown on the plans. The location and dimensions of such structures and utilities, where given, are believed to be reasonably correct, but do not purport to be absolutely so. These structures and utilities are plotted on the Plans for the information of the Bidders, but information so given is not to be construed as a representation or assurance that such structures will be found or encountered as plotted, or that such information is complete or accurate.

I-2.02 FORM, PREPARATION AND PRESENTATION OF PROPOSALS
Each Proposal shall be submitted upon the Proposal Form and in accordance with the instructions included herein. The Proposal Form must not be detached herefrom. All blank spaces for bid prices must be filled in, in both words and figures, with the unit or lump sum prices, or both, for which the Proposal is made. The computed total price for each unit price Contract Item shall be determined by multiplying the estimated quantity of the item, as set forth in the Proposal Form, by the corresponding unit price bid for such item. The resulting product shall be entered in the appropriate blank space under the column headed "Computed Total Price for Item". The lump sum price bid for each lump sum price Contract Item shall also be entered in the column headed "Computed Total Price for Item". If a Proposal contains any omissions, erasures, alterations, additions, or items not called for in the itemized Proposal, or contains irregularities of any kind, such may constitute sufficient cause for rejection of the Proposal. In case of any discrepancy in the unit price or amount bid for any item in the Proposal, the price as expressed in written words will govern. In no case is the Agreement Form to be filled out or signed by the Bidder.

In the case of certain jobs bid Lump Sum a "Schedule of Unit Prices" must be filled out as an attachment to the Lump Sum proposal. These prices may be used as a guide for the negotiation of change orders, at the City's option.

The proposal must be signed and certified and be presented on the prescribed form in a sealed envelope on/or before the time and at the place stated in the Notice of Bidders, endorsed with the name of the person, firm or corporation presenting it, the date of presentation, and the title of the work for which the Proposal is made.

Unless the apparent low bidder is now engaged in or has recently completed contract work for the City of Tampa, he, if requested, shall furnish to the City, after the opening of bids and prior to award, a summary statement of record of construction experience over the past three (3) years with proper supporting evidence, and, if required by the City, shall also furnish a list of equipment and other facilities pertinent to and available for the proper execution of the proposed work, and a statement of financial resources to the extent necessary to establish ability to carry on the proposed work. The City may make further investigations as considered necessary with respect to responsibility of the Bidder to whom it appears may be awarded the Contract.

If forwarded by mail, the sealed envelope containing the Proposal, endorsed as directed above, must be enclosed in another envelope addressed as specified in the Notice to Bidders and sent by registered mail.

I-2.03 ADDENDA AND INTERPRETATIONS
No interpretation of the meaning of the Plans, Specifications, or other Contract Documents will be made to any Bidder orally.

Every request for such interpretation must be in writing, addressed to the Contract Administration Department, Tampa Municipal Office Building, 4th Floor North, City Hall Plaza, Tampa, Florida 33602. To be given consideration, such request must be received at least seven (7) days prior to the date fixed for the opening of the Proposals. Any and all such interpretations and any supplemental instructions will be in the form of written addenda which, if issued, will be sent by certified mail, with return receipt requested, to all prospective bidders at the respective addresses furnished, for such purposes, not later than three (3) working days prior to the date fixed for the opening of the Proposals, and if requested, a copy will be delivered to the prospective bidder's representative. Failure of any Bidder to receive any such addenda shall not relieve said Bidder from any obligation under his Proposal as submitted. All addenda so issued shall become part of the Contract Documents.

I-2.04 BID SECURITY
Each Proposal must be accompanied by a certified or cashier's check issued by a solvent bank or trust company and payable at sight to the City of Tampa, in compliance with Section 255.051 Florida Statutes, or a Bid Bond upon the form provided herein, in an amount of not less than five percent of the sum of the computed total amount of the Bidder's Proposal as a guarantee that if the Proposal is accepted, the Bidder will execute and fill in the proposed Contract and Public Construction Bond within twenty (20) days after notice of award of the Contract. Certified checks shall have all necessary documentary revenue stamps attached if required by law. Surety on Bid Bonds shall be a duly authorized surety company authorized to do business in the State of Florida, and all such Bonds shall be issued or countersigned by a local resident producing agent, and satisfactory evidence of the authority of the person or persons executing such Bond to Execute the same shall be submitted with the Bond. Bid Bonds shall be issued by a surety company acceptable to the City.

Within ten (10) days after the opening of Proposals, the bid security of all but the three lowest Bidders will be returned. The bid security of the remaining two Bidders whose Proposals are not accepted will be

returned within ten (10) days after the execution of the Contract, or, if no such Contract has been executed, within ninety (90) days after the date of opening Proposals. The bid security of the Bidder whose Proposal is accepted will be returned only after he has duly executed the Contract and furnished the required Public Construction Bond and insurance.

Should it be necessary for the City to retain the bid security and said bid security is in the form of checks, the checks of these Bidders will be returned if replaced by Bid Bonds in an amount equal to the amount of the checks of such Bidders in such form and issued by a surety company acceptable to the City.

A Bidder may withdraw his Proposal before the time fixed for the opening of Proposals, without prejudice to himself, by communicating his purpose, in writing, to the Mayor and City Council, and when his communication is received, the Proposal will be handed to him or his authorized agent unopened. No Bidder may withdraw his Proposal within ninety (90) days after the day of opening Proposals.

The Bidder whose Proposal is accepted shall enter into a written contract, upon the Agreement form included herein, for the performance of the work and furnish the required Public Construction Bond within twenty (20) days after written notice by the City of Award of Contract has been served on such Bidder personally or after receipt of the written notice by registered mail to such Bidder at the address given in his Proposal.

If the Bidder to whom a Contract is awarded refuses or neglects to execute it or fails to furnish the required Public Construction Bond within twenty (20) days after receipt by him of the Notice of Award of Contract, the amount of his bid security shall be forfeited and shall be retained by the City as liquidated damages, and not as a penalty, it being now agreed that said sum is a fair estimate of the amount of damages that the City will sustain in case said Bidder fails to enter into a Contract and furnish the required Public Construction Bond. If a Bid Bond was furnished, the full amount of the Bond shall become due and payable as liquidated damages caused by such failure. The full amount of the bid security shall be forfeited as liquidated damages without consideration of the fact that an award may be less than the full amount of the Bidder's Proposal, excepting that the award shall be within the conditions of said Proposal relating to the basis of consideration for an award. No plea of mistake in the bid or misunderstanding of the conditions of forfeiture shall be available to the Bidder for the recovery of his deposit or as a defense to any action based upon the neglect or refusal to execute a contract.

I-2.05 LAWS AND REGULATIONS
The Bidder who is awarded the Contract must comply with all laws of the State of Florida, and all applicable Ordinances of the City of Tampa respecting labor and compensation and with all other statutes, ordinances, rules and regulations applicable and having the force of law.

I-2.06 PUBLIC CONSTRUCTION BOND
The Bidder who is awarded the Contract will be required to furnish a Public Construction Bond upon the form provided herein, equal to 100 percent of the Contract price, such Bond to be executed by a surety company acceptable to the City of Tampa and licensed to underwrite contracts in the State of Florida. Surety companies shall have a rating of not less than: B+ Class VI as evaluated in the most recently circulated BEST'S KEY RATING GUIDE PROPERTY-LIABILITY.

I-2.07 SIGNATURE AND QUALIFICATIONS OF BIDDERS
Proposals must be signed in ink by the Bidder with signature in full. When a firm is a Bidder, the Proposal shall be signed in the name of the firm by one or more of the partners. When a corporation is a Bidder the officer signing shall set out the corporate name in full beneath which he shall sign his name and give the title of his office. The Proposal shall also bear the seal of the corporation attested by its secretary. Anyone signing the Proposal as agent must file with it legal evidence of his authority to do so.

Bidders who are nonresident corporations shall furnish to the City a duly certified copy of their permit to transact business in the State of Florida, signed by the Secretary of State, within ten days of the notice to do so. Such notice will be given to Bidders who are nonresident corporations, to whom it appears an award will be made, and the copy of the permit must be filed with the City before the award will be made. Failure to promptly submit this evidence of qualification to do business in the State of Florida may be basis for rejection of the Proposal.

I-2.08 REJECTION OF PROPOSALS
The City reserves the right to reject any Proposal if investigation of the Bidder fails to satisfy the City that such Bidder is properly qualified to carry out the obligations and to complete the work contemplated therein. Any or all Proposals will be rejected if there is reason to believe that collusion exists among Bidders. Proposals will be considered irregular and may be rejected if they show serious omissions, alterations in form, additions not called for, conditions or unauthorized alternates, or irregularities of any kind. The City reserves the right to reject any or all Proposals and to waive such technical errors as may be deemed best for the interests of the City.

I-2.09 QUANTITIES ESTIMATED ONLY
The estimate of quantities of the various items of work and materials, if set forth in the Proposal Form, is approximate only and is given solely to be used as a uniform basis for the comparison of Proposals. The quantities actually required to complete the Contract work may be less or more than so estimated, and if awarded a Contract for the work specified, the Contractor agrees that he will not make any claim for damages or for loss of profits because of a difference between the quantities of the various classes of work assumed for comparison of Proposals and quantities of work actually performed. The City further reserves the right to vary the quantities in any amount.

I-2.10 COMPARISON OF PROPOSALS
Except jobs bid on a "One Lump Sum" basis, proposals will be compared on the basis of a total computed price arrived at by taking the sum of the estimated quantity of each time and the corresponding unit price of each item, and including any lump sum prices on individual items.

The computed total prices for individual Contract Items and the total computed price for the entire Contract, as entered by the Bidder in the Proposal Form, are for convenience only and are subject to correction in the tabulation and computation of the Proposals.

I-2.11 BASIS OF AWARD
The Contract will be awarded, if at all, to the lowest responsible Bidder or Bidders, as determined by the City and by the terms and conditions of the Contract Documents. Unless all bids are rejected, the award will be made within ninety (90) days after the opening of Proposals. The successful Bidder will be required to possess, or obtain, a valid City Occupational License.

I-2.12 INSURANCE REQUIRED
The successful Bidder and his subcontractors will be required to procure and pay for insurance covering the work in accordance with the provisions of Article 6.02 of the Agreement as indicated on special instructions pages beginning with INS-1.

I-2.13 NO ASSIGNMENT OF BID
No Bidder shall assign his bid or any rights thereunder.

I-2.14 NONDISCRIMINATION IN EMPLOYMENT
Contracts for work under this Proposal will obligate the contractors and subcontractors not to discriminate in employment practices.

Bidders must, if requested, submit with their initial bid a signed statement as to whether they have previously performed work subject to the President's Executive Order Nos. 11246 and 11375.
Bidders must, if requested, submit a compliance report concerning their employment practices and policies in order to maintain their eligibility to receive the award of the Contract.

Successful Bidders must, if requested, submit a list of all subcontractors who will perform work on the project and written,

signed statement from authorized agents of the labor pools with which they will or may deal for employees on the work together with supporting information to the effect that said labor pools practices and policies are in conformity with Executive Order No. 11246 and that said labor pools will affirmatively cooperate in or offer no hindrance to the recruitment, employment and equal treatment of employees seeking employment and performing work under the Contract, or a certification as to what efforts have been made to secure such statements when such agents or labor pools have failed or refused to furnish them prior to the award of the Contract.

I-2.15 LABOR STANDARDS
The Bidder's attention is directed to the Contract Provisions of the Labor Standards for federally assisted projects which may be attached to and made a part of the Agreement.

I-2.16 NOTICE TO LABOR UNIONS
If applicable, the successful Bidder will be required to provide Labor Unions and other organizations of workers a completed copy of the form entitled "Notice to Labor Unions or Other Organizations of Workers", and such form may be made a part of the Agreement.

I-2.17 NOTICE TO PROSPECTIVE FEDERALLY-ASSISTED CONSTRUCTION CONTRACTORS
A Certification of Nonsegregated Facilities, as required by the May 9, 1967, Order (32 F.R. 7439, May 19, 1967) on Elimination of Segregated Facilities, by the Secretary of Labor, must be submitted to said Secretary prior to the award of a federally-assisted construction and Contract exceeding $10,000 which is not exempt from the provisions of the Equal Opportunity Clause. The form of certification may be bound herein following the form of Bid Bond.

Contractors receiving federally-assisted construction Contract awards exceeding $10,000 which are not exempt from the provisions of the Equal Opportunity Clause will be required to provide for the forwarding of the following notice to prospective subcontractor for supplies and construction contracts where the subcontracts exceed $10,000 and are not exempt from the provisions of the Equal Opportunity Clause:

NOTICE TO PROSPECTIVE SUBCONTRACTORS OF REQUIREMENT
FOR CERTIFICATIONS OF NONSEGREGATED FACILITIES

"A Certification of Nonsegregated Facilities, as required by the May 9, 1967, Order (32 F.R. 7439, May 19, 1967) on Elimination of Segregated Facilities, by the Secretary of Labor, must be submitted prior to the award of a subcontract exceeding $10,000 which is not exempt from the provisions of the Equal Opportunity Clause."

"Contractors receiving subcontract awards exceeding $10,000 which are not exempt from the provisions of the Equal Opportunity Clause will be required to provide from the forwarding of this notice to prospective subcontractors for supplies and construction contracts where the subcontracts exceed $10,000 and are not exempt from the provisions of the Equal Opportunity Clause."

The United States requires a pre-award conference if a proposed construction contract exceeds one million dollars to determine if the the prospective contractor is in compliance with the Equal Employment Opportunity requirements of Executive Order 11246 of September 24, 1965. In such instances, a meeting may be scheduled at which the prospective contractor must specify what affirmative action he has taken or proposed to take to assure equal employment opportunity which must be approved by the United States before award of the contract will be authorized.

Bidders must be prepared to submit an Equal Employment Opportunity (EEO) plan at a pre-award conference. The plan must include bidding opportunities offered by the Bidder to minority subcontractors.

On October 13, 1971, President Nixon issued Executive Order 11246 emphasizing the government's commitment to the promotion of minority business enterprise. Accordingly, the United States is firmly committed to the utilization of available resources to support this important program. U.S. agencies are most interested in realizing minority participation on the subject. Achieving equal employment opportunity compliance is required through Executive Order 11246. WE cannot emphasize too strongly that minority subcontractors be extended subcontractors bidding opportunities as but one step in your affirmative action policy.

Due to the importance of this contract, U.S. Agencies may conduct an EEO Conference prior to the award of the Contract. It is suggested that the responsive Bidder confirm the minority subcontractors he contacted for bids or quotations in his EEO plan submitted at the conference.

I-2.18 EEO AFFIRMATIVE ACTION REQUIREMENTS
By the submission of a Proposal, each Bidder acknowledges that he understands and will agree to be bound by the equal opportunity requirements of Federal regulations which shall be applicable throughout the performance of work under any contract awarded pursuant to solicitation. Each Bidder agrees that if awarded a contract, he will similarly bind contractually each subcontractor. In policies, each Bidder further understands and agrees that if awarded a contract, he must engage in Affirmative Action directed to promoting and ensuring equal employment opportunity in the work force used under the contract (and he must require contractually the same effort of all subcontractors whose subcontracts exceed $100,000). The Bidder understands and agrees that "Affirmative Action" as used herein shall constitute a good faith effort to achieve and maintain minority employment in each trade in the on-site work force used on the project. * * * * * * * END of SECTION * * * * * * *

CITY OF TAMPA INSURANCE REQUIREMENTS

Prior to commencing any work or services or taking occupancy under that certain written agreement or award (for purposes of this document, Agreement) between the City of Tampa, Florida (City) and Firm/Awardee/Contractor/Consultant/Lessee/non-City party, etc. (for purposes of this document, Firm) to which this document is attached and incorporated as an Exhibit or otherwise, and continuing during the term of said Agreement (or longer if the Agreement and/or this document so requires), Firm shall provide, pay for, and maintain insurance against claims for injuries to persons (including death) or damages to property which may arise from or in connection with the performance of the Agreement (including without limitation occupancy and/or use of certain property/premises) by Firm, its agents, representatives, employees, suppliers, subtenants, or subcontractors (which term includes sub-consultants, as applicable) of any tier subject to the terms and conditions of this document. Firm's maintenance of insurance coverage as required herein is a material element of the Agreement and the failure to maintain or renew coverage or provide evidence of same (defined to include without limitation Firm's affirmative duty to provide from time to time upon City's request certificates of insurance, complete and certified copies of Firm's insurance policies, forms, and endorsements, information on the amount of claims payments or reserves chargeable to the aggregate amount of coverage(s) whether during the term of the Agreement or after as may be requested by the City in response to an issue or potential claim arising out of or related to the Agreement to which Firm's insurance obligations hereunder may apply or possibly help mitigate) may be treated as a material breach of the Agreement. Should at any time Firm not maintain the insurance coverages required, City at its sole option (but without any obligation or waiver of its rights) may (i) terminate the Agreement or (ii) purchase such coverages as City deems necessary to protect the itself (charging Firm for same) and at City's option suspending Firm's performance until such coverage is in place. If Firm does not reimburse City for such costs within 10 days after demand, in addition to any other rights, City shall also have the right to offset such costs from amounts due Firm under any agreement with the City. All provisions intended to survive or to be performed subsequent to the expiration or termination of the Agreement shall survive, including without limitation Firm's obligation to maintain or renew coverage, provide evidence of coverage and certified copies of policies, etc. upon City's request and/or in response to a potential claim, litigation, etc.

The City reserves the right from time to time to modify or waive any or all of these insurance requirements (or to reject policies) based on the specific nature of goods/services to be provided, nature of the risk, prior experience, insurer, coverage, financial condition, failure to operate legally, or other special circumstances. If Firm maintains broader coverage and/or higher limits than the minimums shown herein, the City requires and shall be entitled to such broader coverage and/or higher limits maintained by Firm. Any available insurance proceeds in excess of the specified minimum limits of insurance and coverage shall be available to the City. No representation is made that the minimum insurance requirements are sufficient to cover Firm's interests, liabilities, or obligations. Required insurance shall not limit Firm's liability.

Firm acknowledges and agrees Firm and not the City is the party in the best position to determine applicability (e.g. "IF APPLICABLE"), confirm, and/or verify its insurance coverage. Acceptance by the City, or by any of its employees, representatives, agents, etc. of certificates or other documentation of insurance or policies pursuant to the terms of this document and the Agreement evidencing insurance coverages and limits does not constitute approval or agreement that the insurance requirements have been met or that coverages or policies are in compliance. Furthermore, receipt, acceptance, and/or approval of certificates or other documentation of insurance or policies or copies of policies by the City, or by any of its employees, representatives, agents, etc., which indicate less coverage than required does not constitute a waiver of Firm's obligation to fulfill these insurance requirements.

MINIMUM SCOPE AND LIMIT OF INSURANCE [1]

A. Commercial General Liability (CGL) Insurance on the most current Insurance Services Office (ISO) Form CG 00 01 or its equivalent on an "occurrence" basis (Modified Occurrence or Claims Made forms are not acceptable without prior written consent of the City). Coverage must be provided to cover liability contemplated by the Agreement including without limitation premises and operations, independent contractors, contractual liability, products and completed operations, property damage, bodily, personal and advertising injury, contractual liability, explosion, collapse, underground coverages, personal injury liability, death, employees-as-insureds. Products and completed operations liability coverage maintained for at least 3 years after completion of work. Limits shall not be less than $1M per occurrence and $2M general aggregate for Agreements valued at $2M or less; if valued over $2M, a general aggregate limit that equals or exceeds the Agreement's value. If a general aggregate limit applies, it shall apply separately to the project/location (ISO CG 25 03 or 25 04 or equivalent). **(ALWAYS APPLICABLE)**

B. Automobile Liability (AL) Insurance in accordance with Florida law, as to the ownership, maintenance, and use of all owned, non-owned, leased, or hired vehicles. AL insurance shall not be less than: (a) $500,000 combined single limit each occurrence bodily injury and property damage for Agreements valued at $100,000 or less or (b) $1M combined single limit each occurrence bodily injury and property damage for Agreements valued over $100,000. If transportation of hazardous material involved, the MCS-90 endorsement (or equivalent). **(ALWAYS APPLICABLE)**

C. Worker's Compensation (WC) & Employer's Liability Insurance for all employees engaged under the Agreement, Worker's Compensation as required by Florida law. Employer's Liability with minimum limits of (a) $500,000 bodily injury by accident and each accident, bodily injury by disease policy limit, and bodily injury by disease each employee for Agreements valued at $100,000 and under or (b) $1M bodily injury by accident and each accident, bodily injury by disease policy limit, and bodily injury by disease each for all other Agreements. **(ALWAYS APPLICABLE)**

D. Excess (Umbrella) Liability Insurance for Agreements valued at $2M or more, at least $4M per occurrence in excess of underlying limits and no more restrictive than underlying coverage for all work performed by Firm. May also compensate for a deficiency in CGL, AL, or WC. **(ALWAYS APPLICABLE)**

E. Builder's Risk Insurance for property loss exposure associated with construction/renovation/additions to buildings or structures, including materials or fixtures to be incorporated. Must be "All Risk" form with limits of no less than the project's completed value, have no coinsurance penalties, eliminate the "occupancy clause", cover Firm (together with its contractors, subcontractors of every tier, and suppliers), and name City as a Loss Payee. **(IF APPLICABLE)**

F. Installation Floater coverage for property (usually highly valued equipment or materials such as compressors, generators, etc.) during its installation. Coverage must be "All Risk" including installation and transit for no less than 100% of the installed replacement cost value. **(IF APPLICABLE)**

G. Architects & Engineers Liability/ Professional Liability (E&O)/ Contractors Professional Liability (CPrL)/ Medical Malpractice Insurance where Agreement involves Florida-regulated professional services (e.g. architect, engineer, design-builder, CM, accountant, appraiser, investment banker medical professional) at any tier, whether employed or independent, vicarious design liability exposure (e.g. construction means & methods, design supervision), value engineering, constructability assessments/reviews, BIM process, and/or performance specifications. Limits of at least $1M per occurrence and $2M aggregate; deletion of design/ build liability exclusions, as applicable, and maintained for at least 3 years after completion of work/services and City's acceptance of same. **(IF APPLICABLE)**

H. Railroad Protective Liability (RPL) Insurance for construction within 50ft of operated railroad track(s) or where affects any railroad bridge, trestle, tunnel, track(s) roadbed, or over/under pass. Subject to involved rail road's approval prior to commencement of work. **(IF APPLICABLE).**

I. Pollution and/or Asbestos Legal Liability Insurance where Agreement involves asbestos and/or environmental hazards/contamination risks (defined broadly, e.g. lead, mold, bacteria, fuel storage, underground work, cleanup (owned or non-owned sites),pollutant generation/transportation, marine/natural resource damage, contamination claim, restitution, business interruption, mold, fungus, lead-based paint, 3rd party claims/removal, etc.), with limits of at least $1M per occurrence and $2M aggregate, maintained for at least 3 years after Agreement completion. **(IF APPLICABLE)**

J. Cyber Liability Insurance where Agreement involves portals allowing access to obtain, use, or store data; managed dedicated servers; cloud hosting services; software/hardware; programming; and/or other IT services

[1] "M" indicates million(s), for example $1M is $1,000,000

Document updated and approved by Legal and Risk Management as of 08/16/2016

and products are involved. Limits of not less than $2M per occurrence and $2M aggregate. Coverage sufficiently broad to respond to duties and obligations undertaken by Firm, and shall include, but not be limited to, claims involving infringement of intellectual property/copyright, trademark, trade dress, invasion of privacy violations, damage to or destruction of electronic information, information theft, release of confidential and/or private information, alteration of electronic information, extortion, virus transmission, and network security. Coverage, as applicable and with sufficient limits to respond, for breach response costs, regulatory fines and penalties, credit monitoring expenses. **(IF APPLICABLE)**

K. Drone/UAV Liability Insurance where Agreements involves unmanned aerial vehicles/drones. Coverage to include products and completed operations, property damage, bodily injury with limits no less than $1M per occurrence, and $2M aggregate; may be provided by CGL endorsement subject to City's prior written approval. **(IF APPLICABLE)**

L. Longshore & Harbor Workers' Compensation Act/Jones Act for work being conducted near, above, or on "navigable waters" for not less than the above Employer's Liability Insurance limit. **(IF APPLICABLE)**

M. Garagekeeper/Hangerkeeper/Marina Operator Legal Liability Insurance and/or Hull/P&I Insurance where parking lot, valet, dealership, garage services, towing, etc. and/or operation of a hangar, marina, or air plane/ship repairer, providing safe berth, air/watercraft storage/docking (on land/ in water), fueling, tours, charters, ferries, dredges, tugs, mooring, towing, boat/aircraft equipment/repair/alteration/maintenance, etc.; coverage against liability for damage to vehicles air/watercraft, their machinery in Firm's care, custody, or control both private & commercial. Limits at least equal to greater of $1M, value of max number of vehicles that may be in Firm's custody, or of most costly object in Firm's custody. **(IF APPLICABLE)**

N. Property Insurance and Interruption of Business (IOB) Insurance where premises, building, structure, or improved real property is leased, licensed, or otherwise occupied by Firm. Property Insurance against all risks of loss to any occupant/tenant improvements at full replacement cost with no coinsurance penalty, including fire, water, leak damage, and flood, as applicable, vandalism and malicious mischief endorsements. IOB by which minimum monthly rent will be paid to City for up to 1 year if premises are destroyed, rendered inaccessible or untenantable, including disruption of utilities, water, or telecommunications. **(IF APPLICABLE)**

O. Liquor Liability/Host Liquor Liability where Firm directly or indirectly provides alcoholic beverages, limits of at least $1M per occurrence and $1M aggregate. **(IF APPLICABLE)**

P. Educators Legal Liability Insurance where day care, after school program, recreational activities, etc. limits per G above. **(IF APPLICABLE)**

ADDITIONAL REQUIREMENTS

ACCEPTABILITY OF INSURERS - Insurance is to be placed with insurers admitted in the State of Florida and who have a current A.M. Best rating of no less than **A-:VII** or, if not rated by A.M. Best, as otherwise approved by the City in advance and in writing.

ADDITIONAL INSURED - **City, its elected officials, departments, officers, officials, employees, and volunteers together with, as applicable, any associated lender of the City shall be covered as additional insureds on all liability coverage** (e.g. CGL, AL, and Excess (Umbrella) Liability) as to liability arising out of work or operations performed by or on behalf of Firm including materials, parts, or equipment furnished in connection with such work or operations and automobiles owned, leased, hired, or borrowed by or on behalf of Firm. Coverage can be provided in the form of an endorsement to Firm's insurance (at least as broad as ISO Form CG 20 10 11 85 or **both** CG 10 20, CG 20 26, CG 20 33, or CG 20 38 **and** CG 20 37 if later revisions used).

CANCELLATION/NON-RENEWAL – Each insurance policy shall provide that at least 30 days written notice must be given to City of any cancellation, intent to non-renew, or material reduction in coverage (except aggregate liability limits) and at least 10 days' notice for non-payment of premium. Firm shall also have an independent duty to notify City in like manner, within 5 business days of Firm's receipt from its insurer of any notices of same. If any policy's aggregate limit is reduced, Firm shall directly take steps to have it reinstated. Notice and proof of renewal/continued coverage/certifications, etc. shall be sent to the City's notice (or Award contact) address as stated in the Agreement with a copy to the following:

☒ Contract Administration Department, 306 E Jackson St, Tampa, FL 33602 ☐ Purchasing Department, 306 E Jackson Street, Tampa, FL 33602

☐ Other: _____

CERTIFICATE OF INSURANCE (COI) – to be provided to City by insurance carrier prior to Firm beginning any work/services or taking occupancy and, if the insurance expires prior to completion of the work or services or Agreement term (as may be extended), a renewal COI at least 30 days before expiration to the above address(es). COIs shall specifically identify the Agreement and its subject (project, lease, etc.), shall be sufficiently comprehensive to insure City (named as additional insured) and Firm and to certify that coverage extends to subcontractors' acts or omissions, and as to permit the City to determine the required coverages are in place without the responsibility of examining individual policies. **Certificate Holder must be The City of Tampa, Florida.**

CLAIMS MADE – If any liability insurance is issued on a claims made form, Firm agrees to maintain such coverage uninterrupted for at least 3 years following completion and acceptance of the work either through purchase of an extended reporting provision or purchase of successive renewals. The Retroactive Date must be shown and be a date not later than the earlier of the Agreement date or the date performance/occupancy began thereunder.

DEDUCTIBLES/ SELF-INSURED RETENTIONS (SIR) – must be disclosed to City and, if over $500,000, approved by the City in advance and in writing, including at City's option being guaranteed, reduced, or eliminated (additionally if a SIR provides a financial guarantee guaranteeing payment of losses and related investigations, claim administration, and defense expenses). Firm shall be fully responsible for any deductible or SIR (without limiting the foregoing a policy with a SIR shall provide or be endorsed to provide that the SIR may be satisfied by either the City or named insured). In the event of loss which would have been covered but for a deductible or SIR, City may withhold from any payment due Firm, under any agreement with the City, an amount equal to same to cover such loss should full recovery not be obtained under the policy.

PERFORMANCE – All insurance policies shall be fully performable in Hillsborough County, Florida (the County), and construed in accordance with Florida law. Further, all insurance policies must expressly state that the insurance company will accept service of process in the County and that the exclusive venue for any action concerning any matter under those policies shall be in the appropriate state court of the County.

PRIMARY POLICIES - Firm's insurance coverage shall be primary insurance coverage at least as broad as ISO CG 20 01 04 13 as to the City, its elected officials, departments, officers, employees, and volunteers. Any insurance or self-insurance maintained by the City, its elected officials, departments, officers, employees, and volunteers shall be excess of the Firm's insurance and shall not contribute with it.

SUBCONTRACTORS/INDEPENDENT ASSOCIATES/CONSULTANTS/SUBTENANTS/SUBLICENSEE – **Firm shall require and verify that all such entities maintain insurance meeting all requirements stated herein with the City as an additional insured** by endorsement (ISO FORM CG 20 38, or broader) or otherwise include such entities within Firm's insurance policies. Upon City's request, Firm shall furnish complete and certified copies of copies of such entities' insurance policies, forms, and endorsements.

SUBCONTRACTOR DEFAULT INSURANCE, CONTROLLED INSURANCE PROGRAM, WRAP-UP. Use requires express prior written consent of City Risk Manager.

UNAVAILABILITY – To the fullest extent permitted by law, if Firm is out of business or otherwise unavailable at the time a claim is presented to City, Firm hereby assigns to the City all of its right, title and interest (but not any liabilities or obligations) under any applicable policies of insurance.

WAIVER OF SUBROGATION – With regard to any policy of insurance that would pay third party losses, Firm hereby grants City a waiver of any right to subrogation which any insurer of Firm may acquire against the City by virtue of the payment of any loss under such insurance. Firm agrees to obtain any endorsement that may be necessary to affect such waiver, but this provision shall apply to such policies regardless.

WAIVER/RELEASE AGREEMENT – Where Firm has a defined group of persons who might be exposed to harm (e.g. participants in an athletic event/program, volunteers) any waiver or release agreement used by Firm whereby such persons (and their parent/guardian as applicable) discharge Firm from claims and liabilities, shall include the City, its elected officials, departments, officers, officials, employees, and volunteers to the same extent as Firm.

Document updated and approved by Legal and Risk Management as of 08/16/2016

Subcontract Goal Contact List: SLBEs and Underutilized WMBEs
(**The Underutilized WMBE Industry Category for Subcontracts is Construction - BBE Certified)

Project 17-C-00008 (Stormwater Construction - Citywide FY 2017)

#'s	Business Name	Phone	Fax	Email	Address 1	City	State	Zip	Business Description	FEIN	Certification Type	Expiration Date
1	BUN Construction Co., Inc.	813-931-8270	813-931-9185	bunconstruction@tampabay.rr.com	4135 E. Hillsborough Avenue	Tampa	FL	33610	General Contractor, Construction and Inspection; Site Work/Land Clearing; Asphalt Paving Services - (paving, texturing, sealing, repairs, striping, etc.)	593362663	**SLBE/BBE**	3/14/2018
2	City Wide Paving, LLC	813-325-4250	813-849-1723	citywidepavingcwp@yahoo.com	2508 N. 32nd St.	Tampa	FL	33605	ASPHALT PAVING SERVICES (Non-structural Subcontractor Only)	270559624	**SLBE/BBE**	4/29/2018
1	2 Meyer Corp.	813-645-3150	813-645-5634	Renatonjr@aol.com	6308 Lake Sunrise Dr.	Apollo Beach	FL	33572	General Contractor; demolition, grading, base construction, drainage and pipe installation; irrigation; general construction	562384669	**SLBE**	12/18/2017
2	Burgess Civil, LLC	813-906-1350	813-906-1352	bburgess@burgesscivil.com	6913 Harney Rd	Tampa	FL	33617	Engineering, GC, Excavation, Underground Utility	452997668	**SLBE**	3/28/2018

African American/Black Business Enterprises (BBE) may count toward the subcontract goal. Refer to MBD Form 70-Procurement Guidelines

Report Date: December 8, 2016

Subcontract Goal Contact List: SLBEs and Underutilized WMBEs
(**The Underutilized WMBE Industry Category for Subcontracts is Construction - BBE Certified)

Project 17-C-00008 (Stormwater Construction - Citywide FY 2017)

#'s	Business Name	Phone	Fax	Email	Address 1	City	State	Zip	Business Description	FEIN	Certification Type	Expiration Date
3	MBattle Construction llc	727-214-4301	727-517-3774	moebattle@hotmail.com	470 maple way	Safety Harbor	FL	34695	GC-Underground Excavation	760840117	**SLBE/BBE**	7/3/2018
4	CMS Crawford Maintenance Services LLC.	727-216-6469	727-216-6524	marina@crawfordmain.com	14028 Palm Way	Largo	FL	33771	Excavation Services	262249991	**SLBE**	6/2/2018
1	Best Made Enterprises, Inc.	813-248-5266	813-248-1299	BestMadeEntInc@gmail.com	4133 Causeway Blvd.	Tampa	FL	33619	Fencing Contractor	593498525	**SLBE**	2/5/2018
2	Denson Construction	863-709-1001	863-709-1071	pete@denson-construction.com	P. O. Box 3081	Plant City	FL	33564	Install Structural/Reinforcing Steel/Concrete Construction; Fencing	593571944	**BBE**	1/5/2017
3	Ortzak Construction Group, LLC	813-961-6023	813-961-6023	dcastro@ortzak.com	13014 N. Dale Mabry Hwy, Suite 623	Tampa	FL	33618	Landscaping and Fencing Services	454837502	**SLBE**	7/9/2017
4	Communication Support Network, Inc.	727-433-2200	727-683-9220	csn2@tampabay.rr.com	Post Office Box 56394	St. Pete	FL	33732	Construction; Fencing	30379746	**SLBE**	8/16/2017
5	JEB Management, Inc. DBA Good Neighbor Fence Company	813-968-1921	813-241-6070	info@fence4u.biz	5011 20th Avenue South	Tampa	FL	33619	Construction; Fencing	30416868	**SLBE**	4/29/2017

African American/Black Business Enterprises (BBE) may count toward the subcontract goal. Refer to MBD Form 70-Procurement Guidelines

Report Date: December 8, 2016

Subcontract Goal Contact List: SLBEs and Underutilized WMBEs
(**The Underutilized WMBE Industry Category for Subcontracts is Construction - BBE Certified)

Project 17-C-00008 (Stormwater Construction - Citywide FY 2017)

#'s	Business Name	Phone	Fax	Email	Address 1	City	State	Zip	Business Description	FEIN	Certification Type	Expiration Date
6	Fresh Start Development, Inc.	813-758-5345	**813-333-5949**	freshstartdevelop@yahoo.com	601 S Falkenburg Rd, Suite 14-2	Tampa	FL	33619	General Construction; Seed Sod, Soil, & Inoculants; Fencing	203857845	**SLBE/BBE**	3/4/2017
1	Cardinal Landscaping Services of Tampa, Inc., DBA na	813-915-9696	813-915-9695	Mark@cardinallandscape.com	**817 E. Okaloosa Ave**	Tampa	FL	33604	Landscaping and Seed, Sod, Soil, & Inoculants	593394554	**SLBE**	6/4/2017
2	D & J LAWN SERVICES OF LAKELAND LLC	863-859-3525	863-853-1044	DANDJLAWNSERVICES@HOTMAIL.COM	575 OLD POLK CITY ROAD	LAKELAND	FL	33809	Lawn Maintenance, Sod Installation	273279070	**SLBE**	1/13/2018
3	Fresh Start Development, Inc.	813-758-5345	**813-333-5949**	freshstartdevelop@yahoo.com	601 S Falkenburg Rd, Suite 14-2	Tampa	FL	33619	General Construction; Seed Sod, Soil, & Inoculants; Fencing	203857845	**SLBE/BBE**	3/4/2017
4	Morelli Landscaping, Inc	727-535-6263	727-536-6855	vjmorelli@tampabay.rr.com	4855 162nd Avenue North	Clearwater	FL	33762	Landscaping Services; Seed, Sod, Soil, & Inoculants	591877993	**SLBE**	2/16/2018
1	BAY LIGHT, LLC	813-972-4057	813-971-0882	paulrobinson22@msn.com	10105 N. 11TH ST.	Tampa	FL	33612	Landscaping, Lawn Maintenance, Tree Trimming Services	455079825	**SLBE/BBE**	10/5/2018
2	Cutups Lawn Service	813-361-8871	813-238-2397	cutupslawnservice@yahoo.com	3217 East Powhatan Ave.	Tampa	FL	33610	Landscaping and Ground Maintenance, Mowing, Hauling, Tree Trimming	611241291	**SLBE/BBE**	1/4/2018

African American/Black Business Enterprises (BBE) may count toward the subcontract goal. Refer to MBD Form 70-Procurement Guidelines

Report Date: December 8, 2016

Subcontract Goal Contact List: SLBEs and Underutilized WMBEs
(**The Underutilized WMBE Industry Category for Subcontracts is Construction - BBE Certified)

Project 17-C-00008 (Stormwater Construction - Citywide FY 2017)

#'s	Business Name	Phone	Fax	Email	Address 1	City	State	Zip	Business Description	FEIN	Certification Type	Expiration Date
3	GERARDO RAMIREZ TREE SERVICE LLC	813-650-1093	813-513-5713	RAMIREZTREEREMOVAL@GMAIL.COM	8527 FRANKLIN RD	PLANT CITY	FL	33565	Residential and Commercial Tree Service	331188019	**SLBE**	5/20/2017
4	Paynes Environmental Services, LLC	813-677-6822	866-467-9029	paynestrees@cs.com	5617 Causeway Blvd	Tampa	FL	33619	Land Clearing, Tree Trimming, Subcontractor (Non-professional)	271037046	**SLBE**	9/30/2018
5	SENLEX ENVIRONMENTAL LLC	305-256-2636	305-255-0709	JDOTSON@SENLEXENVIRONMENTAL.COM	9100 SOUTH DADELAND BOULEVARD, SUITE 1500	MIAMI	FL	33156	JANITORIAL SERVICES AND WASTE COLLECTION, TREE TRIMMING, MOWING	421743332	**BBE**	3/2/2017
6	T.C.C Enterprise Inc	813-545-5540	813-545-5540	tcc_inc@live.com	3902 E POWHATAN AVE	TAMPA	FL	33610	JANITORIAL SERVICES AND WASTE COLLECTION, TREE TRIMMING, MOWING	463223645	**SLBE/BBE**	9/25/2017
1	CARJA CONSTRUCTION, INC	813-304-7158		Carly@puleosconcrete.com	3129 W Idlewild Ave	Tampa	FL	33615	Concrete	463665283	**SLBE**	8/23/2018
2	Excel 4 LLC	407-480-8976		excel4llc@yahoo.com	318 N. John Young Parkway Suite #6	Kissimmee	FL	34741	Concrete and Masonry	454149326	**BBE**	8/22/2018
3	Parking Lot Striping Service Inc.	813-623-1454	813-664-0140	fernandoplss@aol.com	3901 E LAKE AVE	TAMPA	FL	33610	CONCRETE AND ASPHALT WORK, CLEARING & GRUBBING, SIDEWALKS	260324264	**SLBE**	5/14/2017

African American/Black Business Enterprises (BBE) may count toward the subcontract goal. Refer to MBD Form 70-Procurement Guidelines

Report Date: December 8, 2016

Subcontract Goal Contact List: SLBEs and Underutilized WMBEs
(**The Underutilized WMBE Industry Category for Subcontracts is Construction - BBE Certified)

Project 17-C-00008 (Stormwater Construction - Citywide FY 2017)

#'s	Business Name	Phone	Fax	Email	Address 1	City	State	Zip	Business Description	FEIN	Certification Type	Expiration Date
4	Powell Concrete, LLC	321-250-0233	863-496-1227	y.winfield@yahoo.com	4755 Laurel Ave	Kissimmee	FL	34758	Concrete-Flat Work; Sidewalks	830467921	**BBE**	4/26/2018
5	Quick Construction Solutions, LLC	813-377-9997	813-374-5849	quickcs@outlook.com	4501 N. Saint Vincent St.	Tampa	FL	33614	Concrete, Sidewalks	900972890	**SLBE**	3/17/2017

African American/Black Business Enterprises (BBE) may count toward the subcontract goal. Refer to MBD Form 70-Procurement Guidelines

Report Date: December 8, 2016

Instructions Regarding Use of the SLBE Goal Contact List

Bidders must solicit a subcontracting bid from ALL of the firms listed on the SLBEs list provided within the Specifications, and provide documentation of emails, faxes, phone calls, letters, or other communication with the firms as a first step in demonstrating Good-Faith Efforts to achieve the goal set for SLBE participation on this contract.

The list is formatted to facilitate e-mailing of a solicitation to the listed firms by copying and pasting the email addresses.

The SLBE participation Goal is based upon the availability of the certified firms indicated on the contact list. The Goal and Requirements of the City's Equal Business Opportunity Program are stated in the Bid/Contract Document, Specifications.

SOLICITATION FOR SUBCONTRACTOR QUOTES

From:
OUR COMPANY NAME:
TELEPHONE NUMBER:
ADDRESS:
FAX NUMBER:
E-MAIL ADDRESS:

To Subcontractor:

Our firm is in the process of preparing a bid for a **City of Tampa Contract**. Please accept this notice as our request for quotes for the scope of work identified below. Please respond to this request by filling in the information below and returning via e-mail or fax to the address or number provided. Please contact us if you need any assistance in obtaining bonding, lines of credit, insurance, assistance in obtaining necessary equipment, supplies, materials, participation in a City-sponsored mentor-protégé program, or if you have any questions.

Plans and Specs for this project are posted at:
http://www.tampagov.net/dept_contract_administration/programs_and_services/construction_project_bidding/

CONTRACT NO.:
CONTRACT NAME:
CITY'S BID OPENING DATE:
DEADLINE FOR YOUR SUBCONTRACTOR BID OR RESPONSE:
SPECIFIC SCOPE OF WORK:

Please complete and submit with your subcontract bid or response:
YOUR FIRM'S NAME:
MAILING ADDRESS:
CITY:
STATE:
ZIP:
FAX NUMBER:
E-MAIL ADDRESS:
__Yes, my company is interested in quoting this project for the following items of work:

__No, my company will not quote this project for the following reason(s):

(Sample Suggested Sub Solicitation 3-9-9 Tampa MBDO)

PROPOSAL

To the Mayor and City Council of the City of Tampa, Florida:

Legal Name of Bidder: _____

Bidder's Fictitious Name*, if applicable*: _____

Bidder is a/an: ☐ Individual ☐ Partnership* ☐ Joint Venture* ☐ LLC ☐ Corp. ☐ Other:

Bidder is organized under the laws of: ☐ State of Florida ☐ Other:

Bidder Mailing Address: _____

Bidder's Federal Employee Identification No. (FEI/EIN): _____

Bidder's License No.:_____ Bidder's FDOS (SUNBIZ) Doc. No.*:* _____

(See Ch. 489. FS; use entity's, individual's only if applicable)

Bidder Contact Name**: _____ Email:_____ Phone: (_____) _____

Bidder's own initial application for employment has criminal history screening practices similar in nature to the practices contained in Chapter 12, Article VI, City of Tampa Code *(Responses, whether "Yes" or "No", are for informational purposes only and will not be used as a basis of award or denial, nor as a basis for any protest)*: ☐Yes ☐No

The below named person, appearing before the undersigned authority and after being first duly sworn, for him/herself and on behalf of the entity submitting this Proposal does hereby affirm and declare as follows:

(1) He/She is of lawful age and is authorized to act on behalf of Bidder (the individual, partnership, corporation, entity, etc. submitting this Proposal) and that all statements made in this document are true and correct to the best of my knowledge.

(2) If Bidder is operating under a fictitious name, Bidder has currently complied with any and all laws and procedures governing the operation of businesses under fictitious names in the State of Florida

(3) No person or entity other than Bidder has any interest in this Proposal or in the Contract proposed to be entered into.

(4) This Proposal is made without any understanding, agreement, or connection with any person or entity making Proposal for the same purposes, and is in all respects fair and without collusion or fraud.

(5) Bidder is not in arrears to the City of Tampa, upon debt or contract, and is not a defaulter, as surety or otherwise, upon any obligation to the City of Tampa.

(6) That no officer or employee or person whose salary is payable in whole or in part from the City Treasury is, shall be or become interested, directly or indirectly, as a contracting party, partner, stockholder, surety or otherwise, in this Proposal, or in the performance of the Contract, or in the supplies, materials, or equipment and work or labor to which it relates, or in any portion of the profits thereof.

(7) Bidder has carefully examined and fully understands the Solicitation and has full knowledge of the scope, nature, and quality of the work to be performed; furthermore, Bidder has carefully examined the site of the work and that, from his own investigations, he has satisfied himself as to the nature and location of the work, the character, quality, and quantity of materials and the kinds and extent of equipment and other facilities needed for the performance of the work, the general and local conditions and all difficulties to be encountered, and all other items which may, in any way, affect the work or its performance.

(8) Bidder (including its principals) ☐ has | ☐ has NOT been debarred or suspended from contracting with a public entity.

(9) Bidder ☐ has | ☐ has NOT implemented a drug-free workplace program that meets the requirements of Section 287.087, Florida Statutes.

(10) Bidder has carefully examined and fully understands all the component parts of the Contract Documents and agrees Bidder will execute the Contract, provide the required Public Construction Bond, and will fully perform the work in strict accordance with the terms of the Contract and Contract Documents therein referred to for the following prices, to wit:

* If a Partnership or Joint Venture, attach Partnership or Joint Venture Agreement.

** Someone the City may contact with questions/correspondence regarding this Solicitation and/or permits.

Item No.	Description	Unit	Approx. Quantity	Unit Price in Words		Unit Price		Total Computed Price
Schedule A	STORMWATER							
104	SILT AND EROSION CONTROL	LF	1400		$		$	
104.15	SOIL TRACKING AND PREVENTION	EA	3		$		$	
104.18	INLET PROTECTION SYSTEM	EA	4		$		$	
105.1	ROOT PRUNING	LF	160		$		$	
105.2A	TREE REMOVAL - 4"-8"	EA	8		$		$	
105.2B	TREE REMOVAL - 9"-18"	EA	21		$		$	
105.2C	TREE REMOVAL - 19"-24"	EA	1		$		$	
105.2D	TREE REMOVAL - 25"-36"	EA	1		$		$	
110.1	CLEARING & GRUBBING POND SITE	AC	5.8		$		$	
110.3	GROUT EX. STORMWATER PIPE LATERALS	CY	20		$		$	
120	REGULAR EXCAVATION AND DISPOSAL	CY	8100		$		$	
130	CLEAN FILL	CY	2000		$		$	
135	GRADE DITCH	LF	2600		$		$	
400	12"x18" STORMWATER HEADWALL	EA	4		$		$	
425.1	INLETS, DT BOT, TYPE E, <10'	EA	29		$		$	
425.2	MANHOLES, P-7, <10' deep (3.5'x3.5')	EA	16		$		$	

Item No.	Description	Unit	Approx. Quantity	Unit Price in Words		Unit Price		Total Computed Price
425.3	MANHOLES, J-7, <10' deep (4'x4')	EA	7		$		$	
425.4	INLET, COT CURB TYPE 1, <10'	EA	4		$		$	
425.5	INLET, COT CURB TYPE 2, <10'	EA	2		$		$	
425.6	INLET, COT CURB TYPE 3, <10'	EA	7		$		$	
425.7	INLET, COT CURB TYPE BR-1, <10	EA	1		$		$	
425.8	INLET, COT GRATE TYPE T, <10'	EA	12		$		$	
430.1	18" ROUND STORMWATER PIPE (RCP)	LF	885		$		$	
430.11	19"x30" MITERED END SECTION	EA	3		$		$	
430.12	CONNECT STORMWATER PIPE TO EXISTING STRUCTURE	EA	12		$		$	
430.13	REMOVAL OF EXISTING STORMWATER STRUCTURE	EA	5		$		$	
430.2	24" ROUND STORMWATER PIPE (RCP)	LF	100		$		$	
430.3	24" ROUND STORMWATER PIPE (CLASS IV) (RCP)	LF	403		$		$	
430.4	12"x18" ELLIPTICAL STORMWATER PIPE (CLASS IV) (RCP)	LF	1772		$		$	
430.5	14"x23" ELLIPTICAL STORMWATER PIPE (ERCP)	LF	227		$		$	
430.6	19"x30" ELLIPTICAL STORMWATER PIPE (ERCP)	LF	1285		$		$	
430.7	19"x30" ELLIPTICAL STORMWATER PIPE (CLASS IV) (ERCP)	LF	242		$		$	
430.9	12"x18" MITERED END SECTION	EA	9		$		$	

Item No.	Description	Unit	Approx. Quantity	Unit Price in Words		Unit Price		Total Computed Price
436	12" TRENCH DRAIN	LF	1277		$		$	
550.1	REMOVE AND RESET FENCE	LF	30		$		$	
550.2	6' HIGH CHAINLINK FENCE	LF	1600		$		$	
550.3	6' HIGH WOOD FENCE	LF	230		$		$	
590	TEMP. IRRIGATION SYSTEM	EA	1		$		$	
8901	SOD - AUGUSTINE	SY	3176		$		$	
8902	SOD - BAHIA	SY	16749		$		$	
8903	Hydroseeding	SY	5500		$		$	
9260.4	4" Oak	EA	12		$		$	
9260.5	6" Oak	EA	12		$		$	
						SUBTOTAL SCHED. A	$	
Schedule B	TRANSPORTATION							
160	STABILIZATION - LBR 40 SUBBASE	SY	1,261		$		$	
285	CRUSHED CONCRETE BASE	CY	167		$		$	
285.706	BASE OPTIONAL (BASE GROUP 06)	SY	611		$		$	
327	MECHANICAL MILLING 1-IN INCREMENTS	SY/IN	4,350		$		$	
334	SUPERPAVE ASPHALTIC CONC, TRAFFIC B	TN	235		$		$	
334.113	SUPERPAVE ASPHALTIC CONC, TRAFFIC C	TN	67		$		$	
337	SUPERPAVE ASPHALTIC CONC, SP9.5 PER INCH	SY/IN	8,788		$		$	
520.6	Furnish and install Type “D” concrete curb	LF	1,070		$		$	

Item No.	Description	Unit	Approx. Quantity	Unit Price in Words		Unit Price		Total Computed Price
520.110	CONCRETE CURB AND GUTTER TYPE "F"	LF	100		$		$	
522.1	SIDEWALK CONCRETE, 4" THICK (3000 psi)	SY	852		$		$	
522.2	SIDEWALK CONCRETE, 6" THICK (DRIVEWAYS) (3000psi)	SY	2,832		$		$	
9250	ADA Compliant Ramps	EA	11		$		$	
						SUBTOTAL SCHED. B	$	
Schedule C	WATER ITEMS							
2102	F&I 8" ductile iron pipe offset - all inclusive with tap (30' in length)	EA	1		$		$	
2103	F&I 12" ductile iron pipe offset - all inclusive with tap (30' in length)	EA	2		$		$	
2104	F&I 6" DIP - polywrap w fittings and restraints - all inclusive with tap	LF	519		$		$	
2105	F&I 8" DIP - polywrap w fittings and restraints - all inclusive with tap	LF	177		$		$	
2200	F&I 2" HDPE tubing by HDD w/HDPE adapters and HDPE fittings at various depths - all inclusive with tap (30' in length)	EA	3		$		$	
2501	Remove 4-12" diameter abandon water pipe	LF	539		$		$	
3000	F&I 4" W-A or FL restraints	EA	1		$		$	
3040	F&I 4" bell and MJ Restrant on ex. Pipe	EA	6		$		$	
3042	F&I 8" bell and MJ Restrant on ex. Pipe	EA	9		$		$	
5000	F&I full fire hydrant assembly on new or existing mains with posts	EA	1		$		$	
5001	Remove and relocate fire hydrant	EA	1		$		$	
6002	F&I 6" gate or tapping valve with box on DIP, CIP or PVCP	EA	3		$		$	
6003	F&I 8" gate or tapping valve with box on DIP, CIP or PVCP	EA	1		$		$	
6104	F&I 8" Linestop on Existing Water Main	EA	1		$		$	

Item No.	Description	Unit	Approx. Quantity	Unit Price in Words		Unit Price		Total Computed Price
9930	Furnish, and install precast thrust blocks	EA	2		$		$	
						SUBTOTAL SCHED. C	$	
Schedule D	WASTEWATER							
900.1	8" Dia. PVC Pipe (C-900, DR-18)	LF	10		$		$	
1706	6-Inch Diameter PVC Pipe House Lateral (SDR-35) (<30' in length)	EA	1		$		$	
2800	8-Inch Diameter, Ductile Iron Pipe, Sewer FM offset (30' in length)	EA	1		$		$	
4660	6-Inch Diameter, SDR-35, PVC Clean-out and cover	EA	1		$		$	
						SUBTOTAL SCHED. D	$	
	CONTINGENCIES				$		$	
100	CONTINGENCY - transporation	LS	1		$	30,000.00	$	30,000.00
100	CONTINGENCY - stormwater	LS	1		$	350,000.00	$	350,000.00
					$	SUBTOTAL CONTINGENCIES	$	
101	MOBILIZATION - 5% of subtotal A, B, C, D & Contingencies	LS	1		$		$	
102	MAINTENANCE OF TRAFFIC - 8% of subtotal A, B, C, D & Contingencies	LS	1		$		$	
						GRAND TOTAL	$	

Computed Total Price in Words: _____

_____dollars and _____ cents.

Computed Total Price in Figures: $_____

Bidder acknowledges that the following addenda have been received and that the changes covered by the addendum(s) have been taken into account in this proposal: #1 ____ #2 ____ #3 ____ #4 ____ #5 ____ #6 ____ #7 ____ #8 ____.

Bidder acknowledges the requirements of the City of Tampa's Equal Business Opportunity Program.

Bidder acknowledges that it is aware of Florida's Trench Safety Act (Sections 553.60-553.64, Florida Statutes), and agrees that Bidder together with any involved subcontractors will comply with all applicable trench safety standards. Bidder further acknowledges that included in the various items of this Proposal and the total bid price (as applicable) are costs for complying with the Trench Safety Act. Bidder further identifies the costs and methods summarized below:

	Trench Safety Measure (Description)	Unit of Measure (LF, SY)	Unit Quantity	Unit Cost	Extended Cost
A.					
B.					
C.					

Total Cost: $ _____

Accompanying this Proposal is a certified check, cashier's check or Tampa Bid Bond (form included herein must be used) for at least five percent (5%) of the total amount of the Proposal which check shall become the property of the City, or which bond shall become forthwith due and payable to the City, if this Proposal shall be accepted by the City and the Bidder shall fail to enter into a legally binding contract with and to furnish the required Public Construction Bond to the City within twenty (20) days after the date of its receipt of written Notice of Award by the City so to do.

FAILURE TO COMPLETE THE ABOVE MAY RESULT IN THE PROPOSAL BEING DECLARED NON-RESPONSIVE.

[SEAL]

Name of Bidder:_____

Authorized Signature:_____

Signer's Printed Name:_____

Signer's Title: _____

STATE OF _____

COUNTY OF _____

For an entity: The forgoing instrument was sworn (or affirmed) before me this ____ day of _____, 20____ by _____ as _____ of _____, a/n □ Partnership □ Joint Venture □ LLC □ Corp □ Other:_____, on behalf of such entity. Such individual is □ personally known to me or □ produced a/n _____ state driver's license as identification.

For an individual: The forgoing instrument was sworn (or affirmed) before me this ____ day of _____, 20____ by _____, who is □ personally known to me or □ produced a/n _____ state driver's license as identification.

[NOTARY SEAL]

_____

Notary Public, State of _____

Notary Printed Name: _____

Commission No.: _____

My Commission Expires: _____

Good Faith Effort Compliance Plan Guidelines

for Women/Minority Business Enterprise\Small Local Business Enterprise Participation
City of Tampa - Equal Business Opportunity Program
(MBD Form 50 – detailed instructions on page 2 of 2)

Contract Name_____ Bid Date _____

Bidder/Proposer_____

Signature _____ Date _____

Name _____ Title _____

The Compliance Plan with attachments is a true account of Good Faith Efforts (GFE) made to achieve the participation goals as specified for Women/Minority Business Enterprises/Small Local Business Enterprises (WMBE/SLBE) on the referenced contract:

□ The WMBE/SLBE participation Goal is Met or Exceeded. See DMI Forms 10 and 20 which accurately report all subcontractors solicited and all subcontractors to-be-utilized.

□ The WMBE/SLBE participation Goal is Not Achieved. The following list is an overview of the baseline GFE action steps already performed. Furthermore, it is understood that these GFE requirements are weighted in the compliance evaluation based on the veracity and demonstrable degree of documentation provided with the bid/proposal:

(Check applicable boxes below. Must enclose supporting documents accordingly with remarks)

(1) Solicited through reasonable and available means the interest of WMBE/SLBEs that have the capability to perform the work of the contract. The Bidder or Proposer must solicit this interest within sufficient time to allow the WMBE/SLBEs to respond. The Bidder or Proposer must take appropriate steps to follow up initial solicitations with interested WMBE/SLBEs. □ See DMI report forms for subcontractors solicited. □ See enclosed supplemental data on solicitation efforts. □ Qualifying Remarks:

(2) Provided interested WMBE/SLBEs with adequate, specific scope information about the plans, specifications, and requirements of the contract, including addenda, in a timely manner to assist them in responding to the requested-scope identified by bidder/proposer for the solicitation. □ See enclosed actual solicitations used. □ Qualifying Remarks:

(3) Negotiated in good faith with interested WMBE/SLBEs that have submitted bids (e.g. adjusted quantities or scale). Documentation of negotiation must include the names, addresses, and telephone numbers of WMBE/SLBEs that were solicited; the date of each such solicitation; a description of the information provided regarding the plans and specifications for the work selected for subcontracting; and evidence as to why agreements could not be reached with WMBE/SLBEs to perform the work. Additional costs involved in soliciting and using subcontractors is not a sufficient reason for a bidder/proposer's failure to meet goals or achieve participation, as long as such costs are reasonable. Bidders are not required to accept excessive quotes in order to meet the goal.
□ DMI Utilized Forms for sub-(contractor/consultant) reflect genuine negotiations □ This project is an RFQ/RFP in nature and negotiations are limited to clarifications of scope/specifications and qualifications. □ See enclosed documentation. □ Qualifying Remarks:

(4) Not rejecting WMBE/SLBEs as being unqualified without justification based on a thorough investigation of their capabilities. The WMBE/SLBEs standing within its industry, membership in specific groups, organizations / associations and political or social affiliations are not legitimate causes for rejecting or not soliciting bids to meet the goals.
□ Not applicable. □ See attached justification for rejection of a subcontractor's bid or proposal. □ Qualifying Remarks:

(5) Made scope(s) of work available to WMBE/SLBE subcontractors and suppliers; and, segmented portions of the work or material consistent with the available WMBE/SLBE subcontractors and suppliers, so as to facilitate meeting the goal. □ Sub-Contractors were allowed to bid on their own choice of work or trade without restriction to a pre-determined portion. □ See enclosed comments. □ Qualifying Remarks:

(6) Made good faith efforts, despite the ability or desire of Bidder/Proposer to perform the work of a contract with its own forces/organization. A Bidder/Proposer who desires to self-perform the work of a contract must demonstrate good faith efforts if the goal has not been met. □ Sub-Contractors were not prohibited from submitting bids/proposals and were solicited on work typically self-performed by the prime. □ Qualifying Remarks:

(7) Segmented portions of the work to be performed by WMBE/SLBEs in order to increase the likelihood that the goals will be met. This includes, where appropriate, breaking out contract work items into economically feasible units (quantities/scale) to facilitate WMBE/SLBE participation, even when the Bidder/Proposer might otherwise prefer to perform these work items with its own forces. □ Sub-Contractors were allowed to bid on their own choice of work or trade without restriction to a pre-determined portion. □ Sub-Contractors were not prohibited from submitting bids/proposals and were solicited on work typically self-performed by the prime. □ See enclosed comments. □ Qualifying Remarks:

(8) Made efforts to assist interested WMBE/SLBEs in obtaining bonding, lines of credit, or insurance as required by the city or contractor.
□ See enclosed documentation on initiatives undertaken and methods to accomplish. □ Qualifying Remarks:

(9) Made efforts to assist interested WMBE/SLBEs in obtaining necessary equipment, supplies, materials, or related assistance or services, including participation in an acceptable mentor-protégé program. □ See enclosed documentation of initiatives and/or agreements. □ Qualifying Remarks:

(10) Effectively used the services of the City and other organizations that provide assistance in the recruitment and placement of WMBE/SLBEs.
□ See enclosed documentation. □ The following services were used:

Note: Provide any unsolicited information that will support the Bid/RFP Compliance Evaluation. □ Named Documents Are:

Participation Plan: Guidance for Complying with Good Faith Efforts Outreach

(page 2 of 2)

1. All firms on the WMBE/SLBE Goal Setting List must be solicited and documentation provided for email, fax, letters, phone calls, and other methods of outreach/communication with the listed firms. The DMI Solicited and DMI-Utilized forms must be completed for all firms solicited or utilized. Other opportunities for subcontracting may be explored by consulting the City of Tampa MBD Office and/or researching the on-line Diversity Management Business System Directory for Tampa certified WMBE/SLBE firms.

2. Solicitation of WMBE/SLBEs, via written or electronic notification, should provide specific information on the services needed, where plans can be reviewed and assistance offered in obtaining these, if required. Solicitations should be sent a minimum of a week (i.e. 5 business days or more) before the bid/proposal date. Actual copies of the bidder's solicitation containing their scope specific instructions should be provided.

3. With any quotes received, a follow-up should be made when needed to confirm detail scope of work. For any WMBE/SLBE low quotes rejected, an explanation Shall be provided detailing negotiation efforts.

4. If a low bid WMBE/SLBE is rejected or deemed unqualified the contractor must provide an explanation and supporting documentation for this decision.

5. Prime Shall break down portions of work into economical feasible opportunities for subcontracting. The WMBE/SLBE directory may be useful in identifying additional subcontracting opportunities and firms not listed in the "WMBE/SLBE Goal Setting Firms List."

6. Contractor Shall not preclude WMBE/SLBEs from bidding on any part of work, even if the Contractor may desire to self-perform the work.

7. Contractor Shall avoid relying solely on subcontracting out work-scope where WMBE/SLBE availability is not sufficient to attain the pre-determined subcontract goal set for the Bid or when targeted sub-consultant participation is stated within the RFP/RFQ.

8. In its solicitations, the Bidder should offer assistance to WMBE/SLBEs in obtaining bonding, insurance, et cetera, if required of subcontractors by the City or Prime Contractor.

9. In its solicitation, the Bidder should offer assistance in obtaining equipment for a specific job to WMBE/SLBEs, if needed.

10. Contractor should use the services offered by such agencies as the City of Tampa Minority and Small Business Development Office, Hillsborough County Entrepreneur Collaborative Center, Hillsborough County Economic Development Department's MBE/SBE Program and the NAACP Empowerment Center to name a few for the recruitment and placement of WMBEs/SLBEs.

Failure to Complete, Sign and Submit Both Forms 10 & 20 SHALL render the Bid or Proposal Non-Responsive

Page 1 of 4 – DMI Solicited/Utilized Schedules
City of Tampa – Schedule of All Solicited Sub-(Contractors/Consultants/Suppliers)
(FORM MBD-10)

Contract No.:_____ Contract Name:_____
Company Name:_____ Address:_____
Federal ID:_____ Phone:_____ Fax:_____ Email:_____

Check applicable box(es). Detailed Instructions for completing this form are on page 2 of 4.
[ ] No Firms were contacted or solicited for this contract.
[ ] No Firms were contacted because:_____
[ ] See attached list of additional Firms solicited and all supplemental information (List must comply to this form)
Note: Form MBD-10 must list ALL subcontractors solicited including Non-minority/small businesses

NIGP Code Categories: Buildings = 909, General = 912, Heavy = 913, Trades = 914, Architects = 906, Engineers & Surveyors = 925, Supplier = 912-77

S = SLBE W=WMBE O = Neither Federal ID	Company Name Address Phone, Fax, Email	Type of Ownership (F=Female M=Male) BF BM = African Am. HF HM = Hispanic AF AM = Asian Am. NF NM = Native Am. CF CM = Caucasian	Trade or Services NIGP Code (listed above)	Contact Method L=Letter F=Fax E=Email P=Phone	Quote or Response Received Y/N

Failure to Complete, Sign and Submit this form with your Bid or Proposal Shall render the Bid Non-Responsive (Do Not Modify This Form)

It is hereby certified that the information provided is an accurate and true account of contacts and solicitations for sub–contracting opportunities on this contract.

Signed:_____ Name/Title:_____ Date:_____

Failure to Complete, Sign and Submit Both Forms 10 & 20 SHALL render the Bid or Proposal Non-Responsive
Forms must be included with Bid / Proposal

Instructions for completing The Sub-(Contractors/Consultants/ Suppliers) Solicited Form (Form MBD-10)

This form must be submitted with all bids or proposals. **All** subcontractors (regardless of ownership or size) solicited and subcontractors from whom unsolicited quotations were received must be included on this form. The instructions that follow correspond to the headings on the form required to be completed. Note: Ability or desire to self-perform all work shall not exempt the prime from Good Faith Efforts to achieve participation.

- **Contract No.** This is the number assigned by the City of Tampa for the bid or proposal.
- **Contract Name.** This is the name of the contract assigned by the City of Tampa for the bid or proposal.
- **Contractor Name.** The name of your business and/or doing business as (dba) if applicable.
- **Address.** The physical address of your business.
- **Federal ID.** FIN. A number assigned to your business for tax reporting purposes.
- **Phone.** Telephone number to contact business.
- **Fax.** Fax number for business.
- **Email.** Provide email address for electronic correspondence.
- **No Firms were contacted or solicited for this contract.** Checking the box indicates that a pre-determined Subcontract Goal or Participation Plan Requirement was not set by the City resulting in your business not using subcontractors and will self-perform all work. If during the performance of the contract you employ subcontractors, the City must pre-approve subcontractors. Use of the "Sub-(Contractors/Consultants/Suppliers) Payments" form (MBD Form-30) must be submitted with every pay application and invoice. Note: Certified SLBE or WMBE firms bidding as Primes are not exempt from outreach and solicitation of subcontractors.
- **No Firms were contacted because.** Provide brief explanation why no firms were contacted or solicited.
- **See attached documents.** Check box, if after you have completed the DMI Form in its entirety, you need more space to list additional firms and/or if you have supplemental information/documentation relating to the form. All DMI data not submitted on the MBD Form-10 must be in the same format and have all requested data from MBD Form-10 included.

The following instructions are for information of any and all subcontractors solicited.

- **"S" = SLBE, "W" = WMBE.** Enter "**S**" for firms Certified by the City as Small Local Business Enterprises and/or "**W**" for firms Certified by the City as either Women/Minority Business Enterprise; **"O" = Non-certified others**.
- **Federal ID.** FIN. A number assigned to a business for tax reporting purposes. This information is critical in proper identification and payment of the contractor/subcontractor.
- **Company Name, Address, Phone & Fax**. Provide company information for verification of payments.
- **Type of Ownership.** Indicate the Ethnicity and Gender of the owner of the subcontracting business.
- **Trade, Services, or Materials** indicate the trade, service, or materials provided by the subcontractor. NIGP codes aka "National Institute of Governmental Purchasing" are listed at top section of document.
- **Contact Method L=letter, F=fax, E=Email, P=Phone.** Indicate with letter the method(s) of soliciting for bid.
- **Quote or Resp. (response) Rec'd (received) Y/N**. Indicate "Y" Yes if you received a quotation or if you received a response to your solicitation. Indicate "N" No if you received no response to your solicitation from the subcontractor. Must keep records: log, ledger, documentation, etc. that can validate/verify.

If additional information is required or you have questions, please contact the Equal Business Opportunity Program - Minority and Small Business Development Office at (813) 274-5522.

Failure to Complete, Sign and Submit Both Forms 10 & 20 SHALL render the Bid or Proposal Non-Responsive

City of Tampa – Schedule of All To-Be-Utilized Sub-(Contractors/Consultants/Suppliers)

(FORM MBD-20)

Contract No.:_____ Contract Name:_____
Company Name:_____Address:_____
Federal ID:_____ Phone:_____ Fax:_____ Email:_____

Check applicable box(es). Detailed Instructions for completing this form are on page 4 of 4.

[ ] See attached list of additional Firms Utilized and all supplemental information (List must comply to this form)
Note: Form MBD-20 must list ALL subcontractors To-Be-Utilized including Non-minority/small businesses

[ ] No Subcontracting/consulting (of any kind) will be performed on this contract.

[ ] No Firms are listed to be utilized because:_____

NIGP Code General Categories: Buildings = 909, General = 912, Heavy = 913, Trades = 914, Architects = 906, Engineers & Surveyors = 925, Supplier = 912-77

Enter "S" for firms Certified as Small Local Business Enterprises, "W" for firms Certified as Women/Minority Business Enterprise, "O" for Other Non-Certified

S = SLBE W=WMBE O =Neither Federal ID	Company Name Address Phone, Fax, Email	Type of Ownership (F=Female M=Male) BF BM = African Am. HF HM = Hispanic Am. AF AM = Asian Am. NF NM = Native Am. CF CM = Caucasian	Trade, Services, or Materials NIGP Code Listed above	$ Amount of Quote. Letter of Intent (LOI) if available	Percent of Scope or Contract %

Failure to Complete, Sign and Submit this form with your Bid or Proposal Shall render the Bid Non-Responsive. (Do Not Modify This Form)

Total ALL Subcontract / Supplier Utilization $_____
Total SLBE Utilization $ _____
Total WMBE Utilization $ _____
Percent SLBE Utilization of Total Bid/Proposal Amt. _____% Percent WMBE Utilization of Total Bid/Proposal Amt. _____%

It is hereby certified that the following information is a true and accurate account of utilization for sub-contracting opportunities on this Contract.

Signed:_____ Name/Title:_____ Date:_____

Failure to Complete, Sign and Submit Both Forms 10 & 20 SHALL render the Bid or Proposal Non-Responsive
Forms must be included with Bid / Proposal

Instructions for completing The Sub-(Contractors/Consultants/ Suppliers) to be Utilized Form

(Form MBD-20)

This form must be submitted with all bids or proposals. All subcontractors (regardless of ownership or size) projected to be utilized must be included on this form. Note: Ability or desire to self-perform all work shall not exempt the prime from Good Faith Efforts to achieve participation.

Contract No. This is the number assigned by the City of Tampa for the bid or proposal.

- **Contract Name.** This is the name of the contract assigned by the City of Tampa for the bid or proposal.
- **Contractor Name.** The name of your business and/or doing business as (dba) if applicable.
- **Address.** The physical address of your business.
- **Federal ID.** FIN. A number assigned to your business for tax reporting purposes.
- **Phone.** Telephone number to contact business.
- **Fax.** Fax number for business.
- **Email.** Provide email address for electronic correspondence.
- **No Subcontracting/consulting (of any kind) will be performed on this contract.** Checking box indicates your business will not use subcontractors when no Subcontract Goal or Participation Plan Requirement was set by the City, but will self-perform all work. When subcontractors are utilized during the performance of the contract, the "Sub-(Contractors/Consultants/Suppliers) Payments" form (MBD Form-30) must be submitted with every pay application and invoice. Note: certified SLBE or WMBE firms bidding as Primes are not exempt from outreach and solicitation of subcontractors, including completion and submitting Form-10 and Form-20.
- **No Firms listed To-Be-Utilized.** Check box; provide brief explanation why no firms were retained when a goal or participation plan requirement was set on the contract. Note: mandatory compliance with Good Faith Effort outreach (GFECP) requirements applies (MBD Form-50) and supporting documentation must accompany the bid.
- **See attached documents.** Check box, if after completing the DMI Form in its entirety, you need more space to list additional firms and/or if you have supplemental information/documentation relating to the scope/value/percent utilization of subcontractors. Reproduce copies of MBD-20 and attach. All data not submitted on duplicate forms must be in the same format and content as specified in these instructions.

The following instructions are for information of Any and All subcontractors To Be Utilized.

- **Federal ID.** FIN. A number assigned to a business for tax reporting purposes. This information is critical in proper identification of the subcontractor.
- **"S" = SLBE, "W" = WMBE.** Enter "**S**" for firms Certified by the City as Small Local Business Enterprises and/or "**W**" for firms Certified by the City as Women/Minority Business Enterprise; **"O" = Non-certified others**.
- **Company Name, Address, Phone & Fax**. Provide company information for verification of payments.
- **Type of Ownership.** Indicate the Ethnicity and Gender of the owner of the subcontracting business.
- **Trade, Services, or Materials (NIGP code if Known)** Indicate the trade, service, or material provided by the subcontractor. Abbreviated list of NIGP is available at http:/www.tampagov.net/mbd "Information Resources".
- **Amount of Quote, Letters of Intent** (required for both SLBEs and WMBEs).
- **Percent of Work/Contract.** Indicate the percent of the total contract price the subcontract(s) represent. For CCNA only (i.e. Consultant A/E Services) you must indicate subcontracts as percent of total scope/contract.
- **Total Subcontract/Supplier Utilization.** – Provide total dollar amount of all subcontractors/suppliers projected to be used for the contract. (Dollar amounts may be optional in CCNA depending on solicitation format).
- **Total SLBE Utilization.** Provide total dollar amount for all projected SLBE subcontractors/Suppliers used for this contract. (Dollar amounts may be optional in CCNA proposals depending on the solicitation format).
- **Total WMBE Utilization.** Provide total dollar amount for all projected WMBE subcontractors/Suppliers used for this contract. (Dollar amounts may be optional in CCNA proposals depending on the solicitation format).
- **Percent SLBE Utilization.** Total amount allocated to SLBEs divided by the total bid/proposal amount.
- **Percent WMBE Utilization.** Total amount allocated to WMBEs divided by the total bid/proposal amount.

If additional information is required or you have questions, please contact the Equal Business Opportunity Program - Minority and Small Business Development Office at (813) 274-5522.

TAMPA BID BOND
Contract 17-C-00008; Stormwater Construction Citywide - FY17 - Rebid

KNOW ALL MEN BY THESE PRESENTS, that we, _____

_____

(hereinafter called the Principal) and _____

(hereinafter called the Surety) a Corporation chartered and existing under the laws of the State of _____, with its principal offices in the City of _____, and authorized to do business in the State of Florida, are held and firmly bound unto the City of Tampa, a Municipal Corporation of Hillsborough County, Florida, in the full and just sum of 5% of the amount of the (Bid) (Proposal) good and lawful money of the United States of America, to be paid upon demand of the City of Tampa, Florida, to which payment will and truly to be made we bind ourselves, our heirs, executors, administrators, successors, and assigns, jointly and severally and firmly these presents.

WHEREAS, the Principal is about to submit, or has submitted to the City of Tampa, Florida, a Proposal for the construction of certain facilities for the City designated Contract 17-C-00008, Stormwater Construction Citywide - FY17 - Rebid.

WHEREAS, the Principal desires to file this Bond in accordance with law, in lieu of a certified Bidder's check otherwise required to accompany this Proposal.

NOW, THEREFORE: The conditions of this obligation are such that if the Proposal be accepted, the Principal shall, within twenty (20) days after the date of receipt of written Notice of Award, execute a contract in accordance with the Proposal and upon the terms, conditions and price set forth therein, in the form and manner required by the City of Tampa, Florida and execute a sufficient and satisfactory Public Construction Bond payable to the City of Tampa, Florida in an amount of one hundred percent (100%) of the total contract price, in form and with security satisfactory to said City, then this Bid Bond obligation is to be void; otherwise to be and remain in full force and virtue in law, and the Surety shall, upon failure of the Principal to comply with any or all of the foregoing requirements within the time specified above, immediately pay to the aforesaid City, upon demand, the amount thereof, in good and lawful money of the United States of America, not as a penalty, but as liquidated damages.

IN TESTIMONY THEREOF, the Principal and Surety have caused these presents to be duly signed and sealed this _____ day of _____, 20___.

Principal _____

BY _____

TITLE _____

BY _____

TITLE _____

(SEAL) _____
Producing Agent

_____
Producing Agent's Address

_____
Name of Agency

_____
The addition of such phrases as "not to exceed" or like import shall render the (Bid) (Proposal)non-responsive.

Revised 2016-08-29

AGREEMENT

For furnishing all labor, materials and equipment, together with all work incidental thereto, necessary and required for the performance of the work for the construction of Contract 17-C-00008 in accordance with your Proposal dated _____, amounting to a total of $_____ as completed in accordance with subsections I-2.09 and I-2.10 of the Instruction to Bidders.

THIS AGREEMENT, made and entered into in triplicate, this ____ day of _____, 20___, between the City of Tampa, Florida, hereinafter called the City, and hereinafter called the Contractor.

WITNESSETH that, in consideration of the mutual stipulations, agreements, and covenants herein contained, the parties hereto have agreed and hereby agree with each other, the Party of the First Part for itself, its successors and assigns, and the Party of the Second Part for itself, or himself, or themselves, and its successors and assigns, or his or their executors, administrators and assigns, as follows:

Contract 17-C-00008; Stormwater Construction Citywide - FY17 - Rebid, shall include, but not be limited to, furnishing all labor, materials and equipment for construction of stormwater infrastructure in various locations within the City of Tampa Stormwater boundaries. Work includes stormwater pipe, stormwater pond construction and excavation, ditch grading, roadway-related improvements, pavement milling and resurfacing, water main and wastewater offsets and replacement, concrete and asphalt driveways, concrete sidewalks, concrete curb and gutter, landscaping, hydroseeding and sodding for seven stormwater projects with all associated work required for a complete project in accordance with the Contract Documents.

Contract Documents referred to in Article 1.01 of this Agreement also includes this volume, applicable standard drawings, the plans and any provisions referred to whether actually attached or not.

TAMPA AGREEMENT

SECTION 1
GENERAL

ARTICLE 1.01 THE CONTRACT

Except for titles, subtitles, headings, running headlines, and tables of contents (all of which are printed herein merely for convenience), the following, except for such portions thereof as may be specifically excluded, constitute the Contract:

The Notice to Bidders;
The Instructions to Bidders, including Special Instructions and General Instructions;
The Proposal;
The Bid Bond;
The Certification of Nonsegregated Facilities;
The Notice of Award;
The Agreement;
The Performance Bond;
The Notice To Proceed;
The Specifications, including the General Provisions, the Workmanship and Materials, the Specific Provisions or the Contract Items
The Plans;
All Supplementary Drawings Issued after award of the Contract;
All Addenda issued by the City prior to the receipt of proposals;
All provisions required by law to be inserted in this Contract, whether actually inserted or not.

ARTICLE 1.02 DEFINITIONS

The following words and terms, or pronouns used in their stead, shall, wherever they appear in this Contract, be construed as follows, unless different meaning is clear from the context:

(a)"City" shall mean the City of Tampa, Florida, represented by its Mayor and City Council, Party of the First Part, or such other City official as shall be duly empowered to act for the City on matters relating to this Contract.

(b)"Contractor" shall mean the Party of the Second Part hereto, whether corporation, firm or individual, or any combination thereof, and its, their, or his successors, personal representatives, executors, administrators, and assigns, and any person, firm or corporation who or which shall at any time be substituted in the place of the Party of the Second Part under this Contract.

(c)"Engineer" shall mean the Director of the Department or his duly authorized representative.

(d)"Consultant" shall mean the engineering or architectural firm or individual employed by the City to consult with and advise the City in the construction of the project.

(e)"Surety" shall mean any person, firm or corporation that has executed as Surety the Contractor's Performance Bond securing the performance of this Contact.

(f)"The Work" shall mean everything expressly or implied required to be furnished and done by the Contractor under the Contract, and shall include both Contract Work and Extra Work.

(g)"Contract Work" shall mean everything expressly or implied required to be furnished and done by the Contractor by any one or more of the Contract parts referred to in Article 1.01 hereof, except Extra Work, as hereinafter defined; it being understood that, in case of any inconsistency in or between any part or parts of this Contract, the Engineer shall determine which shall prevail.

(h)"Contract" or "Contract Documents" shall mean each of the various part of the Contract referred to in Article 1.01 hereof, both as a whole and severally.

(i)"Extra Work" shall mean work other than that required either expressly or implied by the contract in its present form.

(j)"Plans" shall mean only those drawings specifically referred to as such in these documents, or in any Addendum. Drawings issued after the execution of the Contract to explain further, or to illustrate, or to show changes in the work, will be known as "Supplementary Drawings" and shall be binding upon the Contractor with the same force as the Plans.

(k)"Specifications" shall mean all of the directions, requirements, and standards of performance applying to the work, as hereinafter detailed and designated as such, or which may be issued in an addendum.

(l)"Addendum or Addenda" shall mean the additional contract provisions issued in writing prior to the receipt of bids.

(m)"Notice" shall mean written notice. Notice shall be served upon the Contractor, either personally or by leaving the said notice at his residence or with any employee found on the work, or addressed to the Contractor at the residence or place of business given in his proposal and deposited in a postpaid wrapper in any post office box regularly maintained by the United States Post Office.

(n)"Project" shall mean the entire improvement package or related work. The "project" may consist of several different, but related, contracts.

(o)"Site" shall mean, and be limited to, the area upon or in which the Contractor's operations are carried on and such other appropriate areas as may be designed as such by the Engineer.

(p)"Subcontractor" shall mean any person, firm, or corporation, other than employees of the Contractor, who or which contracts with the Contractor to furnish, or actually furnishes labor, or labor and materials, or labor and equipment or labor, materials, and equipment at the site.

(q)Whenever in the Contract the words "directed", "required", "permitted", "ordered", "designated", "prescribed", and words of like import are used, they shall imply the direction, requirement, permission, order, designation, or prescription of the Engineer; and "approved", "acceptable", "satisfactory", "in the judgement of", and words of like import shall mean approved by, or acceptable to, or satisfactory to, or in the judgment of the Engineer.

(r)Whenever in the Contract the word "day" is used, it shall mean calendar day.

(s)"Final Acceptance" shall mean acceptance of the

work as evidenced by an official resolution of the City. Such acceptance shall be deemed to have taken place only if and when an approving resolution has been adopted by the City Council. The final acceptance shall be signed only after the City has assured itself by tests, inspection, or otherwise, that all of the provisions of the Contract have been carried out to its satisfaction.

(t)"Eastern Standard Time" shall be construed as the time being observed in the City on the day proposals are received or other documents issued or signed.

SECTION 2
POWERS OF THE CITY'S REPRESENTATIVES

ARTICLE 2.01 THE ENGINEER

It is covenanted and agreed that the Engineer, in addition to those matters elsewhere herein expressly made subject to his determination, direction, or approval, shall have the power, subject to such express provisions and limitations herein contained as are not in conflict herewith, and subject to review by the Mayor and City Council:

(a)To monitor the performance of the work.

(b)To determine the amount, kind, quality, sequence, and location of the work to be paid for hereunder and, when completed, to measure such work for payment.

(c)To determine all questions of an engineering character in relation to the work, to interpret the Plans, Specifications and Addenda.

(d)To determine how the work of this Contract shall be coordinated with the work of other contractors engaged simultaneously on this project.

(e)To make minor changes in the work as he deems necessary, provided such changes do not result in a net increase in the cost to the City or to the Contractor of the work to be done under the Contract.

(f)To amplify the Plans, add explanatory information and furnish additional Specifications and Drawings consistent with the intent of the Contract Documents.

The power of the Engineer shall not be limited to the foregoing enumeration, for it is the intent of this Contract that all of the work shall be subject to his determinations and approval, except where the determination or approval of someone other than the Engineer is expressly called for herein and except as subject to review by the Mayor and City Council. All orders of the Engineer requiring the Contractor to perform work as Contract work shall be promptly obeyed by the Contractor.

The Engineer shall not, however, have the power to issue an extra work order, and the performance of such work on the order of the Engineer without previously obtaining written confirmation thereof from the Mayor in accordance with Article 7.02 hereof may constitute a waiver of any right to extra compensation therefor. The Contractor is warned that the Engineer has no power to change the terms and provisions of this Contract, except minor changes where such change results in no net increase in the Contract Price.

ARTICLE 2.02 DIRECTOR

The Director of the Department in addition to those matters expressly made subject to his determination, direction or approval in his capacity as "Engineer", shall also have the power:

(a)To review any and all questions in relation to this Contract and its performance, except as herein otherwise specifically provided, and his determination upon such review shall be final and conclusive upon the Contractor.

(b)With the approval of the Mayor and City Council to authorize modifications or changes in the Contract so as to require: (1) the performance of extra work, or (2) the omission of Contract work whenever he deems it in the interest of the City to do so, or both.

(c)To suspend the whole or any part of the work whenever, in his judgment, such suspension is required: (1) in the interest of the City generally, or (2) to coordinate the work of the various Contractors engaged on this project, or (3) to expedite the completion of the entire project, even though the completion of this particular Contract may be thereby delayed, <u>without compensation to the Contractor for such suspension other than extending the time for the completion of the work, as much as it may have been, in the opinion of the City, delayed by such a suspension.</u>

(d)If, before the final acceptance of all the work contemplated herein, it shall be deemed necessary to take over, use, occupy, or operate any part of the completed or partly completed work, the Engineer shall have the right to do so and the Contractor will not, in any way, interfere with or object to the use, occupation, or operation of such work by the City after receipt of notice in writing from the Engineer that such work or part thereof will be used by the City on and after the date specified in such notice. Such taking over, use, occupancy or operation of any part of the completed or partially completed work shall not constitute final acceptance or approval of any such part of the work.

ARTICLE 2.03 NO ESTOPPEL

The City shall not, nor shall any department, officer, agent, or employee thereof, be bound, precluded, or estopped by any determination, decision, acceptance, return, certificate, or payment made or given under or in connection with this Contract by any officer, agent or employee of the City at any time either before or after final completion and acceptance of the work and payment therefor: (a) from showing the true and correct classification, amount, quality, or character of the work done, or that any determination, decision, acceptance, return certificate or payment is untrue, incorrect or improperly made in any particular, or that the work or any part thereof does not in fact conform to the requirements of the Contract Documents, and (b) from demanding and recovering from the Contractor any overpayments made to him or such damages as it may sustain by reason his failure to comply with the requirements of the Contract of Documents, or both.

ARTICLE 2.04 NO WAIVER OF RIGHTS

Neither the inspection, nor any order, measurements or certificate of the City or its employees, officers, or agents, nor by any order of the City for payment of money, nor any money, nor payments for or acceptance of the whole or any part of the work by the City, nor any extension of time, nor any changes in the Contract, Specifications or Plans, nor any possession by the City or its employees shall operate as a

waiver of any provisions of this Contract, nor any power herein provided nor shall any waiver of any breach of this Contract be held as a waiver of any other subsequent breach.

Any remedy provided in this Contract shall be taken and construed as cumulative, namely, in addition to each and every other suit, action, or legal proceeding. The City shall be entitled as of right to an injunction against any breach of the provisions of this Contract.

SECTION 3
PERFORMANCE OF WORK

ARTICLE 3.01 CONTRACTOR'S RESPONSIBILITY

The Contractor shall do all the work and furnish, at his own cost and expense, all labor, materials, equipment, and other facilities, except as herein otherwise provided, as may be necessary and proper for performing and completing the work under this Contract. The Contractor shall be responsible for the entire work until completed and finally accepted by the City.

The work shall be performed in accordance with the true intent and meaning of the Contract Documents. Unless otherwise expressly provided, the work must be performed in accordance with the best modern practice, with materials as specified and workmanship of the highest quality, all as determined by and entirely to the satisfaction of the Engineer.

Unless otherwise expressly provided, the means and methods of construction shall be such as the Contractor may choose, subject, however, to the approval of the Engineer. Only adequate and safe procedure, methods, structures and equipment shall be used. The Engineer's approval or the Engineer's failure to exercise his right thereon shall not relieve the Contractor of obligations to accomplish the result intended by the Contract, nor shall such create a cause of action for damages.

ARTICLE 3.02 COMPLIANCE WITH LAWS

The Contractor must comply with all local, State and Federal laws, rules, ordinances and regulations applicable to this Contract and to the work done hereunder, and must obtain, at his own expense, all permits, licenses or other authorization necessary for the prosecution of the work.

No work shall be performed under this Contract on Sundays, legal holidays or after regular working hours without the express permission of the Engineer. Where such permission is granted, the Engineer may require that such work be performed without additional expense to the City.

ARTICLE 3.03 INSPECTION

During the progress of the work and up to the date of final acceptance, the Contractor shall, at all times, afford the representatives of the City, the Florida Department of Environmental Regulation, and if applicable, the Federal Environmental Protection Agency and the Federal Department of Labor every reasonable, safe and proper facility for inspecting the work done or being done at the site. The inspection of any work shall not relieve the Contractor of any of his obligations to perform proper and satisfactory work as herein specified. Finished or unfinished work found not to be in strict accordance with the Contract shall be replaced as directed by the Engineer, even though such work may have been previously approved and payment made therefor.

The City shall have the right to reject materials and workmanship which are defective or require their correction. Rejected work and materials must be promptly removed from the site, which must at all times be kept in a reasonably clean and neat condition.

Failure or neglect on the part of the City to condemn or reject bad or inferior work or materials shall not be construed to imply an acceptance of such work or materials, if it becomes evident at any time prior to the final acceptance of the work by the City. Neither shall it be construed as barring the City at any subsequent time from the recovery of damages of such a sum of money as may be needed to build anew all portions of the work in which inferior work or improper materials were used, wherever found.

Should it be considered necessary or advisable by the City at any time before final acceptance of the entire work to make examinations of work already completed, by removing or tearing out all or portions of such work, the Contractor shall, on request, promptly furnish all necessary facilities, labor, and material for that purpose. If such work is found to be defective in any material respect, due to the fault of the Contractor or his subcontractors, he shall defray all expenses of such examination and of satisfactory reconstruction. If, however, such work is found to meet the requirements of the Contract, the cost of examination and restoration of the work shall be considered an item of extra work to be paid for in accordance with the provisions of Article 7.02 hereof.

ARTICLE 3.04 PROTECTION

During performance and until final acceptance, the Contractor shall be under an absolute obligation to protect the finished and unfinished work against any damage, loss, or injury. The Contractor shall take proper precaution to protect the finished work from loss or damage, pending completion and the final acceptance of all the work included in the entire Contract, provided that such precaution shall not relieve the Contractor from any and all liability and responsibility for loss or damage to the work occurring before final acceptance by the City. Such loss or damage shall be at the risk of and borne by the Contractor, whether arising from acts or omissions of the Contractor or others. In the event of any such loss or damage, the Contractor shall forthwith repair, replace, and make good the work without extension of time therefor, except as may be otherwise provided herein.

The provisions of this Article shall not be deemed to create any new right of action in favor of third parties against the Contractor or the City.

ARTICLE 3.05 PRESERVATION OF PROPERTY

The Contractor shall preserve from damage all property along the line of the work, or which is in the vicinity of or is in anywise affected by the work, the removal or destruction of which is not called for by the Plans. This applies, but is not limited, to the public utilities, trees, lawn areas, building monuments, fences, pipe and underground structures, public streets (except natural wear and tear of streets resulting from legitimate use thereof by the Contractor), and wherever such property is damaged due to the activities of the Contractor, it shall be immediately restored to its original condition by the Contractor and at his own expense.

In case of failure on the part of the Contractor to restore such property, or make good such damage or injury, the City may, upon forty-eight (48) hour written notice, proceed to repair, rebuild, or otherwise restore such property as may be deemed necessary, and the cost thereof will be deducted from any monies due or which may become due the Contractor under this Contract. Nothing in this clause shall prevent the Contractor from receiving proper compensation for the removal, damage, or replacement of any public or private property not shown on the Plans, when this is made necessary by alteration of grade or alignment authorized by the Engineer, provided that such property has not been damaged through fault of the Contractor, his employees or agents.

ARTICLE 3.06 BOUNDARIES
The Contractor shall confine his equipment, apparatus, the storage of materials, supplies and apparatus of his workmen to the limits indicated on the plans, by law, ordinances, permits or direction of the Engineer.

ARTICLE 3.07 SAFETY AND HEALTH REGULATIONS
The Contractor shall comply with the Department of Labor Safety and Health Regulations for construction promulgated under the Occupational Safety and Health Act of 1970 (PL 91- 596) and under Section 107 of the Contract Work Hours and Safety Standards Act (PL91-54).

ARTICLE 3.08 TAXES
All taxes of any kind and character payable on account of the work done and materials furnished under this Contract shall be paid by the Contractor and shall be deemed to have been included in his bid. The laws of the State of Florida provide that sales and use taxes are payable by the Contractor upon the tangible personal property incorporated in the work and such taxes shall be paid by the Contractor and shall be deemed to have been included in his bid.

ARTICLE 3.09 ENVIRONMENTAL CONSIDERATIONS
The Contractor, in the performance of the work under this Contract, shall comply with all Local, State and Federal laws, statutes, ordinances, rules and regulations applicable to protection of the environment; and, in the event he violates any of the provisions of same, he shall be answerable to the Local, State and Federal agencies designated by law to protect the environment. In the event the City receives, from any of the environmental agencies, a citation which is occasioned by an act or omission of the Contractor or his subcontractor or any officers, employees or agents of either, it is understood and agreed that the Contractor shall automatically become a party-respondent under said citation; and the City immediately shall notify the Contractor and provide him with a copy of said citation.

The Contractor shall comply with the requirements of the citation and correct the offending conditions(s) within the time stated in said citation and further shall be held fully responsible for all fines and/or penalties.

SECTION 4
TIME PROVISIONS

ARTICLE 4.01 TIME OF START AND COMPLETION
The Contractor must commence work within thirty (30) days subsequent to the date of the receipt of the "Notice to Proceed" by the City unless otherwise provided in the Specific Provisions and Special Instructions. Time being of the essence of this Contract, the Contractor shall thereafter prosecute the work diligently, using such means and methods of construction as well as secure its full completion in accordance with the requirements of the Contract Documents no later than the date specified therefor, or on the date to which the time for completion may be extended.

The Contractor must complete the work covered by this Contract in the number of consecutive calendar days set forth in the Instructions to Bidders, unless the date of completion is extended pursuant to the provisions of Article 4.05 hereof. The period for performance shall start from the date of signing of this Agreement by the City.

The actual date of completion will be established after a final inspection as provided in Article 4.07 hereof.

ARTICLE 4.02 PROGRESS SCHEDULE
To enable the work to be laid out and prosecuted in an orderly and expeditious manner, the Contractor shall submit to the Engineer a proposed progress schedule within fifteen (15) days after the award of this Contract.

The schedule shall state the Contract starting date, time for completion and date of completion and shall show the anticipated time of starting and completion of each of the various operations to be performed under this Contract, together with all necessary and appropriate information regarding sequence and correlation of work and an estimated time required for the delivery of all materials and equipment required for the work. The proposed schedule shall be revised as directed by the Engineer until finally approved by him, and, after such approval, shall be strictly adhered to by the Contractor. The approved progress schedule may be changed only with the written permission of the Engineer.

If the Contractor shall fail to adhere to the approved progress schedule or the schedule as revised, he shall promptly adopt such other or additional means and methods of construction as will make up for the time lost, and will assure completion in accordance with the contract time.

ARTICLE 4.03 APPROVAL REQUESTS
From time to time, as the work progresses and in the sequence indicated by the approved schedule, the Contractor must submit to the Engineer a specific request, in writing, for each item of information or approval required of him by the Contract. These requests must be submitted sufficiently in advance of the date upon which the information or approval is actually required by the Contractor to allow for the time the Engineer may take to act upon such submissions or resubmissions. The Contractor shall not have any right to an extension of time on account of delays due to his failure to submit his requests for the required information or the required approval in accordance with these requirements.

ARTICLE 4.04 COORDINATION WITH OTHER CONTRACTORS
During progress of the work, other Contractors may be engaged in performing other work on this project or on other projects on the site. In that event, the Contractor shall coordinate the work to be done hereunder with the work of such other Contractors in such manner as the Engineer may direct.

ARTICLE 4.05 EXTENSION OF TIME
If such an application is made, the Contractor shall be entitled to an extension of time for delay in completion of the work should the Contractor be obstructed or delayed in the commencement, prosecution or completion of any part of said work by any act or delay of the City, or by acts or omissions of other Contractors on this project, or by a riot, insurrection, war, pestilence, acts of public authorities, fire, lightning, hurricanes, earthquakes, tornadoes, floods, extremely abnormal and excessive inclement weather as indicated by the records of the local weather bureau for a five-year period preceding the date of the Contract, or by strikes, or other causes, which causes of delay mentioned in this Article, in the opinion of the City, are entirely beyond the expectation and control of the Contractor.

The Contractor shall, however, be entitled to an extension of time for such causes only for the number of days of delay which the City may determine to be due solely to such causes and only to the extent that such occurrences actually delay the completion of the project and then only if the Contractor shall have strictly complied with all of the requirements of Articles 4.01, 4.02, 4.03 and 4.04 hereof. It is hereby understood that the determination by the Engineer as to the order and sequence of the work shall not in itself constitute a basis for extension of time.

The determination made by the City on an application for an extension of time shall be binding and conclusive on the Contractor.

Delays caused by failure of the Contractor's materialmen, manufacturers, and dealers to furnish approved working drawings, materials, fixtures, equipment, appliances, or other fittings on time or failure of subcontractors to perform their work shall not constitute a basis of extension of time.

The Contractor agrees to make no claim for damages for delay in the performance of this Contract occasioned by any act or omission to act of the City or any of its representatives or because of any injunction which may be brought against the City or its representatives and agrees that any such claim shall be fully compensated for by an extension of time to complete performance of the work as provided herein.

ARTICLE 4.06 LIQUIDATED DAMAGES
It is mutually agreed between the parties that time is the essence of this Contract and that there will be on the part of the City considerable monetary damage in the event the Contractor should fail to complete the work within the time fixed for completion in the Contract or within the time to which such completion may have been extended.

The amount per day set forth in the Instructions to Bidders is hereby agreed upon as the liquidated damages for each and every calendar day that the time consumed in completing the work under this Contract exceeds the time allowed.

This amount shall, in no event, be considered as a penalty or otherwise than as the liquidated and adjusted damages to the City because of the delay and the Contractor and his Surety agree that the stated sum per day for each such day of delay shall be deducted and retained out of the monies which may become due hereunder and if not so deductible, the Contractor and his Surety shall be liable therefor.

ARTICLE 4.07 FINAL INSPECTION
When the work has been completed in accordance with the requirements of the Contract and final cleaning up performed, a date for final inspection of the work by the Engineer shall be set by the Contractor in a written request therefor, which date shall be not less than ten (10) days after the date of such request. The work will be deemed complete as of the date so set by the Contractor if, upon such inspection, the Engineer determines that no further work remains to be done at the site.

If such inspection reveals interms of work still to be performed, however, the Contractor shall promptly perform them and then request a reinspection. If, upon such inspection, the Engineer determines that the work is complete, the date of final completion shall be deemed to be the last day of such reinspection.

SECTION 5
SUBCONTRACTS AND ASSIGNMENTS

ARTICLE 5.01 LIMITATIONS AND CONSENT
The Contractor shall not assign, transfer, convey, sublet or otherwise dispose of this Contract or of his right, title, or interest therein, or his power to execute such Contract, or to assign any monies due or to become due thereunder to any other person, firm or corporation unless the previous written consent of the City shall first be obtained thereto and the giving of any such consent to a particular subcontract or assignment shall not dispense with the necessity of such consent to any further or other assignment.

Before making any subcontract, the Contractor must submit a

written statement to the Engineer, giving the name and address of the proposed contractor, the portion of the work and materials which he is to perform and furnish and any other information tending to prove that the proposed subcontractor has the necessary facilities, skill, integrity, past experience and financial resources to perform the work in accordance with the terms and conditions of this Contract.

If the City finds that the proposed subcontractor is qualified, the Contractor will be notified in writing. The City may revoke approval of any subcontractor when such subcontractor evidences an unwillingness or inability to perform his work in strict accordance with these Contract Documents. Notice of such revocation of approval will be given in writing to the Contractor.

The Contractor will promptly, upon request, file with the City a conformed copy of the subcontract. The Contractor shall cause appropriate provisions to be inserted in all subcontracts relative to the work to bind subcontractors to the Contractor by the terms of these Contract Documents, insofar as applicable to the work of subcontractors, and to give the Contractor the same power as regards terminating any subcontracts that the City may exercise over the Contractor under provisions of these Contract Documents.

The Contractor shall be required to perform with his own forces at least twenty-five (25) percent of the work, unless written consent to subcontract a greater percentage of the work is first obtained from the City.

ARTICLE 5.02 RESPONSIBILITY
The approval by the City of a subcontractor shall not relieve the Contractor of any of his responsibilities, duties, and liabilities hereunder. The Contractor shall be solely responsible to the City for the acts or defaults or omissions of his subcontractor and of such subcontractor's officers, agents, and employees, each of whom shall for all purposes be deemed to be the agent or employee of the Contractor. Nothing contained in the Contract Documents shall create any contractual relationship between any subcontractor and the City.

SECTION 6
SECURITY AND GUARANTY

ARTICLE 6.01 CONTRACT SECURITY
The Contractor shall execute and deliver to the City a Performance Bond on the form as provided herein, in an amount at least equal to one hundred (100) percent of the full Contract price, such Bond to be executed by a surety company acceptable to the City. The surety on such Performance Bond shall be a surety company duly authorized to do business in the State of Florida, and the Bond shall be issued or countersigned by a local resident producing agent of such surety company who is a resident of the State of Florida, regularly commissioned and licensed in said State, and satisfactory evidence of the authority of the person or persons executing such Bond shall be submitted with the Bond. The Performance Bond shall serve as security for the faithful performance of this Contract, including maintenance and guaranty provisions, and for the payment of all persons performing labor and furnishing materials in connection with the Contract. The premiums on the Performance Bond shall be paid by the Contractor.

If, at any time, the City shall become dissatisfied with any surety or sureties then upon the Performance Bond, or if for any other reason such bond shall cease to be adequate security for the City, the Contractor shall, within five days after notice so to do, substitute an acceptable Bond in such form and sum and signed by such other sureties as may be satisfactory to the City. The premiums on such Bond shall be paid by the Contractor. No further partial payments shall be deemed due or shall be made until the new sureties have qualified.

ARTICLE 6.02 CONTRACTORS INSURANCE
Insurance required shall be as indicated on Special Instructions pages beginning with "INS-1"

ARTICLE 6.03 AGAINST CLAIMS AND LIENS
The City may withhold from the Contractor as much as any approved payments to him as may, in the opinion of the City, be necessary to secure (a) just claims of any persons supplying labor or materials to the Contractor or any of his subcontractors for the work then due and unpaid; (b) loss due to defective work not remedied, or (c) liability, damage, or loss due to injury to persons or damages to the work or property of other contractors, subcontractors, or others, caused by the act or neglect of the Contractor or of any of his subcontractors. The City shall have the right, as agent for the Contractor, to apply any such amounts so withheld in such manner as the City may deem proper to satisfy such claims or to secure such protection. Such application of such money shall be deemed payments for the account of the Contractor.

ARTICLE 6.04 MAINTENANCE AND GUARANTY
The Contractor hereby guarantees all the work furnished under this Contract against any defects in workmanship and materials for a period of one year following the date of final acceptance of the work by the City. Under this guarantee, the Contractor hereby agrees to make good, without delay, at his own expense, any failure of any part of the work due to faulty materials or manufacture, construction, or installation, or the failure of any equipment to perform satisfactorily all the work put upon it within the limits of the Contract Documents, and further, shall make good any damage to any part of the work caused by such failure. It is hereby agreed that the Performance Bond shall fully cover all guarantees contained in this Article.
It is also agreed that all warranties, expressed or implied, inure to the benefit of the City and are enforceable by the City.

SECTION 7
CHANGES

ARTICLE 7.01 MINOR CHANGES
The City reserves the right to make such additions, deductions, or changes to this Contract from time to time as

it deems necessary and in a manner not materially affecting the substance thereof or materially changing the price to be paid in order to carry out and complete more fully and perfectly the work herein agreed to be done and performed. This Contract shall in no way be invalidated by any such additions, deductions, or changes, and no claim by the Contractor shall be made for any loss of anticipated profits thereby.

Construction conditions may require that minor changes be made in the location and installation of the work and equipment to be furnished and other work to be performed hereunder, and the Contractor when ordered by the Engineer, shall make such adjustments and changes in said locations and work as may be necessary, without additional cost to the City, provided such adjustments and changes do not alter the character, quantity of cost of the work as a whole, and provided further that Plans and Specifications showing such adjustments and changes are furnished to the Contractor by the City within a reasonable time before any work involving such adjustment and changes is begun. The Engineer shall be the sole judge of what constitutes a minor change for which no additional compensation shall be allowed.

ARTICLE 7.02 EXTRA WORK

The City may at any time by a written order and without notice to the sureties require the performance of such extra work as it may find necessary or desirable. An order for extra work shall be valid only if issued in writing and signed by the Mayor and the work so ordered must be performed by the Contractor.

The amount of compensation to be paid to the Contractor for any extra work as so ordered shall be determined as follows:

(a)By such applicable unit prices, if any, as are set forth in the Proposal; or

(b)If no such unit prices are set forth then by a lump sum or other unit prices mutually agreed upon by the City and the Contractor; or

(c)If no such unit prices are set forth in the Proposal and if the parties cannot agree upon a lump sum or other unit prices then by the actual net cost in money to the Contractor of the extra work performed, which cost shall be determined as follows:

(1) For all labor and foreman in direct charge of the authorized operations, the Contractor shall receive the current local rate of wages to be agreed upon, in writing, before starting such work for each hour that said labor and foremen are actually engaged thereon, to which shall be added an amount equal to 25 percent of the sum thereof which shall be considered and accepted as full compensation for general supervision, FICA taxes, contributions under the Florida Unemployment Compensation Act, insurance, bond, subcontractor's profit and overhead, the furnishing of small tools and miscellaneous equipment used, such as picks, shovels, hand pumps, and similar items.

(2) For all materials used, the Contractor shall receive the actual cost of such materials delivered at the site or previously approved delivery point as established by original receipted bills. No percentage shall be added to this cost.

(3) For special equipment and machinery such as power-driven pumps, concrete mixers, trucks, and tractors, or other equipment, required for the economical performance of the authorized work, the Contractor shall receive payment based on the average local area rental price for each item of equipment and the actual time of its use on the work. No percentage shall be added to this sum.

(4) Records of extra work done under this procedure shall be reviewed at the end of each day by the Contractor or his representative and the Engineer. Duplicate copies of accepted records shall be made and signed by both Contractor or his representative and the Engineer, and one copy retained by each.

Request for payment for approved and duly authorized extra work shall be submitted in the same form as Contract work or in the case of work performed under paragraph (c) (1) above upon a certified statement supported by receipted bills. Such statement shall be submitted for the current Contract payment for the month in which the work was done.

ARTICLE 7.03 DISPUTED WORK

If the Contractor is of the opinion that any work required, necessitated, or ordered violates the terms and provisions of this Contract, he must promptly notify the Engineer, in writing, of his contentions with respect thereto and request a final determination thereof. If the Engineer determines that the work in question is Contract work and not extra work or that the order complained of is proper, he will direct the Contractor to proceed and the Contractor shall promptly comply. In order, however, to reserve his right to claim compensation for such work or damages resulting from such compliance, the Contractor must, within five (5) days after receiving notice of the Engineer's determination and direction, notify the City in writing that the work is being performed or that the determination and direction is being complied with under protest. Failure of the Contractor to notify shall be deemed as a waiver of claim for extra compensation or damages therefor.

Before final acceptance by the City, all matters of dispute must be adjusted to the mutual satisfaction of the parties thereto. Final determinations and decisions, in case any questions shall arise, shall constitute a condition precedent to the right of the Contractor to receive the money therefor until the matter in question has been adjusted.

ARTICLE 7.04 OMITTED WORK

The City may at any time by a written order and without notice to the sureties require the omission of such Contract work as it may find necessary or desirable.

An order for omission of work shall be valid only if signed by the Mayor and the work so ordered must be omitted by the Contractor. The amount by which the Contract price shall be reduced shall be determined as follows:

(a) By such applicable unit prices, if any, as are set forth in the Contract; or

(b) By the appropriate lump sum price set forth in the Contract; or

(c) By the fair and reasonable estimated cost to the City

of such omitted work as determined by the Engineer and approved by the City.

SECTION 8
CONTRACTOR'S EMPLOYEES

ARTICLE 8.01 CHARACTER AND COMPETENCY

The Contractor and his subcontractors shall employ upon all parts of the work herein contracted for only competent, skillful, and trustworthy workers. Should the Engineer at any time give notice, in writing, to the Contractor or his duly authorized representative on the work that any employee in his opinion is incompetent, unfaithful, disorderly, careless, unobservant of instructions, or in any way a detriment to the satisfactory progress of the work, such employee shall immediately be dismissed and not again allowed upon the site.

ARTICLE 8.02 SUPERINTENDENCE

The Contractor shall give his personal supervision to the faithful prosecution of the work and in case of his absence shall have a competent, experienced, and reliable supervisor or superintendent, acceptable to the Engineer on the site who shall follow without delay all instructions of the Engineer in the prosecution and completion of the work and every part thereof, in full authority to supply workers, material, and equipment immediately. He shall keep on hand at all times copies of the Contract Documents.

ARTICLE 8.03 EMPLOYMENT OPPORTUNITIES

The Contractor shall, in the performance of the work required to be done under this Contract, employ all workers without discrimination regarding race, creed, color, sex or national origin and must not maintain or provide facilities that are segregated on the basis of race, color, creed or national origin.

ARTICLE 8.04 RATES OF WAGES

On federally assisted projects, the rates of wages to be paid under this Contract shall not be less than the rates of wages set forth in Section 12 of this Agreement.

On other projects, no wage rate determination is included. Florida's Prevailing Wage Law (Section 215.19, Florida Statutes) was repealed effective April 25, 1979.

ARTICLE 8.05 PAYROLL REPORTS

The Contractor and each subcontractor shall, if requested to do so, furnish to the Engineer a duly certified copy of his payroll and also any other information required by the Engineer to satisfy him that the provisions of the law as to the hours of employment and rate of wages are being observed.

Payrolls shall be prepared in accordance with instructions furnished by the City and on approved forms. The Contractor shall not carry on his payroll any persons not employed by him. Subcontractor's employees shall be carried only on the payrolls of the employing subcontractor.

SECTION 9
CONTRACTOR'S DEFAULT

ARTICLE 9.01 CITY'S RIGHT AND NOTICE

It is mutually agreed that: (a) if the Contractor fails to begin work when required to do so, or (b) if at any time during the progress of the work it shall appear to the Engineer that the Contractor is not prosecuting the work with reasonable speed, or is delaying the work unreasonably and unnecessarily, or (c) if the force of workmen or quality or quantity of material furnished are not sufficient to insure completion of the work within the specified time and in accordance with the Specifications hereto attached, or (d) if the Contractor shall fail to make prompt payments for materials or labor or to subcontractors for work performed under the Contract, or (e) if legal proceedings have been instituted by others than the City in such manner as to interfere with the progress of the work and may subject the City to peril of litigation or outside claims of (f) if the Contractor shall be adjudged a bankrupt or make an assignment for the benefit of creditors, or (g) if in any proceeding instituted by or against the Contractor an order shall be made or entered granting an extension of time of payment, composition, adjustment, modification, settlement or satisfaction of his debts or liabilities, or (h) if a receiver or trustee shall be appointed for the Contractor or the Contractor's property, or (i) if the Contract or any part thereof shall be sublet without the consent of the City being first obtained in writing, or (j) if this Contract or any right, monies, or claim thereunder shall be assigned by the Contractor, otherwise than as herein specified, or (k) if the Contractor shall fail in any manner of substance to observe the provisions of this Contract, or (l) if any of the work, machinery, or equipment shall be defective, and shall not be replaced as herein provided, or (m) if the work to be done under this Contract shall be abandoned, then such fact or conditions shall be certified by the Engineer and thereupon the City without prejudice to any other rights or remedies of the City, shall have the right to declare the Contractor in default and so notify the Contractor by a written notice, setting forth the ground or grounds upon which such default is declared and the Contractor must discontinue the work, either as a portion of the work or the whole thereof, as directed.

ARTICLE 9.02 CONTRACTOR'S DUTY UPON DEFAULT

Upon receipt of notice that his Contract is in default, the Contractor shall immediately discontinue all further operations on the work or such part thereof, and shall immediately quit the site or such part thereof, leaving untouched all plant, materials, equipment, tools, and supplies.

ARTICLE 9.03 COMPLETION OF DEFAULTED WORK

The City, after declaring the Contractor in default, may then have the work completed or the defective equipment or machinery replaced or anything else done to complete the work in strict accordance with the Contract Documents by such means and in such manner, by Contract with or without public letting, or otherwise, as it may deem advisable,

utilizing for such purpose without additional cost to the City such of the Contractor's plant, materials, equipment, tools, and supplies remaining on the site, and also such subcontractors as it may deem advisable.

The City shall reimburse all parties, including itself, for the expense of such completion, including liquidated damages, if any, and the cost of reletting. The City shall deduct this expense from monies due or to become due to the Contractor under this Contract, or any part thereof, and in case such expense is more than the sum remaining unpaid of the original contract price, the Contractor and his sureties shall pay the amount of such deficiency to the City.

ARTICLE 9.04 PARTIAL DEFAULT
In case the City shall declare the Contractor in default as to a part of the work only, the Contractor shall discontinue such part, shall continue performing the remainder of the work in strict conformity with the terms of the Contract, and shall in no way hinder or interfere with any other contractor or person whom the City may engage to complete the work as to which the Contractor was declared in default.

SECTION 10
PAYMENTS

ARTICLE 10.01 PRICES
For the Contractor's complete performance of the work, the City will pay and the Contractor agrees to accept, subject to the terms and conditions hereof, the lump sum prices or unit prices in the Contractor's Proposal and the award made therein, plus the amount required to be paid for any extra work ordered under Article 7.02 hereof, less credit for any work omitted pursuant to Article 7.04 hereof. Under unit price items, the number of units actually required to complete the work under the Contract may be more than stated in the Proposal. The Contractor agrees that no claim will be made for any damages or for loss of profits because of a difference between the quantities of the various classes of work assumed and stated in the Proposal Form as a basis for comparing Proposals and the quantities of work actually performed.

The sum as awarded for any lump sum Contract or lump sum Contract Item shall represent payment in full for all of the various classes of work, including materials, equipment, and labor necessary or required to complete, in conformity with the Contract Document, the entire work shown, indicated or specified under the lump sum Contract or lump sum Contract Item.

The amount as awarded as a unit price for any unit price Contact Item shall represent payment in full for all the materials, equipment, and labor necessary to complete, in conformity with the Contract Documents, each unit of work shown, specified, or required under the said unit price Contract Item.

No payment other than the amount as awarded will be made for any class of work included in a lump sum Contract Item or a unit price Contract Item, unless specific provision is made therefor in the Contract Documents.

ARTICLE 10.02 SUBMISSION OF BID BREAKDOWN
Within fifteen (15) days after the execution of this Contract, the Contractor must submit to the Engineer in duplicate an acceptable breakdown of the lump sums and unit prices bid for items of the Contract, showing the various operations to be performed under the Contract, as described in the progress schedule required under Article 4.02 hereof, and the value of each of such operations, the total of such items to equal the total price bid. The Contractor shall also submit such other information relating to the bid prices as may be required and shall revise the bid breakdown as directed. Thereafter, the breakdown may be used for checking the Contractor's applications for partial payments hereunder but shall not be binding upon the City or the Engineer for any purpose whatsoever.

ARTICLE 10.03 REPORTS, RECORDS AND DATA
The Contractor shall furnish to the Engineer such schedules of quantities and costs, progress schedules, reports, invoices, delivery tickets, estimates, records, and other data as the Engineer may request concerning work performed or to be performed and the materials furnished under the Contract.

ARTICLE 10.04 PAYMENTS BY CONTRACTOR
The Contractor shall pay (a) for all transportation and utility services not later than the 20th day of the calendar month following that in which such services are rendered, (b) for all materials, tools, and equipment delivered at the site of the project, and the balance of the cost thereof not later than the 30th day following the completion of that part of the work in or on which such materials, tools, and equipment are incorporated or used, and (c) to each of his subcontractors, not later than the 5th day following each payment to the Contractor, the respective amounts allowed the Contractor on account of the work performed by his subcontractors, to the extent of each subcontractor's interest therein; and proof of such payments or releases therefor shall be submitted to the Engineer upon request.

ARTICLE 10.05 PARTIAL PAYMENTS
On or about the first of each month, the Contractor shall make and certify an estimate, on forms prescribed by the City, of the amount and fair value of the work done, and may apply for partial payment therefor. The Contractor shall revise the estimate as the Engineer may direct. When satisfactory progress has been made, and shows that the value of the work completed since the last payment exceeds one percent (1%) of the total Contract price in amount, the Engineer will issue a certificate that such work has been completed and the value thereof. The City will then issue a voucher to the Contractor in accordance with the following schedule:

FOR CONTRACT AMOUNTS UNDER $250,000
(A)In the amount of ninety percent (90%) of the value of the work completed as certified until construction is one hundred percent (100%) complete (operational or beneficial occupancy), the withheld amount may be reduced below ten percent (10%), at the Engineer's option, to only that amount necessary to assure completion.

FOR CONTRACT AMOUNTS OVER $250,000

(A)In the amount of ninety percent (90%) of the value of the work completed as certified until construction is fifty percent (50%) complete.

(B)When the dollar value, as determined by the Engineer, of satisfactorily completed work in place is greater than fifty percent (50%) of the original contract price, vouchers for partial payment will be issued by the City to the Contractor in the amount of one hundred percent (100%) of the value of the work, above 50%, completed as certified for that payment period.

(C)If the Contractor has performed satisfactorily and the work is substantially complete (operational or beneficial occupancy) the withheld amount may be reduced, at the Engineer's option, to only that amount necessary to assure completion.

In addition to the Conditions set forth in (A), (B), and (C) above, payments will always be less any sums that may be retained or deducted by the City under the terms of any of the contract documents and less any sums that may be retained to cover monetary guarantees for equipment, materials or progress performance.

Payment on estimates made on or about the first of the month may be expected on or about the 20th of the month.

Unless specified otherwise in the Contract Items, the delivered cost of equipment and nonperishable materials suitably stored at the site of the work and tested for adequacy may be included in the Contractor's application for partial payment provided, however, that the Contractor shall furnish evidence satisfactory to the City that the Contractor is the unconditional owner and in possession of such materials or equipment. The amount to be paid will be 90 percent of the invoice cost to the Contractor which cost shall be supported by receipted bills within 30 days of the date of payment by the City to the Contractor. Such payment shall not relieve the Contractor from full responsibility for completion of the work and for protection of such materials and equipment until incorporated in the work in a permanent manner as required by the Contract Documents.

Before any payment will be made under this Contract, the Contractor and every subcontractor, if required, shall deliver to the Engineer a written, verified statement, in satisfactory form, showing in detail all amounts then due and unpaid by such Contractor or subcontractor to all laborers, workmen, and mechanics, employed by him under the Contract for the performance of the work at the site thereof, for daily or weekly wages, or to other persons for materials, equipment, or supplies delivered at the site of the work during the period covered by the payment under consideration.

ARTICLE 10.06 FINAL PAYMENT

Under determination of satisfactory completion of the work under this Contract as provided in Article 4.07 hereof, the Engineer will prepare the final estimate showing the value of the completed work. This estimate will be prepared within 30 days after the date of completion or as soon thereafter as the necessary measurements and computations can be made. All prior certificates and estimates, being approximate only, are subject to correction in the final estimate and payment.

When the final estimate has been prepared and certified by Engineer, he will submit to the Mayor and City Council the final certificate stating that the work has been completed and the amount based on the final estimate remaining due to the Contractor. The City will then accept the work as fully completed and will, not later than 30 days after the final acceptance, as defined in Article 1.02, of the work done under this Contract, pay the Contractor the entire amount so found due thereunder after deduction of all previous payments and all percentages and amounts to be kept and retained under provisions of this Contract; provided, however, and it is understood and agreed that, as a precedent to receiving final payment, the Contractor shall submit to the City a sworn affidavit that all bills for labor, service, materials, and subcontractors have been paid and that there are no suits pending in connection with this work. The City, at its option, may permit the Contractor to execute a separate surety bond in a form satisfactory to the City. The surety bond shall be in the full amount of the suit or suits.

Neither the final payment nor any part of the retained percentage shall be paid until the Contractor, if required, shall furnish the City with a complete release from any should remain unsatisfied after all payments are made, the Contractor shall refund to the City all monies which the City may be compelled to pay in discharging such claim, including incidental costs and attorney's fees.

ARTICLE 10.07 ACCEPTANCE OF FINAL PAYMENT

The acceptance by the Contractor, or by anyone claiming by or through him, of the final payment shall operate as and shall be a release to the City and every officer and agent thereof from any and all claims and liability to the Contractor for anything done or furnished in connection with the work or project and for any act or neglect of the Contractor or of any others relating to or affecting the work. No payment, however, final or otherwise, shall operate to release the Contractor or his sureties from any obligations under this Contract or the Performance Bond.

SECTION 11
MISCELLANEOUS PROVISIONS

ARTICLE 11.01 CONTRACTOR'S WARRANTIES

In consideration of, and to induce the award of this contract to him, the Contractor represents and warrants:

(a)That he is not in arrears to the City upon debt or contract, and he is not a defaulter, as surety, contractor, or otherwise.

(b)That he is financially solvent and sufficiently experienced and competent to perform the work.

(c)That the work can be performed as called for by the Contract Documents.

(d)That the facts stated in his proposal and the information given by him are true and correct in all respects.

(e)That he is fully informed regarding all the conditions affecting the work to be done and labor and materials to be

furnished for the completion of this Contract, and that his information was secured by personal investigation and research.

ARTICLE 11.02 PATENTED DEVICES, MATERIAL AND PROCESSES

It is mutually understood and agreed that Contract prices include all royalties and costs arising from patents, trademarks, and copyrights in any way involved in the work. Whenever the Contractor is required or desires to use any design, device, material, or process covered by letters of patent or copyright, the Contractor shall indemnify and save harmless the City, its officers, agents and employees from any and all claims for infringement by reason of the use of any such patented design, device, tool, material, equipment, or process, to be performed under the Contract, and shall indemnify the said City, its officers, agents, and employees for any costs, expenses, and damages which may be incurred by reason of such infringement at any time during the prosecution or after completion of the work.

ARTICLE 11.03 SUITS AT LAW

In case any action at law or suit in equity may or shall be brought against the City or any of its officers, agents, or employees for or on account of the failure, omission, or neglect of the Contractor or his subcontractors, employees, or agents, to do or perform any of the covenants, acts, matters, or things by this Contract undertaken to be done or performed by the Contractor of his subcontractors, employees, or agents, or from any injuries done to property or persons and caused by the negligence or alleged negligence of the Contractor of his subcontractors, employees, or agents, or in any other manner arising out of the performance of this Contract, then the Contractor shall immediately assume and take charge of the defense of such actions or suits in like manner and to all intents and purposes as if said actions or suits have been brought directly against the Contractor, and the Contractor shall also indemnity and save harmless the City, its officers, agents, and employees from any and all loss, cost or damage whatever arising out of such actions or suits, in like manner and to all intents and purposes as if said actions or suits have been brought directly against the Contractor.

The Contractor shall and does hereby assume all liability for and agrees to indemnify the City or its Engineer against any or all loss, costs, damages, and liability for any or by reason of any lien, claims or demands, either for materials purchased or for work performed by laborers, mechanics, and others and from any damages, costs, actions, or causes of action and judgement arising from injuries sustained by mechanics, laborers, or other persons by reason of accidents or otherwise, whether caused by the carelessness or inefficiency or neglect of said Contractor, his subcontractors, agents, employees, workmen or otherwise.

ARTICLE 11.04 CLAIMS FOR DAMAGES

If the Contractor shall claim compensation for any damage sustained, other than for extra or disputed work covered by Article 7.02 and 7.03 hereof, by reason of any act or omission of the City, its agents, or any persons, he shall, within five days after sustaining such damage, make and deliver to the Engineer a written statement of the nature of the damage sustained and of the basis of the claim against the City. On or before the 15th of the month succeeding that in which any damage shall have been sustained, the Contractor shall make and deliver to the Engineer an itemized statement of the details and amounts of such damage, duly verified by the Contractor. Unless such statements shall be made delivered within the times aforesaid, it is stipulated that and all claims for such compensation shall be forfeited and invalidated, and the Contractor shall not be entitled to payment on account of such claims.

ARTICLE 11.05 NO CLAIMS AGAINST INDIVIDUALS

No claim whatsoever shall be made by the Contractor against any officer, agent, employee of the City for, or on account of, anything done or omitted to be done in connection with this Contract.

ARTICLE 11.06 LIABILITY UNAFFECTED

Nothing herein contained shall in any manner create any liability against the City on behalf of any claim for labor, services, or materials, or of subcontractors, and nothing herein contained shall affect the liability of the Contractor or his sureties to the City or to any workmen or materialsmen upon bond given in connection with this Contract.

ARTICLE 11.07 INDEMNIFICATION PROVISIONS

Whenever there appears in this Agreement, or in the other Contact Documents made a part hereof, an indemnification provision within the purview of Chapter 725.06, Laws of Florida, the monetary limitation on the extent of the indemnification under each such provision shall be One Million Dollars or a sum equal to the total Contract price, whichever shall be the greater.

ARTICLE 11.08 UNLAWFUL PROVISIONS DEEMED STRICKEN

If this contract contains any unlawful provisions not an essential part of the Contract and which shall not appear to have a controlling or material inducement to the making thereof, such provisions shall be deemed of no effect and shall, upon notice by either party, be deemed stricken from the Contract without affecting the binding force of the remainder.

ARTICLE 11.09 LEGAL PROVISIONS DEEMED INCLUDED

Each and every provision of any law and clause required by law to be inserted in this Contract shall be deemed to be inserted herein, and the Contract shall be read and enforced as though it were included herein and if, through mistake or otherwise, any such provision is not inserted or is not correctly inserted, then upon application of either party the Contract shall forthwith be physically amended to make such insertion.

ARTICLE 11.10 DEATH OR INCOMPETENCY OF CONTRACTOR

In the event of death or legal incompetency of a Contractor who shall be an individual or surviving member of a contracting firm, such death or adjudication of incompetency

shall not terminate the Contract, but shall act as default hereunder to the effect provided in Article 9.01 hereof and the estate of the Contractor and his surety shall remain liable hereunder to the same extent as though the Contractor had lived. Notice of default, as provided in Article 9.01 hereof, shall not be required to be given in the event of such death or adjudication of incompetency.

ARTICLE 11.11 NUMBER AND GENDER OF WORDS
Whenever the context so admits or requires, all references herein in one number shall be deemed extended to and including the other number, whether singular or plural, and the use of any gender shall be applicable to all genders.

ARTICLE 11.12 ACCESS TO RECORDS
Representatives of Federal Agencies, if applicable, and the State of Florida shall have access to the work whenever it is in preparation of progress. On federally assisted projects the Federal Agency, the Comptroller General of the United States, or any authorized representative shall have access to any books, documents, papers, and records of the Contractor which are pertinent to the project for the purpose of making audit, examination, excerpts, and transcription thereof.

SECTION 12
LABOR STANDARDS

ARTICLE 12.01 LABOR STANDARDS
The Contractor shall comply with all of the regulations set forth in "Labor Standards Provisions for Federally Assisted Construction Contracts", which may be attached, and any applicable Florida Statutes.

ARTICLE 12.02 NOTICE TO LABOR UNIONS
If required, the Contractor shall provide Labor Unions and other organizations of workers, and shall post, in a conspicuous place available to employees or applicants for employment, a completed copy of the form entitled "Notice to Labor Unions or Other Organizations of Workers" attached to and made a part of this Agreement.

ARTICLE 12.03 SAFETY AND HEALTH REGULATIONS
The Contractor shall comply with the Department of Labor Safety and Health Regulations for construction promulgated under the Occupational Safety and Health Act of 1970 (PL 91- 596) and under Section 107 of the Contract Work Hours and Safety Standards Act (PL 91-54). Nothing in these Acts shall be construed to supersede or in any manner affect any worker's compensation law or statutory rights, duties, or liabilities of employers and employees under any law with respect to injuries, diseases, or death of employees arising out of, or in the course of, employment.

ARTICLE 12.04 EEO AFFIRMATIVE ACTION REQUIREMENTS
The Contractor understands and agrees to be bound by the equal opportunity requirements of Federal regulations which shall be applicable throughout the performance of work under this Contract. The Contractor also agrees to similarly bind contractually each subcontractor. In policies, the Contractor agrees to engage in Affirmative Action directed at promoting and ensuring equal employment opportunity in the work force used under the Contract (and the Contractor agrees to require contractually the same effort of all subcontractors whose subcontractors exceed $100,000). The Contractor understands and agrees that "Affirmative Action" as used herein shall constitute a good faith effort to achieve and maintain minority employment in each trade in the on-site work force used on the Contract.

ARTICLE 12.05 PREVAILING RATES OF WAGES
Florida's prevailing wage law was repealed effective April 25, 1979.

For Federally assisted projects, appropriate prevailing wage rate determinations are indicated on pages beginning with WR-1.

* * * * * * *

IN WITNESS THEREOF, the parties have hereunto set their hands and seals, and such of them as are corporation have caused these present to be signed by their duly authorized officers.

CITY OF TAMPA, FLORIDA

_____
Bob Buckhorn, Mayor
(SEAL)

ATTEST:

_____
City Clerk

Approved as to Form:
The execution of this document was authorized
by Resolution No. _____

_____
Rachel S. Peterkin, Assistant City Attorney

Contractor

By:_____
(SEAL)

Title:

ATTEST:

_____
Witness

STATE OF)
) SS:
COUNTY OF)

For a Corporation:

STATE OF _____
COUNTY OF _____

The foregoing instrument was acknowledged before me this ___ of _____, 20___ by _____ of _____, a _____ corporation, on behalf of the corporation. He/she is ___ personally known or has ___ produced _____ as identification.

_____
Notary

My Commission Expires:

_____

For an Individual:

STATE OF _____
COUNTY OF _____

The foregoing instrument was acknowledged before me this ___ of _____, 20___ by _____ who is ___ personally known to me or has ___ produced _____ as identification.

_____
Notary

My Commission Expires:

_____

For a Firm:

STATE OF _____
COUNTY OF _____

The foregoing instrument was acknowledged before me this ___ of _____, 20___ by _____ who signed on behalf of the said firm. He/she is ___ personally known or has ___ produced _____ as identification.

_____
Notary

My Commission Expires:

_____

_____

PUBLIC CONSTRUCTION BOND

Bond No. (enter bond number)_____

Name of Contractor:_____

Principal Business Address of Contractor:_____

_____

Telephone Number of Contractor:_____

Name of Surety (if more than one list each):_____

_____

Principal Business Address of Surety:_____

_____

Telephone Number of Surety:_____

Owner is The City of Tampa, Florida

Principal Business Address of Owner: 306 E Jackson St, Tampa, FL 33602

Contract Administration Department (280A4N)

Telephone Number of Owner: 813/274-8456

Contract Number Assigned by City to contract which is the subject of this bond:_____

Legal Description or Address of Property Improved or Contract Number is:_____

_____

_____

_____

General Description of Work and Services:_____

_____

_____

_____

Revised 2016-08-29

KNOW ALL MEN BY THESE PRESENTS That we, _____

_____
(Name of Contractor)

as Principal, hereinafter called CONTRACTOR, of the State of _____, and

_____(Name of Surety)
a corporation organized and existing under and by virtue of the laws of the State of _____, and regularly authorized to do business in the State of Florida, as SURETY, are held and firmly bound unto the City of Tampa, a municipal corporation organized and existing under the laws of the State of Florida, hereinafter called Owner, in the penal sum of _____Dollars and _____Cents ($_____), lawful money of the United States of America, for the payment whereof well and truly to be made, we bind ourselves, our heirs, executors, and administrators, successors and assigns, jointly and severally, firmly by these presents.

THE CONDITION OF THIS BOND is that if Principal:

1. Performs the contract dated _____, _____, 20___, between Principal and Owner for construction of _____, the contract being made a part of this bond by reference, in the time and in the manner prescribed in the contract; and

2. Promptly makes payments to all claimants, as defined in Section 255.05(1) (Section 713.01), Florida Statutes, supplying Principal with labor, materials, or supplies, used directly or indirectly by Principal in the prosecution of the work provided for in the contract; and

3. Pays Owner all losses, damages, expenses, costs, and attorney's fees, including appellate proceedings, that Owner sustains because of a default by Principal under the contract; and

4. Performs the guarantee of all work and materials furnished under the contract for the time specified in the contract, then this bond is void; otherwise it remains in full force.

5. Contractor and Surety acknowledge that the Work for which this bond has been issued may be one of several such contract documents for a group of projects. This bond does not secure covenants to pay for or to perform design services survey or program management services. The Owner/Obligee is expected to reasonably account for damages that are caused to Owner with respect to Principal's (Contractor's) default in performance of the scope of the Work incorporated by reference into the bond, and notwithstanding any contractual or common law remedy permitted to Owner as against Contractor, the obligation of Surety for any damages under this bond shall be determined by the cost of completion of the Work less the contract balance unpaid upon default of Contractor for the Work plus liquidated damages at the rate of $500.00 per day for delays by the Contractor and/or Surety in reaching substantial completion.

6. The notice requirements for claimants and conditions for entitlement to payment set forth in Section 255.05, Fla. Stat. and the limitations period to actions upon Section 255.05, Fla. Stat. bonds apply to claimants seeking payment from surety under this bond. Any action instituted by a claimant under this bond for payment must be in accordance with the notice and time limitation provisions in Section 255.05, Florida Statutes.

7. The Surety, for value received, hereby stipulates and agrees that no changes, extensions of time, alterations or additions to the terms of the contract documents or other Work to be performed hereunder, or the specifications referred to therein shall in any way affect its obligations under this bond, and it does hereby waive notice of any such changes, extensions of time, alterations or additions to the terms of the Contract or to Work or to the specifications.

8. The above SURETY states that it has read all of the Contract Documents made by the CONTRACTOR with the CITY, hereto attached, and the terms and conditions of the contract and work, and is familiar therewith and in particular those portions of the Agreement concerning the guaranty of such CONTRACTOR for a period of one year following the date of the final acceptance of the completed work under the Contract by the CITY, all of which this BOND includes.

DATED ON _____, 20___

_____
(Name of Principal)

_____
(Principal Business Address)

By _____

Title _____

_____
Telephone Number of Principal

_____
(Name of Surety)

_____
(Surety Address)

By _____
(As Attorney in Fact)*

_____
Telephone Number of Surety

Approved as to legal sufficiency:

By _____
Assistant City Attorney

Countersignature:

_____
(Name of Local Agency)

_____
(Address of Resident Agent)

By _____

Title _____

_____
Telephone Number of Local Agency

*(As Attorney in Fact) attach Power of Attorney and Current Certificate with Original Signature

SPECIFICATIONS
GENERAL PROVISIONS

SECTION 1
SCOPE AND INTENT

G-1.01 DESCRIPTION
The work to be done consists of the furnishing of all labor, materials and equipment, and the performance of all work included in this Contract.

G-1.02 WORK INCLUDED
The Contractor shall furnish all labor, superintendence, materials, plant, power, light, heat, fuel, water, tools, appliances, equipment, supplies, and other means of construction necessary or proper for performing and completing the work. He shall obtain and pay for all required permits. He shall perform and complete the work in the manner best calculated to promote rapid construction consistent with safety of life and property and to the satisfaction of the Engineer, and in strict accordance with the Contract Documents. The Contractor shall clean up the work and maintain it during and after construction, until accepted, and shall do all work and pay all costs incidental thereto. He shall repair or restore all structures and property that may be damaged or disturbed during performance of the work.

The cost of incidental work described in these General Provisions, for which there are no specific Contract Items, shall be considered as part of the overhead cost of doing the work and shall be included in the prices for the various Contract Items. No additional payment will be made therefor.

The Contractor shall provide and maintain such modern plant, tools, and equipment as may be necessary, in the opinion of the Engineer, to perform in a satisfactory and acceptable manner all the work required by this Contract. Only equipment of established reputation and proven efficiency shall be used. The Contractor shall be solely responsible for the adequacy of his plant and equipment, prior approval of the Engineer notwithstanding.

G-1.03 PUBLIC UTILITY INSTALLATIONS AND STRUCTURES
Public utility installations and structures shall be understood to include all poles, tracks, pipes, wires, conduits, house service connections, vaults, manholes, and all other appurtenances and facilities pertaining thereto whether owned or controlled by the City, other governmental bodies or privately owned by individuals, firms, or corporations, and used to serve the public with transportation, traffic control, gas, electricity, telephone, sewerage, drainage, water or other public or private property which may be affected by the work.

The Contract Documents contain data relative to existing public utility installations and structures above and below the ground surface. These data are not guaranteed as to their completeness or accuracy and it is the responsibility of the Contractor to make his own investigations to inform himself fully of the character, condition and extent of all such installations and structures as may be encountered and as may affect the construction operations.

The Contractor shall protect all public utility installations and structures from damage during the work. Access across any buried public utility installation or structure shall be made only in such locations and by means approved by the Engineer. The Contractor shall so arrange his operations as to avoid any damage to these facilities. All required protective devices and construction shall be provided by the Contractor at his expense. All existing public utilities damaged by the Contractor which are shown on the Plans or have been located in the field by the utility shall be repaired by the Contractor, at his expense, as directed by the Engineer. No separate payment shall be made for such protection or repairs to public utility installations or structures.

Public utility installations or structures owned or controlled by the City or other governmental body which are shown on the Plans to be removed, relocated, replaced or rebuilt by the Contractor shall be considered as a part of the general cost of doing the work and shall be included in the prices bid for the various Contract Items. No separate payment shall be made therefor.

Where public utility installations or structures owned or controlled by the City or other governmental body are encountered during the course of the work, and are not indicated on the Plans or in the Specifications, and when, in the opinion of the Engineer, removal, relocation, replacement or rebuilding is necessary to complete the work under this Contract, such work shall be accomplished by the utility having jurisdiction or such work may be ordered, in writing by the Engineer, for the Contractor to accomplish. If such work is accomplished by the utility having jurisdiction it will be carried out expeditiously and the Contractor shall give full cooperation to permit the utility to complete the removal, relocation, replacement or rebuilding as required. If such work is accomplished by the Contractor, it will be paid for as extra work as provided for in Article 7.02 of the Agreement.

The Contractor shall, at all times in performance of the work, employ approved methods and exercise reasonable care and skill so as to avoid unnecessary delay, injury, damage or destruction of public utility installations and structures; and shall, at all times in the performance of the work, avoid unnecessary interference with, or interruption of, public utility services, and shall cooperate fully with the owners thereof to that end.

All City and other governmental utility departments and other owners of public utilities, which may be affected by the work, will be informed in writing by the Engineer within two weeks after the execution of the Contract or Contracts covering the work. Such notice will set out, in general, and direct attention to, the responsibilities of the City and other governmental

utility departments and other owners of public utilities for such installations and structures as may be affected by the work and will be accompanied by one set of Plans and Specifications covering the work under such Contract or Contracts.

In addition to the general notice given by the Engineer, the Contractor shall give written notice to all City and other governmental utility departments and other owners of public utilities of the location of his proposed construction operations, at least forty-eight (48) hours in advance of breaking ground in any area or on any unit of the work. This can be accomplished by making the appropriate contact with the "Underground Utility Notification Center for Excavators (Call Candy)".

The maintenance, repair, removal, relocation, or rebuilding of public utility installations and structures, when accomplished by the Contractor as herein provided, shall be done by methods approved by the Engineer.

SECTION 2
PLANS AND SPECIFICATIONS

G-2.01 PLANS
The Plans referred to in the Contract Documents bear the general project name and number as shown in the Notice To Bidders.

When obtaining data and information from the Plans, figures shall be used in preference to scaled dimensions, and large scale drawings in preference to small scale drawings.

G-2.02 COPIES FURNISHED TO CONTRACTOR
After the Contract has been executed, the Contractor will be furnished with five sets of paper prints, the same size as the original drawings, of each sheet of the Plans and five copies of the Specifications. Additional copies of the Plans and Specifications, when requested, may be furnished to the Contractor at cost of reproduction.

The Contractor shall furnish each of the subcontractors, manufacturers, and material suppliers such copies of the Contract Documents as may be required for his work.

G-2.03 SUPPLEMENTARY DRAWINGS
When, in the opinion of the Engineer, it becomes necessary to explain more fully the work to be done or to illustrate the work further or to show any changes which may be required, drawings known as Supplementary Drawings, with specifications pertaining thereto, will be prepared by the Engineer and five paper prints thereof will be given to the Contractor.

The Supplementary Drawings shall be binding upon the Contractor with the same force as the Plans. Where such Supplementary Drawings require either less or more than the estimated quantities of work, credit to the City or compensation therefor to the Contractor shall be subject to the terms of the Agreement.

G-2.04 CONTRACTOR TO CHECK PLANS AND DATA
The Contractor shall verify all dimensions, quantities, and details shown on the Plans, Supplementary Drawings, Schedules, Specifications, or other data received from the Engineer, and shall notify him of all errors, omissions, conflicts, and discrepancies found therein. Failure to discover or correct errors, conflicts or discrepancies shall not relieve the Contractor of full responsibility for unsatisfactory work, faulty construction or improper operation resulting therefrom nor from rectifying such conditions at his own expense. He will not be allowed to take advantage of any errors or omissions as full instructions will be furnished by the Engineer, should such errors or omissions be discovered. All schedules are given for the convenience of the Engineer and the Contractor and are not guaranteed to be complete. The Contractor shall assume all responsibility for the making of estimates of the size, kind, and quality of materials and equipment included in work to be done under the Contract.

G-2.05 SPECIFICATIONS
The specifications consist of four parts, the General Provisions, the Technical Specifications, the Special Provisions and the Contract Items. The General Provisions and Technical Specifications contain general requirements which govern the work. The Special Provisions and the Contract Items modify and supplement these by detailed requirements for the work and shall always govern, whenever there appears to be conflict.

G-2.06 INTENT
All work called for in the Specifications applicable to this Contract, but not shown on the Plans in their present form, or vice versa, shall be of like effect as if shown or mentioned in both. Work not specified in either the Plans or in the Specifications, but involved in carrying out their intent or in the complete and proper execution of the work, is required and shall be performed by the Contractor as though it were specifically delineated or described.

The apparent silence of the Specifications as to any detail, or the apparent omission from them of a detailed description concerning any work to be done and materials to be furnished, shall be regarded as meaning that only the best general practice is to prevail and that only material and workmanship of the best quality is to be used, and interpretation of these Specifications shall be made upon that basis.

SECTION 3
WORKING DRAWINGS

G-3.01 SCOPE
The Contractor shall promptly prepare and submit layout, detail and shop drawings to insure proper construction, assembly, and installation of the work using those materials and methods as hereafter specified under the Technical Specifications, Special Provisions and Contract Items.

These drawings shall accurately and distinctly present the following:

a. All working and erection dimensions.
b. Arrangements and sectional views.
c. Necessary details, including complete information for making connections between work under this Contract and work under other Contracts.
d. Kinds of materials and finishes.
e. Parts listed and description thereof.

Drawings for mechanical equipment shall present, where applicable, such data as dimensions, weight and performance characteristics. These data shall show conformance with the performance characteristics and other criteria incorporated in the Plans and Specifications.

Each drawing shall be dated and shall contain the name of the project, Division number and description, the technical specifications section number, names of equipment or materials and the location at which the equipment or materials are to be installed. Location shall mean both physical location and location relative to other connected or attached material. The Engineer will return unchecked any submittal which does not contain complete data on the work and full information on related matters.

Stock or standard drawings will not be accepted for review unless full identification and supplementary information is shown thereon in ink or typewritten form.

The Contractor shall review all working drawing submittals before transmitting them to the Engineer to determine that they comply with requirements of the Specifications. Drawings which are incomplete or are not in compliance with the Contract Documents shall not be submitted for processing by the Engineer. The Contractor shall place his stamp of approval on all working drawings submitted to the Engineer to indicate compliance with the above.

G-3.02 APPROVAL
If the working drawings show departures from the Contract requirements, the Contractor shall make specific mention thereof in his letter of submittal; otherwise approval of such submittals shall not constitute approval of the departure. Approval of the drawings shall constitute approval of the subject matter thereof only and not of any structure, material, equipment, or apparatus shown or indicated.

The approval of drawings will be general and shall not relieve the Contractor of responsibility for the accuracy of such drawings, nor for the proper fitting and construction of the work, nor for the furnishing of materials or work required by the Contract and not indicated on the drawings. No work called for by working drawings shall be done until such drawings have been approved by the Engineer.

The procedure in seeking approval of the working drawings shall be as follows:

1.The Contractor shall submit four complete sets of drawings and other descriptive data together with one copy of a letter of transmittal to the Engineer for approval. The letter of transmittal shall contain the name of the project, contract number, technical specifications section number, the name of the Contractor, a list of drawings with numbers and titles, and any other pertinent information.

2.Drawings or descriptive data will be stamped "Approved", "Approved Subject to Corrections Marked", or "Examined and Returned for Correction" and one copy with a letter of transmittal will be returned to the Contractor.

3.If a drawing or other data is stamped "Approved", the Contractor shall insert the date of approval on five additional copies of the document and transmit the five copies to the Engineer together with one copy of a letter of transmittal containing substantially the same information as described in Instruction 1. above.

4.If a drawing or other data is stamped "Approved Subject to Corrections Marked", the Contractor shall make the corrections indicated and proceed as in Instruction 3., above.

5.If a drawing or data is stamped "Examined and Returned for Correction", the Contractor shall make the necessary corrections and resubmit the documents as set forth in Instruction 1., above. The letter of transmittal shall indicate that this is a resubmittal.

The Contractor shall revise and resubmit the working drawings as required by the Engineer, until approval thereof is obtained.

SECTION 4
MATERIALS AND EQUIPMENT

G-4.01 GENERAL REQUIREMENTS
All materials, appliances, and types or methods of construction shall be in accordance with the Specifications and shall, in no event, be less than that necessary to conform to the requirements of any applicable laws, ordinances, and codes.

All materials and equipment shall be new, unused, and correctly designed. They shall be of standard first grade quality, produced by expert personnel, and intended for the use for which they are offered. Materials or equipment which, in the opinion of the Engineer, are inferior or of a lower grade than indicated, specified, or required will not be accepted.

The quality of Workmanship and Materials entering into the work under this Contract shall conform to the requirements of the pertinent sections, clauses, paragraphs, and sentences, both directly and indirectly applicable thereto, of that part of the Technical Specifications, whether or not direct reference to such occurs in the Contract Items.

Equipment and appurtenances shall be designed in conformity with ANSI, ASME, IEEE, NEMA and other

generally accepted standards and shall be of rugged construction and of sufficient strength to withstand all stresses which may occur during fabrication, testing, transportation, installation, and all conditions of operation. All bearings and moving parts shall be adequately protected against wear by bushings or other approved means and shall be fully lubricated by readily accessible devices. Details shall be designed for appearance as well as utility. Protruding members, joints, corners, gear covers, and the like, shall be finished in appearance. All exposed welds shall be ground smooth and the corners of structural shapes shall be mitered.

Equipment shall be of the approximate dimensions as indicated on the Plans or as specified, shall fit the spaces shown on the Plans with adequate clearances, and shall be capable of being handled through openings provided in the structure for this purpose. The equipment shall be of such design that piping and electrical connections, ductwork, and auxiliary equipment can be assembled and installed without causing major revisions to the location or arrangement of any of the facilities.

Machinery parts shall conform exactly to the dimensions shown on the working drawings. There shall be no more fitting or adjusting in setting up a machine than is necessary in assembling high grade apparatus of standard design. The equivalent parts of identical machines shall be made interchangeable. All grease lubricating fittings on equipment shall be of a uniform type. All machinery and equipment shall be safeguarded in accordance with the safety codes of the ANSI and applicable state and local codes.

G-4.02 MANUFACTURER

The names of proposed manufacturers, suppliers, material, and dealers who are to furnish materials, fixtures, equipment, appliances or other fittings shall be submitted to the Engineer for approval, as early as possible, to afford proper investigation and checking. Such approval must be obtained before shop drawings will be checked. No manufacturer will be approved for any materials to be furnished under this Contract unless he shall be of good reputation and have a plant of ample capacity. He shall, upon the request of the Engineer, be required to submit evidence that he has manufactured a similar product to the one specified and that it has been previously used for a like purpose for a sufficient length of time to demonstrate its satisfactory performance.

All transactions with the manufacturers or subcontractors shall be through the Contractor, unless the Contractor shall request, in writing to the Engineer, that the manufacturer or subcontractor deal directly with the Engineer. Any such transactions shall not in any way release the Contractor from his full responsibility under this Contract.

Any two or more pieces of material or equipment of the same kind, type or classification, and being used for identical types of service, shall be made by the same manufacturer.

G-4.03 REFERENCE TO STANDARDS

Whenever reference is made to the furnishing of materials or testing thereof to conform to the standards of any technical society, organization or body, it shall be construed to mean the latest standard, code, specification or tentative specification adopted and published at the date of advertisement for proposals, even though reference has been made to an earlier standard, and such standards are made a part hereof to the extent which is indicated or intended.

Reference to a technical society, organization or body may be made in the Specifications by abbreviations, in accordance with the following list:

AASHTO for American Association of State Highway and Transportation Officials (formerly AASHO)
ACI for American Concrete Institute
AGMA for American Gear Manufacturer's Association
AFBMA for Anti-Friction Bearing Manufacturer's Association
AISC for American Institute of Steel Construction
AISI for American Iron and Steel Institute
ANSI for American National Standards Institute
ASCE for American Society of Civil Engineers
ASTM for American Society for Testing and Materials
ASME for American Society of Mechanical Engineers
AWS for American Welding Society
AWWA for American Water Works Association
AWPA for American Wood Preservers Association
CEMA for Conveyor Equipment Manufacturers Association
CIPRA for Cast Iron Pipe Research Association
IEEE for Institute of Electrical and Electronic Engineers
IPCEA for Insulated Power Cable Engineers Association
NEC for National Electrical Code
NEMA for National Electrical Manufacturers Association
SAE for Society of Automotive Engineers
SHBI for Steel Heating Boiler Institute
Fed.Spec. for Federal Specifications
Navy Spec. for Navy Department Specifications
U.L.,Inc. for Underwriters' Laboratories, Inc.

When no reference is made to a code, standard or specification, the Standard Specifications of the ANSI, the ASME, the ASTM, the IEEE, or the NEMA shall govern.

G-4.04 SAMPLES

The Contractor shall, when required, submit to the Engineer for approval typical samples of materials and equipment. The samples shall be properly identified by tags and shall be submitted sufficiently in advance of the time when they are to be incorporated into the work, so that rejections thereof will not cause delay. A letter of transmittal, in duplicate, from the Contractor requesting approval must accompany all such samples.

G-4.05 EQUIVALENT QUALITY

Whenever, in the Contract Documents, an article, material, apparatus, equipment, or process is called for by trade name or by the name of a patentee, manufacturer, or dealer or by reference to catalogs of a manufacturer or dealer, it shall be understood as intending to mean and specify the article, material, apparatus, equipment or process designated, or any

equal thereto in quality, finish, design, efficiency, and durability and equally serviceable for the purposes for which it is intended.

Whenever material or equipment is submitted for approval as being equal to that specified, the decision as to whether or not such material or equipment is equal to that specified shall be made by the Engineer.

Upon rejection of any material or equipment submitted as the equivalent of that specifically named in the Contract, the Contractor shall immediately proceed to furnish the designated material or equipment.

Neither the approval by the Engineer of alternate material or equipment as being equivalent to that specified nor the furnishing of the material or equipment specified, shall in any way relieve the Contractor of responsibility for failure of the material or equipment, due to faulty design, material, or workmanship, to perform the functions required of them by the Specifications.

G-4.06 DELIVERY

The Contractor shall deliver materials in ample quantities to insure the most speedy and uninterrupted progress of the work so as to complete thw work within the allotted time. The Contractor shall also coordinate deliveries in order to avoid a delay in, or impediment of, the progress of the work of any related Contractor.

G-4.07 CARE AND PROTECTION

The Contractor shall be solely responsible for properly storing and protecting all materials, equipment, and work furnished under the Contract from the time such materials and equipment are delivered at the site of the work until final acceptance thereof. He shall, at all times, take necessary precautions to prevent injury or damage by water, freezing, or by inclemencies of the weather to such materials, equipment and work. All injury or damage to materials, equipment, or work resulting from any cause whatsoever shall be made good by the Contractor.

The Engineer shall, in all cases, determine the portion of the site to be used by the Contractor for storage, plant or for other purposes. If, however, it becomes necessary to remove and restack materials to avoid impeding the progress of any part of the work or interference with the work to be done by any other Contractor, the Contractor shall remove and restack such materials at his own expense.

G-4.08 TOOLS AND ACCESSORIES

The Contractor shall, unless otherwise stated in the Contract Documents, furnish with each type, kind or size of equipment, one complete set of suitably marked high grade special tools and appliances which may be needed to adjust, operate, maintain, or repair the equipment. Such tools and appliances shall be furnished in approved painted steel cases, properly labeled and equipped with good grade cylinder locks and duplicate keys.

Spare parts shall be furnished as specified.

Each piece of equipment shall be provided with a substantial nameplate, securely fastened in place and clearly inscribed with the manufacturer's name, year of manufacture, serial number, weight and principal rating data.

G-4.09 INSTALLATION OF EQUIPMENT

The Contractor shall have on hand sufficient proper equipment and machinery of ample capacity to facilitate the work and to handle all emergencies normally encountered in work of this character.

Equipment shall be erected in a neat and workmanlike manner on the foundations at the locations and elevations shown on the Plans, unless directed otherwise by the Engineer during installation. All equipment shall be correctly aligned, leveled and adjusted for satisfactory operation and shall be installed so that proper and necessary connections can be made readily between the various units.

The Contractor shall furnish, install and protect all necessary anchor and attachment bolts and all other appurtenances needed for the installation of the devices included in the equipment specified. Anchor bolts shall be as approved by the Engineer and made of ample size and strength for the purpose intended. Substantial templates and working drawings for installation shall be furnished.

The Contractor shall, at his own expense, furnish all materials and labor for, and shall properly bed in non-shrink grout, each piece of equipment on its supporting base that rests on masonry foundations. Grout shall completely fill the space between the equipment base and the foundation.

G-4.10 OPERATING INSTRUCTIONS

The Contractor, through qualified individuals, shall adequately instruct designated employees of the City in the operation and care of all equipment installed hereunder, except for equipment that may be furnished by the City.

The Contractor shall also furnish and deliver to the Engineer three complete sets for permanent files, identified in accordance with Subsection G-3.01 hereof, of instructions, technical bulletins and any other printed matter, such as diagrams, prints or drawings, containing full information required for the proper operation, maintenance, and repair, of the equipment installed and the ordering of spare parts, except for equipment that may be furnished by the City.

In addition to the above three copies, the Contractor shall furnish any additional copies that may be required for use during construction and start-up operations.

G-4.11 SERVICE OF MANUFACTURER'S ENGINEER

The Contract prices for equipment shall include the cost of furnishing a competent and experienced engineer or superintendent who shall represent the manufacturer and shall assist the Contractor, when required, to install, adjust, test and place in operation the equipment in conformity with the Contract Documents. After the equipment is placed in

permanent operation by the City, such engineer or superintendent shall make all adjustments and tests required by the Engineer to provide that such equipment is in proper and satisfactory operating condition, and shall instruct such personnel as may be designated by the City in the proper operation and maintenance of such equipment.

SECTION 5
INSPECTION AND TESTING

G-5.01 GENERAL
The Contractor's attention is hereby directed to Article 3.03 of the Agreement.

Inspection and testing of materials will be performed by the City unless otherwise specified.

For tests specified to be made by the Contractor, the testing personnel shall make the necessary inspections and tests and the reports thereof shall be in such form as will facilitate checking to determine compliance with the Contract Documents. Five copies of the reports shall be submitted and authoritative certification thereof must be furnished to the Engineer as a prerequisite for the acceptance of any material or equipment.

If, in the making of any test of any material or equipment, it is ascertained by the Engineer that the material or equipment does not comply with the Contract, the Contractor will be notified thereof and he will be directed to refrain from delivering said material and equipment, or to remove it promptly from the site or from the work and replace it with acceptable material, without cost to the City.

Tests of electrical and mechanical equipment and appliances shall be conducted in accordance with recognized test codes of the ANSI, ASME, or the IEEE, except as may otherwise be stated herein.

The Contractor shall be fully responsible for the proper operation of equipment during tests and instruction periods and shall neither have nor make any claim for damage which may occur to equipment prior to the time when the City formally takes over the operation thereof.

G-5.02 COSTS
All inspection and testing of materials furnished under this Contract will be performed by the City or duly authorized inspection engineers or inspection bureaus without cost to the Contractor, unless otherwise expressly specified.

The cost of shop and field tests of equipment and of certain other tests specifically called for in the Contract Documents shall be borne by the Contractor and such costs shall be deemed to be included in the contract price.

Materials and equipment submitted by the Contractor as the equivalent to those specifically named in the Contract may be tested by the City for compliance. The Contractor shall reimburse the City for the expenditures incurred in making such tests on materials and equipment which are rejected for noncompliance.

G-5.03 INSPECTIONS OF MATERIALS
The Contractor shall give notice, in writing to the Engineer, sufficiently in advance of his intention to commence the manufacture or preparation of materials especially manufactured or prepared for use in or as part of the permanent construction. Such notice shall contain a request for inspection, the date of commencement and the expected date of completion of the manufacture or preparation of materials. Upon receipt of such notice the Engineer will arrange to have a representative present at such times during the manufacture as may be necessary to inspect the materials or he will notify the Contractor that inspection will be made at a point other than the point of manufacture, or he will notify the Contractor that inspection will be waived. The Contractor must comply with these provisions before shipping any material. Such inspection shall not release the Contractor from the responsibility for furnishing materials meeting the requirements of the Contract Documents.

G-5.04 CERTIFICATE OF MANUFACTURE
When inspection is waived or when the Engineer so requires, the Contractor shall furnish to him authoritative evidence in the form of Certificates of Manufacture that the materials to be used in the work have been manufactured and tested in conformity with the Contract Documents. These certificates shall be notarized and shall include copies of the results of physical tests and chemical analyses, where necessary, that have been made directly on the product or on similar products of the manufacturer.

G-5.05 SHOP TESTS OF OPERATING EQUIPMENT
Each piece of equipment for which pressure, duty, capacity, rating, efficiency, performance, function, or special requirements are specified shall be tested in the shop of the maker in a manner which shall conclusively prove that its characteristics comply fully with the requirements of the Contract Documents. No such equipment shall be shipped to the work until the Engineer notifies the Contractor, in writing, that the results of such tests are acceptable.

Five copies of the manufacturer's actual test data and interpreted results thereof, accompanied by a certificate of authenticity sworn to by a responsible official of the manufacturing company, shall be forwarded to the Engineer for approval.

The cost of the shop tests and of furnishing manufacturer's preliminary and shop test data of operating equipment shall be borne by the Contractor.

G-5.06 PRELIMINARY FIELD TESTS
As soon as conditions permit, the Contractor shall furnish all labor, materials, and instruments and shall make preliminary field tests of equipment. If the preliminary field tests disclose any equipment furnished under this Contract which does not comply with the requirements of the Contract Documents, the Contractor shall, prior to the acceptance tests, make all changes, adjustments, and replacements required.

G-5.07 FINAL FIELD TESTS
Upon completion of the work and prior to final payment, all equipment and appliances installed under this Contract shall be subjected to acceptance tests as specified or required to prove compliance with the Contract Documents.

The Contractor shall furnish labor, fuel, energy, water and all other materials, equipment, and instruments necessary for all acceptance tests, at no additional cost to the City.

G-5.08 FAILURE OF TESTS
Any defects in the materials and equipment or their failure to meet the tests, guarantees or requirements of the Contract Documents shall be promptly corrected by the Contractor by replacements or otherwise. The decision of the Engineer as to whether or not the Contractor has fulfilled his obligations under the Contract shall be final and conclusive. If the Contractor fails to make those corrections or if the improved materials and equipment, when tested, shall again fail to meet the guarantees or specified requirements, the City, notwithstanding its partial payment for work, and materials and equipment, may reject the materials and equipment and may order the Contractor to remove them from the site at his own expense.

In case the City rejects any materials and equipment, then the Contractor shall replace the rejected materials and equipment within a reasonable time. If he fails to do so, the City may, after the expiration of a period of thirty calendar days after giving him notice in writing, proceed to replace such rejected materials and equipment, and the cost thereof shall be deducted from any compensation due or which may become due the Contractor under this Contract.

The City agrees to obtain other equipment within a reasonable time and the Contractor agrees that the City may use the equipment furnished by him without rental or other charges until the new equipment is obtained.

Materials or work in place that fails to pass acceptability tests shall be retested at the direction of the construction engineer all such retests shall be at the Contractor's expense. The rates charged shall be in accordance with the Department of Public Works current annual inspection contract which is available for inspection at the offices of the Department of Public Works.

G-5.09 FINAL INSPECTION
The procedures for final inspection shall be in accordance with the provisions of Article 4.07 of the Agreement. During such final inspections, the work shall be clean and free from water. In no case will the final estimate be prepared until the Contractor has complied with all the requirements set forth and the Engineer has made his final inspection of the entire work and is satisfied that the entire work is properly and satisfactorily cosntructed in accordance with the requirements of the Contract Documents.

SECTION 6

TEMPORARY STRUCTURES

G-6.01 GENERAL
All false work, scaffolding, ladders, hoistways, braces, pumping plants, shields, trestles, roadways, sheeting, centering forms, barricades, drains, flumes, and the like, any of which may be needed in the construction of any part of the work and which are not herein described or specified in detail, must be furnished, maintained and removed by the Contractor, and he shall be responsible for the safety and efficiency of such works and for any damages that may result from their failure or from their improper construction, maintenance, or operation.

G-6.02 PUBLIC ACCESS
At all points in the work where public access to any building, house, place of business, public road, or sidewalk would be obstructed by any action of the Contractor in executing the work required by this Contract, the Contractor shall provide such temporary structure, bridges or roadway as may be necessary to maintain public access at all times. At least one lane for vehicular traffic shall be maintained in streets in which the Contractor is working. Street closure permits are required from the Department of Public Works.

The Contractor shall provide suitable temporary bridges, as directed by the Engineer, at street intersections when necessary for the maintenance of vehicular and pedestrian traffic.

Prior to temporarily cutting of access to driveways and garages, the Contractor shall give twelve (12) hours notice to affected property owners. Interruptions to use of private driveways shall be kept to a minimum.

G-6.03 CONTRACTOR'S FIELD OFFICE
The Contractor shall erect, furnish and maintain a field office with a telephone at the site during the entire period of construction. He or an authorized agent shall be present at this office at all times while his work is in progress. Readily accessible copies of both the Contract Documents and the latest approved working drawings shall be kept at this field office.

G-6.04 TEMPORARY FENCE
If, during the course of the work, it is necessary to remove or disturb any fence or part thereof, the Contractor shall, at his own expense, if so ordered by the Engineer, provide a suitable temporary fence which shall be maintained until the permanent fence is replaced. The Engineer shall be solely responsible for the determination of the necessity for providing a temporary fence and the type of temporary fence to be used.

G-6.05 RESPONSIBILITY FOR TEMPORARY STRUCTURES
In accepting the Contract, the Contractor assumes full responsibility for the sufficiency and safety of all temporary structures or work and for any damage which may result from their failure or their improper construction, maintenance, or operation and will indemnify and save harmless the City from

all claims, suits or actions and damages or costs of every description arising by reason of failure to comply with the above provisions.

SECTION 7
TEMPORARY SERVICES

G-7.01 WATER
The Contractor shall provide the necessary water supply at his own expense. He shall, if necessary, provide and lay necessary waterlines from existing mains to the place of using, shall secure all necessary permits and pay for all taps to water mains or hydrants and for all water used at the established rates.

G-7.02 LIGHT AND POWER
The Contractor shall provide, at his own expense, temporary lighting and power facilities required for the proper prosecution and inspection of the work. If, in the opinion of the Engineer, these facilities are inadequate, the Contractor will not be permitted to proceed with any portion of the work affected thereby.

G-7.03 SANITARY REGULATIONS
The Contractor shall prohibit and prevent the committing of nuisances on the site of the work or on adjoining property and shall discharge any employee who violates this rule.

Ample washrooms and toilet facilities and a drinking water supply shall be furnished and maintained in strict conformity with the law by the Contractor for use by his employees.

G-7.04 ACCIDENT PREVENTION
Precautions shall be exercised at all times for the protection of persons and property. The safety provisions of applicable laws, building and construction codes shall be observed. The Contractor shall comply with the U. S. Department of Labor Safety and Health Regulations for construction promulgated under the Occupational Safety and Health Act of 1970 (PL 91-596), and under Section 107 of the Contract Work. Hours and Safety Standards Act (PL 91-54), except where state and local safety standards exceed the federal requirements and except where state safety standards have been approved by the Secretary of Labor in accordance with provisions of the Occupational Safety and Health Act.

G-7.05 FIRST AID
The Contractor shall keep upon the site, at each location where work is in progress, a completely equipped first aid kit and shall provide ready access thereto at all times when men are employed on the work.

G-7.06 HEATING
The Contractor shall provide temporary heat, at his own expense, whenever required on account of work being carried on during cold weather and to prevent freezing of water pipes and other damage to the work.

SECTION 8

LINES AND GRADES

G-8.01 GENERAL
All work done under this Contract shall be constructed in accordance with the lines and grades shown on the Plans, or as given by the Engineer. The full responsibility for keeping alignment and grade shall rest upon the Contractor.

The Engineer will establish bench marks and base line controlling points. Reference remarks for lines and grades as the work progresses will be located to cause as little inconvenience to the prosecution of the work as possible. The Contractor shall so place excavation and other materials as to cause no inconvenience in the use of the use of the reference marks provided. He shall remove any obstructions placed by him contrary to this provision.

G-8.02 SURVEYS
The Contractor shall furnish and maintain, at his own expense, stakes and other such materials, and give such assistance, including qualified helpers, as may be required by the Engineer for setting reference marks. The Contractor shall check such reference marks by such means as he may deem necessary and, before using them, shall call the Engineer's attention to any inaccuracies. The Contractor shall, at his own expense, establish all working or construction lines and grades as required from the reference marks set by the Engineer, and shall be solely responsible for the accuracy thereof. He shall, however, be subject to the check and review of the Engineer.

The Contractor shall keep the Engineer informed a reasonable time in advance as to his need for line and grade reference marks, in order that they may be furnished and all necessary measurements made for record and payment with the minimum of inconvenience to the Engineer or of delay to the Contractor.

It is the intention not to delay the work for the establishment of reference marks but, when necessary, working operations shall be suspended for such reasonable time as the Engineer may require for this purpose.

G-8.03 SAFEGUARDING MARKS
The Contractor shall safeguard all points, stakes, grade marks, monuments and bench marks made or established on the work, bear the cost of reestablishing them if disturbed, and bear the entire expense of rectifying work improperly installed due to not maintaining or protecting or to removing without authorization such established points, stakes and marks.

The Contractor shall safeguard all existing and known property corners, monuments and marks adjacent to but not related to the work and, if required, shall bear the cost of reestablishing them if disturbed or destroyed.

G-8.04 DATUM PLANE
All elevations indicated or specified refer to the Mean Sea Level Datum of the U.S.C. & G.S. (N.O.S.) which is 0.80 feet above the Mean Low Water Datum of the U. S. Army

Corps of Engineers.

SECTION 9
ADJACENT STRUCTURES AND LANDSCAPING

G-9.01 RESPONSIBILITY
The responsibility for removal, replacement, relocation, repair, rebuilding or protection of all public utility installations, including poles, tracks, pipes, wires, conduits, house service connections, vaults, manholes, sewers, traffic control and fire alarm signal circuit installations and other appurtenances and facilities shall be in accordance with G-1.02 and G-1.03.

The Contractor shall also be entirely responsible and liable for all damage or injury as a result of his operations to all other adjacent public and private property, structures of any kind and appurtenances thereto met with during the progress of the work. The cost of protection, replacement in their original locations and conditions or payment of damages for injuries to such adjacent public and private property and structures affected by the work, whether or not shown on the Plans, and the removal, relocation, and reconstruction of such items called for on the Plans or specified shall be included in the various Contract Items and no separate payment will be made therefor. Where such public and private property, structures of any kind and appurtenances thereto are not shown on the Plans and when, in the opinion of the Engineer, removal or relocation and reconstruction is necessary to avoid interference with the work, payment therefor will be made as provided for extra work in Article 7.02 of the Agreement.

G-9.02 PROTECTION OF TREES
All trees and shrubs shall be adequately protected by the Contractor with boxes or otherwise and, within the City of Tampa, in accordance with ordinances governing the protection of trees. No excavated materials shall be placed so as to injure such trees or shrubs. Trees or shrubs destroyed by negligence of the Contractor or his employees shall be replaced by him with new stock of similar size and age, at the proper season, and at the sole expense of the Contractor.

Beneath trees or other surface structures, where possible, pipelines may be built in short tunnels, backfilled with excavated materials, except as otherwise specified, or the trees or structures carefully supported and protected from damage.

The City may order the Contractor, for the convenience of the City, to remove trees along the line of trench excavation. If so ordered, the City will obtain any permits required for removal of trees. Such tree removal ordered shall be paid for under the appropriate Contract Items.

G-9.03 LAWN AREAS
Lawn areas shall be left in as good condition as before the starting of the work. Where sod is to be removed, it shall be carefully removed and later replaced, or the area where sod has been removed shall be restored with new sod in the manner described in the Technical Specifications section.

G-9.04 RESTORATION OF FENCES
Any fence, or part thereof, that is damaged or removed during the course of the work shall be replaced or repaired by the Contractor and shall be left in as good a condition as before the starting of the work. The manner in which the fence is repaired or replaced and the materials used in such work shall be subject to the approval of the Engineer. The cost of all labor, materials, equipment, and work for the replacement or repair of any fence shall be deemed included in the appropriate Contract Item or Items, or if no specific Item is provided therefor, as part of the overhead cost of the work, and no additional payment will be made therefor.

SECTION 10
PROTECTION OF WORK AND PUBLIC

G-10.01 TRAFFIC REGULATIONS
The Contractor shall arrange his work to comply with Article G-6.02. The work shall be done with the least possible inconvenience to the public and to that end the work may be confined by the Engineer to one block at a time.

G-10.02 BARRIERS AND LIGHTS
During the prosecution of the work, the Contractor shall put up and maintain at all times such barriers, and lights, as will effectually prevent accidents. The Contractor shall provide suitable barricades, red lights, "danger" or "caution" or "street closed" signs and watchmen at all places where the work causes obstructions to the normal traffic or constitutes in any way a hazard to the public. Such barriers and signs shall be constructed to State of Florida Department of Transportation standards and placed as recommended by the Traffic Division of the City's Department of Public Works.

No open fires will be permitted.

G-10.03 SMOKE PREVENTIONS
The Contractor shall use hard coal, coke, oil or gas as fuel for equipment generating steam. A strict compliance with ordinances regulating the production and emission of smoke will be required.

G-10.04 NOISE
The Contractor shall eliminate noise to as great an extent as practicable at all times. Air compressing plants shall be equipped with silencers and the exhaust of all gasoline motors or other power equipment shall be provided with mufflers. In the vicinity of hospitals and schools, special care shall be used to avoid noise or other nuisances. The Contractor shall strictly observe all local regulations and ordinances covering noise control.

Except in the event of an emergency, no work shall be done between the hours of 7:00 p.m. and 7:00 a.m., or on Sundays. If the proper and efficient prosecution of the work requires operations during the night, the written permission of the Engineer shall be obtained before starting such items of the work.

G-10.05 ACCESS TO PUBLIC SERVICES
Neither the materials excavated nor the materials or plant used in the construction of the work shall be so placed as to prevent free access to all fire hydrants, valves or manholes.

G-10.06 DUST PREVENTION
The Contractor shall prevent dust nuisance from his operations or from traffic by keeping the streets sprinkled with water at all times.

G-10.07 PRIVATE PROPERTY
The Contractor shall so conduct the work that no equipment, material, or debris will be placed or allowed to fall upon private property in the vicinity of the work unless he shall have obtained the owner's written consent thereto and shall have shown this consent to the Engineer.

SECTION 11
SLEEVES AND INSERTS

G-11.01 COORDINATION
When the Contract requires the placing of conduits, saddles, boxes, cabinets, sleeves, inserts, foundation bolts, anchors, and other like work in floors, roofs, or walls of buildings and structures, they shall be promptly installed in conformity with the construction program. The Contractor who erects the floors, roofs, and walls shall facilitate such work by fully cooperating with the Contractors responsible for installing such appurtenances. The Contractor responsible for installing such appurtenances shall arrange the work in strict conformity with the construction schedule and avoid interference with the work of other contractors.

G-11.02 OPENINGS TO BE PROVIDED
In the event timely delivery of sleeves and other materials cannot be made and to avoid delay, the affected Contractor may arrange to have boxes or other forms set at the locations where the appurtenances are to pass through or into the floors, roofs, walls, or other work. Upon the subsequent installation of these appurtenances, the Contractor erecting the structure shall fill around them with materials as required by the Contract. The necessary expenditures incurred for the boxing out and filling in shall be borne by the Contractor or Contractors required to furnish the sleeves and inserts. Formed openings and later installation of sleeves will not be permitted at locations subject to hydrostatic pressure.

SECTION 12
CUTTING AND PATCHING

G-12.01 GENERAL
The Contractor shall do all cutting, fitting, or patching of his portion of the work that may be required to make the several parts thereof join and coordinate in a manner satisfactory to the Engineer and in accordance with the Plans and Specifications. The work must be done by competent workmen skilled in the trade required by the restoration.

SECTION 13
CLEANING

G-13.01 DURING CONSTRUCTION
During construction of the work, the Contractor shall, at all times, keep the site of the work and adjacent premises as free from material, debris, and rubbish as is practicable and shall remove the same from any portion of the site if, in the opinion of the Engineer, such material, debris, or rubbish constitutes a nuisance or is objectionable.

The Contractor shall remove from the site all of his surplus materials and temporary structures when no further need therefor develops.

G-13.02 FINAL CLEANING
At the conclusion of the work, all erection plant, tools, temporary structures and materials belonging to the Contractor shall be promptly taken away, and he shall remove and promptly dispose of all water, dirt, rubbish or any other foreign substances.

The Contractor shall thoroughly clean all equipment and materials installed by him and shall deliver such materials and equipment undamaged in a bright, clean, polished, and new appearing condition.

SECTION 14
MISCELLANEOUS

G-14.01 PROTECTION AGAINST SILTATION AND BANK EROSION
The Contractor shall arrange his operations to minimize siltation and bank erosion on construction sites and on existing or proposed watercourses and drainage ditches.

G-14.02 EXISTING FACILITIES
The work shall be so conducted to maintain existing facilities in operation insofar as is possible. Work shall be scheduled to minimize bypassing during construction. Requirements and schedules of operations for maintaining existing facilities in service during construction shall be as described in the Special Provisions.

G-14.03 USE OF CHEMICALS
All chemicals used during project construction or furnished for project operation, whether herbicide, pesticide, disinfectant, polymer, reactant or of other classification, must show approval of either EPA or USDA. Use of all such chemicals and disposal of residues shall be in strict conformance with instructions.

* * * * * * *

SPECIFIC PROVISIONS

SP-1 Scope

The work included under these Contract Documents comprises of the installation of stormwater systems and all miscellaneous and appurtenant work to complete a project.

This project is an annual contract to construct stormwater projects on a work order basis.

The Contractor shall furnish all labor, materials and equipment for the accomplishment of all work as described in the Specifications as specified by each work order, and as directed by the Engineer in accordance with the obvious or expressed intent of the Contract.

The purpose of this contract is to provide the City with complete construction of stormwater pipe projects throughout the contract duration. Written Work Orders with project plans or maps and quantity of individual items will be issued by the City of Tampa, Department of Transportation and Stormwater Services, for each project location.

The work consists of furnishing, constructing, installing, testing and maintaining (during construction) the said storm and sanitary sewers and structures complete and in place.

SP-2 Permits

The Contractor will obtain permits required from any State or County agencies having jurisdiction over the roadways and for any railroad or highway crossings shown on the Plans. The Contractor shall be required to comply with all provisions of such permits regarding workmanship, schedules, maintenance of traffic, and notification of starting construction, pavement removal and replacement and other conditions under which the permit is issued. The contractor will obtain right-of-way use permits from Hillsborough County and City of Tampa as necessary for work within right-of-ways. The contractor shall obtain necessary tree removal, root pruning, and tree trimming permits including for both grand tree and non-grand trees as required and shall comply with conditions of said permits with any property owner noticing as necessary per Chapter 13 of the City of Tampa Natural Resource Code.

The Contractor shall obtain all permits required to comply with SP-4.C Maintenance of Traffic and Roadway Closure Limitations, contained herein.

The Contractor shall have in his possession the proper license to perform the work before submittal of his bid and shall obtain any required City/County building permits and shall obtain and pay for all other licenses and authorizations required for the prosecution of the work, including the cost of all work performed in compliance with the terms and conditions of such permits, licenses and authorizations, whether by himself or others.

All other permit fees will be paid by the City except for right-of-way, MOT and tree removal permit fees which will be paid by the Contractor.

The Contractor shall require all subcontractors to be currently licensed by the City to perform the proposed work in their respective fields and to obtain permits for the execution of said work.

All work shall be performed in accordance with the licenses, permits and the requirements of the current Building and Construction Regulations Chapter of the City of Tampa Code.

The Contractor is responsible to schedule and coordinate with the City of Tampa Contract Administration Department for all required inspections and tests for all phases of work to obtain final approval thereof.

SP-3 Intent

Stormwater facilities work not specified in either the Plans or in the Specifications, but involved in carrying out their intent or in the complete and proper execution of the work, is required and shall be performed by the Contractor in accordance with the City of Tampa Technical Standards and Florida Department of Transportation Standard Specifications for Road and Bridge Construction, as though it were specifically delineated or described. The cost of this work shall be included in the cost of the pay item to which it is incidental, and no additional payment will be made therefor.

SP-4.C Maintenance of Traffic and Roadway Closure Limitations

The Contractor shall arrange his work so as to minimize traffic disruption. As deemed necessary, roadway closures shall occur at off hours.

At least seventy-two hours before starting any work in City streets, the Contractor shall obtain a City of Tampa Street Closure Permit for any traffic lane or street closure within the City. The permit will establish the requirements for closures related to the number of lanes and time of day lanes or streets may be closed. If the Contractor proposes a complete street closure, a detailed traffic maintenance plan shall be submitted to the City of Tampa Traffic Engineering Division together with the application for the Street Closure Permit. The traffic maintenance plan shall include proposed detour routes and locations and descriptions of direction signs for the construction area and detour routes. Two approved copies of all Street Closure Permits shall be submitted to the Engineer before starting any work in City streets. No changes to approved Street Closure Permits will be permitted without prior approval by the City. Any work within Hillsborough County right-of-way, contractor shall obtain any necessary permits.

The Contractor shall furnish and maintain all necessary signs, barricades, lights and flagmen necessary to control traffic and provide for safety to the public, all in compliance with the Florida Department of Transportation "Manual on Traffic Controls and Safe Practices for Street and Highway Construction, Maintenance and Utility Operations," with subsequent revisions and additions, and to the satisfaction of the Engineer.

The cost of maintaining traffic and of any additional earth excavation, selected fill, temporary wearing surface, temporary bridges, barricades, warning lights, flagmen, and like work required therefor shall be included under the various classified unit price Contract Items, or in the total Lump Sum Price, as applicable, and no additional payment will be made therefor.

SP-6 Environmental Protection

The Contractor will be held liable for the violation of any and all environmental regulations. Violation citations carry civil penalties and in the event of willful violation, criminal penalties.

The fact that the permits are issued to the City does not relieve the Contractor in any way of his environmental obligations and responsibilities.

SP-7 Use of Explosives

Explosives will not be used on the work except when authorized by the Engineer. The use of same, if authorized, shall conform to laws or ordinances which may pertain to the use of same and the utmost care will be exercised by the Contractor so as not to endanger life or property. The Contractor will assume full responsibility in connection with use of any explosives even though authorized. Explosives will not be stored within the City limits.

SP-7.01 Temporary Facilities and Controls

Temporary Water Supply

Supplemental to the requirements outlined in Article G-7.01 of the General Provisions, all reasonable amounts of water required by the Contractor for the water main testing and flushing under this agreement will be furnished by the City from the existing water system without cost to the Contractor. The Contractor shall request temporary hydrant meters with backflow prevention devices when connecting to existing water system hydrants. A security deposit for the meter is required. The deposit will be returned when the meter is returned to the Contractor. City Crews will install the meter with backflow-preventer on the hydrant. The Contractor shall make any necessary water supply connections at his own expense at a point designated by the City. These connections shall be maintained by the Contractor, who shall furnish all pipe, valves, and such other equipment necessary or required. Temporary piping may run above ground when there is no possibility of traffic, and it can be done safely. Otherwise, it must run underground and in such manner as to meet the approval of the City.

At the discretion of the City, unnecessary waste of water after notification will be cause for use of water to be discontinued. After temporary lines have served their purpose, they shall be removed by the Contractor and all connections closed or plugged to the satisfaction of the City.

SP-8 Construction Start

Construction will not begin prior to receipt by the City of the required permits. If issuance of the Notice to Proceed is delayed due to permit acquisition, the contract time will be extended to suit, but no extra payment will be made to the Contractor.

SP-9 Coordination and Cooperation

In performing work under this Contract, the Contractor shall coordinate his work with that of any adjacent contractors for the City, and others, and cooperate with them in every reasonable way, to the end that there shall be the minimum practicable interference with their operations.

SP-10 Connections Between Construction

The Contractor shall provide an approved type masonry bulkhead, spigot plug, bell cap, or standard pipe plug, manhole, junction chamber, pipe stub or other location to provide for terminating construction when the work is performed in phases and the connecting phase is not

complete.

The Contractor shall remove any such bulkhead or plug encountered when connecting to previously completed pipe.

The cost of furnishing and removing bulkheads and plugs shall be included in the various classified unit price Contract Items for pipe lines, or in the total Lump Sum Price, as applicable, and no separate payment will be made therefor.

SP-11 Construction Easements

In the event that, in the opinion of the Contractor, obtaining a temporary construction easement is necessary or desirable, it shall be the sole responsibility of the Contractor to obtain such easements from the Owner of the property. If such easements are obtained by the Contractor, they shall contain provisions to hold the City harmless from any operations of the Contractor within the easement limits. The Contractor shall not conduct construction operations on private property outside the limits of any easement obtained by the City or of any City-owned right-of-way unless a copy of the temporary construction easement agreement is filed with the Engineer.

SP-12 Releasing Facilities for Use

It is the intent of these Specifications that all newly constructed sewers and appurtenant facilities be placed in service as rapidly as an integrated portion of the facilities can be constructed, inspected and accepted by the Engineer. Acceptance or use by the City of any portion of the facilities prior to final acceptance shall not relieve the Contractor of any responsibilities, regarding such facilities, included in the Contract.

SP-13 Material and Equipment Approval

The Contractor shall not enter into any subcontracts, or place any order, for the furnishing of any material or equipment until he has received the Engineer's written approval of the manufacturers.

SP-14 Contractor Emergency Response Time

The Contractor must be available to service emergency calls seven (7) days a week, twenty-four (24) hours a day. The response time for emergency calls shall be within two (2) hours. A contact person and telephone number shall be provided to the Engineer for such purposes.

SP-16 Salvage

All existing pipe and appurtenances removed by the Contractor and which are not designated to be salvaged shall become the property of the Contractor and shall be removed from the site of the work to the Contractor's own place of disposal.

Items which are shown on the Plans or specified to be salvaged shall be removed by the Contractor, delivered, and unloaded at a location within the Department’s service area, as directed by the Engineer. The cost of removing, disposing, delivering, and unloading salvage items of pipe and appurtenances shall be included in the various classified unit price Contract Items or in the total Lump Sum Price, as applicable, and no separate payment will be made therefor.

SP-16.01 Maintenance of Continuous Water Services

At the conclusion of every work day, the Contractor is responsible for ensuring that all water services within his effective work area are in service. If a water customer contacts the Department to advise that they have no water service and it is determined to be within the Contractor's work area, the Contractor will be notified of the interrupted service through the Department dispatcher and/or inspection division. Upon notification, the Contractor must mobilize to the site and reinstate the customer's water service.

If the Contractor fails to mobilize his forces to make the repairs, the Department will mobilize its own forces to reinstate the customer's water services. In this event, the Contractor shall be charged a five hundred dollar ($500.00) flat rate fee plus actual direct department costs for labor, materials, and equipment used to reinstate the water service. This five hundred-dollar fee and Department cost will be charged for each additional service reinstated. The amount charged will be deducted from the Contractor's payment.

SP-17 Sequence of Operations

The Contractor shall develop with the Engineer a complete schedule of operations which, in the opinion of the Engineer, will permit use of the facility at the earliest possible date.

Taking over of parts of the work for operation before completion of the entire project shall not relieve the Contractor of any responsibility for proper integrated operations of all parts of the work, nor shall it act to relieve him of any responsibilities under Article A-6.04 of the Agreement, for guaranty of all parts of the work, for one year after the date of acceptance of all the work on the project.

Contractor will not be permitted to close roadway corridor accessed by residents for two or more sequences of construction. Sewer and Storm must be installed and performed in one cut. Additional closures for restoration & other utility construction must be approved by the City.

See section SP-4.C for roadway closure limitations.

SP-17.01 SHUTDOWNS

Unless otherwise approved by the Engineer in an emergency situation, scheduled shutdowns may only occur on Mondays, Tuesdays and Wednesdays. The Contractor shall notify the Engineer at least two weeks in advance of the need for a scheduled shutdown.

Where connections are made to the existing mains, or where other occurrences require a shutdown, the Contractor shall work with the City to perform the work necessary to complete the shutdown. The City will make every effort in advance to perform pre-valve shutdowns, but there are no guarantees as to whether or not all valves will properly seat in order to guarantee a complete shutdown. In the event of an emergency, the Contractor shall immediately notify the City.

SP-18 Dewatering

Dewatering is the responsibility of the Contractor. All costs associated with ground dewatering and surface water pumping shall be included in the appropriate contract price for items to which dewatering is incidental, as applicable, and no separate payment shall be made therefor. The Contractor shall apply to FDEP for dewatering permit at his cost.

Before commencing any excavation at the site of the work, the Contractor shall submit to the Engineer and obtain his approval of the methods and equipment and arrangement of facilities proposed for the removal and disposal of water at the site and of all water entering any excavation or other part of the work from any source whatsoever. Adequate standby facilities shall be provided to ensure that the excavation will be kept dry and by pass waters flow in the event of power failure or mechanical breakdown. Facilities for removal and disposal of water shall be of sufficient capacity to keep the excavation dry under all circumstances with one-half of the facilities out of service. If well points are used, provision shall be made for removing and resetting individual well points without taking the system of which they are a part out of service.

Contractor shall prepare several hundred feet ahead of construction area of well point dewatering to incrementally move storm pipe and sewer pipe installation and prepare for roadway open cuts on a timely schedule to minimize the time frame of roadway and driveway closures to residents. Contractor may utilize FDOT type sediment removal box system to treat water prior to discharge to manage turbidity.

SP-19 Prevention, Control and Abatement of Erosion and Water Pollution

The Contractor shall be responsible for prevention, control and abatement of erosion, siltation and water pollution resulting from construction of the project until final acceptance of the project.

He shall provide, install, construct, and maintain any covering, mulching, sodding, sand bagging, berms, slope drains, sedimentation structures, or other devices necessary to meet City, County, State and Federal regulatory agency codes, rules and laws.

The Contractor shall take sufficient precautions to prevent pollution of streams, canals, lakes, reservoirs and other water impoundments with fuels, oils, bitumen, calcium chloride or other harmful materials. Also, he shall conduct and schedule his operations so as to avoid or otherwise minimize pollution or siltation of such streams, and the like, and to avoid interference with movement of migratory fish. No residue from dust collectors or washers shall be dumped into any live stream.

Storm drainage facilities, both open and closed conduit, serving the construction area shall be protected by the Contractor from pollutant and contaminants. If the Engineer determines that siltation of drainage facilities has resulted due to the project, the Engineer will advise the Contractor to remove and properly dispose of the deposited material. Should the Contractor fail to or elect not to remove the deposits, the City will provide maintenance cleaning as needed and will charge all costs of such service against the amount of money due or to become due the Contractor.

Construction operations in rivers, channels, streams, tidal waters, canals and other impoundments shall be restricted to those areas where it is necessary to perform filling or excavation to accomplish the work shown in the Plans and to those areas which must be entered to construct temporary or permanent structures. As soon as conditions permit, rivers, channels, streams and impoundments shall be promptly cleared of all obstructions placed therein or caused by construction operations.

Except as necessary for construction, excavated materials shall not be deposited in rivers, streams, canals or impoundments, or in a position close enough thereto to be washed away by high water or runoff.

The Contractor shall not disturb lands or waters outside the limits of construction except as may be found necessary and authorized by the Engineer.

The location of and methods of operation in all detention areas, borrow pits, material supply pits and disposal areas furnished by the Contractor shall meet the approval of the Engineer as being such that erosion during and after completion of the work will not likely result in detrimental siltation or water pollution.

The Contractor shall schedule his operations such that the area of unprotected erodible earth exposed at any one time is not larger than the minimum area necessary for efficient construction operations; and the duration of exposed, uncompleted construction to the elements shall be as short as practicable.

Clearing and grubbing shall be so scheduled and performed that grading operations can follow immediately thereafter and grading operations shall be so scheduled and performed that permanent erosion control features can follow immediately thereafter if conditions on the project permit.

The Engineer may limit the surface areas of unprotected erodible earth exposed by clearing and grubbing, excavation or filling operations and may direct the Contractor to provide immediate erosion or pollution control measures to prevent siltation or contamination of any river, stream, channel, tidal waters, reservoir, canal or other impoundment or to prevent damage to the project or property outside the project right of way.

SP–20 Layout Data

The City will provide horizontal and vertical control or reference points for each project. From these control or reference points, the Contractor will set construction layout stakes and/or offsets necessary to complete the required work. All work shall be subject to field changes as directed by the Engineer.

Compensation for construction layout will be included in the price of the various respective pay items for pipeline installation. . Prior to commencement of construction, the Contractor shall obtain the Department's acceptance of the layout. It shall be the Contractor's responsibility to protect said stakes and/or offsets until, in the opinion of the Department, they have served their designated purpose. If re-staking and/or re-offsetting are required, the

cost of re-staking and/or re-offsetting will be at the Contractor's expense.

All survey and layout costs will be included in the appropriate other unit prices and for which no separate payment will be made. The survey will be performed by Florida Registered Land Surveyor. A copy of the signed and sealed survey layout will be provided to the Engineer as certification of the completion of the layout.

SP-21 Informational Signs/Project Signs

The Contractor shall provide at least two (2) and up to four (4) each 48" x 48" informational signs, lettered and located in accordance with Department of Transportation and Stormwater Services, Traffic Division.

The cost of fabrication, erection, maintenance and removal upon project completion of the informational signs, including all labor and materials, shall be deemed included in the prices bid for the various Contract Items of this Contract, or in the total Lump Sum Price, as applicable, and no separate payment will be made therefor. No extra payment will be made for obliterating of certain information and replacement thereof with other because of changes during the course of the Contract. The signs can be reused for each project.

SP-22 Construction Operations

In City streets, excavated materials shall, where practicable, be deposited upon streets, sidewalks, driveways, or other paved surfaces within the street right-of-way, except that interruptions to the use of driveways shall be kept to a minimum. The Contractor shall clean up areas from which soil has been removed at the end of each day by sweeping, washing, or other approved methods. When the work is halted by rain, the Contractor shall clean up the working areas before leaving the site.

Trenches shall be protected at the close of each day's operations by lighted barricades, fences, and other methods to the satisfaction of the Engineer. Fences shall meet OSHA standards and be structurally stable as approved by the Engineer. No excavations shall be left open over a weekend.

In general, pipes shall be laid in open cut, except when another method, such as jacking, augering or tunneling is shown on the Plans, specified or ordered.

In City, State and County highways, excavated materials shall not be stored or cast upon the pavement, unless an advance approval of the governing agency is first obtained by the Contractor.

Please refer to roadway closure limitations in SP4.C

SP-23 Project Cleanup

The Contractor shall conduct his operations in such a manner that will result in a minimum of inconvenience to occupants of adjacent homes and business establishments and shall provide temporary access as directed or as conditions in any particular location may require as determined by the Engineer. All restoration must be performed to an equal or better condition than that which existed prior to construction.

Good housekeeping on this project is extremely important and the Contractor will be responsible for keeping the construction site neat and clean, with debris being removed daily as the work progresses or as otherwise directed by the Engineer. Good housekeeping at the job site shall include: removing all tools and temporary structures, dirt, rubbish, etc.; hauling all excess dirt, rock, etc. from excavations to a dump provided by the Contractor; and all clean-up shall be accomplished to the satisfaction of the Engineer. Immediately after construction is completed in an area or part thereof (including restoration), barricades, construction equipment and surplus and discarded materials shall be removed by the Contractor.

In the event that the timely clean-up and restoration of the job site is not accomplished to the satisfaction of the Engineer, the Engineer may make arrangements to effect the necessary clean-up by others. The Contractor shall be back-charged for these costs. If such action becomes necessary on the part of and in the opinion of the Engineer, the Department shall not be responsible for the inadvertent removal from the work site of materials which the Contractor would not normally have disposed of had he affected the required clean-up.

At the completion of each workday, the Contractor shall fill all open trenches and pits. Trenches and pits may remain open only if the Contractor has obtained permission from the appropriate permitting agency and all protection and warning devices are in place in working order.

The Contractor shall replace all open cut road pavements with a temporary compacted surface capable of supporting sustained vehicular loads as soon as possible once the trench or pit has been filled and compacted in 6-inch lifts. The temporary surface shall be maintained by the Contractor at the elevation of the adjacent road surfaces.

The Contractor is responsible for the security of all tools, materials and equipment required for this project and must make all arrangements for safeguards he may deem necessary. The City will assume no liability for any such security or losses resulting from lack of security.

SP-25 Work in Streets

All work within streets and highways shall be subject to the regulations and requirements of the appropriate agencies. Within the City of Tampa, streets and highways are under the jurisdiction of the City of Tampa, Department of Transportation and Stormwater Services or State of Florida, Department of Transportation. Outside the City of Tampa, streets and highways are under the jurisdiction of the County of Hillsborough or the State Department of Transportation.

Methods and materials of construction used in restoration within such streets and highways, including pavement, sidewalk, curb, curb and gutter removal and replacement, replacement of storm sewerage facilities, excavation and backfilling, and the storage of plant, materials and equipment shall conform to the requirements of the City of Tampa and, where applicable, the County of Hillsborough or State Department of Transportation, and will be subject to the inspection and approval of the duly authorized representatives of the City, County and the State.

SP-26 Surface Restoration

Where construction activities are conducted in existing grassed areas, the grassed areas shall be restored as specified or directed by sodding or grassing. Such restoration of grassed areas shall conform to the requirements of the Workmanship and Materials section headed "Sodding."

The Contractor shall replace or repair all ground surfaces damaged during construction. Any bushes, flowers, gardens, patios, lighting system, other landscaping, and irrigation systems disturbed by the construction project shall be repaired or replaced by the Contractor. The cost of such ground surface repair shall be included in the various classified unit price Contract Items, or in the specific contract item, as applicable, and no separate payment will be made therefor. Existing corrugated metal and concrete pipe culverts removed during the construction work shall be stored and maintained in sound, useful condition and replaced upon completion of the work. Culverts damaged by the Contractor shall be replaced with new culverts meeting the applicable requirements of the Standard Specifications for Road and Bridge Construction published by the Florida Department of Transportation. No separate payment will be made for replacement of damaged culverts.

SP-27 Existing Public Facilities

Existing public facilities that are removed by construction operations under this contract shall be replaced by the Contractor to City of Tampa specifications. These items shall include all public benches, playground light poles, shelters, roadway signs, and replacement of these items shall be considered incidental to the cost of construction, and no separate payment will be made therefor.

SP-29 Utility Protection Considerations and Work Adjacent to Utilities

The Contractor shall protect all utilities and other facilities within and adjacent to the construction as covered in Section G-1.03, unless a utility firm has conclusively indicated, or such is shown on the Plans, that the certain adjustment, removal, reconstruction, or protection of the utility's facility will be performed by that respective utility.

The Contractor shall furnish, install, and remove sheeting and shoring and other protective measures as may be necessary to satisfactorily accomplish the construction of this project. The cost of such sheeting and shoring and other protective measures shall be included in the unit prices as bid for the storm or sanitary sewer pipe items, and no separate payment shall be made therefor.

SP-30 Conflict Structure

Where a sanitary sewer line runs through a conflict structure, the portion of sanitary sewer spanning the structure shall be PVC encased in a steel sleeve. The annular space between the PVC pipe and the steel sleeve shall be sealed at each end as shown in the plans and contract documents. Payment shall be made under the appropriate conflict structure item. Unit bid price in this case shall reflect the PVC pipe, steel sleeve, etc., required to meet the above requirements and the standard details.

SP-31 House Services

The various utilities, along the line of the work, which are shown on the Plans or located in the field during the course of the work, may have house services connected to them. The Contractor is required to give all utility agencies 48 hours' notice prior to start of work. The Contractor shall notify the various utility companies by calling the Sunshine State One Call of Florida, Inc. (1-800-432-4770) or, if necessary, by contacting the utilities individually. When such notice is properly given, the utility having jurisdiction will locate house services along the line of work. The Contractor shall protect all existing house services which are shown on the Plans or located in the field during the course of the work. The Contractor shall arrange his operations to avoid any damage or disruption of water, gas, sewer, electric, telephone, and other house services.

Methods and techniques used by the Contractor to protect and maintain house services shall be subject to the prior approval of the Engineer. Water and sewer services shall be maintained during construction and should be maintained active throughout the course of construction. Contractor shall provide temporary services for sewer and water to avoid interruption. Upon completion of storm, sewer, and water piping construction, contractor shall restore to final condition the water and sewer services as depicted in the plans and the project specifications.

Water and sewer services damaged or removed due to the work methods of the Contractor shall be replaced by the Contractor to such limits as directed by the Engineer, unless otherwise noted on the plans. Materials used for such replacements shall be similar to those in the existing service or shall conform to the current standards of the utility as directed by the Engineer. All damaged water and sewer services shall be promptly repaired and shall be returned to service within 24 hours after the damage has occurred.

Other public utility house services which are damaged or removed due to the work methods of the Contractor will be repaired by the utility having jurisdiction and the cost of such repairs shall be borne by the Contractor.

Where the relocation or special maintenance of house services, as shown on the Plans, is required during construction of new pipelines the disruption of such services shall be kept to a minimum period of time as approved by the Engineer.

Unless otherwise specified in other Contract Items, or in the total Lump Sum Price, as applicable, the cost of protecting, replacing, repairing, relocating and maintaining house services shall be included in the various classified unit price Contract Items for pipelines, or in the total Lump Sum Price, as applicable, and no separate payment will be made therefor.

The maintenance and guaranty provisions of the Agreement shall also apply to all repairs and replacements of damaged or relocated services accomplished by the Contractor.

SP-33 Protection of Trees and Shrubs

All trees and shrubs, except where otherwise shown or ordered, shall be adequately protected by boxes, fences, or otherwise carefully supported, as necessary, by the Contractor Per Chapter 13 of the City of Tampa Natural Resources Code Protective barricades shall be placed around all protected trees and grand trees and shall remain in place until all potentially damaging

construction activities are completed The Parks Department must inspect the site after tree protection devices have been installed and prior to construction. A 48-hour notice must be given to Planning and Growth Management, Natural Resources to schedule the inspection. No excavated or backfill material shall be placed in a manner which, in the opinion of the Engineer, may result in damage to trees or shrubs. Prior to mobilization, all exposed roots shall be covered with a two (2)-inch layer of mulch. The Contractor shall replace all trees or shrubs which are destroyed or damaged to such extent, in the opinion of the Engineer, to be considered destroyed. Replacement of destroyed trees or shrubs shall be made with new stock conforming to the requirements of the City's Tree Ordinance at the expense of the Contractor, and no separate payment will be made therefor.

Beneath trees within the limits of the excavation, and where possible, pipelines shall be built in short tunnels, except as otherwise shown or specified. When the tree is outside the limits of the excavation but, where the distance from the centerline of the new pipeline to the trunk of any tree is such that, in the opinion of the Engineer, the excavation would result in serious damage to the tree, the pipeline shall be constructed in short tunnel or the root system shall be pruned, as ordered in writing by the Engineer. The Contractor shall be responsible for all damage to trees and shrubs as a result of his operations, whether the pipeline is placed on trench, tunnel, or other excavation.

The Contractor shall provide the services of an approved licensed tree professional when it is necessary to trim or cut a branch from a tree, or for required root pruning. The City's approved arborist shall be present for all activities associated with both grand tree and non-grand trees. The contractor shall trim necessary tree canopies and root prune within excavation areas the trees that are to remain to allow for construction activities with the City's approved arborist present during such activities.

The cost of protection of trees and shrubs, replacement or repair of trees or shrubs destroyed by the Contractor, short tunnels, cutting or trimming of tree branches, and root pruning shall be included in the various classified unit price Contract Items for pipelines, tree and root pruning, or in the total Lump Sum Price, as applicable, and no separate payment will be made therefor.

SP-34 Existing Storm Sewer Facilities

In the course of the work, it will be necessary to perform construction activities under or closely adjacent to existing culverts and other storm sewer facilities. The Contractor shall protect all existing storm sewer facilities which are shown on the Plans or located in the field during the course of the work. When approved by the Engineer, relocation or special maintenance of storm sewer facilities during construction will be permitted. Disruption of service shall be kept to a minimum.

Facilities which are damaged due to the work method of the Contractor shall be replaced by the Contractor to such limits as directed by the Engineer. Materials used for such replacements shall be similar to those used in the existing facility and shall conform to City Standards for the construction of storm sewers for work done in the City of Tampa. Work done outside the City shall conform to the Florida Department of Transportation "Standard Specifications for Road and Bridge Construction."

The cost of protecting, replacing, relocating and maintaining storm sewer facilities shall be included in the various classified unit price Contract Items for pipelines, or in the total Lump Sum Price, as applicable, and no separate payment will be made therefor, unless otherwise specified in other Contract Items.

The maintenance and guarantee provisions of the Agreement shall also apply to all replacements of damaged or relocated storm sewer facilities accomplished by the Contractor.

The contractor shall be responsible for maintaining all existing private and public stormwater drainage connections into the existing stormwater system. All drainage connections shall be maintained and/or restored.

SP-35 Work in Private Property

Where portions of the work are constructed in easements through private properties, the limits of such City-owned easements are as shown on the Plans.

Upon completion of work in City-owned easements, the Contractor shall restore the property, including all fences or other structures disturbed by his operations, as nearly as possible to the condition in which he found it. No material shall be used or removed from private property without the approval of the Engineer.

The Contractor shall confine his operation in such private properties within the limits of the easements as shown or directed by the Engineer.

The Contractor shall further comply with all provisions of the grants of the City-owned easement and shall assume full responsibility as the agent of the City for all obligations of the City under such grants of easement in connection with the construction of pipelines.

The Contractor shall not enter upon or occupy any private land outside of the limits of the City-owned easement unless a copy of the written consent of the Owner is filed with the Engineer. The Contractor shall conduct his operations along easements through private property so as not to damage the property and to interfere with its ordinary use as little as possible.

SP-36 Fences

Temporary fences, where required, shall be "wood and wire fence" or other suitable fencing as approved by the Engineer.

Permanent fences shall be restored by the Contractor and shall be finished and installed so that the restoration is equal to or better than the original. Only those portions of original fencing or materials therefrom, that the Engineer approved for reuse shall be used by the Contractor in fence restoration. All other materials, including lumber, paint, creosote, concrete and metal products, shall be furnished by the Contractor.

The cost of temporary fences and permanent fence restoration shall be included under the various classified unit price Contract Items, or in the total Lump Sum Price, as applicable, and no separate

payment will be made therefor.

SP-37 Data to be Submitted on Pipe

Within ten days after the date the Contractor is issued the Notice to Proceed and prior to his entering into any subcontract for the manufacture or purchase of any pipe, the Contractor shall submit to the Engineer, in an amount equal to four (4) sets to be retained by the City plus the number of sets desired by the Contractor, the following information:

1. The name and address of the pipe manufacturer and the location of the plant at which the pipe will be manufactured.

2. A general description of and specifications for the pipe and pipe joints proposed.

3. Notarized certificates of manufacture for VCP, PVC, HDPE, and DIP stating conformance to applicable standards and specifications.

4. Any additional information that the Engineer may deem necessary in order to evaluate the qualifications of the manufacturer and to determine the suitability of the proposed pipe to meet the requirements of the Contract Documents.

The Contractor shall not enter into any subcontract for the furnishing of pipe until he has received the Engineer's approval, in writing, of the proposed manufacturer and pipe.

All pipes of specified classes and materials shall be of one kind and shall be produced by a single manufacturer.

SP-38 Inspection of Reinforced Concrete Pipe

All reinforced concrete pipes, reinforced concrete arch culverts, storm drain, and sewer pipe, and all reinforced concrete elliptical pipes shall be inspected and accepted by a testing laboratory approved by the Engineer.

Each pipe shall bear the stamp of acceptance of the testing laboratory and the Engineer shall be supplied with a copy of each inspection report, including a certification of "D-load," absorption test, conformance to the dimensional requirements, and all other designations of ASTM specifications. The cost of such inspection services shall be included in the unit prices for the respective pipe items.

Unless specified otherwise on the Plans, or directed by the Engineer, all storm sewer pipes shall be ASTM Class III, B wall thickness.

Prior to the manufacture of any reinforced concrete sewer pipe, details of the steel reinforcing and concrete strength together with proof of the adequacy of the pipe design for each size and class of pipe shall be submitted to the Engineer for approval.

As proof that the design of the pipe meets the 0.01-inch crack and ultimate load strength requirements for this class of pipe, the manufacturer shall submit the results of properly certified three-edge-bearing tests already witnessed and verified by an approved independent testing

laboratory on identical pipe of identical design or, if such three-edge-bearing test results are not already available or are not acceptable, shall have one pipe, at least four feet in length, tested in three- edge-bearing and witnessed and verified by an approved independent testing laboratory and shall submit certified test results. All costs associated with proof-of-design tests shall be borne by the Contractor.

Concrete sewer pipe shall be tested in accordance with the applicable provisions of ASTM Des: C 497 as required by the ASTM Specification for the pipe.

The basis of acceptance for reinforced concrete pipe shall be in accordance with Section 5.1.1 of ASTM Des: C 76 (round pipe) or ASTM Des: C 507 (elliptical pipe). During manufacture, at least one pipe section shall be shop tested to destruction in three-edge-bearing in the presence of an approved independent testing laboratory for each 1,000 feet of pipe or fraction thereof made. The test pipe sections shall be a minimum of four feet in length. The manufacturer shall have a pipe casting form, of the same inside diameter as the pipe being manufactured, together with the proper reinforcing steel cages, available at all times during manufacture for the purpose of casting test pipes at the times designated by the Engineer. Test pipe sections shall not be lined with plastic sheet. No pipe shall be tested at an age of less than 12 days, and no pipe shall be delivered to the job site until satisfactory completion of shop tests on representative pipe specimens for each 1,000-foot lot of pipe manufacturer. Proof-of-design tests performed on pipe manufactured for this Contract will be accepted by the City in lieu of shop tests for the first 1,000- foot lot of pipe of each size and class manufactured. This test must be within one (1) year of shipment for each size and class of pipe.

The basis for acceptance of nonreinforced concrete pipe shall be in accordance with Section 4.1 of ASTM Des: C14

The Contractor shall obtain, review and submit to the Engineer four (4) copies of certified test reports made by the City's inspection engineer. All costs associated with shop testing shall be borne by the Contractor.

SP-39 Elliptical Concrete Pipe and Round Concrete Pipe Joints

All joints in elliptical concrete pipe and round R.C.P. shall be provided with filter fabric or concrete jacket as per Standard Index No. 280 and as directed by the Engineer. Filter fabric shall be provided at all joints, except the last two joints not supported by a structure; these joints shall be provided with a concrete collar.

The cost of the filter fabric jackets and concrete collars shall be included in the unit cost of pipe. No extra payment will be paid for such jackets or collars.

SP-43 Sand-Cement Riprap Bags

Bags made from synthetic fiber or material shall not be used on this project. The preferred bag material is jute.

SP-44 Standard for Filter Fabric

Unless specified otherwise on the Plans, filter fabric shall be nonwoven fabric per D.O.T. Specification Sections 514 and 985. Payment for furnishing and placing the filter fabric shall be included in the contract price for the item or items to which it is incidental.

SP-45 Measurement for Payment

The quantity, in linear feet, to be measured for payment under the various classified unit price Contract Items for pipelines in opencut, or in the total Lump Sum Price. Depth of cut for sanitary sewers shall be measured from the original ground surface to the pipe invert. Pipelines will be measured along the centerline of the pipe as follows:

1. The measured length of gravity sanitary sewers, regardless of pipe material, will include all fittings, short tunnels and manholes with no deductions for wyes, tees and the width of manholes. Deductions in the measured length of gravity sanitary sewers will be made for the width of structures, such as junction boxes, measured from the outside face to the outside face of the structure walls, plus one foot.

2. The measured length for sanitary or stormwater force mains will include all fittings and short tunnels with deductions for the laid length of valves.

3. Deductions in the measured length of storm sewers will be made for the width of all structures, including manholes and inlets, measured from the inside wall to the inside wall of the structure.

SP-46 Filling Abandoned Sanitary and Stormwater Pipes

The Contractor shall pump a lean mixture of grout into stormwater and sanitary sewers as shown on the Plans and as directed by the Engineer.

The grout shall be a mixture of flyash and cement, the ratio of which shall be submitted to the Engineer for approval. The grouting shall be carried out by pumps.

This work shall be carried out after the proposed sanitary sewer or stormwater pipe is in service.

The Contractor shall take measures to ensure the pipe is completely filled with the grout. Such measures may consist of constructing temporary stand pipes, grout injection tubes, or other measures approved by the Engineer and as directed in the Workmanship and Materials section. The Contractor shall also construct approved plugs into the ends of the abandoned sewers. All costs to construct the plugs, stand pipes, grout injection tubes (or other approved measures), and any other necessary steps to provide for a complete item shall be included in the unit cost of the grout, and no additional payment shall be made therefore

SP-47 Sanitary Sewer House Lateral Reconstruction

All sanitary sewer house laterals, in conflict, shall be reconstructed as indicated on the plans and as directed by the Engineer.

SP-48 Temporary Pavement Restoration

No portion of the work shall be left more than fourteen (14) days without temporary pavement surface; however, the Engineer may require that temporary pavement surface be installed sooner to ensure that no more than one-thousand (1000) linear feet of residential roadway be open at one time. Payments on installed pipe of up to fifty percent (50%) of the unit price can be retained by the Engineer until a crushed concrete or limerock base material along with a sand seal temporary pavement surface is provided. The Engineer can restrict further pipe laying if satisfactory and on-going street restoration is not performed by the Contractor. Temporary work shall be maintained in a suitable and safe condition for traffic until the permanent pavement is laid, or until final acceptance of the work.

SP-50 Cut Sheets

The Contractor shall furnish the Engineer with cut sheets for all pipelines installed under this Contract. The cut sheets shall be arranged in a format approved by the Engineer and shall indicate the pipe invert elevation shown on the Plans; the actual, existing ground surface elevation; and the computed cut from ground surface to pipe invert at manholes and at changes in pipe class and bedding class. The cut sheets will be reviewed by the Engineer and shall be revised as necessary by the Contractor to meet the approval of the Engineer.

SP-51 City Testing

The cost of retesting materials and/or workmanship, which has been initially tested by the City and found to be unacceptable, is to be borne by the Contractor.

SP-56 Removal & Abandonment of Ex. Sewer Systems within Pipeline Construction Payment Limits

The cost of removal or abandonment of existing sewer systems within pay limits including, but not limited to, pipe, inlets, manholes, manhole frames and covers, catch basins, and any other appurtenances as well as the cost to grout or sand-fill any pipe or manholes, where specified on the Plans, shall be included under the various classified unit price Contract Items for pipelines, or in the total Lump Sum Price, as applicable, and no separate payment will be made therefore.

Removal or abandonment of existing storm or sanitary sewer systems outside the sewer system pay limits, as shown on the Plans and directed by the Engineer, shall be paid for at the appropriate Contract Unit Price, or in the total Lump Sum Price, as applicable.

SP-59 Monthly Schedules

In addition to the Progress Schedule required in Article 4.02 of the Agreement, the Contractor shall submit a monthly schedule with each pay estimate. Pay estimates will not be processed unless accompanied by an updated monthly schedule per City of Tampa.

SP-61 Replacement of Traffic Markings and Signalization Loops

The Contractor shall furnish all labor, equipment and materials to replace, test and maintain all

traffic markings (temporary and permanent) and signalization loops removed or damaged by pipeline construction and appurtenant work as shown on the Plans, specified and directed by the Engineer.

The replacement of traffic markings (temporary and permanent), signalization loops and all appurtenant work shall be replaced by the Contractor in kind.

It shall be the Contractor's responsibility to field verify before construction begins all markings and signalization loops to be replaced.

All traffic markings and signalization loops shall conform to the Workmanship and Materials standards set forth in the latest edition of the Florida Department of Transportation Standard and Supplemental Specifications.

Payment for the replacement of temporary and permanent traffic markings, signalization loops and all appurtenant work shall be included in the various classified unit price Contract Items, and no separate payment shall be made.

SP-64 Sewer and Stormwater Bypass Pumping

Maintaining sanitary sewer flows and stormwater flows during all phases of construction is the responsibility of the Contractor. The Contractor shall review the plans, phasing, and the construction schedule to determine the need for bypassing to suit the sequence of operations. The bypass operation must provide continuous service. If so directed by the Engineer, the Contractor will provide around-the-clock monitoring to ensure continuous operation and service. To further ensure that no interruptions occur, the Contractor must have adequate back-up pumps on site at all times. The number of back-up pumps shall conform to the following chart:

OPERATING BYPASS PUMPS	REQUIRED BACK-UP PUMPS
1-3	1
4-6	2
7-9	3

The hydraulic design of the bypass system shall be the sole responsibility of the Contractor. All pumps shall be of a type suitable for pumping sanitary and stormwater over an indefinite period without clogging or requiring shutdown for routine maintenance. The Contractor shall submit a complete plan for his bypass system including, but not limited to, pump size and type, pump flow characteristics, and piping size, type, and diameter. All pumps shall be properly secured to avoid damage/vandalism/unauthorized shutdown and baffled to comply with all noise abatement standards. The costs of bypass pumping shall be included in the various Contract Unit Price Items, or in the total Lump Sum Price, as applicable, and no separate payment will be made therefore.

SP-69 New Electric Service

Prior to construction, the City will pay TECO an installation fee for new service, which will be

good for the duration of the contract. Any additional fees required shall be the responsibility of the Contractor.

The installation of the new permanent electrical service as well as any coordination with the City or County electrical inspection and with Tampa Electric Company shall be solely the responsibility of the Contractor. TECO will not perform any work without the following: (1) All fees paid. (2) Inspection by the appropriate electrical department.

SP-72 Request for Information and Shop Drawings

Contractor shall prepare and submit up to four (4) hardcopies and one (1) bookmarked, unsecured electronic post document format (PDF) file for all Submittals, RFI, and Shop Drawings. The City will review the submittals and return one (1) hardcopy and PDF file of the marked up submittal to the contractor. The contractor shall have approved hard copies of all submittals at the job site. Each electronic submission must be in a high resolution color format and shall be original electronic documents from the manufacturer. Hardcopies shall be high quality printed in color. Scanned printouts or poor quality resolution PDF files will not be accepted.

SP-73 Work Directive Change

A Work Directive Change is a written directive to the Contractor, issued on or after the date of the execution of the Agreement, and signed by the Engineer on behalf of the City, ordering an addition, deletion or revision in the work, or responding to an emergency. A Work Directive Change will not change the contract price or the time for completion, but is evidence that the parties expect that the change directed or documented by an Authorization to Proceed with Extra Work letter will be incorporated in a subsequently issued Change Order following negotiations by the parties as to its effect, if any, on the contract price or the time for completion.

Without invalidating the Agreement, additions, deletions or revisions in the work may, at any time or from time to time, be authorized by a Change Order or a Work Directive Change. Upon receipt of any such document, the Contractor shall promptly proceed with the work involved.

SP-85 Storage of Materials

Unless otherwise directed, the Contractor may not use that portion of the right-of-way located between the existing/proposed curb lines or existing/proposed edges of pavement to store pipe, structures, materials, surplus excavated fill, or equipment other than that used for excavating or dewatering. The Contractor may use that portion of the right-of- way behind the existing or proposed curb line or off the edge of pavement for storage provided that this use does not obstruct pedestrian or vehicular traffic and conforms to the City's Tree Ordinance. If the area behind the curb line/off the edge of pavement is insufficient in size to accommodate the Contractor's storage needs, the Contractor is required to secure the use of a vacant parcel of land for use as a storage site for the duration of this project. Upon completion of the project, all storage areas will be restored to a condition which meets or exceeds the pre-construction condition of the storage area. Payment for use and restoration of storage areas will be included in the appropriate lump sum pay items and unless the area is within the pipeline pay limits, no separate payment will be made therefor.

Staging and storage sites are the responsibility of the Contractor to obtain.

SP-86 Temporary Stockpiling

For temporary stockpiling of the excavated material within project limits (and anywhere within City limits), the Contractor shall follow the following procedure:

Public Right-of-Way

a. The Contractor will not be allowed to stockpile suitable, excavated material within right-of-way for a period in excess of 30 calendar days. Unsuitable excavated material shall not be stockpiled within public right-of-way for a period in excess of 7 calendar days.

Location other than Public Right-of-way

b. The Contractor shall:

1) Obtain the permission (in writing) from the owner of the property where stockpiling is desired.

2) At his own expense present the above letter and a contour plan of the site to the Engineer for approval of the stockpiling site.

The time periods of stockpiling shall be specified by the Contractor in writing.

Upon removal of stockpiled material, the Contractor shall clean up and grade the site to its original contours and conditions.

The City of Tampa shall not be a party to the agreement between the Contractor and the property owner.

Regardless of the location of stockpiling, it shall be the Contractor's responsibility to make sure that stockpiling in no way constitutes a public hazard or nuisance and does not interfere with the natural surface runoff in the area.

SP-89 Temporary Work Stoppages

The Contractor shall temporarily discontinue all construction activities from, and including, Thanksgiving Day through the following Sunday, and December 24 through January 2.

Prior to temporary work stoppages, all streets shall be restored to permit access to all businesses and residences and to allow ingress and egress by local traffic only. The Contractor shall maintain all streets at this condition level for the duration of the shutdown period.

All equipment, except that used for excavation and well pointing, and all materials including, but not limited to, manhole structures, pipe, and stockpiled material shall be removed to either the Contractor's storage lot or to a location outside the project area as approved by the Engineer.

The Contractor will also be required to accommodate the annual Gasparilla Parade and Gasparilla Run by ceasing construction activities and providing ingress and egress to allow local traffic only. The time limits for these requirements shall be from one day before to one

day after the Gasparilla Parade and the Gasparilla Run. Accommodation of these events will entail restoration of all streets to at least a sand seal coat of crushed concrete or limerock base. All equipment, except that used for excavation and well pointing, and all materials including, but not limited to, manhole structures, pipe, and stockpiled material shall be removed to either the Contractor's storage lot or to a location outside the project area as approved by the Engineer.

All costs associated with furnishing labor, equipment, temporary pavement restoration, demobilization, mobilization, signage, barricades, clean-up, security, and any other incidentals required to accommodate the Thanksgiving, Christmas and New Years' Holidays and Gasparilla Parade and Race shall be included in the various contract unit prices, and no additional payment shall be made therefor.

SP-92 Project Videotaping

Prior to commencing work, the Contractor shall submit to the Engineer for approval a video file in MP4, or other approved format or a DVD, containing a continuous color video recording including complete coverage of pre-construction conditions of all surface features within the construction's zone of influence, (including detour routes) simultaneously produced audio commentary and electronic display of time and date. The video recording shall be sufficient to fulfill the technical and forensic requirements of the project and provide continuous unedited coverage, establishing locations and viewer orientation with clear, bright, steady and sharp video images with accurate colors free of distortion or other imperfections. The video file or DVD must be accompanied by a detailed log of its contents including date, time, locations, and observed features. No work shall be allowed until the completed video file or DVD and log are approved by the Engineer.

SP-95 Reconstruction of Swales

This contract consists of areas where existing ditches or swales shall be regraded according to the typical section and design as indicated on the Plans.

The Contractor may be required to fill existing ditches or swales as per designed elevations. The Contractor is to use excavated, suitable material from the work site first before importing suitable fill material.

The cost of ditch or swale reconstruction including all material, labor, equipment, etc., to complete the job, excluding the cost of sodding, shall be included under the various classified unit price items, or in the total Lump Sum Price, as applicable, and no additional payment shall be made therefor.

SP-104 Castings Identification

All casting covers, such as for inlets and manholes, shall bear the appropriate City of Tampa identification for stormwater pipe and for sanitary sewers, as shown on the Plans and directed by the Engineer per the city of Tampa Stormwater Technical Specification and Details.

SP-105 Rubble Riprap

Rubble riprap shall be placed against the embankment or other work to be protected in conformity with the specifications, lines, grades, dimensions, and notes shown in the Plans.

Rubble riprap shall consist of broken concrete or of broken stone. The material shall be sound and durable, with specific gravity of at least 1.90. It shall be free of cracks, soft seams, and other structural defects. The pieces shall be roughly angular and shall be reasonably free from thin, flat, or elongated pieces.

The cost of rubble riprap shall include all material, filter fabric underlayment, labor, equipment, etc., to complete the job, and shall be included under the various classified unit price items, or in the total Lump Sum Price, as applicable, and no additional payment shall be made therefor.

SP-109 Existing Sprinkler System

Existing sprinkler systems for lawns and/or shrubbery within the City right-of-way shall be protected or, if disturbed, replaced by the Contractor. All sprinkler systems shall be replaced with those of equal or better quality as approved by the Engineer. The replacement of sprinkler systems shall include all necessary parts, labor, equipment, etc., to complete the existing sprinkler system in operating condition.

In areas where the construction might be in close proximity to existing sprinkler systems, the Contractor shall limit his trench width by using a trench/drag box, at no additional expense to the City. The allowable width of the construction area around existing sprinkler systems shall be as per the detail for sheeted (trench/drag box) trench plus 4 feet for a working area, to either side of the sheeted trench.

All costs associated with any sprinkler system repaired or replaced within the described construction area shall be included in the various unit price items and no additional payment shall be made, thereof unless the plan specifically allows for the irrigation system to be replaced or noted and contract line items are in the work order.

SP-112 Removal of Existing Pavement

The Contractor shall remove existing pavement and additional excavated material required for proposed pavement grade as indicated on the Plans and as directed by the Engineer.

The removal of existing pavement shall include the regrading of the shoulder, etc., as indicated on the Plans.

The cost of existing pavement removal and additional dirt removal including all labor, equipment, etc., to complete the job shall be included under the various classified unit price items, or in the total Lump Sum Price, as applicable, and no additional payment shall be made therefor.

SP-122 Foundation Rock (#57)

The Contractor shall also provide 2-foot thick foundation rock fully wrapped with filter fabric under all manholes and inlets of this project. The filter fabric shall be included in the price of rock, and no additional payment shall be made. Where found necessary, the Engineer has the right to increase foundation rock with filter fabric at the same unit bid price.

SP-129 As-Built Plans

The Contractor shall provide the Engineer with "As-Built" plans, as follows:

1. All As-Built information shall be annotated by a Florida Registered Professional Surveyor and Mapper on a separate layer of each AutoCAD drawing file as provided on a disk by the City. Annotation of the new drawing files shall be in accordance with City of Tampa Department of Transportation and Stormwater Services drafting standards, as well as the Standards of Practice / Minimum Technical Standards set forth by the Florida Board of Professional Surveyors and Mappers in Chapter 5J-17, Florida Administrative Code, pursuant to Section 472.027, Florida Statutes. Settings shall be as follows: Color: CYAN, Line Type: CONTINUOUS, Font: ROMANS, Layer Name: AS-BUILT, AutoCAD Menu Name: ACAD.MNU, and File Format: AUTOCAD latest version.

2. All surveys shall be completed and certified by a Florida Registered Professional Surveyor and Mapper hired and/or employed by the Contractor, and shall be in accordance with the Standards of Practice / Minimum Technical Standards set forth by the Florida Board of Professional Surveyors and Mappers in Chapter 5J-17, Florida Administrative Code, pursuant to Section 472.027, Florida Statutes. Survey data shall be submitted as an electronic data file in AutoCAD latest version. The Contractor shall also include as supporting data the ASCII files of digital raw survey data, closure reports, adjustment reports, and/or copies of any hand written field notes or sketches.

3. "As-Built", or "Record", surveys, as may be required by contract, or agreement, shall consist of survey data collected on all constructed improvements, so they may be compared to and contrasted with the design plans and/or construction drawings. The annotated disk shall delineate all changes and deviations to the planned improvements within the project limits, to include, but not be limited to, pavement, curb & gutter, sidewalk, driveways, inlets, manholes, all piping, inverts, ditches, ponds, valves, hydrants, water meters, signalization, hand holes, signing & pavement marking, landscaping, and irrigation. All changes and deviations shall be delineated by Station-Offset and vertical alignment values (or in the same format as depicted on the construction plans) and shall be clearly shown on the drawing files.

4. The Contractor shall comply with the above requirements and shall submit one check print set of the plans at the same scale as the construction plans, and all the supporting survey data files, to the Engineer for review within three weeks of substantial completion of the project. Final payment for the project shall not be made until the As-Built information is received for review, any corrections are made, and approval granted by the Engineer. Upon approval, the Contractor shall provide the final As-Built drawings on the disk, at the same scale as the construction plans. These files shall be AutoCAD Drawings and Adobe PDF. One signed and sealed paper copy shall be sent to the Department of Transportation and Stormwater Services, Engineering Division.

The cost for this work shall be included in the contract price for Mobilization and no separate payment shall be made for meeting the above As-Built requirements.

SP-130 SAFETY:

A.Responsibility: Employees shall immediately report any unsafe work practice or unsafe condition to their supervisor(s). The Contractor is solely responsible for the safety of its workers, and shall comply with all applicable requirements [i.e.: 29 CFR 1910 -Occupational Safety and Health Standards, 29 CFR 1926 - Safety and Health Regulations for Construction,

etc.] and industry safety standards while at the work site. The fact that City personnel may bring un-safe conditions to the attention of any member of the Contractor's work force does not relieve the Contractor of this responsibility.

All Contractors' employees and sub-contractors should be given a copy of SP-130.

The Contractor shall have a designated Safety Officer within its organization. At the Pre-Construction meeting, the Contractor shall provide the name and contact information of the Safety Officer to the Engineer.

At the Pre-Construction meeting, the Contractor will be given pertinent safety related information, necessary forms and instructions that pertain to any work that might be utilized during the contract. The Contractor shall be responsible to disseminate that information to its employees and sub-contractors. Special care shall be taken by the Contractor to ensure that any new employee or sub-contractor to the work site shall be briefed on these safety instructions.

If warranted by the project and directed by the Engineer, the Contractor shall develop and implement a comprehensive health and safety plan for its employees that will cover all aspects of onsite construction operations and activities associated with the Contract. This plan must comply with all applicable health and safety regulations and any project specific requirements specified in the Contract.

B. Incident Reporting: All accidents that result in personal injury, illness or property damage shall be immediately reported and investigated, regardless of the extent of injury, illness or property damage. Employees must report accidents within one hour (or as soon as practical) from the time of occurrence to their immediate supervisor, who in turn will report it to the City's inspector. The City inspector will record the incident in the daily report and report it to the Risk Management Division (274-5708).

C. Air-Borne Debris: All personnel in proximity to drilling, sawing, sanding, scraping, spraying, power-washing or other work being done, either in enclosed spaces or in the open, that creates dust or air-borne debris shall wear eye protection [29 CFR 1910.133] and a respirator [29 CFR 1910.134].

D.Confined Spaces: OSHA defines a confined space as having limited or restricted means for entry or exit, and is not designed for continuous employee occupancy. Confined spaces include, but are not limited, to vaults, tanks, manholes, wet-wells, pipelines, utility tunnels, etc.
The Contractor shall take measures [29 CFR 1910.146 (c)(5)] to ensure that atmospheric conditions in confined spaces are not hazardous to occupants. This can be accomplished by forcing a sufficient amount of clean air through the confined space and testing the atmosphere by using a portable certified, calibrated, atmosphere monitor that meets OSHA requirements [29 CFR 1910.146(c)(5)(ii)(C)]. The atmosphere monitor should record oxygen content, flammable gases and vapors and toxic air contaminants, such as the Industrial Scientific TMX-412.

E.Trench Safety: Any excavation deeper than four (4) feet shall adhere to the requirements contained in 29 CFR 1926.650 thru 652 and the Florida Trench Safety Act [Florida Statutes, ss 553.60 - 553.64].

F.Open Flames: No fires shall be allowed. No open flames necessary for any construction activity shall ever be left un-attended. A current, portable, fully charged fire extinguisher shall be located with each activity requiring an open flame.

G.Sparks: Any activity lasting more than 10 continuous minutes that creates sparks, such as grinding or chipping, shall have a dedicated fire watch in attendance. A current, portable, fully charged fire extinguisher shall be located with each activity creating sparks, regardless if a fire watch is required or not.

H.First Aid: The Contractor shall furnish appropriate First Aid Kits [29 CFR 1910.151] and shall be responsible to ensure its employees are properly trained to render first aid. If injurious corrosive materials are to be utilized, eyewash and body wash facilities must be provided in the immediate area.

I. Related Costs: All costs associated with these, or any safety measures shall be included in the total lump sum contract price or the various contract item unit prices, as applicable, and no separate payment shall be made therefor.

SP-137 Post-installation Testing of PVC Gravity Pipe

In accordance with the provisions of Workmanship and Materials Section 11 – PVC Pipe Gravity, subsection W- 11.07, all PVC pipelines shall be leakage tested, deflection tested, and T.V. inspected prior to final acceptance of the project. The Contractor shall be responsible for performing all tests and inspections on the pipeline. The City will no longer perform the T.V. inspection.

In the instance of a “point repair” the requirements to leakage test, deflection test and/or perform a TV inspection will not be required. A point repair in a gravity line is defined as replacing any distance of sewer pipe, but not the entire length of pipe, between manholes. If the entire length of pipe between manholes is replaced the leakage test, deflection test and TV inspection will be required. A point repair in a force main is defined as replacing a length of up to two contiguous nominal sections of pipe.

All costs associated with pipeline testing and TV inspection shall be included in the various contract unit prices, and no separate payment will be made therefore.

SCHEDULE A, B, D - CONTRACT PAY ITEMS

C1.00 - Contingency

Contingency funds shall be disbursed at the discretion of the Engineer. No contingency funds shall be disbursed if there are no contingent items.

Item No.	Description	Unit
100	Contingency	LS

C1.01 - Mobilization

The Contractor shall furnish all equipment, labor, and materials necessary to mobilize his forces as necessary to perform all the work under this Contract.

Work under this section includes bonding and insurance; transportation, and otherwise movement of all personnel, equipment, supplies, materials and incidentals to the project site; establishment of temporary offices, buildings, safety equipment and first aid supplies, sanitary and other facilities; and all other preconstruction expense necessary for the start of the work, excluding the cost of construction materials, to be constructed under this Contract as shown on the Plans and directed by the Engineer.

Payment for Mobilization will be made at the appropriate Contract Unit Price per 5% of the Work Order.

Item No.	Description	Unit
101	Mobilization – 5% of work order	LS

C1.02– Maintenance of Traffic

The Contractor shall furnish all materials, equipment, and labor to establish and maintain all traffic maintenance devices and personnel as shown on the Plans, specified, and directed by the Engineer.

The work includes installation of all signs, video and photographic preconstruction pictures, structural testing, barricades, lights and flagmen, additional earth excavation, selected fill, temporary wearing surface, temporary bridges, temporary ADA paths, roadway closures and requirements, as-built survey and all appurtenant work complete in place as necessary to control traffic and provide for safety to the public, all in compliance with the Manual on Uniform Traffic Control Devices, "MUTCD," with subsequent revisions and additions, and to the satisfaction of the Engineer. MOT direction shall conform to project Plans and Specific Provisions. Contractor shall provide metal walkways for pedestrian access from on-street parking to residential homes during street closures.

The Contractor will be required to have a licensed Professional Engineer sign and seal a Maintenance of Traffic Plan to the City's Right-of-Way Department for permit.

Payment for Maintenance of Traffic will be made at the appropriate Contract Unit Price per 8% of the Work Order.

Item No.	Description	Unit
102	Maintenance of Traffic – 8% of work order	LS

C1.04 – SILT FENCE & EROSION CONTROL, Soil Tracking, Inlet Protection System

The Contractor shall furnish all materials, equipment, and labor to establish and maintain all sediment barriers as shown on the Plans, specified, and directed by the Engineer.

Work in this Contract Item includes, but is not limited to, synthetic bales, staked silt fence, and turbidity barrier as specified on the Plans or directed by the Engineer. The sediment barriers shall conform to the latest version of the FDOT Standard Specifications – Workmanship and Materials Section 104 – Prevention, Control, and Abatement of Erosion and Water Pollution and City of Tampa Specifications – SP-19. The City of Tampa Specification SP-19 shall take precedence.

Payment for Silt Sediment Barriers will be made at the Contract Linear Foot (LF) Price and Per Each prevention/protection system installed, respectively.

Item No.	Description	Unit
104	Silt Fence and Erosion Control	LF
104.15	Prevention Device Soil Tracking	EA
104.18	Inlet Protection System	EA

C1.051 –ROOT PRUNING

The Contractor shall furnish and install all labor, materials, services, permitting, public noticing, equipment and appurtenances to prune trees and tree roots of both grand trees and non-grand trees within the limits of construction as shown in the Contract Drawings and properly dispose of material off site.

The work includes, but is not limited to, the following: removal of stumps and brush, pruning of trees and brush, prune the roots of trees and the removal of any undesirable material within the limits of construction as shown in the Contract Drawings. All pruning of trees and roots must be done under the direction of a City Approved Certified Arborist and in coordination with Planning and Development, Natural Resource Division.

Root pruning shall conform to the requirements of the City of Tampa Workmanship and Materials Section 105 – Root Pruning.

Payment for the Root Pruning will be made at the appropriate Contract Unit Price per linear foot (LF).

Item No.	Description	Unit
105.1	Root Pruning	LF

C1.052 - TREE REMOVAL

The Contractor shall furnish and install all labor, materials, services, permitting, public noticing, equipment and appurtenances to remove existing grand trees and non-grand trees within the limits of construction as shown in the Contract Drawings for removal and properly dispose of material off site.

The work includes, but is not limited to, the following: removal of stumps and brush and the removal of any undesirable material within the limits of construction as shown in the Contract Drawings. All tree removal shall be done via hand methods with chainsaw and a rubber tire skid steer to prevent an impact to adjacent trees, properties, structures, and shall conform to the City of Tampa Natural Resources Chapter 13.

Payment for the Tree Removal will be made at the appropriate Contract Unit Price per Each (EA).

Item No.	Description	Unit
105.2A	Tree Removal – 4”-8” dbh	EA
105.2B	Tree Removal – 9”-18” dbh	EA
105.2C	Tree Removal – 19”-24” dbh	EA
105.2D	Tree Removal – 25”-36” dbh	EA

C1.101 - CLEARING AND GRUBBING POND SITE

The Contractor shall furnish all materials, equipment, and labor for clearing and grubbing as shown on the Plans, specified, and directed by the Engineer.

Work in this Contract Item includes, but is not limited to, removal and disposal of stumps, roots, concrete, building structures, fencing, pavement, and tree protection, as specified on the Plans.

Clearing and Grubbing shall conform to Section 110 – Clearing and Grubbing of the Specifications. Disposal of debris shall conform to the City Standard Specifications for Workmanship and Materials Section 113 – Disposal of Debris.

Payment for Clearing and Grubbing will be made at the Contract Unit Price per each - Acre

Item No.	Description	Unit
110.1	Clearing and Grubbing Pond Site	AC

C1.103– GROUTING OF EXISTING STORM PIPE

The Contractor shall furnish and install all labor, materials, services, equipment and appurtenances to access pipe at both ends, plug, grout and abandon the existing stormpipes that are located in the project area which may include areas outside the limits of new construction as shown on the plans specified and directed by the Engineer.

The work includes, but is not limited to, the following: grouting and abandonment of existing stormpipe in the project area which may include areas outside the limits of the new construction of pipe areas as shown in the Contract Drawings.

Grouting shall conform to the FDOT Workmanship and Materials Section 121 – Flowable Fill.

Payment for the grouting and abandonment of Existing Storm Pipe will be made at the appropriate Contract Unit Price per cubic yard (CY).

Item No.	Description	Unit
110.3	Grout existing stormwater pipe lateral	CY

C1.20 – EXCAVATION AND REMOVAL OF SOIL

The Contractor shall furnish all materials, equipment, and labor for excavation shown on the Plans, specified, and directed by the Engineer.

Work in this Contract Item includes the excavation required as shown on the Plans. The work also includes all necessary grading, testing, backfilling, sheeting, shoring, bracing, temporary ramps, construction fencing, dewatering, regrading of excavated soil per grading plans, disposal of surplus excavated material, and protection of adjacent facilities, and all appurtenant work, complete and in place.

The work shall conform to the City of Tampa Standard Specifications – Workmanship and Materials Section 1 – Excavation – Earth and Rock and Section 108- Dewatering.

The Contractor shall refer to the latest version of FDOT Workmanship and Materials Section 120 – Excavation and Embankment.

Disposal of unsuitable materials shall conform to the requirements of the City Standard Specifications for Workmanship and Materials Section 113 – Disposal of Debris and Section 108- Dewatering.

Payment for Excavation will be made at the Contract Item Unit Price per Cubic Yard (CY) of soil material excavated per truck load.

Item No.	Description	Unit
120	Regular subsoil excavation	CY

C1.30 CLEAN FILL MATERIAL - SAND

The Contractor shall furnish, from sources other than excavations made in the Contract, transport, place, and compact select sand as ordered by the Engineer in writing and not specifically included under other Contract Items. The work also includes disposal of surplus excavated material and all labor and equipment. Select sand shall be as defined under Workmanship and Materials Section 2 – Backfilling.

The work does not include transporting, placing, and compacting approved surplus sand from excavations made in this Contract. The Contractor shall use all such approved surplus sand available from excavations made in this Contract prior to supplying select sand from other sources.

The quantities of Select Clean Fill Material - Sand, obtained from sources other than excavations in this Contract, in cubic yards, to be measured for payment will be the actual compacted volume of select sand placed within the payment limits shown on the Plans or established by the Engineer.

Select sand used to fill voids resulting from unauthorized excavation, or where required for dewatering, will not be measured for payment even though their use is ordered by the Engineer.

Payment for Select Fill Material - Sand, ordered by the Engineer in writing, will be made at the Contract Unit Price per cubic yard of sand fill material.

No payment will be made under this Contract Item for approved surplus sand obtained from excavations made in this Contract.

Item No.	Description	Unit
130	Clean Fill	CY

C1.35 DITCH GRADING

The Contractor shall furnish all materials, equipment, and labor for ditch cleaning shown on the Plans, specified, and directed by the Engineer.

Work in this Contract Item includes the excavation required as shown on the Plans. The work also includes all necessary grading, testing, backfilling, sheeting, shoring, bracing, temporary ramps, construction fencing, dewatering, regrading of excavated soil per grading plans, disposal of surplus excavated material, and protection of adjacent facilities, and all appurtenant work, complete and in place.

The work shall conform to the City of Tampa Standard Specifications – Workmanship and Materials Section 1 – Excavation – Earth and Rock and Section 108- Dewatering.

The Contractor shall refer to the latest version of FDOT Workmanship and Materials Section 120 – Excavation and Embankment.

Disposal of unsuitable materials shall conform to the requirements of the City Standard Specifications for Workmanship and Materials Section 113 – Disposal of Debris and Section 108- Dewatering.

Payment for Ditch Grading will be made at the Contract Item Unit Price per Linear Foot (LF) of material excavated soil.

Item No.	Description	Unit
135	Ditch Grading	LF

C1.60 –STABILIZATION

The Contractor shall furnish all materials, equipment, and labor for the required stabilization shown on the Plans, specified, and directed by the Engineer.

Items included in this Contract Item include, but are not limited to, the material, equipment and labor necessary to stabilize designated portions of the roadbed to provide a firm and unyielding subgrade, having the required bearing value specified in the Plans. Contractor to perform work in accordance with an approved Quality Control Plan meeting the requirements of FDOT Specifications for Workmanship and Materials Section 160- Stabilizing.

Restoration of City Streets shall conform to the requirements of the City Standard Specifications for Workmanship and Materials Section 16 – Restoration of Street Pavements. The City of Tampa performs all compaction and stabilization testing.

Payment for Type B Stabilization will be made at the appropriate Contract Square Yard (SY) Price.

Item No.	Description	Unit
160	Stabilization – LBR 40 subbase	SY

S2.85 – OPTIONAL BASE, CRUSHED CONCRETE

The Contractor shall furnish all materials, equipment, and labor for the required installation of base material shown on the Plans, specified, and directed by the Engineer.

Items included in this Contract Item include, but are not limited to, the material, equipment and labor necessary to construct a base course composed of one of the optional materials as specified on the Plans and shall conform to the latest version of the FDOT Standard Specifications – Workmanship and Materials Section 285 – Optional Base and Section 200- Rock Base.

Restoration of City Streets shall conform to the requirements of the City Standard Specifications for Workmanship and Materials Section 16 – Restoration of Street Pavements.

Payment for Optional Base will be made at the appropriate Contract Square Yard (CY) Price Crushed Concrete, Cubic Yards (CY), respectively.

Item No.	Description	Unit
285	Crushed concrete base	CY
285.706	Base Option (Base Group 06)	SY

C3.27 – MILL EXISTING ASPHALT PAVEMENT IN 1-IN INCREMENTS AND LEVELING

The Contractor shall furnish all labor, equipment and materials to mill existing asphalt pavement as shown on the Plans, specified, and directed by the Engineer.

The workmanship and method shall be as described in the latest FDOT Standard Specifications for Road and Bridge Construction book, Section 327, Milling of Existing Asphalt Pavements.

Restoration of City Streets shall conform to the requirements of the City Standard Specifications for Workmanship and Materials Section 16 – Restoration of Street Pavements.

The quantity of mill Existing Asphalt Pavement to be measured for payment will be the actual area of asphalt pavement milled, shown in the Plans or as specified and ordered by the Engineer.

Core sample testing will be supplied by the City of Tampa for all milling areas. If none are available, the contractor will assume that depth of the milling locations will be above the base material.

Payment for Mill Existing Asphalt Pavement will be made at the Contract Item Unit Price per square yard per inch (SY/IN) of asphalt pavement milled.

Item No.	Description	Unit
327	Mechanical milling 1-in increments	SY/IN

C3.34 - SUPERPAVE ASPHALTIC CONCRETE, TRAFFIC B AND C

The Contractor shall furnish all materials, equipment, and labor for the required installation of asphalt material shown on the Plans, specified, and directed by the Engineer.

Items included in this Contract Item include, but are not limited to, the material, equipment and labor necessary to construct a Superpave Asphalt Concrete pavement with the type of mixture specified on the Plans and shall conform to the latest version of the FDOT Standard Specifications – Workmanship and Materials Section 334 – Superpave Asphaltic Concrete.

Restoration of City Streets shall conform to the requirements of the City Standard Specifications for Workmanship and Materials Section 16 – Restoration of Street Pavements.

Payment for Superpave Asphaltic Concrete, Traffic B and C will be made at the appropriate Contract Ton (TN) Price.

Item No.	Description	Unit
334	Superpave Asphaltic Concrete, Traffic B	TN
334.113	Superpave Asphaltic Concrete, Traffic C	TN

C3.37 - TRAFFIC B FC-9.5 (RUBBER)

The Contractor shall furnish all materials, equipment, and labor for the required installation of friction course asphalt material shown on the Plans, specified, and directed by the Engineer.

Items included in this Contract Item include, but are not limited to, the material, equipment and labor necessary to construct a Friction Course Asphalt Concrete pavement with the type of mixture specified on the Plans and shall conform to the latest version of the FDOT Standard Specifications – Workmanship and Materials Section 337 –Asphaltic Concrete Friction Courses.

Restoration of City Streets shall conform to the requirements of the City Standard Specifications for Workmanship and Materials Section 16 – Restoration of Street Pavements.

Payment for Traffic B FC-9.5 (Rubber) will be made at the appropriate Contract Item Unit Price per square yard per inch (SY/IN) of asphalt pavement.

Item No.	Description	Unit
337	Superpave asphaltic concrete, FC9.5 per inch	SY/IN

C4.0 –STORMWATER HEADWALL

The Contractor shall furnish all labor, materials, and equipment necessary to install and maintain concrete headwall and wing wall, including footing, anchors, and drainage system around existing concrete box culvert as shown on the Contract Plans, or as specified and directed by the Engineer.

Concrete structures shall conform to the requirements of the latest FDOT Standard Specifications - Workmanship and Materials Section 400 – Concrete Structure and the details denoted on the Contract Plans.

The work includes all excavation and backfilling for the structure, sheeting, shoring, bracing, the disposal of surplus material, formwork, supply of necessary material, and the placing of all reinforcing steel, inlets, gratings, manholes, frames, and covers and any other necessary fittings, and connections of pipe, inlets and manhole, and providing plugs and openings in existing structures as shown in the Plans or as directed by the Engineer.

The quantities to be paid for specifically under this Section shall be the plan quantity per eachfor the Concrete Structures satisfactorily completed and accepted, in conformance with these specifications, lines, grade and stationing shown in the Plans. No additional measurement or other allowances will be made for work or materials, for forms, bracing, concrete, reinforcing steel, accessories, etc., used for construction of Concrete Structures.

The quantities, determined as provided above, shall be paid for at the Contract Item Unit Price per each basis for the Concrete Structures as shown on the proposal. All other headwalls will be paid under “Concrete Work” pay items as a cubic yard (CY).

Payment for Box Culvert Headwall will be made at the appropriate Contract Item Unit Price each (EA).

Item No.	Description	Unit
400	Stormwater headwall for a 12”x18” ERCP	EA

C4.25 – STORMWATER INLETS, MANHOLES, AND JUNCTION BOXES

The Contractor shall furnish all materials and equipment, test, construct, install, reconstruct, and maintain the stormwater inlets, stormwater manholes and stormwater junction boxes as shown on the Plans, specified, and directed by the Engineer.

Stormwater inlets, manholes, and City Manholes shall conform to the City of Tampa Stormwater Details and Workmanship and Materials Section 425 – Stormwater Inlets, Manholes and Junctions Boxes and FDOT Index 200 – Manholes. Manhole frames and covers shall conform to the City of Tampa standards.

The work includes all testing, excavation, backfilling, limestone screenings, bedding, sheeting, shoring, bracing, dewatering, formwork, castings, brickwork, adjusting structures, removal of pavement, sidewalks, curb and curb gutter, concrete work and reinforcing, all inlet and outlet pipe, making all pipe connections, setting pipe stubs and plugs for future connections, nonpermanent and special temporary pavement replacement, disposal of surplus excavated material, and protection of adjacent facilities, and all appurtenant work, complete and in place.

Not included in the work are additional earth excavation and additional select fill material which, if ordered or specified, will be included for payment under other Contract items.

The number of Inlets, Manholes, and Junction Boxes to be measured for payment will be the actual number of such structures installed in the work.

Payment for Inlets, Manholes, and Junction Boxes will be made at the appropriate Contract Item Unit Price per Each (EA).

Item No.	Description	Unit
425.1	Inlet, Grate Type E, <10' (FDOT)	EA
425.2	Stormwater manhole, P-7, <10' deep (3.5'x3.5') (FDOT)	EA
425.3	Stormwater manhole, J-7, <10' deep (4'x4') (FDOT)	EA
425.4	Inlet, City of Tampa, curb type 1, <10'	EA
425.5	Inlet, City of Tampa, curb type 2, <10'	EA
425.6	Inlet, City of Tampa, curb type 3, <10'	EA
425.7	Inlet, City of Tampa, curb type BR-1, <10'	EA
425.8	Inlet, City of Tampa, curb type T, <10'	EA

C4.3 – PIPE CULVERTS AND STORM SEWERS

Under the respective Contract Items for Pipe Culverts and Storm Sewers, the Contractor shall furnish all materials and equipment, construct, test, and maintain complete all pipe culverts and storm sewers as shown on the Plans, specified, and directed by the Engineer.

All pipe culverts and storm sewers, including fittings, shall be manufactured and installed in accordance with the City of Tampa Standard Specifications – Workmanship and Materials Section 430 – Pipe Culverts and Section 108- Dewatering.

The work includes all removal of sidewalks, driveways, curbs, curb and gutter, existing storm sewer systems, and permanent pavement; video inspection, excavation, short tunnels, backfill, sheeting, shoring, bracing, dewatering, pipe bedding, pipe fittings, pipe work, making all pipe connections, flared and mitered end sections, standard pipe cradles and encasements shown on the Plans, anchors, sealants, jackets and coupling bands, installation and removal of plugs and bulkheads, testing, special temporary and nonpermanent pavement replacement, protection, repair and replacement of utilities and house

services, maintenance of traffic including maintaining access across driveways along the line of the work, protection, trimming and replacement of trees and shrubs, protection, repair and replacement of existing culverts and other storm sewerage facilities and all utilities, reconstruction or regrading of road shoulders and ditches, disposal of surplus excavated material, protection of existing structures, making joints in protective plastic lining between pipes and between pipes and manholes or structures and all other work incidental to the installation of all pipe culverts and storm sewers complete in place.

The work does not include rock excavation, manholes, junction chamber, surface restoration comprising lawn or permanent pavement replacement, additional earth excavation or additional selected fill material, short tunnels and driveway, sidewalk and curb and curb gutter replacement. When shown on the Plans or ordered, such work will be paid for under other appropriate Contract Items.

The quantity of storm sewer pipe, in linear feet, to be measured for payment shall be the actual length of new pipelines placed in the work, as shown, specified and directed. Pipelines will be measured along the centerline of the pipe.

Deductions in the measured length of storm sewers will be made for the width of all structures, including manholes and inlets, measured from the inside wall to the inside wall of the structure.

Payment for Pipe Culverts and Storm Sewers will be made at the appropriate Contract Item Unit Price per linear foot (LF) of pipe installed.

Payment for structures will be made at the appropriate Contract Item Unit Price per each installed along the pipeline.

Item No.	Description	Unit
430.1	18” Round Stormwater pipe (RCP)	LF
430.2	24” Round Stormwater pipe (RCP)	LF
430.3	24” Round Stormwater pipe (RCP) (CLIV)	LF
430.4	12”x18” Elliptical Stormwater pipe (ERCP)	LF
430.5	14”x23” Elliptical Stormwater pipe (ERCP)	LF
430.6	19”x30” Elliptical Stormwater pipe (ERCP)	LF
430.7	19”x30” Elliptical Stormwater pipe (ERCP)(CLIV)	LF
430.9	12”x18” Mitered end section	EA
430.11	19”x30” Mitered end section	EA
430.12	Connect stormwater pipe to existing structure	EA
430.13	Removal of existing stormwater structure	EA

C4.36 – TRENCH DRAINS

The Contractor shall furnish all materials, equipment, and labor to construct trench drains systems as shown on the Plans, specified, and directed by the Engineer. Trench drains shall be ACO, Zurn, ABT or equivalent.

Trench Drains shall conform to the requirements of the City of Tampa standards specifications - Workmanship, Materials and Technical Specifications Section 436 – Trench Drains.

The work includes all testing, excavation, backfilling, bedding, sheeting, shoring, bracing, dewatering, adjustment of structures, all inlet and outlet pipe, making all pipe connections, disposal of surplus excavated material, protection of adjacent facilities, headwalls and mitered end sections, and all appurtenant work, complete and in place.

The number of trench drains to be measured for payment will be the linear foot of trench drain installed for the work.

Payment for Trench Drains will be made at the Contract Item Unit Price per linear foot (LF).

Item No.	Description	Unit
436	12” trench drain	LF

C5.20 – PERMANENT CURB AND GUTTER REPLACEMENT

The Contractor shall furnish all labor, equipment, and materials to construct and maintain all permanent concrete, bituminous, and granite curb or curb and gutter, and Miami gutter, removed or damaged by pipeline construction and appurtenant work as shown on the Plans, specified, and directed by the Engineer.

All concrete work under this series shall conform to the latest FDOT Standard Specifications – Workmanship and Materials Section 346 - Portland Cement Concrete (except 346.6.1).

The work includes all excavation, filling, shaping, grading, base material, compaction of stabilization subbase, and lawn replacement incidental to curb, or curb and gutter replacement, Miami gutter, and other appurtenant work complete in place.

The length of Permanent Curb and Gutter Replacement to be measured for payment will be the actual length of gutter placed in the work within payment limits for surface restoration shown on the Plans, or ordered by the Engineer.

Payment limits for Permanent Curb and Gutter Replacement along pipelines shall include removal and replacement of gutter incidental to construction of manholes and structures. All curb and gutter removed or damaged and requiring replacement outside payment limits will not be measured for payment and shall be replaced by the Contractor at his own expense.

Payment of Permanent Curb and Gutter Replacement will be made at the Contract Item Unit Price per linear foot (LF) of curb and gutter placed.

Item No.	Description	Unit
520.110	Concrete curb and gutter, type F	LF
520.6	Concrete curb and gutter, type D	LF

C5.22 - PERMANENT SIDEWALK/DRIVEWAY REPLACEMENT

The Contractor shall furnish all labor, equipment, and materials to replace and maintain all permanent sidewalks, driveways removed or damaged by pipeline construction, and appurtenant work as shown on the Plans, specified, and directed by the Engineer.

Permanent sidewalk/driveway replacement shall conform to the requirements of the City of Tampa Standard Specification for Workmanship and Materials Section 16 - Restoration of Street Pavements.

Replacement of architectural pavers shall also conform to the latest version of the FDOT Standard Specification – Workmanship and Materials Section 526 – Architectural Pavers.

Concrete work under this series shall conform to the latest version of the FDOT Standard Specification – Workmanship and Materials Section 346 – Portland Cement Concrete.

The work includes all excavation, filling, shaping, grading, temporary limestone surface, base material, paved surface, architectural pavers, lawn replacement incidental to sidewalk/driveway, and other appurtenant work complete in place.

The quantity of Permanent Sidewalk/Driveway Replacement to be measured for payment will be the actual area of permanent sidewalk/driveway surface placed in the work within payment limits and ordered by the Engineer.

Payment limits for permanent sidewalk/driveway replacement along pipelines shall include removal and replacement of sidewalk/driveway surface incidental to construction of manholes and structures. All sidewalk/driveway surface removed or damaged outside payment limits will not be measured for payment and shall be replaced by the Contractor at his own expense.

Where the existing sidewalk/driveway surface is a nonpermanent type consisting of shell, gravel, limerock, crushed stone, or other similar material, no payment will be allowed for replacement of permanent sidewalk/driveway surface. Replacement of surface for such nonpermanent sidewalk/driveway surfaces will be included in the various classified unit price Contract Items for pipelines or considered under the provisions for "Extra Work."

Payment for Permanent Sidewalk/Driveway Replacement will be made at the Contract Item Unit Price per square yard (SY) of sidewalk/driveway replaced, restored, or removed/replaced.

Item No.	Description	Unit
522.1	Concrete sidewalk, 4” thick (3000 psi)	SY
522.2	Concrete sidewalk, 6” thick – driveways (3000 psi)	SY

C5.50 – FENCING, ALUMINUM

The Contractor shall furnish all labor, equipment and materials to remove and reset aluminum fencing as shown on the Plans and as directed by the Engineer.

The work includes all labor, equipment, and materials necessary to remove and reset aluminum fencing, new 6’ wood or chainlink fencing, gates to the dimensions, and limits, as indicated on the Plans.

Fencing, Aluminum or wood shall conform to the requirements of the latest version of the FDOT Standard Specifications – Workmanship and Materials Section 550 – Chain Link Fencing and Wood fence Repair or Replacement.

Payment for Fencing shall be made under the appropriate Contract Item Unit Price per Linear Feet (LF) reset.

Item No.	Description	Unit
550.1	Remove and reset fence	LF
550.2	6’ high chainlink fence	LF
550.3	6’ high wood fence	LF

C5.90 – TEMPORARY IRRIGATION SYSTEM

The Contractor shall furnish and install all labor, materials, services, equipment and appurtenances to install new irrigation systems or replace, repair existing within the work site as depicted on the Contract Drawings.

The work includes, but is not limited to, the following: installation of temporary irrigation system including approximately 650 feet of polyethylene tubing, tree bubblers, latching valve, and battery operated controller connected to a hydrant meter as depicted on the Contract Drawings and in accordance with the requirements of the FDOT Workmanship and Materials and Technical Specification Section 590 – Underground Irrigation System. Meter to be provided by the City, all other materials are to be included in the lump sum unit price per each project work order.

Payment for the new irrigation system will be made at the appropriate Contract Lump Sum Price per each under the project work order.

Item No.	Description	Unit
590	Temporary Irrigation System	EA

C9.00 - PVC PIPE (GREEN AWWA C900 DR-18 & C905 DR-25)

The Contractor shall furnish all materials and equipment, construct, test, and maintain complete all pipe sewers as shown on the Plans, specified, and directed by the Engineer.

The pipe sewers shall conform to the latest version of the City of Tampa– Workmanship and Materials Section 11 – PVC Pipe Gravity.

The work includes all related work and appurtenances required to locate existing sanitary sewer lines and make the connections as shown on the Plans to the proposed lines, maintaining existing sanitary sewer in operation, removal of existing abandoned or out-of-service pipes encountered during excavation, sidewalks, driveways, curbs, curb and gutter, and permanent pavement, excavation, saw cutting concrete and asphalt, short tunnels, backfill, sheeting, shoring, bracing, dewatering, pipe bedding, pipe fittings, pipe work, making all pipe connections, locate wire, standard pipe cradles and encasements shown on the Plans, installation and removal of plugs and bulkheads, testing, special temporary and nonpermanent pavement replacement, nonpermanent sidewalk and driveway replacement, protection, repair and replacement of utilities and house services, protection, trimming and replacement of trees and shrubs, protection, repair and replacement of culverts and other storm water facilities, reconstruction or re-grading of road shoulders and ditches, disposal of surplus excavated material, protection of existing structures, removal and replacement of fence, clearing and grubbing, making joints between pipes and manholes or structures and all other work incidental to the installation of the sanitary sewer pipe complete in place.

The work does not include sheeting left in place, rock excavation, manholes, surface restoration comprising lawn or permanent pavement replacement, additional earth excavation or additional selected fill materials, driveways, sidewalk and curb or curb and gutter replacement and, when shown on the Plans or ordered, such work will be paid for under other appropriate Contract Items.

The quantity of sewer pipe, in linear feet, to be measured for payment shall be the actual length of new pipelines placed in the work, as shown, specified and directed. Depth of cut for sanitary sewers shall be measured from the original ground surface to the pipe invert. Pipelines will be measured along the centerline of the pipe.

The measured length for sanitary force mains will include all fittings and short tunnels with deductions for the laid length of valves.

Payment for Sewer Pipe will be made at the appropriate Contract Item Unit Price per linear foot (LF) of the respective pipe.

Item No.	Description	Unit
900.1	8" Dia. PVC Pipe (C-900, DR-18)	LF

C17.06 - SOLID WALL PVC PIPE HOUSE LATERAL

The Contractor shall furnish all materials and equipment, construct, test and maintain house laterals.

The pipe laterals shall conform to the latest version of the City of Tampa– Workmanship and Materials Section 11 – PVC Pipe Gravity.

The work includes all related work and appurtenances required to locate existing house connections and make the connections to the proposed lines, excavation, short tunnels, backfill, sheeting, shoring, bracing, dewatering, removal of sidewalks, driveways, curbs, curb and gutter and permanent pavement, pipe bedding, pipe, pipe fittings used for change in line or grade where directed by the Engineer, disposal of surplus excavated material, protection, repair and replacement of utilities, house services, trees and shrubs and other storm sewerage facilities, special temporary pavement, restoration and regrading of road shoulders and ditches and all other work incidental to the installation of pipe house laterals complete in place as shown on the Plans, specified, and directed by the Engineer.

The length of House Lateral to be measured for payment will be the actual length of house lateral placed and shown on the Detail Sheets.

Payment for House Lateral will be made at the Contract Item Unit Price per each (EA) of house lateral.

Item No.	Description	Unit
1706	6-Inch Diameter PVC Pipe House Lateral (SDR-35) (<30')	EA

C28.00 – DUCTILE IRON SANITARY FORCE MAIN OFFSET

The Contractor shall furnish all materials and equipment, construct, test and maintain Ductile Iron pipe as shown on the Plans, specified, and directed by the Engineer.

The forcemain offset, fittings and tap shall conform to the latest version of the City of Tampa– Workmanship and Materials Section 30 – Miscellaneous Pipe & Fittings. The dewatering and bypass pumping shall conform to the latest version of the City of Tampa Workmanship and Materials Section – 108 Dewatering, Section 15- Laying & Joining Forcemain pipe for Sewer and SP-64 – Bypass pumping.
Water Materials Section (MS) - Ductile Iron Pipe and Fittings,
The work includes all excavation, backfill, sheeting, shoring, bracing, dewatering, pressure testing, removal of sidewalks, driveways, curbs, curb and gutter, and permanent pavement, Ductile Iron pipe, tees, taps, wyes, valves, couplings, disposal of surplus excavated material, protection, repair of utilities, house services, trees and shrubs and culverts and other storm sewerage facilities, pumps, piping, hoses, generators, fuel and all other work incidental to the installation of sanitary forcemain offset complete in place as shown on the Plans, specified, and directed by the Engineer.

Payment for will be made for each complete force main offset made at the appropriate Contract Item Unit Price per each (EA) installed.

Item No.	Description	Unit
2800	8-Inch Diameter, ductile iron, Pipe Sewer FM offset	EA

C46.60 - SOLID WALL (SDR-35) PVC CLEANOUT AND COVER

The Contractor shall furnish all materials and equipment, construct, test and maintain solid wall SDR-35 pipe cleanouts and covers.

The pipe cleanouts and covers shall conform to the latest version of the City of Tampa– Workmanship and Materials Section 30 – Miscellaneous Pipe & Fittings.

The work includes all excavation, backfill, sheeting, shoring, bracing, dewatering, removal of sidewalks, driveways, curbs, curb and gutter and permanent pavement, pipe bedding, pipe wye and adjacent pipe bend, plug and treated wood marker stake at the end of the house lateral, disposal of surplus excavated material, protection, repair and replacement of utilities, house services, trees and shrubs, and culverts and other storm sewerage facilities, and all other work incidental to the installation of cleanouts and covers complete in place as shown on the Plans, specified, and directed by the Engineer.

The number of cleanouts and covers to be measured for payment will be the actual number of cleanouts and covers installed in the work.

Payment for cleanouts and covers shall comprise the additional cost of each cleanout and cover over the cost of straight sewer pipe of equivalent length and diameter and will be made at the Contract Item Unit Price per each (EA) cleanout and cover.

Item No.	Description	Unit
4660	6-Inch Diameter PVC Cleanout and Cover	EA

C89.00 – SOD REPLACEMENT AND HYDROSEEDING

The Contractor shall furnish all labor, materials, equipment and services to replace and maintain all lawn areas removed or damaged by pipeline construction and installation of hydroseeding for new pond construction and appurtenant work as shown on the Plans, specified, and directed by the Engineer.

Sod replacement by St. Augustine (8901), Bahia sodding (8902) and Hydroseeding (8903) or equal shall conform to the requirements of the Workmanship and Materials Section 2930 – Sodding and Hydroseeding and FDOT Workmanship and Materials and Technical Specifications Section 570 – Turf.

Sod replacement along pipelines, sidewalks, curb and gutters, edge of pavements, house laterals, and around manholes and structures will be included for payment under this Contract Item.

The quantity of lawn area, in square yards, to be measured for payment will be the actual area of seeded or Bahia sodded areas, within the payment limits for surface restoration shown on the Plans. Payment limits for lawn replacement along pipelines shall include removal and replacement of lawn area incidental to construction of manholes and structures. All lawn area removed or damaged and requiring replacement outside payment limits will not be measured for payment; however, the type of replacement shall be determined as specified above, and shall be replaced by the Contractor at his own expense.

Payment for Sod Replacement will be made at the appropriate Contract Item Square Yard (SY) Unit. Payment for HydroSeed will be made at the appropriate Contract Item Square Yard (SY) Unit.

Item No.	Description	Unit
8901	Sod – St. Augustine	SY
8902	Sod – Bahia	SY
8903	HydroSeeding	SY

C92.50 –ADA COMPLIANT RAMPS

The Contractor shall furnish all labor, equipment and materials to construct the ADA Compliant ramps and appurtenant work as shown on the Contract Plans, specified, and directed by the Engineer.

The work includes all detectable warning surfaces and all appurtenant work complete in place. All ADA pedestrian ramps will comply with FDOT Index 304, 2015 Design.

The quantity of ADA Compliant ramps measured for payment will be the number of each as shown on the Contract Plans, or as specified and directed by the Engineer.

Payment for ADA Compliant ramps will be made at the Contract Item Unit Price for each of the pedestrian ramps placed.

Item No.	Description	Unit
9250	ADA Compliant Ramps	EA

C92.60 – TREE REPLACEMENT

The Contractor shall furnish all labor, materials, equipment and services to install trees as shown on the Plans, specified, and directed by the Engineer.

The work shall include all work to acquire, install, establish, 90 day warranty tree materials, temporary irrigation system as shown on plan and tree replacement in accordance with the plans, including installation and removal of tree bracing, watering, fertilization, and maintenance as identified on the plans, maintenance schedule, and within the specifications.

Tree plantings shall conform to the requirements of the City Standard Specifications – Workmanship and Materials Section 112 – Trees, Plants and Groundcovers.

Payment for tree replacement shall be made under the appropriate Contract Item Unit Price per each (EA).

Item No.	Description	Unit
9260.4	4” Oak Tree	EA
9260.5	6” Oak Tree	EA

SCHEDULE C - WATER CONTRACT PAY ITEMS

C1.00 - General

The Contractor shall receive and accept the compensation provided in the Proposal and the Agreement as full payment for furnishing all materials and all labor, tools and equipment, for performing all operations necessary to complete the work under the Agreement, and also in full payment for all loss or damages arising from the nature of the work, or from any discrepancy between the actual quantities of work and quantities herein estimated by the Engineer, or from the action of the elements or from any unforeseen difficulties which may be encountered during the prosecution of the work until the final acceptance by the Department.

It is the intent of these contract documents that any cost for which compensation is not directly provided by a bid item shall be prorated and included in the bid item for which they are required. Failure of the Contractor to follow this procedure shall be basis for rejection of his bid.

The prices stated in the Bid Proposal include all costs and expenses for taxes, labor, equipment, commissions, transportation charges and expenses, patent fees and royalties, labor for handling material during inspection together with any and all other costs and expenses for performing and completing the work as shown on the plans and specified herein. The basis of payment for any item at the unit price shown in the Proposal shall be in accordance with the description of that item in this Section.

No separate payment will be made for the following items, the cost of such work shall be included in the applicable contract pay items of work, including separate mobilization/ demobilization charges for compliance with FDEP or any other agency:

1. Separate mobilization charges for each work order except as noted;
2. Clearing and grubbing;
3. Excavation, including necessary pavement/slab removal;
4. Shoring and sheeting as required by OSHA trench excavation safety standards unless specifically provided for in a pay item;
5. Dewatering and proper disposal of all water unless specifically provided for in a pay item;
6. Backfill and proper compaction, including suitable fill;
7. Grading;
8. Replacement or restoration of paved or unpaved roadways, grass and shrubbery plots outside of established pay limits;
9. Temporary facilities and controls during construction such as water/sanitary facilities, traffic control, informational signs and environmental protection, unless specifically provided for in a pay item;
10. Providing and maintaining silt barriers for drainage structures and silt fences for the duration of the project;
11. Removing and legally disposing of waste material due to construction, including but not limited to valve boxes that need to be removed from abandoned water mains;
12. Cleanup and restoring the job site to its original condition, which includes but is not necessarily limited to restoring the ground surface to its original grade;
13. Testing and placing system in operation, including re-mobilization for FDEP testing;
14. Any material and equipment required to be installed and used for the tests;
15. Maintaining the existing quality of service during construction, including flushing mains that are cleared but not put into service after the bac-T tests are complete;
16. Repair of sanitary sewer house laterals that were properly marked (see Specific Provision SP-31)
17. Repair of water services damaged during construction;

18. Adjusting new or existing water meter boxes to grade which are affected by construction;
19. Appurtenant work as required for a complete and operable system;
20. Coordination with all Federal, State and Local agencies and utilities;
21. Cutting of existing or new pipe for purposes of abandonment or installation of new pipe, valves or fittings;
22. Tree trimming as required by the City of Tampa Parks Department or any other agency unless specifically provided for as a contract item;
23. Verification of pipe elevation as stated in Section 8 of the General Provisions
24. Repair of private irrigation systems damaged during construction;
25. Furnishing and installing suitable temporary fences, as directed by the Engineer, to adequately secure areas protected by a permanent fence when that permanent fence must be removed. The temporary fence shall remain in place until the permanent fence is replaced;
26. Furnishing and installing all HDPE MJ adapters, HDPE flanged adapters, HDPE electrofusion tapping tees, electrofusion corporation saddles or HDPE electrofusion couplings;
27. Maintaining red-line drawings of changes to construction plans, to be submitted for FDEP clearance;
28. Furnishing record drawings based on the redline drawings in AutoCAD 2015 or higher and one set of drawings on paper. The City will provide the AutoCAD plans used for the design. **Final Payment will not be made for work orders until As-built drawings are received.**
29. Furnishing and installing polyethylene encasement per City of Tampa Water Standard Detail 2.05 (which can be found on-line) for all buried ductile iron pipe, all fittings and tapping sleeves.

The Contractor's attention is again called to the fact that the quotations for the various items of work are intended to establish a total price for completing the work in its entirety. Should the Contractor feel that the cost for any item of work has not been established by the Proposal or Contract Pay Items, he shall include the cost for that work in some other applicable bid item, so that his proposal for the project does reflect his total price for completing the work in its entirety.

The Contractor may be authorized to receive payment after each work order is complete, approved, accepted, and administratively processed by the City.

The quantities for payment under this Agreement shall be determined by actual measurement of the completed items, in place, ready for service and accepted by the City, in accordance with the applicable method of measurement therefore contained herein. A representative of the Contractor shall witness all field measurements.

All work shall be in accordance with the Technical Specifications herein and Standard Details (located at the Water Departement City's website). All materials shall be in accordance with the Material Specifications herein.

C2.00 Pipeline Installation

C2.10 Ductile Iron and PVC Pipe, Fittings, Tap

The Contractor shall provide all labor, equipment, and materials to furnish and install the full-port tap, ductile iron pipe or PVC pipe, plugs, caps, bends, sleeves, reducers, tees, crosses, and offsets.

Furnishing and installation a full-port tap. The tapping sleeve installation shall include:

1. Excavating the trench;
2. Maintaining the trench that shall include dewatering and bracing and sheeting where required or as directed by the Engineer;

3. Furnishing and installing the tapping sleeve;
4. Pressure testing the tapping sleeve and valve;
5. Making the full port tap, up to and including 42";
6. Furnishing and installing mechanical joint tapping sleeves for size on size pipe taps or as directed by the engineer;
7. Furnishing, installing and sealing the tapping sleeve with blue polyethylene encasement of not less than 8 mils thick;

Furnishing and/or installing ductile iron or PVC pipe, plugs, caps, bends, sleeves, reducers, tees, crosses, and offsets shall include, but may not be limited to:

1. Furnishing all construction layouts
2. Field locating all utilities to confirm horizontal and vertical location in areas of possible conflict;
3. Furnishing all labor equipment and materials to excavate the trench;
4. Maintaining the trench which shall include dewatering and sheeting and bracing as required by OSHA or as directed by the Engineer standards unless specifically provided for in a pay item;
5. Cleaning dirt and foreign material from within pipe and bell;
6. Beveling field-cut joints and pipe shorts;
7. Furnishing and installing EPDM gaskets for all DIP and PVCP;
8. Furnishing and installing Department approved pipe and any pipe shorts as part of the pipeline;
9. Furnishing and installing Department approved pipe in casing pipe when shown on the plans;
10. Installing push-on joint restraint gaskets for DIP as shown on the plans or as directed by the Engineer (furnishing push-on restraint gaskets will be compensated under appropriate pay items);
11. Furnishing and installing blue for polyethylene encasement per standard detail 2.05 (City of Tampa Water Dept. website);
12. Furnishing and installing 2, 4,6, 8, 12, and 16-inch nominal diameter PVC pipe or 4, 6, 8, 12, 16, 20, 24, 30, 36, 42, or 48-inch nominal diameter ductile iron pipe at various depths;
13. Furnishing and installing 2-inch PVC fittings when necessary at various depths;
14. Furnishing and installing on all PVC pipe and fittings, a continuous double run of 14-gauge wire attached to the top of the pipe with duct tape. The wire shall be looped around each bell. There shall be no dead ends and the locator wire shall be brought into a separate curb stop box at every valve box;
15. Cleaning up and removing excess water main pipe and appurtenances;
16. Pressure testing the water main pipe;
17. Furnishing and installing temporary pipe short's valves and bends for full port flushing;
18. Furnishing and installing valve location protection devices per Standard Detail 3.05 whenever needed to keep valve locations visible;
19. Disinfecting the water main pipe and bacteriological testing;
20. Furnish and apply paint for any above ground or aerial crossing pipe and appurtenances. Paint to be high-grade enamel, OSHA blue for potable water or purple for reclaim water as directed by the Engineer;
21. Backfilling and compacting the trench;
22. Cleaning up and restoring the job site which shall include re-grading the terrain; and
23. Removing and legally disposing all waste materials.

Cover over pipe shall be defined as the vertical distance from the top of the pipe to the surface grade above the main. Trench depth shall be defined as the vertical distance from the bottom of the barrel of the pipe to the surface grade above the main.

Payment for connecting new water mains to existing water mains will be made utilizing the contract unit price for installing the fittings, polywrap, or valves used in the connection.

The cost to hydrostatically test and disinfect the ductile iron or PVC water mains shall be prorated and included in the pipeline construction unit prices. The prorated cost should include, but may not be limited to furnishing and installing all:

1) Material;
2) Labor;
3) Necessary pumps;
4) Recorder charts;
5) Gages (300PSIG limit, oil filled);
6) Chemicals;
7) Temporary valves;
8) Temporary plugs;
9) Sample taps, (including installation of brass dry main plugs after tap removal);
10) Blow off assemblies (including removal after disinfection is complete);
11) Dry main plugs;

necessary to pressure test and disinfect various sizes and depths of ductile iron pipe or PVC pipe. Furthermore, no extra compensation shall be paid to the Contractor for:

1. Furnishing and installing brass, dry main plugs at the locations of all removed sample taps, or
2. Removing existing "end of line" or blow-off valves after the pipeline has been disinfected and prior to connecting the newly installed pipeline to the existing water main.

All temporary materials or materials not remaining in the ground after the completion of the disinfection and pressure testing shall remain the property of the Contractor.

Payment shall be made under:

Item No.	Description	Unit
2102	Furnish and install 8" ductile iron pipe offset	EA
2103	Furnish and install 12” ductile iron pipe offset	EA
2104	Furnish and install 6" ductile iron pipe and restraints	LF
2105	Furnish and install 8" ductile iron pipe offset and restraints	LF

C2.20 Furnish and Install HDPE Pipe by Horizontal Directional Drilling

The Contractor shall provide all labor, equipment, and materials to furnish and install the HDPE pipe using horizontal directional drilling (HDD) as a work method. The furnishing and installation of the HDPE pipe shall include, but may not be limited to:

1. Furnish and install construction layout by a registered professional land surveyor;
2. Field locating all utilities, except existing water lines not shown properly on the plans, to confirm horizontal and vertical location in areas of possible conflict;
3. Excavating the access pits;
4. Maintaining the pits which shall include dewatering and sheeting and bracing as required by OSHA or as directed by the Engineer;
5. Joining pipe sections by butt fusion or by furnishing and installing an appropriately sized HDPE electrofusion coupling;
6. Pigging, cleaning or flushing the line to remove dirt, debris if directed by the engineer;
7. Furnishing and installing temporary valve, pipe shorts and bends to accomplish full port flushing of

mains;

8. Furnishing and installing Department approved pipe and any pipe shorts as part of the pipeline;
9. Furnishing and installing 4, 6, 8, 10, 12, and 14-inch nominal diameter HDPE pipe and 2-inch HDPE tubing at various depths by horizontal directional drilling;
10. Furnishing and installing on all HDPE pipe and tubing, two continuous 10 gauge wires along the top of the pipe. There shall be no dead ends and each locator wire shall be routed into a curb stop box at every valve box. Connections between wire ends shall be made using an approved connection as shown in the standard details;
11. Furnishing and installing 10 gauge tracer wire on Ductile Iron Water Mains 16" and greater;
12. Removing excess water main pipe and appurtenances;
13. Pressure testing the water main pipe;
14. Disinfecting the water main pipe;
15. Furnishing and installing push-on and mechanical joint restrainers on existing pipe as shown on the plans or as directed by the Engineer;
16. Backfilling and compacting the trenches or pits including re-grading the terrain;
17. Cleaning up and restoring the job site which shall include re-grading the terrain; and
18. Removing and legally disposing of all waste materials.

Cover over pipe shall be defined as the vertical distance from the top of the pipe to the surface grade above the main. Trench depth shall be defined as the vertical distance from the bottom of the barrel of the pipe to the surface grade above the main.

Payment for connecting new water mains to existing water mains will be made utilizing the contract unit price for installing the tapping sleeves, restraints, fittings or valves used in the connection.

The cost to hydrostatically test and disinfect the HDPE water mains shall be prorated and included in the HDPE pipeline construction unit prices. The prorated cost should include, but may not be limited to furnishing and installing all:

1) Material
2) Labor
3) Necessary pumps
4) Recorder charts
5) Gages (200 PSIG limit, oil filled)
6) Chemicals
7) Temporary valves
8) Temporary plugs
9) Sample Taps, (including furnishing and installation of brass dry main plugs in HDPE electrofusion corporation saddles after sample tap removal)
10) Blow off assemblies (including removal after disinfection is complete)
11) Dry main plugs installed in HDPE electrofusion corporation saddles.

necessary to pressure test and disinfect various sizes and depths of HDPE pipe. Furthermore, no extra compensation shall be paid to the Contractor for:

1. Furnishing and installing brass, dry main plugs in HDPE electrofusion corporation saddles at the locations of all removed sample taps, or
2. Removing existing "end of line" or blow off valves after the pipeline has been disinfected and prior to connecting the newly installed pipeline to the existing water main.

All temporary materials or materials not remaining in the ground after the completion of the disinfection and pressure testing shall remain the property of the Contractor.

The pipe quantities to be paid for under this section shall be based on the size and the horizontal distance in linear feet of HDPE pipe measured along the top centerline of the pipe in place complete and acceptable to the Engineer.

Payment shall be made under:

Item No.	Description	Unit
2200	F&I - 2" HDPE tubing w/HDPE transition adapters at various depths offset	EA

C2.50 Removal and Abandonment of Pipe

The Contractor shall provide all labor, equipment and materials to remove the abandoned pipeline and appurtenances (such as valves, fittings, and other materials) as designated on the plans or directed by the Engineer.

The removal of the abandoned pipe shall include, but may not be limited to:

1. Furnishing all equipment, labor, tools and equipment to excavate the trench;
2. Maintaining the trench;
3. Removing the abandoned pipeline and appurtenances;
4. Furnishing and installing grout to plug any abandoned open-end pipe;
5. Furnishing and installing a cap or plug and restrain adequately to withstand a working pressure of 150 psi, on all in-service open end pipe;
6. Transporting the removed pipe and appurtenances, without delay, to a location designated by the Engineer;
7. Unloading the removed pipeline and appurtenances at the designated location;
8. Cutting of any existing pipe to accommodate abandonment;
9. Backfilling and compacting the trench;
10. Cleaning up and restoring the job site which shall include re-grading the terrain; and
11. Removing and legally disposing of all waste materials.

Payment shall be made based on the size and horizontal distance in linear feet of pipeline removed measured along the top centerline. At the Department's option, all abandoned pipe and appurtenances shall remain the property of the Department. If the Department opts not to remain owner of the removed facilities, then the Contractor shall remove and properly dispose of the facilities at his expense.

Payment shall be made under:

Item No.	Description	Unit
2501	Remove 4" - 12" diameter abandoned pipe	LF

C3.00 Thrust Restraint

The Contractor shall provide for all labor, equipment and materials to completely furnish and/or install thrust restraint. The furnishing and installation of the thrust restraint shall include but not be limited to:

1. Excavating the trench;
2. Maintaining the trench that shall include dewatering and bracing and sheeting where required or as directed by the Engineer;

3. Furnishing and installing approved wedge action restraint fitting or flange joint restraints;
2. Furnishing and installing manufactured restrained joints;
3. Furnishing of approved push-on restraint EPDM rubber gasket-type restraining devices (gaskets with stainless steel locking segments vulcanized into the rubber) on new push-on ductile iron pipe;
4. Furnishing and installing approved restraining devices on proposed PVC push-on joint pipe;
7. Furnishing and installing approved restraining devices on joints of existing pipe;
8. Backfilling and compacting the trench;
9. Cleaning up and restoring the job site which shall include re-grading the terrain; and
10. Removing and legally disposing of all waste materials.

Payment for installation of manufactured restrained joints shall be for each bell and spigot joint assembled.

No additional compensation shall be made to the Contractor for field poured concrete in excess of the amount detailed in the Technical Specification or Standard Details without approval by the Engineer.

Payment will not be credited for restraining devices installed in conjunction with fire hydrant installations. Payment for installation of thrusting restraints for fire hydrants and for pipe on fire hydrant leads is to be included in the price quoted for installation of fire hydrant assemblies.

Payment shall be made under:

Item No.	Description	Unit
3000	Furnish & install 4" wedge-action or flange restraints	EA
3040	Furnish & install 4" bell or mechanical joint restraints on existing pipe	EA
3042	Furnish & install 8" bell or mechanical joint restraints on existing pipe	EA

C5.00 Fire Hydrants

The Contractor shall provide all labor, equipment and specified materials to completely furnish and/or install full and complete fire hydrant assemblies on new and existing water mains as shown on the construction plans, removal and relocation or as directed by the Engineer which will include the protection post.

The “hydrant assembly” to be furnished is 10 LF or less of 6” DIP, hydrant elbow, and hydrant barrel extension and hydrant barrel as shown in the City of Tampa Water Dept. Standard Detail 4.01 (found on-line).

Hydrant assembly installation shall include, but may not be limited to:
1. Excavation of hydrant assembly trench;
2. Maintaining the trench that shall include dewatering, bracing and sheeting where required or as directed by the Engineer;
3. Anchoring the hydrant to existing or new main;
4. Furnishing and installing of up to and including ten (10) feet of 6-inch ductile iron pipe;
5. Removing any plugs, caps, restraining devices, etc. from existing water mains;
6. Furnishing and installing all mechanical thrust restraint beginning at the hydrant valve as required in the Technical Specifications or as directed by the Engineer;
7. Furnish and installing polyethylene encasement for all underground pipe and fittings;
8. Furnish and install hydrant in the plumb position with 4.5’clearance in the back and 7’ clearance in the front and on each side from walls, poles and obstructions;
9. Furnishing and installing a concrete thrust collar around the barrel of the hydrant and 12” below grade as shown in standard detail 4.01;
10. Furnishing and installing of a concrete "support block" under each hydrant;
11. Furnishing and installing of a concrete support cradle under each hydrant tee on PVC mains;

12. Backfilling and compacting hydrant assembly trench;
13. Furnish high grade enamel OSHA yellow paint and paint hydrant barrel as required in the Technical Specifications;
14. Furnishing high grade enamel OSHA green paint and paint the hydrant bonnet;
15. Furnishing and installing one blue, reflective pavement marker (RPM) in the street adjacent to the hydrant at a location to be determined by the Engineer. The RPM shall meet or exceed all provisions of the Florida Department of Transportation, Standard Specifications for Road and Bridge Construction, Section 706;
16. Pressure testing the hydrant assembly in conformance with these documents;
17. Backfilling and compacting the trench;
18. Cleaning up and restoring the job site which shall include re-grading the terrain; and
19. Removing and legally disposing of all waste materials.
20. Excavation of protection post pit;
21. Furnishing and installing of 6" diameter ductile iron protection post in a plumb position with all of the hose nozzles clear of the posts;
22. Furnishing and installing the necessary concrete as called for in the Technical Specifications; and
23. Furnishing OSHA yellow paint and painting protection post
24. Cleaning up and restoring the job site which shall include re-grading the terrain; and
25. Removing and legally disposing of all waste materials.

The Contractor shall do all things necessary to completely install a fire hydrant assembly in accordance with the Technical Specifications, Standard Details or as directed by the Engineer. Payment will be based on the number of hydrant assemblies incorporated into the pipeline system complete and including 6-inch ductile iron pipe connecting the hydrant gate valve to hydrant and working to the satisfaction of the Engineer.

In addition, it will be the Contractor's responsibility to determine the correct size (bury depth) of each hydrant installed so that the requirements of the Technical Specifications are satisfied. Any hydrant not installed to the proper grade shall be replaced with one of the correct size by the Contractor at his expense prior to final approval and acceptance.

Fittings required because of contractor convenience, (i.e. installed because the contractor elected to install a shallow bury hydrant) shall be furnished and installed at the contractor's expense.

Payment shall be made under:

Item No.	Description	Unit
5000	Furnish and install full fire hydrant assembly on new or existing mains	EA
5001	Remove and relocate fire hydrant	EA

C6.00 Valves

The Contractor shall provide all labor, equipment and materials to completely furnish and install 6-inch through 8-inch gate valves, including all accessories and incidentals. The valve installation shall include, but may not be limited to:

1. Excavating the trench;
2. Maintaining the trench that shall include dewatering and bracing and sheeting where required or as directed by the Engineer;
3. Furnish and install a gate valve in a mainline of DIP, CIP or PVCP with a valve box or a tapping valve on a tapping sleeve with a valve box;
4. Furnish and install a gate valve on HDPEP along with all associated HDPE mechanical joint adapters and

appurtenances;
5. Backfilling and compacting the trench;
6. Furnishing, forming and pouring a 6-inch thick concrete pad around each valve box installed in non-paved areas;
7. Furnishing paint and painting valve cover;
8. Furnishing and installing or forming and pouring concrete support blocks under valves installed on PVC and HDPE pipeline;
9. Cleaning up and restoring the job site which shall include re-grading the terrain; and
10. Removing and legally disposing of all waste materials.

Payment shall be made for the number of each size valve and valve box installed and incorporated into the piping system complete, working and operating to the satisfaction of the Engineer.

Payment shall be made under:

Item No.	Description	Unit
6002	Furnish and install 6" gate or tapping valve and box on DIP, CIP or PVCP	EA
6003	Furnish and install 8" gate or tapping valve and box on DIP, CIP or PVCP	EA

C6.10 Line Stops

The Contractor shall furnish all labor, equipment, tools and materials to install line stops on existing water mains.

The line stop installation shall include but is not limited to:

1. Excavating the trench;
2. Maintaining the trench that shall include dewatering and bracing and sheeting where required or as directed by the Engineer;
3. Furnishing and installing the line stop;
4. Furnishing and installing polywrap on line stop appurtenances remaining on the pipe after the line stop is removed;
5. Furnishing and installing reverse dead-man restraint with split wedge action restraints as shown in Standard 2.10A.
6. Compacting soil in trench around dead-man and line stop to a minimum 90% modified proctor density;
7. Excavating the trench to remove line stop;
8. Backfilling and compacting the trench;
9. Cleaning up and restoring the job site which shall include re-grading the terrain; and
10. Removing and legally disposing of all waste materials.

Payment shall be made under:

Item No.	Description	Unit
6104	F&I 8” Line Stop on Existing Water Main	EA

Payment for reverse dead-man restraints shall be paid for under the appropriate items for split wedge action restraints and poured concrete thrust blocking. Restoration items shall be paid for under the appropriate item as needed.

C9.93 Concrete Block Thrust Restraint

The Contractor shall provide for all labor, equipment and materials to completely furnish and install concrete thrust restraint when authorized by the engineer. The installation of the concrete thrust restraint shall include but

not be limited to:

1. Excavating the trench;
2. Maintaining the trench that shall include dewatering and bracing and sheeting where required or as
3. Furnishing and installing approved pre-cast thrust blocks;
4. Furnishing, forming, and pouring thrust blocks;
5. Backfilling and compacting the excavation;
6. Cleaning up and restoring the job site which shall include re-grading the terrain; and
7. Removing and legally disposing of all waste materials.

No additional compensation shall be made to the Contractor for field poured concrete in excess of the amount detailed in the Technical Specification or Standard Details without prior approval by the Engineer.

Payment will not be credited for restraining devices installed in conjunction with fire hydrant installations. Installation of thrusting units for fire hydrants is to be included in the price quoted for installation of fire hydrant assemblies.

Payment shall be made under:

Item No.	Description	Unit
9930	Furnish and Install pre-cast thrust blocks	EA

City of Tampa – DMI Sub-(Contractors/Consultants/Suppliers) Payments

(FORM MBD-30)

[ ] Partial [ ] Final

Contract No.: _____ WO#,(if any):_____ Contract Name:_____

Contractor Name:_____ Address:_____

Federal ID:_____ Phone:_____ Fax:_____ Email:_____

GC Pay Period:_____ Payment Request/Invoice Number:_____ City Department:_____

Total Amount Requested for pay period: $_____ Total Contract Amount(including change orders):$_____

-Type of Ownership - (F=Female M=Male), BF BM = African Am., HF HM = Hispanic Am., AF AM = Asian Am., NF NM = Native Am., CF CM = Caucasian S = SLBE

Type Trade/Work Activity []Sub []Supplier Federal ID	Company Name Address Phone & Fax	Total Sub Contract Or PO Amount	Amount Paid To Date Amount Pending Previously Reported	Amount To Be Paid For This Period Sub Pay Period Ending Date
			$	$
			$	$
			$	$
			$	$
			$	$
			$	$

(Modifying This Form or Failure to Complete and Sign May Result in Non-Compliance)

Certification: I hereby certify that the above information is a true and accurate account of payments to sub – contractors/consultants on this contract.

Signed:_____ Name/Title:_____ Date:_____

 Note: Detailed Instructions for completing this form are on the next page

Page 2 of 2 – DMI Payment

Instructions for completing The DMI Sub-(Contractors/Consultants/ Suppliers) Payment Form

(Form MBD-30)

This form must be submitted with all invoicing or payment requests where there has been subcontracting rendered for the pay period. If applicable, after payment has been made to the subcontractor, "Waiver and Release of Lien upon Progress Payment", "Affidavit of Contractor in Connection with Final Payment", or an affidavit of payment must be submitted with the amount paid for the pay period. The following will detail what data is required for this form. The instructions that follow correspond to the headings on the form required to be completed. **(Modifying or omitted information from this form my result in non-compliance).**

- **Contract No.** This is the number assigned by the City of Tampa for the bid or proposal.
- **W.O.#** If the report covers a work order number (W.O.#) for the contract, please indicate it in that space.
- **Contract Name.** This is the name of the contract assigned by the City of Tampa for the bid or proposal.
- **Contractor Name.** The name of your business.
- **Address.** The physical address of your business.
- **Federal ID.** A number assigned to a business for tax reporting purposes.
- **Phone.** Telephone number to contact business.
- **Fax.** Fax number for business.
- **Email.** Provide email address for electronic correspondence.
- **Pay Period.** Provide start and finish dates for pay period. (e.g. 05/01/13 – 05/31/13)
- **Payment Request/Invoice Number.** Provide sequence number for payment requests. (ex. Payment one, write 1 in space, payment three, write 3 in space provided.)
- **City Department**. The City of Tampa department to which the contract pertains.
- **Total Amount Requested for pay period.** Provide all dollars you are expecting to receive for the pay period.
- **Total Contract Amount (including change orders).** Provide expected total contract amount. This includes any change orders that may increase or decrease the original contract amount.
- **Signed/Name/Title/Date**. This is your certification that the information provided on the form is accurate.
- **See attached documents.** Check if you have provided any additional documentation relating to the payment data. Located at the bottom middle of the form.
- **Partial Payment.** Check if the payment period is a partial payment, not a final payment. Located at the top right of the form.
- **Final Payment.** Check of this period is the final payment period. Located at the top right of the form.

The following instructions are for information of any and all subcontractors used for the pay period.

- **(Type) of Ownership.** Indicate the Ethnicity and Gender of the owner of the subcontracting business or SLBE.
- **Trade/Work Activity.** Indicate the trade, service, or material provided by the subcontractor.
- **SubContractor/SubConsultant/Supplier.** Please indicate status of firm on this contract.
- **Federal ID.** A number assigned to a business for tax reporting purposes. This information is critical in proper identification of the subcontractor.
- **Company Name, Address, Phone & Fax**. Provide company information for verification of payments.
- **Total Subcontract Amount.** Provide total amount of subcontract for subcontractor including change orders.
- **Amount Paid To Date.** Indicate all dollars paid to date for the subcontractor.
- **Amount Pending, Previously Reported.** Indicate any amount previously reported that payments are pending.
- **Amount To Be Paid for this Period.** Provide dollar amount of dollars requested for the pay period.
- **Sub Pay Period Ending Date.** Provide date for which subcontractor invoiced performed work.

Forms must be signed and dated or will be considered incomplete. The company authorized representative must sign and certify the information is true and accurate. Failure to sign this document or return the document unsigned can be cause for determining a company is in non-compliance of Ordinance 2008-89.

If any additional information is required or you have any questions, you may call the Minority Business Development Office at (813) 274-5522.

SIGN EXAMPLE ONLY GRAPHIC TO BE DEVELOPED BY CONTRACTOR

scale: 3" 3"

Sign Information

Building a Better Tampa

David L. Tippin Water Treatment Facility
Caustic Soda Piping Improvements

Project provides for improvements at the David L. Tippin Water Treatment Facility to improve the reliability and safety of the Sodium Hydroxide System of the water distribution system within the facility.

$TBD investment
Scheduled for completion in TBD 2014

TBD

Colors

Blue: Sherwin Williams Naval SW6244
Green: Sherwin Williams Center Stage SW6920
White: Sherwin Williams Pure White SW7005

Font

Franklin Gothic

K:\CA\edr\dpw project sign 4-28-04.dwg, 08/22/2005 12:32:38 PM, pw1m

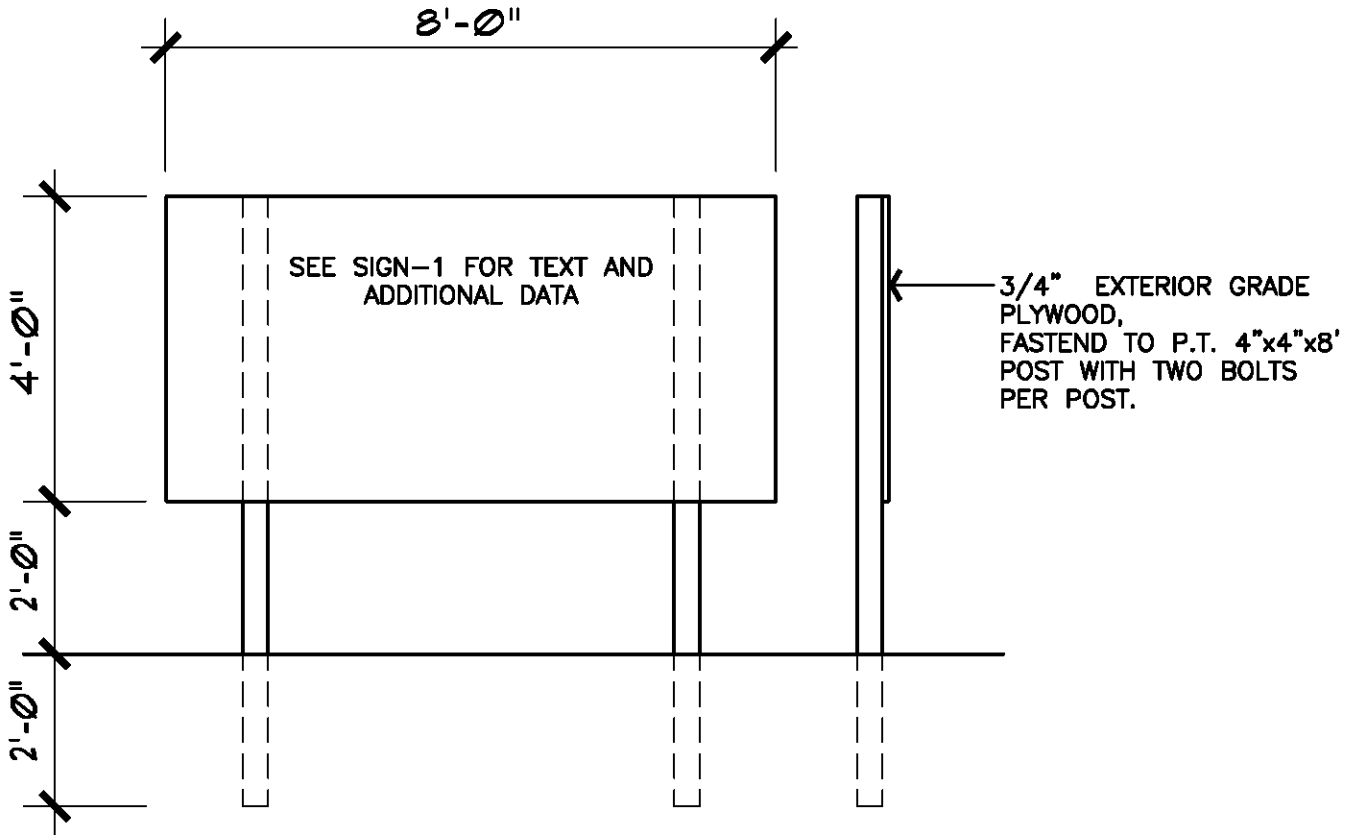

CITY OF TAMPA–PROJECT SIGN
REVISED 4/28/04

SIGN – 2

SPECIFICATIONS

WORKMANSHIP AND MATERIALS

SECTION 1 - EXCAVATION - EARTH AND ROCK

W-1.01 General

Opencut excavations shall be made to the widths and depths necessary for constructing all structures, pipelines and other conduits included in the Contract, according to the Plans, and includes the excavation of any material which, in the opinion of the Engineer, is desirable to be excavated for any purpose pertinent to the construction of the work. Banks more than 5 feet high, where a danger of slides or cave-ins exist, shall be shored or sloped to the angle of repose.

Where excavations are to be made below groundwater, the Contractor shall submit to the Engineer for approval, in detail, his proposed method for control of groundwater, including a description of the equipment he plans to use and the arrangement of such equipment. No such excavation shall be started until approval of the Engineer has been obtained. Dewatering work shall be included in the Contract Items for pipelines, box culverts, inlets, manholes and other structures, and pumping stations, and no separate payment will be made therefor.

W-1.02 Clearing

The site of all opencut excavations shall first be cleared of obstructions preparatory to excavation. This includes the removal and disposal of vegetation, trees, stumps, roots and bushes, except as specified under the subsection headed "Trench Excavation."

W-1.03 Authorized Additional Excavation

In case the materials encountered at the elevations shown are not suitable, or in case it is found desirable or necessary to go to an additional depth, or to an additional depth and width, the excavation shall be carried to such additional depth and width as the Engineer may direct in writing. The Contractor shall refill such excavated space with either Class D concrete, or select sand or crushed stone fill material, as ordered. Where necessary, fill materials shall be compacted to avoid future settlement. Additional earth excavations so ordered and concrete, or selected sand or crushed stone fill material ordered for filling such additional excavation and compaction of select sand or crushed stone fill material will be paid for under the appropriate Contract Items or where no such items exist, as extra work as specified in Article 7 of the Agreement.

W-1.04 Unauthorized Excavation

Wherever the excavation is carried beyond or below the lines and grades shown or given by the Engineer, except as specified in the subsection headed "Authorized Additional Excavation," all such excavated space shall be refilled with such material and in such manner as may be directed in order to ensure the stability of the various structures. Spaces beneath all manholes, structures or pipelines excavated without authority shall be refilled by the Contractor at his own expense, with Class D concrete, or select sand or crushed stone fill material, and properly compacted, as ordered

by the Engineer, and no separate payment will be made therefor.

W-1.05 Segregation and Disposal of Material

Topsoil suitable for final grading and landscaping and excavated material suitable for backfilling or embankments shall be stockpiled separately on the site in locations approved by the Engineer. Excavated and other material shall not be stored nearer than 4 feet from the edge of any excavation and shall be so stored and retained as to prevent its falling or sliding back into the excavation. Surplus excavated material and excavated material unsuitable for backfilling or embankments shall become the property of the Contractor and shall be transported, as approved by the Engineer, away from the site of the work to the Contractor's own place of disposal.

W-1.06 Shoring and Sheeting

All excavations shall be properly shored, sheeted, and braced or cut back at the proper slope to furnish safe working conditions, to prevent shifting of material, to prevent damage to structures or other work, and to avoid delay to the work, all in compliance with the U. S. Department of Labor Safety and Health Regulations for Construction promulgated under the Occupational Safety and Health Act of 1970 (PL 91-596) and under Section 107 of the Contract Work Hours and Safety Standards Act (PL 91-54). The minimum shoring, sheeting and bracing for trench excavations shall meet the general trenching requirements of the safety and health regulations. Before starting excavation for jacking pits and structures, the Contractor shall submit complete design calculations and working drawings of proposed sheeting and bracing arrangements which have been prepared, signed and sealed by a Professional Engineer registered in the State of Florida. Bracing shall be so arranged as not to place any strain on portions of completed work until the general construction has proceeded far enough, in the opinion of the Engineer, to provide ample strength. If the Engineer is of the opinion that at any point the sheeting or supports furnished are inadequate or unsuited for the purpose, he may order additional sheeting or supports to be installed. Whether or not such orders are issued, the sole responsibility for the design, methods of installation, and adequacy of the sheeting and supports shall be and shall remain that of the Contractor.

Tight sheeting shall be used in that portion of the excavation in City collector and arterial streets and in State and County highways below the intersection of a 1 on 1 slope line from the edge of the existing pavement to the nearest face of the excavation.

In general, sheeting for pipelines shall not be driven below the elevation of the top of the pipe. If it is necessary to drive the sheeting below that elevation in order to obtain a dry trench or satisfactory working conditions, the sheeting shall be cut off at the top of the pipe and left in place below the top of the pipe at no additional cost.

The sheeting and bracing shall be removed as the excavation is refilled in such a manner as to avoid the caving in of the bank or disturbance to adjacent areas or structures except as otherwise shown or directed. Voids left by the withdrawal of the sheeting shall be carefully filled by ramming or otherwise as directed.

Permission of the Engineer shall be obtained before the removal of any shoring, sheeting, or bracing. Such permission by the Engineer shall not relieve the Contractor from the responsibility

for injury or to other property or persons from failure to leave such sheeting and bracing in place.

W-1.07 Sheeting Left in Place

The Engineer may order, in writing, any or all sheeting or bracing to be left in place for the purpose of preventing injury to the structures or to other property or to persons, whether such sheeting or bracing was shown on the Plans or placed at his direction or otherwise. If left in place, such sheeting shall be cut off at the elevation ordered, but, in general, such cutoffs shall be at least 18 inches below the final ground surface. Bracing remaining in place shall be driven up tight.

The right of the Engineer to order sheeting and bracing left in place shall not be construed as creating any obligation on his part to issue such orders.

Sheeting and bracing left in place, by written order of the Engineer, will be paid for under the appropriate Contract Item if included in the Proposal or otherwise by provisions of extra work as specified in Section 7 of the Agreement.

W-1.08 Removal of Water

At all times during the excavation period and until completion and acceptance of the work at final inspection, ample means and equipment shall be provided with which to remove promptly and dispose of properly all water entering any excavation or other parts of the work. The excavation shall be kept dry. No water shall be allowed to rise over or come in contact with masonry and concrete until the concrete and mortar have attained a set satisfactory to the Engineer and, in any event, not sooner than 12 hours after placing the masonry or concrete. Water pumped or drained from the work hereunder shall be disposed of in a safe and suitable manner without damage to adjacent property or streets or to other work under construction. Water shall not be discharged onto streets without adequate protection of the surface at the point of discharge. No water shall be discharged into sanitary sewers. No water containing settleable solids shall be discharged into storm sewers. Any and all damage caused by dewatering the work shall be promptly repaired by the Contractor.

W-1.09 Structure Excavation

Excavations shall be of sufficient size and only of sufficient size to permit the work to be economically and properly constructed in the manner and of the size specified. The bottom of the excavation in earth and rock shall have the shape and dimensions of the underside of the structure wherever the nature of the ground will permit.

W-1.10 Trench Excavation

Before starting trench excavation, all obstructions which are to be removed or relocated shall be cleared away. Trees, shrubs, poles, and other structures which are to be preserved shall be properly braced and protected. All trees and large shrubs shall be preserved with damage to the root structure held to a minimum, unless otherwise shown or specified. Small shrubs may be preserved or replaced with equivalent specimens.

The width of trenches shall be such as to provide adequate space for workmen to place, joint, and backfill the pipe properly, but shall be kept to a minimum. Unless otherwise approved by the Engineer, the clear width of the trench at the level of the top of the pipe shall not exceed the sum of the outside diameter of the pipe barrel plus 24 inches.

In sheeted trenches, the clear width of the trench at the level of the top of the pipe shall be measured to the inside of the sheeting.

Should the Contractor exceed the maximum trench widths specified above, without written approval of the Engineer, he may be required to provide, at his own expense, concrete cradle or encasement for the pipe as directed by the Engineer, and no separate payment will be made therefor.

The Contractor shall excavate trenches to the respective depths, below the bottom of the pipe, for the various classes of pipe bedding shown on the Plans so that pipe bedding material can be placed in the bottom of the trench and shaped to provide a continuous, firm bearing for the pipe barrel and bells.

If unstable material is exposed at the level of the bottom of the trench excavation, it shall be excavated in accordance with the subsection headed "Authorized Additional Excavation." When in the judgement of the Engineer the unstable material extends to an excessive depth, he may advise the Contractor in writing to stabilize the trench bottom with a crushed stone, sand mat or gravel mat to ensure firm support for the pipe by other suitable methods. Payment for such trench stabilization will be made under the appropriate Contract Items or where no such items exist, as extra work as specified in Section 7 of the Agreement.

The open excavated trench preceding the pipe laying operation and the unfilled trench with pipe in place shall be kept to a minimum length causing the least disturbance to traffic and use of adjacent property. Ladders shall be provided and so located as to provide means of exit from the trench without more than 25 feet of lateral travel.

W-1.11 Rock Excavation

The term "rock" as used herein shall include all materials which have compressive strengths in excess of 300 psi in their natural undisturbed state and which, in the opinion of the Engineer, require drilling and blasting, wedging, sledging, barring or breaking with power tools not otherwise required for normal excavating.

Rock shall be excavated, within the boundary lines and grades as shown on the Plans, specified, or given by the Engineer. Rock removed from the excavation shall become the property of the Contractor and shall be removed by him away from the site of the work to his own place of disposal, and no separate payment will be made therefor.

All shattered rock and loose pieces shall be removed.

For trench excavation in which pipelines or other conduits are to be placed, the rock shall be excavated to a minimum depth of 6 inches below the bottom of the pipe and the excavated space refilled with pipe bedding material. Placing, compacting, and shaping pipe bedding material shall

be included in the various classified unit price Contract Items for pipelines, and no separate payment will be made therefor.

For manhole excavation, the rock shall be excavated to a minimum depth of 8 inches below the bottom of the manhole base for pipelines 24 inches in diameter and larger, and 6 inches below the bottom manhole base for pipelines less than 24 inches in diameter and the excavated space refilled with crushed stone. Placing, compacting, and shaping crushed stone for manhole bases shall be included in the appropriate Contract Items for manhole bases, and no separate payment will be made therefor.

For cast-in-place structures, the rock shall be excavated only to the bottom of the structure or foundation slab.

Excavated space in rock below structures, pipelines, and manholes which exceeds the depths specified above shall be refilled with Class D concrete, crushed stone, or other material as directed by the Engineer. Refilling of over-excavated rock in rock shall be included as part of the rock excavation, and no separate payment will be made therefor.

Where applicable, the requirements of the subsections on "Trench Excavation" and "Structure Excavation" shall be followed.

Blasting may be performed only when approved by the Engineer and authorized by the Agency having jurisdiction over the subject location and in accordance with all laws, ordinances, and regulations of the Agency.

W-1.12 Excavation for Jacking and Augering

Excavation for jacking or augering shall meet the requirements of the Workmanship and Materials section headed "Jacking and Augering."

* * *

SECTION 2 - BACKFILLING

W-2.01 General

All excavation shall be backfilled to the original surface of the ground or to such other grades as may be shown or directed. For areas to be covered by topsoil, backfill shall be left 4 inches below the finished grade or as shown on the Plans. The time elapsing before backfilling is begun shall be subject to the approval of the Engineer. In all backfilling, all compressible and destructible rubbish and refuse which might cause later settlement and all lumber and braces shall be removed from the excavated space before backfilling is started, except that sheeting and bracing shall be left in place or removed as the work progresses.

Construction equipment used to backfill against and over cast-in-place concrete structures shall not be permitted to travel over these structures until the designated concrete strength has been obtained as verified by concrete test cylinders. In special cases where conditions warrant, as determined by the Engineer, the above restriction may be modified if the concrete has gained sufficient strength, as determined from test cylinders, to satisfy design requirements for the removal of forms and the application of load.

W-2.02 Unsuitable Backfill Material

Before backfilling around structures, all rubbish shall be removed from behind the walls.

When the excavated material contains garbage, cinders, glass, tin cans, wood, or other trash or objectionable organic material, as determined by the Engineer, it shall not be used for backfill but shall be disposed of by the Contractor away from the site of the work to his own place of disposal. The unsuitable materials shall be replaced with backfill material which shall be sand, clay, gravel, sandy loam, or other excavated material free of objectionable organic matter, as approved by the Engineer.

W-2.03 Select Fill Material - General

Select fill material shall be used for pipe bedding, manhole bedding, trench and structure backfill, and other purposes as shown on the Plans, specified, and ordered in writing by the Engineer.

Select fill material shall be sand, conforming to the requirements of the subsections headed "Select Fill Material - Sand" or crushed stone or limestone screenings, conforming to the requirements of the subsection headed "Select Fill Material - Crushed Stone."

W-2.04 Select Fill Material - Sand

Sand used for pipe bedding or as select fill material for trench or structure backfill shall consist of job excavated sand or imported sand which can be readily and thoroughly compacted. Sand shall be reasonably well graded and shall fall within the following gradation limits:

Passing No. 4 sieve - 95 percent (minimum)
Passing No. 200 sieve - 10 percent (maximum)

Sand containing more than 10 percent of material passing the No. 200 sieve or sand which, in the opinion of the Engineer, would have a tendency to flow under pressure when wet will not be acceptable for use as pipe bedding or select fill material for trench or structure backfill

Sand shall not be used for bedding for manholes or other structures.

W-2.05 Select Fill Material - Crushed Stone

Crushed stone used for pipe bedding, manhole base bedding, or as select fill material for trench or structure backfill shall consist of clean, durable rock, angular in shape, which can be readily and thoroughly compacted. Crushed stone shall be reasonably well graded and shall be no greater than a No. 57 stone.

W-2.06 Pipe and Structure Bedding

All pipelines shall be bedded in well graded, compacted select fill material. Select fill material shall be sand, conforming to the subsection headed "Select Fill Material - Sand" and/or crushed stone, conforming to the subsection headed "Select Fill Material - Crushed Stone," as shown on the Plans, specified or ordered in writing by the Engineer. Pipe bedding shall be constructed in accordance with the details shown on the Plans.

When shown on the Plans or ordered in writing by the Engineer, pipelines (except PVC) shall be laid in Class D concrete cradle or encasement.

Precast concrete manhole bases shall be bedded on No. 57 stone, conforming to the subsection headed "Select Fill Material - Crushed Stone," as shown on the Plans.

Cast-in-place manhole bases and other foundations for structures shall be cast against undisturbed earth in clean and dry excavations.

Existing underground structures, tunnels, conduits and pipes crossing the excavation shall be bedded with compacted select fill material. Bedding material shall be placed under and around each existing underground structure, tunnel, conduit or pipe and shall extend underneath and on each side to a distance equal to the depth of the trench below the structure, tunnel, conduit or pipe.

W-2.07 Bedding Placement for Pipelines

Select fill material, used as pipe bedding, shall be placed by hand, in uniform layers not greater than 6 inches in loose thickness and thoroughly compacted in place. Select fill material pipe bedding shall extend to one foot over the top of the pipe.

Each layer of select fill shall be thoroughly tamped and compacted in place by hand or with suitable mechanical or pneumatic tools to a dry density not less than 95 percent of the maximum dry density as determined by AASHTO Des: T-180. No large stone fragments shall be placed in the pipe bedding nor closer than two feet to any point on any pipe.

W-2.08 Bedding Placement for Precast Concrete Manholes

No. 57 stone used for bedding beneath precast manhole bases shall be placed in uniform layers not greater than 6 inches in loose thickness and thoroughly compacted in place with suitable mechanical or pneumatic tools.

W-2.09 Structure Backfill

Backfill around manholes, risers, and structures shall be suitable job excavated material, selected fill material, or other material approved by the Engineer. Such backfill shall extend from the bottom of the excavation or top of structure bedding to the bottom of pavement base course, subgrade for lawn replacement, the top of the existing ground surface, or to such other grades as may be shown or given by the Engineer.

The backfill shall be placed in uniform layers not greater than 18 inches in loose thickness and thoroughly compacted in place with suitable mechanical or pneumatic tools to a dry density of not less than 98 percent of the maximum dry density as determined by AASHTO Des: T-180.

W-2.10 Trench Backfill

Trenches shall be backfilled from 1 foot over the top of the pipe to the bottom of pavement base course, subgrade for lawn replacement, to the top of the existing ground surface or to such other grades as may be shown or given by the Engineer. Trench backfill shall be select fill material, suitable job excavated material or other material, as approved by the Engineer.

Except under pavements and railroad tracks, trench backfill shall be placed in uniform layers not greater than 18 inches in loose thickness and thoroughly compacted in place using heavy-duty tampers such as pneumatic jackhammers with tamping foot attachment or vibrating rollers if required. Each layer shall be compacted to a dry density of not less than 95 percent of the maximum dry density as determined by AASHTO Des: T-180.

Where railroad tracks or pavements and appurtenances for streets or highways are to be placed over trenches, the trench backfill shall be placed in uniform layers not greater than 12 inches in loose thickness and thoroughly compacted in place with equipment as specified above. Each layer shall be compacted to a dry density of not less than 98 percent of the maximum dry density as determined by AASHTO Des: T-180. On City of Tampa streets, each layer shall be compacted as specified above to the bottom of the subbase which is defined as 10 inches below the bottom of the base course. The subbase shall be compacted to 98 percent of modified proctor.

Trench backfilling work shall be done in a manner to prevent dropping of material directly on top of any conduit or pipe through any great vertical distance. In no case shall backfilling material from a bucket be allowed to fall directly on a structure or pipe and in all cases, the bucket shall be lowered so that the shock of falling earth will not cause damage.

Lumps shall be broken up and if there are any stones, pieces of crushed rock or lumps which cannot be readily broken up, they shall be distributed throughout the mass so that all interstices are solidly filled with fine material.

W-2.11 Backfill for Short Tunnel

Where pipelines are placed in short tunnels, the annular space between the outside of the pipe wall and the tunnel wall shall be completely filled with select fill material or suitable excavated material. Pipelines in short tunnels shall be suitably supported, to permit placing backfill which shall be suitably tamped in place.

W-2.12 Finish Grading

Finish grading shall be performed to meet the existing contour elevations and grades shown on the Plans or given by the Engineer and shall be made to blend into adjacent natural ground surfaces. All finished surfaces shall be left smooth and free to drain.

Grading outside of pipelines or structure lines shall be performed in such a manner as to prevent accumulation of water within the area. Where necessary or where shown on the Drawings, finish grading shall be extended to ensure that water will be carried to drainage ditches, and the construction area left smooth and free from depressions holding water.

W-2.13 Responsibility for After Settlement

Any depression which may develop in backfilled areas from settlement within one year after the work is fully completed and accepted shall be the responsibility of the Contractor. The Contractor shall, at his own expense, provide as needed additional backfill material, pavement base replacement, permanent pavement sidewalk curb and driveway repair or replacement, and lawn replacement and shall perform the necessary reconditioning and restoration work to bring such depressed areas to proper grade as approved by the Engineer.

W-2.14 Inspection and Testing of Backfilling

All backfill shall be subject to test by the Engineer with the assistance of the Contractor. Testing for projects located at the Howard F. Curren Treatment Plant or projects related to pumping station rehabilitations shall be tested by an approved third party lab at the expense of the Contractor.

* * *

SECTION 6 - REINFORCING STEEL

W-6.01 Standards

Reinforcing steel bars for concrete reinforcement shall be deformed bars meeting the requirements of ASTM Des: A 615, Grade 60, unless shown or specified otherwise. They shall be free from defects, kinks, and from bends that cannot be readily and fully straightened in the field. Test certificates of the chemical and physical properties covering each shipment shall be submitted for approval.

Reinforcing mesh shall be of the electrically welded type, with wires arranged in rectangular patterns, of the sizes shown or specified and shall meet the requirements of ASTM A 185.

W-6.02 General

Reinforcing steel bars shall be supplied in lengths which will allow them to be conveniently placed in the work and provide sufficient lap at joints. Dowels of proper lengths, size, and shape shall be provided for tying walls, beams, floors, and the like together when shown, specified, or ordered.

Stirrups and ties shall have a minimum inside radius of bend of 2-1/2 bar diameters. All other bars No. 7 and smaller shall have a minimum inside radius of bend of 3 bar diameters, and No. 8 bars and larger shall have a minimum inside radius of bend of 4 bar diameters.

Splices in all reinforcements shall be lapped as specified hereinafter in "Table 1 - Grade 60 Reinforcing Bar Splice Lapping Lengths" unless shown or specified otherwise. All splices shall be staggered, unless otherwise approved by the Engineer.

TABLE 1 - GRADE 60
REINFORCING BAR SPLICE LAPPING LENGTHS

Bar Size	#3	#4	#5	#6	#7	#8	#9	#10	#11
Top Bars - ACI Class B	13	17	22	28	38	50	64	81	100
Top Bars - ACI Class C	17	23	29	37	50	66	83	106	130
Other Bars - ACI Class B	12	12	16	20	27	36	46	58	71
Other Bars - ACI Class C	12	16	20	26	36	47	60	75	93

Notes:

1. Splice length given in inches.

2. Top bars are all horizontal reinforcement so placed that more than 12 inches of concrete is cast in the member below the bar. This includes horizontal wall reinforcement.

3. Where lapping bars of different sizes, use lap required for larger bar.

4. For all bars spaced closer than 6 inches, increase lap length 25 percent.

5. Unless otherwise specified, the length of lap for splices shall be as shown for ACI Class B where no more than 50 percent of the bars are lap spliced, and as shown for ACI Class C where more than 50 percent of the bars are lap spliced.

W-6.03 Detailing

The Contractor shall submit detailed placing drawings and bar listed to the Engineer for approval in accordance with the requirements for "Working Drawings" of the General Provisions, except as otherwise specified herein.

All provisions of the latest ACI "Manual of Standard Practice for Detailing Reinforced Concrete Structures" shall be followed in the preparation of placing drawings and bar lists.

Wall and slab reinforcing shall not be billed in sections. Complete elevations of all walls and complete plans of all slabs must be shown, except that when more than one wall or slab are identical only one such elevation or plan will be required. These plans or elevations need not be true views of the walls or slabs shown. Every reinforcing bar in a slab or a wall shall be billed on either a plan or an elevation. Where necessary, sections shall be taken to clarify the arrangement of the steel reinforcement. All bars shall be identified on such sections, but in no case shall bars be billed on such sections.

For all reinforcing bars, unless the location of a bar is perfectly obvious, the location of such bar or bars shall be given by a dimension to some structural feature which must be readily distinguishable at the time bars are placed.

The set of placing drawings shall be complete in and by themselves to the extent that the bar setters will have no occasion to refer to the design drawings.

Before submittal to the Engineer, every placing drawing and bar list shall be completely checked including the quantity, size, type, length, bend dimensions, and type of support for all bars or mesh, and all other information on the drawing and list. The checking shall be done by a qualified person and all necessary corrections made.

If after placing drawings and bar lists have been submitted to the Engineer for approval, a partial or spot check by the Engineer reveals that the placing drawings obviously have not been checked by a qualified person, they will be returned to the Contractor for such a check and corrections, after which they shall be resubmitted for approval by the Engineer.

W-6.04 Delivery

Reinforcing steel shall be delivered to the work in bundles strongly tied, and each group of both bent and straight bars shall be identified with a metal tag giving the identifying number corresponding to the shop drawings and bar schedules. All bars shall be properly stored in an orderly manner, at least 12 inches off the ground and kept clean and protected from the weather, as directed by the Engineer, after delivery at the site of the work.

W-6.05 Protection

Reinforcing steel shall be delivered without rust other than that which may have accumulated during transportation to the work. It shall at all times be fully protected from moisture, grease, dirt, mortar, and concrete. Before being placed in position, it shall be thoroughly cleaned of all loose mill scale and rust and of any dirt, coatings, or other material that might reduce the bond. If there is a delay in depositing concrete, the steel shall be inspected and satisfactorily cleaned immediately before the concrete is placed.

W-6.06 Fabrication and Installation - Bars

Bars shall be cut to required length and accurately bent before placing. Bars shall be bent in the shop unless written approval of field bending is obtained from the Engineer. If field bending is permitted, it shall be done only when the air temperature where the bending operation is performed is above 30 degrees F.

The bars shall be placed in the exact positions shown with the required spacing and shall be securely fastened in position at intersections to prevent displacement during the placing of the concrete. The bars shall be fastened with annealed wire of not less than 18 gauge or other approved devices. Spacing chairs of a type approved by the Engineer shall be furnished and properly placed to support and hold reinforcing bars in position in all beams and slabs, including slabs placed directly on the subgrade. Chairs which rest on the forms for slabs, the underside of which will be exposed to view in the finished work, shall have those portions galvanized or plastic coated which come in contact with the forms.

Splices in all reinforcement shall be lapped as specified in "Table 1 - Grade 60 Reinforcing Bar Splice Lapping Lengths" in the subsection headed "General." Splices at points of maximum tensile stress shall be avoided wherever possible. Temperature bars shall have a minimum clear spacing of 2-1/2 diameters. All bar splices shall be staggered where possible.

All welded splices shall be full penetration, butt welds, made by certified welders in accordance with AWS D12.1. Thermite welding or Cadweld type couplers may be used where approved by the Engineer.

On any section of the work where horizontal bars run further than the length of the forms, the form or head against which the work ends shall be perforated at the proper places to allow the bars to project through a distance at least equal to the lap specified. The projecting ends, however, unless otherwise directed by the Engineer, shall be of different lengths so that in no place will laps in adjoining bars in the same place occur opposite each other.

W-6.07 Installation - Mesh

Reinforcing mesh shall be placed in the positions shown, specified, or required to fit the work. Suitable spacing chairs or supports as specified for bars shall be furnished and placed to maintain the mesh in correct location. Where a flat surface of mesh is required, the mesh shall be rolled or otherwise straightened to make a perfectly flat surface before placing. The length of laps not indicated shall be approved by the Engineer.

W-6.08 Concrete Protection for Reinforcing Steel

Reinforcing steel shall be placed and held in position so that the concrete cover, as measured from the surface of the bar to the surface of the concrete, shall be not less than the following, except as otherwise shown, specified, or directed:

1. General

   a. Concrete deposited directly against soil - 3 inches.
   b. Concrete in contact with soil or exposed to weather or sewage – 2 inches

2. Slabs (See Item 6)

   a. Top all surfaces - 2 inches

3. Beams - Girders - Columns (See Item 6)

   a. To main reinforcement - 2 inches
   b. To ties - 1-1/2 inches

4. Walls (See Item 6)

   a. 12 inches or more thick - 2 inches
   b. Less than 12 inches thick:
      (1) #6 bars or larger - 2 inches
      (2) #5 bars or smaller - 1-1/2 inches

5. Footings and Base Slabs

   a. Top face - 3 inches
   b. Sides and ends - 3 inches
   c. Bottom, Concrete deposited directly against ground - 3 inches
      Concrete deposited directly against lean concrete work mat - 2 inches

6. Add 1/2 inch for surfaces contacting or exposed to water or sewage.

7. Laps - as specified in "Table 1 - Grade 60 Reinforcing Bar Splice Lapping Lengths" in the subsection headed "General."

8. Spacing - clear distance between parallel bars - 2 inches minimum.

SECTION 11 - PVC PIPE GRAVITY

W-11.01 General

All pipe and fittings, 6"-27" nominal diameter, shall be solid wall Polyvinyl Chloride (PVC) Pipe MANUFACTURED to standards as outlined in the following sections.

All references to ASTM Designations shall include Manufacturing (PVC Cell Classification) and Performance (Inspection, Sampling and Testing) Specifications, and the most recent shall govern. Pipe and fittings meeting ONLY the Performance Test Specification will not be acceptable. The minimum nominal diameter for mainline pipe is 8 inches and for laterals is 6 inches. The maximum laying length shall be 13.0 feet.

W-11.02 Standards (6"-15" Diameter)

Solid wall PVC pipe shall comply with ASTM D 3034 and all applicable ASTM documents as covered in Section No. 2 of ASTM D 3034. All pipe and fittings shall be made of PVC plastic having cell classifications as outlined in Section No. 5 "Materials" of ASTM D 3034 and as defined in ASTM D 1784. For depths of cut through 18 feet, a minimum wall thickness of SDR-35 is required. For depths of cut greater than 18 feet, a minimum wall thickness of SDR-26 is required. Fittings shall be either integrally cast (factory molded) or factory solvent welded and a separate section from the mainline pipe. SDR-26 fittings shall be used with SDR-26 pipe.

W-11.03 Standards (18"-27" Diameter)

Solid wall PVC pipe and fittings shall comply with ASTM F 679 and all applicable ASTM documents as covered in Section No. 2 of ASTM F 679. All pipe and fittings shall be made of PVC plastic having cell classifications as outlined in Section No. 4 "Materials" of ASTM F 679 and as defined in ASTM D1784. All pipe and fittings shall meet the wall thickness and cell classification requirements of either T-1 or T-2 of Table 1 "Pipe Dimensions and Minimum Pipe Stiffness" of ASTM F 679. Fittings shall be either integrally cast (factory molded) or factory solvent welded and a separate section from the mainline pipe.

W-11.04 Joints (6"-27" Diameter)

Joints for solid wall PVC pipe and fittings shall be gasket, bell and spigot, push-on type. Joints shall be a molded integral part of the pipe section. Joints or couplings furnished loose shall not be permitted. Solvent cemented joints shall not be permitted. Lubricant shall be as recommended by the pipe manufacturer. (Assembly of gasketed joints is outlined in the Section "Joining of PVC Pipe").

Joints for pipe and for fittings shall comply with ASTM D 3212 "Joints for Drain and Sewer Plastic Pipes Using Flexible Elastomeric Seals." Elastomeric gaskets shall meet the requirements of ASTM F 477. Joints for pipe and fittings shall comply with ASTM D 3034 for 6"-15" diameter, ASTM F 679 for 18"-27" diameter, and ASTM F 1336 for 6"-27" diameter.

W-11.05 Pre-installation Tests, Reports, Markings and Submittals

All 6"-15" pipe and fittings shall be marked per Section No. 12 "Marking" of ASTM D 3034. All 18"-27" pipe and fittings shall be marked per Section 11 "Marking" of ASTM F 679. All required information shall be marked on the pipe. If in code, the markings shall be decoded in writing by letter to the City in advance.

PRIOR TO SHIPMENT of the pipe and fittings to the project site, the Contractor shall submit to the Engineer certifications as described below duly certified by the manufacturer's testing facility or an independent certified testing

laboratory demonstrating full compliance with the applicable ASTM specifications described above. Certification from the supplier is not acceptable.

An original plus four (4) copies of the following shall be submitted to the Engineer.

1. The name, address, and phone number of the pipe and fittings manufacturer and the location of the plant at which they will be manufactured.

2. A letter of certification stating that each lot of pipe used on this project has been manufactured, sampled, tested, and conforms to Section 8 "Test Methods" of ASTM D 3034 for 6"-15" diameter and Section 7 "Test Methods" of ASTM F 679 for 18"-27" diameter pipe. A letter of certification from the fittings manufacturer shall be provided stating that all fittings conform with ASTM D 3034 for 6"-15" diameter, ASTM F 679 for 18"-27" diameter, and ASTM F 1336 for 6"-27" diameter.

W-11.06 Bedding Requirements

Unless otherwise indicated on the Plans, solid wall PVC pipe shall be installed with Class "C" bedding as described in Section W-2 - Backfilling." If soil conforming to subsection W-2.04 "Select Fill Material-Sand" is not excavated at the project site, it shall be imported. Compaction requirements are described in subsection W-2.07 "Bedding Placement for Pipelines." In no case shall a concrete cradle be used. In the event the Plans call for or the Contractor opts to install crushed stone, it shall be NO GREATER THAN a #57 stone.

W-11.07 Post-installation Tests

SCOPE:

Prior to final acceptance of the project all PVC pipelines shall be leakage tested, deflection tested, and T.V inspected, all at the expense of the Contractor. The leakage test shall be performed by the Contractor or a Wastewater Department approved test lab after the subbase has been compacted. The Contractor or a Wastewater Department approved test lab shall perform the deflection testing. The deflection test shall be performed a minimum of 7 days after the base has been compacted and sealed. The Contractor shall perform the T.V. inspection only AFTER the pipelines have passed both the leakage and deflection tests.

DEFLECTION TESTING:

A deflection test shall be performed on all new gravity sewers to ensure that the pipe is not out of round, contains deflected or off-sets joints, or other defects. The Contractor shall have the option of testing for 5% deflection after the base has been compacted and sealed for a minimum of 7 days; or for 7½% deflection after the base has been compacted and sealed for a minimum of 30 days. The maximum installed deflection shall not exceed 5% or 7-1/2% of the base inside diameter of the pipe as listed in the following table:

INCHES

SDR-35

Nominal Size	Base Inside Diameter	5% Deflection after 7 days Mandrel	7-1/2% Deflection after 30 days Mandrel
8	7.665	7.28	7.09
10	9.563	9.08	8.85
12	11.361	10.79	10.51
15	13.898	13.20	12.86
		TYPE T-1	
18	16.976	16.13	15.70
21	20.004	19.01	18.50
24	22.480	21.36	20.79
27	25.327	24.06	23.43

SDR-26

Nominal Size	Base Inside Diameter	5% Deflection after 7 days Mandrel	7-1/2% Deflection after 30 days Mandrel
8	7.488	7.11	6.93
10	9.342	8.87	8.64
12	11.102	10.55	10.27
15	13.575	12.90	12.56
		TYPE T-2	
18	17.054	16.20	15.77
21	20.098	19.09	18.59
24	22.586	21.46	20.89
27	25.446	24.17	23.54

If the pipe fails the 7 day, 5% deflection test, the Contractor shall immediately conduct a 7-1/2% deflection test. If the pipe passes the 7-1/2% deflection test, the Contractor has the option of repairing that section at that time or waiting until a minimum of 30 days after the base has been compacted and sealed and then re-testing for a maximum of 7-1/2% deflection.

If the pipe fails the 7-1/2% deflection test after 7 days or at 30 days, the Contractor shall repair that section immediately.

If the Contractor performs the deflection testing rather than employing an approved test lab, the following shall apply:

The Contractor shall furnish the mandrel, labor, materials, and equipment necessary to perform the tests as approved by the Engineer. The mandrel shall be pulled through by HAND or a HAND operated reel in the presence of the Engineer. Prior to performing the deflection tests, the Contractor shall submit to the Engineer certification that the 9-arm mandrels are preset as stated above. Each mandrel shall be engraved with the following:

Serial Number
Nominal pipe diameter
Either "ASTM D 3034," year and either "SDR-35" or "SDR26"
or "ASTM F 679," year and either "Type T-1" or "Type T-2"
% deflection as stated above.

If the mandrel fails to pass any section of pipe, the Contractor shall excavate and make all repairs necessary to correct the excessive deflection. The Contractor shall then backfill, recompact, and reseal the permanent pavement base, and retest the line. If the mandrel fails to pass a second time, the section shall be replaced. Re-rounding is NOT permitted.

Leakage Testing

The Contractor or a reputable test lab shall perform either an infiltration, exfiltration or an air leakage test as authorized by the Engineer. If the groundwater level is two (2) feet or more above the crown of the pipe, an infiltration test must be performed. The Contractor shall notify the Engineer of the date and time of the test a minimum of 5 days prior to the test.

The infiltration/exfiltration tests shall be performed as described in Section W-18.

AIR TESTING - The minimum time duration permitted for pressure drops of 1.0 psi and 0.5 psi are shown in Tables I and II on the following page and are based on a maximum allowable exfiltration rate of 0.0015 cu. ft./min./sq. ft. of internal pipe surface. Derivations may be found in the Uni-Bell PVC Pipe Association publication: "Recommended Practice for Low-Pressure Air Testing of Installed Sewer Pipe," UNI-B-6-85. (Available from Uni-Bell, 2655 Villa Creek Drive, Suite 155, Dallas, Texas 75234.

The test shall commence after the plugged line has reached a stabilized gauge pressure of 4.0± 1/2 psi. Air testing equipment shall be arranged so that it is located at the ground surface and shall have an approved air relief arrangement to prevent the sewer from being pressurized to greater than 9.0 psig.

If the pressure drops 1.0 psig (or 0.5 psig) before the appropriate time shown in Table I (Page W11-8) or Table II (Page W11-9) has elapsed, the line has failed. In such case, the Contractor shall structurally repair or replace all defective materials and/or workmanship to the satisfaction of the Engineer.

Sealants are NOT permitted. The completed pipe installation shall then be retested.

The lengths of lateral sewers may be ignored for computing required test times. In the event a test section (mainline and laterals), having a combined total internal surface area less than 625 square feet, fails to pass the air test when laterals have been ignored; the test time may be reduced per Section 9.4 of UNI-B-6-85. If the reduced test time is short enough to allow the section to pass, the computations shall be included with the test results.

TV Inspection

All completed gravity sewers shall be subject to two TV inspections. The first TV inspection shall be

performed after the new gravity sewer has passed both the leakage test and the deflection test. An additional TV inspection shall be performed eleven (11) months from the date the City has accepted the wastewater facilities. The inspection shall be used to identify deficiencies such as cracked pipe, leaking joints, damaged connections, and depressions or dip in the pipe alignment (see below for allowable dips). Any deficiencies identified by the inspections shall be repaired by the Contractor at no cost to the City.

The TV inspections shall be completed by the Contractor or a private company that specializes in TV inspection. The TV inspected shall be completed by means of a closed-circuit color television. Prior to the inspection of newly constructed collection systems, water shall be run through the pipeline so that depressions or dips can be identified during the inspection. TV inspections shall be completed in accordance with Section W-72 TV Inspection.

If the TV inspection identifies standing water in the pipe revealing a depression or dip in the pipe alignment, the magnitude of the depression shall be approximated by a means approved by the City. Approved methods include attaching a cylinder, disc, or ball of distinct size in front of the camera during the inspection. For example, if a 1" diameter disc is utilized and is totally submerged during the inspection, the depression is approximated to be greater than 1-inch. Listed below is the allowable depth of depression for the various pipe sizes. Depressions exceeded the allowable limits shall be repaired by the Contractor at no cost to the City.

Pipe Diameter	Minimum Dip for Failure
8" – 10"	**1.0"**
12" – 16"	**1.5"**
18" – 24"	**2.0"**

W-11.08 Joining of PVC Pipe

The assembly of gasketed joints shall be performed as recommended by the pipe manufacturer. In all cases, clean the gasket and bell, especially the groove area and the spigot area with a rag, brush, or paper towel to remove any dirt or foreign material before the assembly. Lubricant shall be applied as specified by the pipe manufacturer.

Align the spigot to the bell and insert the spigot into the bell until it contacts the gasket uniformly. Apply firm steady pressure either by hand or by bar and block assembly until the spigot easily slips through the gasket.

If undue resistance to insertion of the pipe end is encountered or the reference mark does not position properly, disassemble the joint and check the position of the gasket. If it is twisted or pushed out of its seat ("fish-mounted"), inspect components, repair or replace damaged items, clean the components, and repeat the assembly steps. Be sure both pipe lengths are in concentric alignment. If the gasket was not out of position, verify proper location of the reference mark.

To join field-cut pipe, first square cut the pipe end. Use a factory-finished beveled end as a guide for proper bevel angle and depth of bevel plus the distance to the insertion reference mark. Bevel the end using a pipe beveling

tool or a wood rasp which will cut the correct taper. Round off any sharp edges on the leading edge of the bevel.

W-11.10 Joining PVC Pipe to Clay Pipe

The joining of PVC to clay pipe shall be accomplished with flexible compression couplings. Couplings shall include stainless steel shear rings and stainless steel compression bands. Such couplings shall meet the requirements of ASTM Des: C 425, ASTM C1173 and shall be Series No. 1002 flexible polyvinyl chloride couplings with stainless steel compression bands and shear rings as manufactured by Fernco Joint Sealer Co., Ferndale, Michigan; Band-Seal couplings as manufactured by Mission Clay Products Corp., Whittier, California; or equal. Installation of flexible couplings shall be done in accordance with the manufacturer's instructions.

After the joint has been completed, any voids in the excavation beneath the coupling shall be thoroughly tamped full of granular fill material to provide a full bearing for the pipe and prevent excessive pressure on the bottom of the joint.

W-11.11 Joining PVC Pipe to Ductile Iron Pipe

The joining of PVC pipe to ductile iron pipe shall be accomplished with rigid PVC C900 x SDR-35 adapter couplings. Such couplings shall be molded of PVC material meeting ASTM D-1784 specifications. Joints shall meet ASTM D-3213 requirements with gaskets conforming to ASTM F-477. The adapter couplings shall be manufactured by Harco, Lynchburg, Virginia, or equal. Installation of rigid couplings shall be done in accordance with the manufacturer's instructions.

After the joint has been completed, any voids in the excavation beneath the coupling shall be thoroughly tamped full of granular fill material to provide a full bearing for the pipe and prevent excessive pressure on the bottom of the joint.

W-11.12 Connection to Manholes

The Contractor will be required to submit a shop drawing, detailing the method of connecting the proposed pipe to the manhole and making it watertight. For connecting PVC pipe, the Contractor shall use a flexible rubber boot, precast into the manhole. The boot shall have stainless steel bands to compress and seal to the proposed pipe or shall be a compression type, such as A-Lock.

Should the flexible rubber boot need to be relocated when connecting to an existing manhole, the Contractor shall perform the connection by one of two methods. The preferred method is to core the manhole and install a rubber boot. The rubber boot shall be manufactured by Kor-n-Seal, or equal. The boot shall be installed and the PVC pipe connection shall be in accordance with the manufacturer's instructions. If the manhole cannot be cored or if the manhole is constructed of brick, the connection shall be made with a PVC manhole adapter which has an exterior impregnated silica surface layer. The adapter shall be manufactured by GPK Products, Inc., Fargo, North Dakota, or equal. The adapter shall be installed and grouted into the manhole wall in accordance with the manufacturer's instructions with non-shrink grout. The PVC pipe shall be inserted through the adapter.

W-11.13 Storage of PVC Pipe

Pipe shall be stored at the job site in unit packages provided by the manufacturer. Caution shall be exercised to avoid compression, damage, or deformation to bell ends of the pipe. When unit packages of PVC pipe are stacked, ensure that the weight of upper units does not cause deformation to pipe in lower units.

PVC pipe unit packages shall be supported by racks or dunnage to prevent damage to the bottom during storage. Supports shall be spaced to prevent pipe bending.

PVC pipe shall not be stored close to heat sources or hot objects such as heaters, boilers, steam line, engine exhaust, etc.

When unit packages of PVC pipe are stacked, ensure that the height of the stack does not result in instability which could cause stack collapse, pipe damage, bodily injury, and property damage.

The interior as well as all sealing surfaces or pipe, fittings, and other accessories shall be kept free from dirt and foreign matter.

Gaskets shall be protected from excessive exposure to heat, direct sunlight, ozone, oil and grease.

W-11.14 Handling of PVC Pipe - Standard Procedures

When using fork lifts or other handling equipment, prevent damage to PVC pipe.

When handling PVC pipe, avoid severe impact blows, abrasion damage and gouging or cutting by metal surfaces or rocks. Avoid stressing bell joints and damage of bevel ends.

Pipe shall be lowered, not dropped, from trucks and into trenches.

In preparation for pipe installation, placement (stringing) of pipe shall be as close to the trench as practical and on the opposite side from excavated earth. Bell ends shall point in the direction of work progress.

The Engineer may reject any pipe that shows visible signs of damage resulting from poor storage and handling practices.

TABLE I

SPECIFICATION TIME REQUIRED FOR A 1.0 PSIG PRESSURE DROP
FOR SIZE AND LENGTH OF PIPE INDICATED FOR Q = 0.0015

Pipe Diameter (in)	Minimum Time (min:sec)	Length for Minimum Time (ft)	Time for Longer Length (sec)	Specification Time for Length (L) Shown (min:sec)							
				100 ft	150 ft	200 ft	250 ft	300 ft	350 ft	400 ft	450 ft
4	3:46	597	.380 L	3:46	3:46	3:46	3:46	3:46	3:46	3:46	3:46
6	5:40	398	.854 L	5:40	5:40	5:40	5:40	5:40	5:40	5:42	6:24
8	7:34	298	1.520 L	7:34	7:34	7:34	7:34	7:36	8:52	10:08	11:24
10	9:26	239	2.374 L	9:26	9:26	9:26	9:53	11:52	13:51	15:49	17:48
12	11:20	199	3.418 L	11:20	11:20	11:24	14:15	17:05	19:56	22:47	25:38
15	14:10	159	5.342 L	14:10	14:10	17:48	22:15	26:42	31:09	35:36	40:04
18	17:00	133	7.692 L	17:00	19:13	25:38	32:03	38:27	44:52	51:16	57:41
21	19:50	114	10.470 L	19:50	26:10	34:54	43:37	52:21	61:00	69:48	78:31
24	22:40	99	13.674 L	22:47	34:11	45:34	56:58	68:22	79:46	91:10	102:33
27	25:30	88	17.306 L	28:51	43:16	57:41	72:07	86:32	100:57	115:22	129:48
30	28:20	80	21.366 L	35:37	53:25	71:13	89:02	106:50	124:38	142:26	160:15
33	31:10	72	25.852 L	43:05	64:38	86:10	107:43	129:16	150:43	172:21	193:53
36	34:00	66	30.768 L	51:17	76:55	102:34	128:12	153:50	179:29	205:07	230:46

TABLE II

SPECIFICATION TIME REQUIRED FOR A 0.5 PSIG PRESSURE DROP
FOR SIZE AND LENGTH OF PIPE INDICATED FOR Q = 0.0015

Pipe Diameter (in)	Minimum Time (min:sec)	Length for Minimum Time (ft)	Time for Longer Length (sec)	Specification Time for Length (L) Shown (min:sec)							
				100 ft	150 ft	200 ft	250 ft	300 ft	350 ft	400 ft	450 ft
4	1:53	597	.190 L	1:53	1:53	1:53	1:53	1:53	1:53	1:53	1:53
6	2:50	398	.427 L	2:50	2:50	2:50	2:50	2:50	2:50	2:51	3:12
8	3:47	298	.760 L	3:47	3:47	3:47	3:47	3:48	4:26	5:04	5:42
10	4:43	239	1.187 L	4:43	4:43	4:43	4:57	5:56	6:55	7:54	8:54
12	5:40	199	1.709 L	5:40	5:40	5:42	7:08	8:33	9:58	11:24	12:50
15	7:05	159	2.671 L	7:05	7:05	8:54	11:08	13:21	15:35	17:48	20:02
18	8:30	133	3.846 L	8:30	9:37	12:49	16:01	19:14	22:26	25:38	28:51
21	9:55	114	5.235 L	9:55	13:05	17:27	21:49	26:11	30:32	34:54	39:16
24	11:20	99	6.837 L	11:24	17:57	22:48	28:30	34:11	39:53	45:35	51:17
27	12:45	88	8.653 L	14:25	21:38	28:51	36:04	43:16	50:30	57:42	46:54
30	14:10	80	10.683 L	17:48	26:43	35:37	44:31	53:25	62:19	71:13	80:07
33	15:35	72	12.926 L	21:33	32:19	43:56	53:52	64:38	75:24	86:10	96:57
36	17:00	66	15.483 L	25:39	38:28	51:17	64:06	76:55	89:44	102:34	115:23

SECTION 15 - LAYING AND JOINTING PIPE FOR FORCE MAINS AND SEWERS

W-15.01 General

The installation, delivery, transportation, unloading, and stringing of pipes, fittings, and accessories for force mains and sewers shall be done in accordance with AWWA C600 for ductile iron pipe and ASTM Des: C 12 for clay and concrete pipe and ASTM D 2321 and pipe manufacturer's recommendations for PVC pipe, as modified or supplemented by the specifications of this section and by the details shown on the Plans.

Proper and suitable tools and appliances for the safe and convenient cutting, handling, and laying of the pipe and fittings shall be used.

Suitable fittings shall be used where shown and at connections where grade or alignment changes require offsets greater than those recommended by the pipe manufacturer.

Pipes and fittings shall be thoroughly cleaned before they are laid and shall be kept clean until they are accepted in the completed work.

All lines shall be closed off with bulkheads when pipe laying is not in progress.

Before being laid, all pipe and specials shall be thoroughly examined for defects, and no piece shall be installed which is known to be defective. If any defective piece should be discovered after having being installed, it shall be removed and replaced with a sound one in a satisfactory manner by the Contractor at his own expense.

Pipe shall be thoroughly cleaned before it is laid and shall be kept clean until it is accepted in the completed work. Special care shall be exercised to avoid leaving bits of wood, dirt, and other foreign particles in the pipe. If any such particles are discovered before the final acceptance of the work, they shall be removed and the pipe cleaned at the Contractor's expense.

Pipe laying for sewers shall begin at the low end of a run and proceed upgrade. Generally, all such pipe shall be laid with bells or grooves pointing uphill. Each pipe shall be carefully placed and checked for line and grade.

Adjustments to bring pipe to line and grade shall be made by scraping away or filling in granular material under the body of the pipe, but in no case by wedging or blocking up the barrel. The faces of the spigot ends and the bells shall be brought into fair contact, and the pipe shall be firmly and completely shoved home. As the work progresses, the interior of the pipelines shall be cleaned of all dirt and superfluous materials of every description. All lines shall be kept absolutely clean during construction. Pipelines shall be laid accurately to line and grade.

Gaskets for pipe joints shall be stored in a cool place and protected from light, sunlight, heat, oil, or grease until installed. Any gaskets showing signs of checking, weathering, or other deterioration will be rejected.

Pipe shall be of the types, sizes, and classes shown on the Plans or as listed in the Contract Items.

Each piece of pipe shall be inspected and cleaned before it is lowered in the trench and any lumps or projections on the face of the spigot or tongue end or the shoulder shall be cut away. No cracked, broken, or defective pieces shall be used in the work.

Concrete pipe manufactured with a plastic sheet liner shall be laid so that the liner is on the crown of the pipe and placed symmetrically about the vertical centerline of the pipe.

Pipe laying will be permitted only in dry trenches having a stable bottom. Where groundwater is encountered, the Contractor shall make every effort to secure an absolutely dry trench bottom.

If, in the opinion of the Engineer, the Contractor has failed to obtain an absolutely dry trench bottom by improper or insufficient use of all known methods of trench dewatering, the Engineer may then order the Contractor to excavate below grade and place sufficient selected fill material, crushed stone, or Class D concrete over the trench bottom at the Contractor's own expense.

If all efforts fail to obtain this condition and the Engineer determines that the trench bottom is unsuitable for pipe foundation, he will order in writing the kind of stabilization to be constructed.

W-15.02 Transportation and Delivery

Every precaution shall be taken to prevent injury to the pipe during transportation and delivery to the site. Extreme care must be taken in loading and unloading the pipe and fittings. Such work must be done slowly with skids or suitable power equipment, and the pipe shall be under perfect control at all times. Under no condition shall the pipe be dropped, bumped, dragged, pushed, or moved in any way which will cause damage to the pipe or coating. When handling the pipe with a crane, a suitable pipe hook or sling around the pipe shall be used. Under no condition shall the sling be allowed to pass through the pipe unless adequate measures are taken to prevent damage to the pipe ends.

If in the process of transportation, handling, or laying, any pipe or special is damaged, such pipe or pipes shall be replaced or repaired by the Contractor at his own expense.

The Contractor shall furnish and install suitable blocking and stakes so as to prevent the pipe from rolling. The type of blocking and stakes, and the method of installation, shall be approved by the Engineer.

W-15.03 Pipe Laying - Trenches

Pipelines shall be laid in trench excavation on bedding material as specified under the Workmanship and Materials section headed "Backfilling," Class D concrete cradle or other foundations as shown on the Plans, specified, or ordered in writing by the Engineer. The pipe shall be properly secured against movement and pipe joints shall be made in the excavation as required.

The pipe bedding shall be carefully graded, compacted, and formed to fit the bottom quadrant of the pipe. Bell holes shall be cut out for each joint as required to permit the joint to be properly made and allow the barrel of the pipe to have full bearing throughout its length.

Where pipelines are laid in Class D concrete cradle or encasement, the installation shall conform to the requirements of the Workmanship and Materials section headed "Pipe Cradles and Encasements."

Pipelines laid on other type foundations shall be installed as specified for such other foundations or as directed in writing by the Engineer.

W-15.04 Lateral Detection Tape

Detectable underground marking tape shall be installed over all laterals from the edge of pavement to the property line. The tape shall be Lineguard encased aluminum foil, or equal. The 2-inch wide tape shall be APWA green and reverse printed bearing the identification of the sewer line below it and a warning such as "CAUTION."

The tape shall be buried 4-6 inches. After trench backfilling, the tape shall be placed in the backfill and allowed to settle into place with the backfill.

W-15.05 Mechanical Joints for Ductile Iron Pipe

In making up mechanical joints, the spigot shall be centered in the bell. The surface with which the rubber gasket comes in contact shall be cleaned thoroughly and the gasket shall be washed thoroughly with soapy water just prior to assembly of the joint. The gasket and gland shall be placed in position, the bolts inserted, and the nuts tightened fingertight. The nuts then shall be tightened by means of a torque wrench in such a manner that the gland shall be brought up evenly into the joint. The following range of bolt torques shall be applied:

Bolt Size Inches	Range of Torque Foot-Pounds
5/8	45 - 60
3/4	75 - 90
1	80 - 100
1-1/4	105 - 120

If effective sealing is not obtained at the maximum torque listed above, the joint shall be disassembled and reassembled after a thorough cleaning.

All bolts and nuts shall be field coated with a bituminous coating after assembly of the joint.

W-15.06 Push-on Joints for Ductile Iron Pipe

In making up push-on joints, the gasket seat in the socket shall be cleaned thoroughly and

the rubber gasket shall be wiped clean with a cloth. The gasket shall be placed in the socket and a thin film of lubricant shall then be applied to the inside surface of the gasket that will come in contact with the entering pipe. The plain end of the pipe to be entered shall be cleaned thoroughly and placed in alignment with the bell of the pipe to which it is to be joined. The joint shall be made up by exerting sufficient force on the entering pipe so that its plain end is moved past the gasket until it makes contact with the base of the socket.

W-15.07 Joining Clay Pipe

The joining of clay pipe with flexible plastic joints shall be done in accordance with the manufacturer's instructions. The joint surface on both the bell and spigot ends shall be wiped clean and coated with a lubricant furnished by the manufacturer to facilitate assembly. The spigot end shall be inserted in the bell and pressure applied sufficient to seat the pipe properly. After the joint has been completed, any voids in the excavation beneath the spigot shall be thoroughly tamped full of granular fill material to provide a full bearing for the pipe and prevent excessive pressure on the bottom of the joint.

W-15.08 Joining of PVC Pipe-Gravity

The assembly of gasketed joints shall be performed as recommended by the pipe manufacturer. In all cases clean the gasket and bell, especially the groove area and the spigot area, with a rag, brush or paper towel to remove any dirt or foreign material before the assembly. Lubricant shall be applied as specified by the pipe manufacturer.

Align the spigot to the bell and insert the spigot into the bell until it contacts the gasket uniformly. Apply firm steady pressure either by hand or by bar and block assembly until the spigot easily slips through the gasket.

If undue resistance to insertion of the pipe end is encountered or the reference mark does not position properly, disassemble the joint and check the position of the gasket. If it is twisted or pushed out of its seat ("rolled"), inspect components, repair or replace damaged items, clean the components, and repeat the assembly steps. Be sure both pipe lengths are in concentric alignment. If the gasket was not out of position, verify proper location of the reference mark.

To join field-cut pipe, first square cut the pipe end. Use a factory-finished beveled end as a guide for proper bevel angle and depth of bevel plus the distance to the insertion reference mark. Bevel the end using a pipe beveling tool or a wood rasp which will cut the correct taper. Round off any sharp edges on the leading edge of the bevel.

W-15.09 Joining Concrete Pipe

Before joining concrete pipe using flexible rubber gaskets, the joint surfaces of both the bell and spigot (tongue and groove) ends shall be wiped clean. Any lumps, projections, burrs, or chips which would interfere with the proper compression of the gasket shall be repaired. The spigot or tongue end with the gasket in place and with all surfaces lubricated as recommended by the manufacturer, shall be inserted into the bell or groove. Pressure shall be applied to seat the pipe properly in the bell or groove. Voids under the pipe shall be tamped full of granular material to

provide full bearing for the pipe.

Curves for reinforced concrete pipe sewers shall be constructed with standard pipe where the opening of the joint on the outside of the curve is less than 1/2 inch. Where greater opening of the joint would be required, the curves shall be constructed using beveled or radius pipe with standard joints.

Curves for reinforced concrete pressure pipe or prestressed concrete pipe shall be constructed with standard pipe sections, where the opening of the joint on the outside of the curve is less than 1/2 inch, or with beveled pipe, precast elbows or combination of these methods.

W-15.10 Concrete Pipe Rubber Gasket Joints

Rubber gaskets shall be of the O-ring type or equivalent cross section approved by the Engineer. The composition and properties of the gaskets for gravity flow sewers shall meet the requirements of ASTM Des: C 443.

Composition and properties for concrete pressure pipe gaskets shall meet the requirements of the specifications for the concrete pressure pipe with which the gasket will be used.

In making O-ring rubber gasketed joints, the gasket and the pipe socket shall be lubricated with an approved rubber gasket lubricant, and the gasket shall be stretched over the spigot and placed accurately in position. The tongue or spigot end shall be carefully centered in the socket of the preceding pipe so as to avoid displacement of the gasket, and the pipe shall be drawn home fully compressing the gasket. Adjustments to line and grade shall be made in such a manner that the compressed rubber gasket will not be disturbed. Before proceeding with backfilling, the joint shall be felt completely around to determine whether the gasket is in its proper position. If the gasket can be felt out of place, the pipe shall be withdrawn and the gasket examined for cuts or breaks. If the gasket has been damaged, it shall be replaced with a new one before the pipe is replaced.

Rubber gaskets shall be stored in a cool place and protected from light, sunlight, heat, oil, or grease until installed. Any gaskets showing signs of checking, weathering, or other deterioration will be rejected.

W-15.11 Temporary Bulkheads

At the ends of contract sections, where adjoining pipelines have not been completed, and in connections built into pipelines where adjoining pipelines or structures have not been completed and are not ready to be connected, temporary bulkheads, approved by the Engineer, shall be built. Such bulkheads encountered in connecting sewers or structures included in the Contract, or pipelines or structures previously built, shall be removed by the Contractor when the need for them has passed or when ordered by the Engineer.

W-15.12 Testing

The testing of pipelines shall be done in accordance with the requirements of the Workmanship and Materials section headed "Leakage Tests."

W-15.13 Joining Different Types (Clay, PVC, or Ductile Iron) of Pipe

The joining of clay pipe to ductile iron pipe or clay pipe to PVC pipe, shall be accomplished with flexible compression couplings. Couplings shall include stainless steel shear rings and stainless steel compression bands. Such couplings shall meet the requirements of ASTM DES: C 425, ASTM C1173 and shall be Series No. 1002 flexible polyvinyl chloride couplings with stainless steel compression bands and shear rings as manufactured by Fernco Joint Sealer Co., Ferndale, Michigan; Band-Seal couplings as manufactured by Mission Clay Products Corp., Whittier, California; or approved equal. After the joint has been completed, any voids in the excavation beneath the coupling shall be thoroughly tamped full of granular fill material to provide a full bearing for the pipe and prevent excessive pressure on the bottom of the joint.

The joining of SDR-35 or SDR-26 PVC pipe to ductile iron or C-900 PVC pipe, shall be accomplished with rigid PVC C900 x SDR-35 adapter couplings. Such couplings shall be molded of PVC material meeting ASTM D-1784 specifications. Joints shall meet ASTM D-3213 requirements with gaskets conforming to ASTM F-477. The adapter couplings shall be manufactured by Harco, Lynchburg, VA, or equal. Installation of rigid couplings shall be done in accordance with the manufacturer's instructions. After the joint has been completed, any voids in the excavation beneath the coupling shall be thoroughly tamped full of granular fill material to provide a full bearing for the pipe and prevent excessive pressure on the bottom of the joint.

W-15.14 Connection to Manholes

The Contractor will be required to submit a shop drawing, detailing the method of connecting the proposed pipe to the manhole and making it watertight:

1. For connecting vitrified clay or ductile iron pipe, the Contractor shall use nonshrink grout to seal the opening between the pipe O.D. and manufactured opening in the manhole or flexible rubber boot, precast into the manhole. The boot shall have stainless steel bands to compress and seal to the proposed pipe or shall be a compression type, such as A-Lock.

2. For connecting PVC pipe, the Contractor shall use a flexible rubber boot, precast into the manhole. The boot shall have stainless steel bands to compress and seal to the proposed pipe or shall be a compression type, such as A-Lock. Should the flexible rubber boot need to be relocated or when connecting to an existing manhole, the Contractor shall perform the connection by one of two methods. The preferred method is to core the manhole and install a rubber boot. The rubber boot shall be manufactured by Kor-n-Seal, or equal. The boot shall be installed and the PVCP connection shall be in accordance with the manufacturer's instructions. If the manhole cannot be cored or if the manhole is constructed of brick, the connection shall be made with a PVC manhole adapter which has an exterior impregnated silica surface layer. The adapter shall be manufactured by GPK Products, Inc., Fargo, ND, or equal. The adapter shall be installed and grouted into the manhole wall in accordance with the manufacturer's instructions with nonshrink grout. The PVCP shall be inserted through the adapter.

W-15.15 Joint Grouting

Joints for concrete pipelines using rubber gaskets and steel end rings shall be grouted on the outside with cement mortar composed of one part Type IA portland cement to one part sand by volume. The materials shall be thoroughly mixed to produce a uniform mortar with all aggregate particles well coated.

The joint grouting shall not advance closer than two pipe lengths to the laying operations. In grouting the joint, a cloth diaper shall be used to encase the outside diameter of the bell of the pipe and adequately straddle the joint recess so as to keep out dirt and to serve as a form for grouting. The joint space shall be filled with cement mortar, just thin enough to run around the joint. The diaper is to be left in place permanently. Before the mortar has taken its initial set, the diaper shall be examined, and if not completely filled, additional mortar shall be forced into the joint.

* * *

SECTION 16 - RESTORATION OF STREET PAVEMENTS

W-16.01 General

The various street surfaces disturbed, damaged, or destroyed during the performance of the work under this Contract shall be restored and maintained as shown, specified, and directed. Included in this classification are permanent pavement surfaces of all types, pavement bases, curb, curb and gutter, alleys, driveways, and sidewalks.

The quality of workmanship and materials used in the restoration shall produce a street surface equal to or better than the condition before the work began.

Service boxes, manhole frames and covers, and similar structures not conforming to the new work shall be set to established grade at the Contractor's expense, and no separate payment will be made therefor.

All portland cement and asphaltic concrete pavements shall be removed in rectangular sections with sawed vertical cuts, or to existing joints, as directed by the Engineer. Concrete pavements shall be cut with a concrete saw. Asphaltic concrete pavements one-inch thick or greater shall be cut with a tool having a square neat edge. The edges of adjacent pavement shall be trimmed to straight lines which a roller can follow. Where reinforced concrete pavement is removed, one foot of existing reinforcement on each side of the excavation shall be left exposed and tied to the replaced reinforcing steel.

The equipment necessary for the proper performance of pavement replacement shall be on the site in satisfactory working condition and shall be subject to approval of the Engineer before the work is started.

All replaced concrete pavements shall have a minimum bearing on undisturbed earth outside the line of excavations of at least nine (9) inches.

W-16.02 Standards

The restoration of street pavement shall be performed in strict conformance with the standards relating to equipment, materials, and methods of construction of the authority having jurisdiction over the pavements, unless otherwise specified herein. Pavements to be restored are under the jurisdiction of the several agencies as follows:

1. State Highways are under the jurisdiction of the State of Florida Department of Transportation. Work on such pavements shall conform to the Department of Transportation Standard Specifications for Road and Bridge Construction.

2. City Streets are under the jurisdiction of the City of Tampa Department of Public Works. Work on such pavements shall conform to the Florida Department of Transportation Standard Specifications for Road and Bridge Construction, latest edition, except that densities (including for subgrade) and other testing

requirements shall follow current Department of Public Works specifications, and except that Sections 330 and 331 shall be modified as shown in this Section. The type and thickness of pavement, base and stabilization shall be as shown, specified, and directed by the Engineer.

3. County Roads are under the jurisdiction of the Hillsborough County Engineering Department. Work on such pavements shall conform to County specifications.

All specifications of the several agencies having jurisdiction over pavement restoration work shall be the current issue of such specifications as of the date of the "Notice to Bidders," except as specified otherwise herein.

W-16.03 Temporary Restoration

Upon completion of backfilling, the street or sidewalk surface damaged or destroyed shall be promptly placed in condition for safe temporary use. Temporary work shall be maintained in a suitable and safe condition for traffic until the permanent pavement is laid, or until final acceptance of the work.

Where the area over which existing pavement has been disturbed is to be repaved as part of an overall project by the agency having jurisdiction, any special temporary pavement replacement shall be as specified in the "Specific Provisions."

Pavement surfaces shall be temporarily restored by placing thereon, to proper line, grade and transverse profile, a layer or layers of compacted limerock conforming to all requirements regarding configuration, thickness, and density as detailed in the Plans, specified, and directed by the Engineer. When the compacted thickness of the limerock layer is greater than 6 inches, the base shall be constructed in multiple courses. Each course shall not exceed 6 inches in compacted thickness. Where the existing pavement has a permanent wearing surface, the temporary pavement shall be finished with a suitable grade of asphalt and sand to provide a temporary wearing course and to eliminate dust nuisance.

Curbs, where possible, shall be temporarily reset in place, as part of the work of temporary restoration of pavement.

Damaged or destroyed sidewalks shall be temporarily restored, immediately upon placing of the backfill, by placing a compacted layer of fine crushed limestone, choked with limestone screenings, which shall have a minimum thickness of three inches below the existing finished sidewalk grade.

The temporary pavement shall be maintained by the Contractor and all holes and depressions filled until the permanent pavement is placed.

Limerock or shell placed in areas where the existing pavement is shell, limerock, crushed stone, or other similar material and is classed as nonpermanent pavement, will not be measured for separate payment. Placement of limerock or shell as nonpermanent pavement replacement will be included for payment under the various classified Unit Price Contract Items for pipelines.

Temporary sand and asphalt wearing courses placed on limerock base on which a permanent pavement surface will be constructed shall be incidental to the permanent pavement base work, and no separate payment will be made therefor.

Limestone screenings for temporary sidewalk surface shall be incidental to sidewalk replacement, and no separate payment will be made therefor.

Limerock base placed in areas to receive a permanent pavement surface will be measured for payment under the appropriate Contract Item for permanent pavement base.

W-16.04 Preparation of Temporary Pavement for Permanent Pavement Replacement

After due notice and within the time specified, the temporary limerock pavement shall be prepared as the base to receive the new permanent pavement surface.

Prior to construction of the pavement base, the City will furnish the Contractor with the preconstruction survey notes for the streets disturbed by construction. The Contractor shall use these notes in bringing the base installed to grade allowing for the permanent pavement surface to be constructed.

The preparation of the base shall consist of bringing the area to be replaced to a grade conforming to the required grade and cross section, of uniform density, ready to receive the permanent pavement. This is to be accomplished by excavating or backfilling as needed, shaping, watering as required, or permitting to dry to proper consistency, and rolling the entire area with an approved self-propelled roller weighing not less than eight tons. Shaping and rolling shall be continued until the base has been properly prepared and shows that no further compaction of any practical benefit would result from continued rolling. The base shall be tested as to cross section, crown, and elevation. After being properly prepared, it shall be so maintained until the permanent pavement is constructed. Any part of the base area not accessible to the roller shall be thoroughly compacted by hand or by mechanical compaction in a manner acceptable to the Engineer. Preparation shall include sawing, cutting and trimming edges of existing pavements to provide a neat, uniform edge to abut the new pavement.

After completion of the base, the Contractor shall furnish the Engineer with survey notes verifying the base has been constructed to grade. Upon approval, payment will be made for permanent pavement base.

W-16.05 Certification for Limerock for Pavement Base

The Contractor shall furnish notarized certifications from all suppliers of limerock stating that all limerock supplied for use as pavement base conforms to the requirements of the applicable sections of the Florida Department of Transportation Standard Specifications for Road and Bridge Construction.

W-16.06 Permanent Pavement Base Densities

Permanent base material shall be installed and compacted to the required densities (98% modified proctor) in layers not exceeding six inches.

W-16.07 Permanent Pavement Surface Restoration

Permanent restoration of pavement shall be pavement of the type and thickness detailed in the Plans, Specific Provisions, or as directed by the Engineer.

If the existing type of pavement is classified as nonpermanent pavement, the temporary restoration shall be reworked and completed and left in a condition at least equivalent to the existing nonpermanent pavement.

W-16.08 Replacement of Curb, Curb and Gutter, Sidewalk and Driveways

All permanent restoration of street curb or curb and gutter shall be of the same type and thickness as the curb or curb gutter which abuts. The grade of the restored curb and curb and gutter shall conform with the grade of the existing adjacent curb or curb and gutter.

Except as otherwise specified herein or detailed in the Plans, all permanent restoration of driveways and sidewalks shall conform to the manner of construction as originally placed and to the lines and grades as given by the Engineer. No patching of concrete driveway areas will be allowed between joints or dummy joints.

Where sidewalks are replaced, the replacement shall be the full width of the walk and minimum lengths shall be 60 inches. Restoration of adjacent lawn is incidental to sidewalk replacement, and no separate payment will be made therefor.

W-16.09 Replacement of Traffic Markings and Signalization Loops

The Contractor shall furnish all labor, equipment and materials to replace, test and maintain all traffic markings (temporary and permanent) and signalization loops removed or damaged by pipeline construction and appurtenance work as shown on the Plans, specified and directed by the Engineer.

The replacement of traffic markings (temporary and permanent), signalization loops and all appurtenant work shall be replaced by the Contractor in kind.

It shall be the Contractor's responsibility to field verify before construction begins all markings and signalization loops to be replaced.

All traffic markings and signalization loops shall conform to the Workmanship and Materials standards set forth in the latest edition of the Florida Department of Transportation Standard and Supplemental Specifications.

Payment for the replacement of temporary and permanent traffic markings, signalization loops and all appurtenant work shall be included in the unit bid price for Permanent Pavement Surface Replacement, Asphaltic Concrete, and no separate payment shall be made therefor.

W-16.10 Hot Bituminous Mixtures (Section 330) Type S Asphaltic Concrete (Section 331)

This Subsection shall Replace and/or Modify Portions of F.D.O.T. Standard Specifications for Road and Bridge Construction (1991) Sections 330 and 331.

330-10.3 Density Control

330-10.3.1 Density Control Nuclear Method:

The inplace density of each course of asphalt mix construction, with the exceptions of patching courses, leveling and intermediate courses less than 1 inch thick or a specified spread rate less than 100 pounds per square yard, overbuild courses where the minimum thickness is less than 1 inch, and open-graded friction courses, shall be determined by the use of the Nuclear Density Backscatter Method as specified by FM 1-T238 (Method B). The required density of a completed course shall be at least 95% of the job mix design laboratory density submitted by the Contractor and approved by the construction engineer or 96% of the laboratory density which results from a sample of the same day's productions and determined by the City laboratory performing all acceptance testing.

330-10.3.2 Control Strips:

Control strips may be constructed by the Contractor for the purpose of determining the necessary pattern of compacting procedures to achieve the density requirements specified. However, control strips are not used for the validity of acceptance testing.

330-10.3.3 Lots:

For the purpose of acceptance and partial payments, each day's production will be divided into lots. The standard lot size shall be 500 linear feet and consist of one sublot with its appropriate test per every 100 linear feet of any pass made by the paving train, regardless of the width or thickness of the course being laid. Any partial lot will be redefined as a whole lot and the evaluation of it will be based on its sublot test determinations.

For the standard lot (500 linear feet), five density determinations - one for each sublot - will be made at random locations within the lot, but not to be taken within one foot of any unsupported edge.

For the Contractor to receive full payment for density, the average density of a lot will be a minimum of 95% of the submitted and approved job mix design laboratory density or 96% of the same day sampled laboratory density performed by the City laboratory performing acceptance testing. To calculate the average density of a lot, the lowest sublot test will be discarded and the remaining four sublots will be averaged. Once the average density of a lot has been determined, the Contractor will not be permitted to provide additional compaction to raise the average. The average density will be rounded off according to City standards.

330-10.3.4 Acceptance:

The completed pavement will be accepted with respect to density on a lot basis. Partial

payment will be made for those lots that have an average density less than the specified 95% of the approved job mix design laboratory density or 96% of the same day sampled laboratory density based on the following table:

City of Tampa Revised Table 330-3
Payment Schedule for Density

Percent of Control Strip Density	Percent of Payment
95.0 (job mix design)$_1$ or 96.0 (lab density sample)$_2$ & above	100
94.0 to < 95.0$_1$ or 96.0$_2$	95

Percent of Control Strip Density	Percent of Payment
93.0 to < 94.0 (Applies to both $_1$ & $_2$)	90
< 93.0 (Applies to both $_1$ & $_2$)	75

330-10.3.5 Density Requirements for Small Projects:

For projects less than 500 linear feet in length including intersections, turnouts, patches, crossings, etc., the requirements for specified densities are the same as a standard lot. For the purpose of acceptance and partial payment determination, the project less than 500 linear feet will be considered as a lot in its entirety and payment will apply accordingly with Table 330-3. The Contractor will use standard rolling procedures in 330-10.

331-5 Acceptance of the Mixture

331-5.1 General:

The bituminous mixture will be accepted at the site with respects to a gradation and asphalt content on a lot to lot basis. The material will be tested for acceptance in accordance with the provisions of 6-8.2 and the following requirements. However, any load or loads of mixture which, in the opinion of the City representative, are found unacceptable for reasons of being excessively segregated, aggregates improperly coated, or of excessively high or low temperature shall be rejected for use in the work. The composition and physical test properties for all mixes must meet the specification ranges provided in Tables 331-1 and 331-2.

A standard size lot at the site shall consist of one day's placement or equivalent to a standard quantity of 1,000 tons. The number of samples required to evaluate the lot will be divided into one or two sublots as indicated below. Testing for acceptance of the lot will be performed by the City material testing laboratory or by a licensed private testing laboratory of the City's choice. Quantities between 500 tons and 1,000 tons shall have 2 sublots; quantities between 50 tons and 500 tons shall have 1 sublot; quantities up to 50 tons will be accepted by the City representative on the basis of visual inspection.

331-5.2 Acceptance Procedures:

Sample selection for acceptance tests will be by random sampling of loaded trucks on site at the discretion of the City testing technician in accordance with FM-T168. The use of a random sample chart may be used but it is not required. Sampling shall not be taken in any of the following circumstances:

1) First load produced that day.
2) Last load produced that day.
3) Near end of quantity reached because of an underrun.

The Contractor and/or the plant quality control technician (Q.C.T.) will be notified of the time of sampling and may:

1) Observe the sampling.
2) Take a sample at the same time and run the tests.
3) Ask for a split sample and run the tests.
4) Observe the City testing technician run the tests.

The five acceptance determinations made from the sample are:

1) The % bitumen content per F.M.I. - T164.
2) The % passing the No. 4 sieve per F.M.I. - T030.
3) The % passing the No. 10 sieve per F.M.I. - T030.
4) The % passing the No. 40 sieve per F.M.I. - T030.
5) The % passing the No. 200 sieve per F.M.I. - T030.

For each acceptance sample taken, the technician will box and keep two split portions for referee tests. If the lot receives 100% payment, the referee sample will be discarded. If the lot sample shows a pay reduction, then one or both of the referee samples will be submitted for a second analysis to determine the validity of the acceptance test results. Referee samples will be tested by a licensed private laboratory of the City's choice. This second analysis will only be done at the request of the Contractor and will be paid for by the Contractor in the event that the original analysis results requiring a pay reduction is confirmed.

In the event that the second analysis does not confirm the pay reduction, the City will pay for the second analysis.

Acceptance of the mixture shall be on the basis of test results on consecutive random samples from each lot. One random sample shall be taken from each sublot. (The bituminous mixture will be sampled at the site in accordance with FM 1-T168.) The percent bitumen content of the mixture will be determined in accordance with FM 1-T164 (as modified by DOT test procedures). The percents passing the No. 4, No. 10 and No. 200 sieves will be determined in accordance with FM 1-T030.

Calculations for the acceptance test results for bitumen content and gradation (percent pass No. 4, percent pass No. 10, percent pass No. 40 and percent pass No. 200) shall be shown to the nearest hundredth (0.01). Calculations for arithmetic averages shall be carried to the thousandths

(0.001) and rounded to the nearest hundredth (0.01) in accordance with the Department's rules of rounding.

When the Contractor or producer chooses to use a storage bin for mix storage overnight or longer, the material processed in this manner will be sampled and tested for acceptance after the mix has been removed from the storage bin. The City representative may reject a mix at any time that is obviously defective due to asphalt content, insufficiency of mixing, inadequacy of coating, improper proportions of fine and coarse aggregates, temperature, contamination, etc. The Contractor and/or the L.Q.C.T. will be given the option of not placing the mix and sampling the following truck, or if it has been placed, sample it. The City reserves the right to test or have the mix tested by a licensed private testing laboratory of their choice. Payment will be made on the basis of the City's revised Table 331-6 "Acceptance Schedule of Payment."

City of Tampa Revised Table 331-6
Acceptance Schedule of Payment
(Asphalt Plant Mix Characteristics)

Characteristics	Factor	Deviation of the Arithmetic Average of the Lot Acceptance Tests from Job Mix Formula: One Test	Two Tests	
Asphalt Cement Content (Extraction)		1.00	0.00 - 0.55	0.00 - 0.43
		0.95	0.56 - 0.65	0.44 - 0.50
		0.90	0.66 - 0.75	0.51 - 0.57
		0.80*	Over 0.75	Over 0.57
No. 4 Sieve**		1.00	0.00 - 8.00	0.00 - 5.95
		0.95	8.01 - 9.00	5.96 - 6.66
		0.90	9.01 -10.00	6.67 - 7.36
		0.80	Over 10.00	Over 7.36
No. 10 Sieve**		1.00	0.00 - 6.50	0.00 - 5.04
		0.95	6.51 - 7.50	5.05 - 5.74
		0.90	7.51 - 8.50	5.75 - 6.45
		0.80*	Over 8.50	Over 6.45
No. 40 Sieve**		1.00	0.00 - 5.50	0.00 - 4.62
		0.95	5.51 - 6.50	4.63 - 5.33
		0.90	6.51 - 7.50	5.34 - 6.04
		0.80*	Over 7.50	Over 6.04
No. 200 Sieve**		1.00	0.00 - 2.00	0.00 - 1.71
		0.95	2.01 - 2.40	1.72 - 1.99
		0.90	2.41 - 2.80	2.00 - 2.04
		0.80*	Over 2.80	Over 2.04

* If approved by the City, the Contractor may accept the indicated partial pay. The City may require removal and replacement at no cost. The Contractor has the option to remove and replace at no cost to the City at any time.

** When there are two or more reduced payments for these items in one lot of material, only the greatest reduction in payment will be applied. CAUTION: This rule applies only to these four gradation test results.

Note: 1) The No. 40 sieve applies only to Types S-I, S-II, S-III, FC-1, and FC-4.
2) Deviations are absolute value with no plus or minus signs.

* * *

SECTION 27 - DEMOLITION

W-27.01 General

Demolition includes all work necessary for the removal and disposal of masonry, steel, reinforced concrete, sheet metal fencing/retaining wall, riprap retaining wall, granite curb retaining wall, plain concrete, wastewater equipment, piping, electrical facilities, and any other material or equipment shown or specified to be removed. Dust control shall be provided and provision made for safety.

Demolition shall be carried out in such a manner that adjacent structures, which are to remain, shall not be endangered. The work shall be scheduled so as not to interfere with the day to day operation of the existing facilities, all in accordance with the Sequence of Operations specified in the Specific Provisions. Doorways or passageways in existing facilities shall not be blocked.

Care shall be taken to assure that concrete shall be broken and removed in reasonably small masses. Where only parts of a structure are to be removed, the concrete shall be cut along limiting lines with a specially designed saw so that damage to the remaining structure is held to a minimum.

Where appropriate, the existing granite curb retaining wall, riprap retaining wall, and any and all other concrete structures and/or materials within the existing project area should be demolished, retained on site, crushed on site, and used as material for the stone within the Gabion Basket Retaining Walls and Reno Mats lining the ditch bottom.

W-27.02 Requirements Prior to Demolition

The Contractor shall visit the site and inspect all existing structures. Special care shall be taken to observe and record any defects, which may exist in buildings or structures adjacent to but not directly affected by the demolition work. Prior to commencing the demolition, the Contractor shall provide the Engineer with a copy of this inspection.

Drawings of existing structures and equipment will be available for inspection by the Contractor at the office of the Engineer and Owner.

Warning signs, protection barriers and red warning lights shall be provided as necessary adjacent to the work as approved by the Engineer and shall be maintained during the demolition period.

Demolition work shall not be undertaken until all mechanical and electrical services affected by the work have been properly disconnected. Interconnecting piping or electrical services that are to remain in service either permanently or temporarily shall be capped, rerouted or reconnected in a manner that will not interfere with the operation of the remaining facilities.

Where the presence of hazardous chemicals, gases, flammable materials or other dangerous substances is apparent or suspected, testing and purging shall be performed and the hazard eliminated before demolition is started.

W-27.03 Requirements During Demolition

The use of explosives will not be permitted.

All mechanical and electrical equipment shall be carefully protected against dust and debris.

All debris shall be removed from the structures during demolition and not allowed to accumulate in piles.

Safe access to and egress from all working areas shall be provided at all times with adequate protection from falling material.

Adequate scaffolding, shoring, bracing and protective covering shall be provided during demolition to protect personnel and equipment against injury or damage. Floor openings not used for material drops shall be covered with material substantial enough to support any loads placed on it. The covers shall be properly secured to prevent accidental movement.

Adequate lighting shall be provided at all times during demolition.

Areas below demolition work shall be closed to workmen while removal is in progress.

No material shall be dropped to any point lying outside the exterior walls of the structure unless the area is effectively protected.

No workmen shall stand on any wall to remove material except when adequate staging or scaffold protection is provided at a distance not exceeding 12 feet below the top of such walls and other reasonable precautions are taken. Whenever a workman is required to work at a height of more than 12 feet above a floor, platform, scaffold or the ground, he shall be equipped with a safety belt with a life line attached.

W-27.04 Disposal of Materials

All debris, rubbish, scrap pieces, equipment, and materials resulting from the demolition shall become the property of the Contractor and shall be removed from the site, except for the items designated by the Engineer to be salvaged.

SECTION 30 - MISCELLANEOUS PIPE AND FITTINGS

W-30.01 General

Miscellaneous pipe and fittings include polyvinyl chloride (PVC) pipe, copper pipe, steel pipe, and plastic tubing.

W-30.02 Polyvinyl Chloride Pipe

Polyvinyl chloride (PVC) pipe shall be Schedule 80 minimum meeting the requirements of ASTM Des: D 1785, 1254B. All joints and fittings shall be threaded except where flanged joints are shown or required for connection to other piping. Threaded PVC fittings shall be socket welding type, 150-pound class, conforming to ASTM Des: D 2467 and D 2657.

W-30.03 Copper Pipe

Copper pipe shall be Type K or L hard-drawn copper tubing and shall meet the requirements of ASTM Des: B 88.

Fittings shall be of the streamlined, solder joint type, and shall meet the requirements of ANSI Specifications B16.22.

W-30.04 Steel Pipe

Steel pipe shall be galvanized, meet the requirements of ASTM Des: A 53 and shall not be less than Schedule 40. Dimensions of steel pipe shall conform to ANSI B36.10.

Fittings for steel pipe shall be galvanized and shall be made to standard dimensions or as shown. Fittings used in pipelines 2 ☐ inches in di
and shall be of malleable iron meeting the requirements of ASTM Des: A 197. The fittings shall conform to ANSI B 16.3. Where galvanized fittings are shown or specified, galvanizing shall meet the requirements of ASTM Des: A 120. Steel flange fittings shall meet the requirements of ANSI B 16.5 for 150-pound standard, except that the flanges shall be plain faced.

All flanges for steel pipe, except blind flanges, shall be of the slip-on welding type with hubs meeting the requirements of AWWA C207 Class B, D, or E suitable for the size of pipe and test pressures specified, and conforming to the requirements of ASTM Des: A 181, Class 1. The flanges shall be attached to the barrel of the pipe with two continuous fillet welds. The flanges shall be attached to the barrel of the pipe with two continuous fillet welds. Blind flanges shall be plain faced and shall conform to ANSI B 16.5, Class 150. All flanges shall be covered and protected during delivery and storage.

Flanged joints shall be made with bolts or bolt studs with a nut on each end. Bolts, stud bolts, and nuts shall meet the requirements of ASTM Des: A 307, Grade B and ANSI B 16.1 unless noted otherwise on the Plans.

Gaskets for flanged joints shall be of rubber with cloth insertion of the full face type meeting the requirements of ANSI B 16.21 and shall be those made by the Garlock Packing Company, Crane Company, U.S. Rubber Company, or equal. Gaskets shall be 1/16 inch thick.

Zinc for galvanizing, zinc coating, and plating shall meet the requirements of ASTM Des: B 6 and shall be at least equal to the grade designated as "Prime Western."

Wrought metals and castings shall be sandblasted or ground smooth. When a smooth coat is required, castings shall be tumbled and all high spots ground flush. Castings shall be normalized to prevent cracking.

Base metal shall be thoroughly cleaned, using only approved solvents and wire brushes, after which it shall be pickled.

Products to be galvanized shall be safeguarded against embrittlement in accordance with ASTM Des: A 143 and against warpage and distortion in accordance with ASTM Des: A 384.

Galvanizing shall be done by the hot-dip process after fabrication, unless otherwise specified in conformance with the appropriate ASTM and American Hot Dip Galvanizers Association, Inc. specifications. The dipping shall not come in contact with or rest upon the dross during the operation.

Galvanizing and coating shall be done in a plant having sufficient facilities to produce the quality of coatings herein specified and ample capacity for the volume of work required. Galvanized material shall be shipped and handled in a manner which will avoid damage to the zinc coating.

Galvanizing shall meet the requirements of ASTM Des: A 120.

W-30.05 Plastic Tubing

Plastic tubing for the air supply line shall be clear vinyl instrument grade tubing with an inside diameter of 3/8 inch and a minimum wall thickness of 0.062 inch. The tubing shall be FAST & TIGHT, Formula PV-2 as manufactured by Parker Hannifin, Kent, Ohio, or equal.

W-30.06 Workmanship

Working drawings, delivery, erection, testing, insulation, and disinfection of miscellaneous pipe and fittings shall meet the applicable portions of similar requirements for ductile iron pipe specified under the respective sections of Workmanship and Materials.

* * *

SECTION 105 - ROOT PRUNING

W-105.01 General

The Contractor shall make provisions for tree protection to the satisfaction of the Engineer prior to any excavation. All applicable site inspections by the City of Tampa Parks Department, and permits, shall be obtained prior to commencing work.

The Contractor shall provide root pruning services as directed by the Engineer.

W-105.02 Performance of Work

All root pruning shall be performed by a qualified, licensed tree professional as approved by the Engineer.

All roots designated to be removed shall be severed leaving a smooth, uniform section at the remaining root end to prevent root damage.

Root pruning shall be performed with a chain saw, Dosco root pruner, or equal, as approved by the Engineer. Root pruning shall not occur within 6 feet of the base of the tree without guidance from Parks Department staff, and no excavation shall occur inside the circumference of the root-pruned area.

SECTION 108

DEWATERING

108.1 General.

108.1.1 Dewatering Performance: Design, furnish, install, test, operate, monitor, and maintain dewatering system of sufficient scope, size, and capacity to control hydrostatic pressures and to lower, control, remove, and dispose of ground water and permit excavation and construction to proceed on dry, stable subgrades.

1. Delegated Design: Design dewatering system, including comprehensive engineering analysis by a qualified, Florida-licensed professional engineer, using performance requirements and design criteria indicated.
2. Continuously monitor and maintain dewatering operations to ensure erosion control, stability of excavations and constructed slopes, that excavation does not flood, and that damage to subgrades and permanent structures is prevented.
3. Prevent surface water from entering excavations by grading, dikes, or other means.
4. Accomplish dewatering without damaging existing buildings, structures, and site improvements adjacent to excavation.
5. Remove dewatering system when no longer required for construction.

108.1.2 Submittals:

108.1.2.1 Shop Drawings (for dewatering system): Show arrangement, locations, and details of wells and well points; locations of risers, headers, filters, pumps, power units, and discharge lines; and means of discharge, control of sediment, and disposal of water.

1. Include layouts of piezometers and flow-measuring devices for monitoring performance of dewatering system.
2. Include a written plan for dewatering operations including control procedures to be adopted if dewatering problems arise.

108.1.2.2 Delegated-Design Submittal: For dewatering system indicated to comply with performance requirements and design criteria, including analysis data signed and sealed by the qualified professional engineer responsible for their preparation.

108.1.2.3 Qualification Data: For qualified installer and professional engineer.

108.1.2.4 Field Quality-Control Reports

108.1.2.5 Videotape: Show existing conditions (prior to, during, and after construction) of adjoining construction and site improvements that might be misconstrued as damage caused by dewatering operations.

108.1.3 Quality Assurance:

108.1.3.1 Installer Qualifications: An experienced installer that has specialized in dewatering work.

108.1.3.2 Regulatory Requirements: Comply with governing EPA notification regulations before beginning dewatering. Comply with hauling and disposal regulations of authorities having jurisdiction.

108.1.3.3 Preinstallation Conference: Conduct conference at the project site. Review methods and procedures related to dewatering including, but not limited to, the following:

1. Inspection and discussion of condition of site to be dewatered including coordination with temporary erosion control measures and temporary controls and protections.
2. Geotechnical report.
3. Proposed site clearing and excavations.
4. Existing utilities and subsurface conditions.
5. Coordination for interruption, shutoff, capping, and continuation of utility services.
6. Construction schedule. Verify availability of installer's personnel, equipment, and facilities needed to make progress and avoid delays.
7. Testing and monitoring of dewatering system.

108.1.4 Project Conditions:

108.1.4.1 Interruption of Existing Utilities: Do not interrupt any utility serving facilities occupied by the City or others unless permitted under the following conditions and then only after arranging to provide temporary utility according to requirements indicated:

1. Notify the City and the utility owner no fewer than two (2) days in advance of proposed interruption of utility.
2. Do not proceed with interruption of utility without City's and utility owner's written permission.

108.1.4.2 Project Site Information: A geotechnical report has been prepared for this Project and is available for information only. The opinions expressed in this report are those of the geotechnical engineer and represent interpretations of subsoil conditions, tests, and results of analyses conducted by the geotechnical engineer. The City will not be responsible for interpretations or conclusions drawn from this data. Make additional test borings and conduct other exploratory operations necessary for dewatering.

108.1.4.3 Survey Work: Engage a qualified, Florida-licensed land surveyor to survey adjacent existing buildings, structures, and site improvements, establishing exact elevations at fixed points to act as benchmarks. Clearly identify benchmarks and record existing elevations. During dewatering, regularly resurvey benchmarks, maintaining an accurate log of surveyed elevations for comparison with original elevations. Promptly notify City if changes in elevations occur or if cracks, sags, or other damage is evident in adjacent construction.

108.2 Execution.

108.2.1 Preparation:

108.2.1.1 Protect structures, utilities, sidewalks, pavements, and other facilities from damage caused by settlement, lateral movement, undermining, washout, and other hazards created by dewatering operations.

1. Prevent surface water and subsurface or ground water from entering excavations, from ponding on prepared subgrades, and from flooding site and surrounding area.
2. Protect subgrades and foundation soils from softening and damage by rain or water accumulation.

108.2.1.2 Install dewatering system to ensure minimum interference with roads, streets, walks, and other adjacent occupied and used facilities. Do not close or obstruct streets, walks, or other adjacent occupied or used facilities without permission from the City and authorities having jurisdiction. Provide alternate routes around closed or obstructed traffic ways if required by authorities having jurisdiction.

108.2.1.3 Provide temporary grading to facilitate dewatering and control of surface water.

108.2.1.4 Monitor dewatering system continuously.

108.2.1.5 Promptly repair damages to adjacent facilities caused by dewatering.

108.2.1.6 Protect and maintain temporary erosion and sedimentation controls during dewatering operations.

108.2.2 Installation:

108.2.2.1 Install dewatering system utilizing wells, well points, or similar methods complete with pump equipment, standby power and pumps, filter material gradation, valves, appurtenances, water disposal and surface water controls. Space well points or wells at intervals required to provide sufficient dewatering. Use filters or other means to prevent pumping of fine sands or silts from the subsurface.

108.2.2.2 Before excavating below ground-water level, place system into operation to lower water to specified levels. Operate system continuously until drains, sewers, and structures have been constructed and fill materials have been placed or until dewatering is no longer required.

108.2.2.3 Provide an adequate system to lower and control ground water to permit excavation, construction of structures, and placement of fill materials on dry subgrades. Install sufficient dewatering equipment to drain water-bearing strata above and below bottom off foundations, drains, sewers, and other excavations. Do not permit open-sump pumping that leads to loss of fines, soil piping, subgrade softening, and slope instability.

108.2.2.4 Reduce hydrostatic head in water-bearing strata below subgrade elevations of foundations, drains, sewers, and other excavations. Maintain piezometric water level a minimum of 24 inches below surface of excavation.

108.2.2.5 Dispose of water removed by dewatering in a manner that avoids endangering public health, property, and portions of work under construction of completed. Dispose of water and sediment in a manner that avoids inconvenience to others. Provide sumps, sedimentation tanks, and other flow-control devices as required by authorities having jurisdiction.

108.2.2.6 Provide standby equipment on site, installed and available for immediate operation, to maintain dewatering on continuous basis if any part of system becomes inadequate or fails. If dewatering requirements are not satisfied due to inadequacy or failure of dewatering system, restore damaged structures and foundation soils at no additional expense to the City. Remove dewatering system from project site on completion of dewatering. Plug or fill well holes with sand or cut off and cap wells a minimum of 36 inches below overlying construction.

108.2.2.7 Damages: Promptly repair damages to adjacent facilities caused by dewatering operations.

108.2.3 Field Quality Control

108.2.3.1 Observation Wells: Provide, take measurements, and maintain at least the minimum number of observation wells or piezometers indicated in the dewatering plan; additional observation wells may be required by authorities having jurisdiction.

1. Observe and record daily elevations of ground water and piezometric water levels in observation wells.
2. Repair or replace, within 24 hours, observation wells that become inactive, damaged, or destroyed. In areas where observation wells are not functioning properly, suspend construction activities until reliable observations can be made. Add or remove water from observation well risers to demonstrate that observation wells are functioning properly.
3. Fill observation wells, remove piezometers, and fill holes when dewatering is completed.

108.2.3.2 Provide continual observation to ensure that subsurface soils are not being removed by the dewatering operation.

END OF SECTION 108

SECTION 110
CLEARING AND GRUBBING AND WELL ABANDONMENT

110.1 Description.

Clear and grub within the areas of the roadway right-of-way and of borrow pits, sand-clay base material pits, lateral ditches, and any other areas shown in the plans to be cleared and grubbed. Remove and dispose of all trees, stumps, roots and other such protruding objects, buildings, structures, appurtenances, existing flexible asphalt pavement, existing concrete pavement, and other facilities necessary to prepare the area for the proposed construction. Remove and dispose of all product and debris not required to be salvaged or not required to complete the construction.

Also, perform certain miscellaneous work the Engineer considers necessary for the complete preparation of the overall project site, as follows:

(a) Plug any water wells that are encountered within the right-of-way and that are to be abandoned.
(b) Level the terrain outside the limits of construction for purposes of facilitating maintenance and other post-construction operations in accordance with 110.10.3.
(c) Trim trees and shrubs within the project right-of-way that are identified in the Contract Documents.

Meet the requirements for such miscellaneous work as specified in 110.10.

110.2 Standard Clearing and Grubbing.

110.2.1 Work Included: Completely remove and dispose of all buildings, timber, brush, stumps, roots, rubbish, debris, and all other obstructions resting on or protruding through the surface of the existing ground and the surface of excavated areas, and all other structures and obstructions necessary to be removed and for which other items of the Contract do not specify the removal thereof, including septic tanks, building foundations, and pipes.

Perform Standard Clearing and Grubbing within the following areas:

(a) All areas where excavation is to be done, including borrow pits, lateral ditches, right-of-way ditches, etc.
(b) All areas where roadway embankments will be constructed.
(c) All areas where structures will be constructed, including pipe culverts and other pipe lines.

110.2.2 Depths of Removal of Roots, Stumps, and Other Debris: In all areas where excavation is to be performed, or roadway embankments are to be constructed, remove roots and other debris to a depth of 12 inches below the ground surface. Remove roots and other debris from all excavated material to be used in the construction of roadway embankment or roadway

base. Plow the surface to a depth of at least 6 inches, and remove all roots thereby exposed to a depth of at least 12 inches. Completely remove and dispose of all stumps within the roadway right-of-way.

Remove all roots, etc., protruding through or appearing on the surface of the completed excavation within the roadway area and for structures, to a depth of at least 12 inches below the finished excavation surface.

Remove or cut off all stumps, roots, etc., below the surface of the completed excavation in borrow pits, material pits, and lateral ditches.

Within all areas where standard clearing and grubbing is to be performed, remove roots and other debris projecting through or appearing on the surface of the original ground to a depth of 12 inches below the surface, but do not plow or harrow these areas.

110.2.3 Trees to Remain: As an exception to the above provisions, where so directed by the Engineer, trim, protect, and leave standing desirable trees within the roadway area. Trim branches of trees extending over the area occupied by the roadway as directed, to give a clear height of 16 feet above the roadway.

110.2.4 Boulders: Remove any boulders encountered in the roadway excavation or found on the surface of the ground. When approved by the Engineer, place boulders in neat piles inside the right of way. The Contractor may stockpile boulders encountered in City-furnished borrow areas which are not suitable for use in the embankment construction within the borrow area.

110.3 Selective Clearing and Grubbing.

The Contractor shall remove and dispose of all vegetation, obstructions, etc., as provided above except that, where so elected, the Contractor may cut roots, etc., flush with the ground surface. Completely remove and dispose of stumps. Entirely remove undergrowth except in specific areas designated by the Engineer to remain for aesthetic purposes. Trim, protect, and leave standing desirable trees, with the exception of such trees as the Engineer may designate to be removed in order to facilitate right-of-way maintenance. Remove undesirable or damaged trees as so designated by the Engineer. Perform Selective Clearing and Grubbing only in areas so designated in the plans.

110.4 Protection of Property Remaining in Place.

Protect and do not displace property obstructions which are to remain in place, such as buildings, sewers, drains, water or gas pipes, conduits, poles, walls, posts, bridges, etc.

110.5 Removal of Buildings.

110.5.1 Parts to be Removed: Completely remove all parts of the buildings, including utilities, plumbing, foundations, floors, basements, steps, connecting concrete sidewalks or other pavement, septic tanks, and any other appurtenances, by any practical manner which is not detrimental to other property and improvements. Remove utilities to the point of connection to

the utility owner's cut-in. After removing the sewer connections to the point of cut-in, construct a concrete plug at the cut-in point, as directed by the Engineer, except where the utility owners may elect to perform their own plugging. Contact the appropriate utility companies prior to removal of any part of the building to ensure disconnection of services.

110.5.2 Removal by Others: Where buildings within the area to be cleared and grubbed are so specified to be removed by others, remove and dispose of any foundations, curtain walls, concrete floors, basements or other foundation parts which might be left in place after such removal of buildings by others.

110.6 Removal of Existing Structures.

110.6.1 Structures to be Removed: Remove and dispose of the materials from existing structures. Remove the following: (1) those structures, or portions of structures, shown in the plans to be removed; (2) those structures, or portions of structures, found within the limits of the area to be cleared and grubbed, and directed by the Engineer to be removed; (3) those structures, or portion of structures, which are necessary to be removed in order to construct new structures; and (4) other appurtenances or obstructions which may be designated in the Contract Documents as to be included in an item of payment for the work under this Article.

Notify the Florida Department of Environmental Protection (DEP) using DEP Form 62-257.900(1) "Notice of Asbestos Renovation or Demolition" at least 10 working days prior to the demolition or renovation of any structures, even if asbestos is not found on the project. Provide a copy of this Notice to the Engineer.

110.6.2 Method of Removal:

110-6.2.1 General: Remove the structures in such a way so as to leave no obstructions to any proposed new structures or to any waterways. Pull, cut off, or break off pilings to the requirements of the permit or other Contract Documents, or if not specified, not less than 2 feet below the finish ground line. In the event that the plans indicate channel excavation to be done by others, consider the finish ground line as the limits of such excavation. For materials which are to remain the property of the City or are to be salvaged for use in temporary structures, avoid damage to such materials, and entirely remove all bolts, nails, etc. from timbers to be so salvaged. Mark structural steel members for identification as directed.

110.6.2.2 Removal of Steel Members With Hazardous Coatings: Provide to the Engineer for approval a copy of the "Contractor's Lead in Construction Compliance Program" from the firm actually removing and disposing of these steel members before any members are disturbed.

Vacuum power tool clean any coated steel member to bare metal as defined by SSPC-SP11 a minimum of 4 inches either side of any area to be heated (torch cutting, sawing, grinding, etc.) in accordance with 29 CFR 1926.354. Abrasive blasting is prohibited.

Provide air-supplied respirators in accordance with 29 CFR 1926.62 and 29 CFR 1910.134.

110.6.3 Partial Removal of Bridges: On concrete bridges to be partially removed and widened, remove concrete by manually or mechanically operated pavement breakers, by concrete saws, by chipping hammers, or by hydro-demolition methods. Do not use explosives. Where concrete is to be removed to neat lines, use concrete saws or hydro-demolition methods capable of providing a reasonably uniform cleavage face. If the equipment used will not provide a uniform cut without surface spalling, first score the outlines of the work with small trenches or grooves. For all demolition methods, submit for review and approval of the Engineer, a demolition plan that describes the method of removal, equipment to be used, types of rebar splices or couplers, and method of straightening or cutting rebars. In addition, for hydro-demolition, describe the method for control of water or slurry runoff and measures for safe containment of concrete fragments that are thrown out by the hydro-demolition machine.

110.6.4 Authority of U.S. Coast Guard: For structures in navigable waters, when constructing the project under authority of a U.S. Coast Guard permit, the U.S. Coast Guard may inspect and approve the work to remove any existing structures involved therein, prior to acceptance by the City.

110.6.5 Asbestos Containing Materials (ACM) Not Identified Prior to the Work: When encountering or exposing any condition indicating the presence of asbestos, cease operations immediately in the vicinity and notify the Engineer.

Make every effort to minimize the disturbance of the ACM. Immediately provide for the health and safety of all workers at the job site and make provisions necessary for the health and safety of the public that may be exposed to any potentially hazardous conditions. Provisions shall meet all applicable laws, rules or regulations covering hazardous conditions and will be in a manner commensurate with the gravity of the conditions.

The Engineer will notify the Engineer who will coordinate with the City for assessment and/or remediation. The Contractor shall provide access to the potential contamination area. Preliminary investigation by the City will determine the course of action necessary for site security and the steps necessary to resolve the contamination issue.

The City or its designee will delineate the contamination area(s), any staging or holding area required. The Contractor shall coordinate with the City or its designee and the Engineer to develop a work plan that will provide the City's or its designee's operations schedule with projected completion dates for the final resolution of the contamination issue.

The City or its designee will maintain jurisdiction over activities inside any outlined contaminated areas and any associated staging holding areas. The City or its designee will be responsible for the health and safety of workers within the delineated areas. Provide continuous access to these areas for the Asbestos/CAR Contractor and representatives of regulatory or enforcement agencies having jurisdiction.

The Contractor and the City or its designee will use the schedule as a basis for planning the completion of both work efforts. The Engineer may grant Contract Time extensions according to the provisions of the Contract Documents.

The Contractor will cooperate with the City or its designee to expedite integration of the remediation operations into the construction project. The Contractor is not expected to engage in routine construction activities involving asbestos-containing materials. Adjustments to quantities or to contract unit prices will be made according to work additions or reductions on the part of the Contractor in accordance with the Contract Documents.

The Engineer will direct the Contractor when operations may resume in the affected area.

110.7 Removal of Existing Pavement.

Remove and dispose of existing flexible asphalt pavement, rigid Portland Cement Concrete pavement, sidewalk, slope pavement, ditch pavement, curb, and curb and gutter etc., where shown in the plans or ordered by the Engineer to be removed or where required because of the construction operations. Retaining walls, drainage structures and flexible asphalt pavement are not included in the work under this Article.

110.8 Ownership of Materials.

Except as may be otherwise specified in the Contract Documents, the Contractor shall take ownership of all buildings, structures, appurtenances, and other materials removed by him and shall dispose of them in accordance with Section 110.9.

110.9 Disposal of Materials.

110.9.1 General: Either stack materials designated to remain the property of the City in neat piles within the right-of-way or, if approved by the City, load onto the City's vehicles.

Dispose of timber, stumps, brush, roots, rubbish, and other objectionable material resulting from clearing and grubbing in areas and by methods meeting the applicable requirements of all Local, State and Federal regulations. Do not block waterways by the disposal of debris.

110.9.2 Burning Debris: Where burning of such materials is permitted, perform all such burning in accordance with the applicable laws, ordinances, and regulations. Perform all burning at locations where trees and shrubs adjacent to the cleared area will not be harmed.

110.9.3 Timber and Crops: The Contractor may sell any merchantable timber, fruit trees, and crops that are cleared under the operations of clearing and grubbing for his own benefit, subject to the provisions of the Contract Documents, which may require that the timber, fruit trees, or crops be burned at or near the site of their removal, as directed by the Engineer. The Contractor is liable for any claims which may arise pursuant to the provisions of this Subarticle.

110.9.4 Disposal of Treated Wood: Treated wood, including that which comes from bridge channel fender systems, must be handled and disposed of properly during removal. Treated wood should not be cut or otherwise mechanically altered in a manner that would generate dust or particles without proper respiratory and dermal protection. The treated wood must be disposed of in at least a lined solid waste facility or through recycling/reuse. Treated wood shall not be disposed by burning or placement in a construction and demolition (C&D) debris landfill. All compensation for the cost of removal and disposal of treated wood will be included in the Cost of Clearing and Grubbing.

110.9.5 Hazardous Materials/Waste: Handle, transport and dispose of hazardous materials in accordance with all Local, State and Federal requirements including the following:

a. SSPC Guide 7
b. Federal Water Pollution Control Act, and
c. Resource Conservation and Recovery Act (RCRA).

The Contractor shall accept responsibility for the collection, sampling, classification, packaging, labeling, accumulation time, storage, manifesting, transportation, treatment and disposal of hazardous waste, both solid and liquid. Separate all solid and liquid waste and collect all liquids used at hygiene stations and handle as hazardous materials/waste. Obtain written approval from the Engineer for all hazardous materials/waste stabilization methods before implementation.

The Contractor shall obtain an EPA/FDEP Hazardous Waste Identification Number (EPA/FDEP ID Number) before transporting and/or disposal of any hazardous materials/waste, listing the City as the generator of all hazardous materials/waste.

Submit the following for the Engineer's approval before transporting, treatment or disposal of any hazardous materials/waste:

a. Name, address and qualifications of the transporter,
b. Name, address and qualifications of the treatment facility, and
c. Proposed treatment and/or disposal of all Hazardous Materials/Waste.

The Contractor shall transport all hazardous materials/waste in accordance with applicable 40 CFR 263 Standards and provide a copy of all completed Hazardous Materials/Waste manifest/bills of lading to the Engineer within 21 days of each shipment.

110.9.5.1 Steel Members With Hazardous Coating: Dispose of steel members with hazardous coating in one of the following manners:

(a) Deliver the steel members and other hazardous waste to a licensed recycling or treatment facility capable of processing steel members with hazardous coating.
(b) Deliver the steel members with hazardous coating to a site designated by the Engineer for use as an offshore artificial reef. Deliver any other hazardous materials/waste to a licensed hazardous materials/waste recycling treatment facility.

Dismantle and/or cut steel members to meet the required dimensions of the recycling facility, treatment facility, or offshore artificial reef agency.

All compensation for the cost of removal and disposal of hazardous materials/waste will be included in the Cost of Clearing and Grubbing.

110.9.5.2 Certification of Compliance: Furnish two copies of Certification of Compliance from the firm actually removing and disposing of the hazardous materials/waste stipulating, the hazardous materials/waste has been handled, transported and disposed of in accordance with this Specification. The Certification of Compliance shall be attested to by a person having legal authority to bind the company.

The Contractor shall maintain all records required by this Specification and ensure these records are available to the City upon request.

110.10 Miscellaneous Operations.

110.10.1 Water Wells Required to be Plugged: Fill or plug all water wells within the right-of-way, including areas of borrow pits and lateral ditches, that are not to remain in service, in accordance with applicable Water Management District rules or the Department of Environmental Protection regulations.

Cut off the casing of cased wells at least 12 inches below the ground line or 12 inches below the elevation of the finished excavation surface, whichever is lower. Water wells, as referred to herein, are defined either as artesian or non-artesian, as follows:

(a) An artesian well is an artificial hole in the ground from which water supplies may be obtained and which penetrates any water-bearing rock, the water in which is raised to the surface by natural flow or which rises to an elevation above the top of the water-bearing bed. Artesian wells are further defined to include all holes drilled as a source of water that penetrate any water-bearing beds that are a part of the artesian water system of Florida, as determined by representatives of the applicable Water Management District.

(b) A non-artesian (water-table) well is a well in which the source of water is an unconfined aquifer. The water in a non-artesian well does not rise above the source bed.

When the plans do not indicate whether a non-flowing well is artesian or non-artesian, obtain this information from the Engineer.

110.10.2 Landscape Areas: When certain areas of the right-of-way, outside of the limits of construction, are shown in the plans or designated by the Engineer to be landscaped, either under the construction Contract or at a later time, remove undesirable trees, stumps,

undergrowth, and vegetation, as directed, and preserve and trim natural growth and trees as directed by the Engineer.

110.10.3 Leveling Terrain: Within the areas between the limits of construction and the outer limits of clearing and grubbing, fill all holes and other depressions, and cut down all mounds and ridges. Make the area of a sufficient uniform contour so that the City's subsequent mowing and cutting operations are not hindered by irregularity of terrain. Perform this work regardless of whether the irregularities were the result of construction operations or existed originally.

110.10.4 Mailboxes: When the Contract Documents require furnishing and installing mailboxes, permit each owner to remove the existing mailbox. Work with the Local Postmaster to develop a method of temporary mail service for the period between removal and installation of the new mailboxes. Install the mailboxes in accordance with the FDOT Design Standards.

110.11 Method of Measurement and Payment.

110.11.1 Clearing and Grubbing: When direct payment is provided in the Contract, the quantity to be paid for will be the lump sum quantity to include clearing and grubbing, removal of existing pavement, plugging water wells, mailbox replacements, delivery of salvageable material to the City,

Price and payment will be full compensation for all clearing and grubbing required for the roadway right-of-way and for lateral ditches, channel changes, or other outfall areas, and any other clearing and grubbing indicated, or required for the construction of the entire project, including all necessary hauling, furnishing equipment, equipment operation, furnishing any areas required for disposal of debris, leveling of terrain and the landscaping work of trimming, etc., as specified herein, except for any areas designated to be paid for separately or to be specifically included in the costs of other work under the Contract. Where construction easements are specified in the plans and the limits of clearing and grubbing for such easements are dependent upon the final construction requirements, no adjustment will be made in the lump sum price and payment, either over or under, for variations from the limits of the easement defined on the plans.

110.11.2 General: In each case, except as provided below, where no item of separate payment for such work is included in the proposal, all costs of such work will be included in the various scheduled items in the Contract, or under specific items as specified herein below or elsewhere in the Contract.

END OF SECTION 110

SECTION 112 - TREES, PLANTS, AND GROUNDCOVERS

PART 1 - GENERAL

1.1 DESCRIPTION OF WORK:

Furnish all materials, equipment and labor as necessary for preparation of planting areas, soil treatment, planting of trees, shrubs, groundcovers and grass, relocation of designated plants, protection of plants, maintenance, guarantee and replacement of plants, and related items as required to complete the work as indicated on the drawings and specified herein.

1.2 DEFINITIONS:

A. The following words and terms or pronouns used instead shall wherever they appear in these specifications, be construed as follows, unless a different meaning is clear from the context:

"Final Acceptance" shall mean that point in time when all requirements of project drawings and specifications are completed, including any punch list items, to the satisfaction of the Engineer. The contractor shall be notified in writing of final acceptance by the Engineer.

"Warranty Period" shall be a one year period beginning at Final Acceptance.

"Maintenance Period" shall begin when plant material is installed and continue for ninty (90) days after notification of Final Acceptance.

"Final Maintenance Inspection" shall occur at the end of the ninty (90) day maintenance period.

1.3 QUALITY ASSURANCE:

A. The landscape installation shall be by a single firm specializing in landscape work.

B. Plant names indicated shall comply with "Standardized Plant Names" as adopted by the latest edition of the American Joint Committee of Horticultural Nomenclature. Names of varieties not listed shall conform generally with names accepted by the nursery trade. Provide stock true to botanical name and legibly tagged.

C. Comply with sizing and grading standards of the latest edition of "American Standard for Nursery Stock" (ANSI Z60 1) and, sizing and grading standards of the latest edition of "Grades and Standards for Nursery Plants: Part I and II" by the Florida Department of Agriculture and Consumer Services. All plant material shall be "Florida No. 1" or better.

1. Caliper measurement shall be taken six (6) inches above ground level if four (4) inches or less. If greater than 4 (four) inches, caliper measurement will be taken at twelve (12) inches above ground level.

D. Do not make substitutions. If specified landscape material is not obtainable submit to the Engineer in writing, proof of non-availability and proposal for use of equivalent material.

E. All plants shall be nursery grown and 100% acclimatized to local planting conditions.

F. Stock furnished shall be at least the minimum size indicated. Larger stock is acceptable, at no additional cost, and providing that the larger plants will not be cut back to size indicated. Provide plants indicated by two measurements so that only a maximum of 25% are of the minimum size indicated and 75% are of the maximum size indicated. Height and spread specified will prevail over container size specified, for groundcover and shrub material only.

G. All trees will be inspected and approved by the Engineer at the place of growth, for compliance with specification requirements for quality, size, and variety. When trees cannot be obtained locally, provide sufficient photographs of the proposed plants for approval.

1. Approval shall not impair the right of inspection and rejection upon delivery at the site or during the progress of the work.

2. Tag trees at the source of supply prior to inspection by the Engineer.

1.4 SUBMITTALS:

A. Submit planting schedule showing scheduled dates for each type of planting in each area of site two weeks prior to beginning work.

B. Submit certificates of inspection, as required by governmental authorities; and manufacturers or vendors certified analysis for soil amendments, herbicides, insecticides and fertilizer materials; submit other data substantiating that materials comply with specified requirements.

C. Submit the following material samples:

1. Mulch
2. Topsoil with verification of sterilization and source.
3. One typical sample of each shrub and groundcover material as specified, prior to planting for approval.

a. Such approval shall not impair the right of inspection and rejection upon delivery at the site or during the progress of the work.

D. Upon final acceptance of plant material, submit two (2) written maintenance instructions recommending procedures for maintenance of plant materials for a one year period.

E. Provide landscape planting as-built drawings:

1. Legibly mark drawings to record actual installation.
2. Identify field changes of dimension and detail and changes made as directed by the Engineer.

1.5 DELIVERY, STORAGE AND HANDLING:

A. Deliver fertilizer materials in original, unopened, and undamaged containers showing weight, analysis, and name of manufacturer. Store in manner to prevent wetting and deterioration.

B. Trees must be held and fully acclimatized over a period not less than eight (8) weeks prior to delivery to site.

C. Take all precautions customary in good trade practice in preparing plants for moving. Workmanship that fails to meet the highest standards will be rejected. Spray deciduous plants in foliage with an approved "Anti-Desiccant" immediately prior to digging to prevent dehydration. Dig, pack, transport, and handle plants with care to ensure protection against injury. Inspection certificates required by law shall accompany each shipment invoice or order. Upon arrival, the certificate shall be submitted to the Engineer. Protect all plants from drying out. If plants cannot be planted immediately upon delivery, properly protect them with soil, wet peat moss, or in a manner acceptable to the Engineer. Water heeled-in plantings daily. No plant shall be bound with rope or wire in a manner that could damage or break the branches.

D. Plant material that is stored improperly shall receive a special review established on a case by case basis.

E. Cover plants transported on open vehicles with a protective covering to prevent wind burn.

F. Topsoil shall be kept dry and loose for planting bed mixes.

G. Label at least one (1) tree and one (1) shrub of each variety with a securely attached waterproof tag bearing legible designation of botanical and common names.

1.6 JOB CONDITIONS:

A. Work notification: Notify the Engineer at least seven (7) working days prior to installation of plant material. All plant samples shall be reviewed for approval prior to notification.

B. Protect existing utilities, paving and other facilities from damage caused by landscaping operations. Notify any affected utilities 48 hours prior to beginning work, if applicable.

C. A complete list of plants, including a schedule of sizes, quantities, and other requirements are shown on the drawings. In the event that quantity discrepancies or material omissions occur in the plant materials list, the planting plans shall govern.

D. Examine the subgrade, verify the elevations, observe the conditions under which work is to be performed, and examine unsatisfactory conditions before proceeding with the work.

1. When conditions detrimental to plant growth are encountered such as rubble fill, adverse drainage conditions or obstructions, notify the Engineer before planting to determine alternative action.

2. Contractor shall be responsible for the removal of existing vegetation deemed necessary by the Engineer to carry out the scope of the project.

E. The irrigation system shall be installed prior to planting, if applicable. Locate, protect and maintain the irrigation system during planting operations. Repair irrigation system components, new and existing, damaged during planting operations. Test system prior to installation of plant material.

F. Any work taking place along a city, county or state road or median must comply with appropriate regulating authorities guidelines for "Traffic Controls for Construction and Maintenance Operations". Contractor shall be responsible to file and obtain any and all required agency permits.

PART 2 - PRODUCTS

2.1 MATERIALS:

A. Plants: Provide plants typical of their species or variety; with normal, densely-developed branches and vigorous, fibrous root systems. Provide only sound, healthy vigorous plants free from defects, disfiguring knots, sunscald injuries, frost cracks, abrasion of the bark, plant diseases, insect eggs, borers, and all forms of infestation. All plants shall have a fully developed form without voids and open spaces.

1. All plant material shall be "Florida No. 1", or better.

2. Dig balled and burlapped plants with firm, natural balls of earth of diameter and depth to encompass the fibrous and feeding root system necessary for full recovery of the plant. Provide ball sizes complying with the latest edition of the "American Standard for Nursery Stock". Cracked or mushroomed balls are not acceptable.

3. Container-grown stock: Grown in container for sufficient length of time for the root system to have developed to hold its soil together, firm and whole.

   a. No plants shall be loose in container.
   b. Container stock shall not be pot bound.

4. Trees that have the main trunk forming a "Y" shape are not acceptable. Trees shall have a minimum of five (5) feet of trunk free from branching, unless otherwise specified.

5. Sanding of palm tree trunks will not be accepted. Palm tree fronds shall be tied up to protect the bud from stress and damage. Fronds shall be tied with a material that will decompose naturally.

6. Plants planted in rows shall be matched in form.

7. Plants larger than those specified in the plant list may be used when approved by the Engineer.

    a. If the use of larger plants is acceptable, increase the spread of roots or root ball in proportion to the size of the plant.

8. The height of the tree, measured from the crown of the roots to the average height of the top of the tree, shall not be less than the minimum size designated in the plant list. Container size designated, if any, shall be the minimum size required.

9. No pruning wounds shall be present with a diameter of more than 1" and such wounds must show vigorous bark on all edges.

10. Height and spread requirements, of shrub and groundcover material, indicated in the plant list shall prevail over container size indicated, unless otherwise specified.

11. Shrubs and small plants shall conform to the following standards:

    a. The measurements for height shall be taken from the ground level to the average height of the top of the plant and not the longest branch.

    b. Single stemmed or thin plants will not be accepted.

    c. Side branches shall be generous, well-twigged, and the plant as a whole well-bushed to the ground, unless otherwise specified.

    d. Plants shall be in a vigorous condition, free from dead wood, bruises, or other root or branch injuries.

12. Any plant material showing signs of shock will be judged on a case by case basis for acceptance or rejection.

2.2 ACCESSORIES:

A. Refer to drawings and other portions of specifications for accessories specifically used on this project.

PART 3 - EXECUTION

3.1 INSPECTION:

Contractor shall examine proposed planting areas and conditions for installation. Do not start

planting work until unsatisfactory conditions are corrected.

3.2 PREPARATION:

A. Time of planting.

1. Deciduous material: If deciduous trees are planted in-leaf, they shall be sprayed with an anti-desiccant prior to planting operation.

B. Planting shall be performed only by experienced workmen familiar with planting procedures under the supervision of a qualified supervisor.

C. Layout individual tree and shrub locations and areas for multiple plantings. Stake locations and outline areas, then secure the Engineer's acceptance before start of planting work. Give 24 hour notice for inspection. If obstructions are encountered that are not shown on the drawings, do not proceed with planting operations until alternate plant locations have been selected. Verify locations of existing utilities.

D. Excavate circular plant pits with vertical sides, except for plants specifically indicated to be planted in beds. Provide shrub pits at least 12" greater than the diameter of the root system and 3 times greater than diameter of rootball for trees. Depth of pit shall accommodate the root system. Scarify the bottom of the pit to a depth of 4". Remove excavated materials from the site, as specified and directed by the Engineer.

E. Provide pre-mixed planting mixture for use around the balls and roots of the plants consisting of topsoil and 1/2 lb. plant fertilizer as specified, for each cu. yd. of mixture.

F. Provide pre-mixed ground cover bed planting mixture consisting of topsoil and 1/2 lb. plant fertilizer as specified, per cu. yd. Provide beds a minimum of 8" deep. Excavate groundcover beds 4" deep, add planting mixture and fill to a depth of 8". If slopes are greater than 4 to 1 increase depth to 12".

G. Palm trees with clear trunk greater than six (6) feet in height shall be backfilled with soil indigenous to the site.

3.3 INSTALLATION:

A. Set plant material in the planting pit to proper grade and alignment. Set plants upright, plumb, and faced to give the best appearance or relationship to each other or adjacent structure. Set plant material 2-3" above the finished grade. No filling will be permitted around trunks or stems. Backfill the pit with half indigenous soil to the site and half planting mixture until approximately 2/3 full, then water thoroughly before placing remainder of backfill. Repeat watering until no more is absorbed. Do not use muddy mixtures for backfilling. Form a ring of soil around the edge of each planting pit to retain water.

After balled and burlapped plants are set, place soil mixture around bases of balls and fill all voids.

1. Remove all burlap, ropes, and wires from the tops of balls.

B. Space groundcover plants in accordance with indicated dimensions. Adjust spacing as necessary to evenly fill planting bed with indicated quantity of plants. Plant to within 4" of the trunks of trees and shrubs within planting bed and to within 6" edge of bed.

C. Care of Existing Trees:

1. All existing trees, if any, shall be protected through the duration of this project as outlined in the Tree Protection Standards of the City of Tampa Site Clearing Ordinance. These requirements and those attached at the end of this section are available in the City Hall Annex Building, 3rd floor east, Duplication Office for a fee.

D. Tree Relocation:

1. Tree relocation shall be performed under the supervision of the City Arborist.

3.4 MAINTENANCE:

A. Begin maintenance immediately after planting. Maintain all plant material until final acceptance and for an establishment period of thirty (30) days after final acceptance.

B. Maintenance shall include but is not limited to pruning, cultivating, mowing, weeding, fertilizing, watering, and application of appropriate insecticides and fungicides necessary to maintain plants free of insects and disease.

1. Re-set settled plants to proper grade and position. Restore planting saucer and adjacent material and remove dead material.

2. Tighten and repair guy wires and stakes as required.

3. Correct defective work immediately after deficiencies become apparent and weather permits.

4. In addition to irrigation system, water trees every other day saturating the soil to a depth of three (3) feet for the first two (2) weeks. If no irrigation system exists, water plant material per the following schedule:

1-30 days - water every other day, saturating the soil to a depth of three (3) feet.

30-90 days - water twice a week, saturating the soil to a depth of three (3) feet.

90-365 days - water once a week, saturating the soil to a depth of three (3) feet.

Quantity of water applied should be adjusted in accordance to rainfall.

3.5 ACCEPTANCE:

A. Inspection to determine acceptance of planted areas will be made by the Engineer upon Contractor's request. Provide notification at least five (5) working days before requested inspection date.

1. Planted areas will be accepted provided all requirements, including maintenance, have been complied with and plant materials are alive and in a healthy, vigorous condition.

B. The Engineer will prepare a "punch list" of those items which must be corrected before reinspection for final acceptance. The Engineer will determine an appropriate time period in which punch list items must be corrected. Provide 48 hour notification of need for reinspection.

C. The City will assume plant maintenance 30 days after final acceptance, at which time, the contractor shall request a final maintenance inspection for acceptance, where requirements as stated in 3.5 apply.

3.6 WARRANTY:

A. Warrant plant material to remain alive and be in a healthy, vigorous condition for a period of one (1) year after completion and final acceptance of entire project.

B. Replace, in accordance with the drawings and specifications, all plants that are dead or as determined by the Engineer to be in an unhealthy or unsightly condition, and have lost their natural shape due to Contractor's negligence. The cost of such replacement(s) shall be at Contractor's expense. Warrant all replacement plants for one (1) year after final acceptance.

C. Warranty shall not include damage or loss of trees, plants, or groundcovers caused by fires, floods, freezing, rains, lightning storms or winds over 75 miles per hour, winter kill caused by extreme cold and severe winter conditions not typical of planting area; and acts of vandalism.

D. Remove and replace immediately all plants found to be dead or in unhealthy condition as determined by the Engineer at any time during warranty period. Make replacements within four (4) weeks of notification.

1. An inspection will be conducted at the end of the warranty period. Contractor will replace any plants found to be dead or in poor condition at this time within four (4) weeks of inspection. Contractor will also remove any tree bracing or guying determined by the Engineer to be unnecessary at this point in the tree's development.

3.7 CLEANING

Perform cleaning during installation of the work and upon completion of work. Remove from site all excess materials, soil, debris, and equipment. Repair damage resulting from planting operations.

* * *

SECTION 113 – DISPOSAL OF DEBRIS

W-113.01 General

The Contractor shall furnish all labor, materials and equipment required to transport and dispose of debris removed from all pipelines and structures to an approved facility at the Contractor's expense. Any permits required for the hauling and disposing of materials shall be obtained by the Contractor at their expense.

W-113.02 Scope of Work

The Contractor will have the following responsibilities:

a. Be solely responsible to handle, transport, test, permit and dispose of debris in accordance with all applicable regulatory requirements.

b. For transportation between project site and disposal site.

c. To apply for, pay fees and obtain all required environmental or transportation permits prior to handling debris. Permitting agencies include, but are not limited to, EPA, DER, DOT, Hillsborough County, City of Tampa and Expressway Authority.

d. To perform all necessary tests as required by permit and all applicable regulatory requirements.

e. To select a dispoal site and acquire approval from the disposal site owner for disposal of debris. The Contractor is responsible to pay all applicable disposal fees.

SECTION 425 - STORMWATER INLETS, MANHOLES AND JUNCTION BOXES

W-425.01 General

The work specified in this section consists of the construction of inlets, manholes, junction boxes, shoulder gutter inlets, and yard drains. These structures shall be of reinforced concrete, or may be of brick masonry if circular and constructed in place, and shall include the necessary metal frames and gratings. The work under this section shall also include the adjustment of those structures shown in the plans to be adjusted or which are required to be adjusted for the satisfactory completion of the work. The new structures shall be constructed in conformity with the plans and in accordance with these specifications and the latest City of Tampa Stormwater Standard Details.

W-425.02 Composition and Proportioning

Concrete: Unless otherwise shown in the plans, all concrete for these structures shall be Class II as specified in the latest FDOT Standard Specifications Section 346 – Portland Cement Concrete (EXCEPT section 346.6.1) and Section 347 – Portland Cement Concrete – NS.

Mortar: The mortar for brick masonry shall be of portland cement and sand, mixed in the proportions of one part cement to two parts of sand. Miami Oolitic rock screenings may be substituted for the sand upon prior approval of the Engineer. All the materials shall pass the No. 8 Sieve, and be uniformly graded from coarse to fine. At the option of the Contractor, hydrated lime, in an amount not to exceed ten percent of the amount of cement used, may be added to the mortar.

As an alternate to the above, masonry cement may be used in lieu of the above-specified mortar provided that it is delivered in packages properly identified by brand name of manufacturer, net weight of package, and whether it is Type 1 or Type 2, and further provided that it has not been in storage for a period greater than six months. Hydrated lime shall not be used with masonry cement.

The sand and cement shall be thoroughly mixed dry in proper boxes or mortar mixers and such quantity of clean fresh water added as will provide a stiff mortar of the proper consistency. The whole mass shall be thoroughly mixed until used. Any mortar that has set shall not be retempered in any way, and no mortar shall be used more than one and one-half (1-1/2) hours after mixing.

W-425.03 Gratings

Gratings and frames fabricated from structural steel shall be Zinc (hot-dip galvanized) Coatings on Iron and Steel Products, in accordance with the requirements of ASTM A123 These requirements do not apply when A-588 steel is used.

When Alternate "G" grates are specified, the chain, bolt, nuts, and cold shuts shall be galvanized after fabrication in accordance with the requirements of ASTM A 153.

W-425.04 Forms

Forms shall be of wood or metal, so designed and constructed that they may be removed without injury to the concrete. They shall be built true to line and grade and braced in a substantial and unyielding manner, and shall be approved by the Engineer before being filled with concrete.

W-425.05 Precast Inlets, Manholes, and Junction Boxes

Careful attention shall be given to the proper construction or reconstruction of the pavement adjacent to the gutters and at street intersections to obtain satisfactory drainage to the inlets from the intersecting streets.

The Contractor may request to substitute precast inlets, manholes, and junction boxes in lieu of cast-in-place units unless otherwise shown in the plans or directed by the Engineer. At locations not so restricted, the Contractor shall carefully examine the plan details at each structure to determine if use of a precast unit is feasible. The design and fabrication of precast units shall be in accordance with the standard index drawings, which may allow use of designs other than those detailed in the standard index drawings.

Smooth welded wire fabric may be substituted for deformed re-bar or welded deformed wire reinforcement in non-circular precast drainage structures provided the following requirements are met:

1. The smooth welded wire fabric shall comply with ASTM A-185.

2. Substitution of equal areas of smooth wire fabric for the reinforcing steel and provided the width and length of the unit is four times the width of the spacing of the cross wires.

3. Wire shall be continuous around the box and spliced at a quarter point of one side with an overlap of not less than the spacing of the cross wires plus two inches.

W-425.06 Construction Methods

Excavation: Excavation shall comply with the requirements specified in Section 1.

Placing and Curing Concrete: The concrete shall be placed in the forms, to the depth shown in the plans and thoroughly vibrated. After the concrete has hardened sufficiently, it shall be covered with suitable material approved by the Engineer, and kept moist for a period of three days.

Setting Manhole Castings: After the concrete has been cured as specified above, the frame of the casting shall be set in a full mortar bed composed of one part portland cement to two parts of fine aggregate.

Reinforcing Steel: The construction methods for the steel reinforcement shall be as specified in Section 6.

Laying Brick: All brick shall be saturated with water before being laid. The brick shall be laid by the shovejoint method so as to bond them thoroughly into the mortar. Headers and stretchers shall be so arranged as to bond the mass thoroughly. Joints shall be finished properly as the work progresses and shall be not less than 1/4 inch or more than 3/4 inch in thickness. No spalls or bats shall be used except for shaping around irregular openings or when unavoidable at corners.

The inside of the brick masonry walls shall be plastered uniformly with cement mortar one-half (1/2) inch in thickness mixed in proportions of one part of cement and two parts of clean, sharp sand.

Placing Pipe: Inlet and outlet pipes shall be of the same size and kind as the connecting pipe shown in the plans. They shall extend through the walls for a distance beyond the outside surface sufficient for the intended connections, and the concrete shall be constructed around them neatly so as to prevent leakage along their outer surface. The inlet and outlet pipes shall be flush with the inside of the wall.

Backfilling: Backfilling shall conform with the requirements specified in Section 2.

Adjusting Existing Structures: Existing manholes, catch basins, inlets, valve boxes, monument boxes, etc., within the limits of the proposed work, that do not conform to the finished grade of the proposed pavement, or to the finished grade designated on the plans for such structures, shall be cut down or extended, and made to conform to the grade of the new pavement, or to the designated grade of the structure if outside of the proposed pavement area. The materials and construction methods for this work shall conform to the requirements specified above.

Where manholes are to be raised, the adjustment may, at the Contractor's option, be made by the use of adjustable extension rings of the type which do not require the removal of the existing manhole frame. The extension device shall provide positive locking action and shall permit adjustment in height as well as diameter. The particular type of device used shall meet the approval of the Engineer.

Adjusting Structures: When an item of payment for adjusting manholes, valve boxes, inlets, or monument boxes is provided in the proposal, the number of such structures designated to be paid for under separate items, and which are satisfactorily adjusted, shall be paid for at the contract units prices each for Adjusting Inlets, Adjusting Manholes, Adjusting Valve Boxes, and Adjusting Monument Boxes.

For any of such types of these structures required to be adjusted but for which no separate item of payment is shown in the proposal for the specific type, payment shall be made under the item of Adjusting Miscellaneous Structures.

W-425.07 Drainage Structures

1. All inlets, manholes, and junction boxes shall, unless otherwise directed by the Engineer, be

constructed as per design plans and applicable design standards. All manholes shall be Traffic Bearing type. It shall be the responsibility of the Contractor to assure that the designated sizes of the drainage structures meet the following criteria:

a. The minimum distance from the top of the opening for the highest pipe to the bottom of the top slab shall be ten inches (10"); 12 inches from top of pipe to bottom of top slab, before "stack" is used.

b. The minimum diameter for stack heights shall be thirty-six (36) inches.

c. The minimum distance between pipe openings shall be nine (9) inches.

d. For four-sided structures having openings in more than one corner, individual shop drawings must be submitted for prior approval.

2. If warranted by field conditions and directed by the Engineer, the Contractor shall, at such locations, construct brick drainage structures (in place of concrete drainage structures), according to the standards specified below:

Brick construction shall be as follows:

a. Wall thickness minimum eight inches (8") up to eight feet (8') height, unless specified otherwise.

b. Wall thickness minimum twelve inches (12") up to twelve feet (12') height, unless specified otherwise.

c. Brick shall be laid in 1:2 (Portland cement-sand) mortar.

d. Before laying the bricks in mortar, the bricks shall be thoroughly sprinkled with clean water (not to saturation extent).

e. Brick for manhole and inlet structures shall be laid in stretcher courses, with every sixth course a header course.

f. All brick structures shall be plastered smooth inside also with 1/2-inch thick, 1:2 (Portland cement-sand) mortar.

g. No "unsound" brick shall be used. As a test, if a light hammer blow, with the brick held lightly in hand, does not produce a uniform crisp ringing sound, the brick shall be construed to have crack(s), or otherwise unsound and shall be rejected.

h. All bricks shall be solid.

3. No additional compensation shall be paid for brick structures. Brick and concrete shall not be used simultaneously in drainage structure walls. Walls of round structures shall be

constructed of concrete only.

4. For all types of manholes, the top and bottom slab shall be as per applicable D.O.T. standards, even if brick is allowed to be used in the manhole walls. The following criteria shall apply to slab thicknesses and steel reinforcements:

   a. Top and bottom slabs shall have same thicknesses and reinforcements in any manhole structure.

   b. The minimum slab thickness and reinforcement shall be 8 inches thick and #6 bars at 6-inch centers both ways.

   c. 4-foot by 6-foot (4' x 6') or larger manholes, including circular manholes with inside diameter of 5-feet (5.0') or larger, shall have 10-inch thick slabs with #7 bars at 6-inch centers both ways.

   d. Unless specified on the Plans, four-sided structures with both inside dimensions in excess of eight feet (8.0') and circular structures with inside diameter in excess of eight feet (8.0') shall not be covered by D.O.T. and the above criteria.

5. All grate inlets shall conform to the City of Tampa design standards.

6. Grates on inlets, as well as all other structures, shall be Traffic Bearing Type, unless specified otherwise, and subject to approval of the Engineer. All grate inlets shall be fitted with an approved metal frame at the top to seat the grates.

7. All Type-P manholes shall be bid at one average unit price regardless of size and shape. Similarly, all Type-J manholes will be bid at one average unit price regardless of size and shape unless indicated otherwise in the proposal.

8. The reinforcements and shapes for all drainage structures, unless directed by the Engineer otherwise, shall conform to the Plans and applicable design standards.

9. Vertical support columns (one in case of Type 5 inlet) shall be constructed by the Contractor, as a part of the D.O.T. Type 5 and 6 curb inlets, where and as directed by the Engineer.

10. The Contractor, if so directed by the Engineer in order to better meet site requirements, shall construct B-S-1, B-R-2, B-V-1, or B-R-1 type curb inlets in lieu D.O.T. Type 5 and 6 inlets and vice-versa without additional cost to the City. P-5 and P-6 inlets shall have 3-1/2-foot by 3-1/2-foot substructures unless oversize pipe is to be accommodated or otherwise directed by the Engineer. Legible, detailed plans of each inlet type shall be provided to the Contractor.

    Side openings in curb and grate type inlets may be specified in the Plans or by the Construction Engineer to meet site conditions. The Contractor shall provide such openings

without any additional cost.

11. When precast drainage structures are requested as substitutions for poured in place concrete structures, the Contractor shall meet the following additional requirements:

    a. Minimum height of the base structure (manhole or inlet barrel), unless restricted by design, shall be 5 feet 0 inches before extending the structure height by another precast "barrel." The minimum height of the top (extension) precast "barrel" shall be 1 foot 6 inches. "Barrel" extensions of less than 1-foot 6-inch height shall be cast in place with continuous reinforcement.

    b. Four-sided structures may be considered as an alternate to circular structures, but not the reverse.

    c. For substructures for the City-type curb inlets, unless specified otherwise, directed by the Engineer, or to accommodate larger pipes, the Contractor may use a 3-foot by 4-foot (inside dimensions) structure. This structure shall have same slab and wall thicknesses and steel reinforcing as specified for "Type E" grate inlet.

    d. When circular structures are precast in accordance with ASTM C-478, minimum wall thickness shall be six inches (6") thick or as specified in ASTM C-478 for larger diameter structures.

    e. The location of the pipe holes and adequate basic substructures height, unless directed otherwise by the Engineer, shall be the responsibility of the Contractor.

    f. The Contractor shall submit shop drawings only as specified below:

        (1) One each-typical for different type of structures.

        (2) For structures directed by the Engineer, and/or requiring change with respect to design plans, or as otherwise required by these specifications.

    g. Provide schedule of manufacture of the structures. No compensation shall be paid to the Contractor for unusable precast drainage structures.

    h. Provide material testing acceptance reports by a licensed private laboratory verifying:

        (1) that the structures were constructed in accordance with details shown on the Plans and/or Shop Drawings;

        (2) the exact design criteria adhered to; if more than one, identify which criteria applies to which structures;

(3) the project title, project number, file number, date cast, structure, plan sheet number and station;

(4) reinforcement size, spacing and amount;

(5) concrete placement, curing and strength, and verification of concrete cover on reinforcement; and

(6) that the testing laboratory stamp is placed on each structure prior to shipment.

i. Cooperate with Department personnel regarding periodic inspection of the precast units and the precast operations.

12. All manhole and inlet structures shall be set on a minimum 6-inch thick layer of compacted number 57 size coarse aggregate unless noted otherwise in the Plans or Specifications, or unless the Engineer determines a thicker layer is required due to soil and/or water conditions. All such coarse aggregate shall be completely enveloped in non-woven filter fabric as directed by the Engineer.

Payment for the 6-inch thick layer of stone shall be included in the price of the structure. Payment for thicker layers of stone shall be made from the select bedding material (stone) pay item, if available, or as extra work.

13. All casting covers, such as for inlets and manholes, shall bear the appropriate City of Tampa identification for storm sewers and for sanitary sewers, as shown on the Plans and directed by the Engineer.

* * *

SECTION 430 - PIPE CULVERTS AND STORM SEWERS

W-430.01 General

The work specified in this section consists of furnishing drainage pipe and mitered end sections, conforming to these specifications and of the particular types, sizes, and dimensions shown in the plans. This work shall include the installation of the pipe and mitered end sections at the locations called for, in conformity with the lines and grades given, and the furnishing and construction of such joints and connections to existing pipes, catch basins, inlets, manholes, walls, etc., as may be required to complete the work as indicated in the plans.

W-430.02 Laying Pipe

General: Each section of pipe shall be inspected for defects before being lowered into the trench. All pipe shall be carefully laid, true to the lines and grades given, with hubs upgrade and tongue end fully entered into the hub. When pipe with quadrant reinforcement, or circular pipe with elliptical reinforcement, is used, the pipe shall be installed in a position such that the manufacturer's marks designating "top" and "bottom" of the pipe shall not be more than five degrees from the vertical plane through the longitudinal axis of the pipe. Any pipe that is not in true alignment or which shows any settlement after laying shall be taken up and relaid without additional compensation.

Trench Excavation: The excavation of the trench for pipe culverts and storm sewers shall be as specified in Section 1.

Foundation: Where the foundation material is of inadequate supporting value, a suitable foundation shall be provided, as directed by the Engineer, by the removal of unsuitable material and replacing with suitable material as specified in Section 2. Where in the Engineer's opinion, the removal and replacement of unsuitable material is not practicable, he may direct alternates in the design of the pipeline, as required to provide adequate support. Should such alteration in the design result in an increase in the costs of the installation, an appropriate adjustment will not be considered as an adequate basis for extra compensation.

Pipe shall not be laid on blocks or timbers, or on other unyielding material, except where the use of such devices is called for in the plans.

Backfilling: The backfilling around the pipe shall be as specified in Section 2.

Plugging Pipe: When so shown in the plans, the ends of the pipe culverts shall be sealed with a masonry plug a minimum of eight (8) inches in thickness unless otherwise shown in the plans.

End Treatment: The end treatment required at each cross drain, side drain, or storm sewer pipe end is shown in the plans. Alternate types are permitted only when shown. Details for each type of end treatment are contained in the standard index drawings.

As an exception to the above, when concrete mitered end sections are permitted, reinforced concrete U-endwalls may be used but shop drawings must be submitted to the Engineer for approval prior to use.

Metal pipe Protection: To protect corrugated steel or aluminum pipe embedded in a concrete structure, such as an inlet, manhole, junction box, endwall, or concrete jacket, a bituminous coating shall be applied to the surface area of the pipe within and 12 inches beyond the concrete or mortar seal prior to sealing.

The surface preparation, application methods (dry film thickness and conditions during application), and equipment used shall be in accordance with the coating manufacturer's published specifications.

All coating products used must be approved by the Bureau of Materials and Research, Florida Department of Transportation, Gainesville, Florida.

The cost of furnishing and applying the bituminous material shall be included in the contract unit price for new pipe.

W-430.03 Removing and Relaying Existing Pipe

Removal: If the plans indicate that existing pipe is to remain the property of the City, all existing pipe or pipe arch so indicated in the plans to be removed or that does not conform to the lines and grades of the proposed work and that is not to be relaid, shall be taken up and stacked neatly along the right of way, as directed by the Engineer. Due care shall be exercised to prevent damage to salvageable pipe during removal and stacking operations.

Relaying: Where so shown in the plans, existing culvert pipe shall be taken up and cleaned and shall be relaid in the same manner as specified for new culvert pipe. Where necessary, existing metal pipe or pipe arch shall be straightened before it is relaid.

W-430.04 Placing Pipe Under Railroad

General: Pipe culverts to be constructed under railroad tracks shall be constructed in accordance with the requirements of the railroad company.

Unless the specific provisions specifically stipulate that the work of shoring under the tracks, and sheeting and bracing of the trench, is to be done by the railroad company, all such work required by the railroad company or deemed necessary by the Engineer in order to assure safe and uninterrupted movement of the railroad equipment, shall be done by the Contractor ar his expense.

Requirements of the Railroad Company: The method of installation shall be as required by the railroad company as specified in the specific provisions.

When the general method of installation which the railroad company will require is indicated in the plans, such method and any other specific details of the installation which might be indicated in the plans, shall not be changed without written approval of the Engineer, after the approval (or the direction) for such change has been obtained from the railroad.

Notification to Railroad Company; The Contractor shall notify the railroad company of the date on which he expects to begin the work of placing pipe under the railroad tracks at least ten days prior to such date.

Placing Pipe by Jacking: When the placing of the pipe through the railroad embankment is done by the jacking method, the details of the jacking method to be used must be approved by the Engineer and the railroad company before the work is started.

Use of Tunnel Liner: When the railroad company requires that a tunnel liner be used for placing the pipe in lieu of the jacking method, separate payment for the tunnel liner material will be made only in cases where the plans or specifications do not specifically provide that a tunnel liner will be required; in which cases the City will reimburse the Contractor for the actual cost of the liner, delivered at the site. Such cost shall be based on a liner having the minimum gauge acceptable to the railroad.

W-430.05 Specific Requirements for Concrete Pipe

Sealing Joints:

(1) Round Concrete Pipe Other than Side Drain: For all round concrete pipe other than side drain pipe, the pipe joints shall be sealed by the use of round rubber gaskets. When rubber gaskets are used, the pipe joints shall meet the requirements specified in the Workmanship and Materials Section W-942. The gasket and the surface of the pipe joint, including the gasket recess, shall be clean and free from grit, dirt, and other foreign matter at the time the joints are made. In order to facilitate closure of the joint, application of an approved vegetable soap lubricant immediately prior to closing of the joint will be permitted.

(2) Side Drain Pipe: For all concrete pipe which does not have rubber-gasket joints, the joints shall be thoroughly wetted before the inside mortar is placed; and before succeeding sections of the pipe are laid, the lower half of the joint portion of the pipe in place shall be filled on the inside with cement mortar and the upper half of the tongue portion of the next joint wiped with cement mortar, both in sufficient thickness to bring the inner surface of the abutting pipe flush and even, when the pipe is laid. After the pipe is laid, the inside of the joint shall be wiped and finished smooth and a mortar bead not less than 3/4 inch thick shall be formed completely around the outside of the joint.

Laying Requirements for Concrete Pipe with Rubber Gasket Joints: For concrete pipe laid with rubber gasket joints, any deviation from true alignment or grade which would result in a displacement from the normal position of the gasket of as much as 1/4 inch, or which would produce a gap exceeding 1/2 inch between sections of pipe for more than 1/3 of the circumference of the inside of the pipe, will not be acceptable and where such occurs the pipe

shall be relaid without additional compensation. Where minor imperfections in the manufacture of the pipe cause a gap greater than 1/2 inch between pipe sections, the joint will be acceptable provided the gap does not extend more than 1/3 the circumference of the inside of the pipe. No mortar, joint compound, or other filler which would tend to restrict the flexibility of the gasket joint shall be applied to the gap.

Field Joints for Elliptical Concrete Pipe: Field joints for elliptical concrete pipe will be detailed in the plans or may be made with a preformed plastic gasket material. Pipe to be laid with joints made from preformed plastic material shall be subject to the following requirements:

(1) General: Installation shall be in accordance with the manufacturer's instructions and these specifications. The Contractor shall be responsible for obtaining a permanent watertight joint.

(2) Material: The preformed gasket material shall conform to the requirements of Section W-942.

(3) Joint Design: The pipe manufacturer shall furnish the Engineer with details in regard to configuration of the joint and the amount of gasket material required to effect a satisfactory seal. Joint surfaces which are to be in contact with the gasket material shall not be brushed or wiped with a cement slurry. Minor voids may be filled with cement slurry provided that all excess cement slurry is removed from the joint surface at the point of manufacture.

(4) Primer: Prior to application of the gasket material, a primer of the type recommended by the manufacturer of the gasket material shall be applied to all joint surfaces which are to be in contact with the gasket material. The surface to be primed shall be thoroughly cleaned and dry when the primer is applied.

(5) Application of Gasket: Prior to placing a section of pipe in the trench, gasket material shall be applied to form a continuous gasket around the entire circumference of the leading edge of the tongue and the groove joint in accordance with the detail entitled "Detail for Application of Gasket Material (Before Joint Pull-Up)." The paper wrapper on the exterior surface of the gasket material shall be left in place until immediately prior to joining of sections. The gasket material shall be checked to assure that it is bonded to the joint surface, immediately prior to placing a joint in the trench. Plastic gasket material shall be applied only to surfaces which are dry. A hand heating device shall be kept at the job site to dry joint surfaces immediately before application of the plastic gasket material. When the atmospheric temperature is below 60 degrees F., plastic joint seal gaskets shall either be stored in an area warm to above 70 degrees F., or artificially warmed to this temperature in a manner satisfactory to the Engineer.

(6) Installation of Pipe: Handling of a section of pipe after the gasket material has been affixed shall be carefully controlled to avoid displacement of gaskets or contamination of gasket material with dirt or other foreign material. Any gasket displaced or contaminated in handling of the pipe shall be removed and repositioned or replaced as directed. The pipe shall be installed in a dry trench. The bottom of the trench shall be carefully shaped so as to minimize the need for realignment of sections of pipe after they are placed in the trench. Care shall be taken to

properly align each section of pipe prior to the gaskets coming into contact. Realignment of a joint after the gaskets come into contact tends to reduce the effectiveness of the seal and shall be held to a minimum. When the pipes are joined, the entire joint shall be filled with gasket material and there shall be evidence of squeeze-out of gasket material for the entire internal and external circumference of the joint. Excess material on the interior of the pipe shall be trimmed to provide a smooth interior surface. After the pipe is in its final position, the joint shall be carefully examined to determine that the gasket material is satisfactorily adhering to all surfaces of the joint and that the entire joint is filled with gasket material. If a joint is defective, the leading section of pipe shall be removed and the joint resealed.

Requirements for Concrete Radius Pipe:

Design: Concrete radius pipe shall be constructed in segments not longer than four feet (along the pipe centerline), except where another length is called for in the plans or the specific provisions. Each segment shall be joined by round rubber gaskets. The pipe manufacturer shall submit details of his proposed joint and the segment length and shape for approval by the Engineer prior to manufacture.

Pre-Assembly: Prior to acceptance of the pipe, the manufacturer shall pre-assemble the entire radius section in his yard to assure a proper fit for all parts. This assembly may be made without gaskets at the option of the manufacturer. Upon satisfactory assembly, the joints shall be consecutively numbered on both the interior and exterior surfaces of each joint, and match marks showing proper position of joints shall be made. Installation on the project shall be in the order of pre-assembly.

W-430.06 Field Joints for Aluminum Pipe

General: Field joints for aluminum pipe shall be made with bands fabricated of the same alloy as the culvert sheeting and shall meet the requirements of AASHTO M 196.

Aluminum Cross Drains, Storm Sewers, and Gutter Drains: The provisions specified above for corrugated steel pipe for these installations shall apply also to aluminum pipe (for circular and helical corrugations) except that the material used in the bands and band connections for the alternate combination of joint materials shall be fabricated of the same alloy as the culvert sheeting.

W-430.07 Joints in Cast Iron Pipe

The provisions of Section 430 for mortaring and wetting inside the joints, as specified for concrete side drain pipe without rubber gaskets, shall apply to the inside joints of all cast iron pipe.

SECTION 436 – TRENCH DRAINS

436-1 Description

Construct Trench Drain, with one of the materials listed below, for the purpose of collecting and conveying surface run-off from and across paved areas. Furnish and install trench drain in accordance with the Design Standards, at the locations shown in the plans or as directed by the Engineer. All trench drains shall comply with FDOT Index 206 Type II drains.

436-2 Materials

Provide preformed channels or pipe with sufficient strength to withstand construction handling and placement of concrete backfill without deforming or deviating from line and grade. Furnish the Engineer with certification from the manufacturer that the Trench Drain System meets the requirements of this Section.

436-2.1 Channel Slopes: Preformed channels must be available in various slopes to comply with invert elevations shown on the Construction Plans.

436-2.2 Concrete Backfill: Use concrete that meets the requirements of Section 346, except Section 346.6.1. Concrete shall be Class I, 3000 psi specifications.

436-2.3 Grates**:** Provide steel grates and supporting frames that meet the requirements of Section 962. Ductile iron frames and grates must meet the requirements of ASTM A536. Ensure that ductile iron grates and frames are compatible and from the same manufacturer. Frames must be anchored into the concrete backfill with studs bolts or lugs. Grates must have at least 30% open area and fasten securely to frames to avoid rattling, Grates must be removable for the entire channel length and have vandal resistant locking devices. Ensure that frames have a minimum of 4 inch long studs, bolts or lugs at all four corners.

436-2.4 End Treatment: Both ends of the trench drain shall include either a mitered end section or headwall as designated on the Construction Plans. Concrete used for end treatment shall meet requirements of Section 436-2.2.

436-3 Installation

Submit to the Engineer the proposed method of installation, noting any deviation from the manufacturer's recommendations. Place concrete backfill in the trench against undisturbed material at the sides and bottom of the trench in a manner that will prevent floating or shifting of the trench drain, and will prevent voids in, or segregation of the concrete. Tamp and spade to prevent honeycombing. Form the top surface to the lines shown in the plans. Remove any foreign material that falls into the trench prior to or during placement of concrete.

436-4 Method of Measurement

The quantity to be paid for will be plan quantity, in place and accepted. The plan quantity will be measured from the inside wall of the structure as shown on the plans, along the centerline of the pipe/channel.

436-5 Basis of Payment

Price and payment will be full compensation for all work specified in this Section, including all materials, tools, equipment, forms, grading, concrete backfilling, end treatment, connections to new or existing structures and all incidentals necessary to complete the work.

SECTION 571

WOOD FENCES & GATES

GENERAL

The work specified in this section consists of removing and installing wood fencing at the locations shown on the construction Plans and/or as directed by the Engineer. Meet the requirements of Section 954 for timber posts and braces.

REMOVAL AND CLEARING

Remove existing fence in a manner that the existing fence material is legally disposed. Install in kind following construction within the existing fence limits

Where the clearing and grubbing for the project includes the area occupied by the fence, clear the area to the limits shown in the plans. If the limits are not shown in the plans, clear the area at least 2 feet wide on each side of the existing fence location. Following construction activity, the finished ground will be cleared of rock and or debris which may conflict with the resetting of the existing fence or new materials. This is to be done at no additional compensation.

SUBMITTALS

Drawings: Indicate plan layout, grid, size and spacing of components, accessories, fittings, anchorage, and post section.

Data: Submit manufacturer's installation instructions and procedures, including details of fence and gate installation.

PRODUCTS

All wood materials shall be treated wood, or wood of a natural resistance to decay. Materials shall be free from loose knots, cracks, and other imperfections.

WOOD BOARDS OR SLATS

Wood boards or slats shall be between 3/8 inches and 5/8 inches thick and be no greater than 6 inches wide, or approved by the Engineer..

Buried post ends should be treated with an approved wood preservative product.

MEASUREMENT

Payment shall be made under the appropriate Contract Item Unit Price per linear foot.

SECTION 942 - GASKETS

W-942.01 Round Rubber Gaskets for Pipe Joints

Except where O-ring type gaskets are specified for special cases and for special type pipe, round rubber gaskets for use in concrete pipe joints shall meet the requirements of Article 6.9 of ASTM C 361, with the additional requirements that the gasket used shall be of such cross sectional area and perimeter as to properly fit the space provided in the pipe joint in which it is to be used.

Prior to use, the gasket shall be stored, in as cool a place as practicable.

W-942.02 Cold Adhesive Preformed Plastic Gaskets (For Sealing Elliptical Concrete Pipe Joints)

General:

Cold adhesive preformed plastic gaskets shall be of a material, shape, and size so as to effect a permanent watertight seal in joints of elliptical concrete pipe. A minimum of two pieces of gasket material shall be used in each joint.

The gasket material shall be protected by a two-piece removable wrapper. To facilitate application, the two-piece wrapper shall be so designed that one-half may be removed longitudinally without disturbing the other half.

The size of the gasket shall be in accordance with the manufacturer's recommendation for the particular joint in which it is to be used. However, the minimum size for each of the gaskets used in a joint shall be in accordance with the following:

Pipe Size (Inches)	Nominal Gasket Size (Inches)	Minimum Cross Section (Square Inches)
Up to 19 x 30	1 1/2	1.75
19 x 30 to 53 x 83	1 3/4	2.50
Over 53 x 83	2	3.25

The above minimum size requirements are based on a joint designed with a maximum taper of 10 degrees and an in-place annular space of approximately 1/4 inch.

Composition:

The gasket sealing the joints shall be produced from blends of refined hydrocarbon resins and plasticizing compounds reinforced with inert mineral filler. The material shall contain no solvents and shall not produce irritating fumes or obnoxious odors. The gasket shall not depend

on oxidizing, evaporation, or chemical action for its adhesive or cohesive strength.

The chemical composition of the gasket material shall meet the following requirements:

	Min.	Max.
Bitumen (petroleum plastic content) (% by weight)	50	70
Ash-Inert Mineral Matter (% by weight)	30	50
Volatile Matter @ 325 degrees F (% by weight)	2.0 Max.	

The gasket joint sealing compound when immersed for 30 days at ambient room temperature separately in 5% solution of caustic potash, a mixture of 5% hydrochloric acid, a 5% solution of sulfuric acid, and a saturated hydrogen sulfide solution shall show no visible deterioration.

The physical properties of the gasket joint sealing compound as shipped shall meet the following requirements:

	Min.	Max.
Specific Gravity @ 77 degrees F	1.20	1.35
Ductility @ 77 degrees (cm)	5.0	
Softening Point @ 77 degrees F	320 deg. F. Min.	
Penetration 77 degrees F (150 gms) 5 sec.	50	120

Certification:

The manufacturer of the gasket material shall furnish the Engineer certified test results covering each shipment of material to each project.

* * *

SECTION 2930
SODDING AND HYDROSEEDING

PART 1: GENERAL

1.01 DESCRIPTION

A. Provide sodded lawns and hydroseeding as shown and specified. The work includes:

1. Soil preparation.
2. Sodding lawns, hydroseeding, athletic fields, and other indicated areas.
3. Maintenance.

B. Related work:

1. Section 2900 Trees, Plants, and Ground Covers and FDOT Section 570 Turf

1.02 QUALITY ASSURANCE

A. Sod: Comply with American Sod Producers Association (ASPA) classes of sod materials.

B. Provide and pay for materials testing. Testing agency shall be acceptable to the Landscape Architect. Provide the following date:

1. Test representative materials samples proposed for use.

2. Soil analysis of existing conditions.

   a. Soil pH and recommendations for correction. Ideal pH for Bahia is 5.0 - 6.5.

   b. Nematode infestation check and recommendation for eradication.

   c. Organic matter check and recommendation.

   d. Starter fertilizer check and recommendations.

1.03 SUBMITTALS

A. Submit sod growers certification of grass species. Identify source location.

B. Submit the following material samples:

1. Topsoil.

C. Submit the following material certification:

1. Submit certificates of inspection as required by governmental authorities and manufacturers or vendors certified analysis for soil amendments, herbicides, insecticides and fertilizer materials; submit other data substantiating that materials comply with specified requirements.

D. Submit soil analysis report.

E. Bidders shall furnish, with their bid, evidence in writing that they maintain a permanent place or places of business and have adequate equipment, finances, and personnel to provide the specified services. This evidence shall include, but not be limited to: a list of current contracts, their value, and a contact person with each firm; at least three references who can verify work of a similar nature done by your firm in the last three year; a list of owned and/or leased equipment available for use on this contract; a list of key personnel and a brief summary of their qualifications. Failure to provide the listed material may cause the Bidder to be deemed non-responsive. The City reserves the right to inspect the apparent low Bidder's place of business and equipment prior to contract of any bid to determine the responsibility and capability of the Bidder to perform the services. The City also reserves the right to solicit references in making judgment on the Bidder's ability to perform said services.

1.04 DELIVERY, STORAGE AND HANDLING

A. Cut, deliver and install sod within a 24-hour period.

1. Do not harvest or transport sod when moisture content may adversely affect sod survival.

2. Protect sod from sun, wind, and dehydration prior to installation.

3. Do not tear, stretch, or drop sod during handling and installation.

1.05 PROJECT CONDITIONS

A. Work notification: Notify City of Tampa representative at least 7 working days prior to start of sodding operations.

B. Protect existing utilities, paving and other facilities from damage caused by sodding operations.

C. Perform sodding work only after planting and other work affecting ground surface has been completed.

D. Existing soil to be amended as determined necessary from soil analysis, including: soil pH, nematode infestation, organic matter check and starter fertilizer check.

E. Restrict traffic from lawn areas until grass is established.

F. Provide hose and lawn watering equipment as required.

G. The irrigation system will be installed prior to sodding. Locate, protect and maintain the irrigation system during sodding operations. Repair irrigation system components damaged during sodding operations at this contractor's expense.

1.06 WARRANTY

A. Provide a uniform stand of grass by watering, mowing and maintaining lawn areas until final acceptance and for a period of 90 days after acceptance. Resod or reseed areas, with specified materials, which fail to provide a uniform stand of grass until all affected areas are accepted by the City of Tampa representative.

PART 2: PRODUCTS

2.01 MATERIALS

A. Sod: An "approved" nursery grown sod composed of Argentine Bahia (Paspalum notatum "Argentine".

1. Provide well-rooted, healthy sod, free of diseases, nematodes and soil borne insects. Provide sod uniform in color, leaf texture, density, and free of weeds, undesirable grasses, stones, roots, thatch, and extraneous material; viable and capable of growth and development when planted.

2. Furnish sod machine stripped and of supplier's standard width, length, and Thickness: Uniformly 1" to 1-1/2" thick with clean cut edges. Mow sod before stripping.

3. Use equipment specifically designed for mixing the wood fiber, seed, fertilizer, tackifier and dye, and applying the slurry uniformly over the areas to be hydroseeded. Use wood fiber that is made of 100% hardwood or softwood and does not contain reprocessed wood or paper fibers. Ensure that a minimum of 50% of the fibers are equal to or greater than 0.15 inch in

length and a minimum of 50% of the fibers will be retained on a twenty-five mesh screen.

B. Fertilizer:

1. Granular, non-burning product composed of not less than 50% organic slow acting, guaranteed analysis professional fertilizer.

   a. Type A: Starter fertilizer containing 16% nitrogen, 4% phosphoric acid,
   and 8% potash by weight or similar approved composition.

   b. Type B: Top dressing fertilizer containing 31% nitrogen, 3% phosphoric acid, and 10% potash by weight or similar approved composition.

   c. Ground Limestone: Containing not less that 85% of total cabonates and Ground to such fineness that 50% will pass through a 100 mesh sieve and 90% will pass through a 20 mesh sieve.

C. Stakes

1. Steel, tee shaped pins, 4” head x 8” leg.

D. Water: Free of substance harmful to sod growth. Hoses or other methods of Transportation furnished by contractor.

E. Topsoil: Fertile, friable, natural topsoil of loamy character, without admixture of subsoil material, reasonably free from clay lumps, coarse sand stones, plants, roots and other foreign materials with an acidity level as specified by type of sod.

1. Identify source location of topsoil.
2. Topsoil shall be fertilized.

PART 3 EXECUTION

3.01 INSPECTION

A. Examine finish surfaces, grades, topsoil quality, and depth. Do not start sodding work until unsatisfactory conditions are corrected.

3.02 PREPARATION

A. If area to be sodded has existing grass or vegetative cover, apply a non-selective

Herbicide (Round-up) to area. Wait ten (10) days before continuing with prep work.

B. Loosen topsoil of lawn areas to minimum depth of 8". Remove stones over 1" in any dimension and sticks, roots, rubbish, and extraneous matter.

C. Add 2" topsoil or organic material as required from organic matter check. Till into top 8" of existing soil.

D. Grade lawn areas to smooth, free drainage and even surface with a loose, uniformly fine texture. Roll and rake, remove ridges and fill depressions as required to drain.

E. Apply limestone at rate determined by the soil test, to adjust pH of topsoil as specified in sod type. Distribute evenly by machine and incorporate thoroughly into topsoil.

F. Apply "Type A" fertilizer as specified by manufacturer. Apply fertilizer by mechanical rotary or drop type distributor, thoroughly and evenly incorporated with the soil to a depth of 3" by discing or other approved methods. Fertilize areas inaccessible to power equipment with hand tools and incorporate it into soil.

G. Dampen dry soil prior to sodding.

H. Restore prepared areas to specified condition if eroded, settled or otherwise distributed after fine grading and prior to sodding.

3.03 INSTALLATION

A. Lay sod to form a solid mass with tightly-fitted joints. Butt ends and sides of sod strips. Do not overlay edges. Stagger strips to offset joints in adjacent courses. Remove excess sod to avoid smothering of adjacent grass. Provide sod pad top flush with adjacent curbs, sidewalks, drains and seed areas.

B. Do not lay dormant sod or install sod on saturated soil.

C. Install initial row of sod in a straight line, beginning at bottom of slopes, perpendicular to direction of the sloped area. Place subsequent rows parallel to and lightly against previously installed row.

D. Peg sod on slopes greater than 3 to 1 to prevent slippage at a rate of 2 stakes per yd. of sod.

F. Water sod thoroughly with a fine spray immediately after laying.

G. Roll with light lawn roller to ensure contact with subgrade.

H. Sod indicated areas within contract limits and areas adjoining contract limits disturbed as a result of construction operations.

I. Top dress all seams of sodded area with specified topsoil.

J. Hydroseed: Mix fertilizer as required into the hydroseeding slurry. Mix seed into the slurry at rates in accordance with Design Standards, Index 104. Ensure that the dye does not contain growth or germination inhibiting chemicals. When polyacrylamide is used as part of hydroseeding mix, only anionic polymer formulation with free acrylamide monomer residual content of less than 0.05% is allowed. Cationic polyacrylamide shall not be used in any concentration. Do not spray polyacrylamide containing mixtures onto pavement. These may include tackifiers, flocculants or moistureholding compounds.

3.04 MAINTENANCE

A. Maintain sodded lawns for a period of at least 90 days after completion <u>and acceptance</u> of sodding operations and hydroseeding areas.

B. Maintain sodded lawn areas, including watering, spot weeding, mowing, Application of herbicides, fungicides, insecticides and resodding until a full, uniform stand of grass free of weed, undesirable grass species, disease, and insects is achieved and accepted by the City of Tampa representative.

1. Water sod thoroughly every 2 to 3 days, as required to establish proper rooting.

2. Repair, rework, and resod all areas that have washed out or are eroded. Replace undesirable or dead areas with new sod.

3. Mow lawn areas as soon as law top growth reaches a 3” height. Cut back to 2” height. Repeat mowing as required to maintain specified height. Not more than 40% of grass leaf shall be removed at any single mowing.
4. Apply “Type B” fertilizer to lawns approximately 30 days after sodding at a rate specified by the manufacturer. Apply with a mechanical rotary or drop type distributor. Thoroughly water into soil.

5. Apply herbicides as required to control weed growth or undesirable grass species.

6. Apply fungicides and insecticides as required to control disease and insects.

7. Hydroseed Turf: Perform all work necessary, including watering and fertilizing, to sustain an established turf until final acceptance, at no additional expense to the City. Provide the filling, leveling, and repairing of any washed or eroded areas, as may be necessary.

3.05 ACCEPTANCE

A. Inspection to determine acceptance of sodded lawns will be made by the Landscape architect, upon contractor's request. Provide notification at least 5 working days before requested inspection date.

   1. Sodded areas will be acceptable provided all requirements, including maintenance, have been complied with, and a healthy, even colored viable lawn is established, fee of weeds, undesirable grass species, disease, and insects.

B. Upon acceptance contractor shall maintain area for 90 days. At the end of this period contractor shall request a final request a final maintenance inspection for acceptance.

C. Upon acceptance at end of maintenance period the City of Tampa will assume lawn maintenance.

3.06 CLEANING

A. Perform cleaning during installation of the work and upon completion of the work. Remove from site all excess materials, debris, and equipment. Repair damage resulting from sodding operations.

WORKMANSHIP AND MATERIAL SPECIFICATIONS - WATER

GENERAL REQUIREMENTS

All materials shall be in accordance with these Material Specifications and shall, in no event, be less than that necessary to conform to the requirements of any applicable law, ordinances and codes. All materials or products that will be in contact with potable water shall be listed by the National Science Foundation (NSF-61 listed) or by an approved certifying agency as conforming to the requirements of ANSI/NSF-61.

Items designated to be "domestically manufactured" shall be manufactured, assembled and tested in their entirety within the United States of America or its territories. Items designated to be "domestically assembled" may be foreign-manufactured but shall be assembled and tested in their entirety within the United States of America or its territories. Items requiring a "domestic presence" may be foreign-manufactured and/or assembled and/or tested, but the manufacturer shall have a designated representative or agent located within the United States of America, and that representative or agent shall be available to provide on-site service if required by the City of Tampa Water Department (Department).

All materials shall be new, unused, and correctly designed. They shall be of standard first grade quality, produced by expert workmen, and intended for the use for which they are offered. Materials or equipment which, in the opinion of the Department, are inferior or are lower grade than indicated, specified or required, shall not be accepted. All materials used in this contract must be approved in advance by the Engineer. In conformance with section G-4.02 of these contract documents, any two items of the same kind, type or classification, and being used for identical types of service, shall be made by the same manufacturer. Unless approved in advance by the engineer, only one manufacturer may be used for each item under this contract.

POLYETHYLENE ENCASEMENT

1. GENERAL

Polyethylene encasement shall conform to the requirements of ANSI/AWWA C-105/A21.5 Method A and shall be 8-mil thick. Polyethylene encasement shall be installed on all buried ductile iron pipe, fittings, valves, and appurtenances where shown on the drawings or as directed by the Water Department as dictated by field conditions. It shall be blue in color.

2. PRODUCT

The raw material used to manufacture polyethylene encasement shall be Type 1, Class A Grade E-1 in accordance with ASTM D-1248

The polyethylene encasement shall meet the following test requirements:

Tensile Strength	1200 psi minimum
Elongation	300% minimum
Dielectric Strength	800 V/Mil thickness, minimum

Thickness	0.008” (8-mils (minimum nominal, with minus tolerance < 10% of nominal)
Melt Index	0.4 maximum

3. QUALITY CONTROL AND TESTING

When submitting for approval polyethylene not listed in Section 4, manufacturer shall include drawings and brochures that clearly indicate size, dimensions, weights, performance standards, etc. If this documentation is omitted, the polyethylene may be rejected at the sole option of the City.

4. MANUFACTURER

All polyethylene encasement shall be domestically manufactured.

TRANSITION COUPLING

1. GENERAL

Transition coupling shall be used to connect two plain end pipes of equal or slightly different outside diameters. Transition coupling shall also be used to connect different types of pipe. The transition coupling shall operate by placing two plain ends of pipe inside a rigid sleeve, and drawing in two compression glands upon two un-cut full circle gaskets to produce a seal between the ends of the rigid sleeve and the adjacent outside wall of the existing pipe.

2. PRODUCT

a. Transition coupling shall be composed of three parts: rigid sleeve, compression glands, and gaskets.

b. The rigid sleeve shall be manufactured of ferrous material that is protected against corrosion by epoxy coating or approved method during the working life of the fitting. The rigid sleeve shall be the "long-body" type.

c. The compression gland shall be manufactured of ferrous material that is protected against corrosion during the working life of the fitting by epoxy coating or approved method. The glands shall be drawn in mechanically by bolts and nuts made of high-strength, low-alloy steel such as "Corten", "Usalloy", or "ACIPalloy".

d. The gasket shall be EPDM. The gasket shall be resistant to permanent set during the working life of the fitting.

e. Transition coupling for nominal size pipe of 2-inch shall be capable of connecting McWane enamel cast iron pipe to 2-inch PVC, SDR 21, pipe. Working pressure ratings shall be:

Type of Pipe	Size (in.)	Rated Pressure	O.D.
McWane Cast Iron	2	200	2.50
McWane Cast Iron	2.25	200	2.75
PVC (SDR 21)	2	200	2.38

The transition coupling shall be manufactured to meet these stated diameters.

f. Transition coupling for nominal size pipe, 3-inch and greater, shall be capable of joining standard ductile iron pipe to pit cast iron pipe Class C-D, Asbestos-Cement pipe, PVC sch 40, PVC sch 80, or PVC pressure rated pipe. Transition coupling shall join different diameter pipes by the following means:

1) by a coupling designed for stated diameters,

2) by a coupling designed with a variable range using a compressible gasket,

3) by a coupling with a variable range using different gaskets,

4) or a coupling using any combination of described designs.

3. QUALITY CONTROL AND TESTING

When submitting for approval transition coupling not listed in Section 4, manufacturer include drawings and brochures that clearly indicate size, dimensions, weights, performance standards, etc. If this documentation is omitted, the transition coupling may be rejected at the sole option of the City.

4. MANUFACTURER

Transition coupling for nominal size pipe 2 to 3 inches shall be Baker 200, Ford FCI/2/3, Dresser 38/138/40, JCM 212, Rockwell 411/413/431/441/433, ROMAC 602 Viking Johnson, or approved equal.

Transition coupling for nominal size pipe 3-inches and greater shall be Baker 200/204/213, Ford FCI/2/3, Dresser 38/138/40/162, Rockwell 411/413/431/433/441, JCM 212, Mueller H1020, ROMAC 501/602 Viking Johnson, or approved equal.

BRASS FITTINGS

1. GENERAL

All brass fittings for service lines shall be included under this specification. Brass fittings include any and all required accessories.

2. PRODUCT

a. All fittings shall be manufactured of brass, cast and machined in accordance with AWWA Standard C-800, latest revision.

b. All fittings shall perform in accordance with AWWA C-800, latest revision.

c. All fittings shall be certified as suitable for contact with drinking water in accordance with ANSI/NSF Standard 61, Drinking Water Components – Health Effects, Section 8. Certification shall be by an accredited certification organization or by a laboratory able to demonstrate that the NSF 61 lead testing protocol was followed.

d. All brass fittings shall comply with Florida Administrative Code (F.A.C.) 62-555 (latest revision), the Safe Water Drinking Act, as amended, and the U.S Environmental Protection Agency (E.P.A.).

e. All brass fittings shall be made of a "No-Lead Brass", defined for this specification as brass alloy containing not more than one fourth of one percent (0.25% or less) total lead when used with respect to the wetted surfaces of the fitting, as defined by NSF/ANSI 61, Annex G and Annex F.

f. All brass fittings shall be integrally stamped or cast with the manufacturer's name <u>and</u> a marking or trademark identifying that the fitting contains a "no lead" brass alloy (as defined herein), e.g., 'NL', 'EB2', or 'FED', etc.

g. Manufacturer shall provide a copy of a letter from NSF International (on NSF letterhead) documenting compliance with NSF/ANSI 61 Annex F.

h. All curb stops/meter valves shall be full-port and have a flow passage area equivalent to the fitting outlet flow area.

i. Curb stops shall be of the ball valve design with a full-port opening ball no less than 3/4-inch. Curb stops shall be provided with padlock wings cast on stop body and operating tee cap to provide for locking the stop in closed position. Curb stops for use with copper or plastic service shall have an inlet connection with a compression joint and an outlet connection with female iron pipe thread (FIP), as manufactured by Ford Meter Box Company (FMBC) B41W; Mueller P-25170N; A.Y. McDonald 6102W-22, or approved equal. Curb stops with Inside Iron Pipe Thread (FIP) inlet connections and an Inside Iron Pipe Thread outlet connections shall be FBMC B11W, Mueller B-20200, A.Y. McDonald 6101W, or approved equal.

j. Meter valves shall be of the ball valve design with a full-port opening ball no less than 3/4-inch. Meter valves shall be provided with padlock wings cast on stop body and operating tee cap to provide for locking the stop in closed position. Meter valves for use with copper or plastic service shall have an inlet connection with a compression joint and a swivel nut outlet connection - angle meter valve: FBMC BA43W, Mueller P-24258N, A.Y. McDonald 4602B-22, or approved equal; straight meter valve: FBMC B43W, Mueller P-24350N, A.Y. McDonald 6100MW-22, or approved equal. Straight meter valves with Inside Iron Pipe Thread inlet (FIP) and a Meter Swivel Nut outlet connection shall be: FMBC B13W; Mueller B-24351N; A.Y. McDonald 6101MW, or approved equal.

k. Corporation stops shall be of the ball valve design. Corporation stop inlet connection shall be the AWWA Taper thread. The outlet connection shall be a CTS pack-joint for copper or plastic tubing. Corporation stops for sizes 3/4" – 2" shall be: FMBC FB-1000, A.Y. McDonald 4701B-22, Mueller P-25008N, or approved equal.

l. Meter re-setters shall be designed for use with standard 5/8"x3/4" and 1" water meters. Resetters shall be constructed from brass fittings conforming to the specifications herein, with copper riser pipes. An angle ball valve shall be provided on the inlet riser, saddle nuts and gaskets on inlet and outlet. Pipe connections shall be (nominal) male iron pipe size meter thread on both inlet and outlet. Meter re-setters shall be FMBC VB40 Series, Mueller B-24118R, A.Y. McDonald Series 18, or approved equal.

m. Branch connections shall be brass construction with copper compression joint inlet and male iron pipe size outlets, as manufactured by FMBC U48, Mueller P-15363N, A.Y. McDonald 08U2M, or approved equal.

3. QUALITY CONTROL AND TESTING

Certification of the aforementioned standards must be available and provided, if requested by the City of Tampa. If requested, an Affidavit of Compliance to these standards and specifications shall be signed and submitted by an officer of the manufacturing firm. When submitting for approval of brass fittings not listed in Section 3 & 4, include manufacturer drawings and brochures that clearly indicate size, dimensions, weights, performance standards, etc. If any of this documentation is omitted, the brass fittings may be rejected at the sole option of the City.

4. MANUFACTURER

The brass fittings shall be domestically manufactured by Mueller Company, Ford Meter Box Company, A.Y. McDonald Mfg. Company, or approved equal.

THREADED BRASS FITTINGS

1. GENERAL

Threaded brass fittings provided under this specification shall be manufactured in accordance with specifications stated herein.

2. PRODUCT

a. Threaded brass fittings ("Fittings") provided shall be manufactured in accordance with ANSI B16.15., 125 lb.

b. Fittings shall be of material conforming to ASTM B62 or B584.

c. Threads on all fittings shall be N.P.T. in conformance with ANSI B1.20.3, right hand and shall be smooth, clean and true to form.

d. Fittings shall be legibly cast or dye stamped such that the manufacturer's name, initial or other mark can be easily identified.

e. All fittings shall be certified as suitable for contact with drinking water in accordance with ANSI/NSF Standard 61, Drinking Water Components – Health Effects, Section 8. Certification shall be by an accredited certification organization or by a laboratory able to demonstrate that the NSF 61 lead testing protocol was followed.

f. All brass fittings shall comply with Florida Administrative Code (F.A.C.) 62-555 (latest revision), the Safe Water Drinking Act, as amended, and the U.S Environmental Protection Agency (E.P.A.).

g. All brass fittings shall be made of a "No-Lead Brass", defined for this specification as brass alloy containing not more than one fourth of one percent (0.25% or less) total lead when used with respect to the wetted surfaces of the fitting, as defined by NSF/ANSI 61, Annex G and Annex F.

h. All brass fittings shall be integrally stamped or cast with the manufacturer's name and a marking or trademark identifying that the fitting contains a "no lead" brass alloy (as defined herein), e.g., 'NL', 'EB2', or 'FED', etc.

i. Manufacturer shall provide a copy of a letter from NSF International (on NSF letterhead) documenting compliance with NSF/ANSI 61 Annex F.

3. QUALITY CONTROL AND TESTING

Certification of the aforementioned standards must be available and provided, if requested by the City of Tampa. If requested, an Affidavit of Compliance to these standards and specifications shall be signed and submitted by an officer of the manufacturing firm.

4. MANUFACTURER

None specified.

SERVICE SADDLES

1. GENERAL

Service saddles shall be used for tapping water distribution pipes to provide a drip-tight connection to the main for customers' water meters. Service saddles shall incorporate a wrap-around type body, straps, gasket and bolts. When installed, the body shall wrap around the main for a minimum of 160 degrees.

2. PRODUCTS

a. Service saddle for pipe less than 3-inches shall be single band which is hinged or split from the saddle body and is anchored by bolting one or more bolts between the band and saddle body, or a double strap design anchored by four bolts.

b. Service saddles for pipe equal to or greater than 3-inches shall use a double-wide single flexible band or a double strap with a minimum of a four bolt pattern anchoring. These service saddles shall provide for a variable range in diameter per nominal size of pipe, yet shall fit the stated diameter for the nominal size pipe noted.

c. Service saddles shall be constructed from bronze, ductile iron in accordance with ASTM A536, or stainless steel and shall seal to the distribution pipe by an EPDM rubber gasket. The gasket shall maintain a resilient seal without cracking or becoming brittle during the working life of the service saddle. All service saddles shall have corporation tap threads.

d. Threads shall be AWWA CC in accordance with AWWA C-800.

e. Gasket shall be of self-sealing design.

f. Service saddle bodies shall be protected with a heavy coating of corrosion resistant, metal primer.

g. Service saddles provided shall be suitable for use with water of 100 degrees Farenheit and pressure up to 150 psi without rupture and failure.

h. Straps and bolts shall be carbon steel confirming to ASTM A108, electro-galvanized with dichromate seal.

3. QUALITY CONTROL AND TESTING

When submitting for approval of a service saddle not listed in Section 4, include manufacturer drawings and brochures that clearly indicate size, dimensions, weights, performance standards, etc. If this documentation is omitted, the service saddle may be rejected at the sole option of the City.

4. MANUFACTURER

Service saddles for 2-inch or less pipe and 3-inch or greater pipe shall be as follows:

2-inch or less:

Clow 3401	Ford 570/590	JCM 401/402/403/405 (DI)
Jones J-995	Rockwell 313/317	Ford FS-/ FC-202; F101/202
Smith Blair 311		Mueller H-13420/10475-76

3-inch or greater:

Cascade C-S22/CDS2/CNS2/CSC2	Mueller H-105XX series
Rockwell 313 (DI) /317/323	Clow 3408/3410
JCM 402 cortin strap (for DIP)	Smith Blair 311
Ford FS- or FC-202 series	JCM 406 (for PVC)

or approved equal.

BLOW-OFF ASSEMBLY

1.0 GENERAL

Blow-off assemblies shall be used to remove sediments and stagnant water from non-looping or "dead-end" water lines.

2.0 PRODUCT

2.1 GENERAL

a. There are two approved Std. Construction Details for blow-off assemblies - one for four-inch and larger pipe, the second for two-inch pipe.

b. The Contractor shall furnish all parts for the complete assembly, including but not necessarily limited to gate valves, hydrant adapters, meter boxes, valve boxes, caps or plugs on the water main, a cap on the hydrant adapter, one MJ restraining device or MJ adapter for the cap or plug on the main and all related appurtenances.

c. The outlet shall have 2-1/2-inch fire hydrant threads and a cap.

2.2 BLOW-OFF ASSEMBLY for 4-INCH AND LARGER PIPE

a. Blow-off assembly shall connect to the end of the existing pipe through a tapped plug or cap. A two-inch corporation shall be threaded into the tapped cap/plug. Two-inch HDPE tube shall run from the two-inch corporation to a two-inch gate valve.

b. The gate valve shall have a standard operating nut and have a standard valve box, brought to grade in conformance with the appropriate standard detail.

c. Two-inch HDPE tubing shall run from the gate valve and terminate in 2-1/2-inch NST by 2-inch MIP brass hydrant adapter. The adapter shall have a threaded cap and shall be placed in a #37 meter box, set to grade.

2.3. BLOW-OFF ASSEMBLY for 2-INCH PIPE

a. A two-inch gate valve shall be installed on the two-inch pipe.

b. The gate valve shall have a standard operating nut and have a standard valve box, brought to grade, in conformance with the appropriate standard detail.

c. Two-inch HDPE tubing shall run from the gate valve and terminate in 2-1/2-inch NST by 2-inch MIP brass hydrant adapter. The adapter shall have a threaded cap and shall be placed in a #37 meter box, set to grade.

3. QUALITY CONTROL AND TESTING

The installation shall conform to the appropriate Standard Detail.

WATER METER BOXES & COVERS

1. GENERAL

HDPE (high density polyethylene) water meter boxes shall be manufactured in accordance with these specifications.

Meter box covers ("Covers") provided under this specification shall be ductile iron with hinged reading lid (where specified) or black HDPE without reading lid. Covers provided shall be designed to withstand incidental ("standard") loading or heavy traffic loading as specified herein.

Meter boxes and meter box covers provided shall be in accordance with City of Tampa Water Department "Standard Dimension Details" for meter boxes (see Std. Details 5.10, 5.10A, 5.11, 5.11A and 5.12).

2. PRODUCT

a. HDPE Meter Boxes

1) The HDPE meter box shall be 100% homogenous high-density polyethylene of one-piece molded construction, with dimensions as shown in the referenced drawings. The box shall be tested to withstand a freestanding 20,000 lb. vertical load and a sidewall loading of 180 pounds per square inch. All edges shall be clean and smooth for safety during handling. Exterior wall shall be of smooth finish, black in color, and have ultraviolet degradation protection properties for above ground storage. Interior wall shall be of smooth finish and color shall be black or white. Meter boxes shall not exceed 25 lbs. in weight, shall have pre-cut pipe entry areas, and shall be designed to be securely stackable.

b. Meter Box Covers

1) Ductile Iron Cover

i. All "standard" ductile iron (DI) meter box covers shall be manufactured to meet or exceed requirements of ASTM A-536 "Standard Specification for Ductile Iron Castings", latest edition, and shall be designed to meet the requirements for AASHTO Incidental Traffic H-10 loading. All "extra-heavy" covers shall meet the requirements for AASHTO Full Traffic H-20 loading.

ii. DI covers must be certified by the ductile iron manufacturer and by an independent testing laboratory. DI covers shall be designed and manufactured to withstand a minimum compressive load of 20,000 lbs. on a 9-inch square load area.

iii. All DI meter box cover castings shall be surface pre-treated with a phosphate wash, rinse, and sealer before drying. The coating shall be a polyester based powder (to provide corrosion, impact and UV resistance), electrostatically applied and heat-cured. The coating shall be Mega-Bond by EBAA Iron, or approved equal.

2) Ductile iron "standard" meter box covers shall include hinged reading-lids as specified in City of Tampa Water Department "Standard Dimension Details" for meter boxes. Extra-heavy covers shall be solid without reading-lids.

3) All HDPE "standard" meter box covers shall be polyethylene of one-piece molded construction, with dimensions and lettering as shown in the referenced meter box drawings.

4) All HDPE "standard" meter box covers shall be designed to meet the requirements for AASHTO Incidental Traffic H-10 loading. All HDPE "extra-heavy" covers shall meet the requirements for AASHTO Full Traffic H-20 loading.

5) Certification must be provided by the manufacturer and by an independent testing laboratory that lids provided meet the respective loading requirements.

6) All covers shall have UL/FM approvals.

7) All covers under this specification shall be sized to fit the appropriate Brooks Products, Inc., Orlando, Florida concrete meter boxes, numbers 36, 37, 66 and Dual H:

Description	¾" Dual	1" Single	1½"-2" Single
Meter Box Type	**Dual H**	**#37**	**#66**
Meter Box Cover	16-9/16" x 14-9/16"	18-1/8" x 11-1/4"	30-1/2" x 17-1/2"
Hinged Reading Lid	4-5/8" x 7-5/8"	4-5/8" x 7-5/8"	6½" x 9½"

7) Ductile iron reading lids shall be manufactured to meet or exceed requirements of ASTM A536, latest edition.

8) Reading lids shall be supplied with a slot for engaging a raising-hook, to permit reading the enclosed water meter without removing the box cover. Reading-lids shall be made of ductile iron, hinged, and secured in place by a suitable stainless steel (Type 304) hinge pin.

c. Meter boxes shall be dimensioned to accommodate meter box covers as specified.

3. QUALITY CONTROL AND TESTING

a. The Contractor shall furnish engineering performance data at the time of submittals for each size meter box and cover proposed for use. Such data shall contain but may not be limited to: 7-day and 28-day concrete compression tests, sieve analysis of aggregates, water/cement ratio and curing process, and any other applicable tests as required.

b. The Contractor shall furnish two sets of shop drawings at the time of submittals, for boxes and covers which differ from the standards. The shop drawings shall note the dimension, thickness and tolerances to allow review of material.

The Water Department may request that the Contractor furnish a sample of each type of

meter box and cover proposed for use. This sample shall be returned to the Contractor at the Contractor's expense. Failure to submit samples, if requested, may result in the rejection of the item.

c. All covers must offer a minimum of a full 10-year warranty against defects, breakage, etc., under normal use conditions.

4. MANUFACTURER

All covers shall be domestically manufactured. Meter boxes (and covers) provided shall be equal to or better than:

Old Castle Precast Enclosures, Mount Sterling, KY: "MSBCF Style" HDPE meter boxes

DFW Plastics models (HDPE meter box and HDPE cover):
(for ¾" or 1" meter set) DFW37C-1EA TPA-LID & DFW37C-12-BODY; DFW36C-1EA TPA-LID; (for ¾" or 1" dual meter set) DFW39C-1EA TPA-LID & DFW39C-12-BODY;
(for 1-1/2" or 2" meter set) DFW1730C-1EA TPA LID & DFW1730CH-12-BODY

RESTRAINT DEVICES for DUCTILE IRON PIPE
(for Push-on-, Mechanical-, and Flanged Joint Pipe and Fittings)

1. GENERAL

Mechanical restraint devices shall be used to restrain plain ends of ductile iron pipe to push-on, mechanical, or flange joints, or fittings which meet ANSI/AWWA C-110/A21.10 and ANSI/AWWA C-111/A21.11, latest revisions.

Wedge action restraint for mechanical and flange joint pipe and fittings shall be incorporated in the design of the follower gland and shall include a restraining mechanism (the lug) which, when activated, imparts multiple wedging actions against the pipe, thereby increasing its restraint on the pipe as the joint tries to separate. "Twist-off nuts" shall be used to ensure proper actuating of the restraining device.

2. PRODUCT

a. Push-on Joint Restraint (for 4" - 36" pipe only)

Restraint of push-on joint pipe shall be with "locking gaskets", consisting of an EPDM rubber gasket with high-strength stainless steel locking elements vulcanized into the gasket, which when activated develop wedging action between the pairs of stainless steel elements spaced around the gasket.

b. Flange Joint Restraint

Flange joint restraint fittings shall include all individually activated gripping wedges and gaskets. Flange joint restraint fittings shall attach to the plain end of a pipe by wedge screws to

produce a flange which joins to an existing integral companion flange. Flange joint restraint fittings shall be constructed of ductile iron meeting ASTM A536 and manufactured in accordance with ANSI/AWWA C-110/A21.10 (or C-153/A21.53) and C-111/A21.11, latest revision. All flanges shall have bolt circle and bolt holes which match a Class 125 flange and are compatible with ANSI/AWWA C-115/A21.15. Gasket shall be made of EPDM rubber.

c. Mechanical Joint Restraint

The wedge action follower glands shall be manufactured of ductile iron conforming to ASTM A536-80. The wedging lug and bolt shall be manufactured of ductile iron which has been heat-treated to a minimum hardness of 370 BHN.

Wedge action glands shall be dimensioned such that they can be used with standard mechanical joints and have tee-head bolts conforming to ANSI/AWWA C-111/A21.11 and ANSI/AWWA C-153/A21.53, latest revision.

d. Existing Pipe Joint Restraint

(1) Split-restraint fittings for mechanical joints on existing pipe installations shall be manufactured in accordance with these technical specifications; however, split-restraint fittings shall be segmented to allow restraint of existing ductile iron mechanical joints meeting AWWA C111.

(2) Split-restraint fittings for existing pipe bell-and-spigot joints shall consist of split restraint rings, one installed on the pipe barrel behind the bell. Restraint devices shall be ductile iron per ASTM A536, latest revision, min. Grade 60-42-12. Threaded rods shall be high strength low-alloy steel per AWWA C111, latest revision.

e. Coatings

(1) Flange Adapters shall be provided with painted "shop coat", or approved equal.

(2) Retainer glands shall be provided with a bituminous coat.

(3) Existing pipe push-on joint restraint fittings shall be provided with a bituminous coat.

3. QUALITY CONTROL AND TESTING

a. Pipe restrained with mechanical restraint devices specified shall be capable of withstanding the following pressures:

Push-on and Mechanical Joint Pipe -	4" - 16"	min. 350 psi
	>16"	min. 250 psi
Flanged Joint Pipe -	4" - 36"	min. 250 psi

b. Burst pressure tests shall be performed as specified in ANSI/AWWA111/A21.11, latest revision.

c. When submitting for approval of restraint devices not listed in Section 4, include manufacturer drawings and brochures that clearly indicate size, dimensions, weights, performance standards, etc. If this documentation is omitted, the restraint fittings may be rejected at the sole option of the City.

d. Pipe restrained with retainer glands specified shall be capable of withstanding twice the rated pressure of the restraint device for five minutes with no leakage or movement.

4. MANUFACTURER

a. Ductile iron pipe push-on joint restraint devices shall be U.S. Pipe "Field-Lok" Gasket, American "Fast-Grip" Gasket, or approved equal.

b. Ductile iron pipe flange joint restraint devices shall be approved, equal to, or better than EBAA Iron "Megaflange Series 2100" or "1000 EZ Flange", or Ford Meter Box Company "Uni-flange Series 400-C".

c. Wedge action restraint for ductile iron pipe mechanical joints shall be equal to or better than EBAA Iron "Megalug, Series 1100", Tyler/Union TUF Grip TLD, Sigma One-Lok Model SLD (4" to 36") or approved equal.

d. Split, wedge-action restraints devices for restraint of existing pipe and fitting joints shall be approved, equal to, or better than EBAA Iron "Megalug, Series 1100SD, or HD", or approved equal.

DUCTILE IRON PIPE
(Push-On-, Mechanical-, Flexible-, and Manufactured Restrained Joint)

1. GENERAL

Ductile iron pipe shall be domestically manufactured in accordance with the latest revision of ANSI/AWWA C-151/A21.51. Pipe shall be furnished in 18 or 20 foot laying lengths. Pipe shall be lined with a standard thickness cement mortar lining and seal coated in accordance with the latest revision of ANSI/AWWA C-104/A21.4 and NSF 61. Pipe outside coating shall be an asphaltic coating in accordance with ANSI/AWWA C-151/A21.51, latest revision. All pipe materials used in potable water systems shall comply with NSF Standard 61. Unrestrained joint pipe shall be either the rubber-ring compression-type push-on joint or mechanical joint.

2. PRODUCTS

a. Push-on Joint Pipe

Push-on joint pipe shall be supplied with all joint accessories. Accessories shall include gaskets and lubricant in sufficient quantity for the proper assembly of each joint. Gaskets for push-on joints shall be made of ethylene propylene diene monomer (EPDM) rubber, except: Acrylonitrile butadiene (NBR) gaskets shall be used for potable water mains that are located in soil that is contaminated with low molecular-weight petroleum products or non-chlorinated organic solvents or non-aromatic organic

solvents. Fluorocarbon (FKM) gaskets shall be used for potable water mains that are located in soil that is contaminated with aromatic hydrocarbons or chlorinated hydrocarbons. Fluorocarbon (FKM) gaskets shall be used for potable water mains if the soil is contaminated with aromatic hydrocarbons or chlorinated hydrocarbons, and is also contaminated with low molecular-weight petroleum products or organic solvents. All plain ends shall be painted with a circular stripe on the pipe barrel to allow a visual means of checking proper assembly.

- All push-on joints shall be in accordance with ANSI/AWWA C-111/A21.11, latest revision.

- Pressure Class shall be as follows:

Diameter	Min. Pressure Class
4” to 16"	350
> 16"	250

b. Mechanical Joint Pipe

- Mechanical joint pipe shall be supplied with all joint accessories. Accessories shall include lubricant, gaskets, ductile iron glands, bolts, and nuts, all in sufficient quantity for the assembly of each joint. The bolts and nuts shall be manufactured of high-strength, low-alloy steel such as "Corten", "Usalloy", or "Acipalloy". The follower gland shall be ductile iron. Gaskets for mechanical joints shall be made of ethylene propylene diene (EPDM) rubber.

- All mechanical joints shall be in accordance with ANSI/AWWA C-111/A21.11, latest revision.

- Pressure Class shall be as follows:

Diameter	Min. Pressure Class
4” - 16"	350
> 16"	250

c. Flexible Joint Pipe

- Flexible-joint pipe shall be push-on, ball-and-socket, freely deflecting, and restrained using a corrosion resistant locking device. Thickness class shall be as follows:

Diameter	Min. Thickness Class
6”	54
8”	55
12”	56
16”	57

The joint shall be capable of a full 15° free deflection with no reduction in the waterway.

d. Manufactured Restrained Joint Pipe

- Joints shall be push-on in accordance with ANSI/AWWA C-111/A21.11. Joints shall be secured by wedged locking shims or a follower gland which shoulder against a retaining ring permanently fastened to the spigot end of the pipe within the joint. Gaskets for manufactured restrained pipe joints shall be made of EPDM rubber.

- Pressure Class shall be as follows:

Diameter		Min. Pressure Class
4' - 16"	→	350
> 16"		250

3. QUALITY CONTROL AND TESTING

a. All pipe shall meet or exceed all hydrostatic, performance and acceptance tests as set forth in ANSI/AWWA C-151/A21.51, latest revision.

b. When submitting for approval of ductile iron pipe not listed in Section 4, include manufacturer drawings and brochures that clearly indicate size, dimensions, weights, pressure class or thickness class, performance standards, etc. If this documentation is omitted, the ductile iron pipe may be rejected at the sole option of the City.

4. MANUFACTURER

a. All ductile iron pipe, unless specified below, shall be by U.S Pipe, American Cast Iron Pipe Company, McWane Cast Iron Pipe Company, Griffin Pipe Products Company, or approved equal.

b. Flexible Joint pipe shall be American Ductile Iron "Flex-Lok Boltless Ball Joint Pipe", U.S. Pipe "USI FLEX Boltless Flexible Joint Pipe", Griffin Pipe Products "Snap-Lok River Crossing Pipe", or approved equal.

c. Manufactured Restrained Joint pipe shall be American Ductile Iron "Flexring", U.S. Pipe "TR-Flex", McWane Cast Iron Pipe Company "Super-Lock" (20" & 24" pipe) and "Thrust-Lock" (30" &36"), Griffin Pipe Products "Snap-Lok", or approved equal.

d. All ductile iron pipe shall be domestically manufactured in the United States.

HDPE TUBING

1. GENERAL

a. All water service lines two (2) inches in diameter and smaller shall be constructed of high-density polyethylene (HDPE) tubing.

2. PRODUCT

a. Polyethylene extrusion compound from which the PE pipe and tubing are extruded shall comply with the applicable requirements for the Type III, color and U.V. code E, Class C, PE 4710, very high molecular weight polyethylene plastic material manufactured in accordance with AWWA C-901, latest revision, as specified in ASTM D1248. 2-inch and smaller HDPE pressure tubing shall have a color and ultraviolet code E and a minimum cell classification of PE 454474 E as specified in ASTM D3350.

b. The polyethylene extrusion compound shall be of virgin quality approved for potable water service by the National Sanitation Foundation. The polyethylene extrusion compound shall be manufactured with sufficient and proper ultra-violet color stabilizers.

c. Polyethylene tubing shall be SDR-9 200 psi.

d. The standard dimension ratio (SDR) shall be 9 for CTS tubing sizes. The average outside diameter, minimum wall thickness and respective tolerances for any cross-section shall be as specified in ASTM D2737. The average inside diameter, minimum wall thickness, and respective tolerances for any cross-section shall be as specified in ASTM D2239.

e. Polyethylene tubing shall be blue and have U.V. color stabilizers so that the pipe is not affected in color or flexibility for a minimum of four (4) years.

3. QUALITY CONTROL AND TESTING

a. Environmental stress cracking resistance testing shall be performed in accordance with ASTM D1693, Condition C, and shall have no failures after 5000 hours duration.

b. When submitting for approval of HDPE not listed in Section 4, include manufacturer drawings and brochures that clearly indicate size, dimensions, weights, performance standards, etc. If this documentation is omitted, the HDPE may be rejected at the sole option of the City.

4. MANUFACTURER

All HDPE tubing shall be manufactured by Performance Pipes "DriscoPlex", Endot EndoPure", Vanguard "Bruiser", Charter Plastics "Blue Ice" or approved equal.

PVC (Polyvinyl Chloride) WATER PIPE

1. GENERAL

All PVC pressure pipe shall be manufactured in accordance with AWWA Standard C-900, latest revision.

2. PRODUCT

a. Pipe - PVC pipe, 4" through 8", shall be DR-18 pressure class 235 with ductile iron pipe equivalent ODs. The pipe shall be approved by the National Sanitation Foundation for use as a potable water main. The pipe color shall be blue and the nominal laying length per pipe section shall be 20 ft.

b. Joints - Joints shall be "push-on" and shall be made by joining pipe spigot end and integral wall-thickened bell end. All joints shall meet all requirements of ASTM Standard D3139. Each bell shall be an integral-wall section joint assembly using elastomeric-gasket seals. All gaskets shall meet all requirements for performance as specified by ASTM F-477. All integral joint gaskets shall be made of EDPM rubber.

c. Restraints - Joint restraint provided shall be with mechanical systems designed for:

1) restraint of PVC pipe bell-and-spigots, such as the Uniflange 1350C, Uniflange 1390C, Megalug 1600, Sigma PV-Lok Series PVP, or approved equal.

2) restraint of PVC pipe spigot-end to mechanical joint of fittings or valves, such as the Megalug 2000PV, Tyler/Union TUF Grip TLP, Uniflange 1300C, Sigma One-Lok Models SLC or PVM, or approved equal.

Restraining devices shall meet or exceed all requirements of ASTM F1674 “Standard Test Method for Joint Restraint Products for Use with PVC Pipe”.

d. Service Taps- All service taps on PVC mains shall require a service saddle, manufactured specifically for PVC pipe, equal to or better than Ford FS- or FC-202, or JCM 406. The cutting tool shall be a shell type for PVC pipe (hole) cutter with internal teeth or double slots and be designed to accommodate AWWA C-900 pipe (twist drill bits and auger bits shall be prohibited). The saddles used should provide full support around the circumference of the pipe and provide a bearing area of sufficient width along the axis of the pipe (2” minimum), ensuring that the pipe will not be distorted when the saddle is tightened.

3. QUALITY CONTROL AND TESTING

All pipe shall meet or exceed all hydrostatic, performance and acceptance tests as set forth in AWWA C-900, latest revision.

Prior to shipment of the pipe to the project site, the Contractor shall submit to the Engineer, test reports and certifications as described below duly certified by the manufacturer's testing facility or an independent certified testing laboratory demonstrating full compliance with AWWA C-900. Certification from the supplier is not acceptable.

An original plus four (4) copies of the following shall be submitted to the Engineer:

1. Name, address, and phone number of the pipe manufacturer and the location of the plant at which they will be manufactured.

2. Notarized certificates of conformance that each lot of pipe has been manufactured, sampled, and tested per AWWA C-900. The City shall be provided in writing the means to cross-

reference the markings with the certification and test reports (i.e. date of manufacturer, a lot number and shift number etc.) If this information is marked on the pipe in a code, the markings shall be decoded in writing.

4. MANUFACTURER

All un-restrained push-on joint C-900 PVC DR18 pipe shall be domestically manufactured and shall be equal to or better than Vasallo C-900, Diamond Plastics C-900, North American Pipe Corporation C-900, or JM C-900 PVC pipe; restrained joint PVC pipe shall be equal to or better than JM Eagle "Eagle Loc 900", or CertainTeed Certa-Lok C900/C905 RJ PVC.

GATE AND TAPPING VALVES, RESILIENT SEAT

1. GENERAL

All gate valves shall conform to AWWA C-509 or AWWA C-515 and requirements contained herein.

2. PRODUCT

AWWA C-509 VALVES (Cast Iron or Ductile Iron) and AWWA C-515 (Ductile Iron)

a. General

1) Resilient Seat Gate Vales ("Valves") provided under this specification shall be suitable for installation on ductile iron or cast iron pipe, and C-900 PVC. Valves shall be manufactured in accordance with AWWA C-509 or AWWA C-515, latest editions, as applicable, and as specified herein.

2) "Standard valves" shall refer to resilient seat gate valves with mechanical joints at both ends meeting specifications stated herein.

3) "Tapping valves" shall refer to resilient seat gate valves with one end mechanical joint, and one end flanged, meeting specifications stated herein.

4) Resilient seats for valves shall be made of EPDM rubber.

5) Mechanical joint gaskets shall be made of EPDM rubber.

b. Standard and Tapping Valves

1) Valves shall be of the non-rising stem type that shall open by turning a two-inch square AWWA operating nut clockwise (open right).

2) Valve stems shall be stainless steel and manufactured in accordance with AWWA C-509/C-515. Stems, stem-nuts and wedges shall act independently. Stems shall be sealed by at least two

O-ring seals, one located both above and below the thrust collar. Stems shall be provided with low friction torque reducing thrust bearings. Thrust washers may be used to separate the thrust collar from iron surfaces.

3) Valve bodies and gates shall be cast iron or ductile iron manufactured in accordance with ASTM A126 or ASTM A536 respectively, and AWWA C-509 or AWWA C-515 as applicable, latest revisions. All internal and external exposed ferrous surfaces of the valve body and gate shall have an epoxy coating applied to a minimum of eight mils, in accordance with AWWA C-550 latest edition. Non-metallic resilient seats shall be bonded to the gate; mechanically attached seats will not be accepted. The method of bonding shall be approved by ASTM D429 A or B as specified in AWWA C-509/C-515. Hollow gates shall be provided with a drain in the bottom to flush the internal cavity of foreign material and stagnant water each time the valve is operated.

4) All bonnet bolts, gland bolts, nuts and other trim hardware exposed to the outside environment shall be stainless. Thrust collar tie-rod bolts shall be stainless steel.

5) Mechanical joints and accessories shall be manufactured in accordance with AWWA Standard C110 and C111, latest revision, with exceptions noted herein. Mechanical joint bolts-and-nuts shall be manufactured of high-strength, low-alloy steel such as "Corten", "USalloy", or "ACIPalloy". Joints requiring a shorter bolt than called for in AWWA Standard C111 shall be supplied as required. Mechanical joint gaskets shall be made of EPDM rubber.

c. Tapping Valves

1) Tapping valve interior waterway shall be a full-opening and capable of passing a full-sized shell cutter through the valve.Tapping valve shall be provided with a tapping-flange and flanged joint accessories. Tapping-flanges shall conform to dimensions and drillings of ANSI B16.1, Class 125, ANSI/AWWA C110/A21.10 latest edition, and NAPF 200.

2) Tapping-flange shall have a raised face or lip designed to engage a corresponding recess in a tapping sleeve as defined in MSS SP-60. Mechanical joint accessories shall be provided for mechanical joint end as stated above.

3) All tapping valves shall be interchangeable with multiple makes of tapping sleeves.

4) Mechanical joint gasket shall be made of EPDM rubber.

3. QUALITY CONTROL AND TESTING

a. Catalogs and maintenance data shall be provided as required by the Engineer. The catalogs and maintenance data shall contain sufficient detail to serve as a guide in the valve assembly, valve disassembly, the ordering of repair parts, complete valve lubrication and valve maintenance information.

b. Valves shall meet or exceed test specifications as set forth in AWWA C-509/C-515, latest editions, as applicable.

c. The Water Department may request samples of proposed valves. Samples shall be supplied

and/or returned to the Contractor at the Contractor's expense.

d. Failure to submit samples within 10 calendar days after the date of a written request shall result in rejection of that item.

e. Bolt manufacturer's certification of compliance shall be provided with each mechanical joint accessory package.

f. The resilient seat shall be bubble-tight against a 200-psi water working pressure and maintain zero leakage at all times.

4. MANUFACTURER

a. Standard valves shall be domestically assembled and shall be Clow F-6100, U. S. Pipe Metroseal 250, AVK Series 25, Mueller Co. (2360 for 2"-12", 2361 for 14"-24"), American Flow Control Series 500 or Series 2500, Kennedy KenSeal 4571, or approved equal.

Tapping valves shall be domestically assembled and shall be equal to or better than Clow F-6114, U. S. Pipe Metroseal 250, Mueller Co. (2360 for 2"-12", 2361 for 14"-24"), American Flow Control Series 500 or Series 2500, Kennedy KenSeal 7571, American AVK Series 25, or approved equal.

2" GATE VALVE, RESILIENT SEAT

1. GENERAL

Resilient Seat Gate Valves (Valves) provided, push-on or threaded joint shall be manufactured in accordance with AWWA C-509 latest edition and as specified herein. The valves described in these technical specifications are to be furnished including accessories.

2. PRODUCT

a. Valves shall be the non-rising stem type that shall open by turning a 2-inch square AWWA operating nut clockwise, open right.

b. The wedge shall be bronze manufactured in accordance with ASTM B62. It shall be fully encapsulated with rubber molded in place and bonded in accordance with ASTM D429. The wedge rubber coating shall be ethylene propylene diene (EPDM) rubber. Rubber mechanically attached with screws rivets and similar fasteners shall not be acceptable.

c. Stems shall be sealed by a minimum of two O-rings; stem seals shall be replaceable with the valve full open and while subjected to full rated pressure.

d. Low friction torque reduction thrust bearings shall be located both above and below the stem collar.

e. All bonnet bolts, gland bolts, nuts and other trim hardware exposed to the outside

environment shall be stainless. Thrust collar tie-rod bolts shall be stainless steel.

f. The valve shall be coated inside and out by epoxy coating meeting AWWA C-550, latest edition.

g. Valve Ends:

1) Valve ends for push-on joint valves shall conform to AWWA C-111 latest edition and shall be suitable for use with iron pipe size plastic pipe as well as iron pipe.

2) Valve ends for threaded joint valves shall have female iron pipe connections compatible with N.P.T. threads as specified in AWWA C-800.

3. QUALITY CONTROL AND TESTING

a. Valves shall meet or exceed all testing requirements set forth in AWWA C-509, latest edition.

b. Certified shop drawings showing the valves to be in conformance with these technical specifications and referenced standards shall be required at the City's request. Failure to submit shop drawings upon request shall result in rejection of the valve.

4. MANUFACTURER

All valves shall be domestically assembled and shall be equal to or better than the following:

a. Push-on end valves - Clow 6110 (for PVC) / 6100 (for MJ), Waterous Series 500 - P.O.

b. Threaded end valves - Clow 6103, Waterous Series 500 – Threaded

c. American Flow Control, or AVK.

INSERTION VALVES (4” to 12”)

1. GENERAL

Insertion valves shall be installed in live cast iron, ductile iron, C-900 PVC, and asbestos cement pipelines without the requiring shut down of water flow through the pipe. The design should allow the valve to be installed into an existing pressurized pipeline while maintaining constant pressure and service as usual. The insertion valves provided shall be true resilient seat gate valves that will remain in the water distribution piping system. Insertion valves must safely operate in balanced and unbalanced pressure situations.

2. PRODUCT

a. Insertion valve shall be capable of pressure-tight assembly to the exterior of the pipe in which flow is to be stopped at a working pressure not to exceed 250 psi.

b. Resilient Seat Gate Valve shall:

1) have a 2” standard (square) operating nut NRS (non-rising stem)

2) open and close through AWWA standard turns per inch

3) open right

4) meet or exceed ANSI\AWWA C-515 or C-509 Standards

5) have a body of two-piece ductile iron casting manufactured to specifications of ASTM A536 65-45-12 with minimum 8-mil epoxy E coating inside and out that meets or exceeds ANSI\AWWA C-550 Standards, and is certified to ANSI\NSF 61

6) have a valve body that provides full mechanical protection of the pipe, and that is permanently restrained to the pipe

7) have a ductile iron wedge, encapsulated with EPDM rubber

8) have a triple O-ring seal stuffing box (2 upper and 1 lower O-rings)

9) stainless steel fasteners, and valve stem (min. 304SS)

10) operate at 250 psi maximum working pressure

c. All gaskets and o-rings to remain with the valve upon completion shall be EPDM rubber.

d. A ¾” NPT test plug shall be provided on the outlet throat of the sleeve for pressure testing the sealed sleeve at 150 psi prior to cutting the pipe.

e. The tapping cutter shall extract the coupon from the cut pipeline.

f. Restraint devices connecting the valve body castings to the pipe shall be split EBAA Mega-lug, or approved equal, with a working pressure rating of 350 psi for 4-12 inch, and 250 psi for pipe larger than 12-inch. Gland body, wedges, and wedge-actuating components shall be cast from grade 65-45-12 ductile iron material in accordance with ASTM A536. Torque limiting twist off nuts shall be included to ensure proper actuating of the gripping wedges.

3. QUALITY CONTROL

a. Valves shall meet or exceed test specifications as set forth in AWWA C-509 (or AWWA C-515) these specifications herein, latest editions, as applicable.

b. The resilient seat shall be bubble-tight against a 250-psi water working pressure and maintain zero leakage at all times.

4. MANUFACTURER

Insertion valves shall be TEAM Resilient Wedge InsertValve, or approved equal.

VALVE BOXES
(Class 35 Grey Iron)

1. GENERAL

Valve boxes provided under this specification shall be designed to provide access to an underground valve 2-inch operating nut at a depth of 2-feet or greater. Valve boxes shall be suitable for installation in areas subject to heavy vehicle traffic loading.

2. PRODUCT

Valve boxes shall include removable valve box cover with "WATER" label as shown on the Standard Dimension detail titled "Valve Box". All valve boxes shall be manufactured of Class 35 grey iron. All valve boxes shall consist of four parts: valve box covers, risers, top sections, and bottom sections. All valve boxes shall be the same dimension, within manufacturing tolerances, as shown in Standard Dimension Detail "Valve Box".

3. QUALITY CONTROL AND TESTING

When submitting for approval of valve boxes not listed in Section 4, include manufacturer drawings and brochures that clearly indicate size, dimensions, weights, performance standards, etc. If this documentation is omitted, the valve boxes may be rejected at the sole option of the City.

4. MANUFACTURER

Valve box manufacturers shall have a domestic presence. Valve boxes shall be equal to or better than those made by Union Foundry, Sunshine Foundry, or Pipeline Components, Inc.

COMPACT ANCHOR FITTINGS - DUCTILE IRON

1.0 GENERAL

Ductile Iron Compact Anchor Fittings ("Fittings") provided under this specification shall be manufactured in accordance with AWWA Standard C-153 and C-111, latest editions, and as specified herein. Joint accessories shall be provided with fittings.

2.0 PRODUCT

a. Tees

(1) Both joints on the run of all anchor tees shall be mechanical joint in accordance with AWWA Standard C-111, latest edition.

(2) All mechanical joints shall be supplied with a joint accessories package (bolts, nuts and gasket) as part of the anchor fitting. MJ Gaskets shall be made of EPDM rubber formulated to resist chloramine degradation. All anchor fittings shall be compatible with mechanical joint connections in accordance with AWWA C-111, latest edition, and shall be capable of mechanical restraint so as to eliminate the need for additional thrust restraints.

(3) The standard anchor tee branch shall have an anchoring "plain end" which includes an integral or split follower gland, suitable for connecting to mechanical joint fitting meeting ANSI/AWWA C-111/A 21.11.

b. Anchor Elbow and Anchor Coupling

The Anchor x Anchor elbows and anchor couplings shall have for both ends anchoring "plain ends". These "plain ends" shall have integral or split follower glands, suitable for mechanical joint fittings meeting ANSI/AWWA C-111/A 21.11.

c. Joint Accessories

(1) All T-head bolts and nuts for joints shall be domestically manufactured high-strength, low-alloy steel such as "Corten", "Usalloy," or "ACIPalloy."

(2) All joint accessories shall be furnished with anchoring fittings.

(3) All gaskets shall be EPDM rubber.

d. All anchoring fittings shall be furnished with either: i) a standard thickness cement mortar lining seal coated in accordance with AWWA Standard C-104, latest edition, and an exterior, asphalt coating which conforms to ANSI/AWWA C-151/A21.51; or, ii) have factory-applied fusion bonded epoxy coatings both inside and outside, in accordance with AWWA C550.

e. All fittings shall have a minimum pressure rating of 350 psi.

3.0 QUALITY CONTROL AND TESTING

a. All anchor fittings shall meet or exceed acceptance, performance and hydrostatic testing in accordance with AWWA Standard C-153 and C-111, latest editions.

b. When submitting for approval of ductile iron compact anchor fittings not listed in Section 4, include manufacturer drawings and brochures that clearly indicate size, dimensions, weights, performance standards, etc. If this documentation is omitted, the ductile iron compact anchor fittings may be rejected at the sole option of the City.

4.0 MANUFACTURER

Ductile iron compact anchor fittings shall be manufactured by U.S. Pipe and Foundry Company, Clow, American Ductile Iron Pipe, McWane, Pipeline Components, Inc. or approved equal.

1. GENERAL

a. Ductile iron compact mechanical joint fittings shall be manufactured in accordance with ANSI/AWWA C-153/A21.53, latest revisions and the specifications stated herein. Fittings shall be listed by the National Sanitation Foundation (NSF) and shall conform to the requirements of NSF-61.

b. Whenever the word "fitting" is used in this specification, it shall mean "Compact Ductile Iron Mechanical Joint Fitting".

2. PRODUCT

a. For fittings larger than 16-inches physical and chemical properties shall be in accordance with ANSI/AWWA C153/A21.53, latest revision. The minimum working pressure for fittings shall be 350. The minimum wall thickness shall not be less than that of pressure class 350 ductile iron pipe.

b. Joints shall be Mechanical Joint in accordance with ANSI/AWWA C111/A21.11 and C153/A21.53, latest revision, with exceptions noted herein. Mechanical Joint bolts and nuts shall be domestically manufactured of high-strength, low-alloy steel such as "Corten", "Usalloy", or "ACIPalloy". Joints requiring a shorter bolt than called for in ANSI/AWWA C111/A21.11 shall be supplied as required. Gaskets for mechanical joints shall be made of ethylene propylene diene (EPDM) rubber.

c. Exterior Coating and Interior Lining

Mechanical Joint fittings furnished shall have either of the exterior coating and interior lining systems described below:

(1) Cement Mortar Lining: Fittings furnished shall have a standard thickness cement mortar lining and be seal coated in accordance with ANSI/AWWA C-104/A21.4, latest revision. Fittings shall be listed by an approved certifying agency as conforming to all requirements of ANSI/NSF 61 and shall have an asphalt exterior coating which conforms to ANSI/AWWA C-153/A21.53.

(2) Fusion-bonded Epoxy: Fittings shall be coated inside and out with fusion-bonded epoxy, and be in conformance with the requirements of ANSI/AWWA C-116/A21.16 and AWWA C-550, latest revisions. Fittings shall be listed by NSF or by an approved certifying agency as conforming to all requirements of ANSI/NSF 61.

3. QUALITY CONTROL AND TESTING

a. All fittings specified herein shall meet or exceed all hydrostatic, performance, and acceptance tests in accordance with ANSI/AWWA C153/A21.53 latest revision.

b. When submitting for approval ductile iron compact MJ fittings not listed in Section 4, include manufacturer drawings and brochures that clearly indicate size, dimensions, weights,

performance standards, etc. If this documentation is omitted, the ductile iron compact MJ fittings may be rejected at the sole option of the City.

4. MANUFACTURER

All manufacturers of ductile iron compact MJ fittings specified herein shall have a domestic presence. The fittings shall be manufactured by U.S. Pipe, Clow, Tyler/Union Pipe, American Ductile Iron Pipe, McWane, Pipeline Components, Inc., Sigma, Star Pipe, or approved equal.

FLANGED FITTINGS (Standard Class 125

1. GENERAL

All standard class 125 flanged fittings shall be manufactured in accordance with ANSI/AWWA Standard C-110/A21.10 and NAPF 200, latest revision.

2. PRODUCT

a. Standard class 125 flanged fittings shall have a minimum pressure rating of 250 psi. Flanges shall be round type, faced and drilled and shall conform to ANSI B16.1 for cast-iron or bronze pipe flange Class 125.

b. The joints shall be flanged in accordance with ANSI/AWWA C-110/A21.10 and NAPF 200, latest revision. All necessary hex-head bolts and nuts, and full-faced gaskets for each joint shall be furnished as a Flange Accessory Package and shall conform to ANSI B18.2.2; threads shall be manufactured in accordance with ANSI B1.1. Bolts and nuts shall be high-strength, low-alloy steel such as "Corten", "Usalloy", or "ACIPalloy". Bolt circle and bolt holes shall be drilled and faced to match American National Standard Institute (ANSI) B16.1, Class 125 Flanges.

c. All standard class 125 flanged fittings shall have a standard thickness cement mortar lining and shall be seal coated in accordance with AWWA Standard C-104, latest revision.

3. QUALITY CONTROL AND TESTING

a. All standard class 125 flanged fittings shall meet or exceed all test standards set forth in AWWA C-110.

b. When submitting for approval of standard class 125 flanged fittings not listed in Section 4, include manufacturer drawings and brochures that clearly indicate size, dimensions, weights, performance standards, etc. If this documentation is omitted, the standard class 125 flanged fittings may be rejected at the sole option of the City.

4. MANUFACTURER

Standard class 125 flanged fittings shall be manufactured by U.S. Pipe and Foundry Co., American Ductile Iron Pipe, PCI, Tyler-Union, Sigma, or approved equal.

OFFSETS
(Ductile Iron, Mechanical Joint)

1. GENERAL

All ductile iron mechanical joint offsets shall be of ductile iron and manufactured in accordance with and ANSI/AWWA Standards C-110/A21.10 (or C-153/A21.53) and C-111/A21.11, latest revisions.

2. PRODUCT

a. Ductile iron mechanical joint offsets shall have a minimum pressure rating of 350 psi.

b. Joints shall be mechanical joints in accordance with C-111/A21.11, latest revision. All joint accessories shall be furnished with the fittings. Mechanical joint bolts and nuts shall be domestically manufactured of high-strength, low-alloy steel such as "Corten", "Usalloy", or "ACIPalloy". The follower gland shall be manufactured from ductile iron. The gasket shall be made of EPDM rubber.

c. Mechanical Joint fittings furnished shall have either of the exterior coating and interior lining systems described below:

(1) Cement Mortar Lining: Fittings furnished shall have a standard thickness cement mortar lining and be seal coated in accordance with ANSI/AWWA C-104/A21.4, latest revision. Fittings shall be listed NSF or by an approved certifying agency as conforming to all requirements of ANSI/NSF 61 and shall have an asphalt exterior coating which conforms to ANSI/AWWA C-110/A21.53.

(2) Fusion-bonded epoxy: Fittings shall be coated inside and out with a minimum 8 mils of fusion-bonded epoxy, and be in conformance with the requirements of ANSI/AWWA C-116/A21.16 and AWWA C-550, latest revisions. Fittings shall be listed by an approved certifying agency as conforming to all requirements of ANSI/NSF 61.

3. QUALITY CONTROL AND TESTING

a. Ductile iron mechanical joint offsets shall meet or exceed pressure, hydrostatic and all other tests set forth in ANSI/AWWA C-110/A21.10 (or C-153/A21.53), latest revision.

b. Submit in duplicate notarized certificates of conformance that all tests and inspections performed on ductile iron mechanical joint offsets as required by the ANSI/AWWA standards C-110/A21.10 (or C153/A21.53) have been satisfied.

c. When submitting for approval of ductile iron mechanical joint offsets not listed in Section 4, include manufacturer drawings and brochures that clearly indicate size, dimensions, weights, performance standards, etc. If this documentation is omitted, the ductile iron mechanical joint offsets may be rejected at the sole option of the City.

4. MANUFACTURER

Ductile iron mechanical joint offsets shall be manufactured by U.S. Pipe and Foundry Co., American Ductile Iron Pipe, Sigma, Tyler-Union, Union Foundry, or approved equal.

MECHANICAL JOINT BOLTS-AND-NUTS

1. GENERAL

All mechanical joint bolts and nuts shall be manufactured in accordance with ANSI/AWWA C-111/A21.11, latest revision, and shall also adhere to the following specification.

2. PRODUCT

a. All mechanical joint bolts shall be a Tee-head design with hexagonal nuts. Dimensions shall be in accordance with ANSI/AWWA C-111/A21.11.

b. All bolts and nuts shall be manufactured of high-strength, low alloy steel in conformance with ANSI/AWWA C-111/A21.11 and ASTM A242, latest revisions.

c. All bolts shall be designed for internal and external threads to conform to ANSI/ASME B1.1 and B1.2. Thread form shall conform to the standards and dimensions of the coarse-thread series Unified Coarse (UNC); external threads shall be made in compliance with Class 2A limits, and internal threads shall be made in compliance with Class 2B limits. The Contractor is advised that various HDPE MJ adapters may require longer than standard bolts to complete the installation.

3. QUALITY CONTROL AND TESTING

When submitting for approval of mechanical joint bolts and nuts not listed in Section 4, include manufacturer drawings and brochures that clearly indicate size, dimensions, weights, performance standards, etc. If this documentation is omitted, the mechanical joint bolts and nuts may be rejected at the sole option of the City.

4. MANUFACTURER

Mechanical joint bolts and nuts specified herein shall be domestically manufactured of Cor-Ten or approved equal by Birmingham Foundry, National Set Screw Corporation or approved equal.

SOLID SLEEVES
(Ductile Iron, Compact, MJ)

1. GENERAL

Solid sleeves shall be used to join two plain ends of pipe or repair a damaged pipe.

2. PRODUCT

a. Solid sleeve lengths shall be up to 24-inches. The solid sleeve shall be capable of having two

plain ends of pipe inserted into opposite ends of the sleeve. The sleeve is then to be sealed to the pipe by a mechanical joint at each end of the sleeve.

b. All sleeves shall be manufactured of ductile iron. Solid sleeves shall be manufactured in accordance with ANSI/AWWA Standard C-153/A21.53, latest revision. All sleeves shall be rated for a minimum working pressure of 350 psi.

c. All solid sleeve sealing ends shall be mechanical joints in accordance with ANSI/AWWA C-111/A21.11, latest revision. All joint accessories shall be furnished with the fittings. All bolts and nuts shall be made of high-strength, low-alloy steel such as "Corten", "Usalloy", or "Acipalloy". The gasket shall be for a standard Mechanical Joint, in accordance with ANSI/AWWA C-111/A21.11, latest revisions, and be made of EPDM rubber. The follower gland shall be manufactured from ductile iron at least ASTM A536, Grade 70-50-05 in accordance with ANSI/AWWA C-111/ A21.11, latest revision

d. All ductile iron compact solid sleeves shall be furnished with a standard thickness cement mortar lining and seal coating in accordance with AWWA Standard C-104, latest revision.

e. Fittings shall have an exterior, asphaltic coating which conforms to ANSI/AWWA C-153/A21.53.

3. QUALITY CONTROL AND TESTING

a. All solid sleeves shall meet or exceed all testing requirements of ANSI/AWWA C-153/A21.53.

b. When submitting for approval of solid sleeves not listed in Section 4, include manufacturer drawings and brochures that clearly indicate size, dimensions, weights, performance standards, etc. If this documentation is omitted, the solid sleeves may be rejected at the sole option of the City.

4. MANUFACTURER

a. All ductile iron mechanical joint solid sleeves shall be manufactured by U.S Pipe, Sigma, Tyler/Union, American Cast Iron Company, Clow, or approved equal.

DRY-BARREL FIRE HYDRANTS

1. GENERAL

All non-rising stem dry-barrel hydrants shall be manufactured in accordance with AWWA C-502, latest revision and these specifications.

2. PRODUCT

a. Hydrants shall have a 5¼-inch main valve opening. The main valve shall be of compression-

design and shall open against and closing with pressure. The hydrant shall comply with the requirements of Associates Factory Mutual Insurance Companies and have the "FM" symbol cast into the barrel. The hydrant shall be listed with Underwriter's Laboratories. Hydrants shall open by turning the operating nut counterclockwise.

b. The hydrant shall be provided with a breakable traffic feature designed so that the nozzle section of the hydrant can be rotated a full 360 degrees. Break couplings shall be made of cast iron, epoxy coated steel, or forged stainless steel. The lower barrel and shoe shall be made of ductile iron, manufactured in accordance with AWWA C-502, latest revision.

c. All hydrants shall have two 2½-inch bronze nozzles, 180 degrees apart, and one 4½-inch bronze nozzle. All nozzle centerlines shall be at the same elevation. Nozzle outlet threads to be National Standard fire hose coupling screw thread, as described in Appendix A of AWWA C-502. After being coated with an approved anti-seize compound as specified herein, hydrant nozzle shall thread or twist-lock into the hydrant nozzle section; a locking device secures the nozzle. Cast iron or ductile iron nozzle caps provided, with gaskets; nozzle cap nut configuration matches hydrant operating nut. Chains are not provided on nozzle caps.

d. Hydrant design shall be such that removal of the seat valve drain mechanism, internal rod and all working parts can be accomplished through the top of the hydrant without disturbing the ground-line joint or nozzle section. The shoe inlet shall be mechanical joint, in accordance with AWWA C-111, latest revision. The interior of the shoe and (and upper and lower valves plates, if utilized in design) shall be epoxy-coated in accordance with AWWA C550, latest revision. Accessory kits shall be provided with MJ bolts and nuts and gasket. Mechanical joint nuts and bolts to be manufactured of high-strength, low-alloy steel equal to or better than "Cor-Ten". Main valve gasket and mechanical joint (MJ) gasket made of EPDM.

e. All above-ground external bolts, studs, and nuts made of low-zinc bronze or stainless steel. Below-ground bolts, studs and nuts shall be made of high-strength, low-alloy steel as specified herein, or of stainless steel. When bolts are used at the break coupling, they shall not be frangible.

f. Unless the operating rod is made of stainless steel, the rod shall be sheathed where it passes through a double o-ring seal, sealing the operating threads from the water in the hydrant at all times when the valve is in the open or closed position. Another o-ring shall prevent water from passing between the operating shaft and the sheath. Downward travel of the operating rod and valve assembly shall be controlled by a travel stop device (located in the bonnet only), to prevent the bottom of the main valve from making contact with the epoxy coating of the shoe. Travel stop devices located on the bottom of the operating rod are not acceptable. Bronze operating nuts shall be fully covered with a cast iron or ductile iron weather shield and shall have at least one anti-friction thrust washer to reduce the operating torque when opening the hydrant. The hydrant’s bronze main valve seat ring shall thread into a bronze sub-seat or drain ring. The drain outlet for the hydrant shall be eliminated as part of the casting or machining process.

g. Hydrant operating threads shall be lubricated with anti-seize compound paste upon assembly. Approved anti-seize compounds are Bostik Never-Seez food-grade (888-603-8558), or Permatex part #82448 (food-grade anti-seize compound). (877-376-2839), or MobilGrease

FM102 (food-grade). Approval for other anti-seize compounds shall be requested in writing to the Tampa Water Department, accompanied with a Material Safety Data Sheet from the manufacturer of the compound for review. Anti-seize compound shall not contain any heavy metals.

h. When the hydrant is tested for head-loss as described in AWWA C502, Section 5, latest revision, the maximum head–loss shall not exceed 2.5 psi when flowing at 1000 gpm through the 4 ½-inch nozzle,.

i. Hydrant coatings shall be as specified in AWWA C502 Section 4.02. Additionally, above-ground exterior hydrant coatings shall be minimum 4 mil Dry Film Thickness white primer coating, compatible with Porter high-grade enamel final paint to be applied in the field.

j. If manufacturer uses locking keys to secure the lower barrel to the shoe, all locking keys to be fully coated with a Water Department approved anti-seize compound applied upon assembly

3. QUALITY CONTROL AND TESTING

a. The following shall be provided upon request of the Engineer:

1. Certified affidavit from an officer of the manufacturer that hydrant conforms to AWWA C502, latest revision, and these specifications.

2. Certified test results from an independent testing laboratory indicating that the hydrant conforms to Section 2.8 of this specification.

3. Certification of Underwriter's Laboratories listing.

4. Certification of compliance with Associates Factory Mutual Fire Insurance Companies specifications.

5. Two sets of engineering performance data, model catalog, and repair parts manual and price lists. Such data shall contain but is not necessarily limited to: head-loss versus flow curves, hydrant parts and materials, hydrant dimensions. Catalog and maintenance data shall also be supplied in sufficient detail to serve as a guide in the assembly and taking-down of the fire hydrant, the ordering of repair parts, and complete lubrication and maintenance information.

6 Failure to submit any of the above certifications or information with the bid package may result in rejection of the bid.

7. The Water Department may request samples of each hydrant. Samples shall be supplied by and, if requested, returned to the bidder at the bidder's expense. Failure to submit samples within 15 working days after the date of a written request shall result in rejection of the bid.

4. MANUFACTURER

a. Hydrants shall be assembled and tested in their entirety within the United States of America or its territories. The manufacturer of hydrants shall have continuously manufactured, catalogued, sold, and had in service the hydrants in the size proposed for a minimum of five years.

b. Hydrants shall be manufactured by American (Darling B-84-B 5¼), U.S. Pipe (Metro 250 M94, 5 ¼), Kennedy (Guardian K81-D, 5¼), or American AVK (Series 2780, Nostalgic, 5¼).

TAPPING SLEEVES
(Mechanical Joint)

1. GENERAL

Tapping sleeves (mechanical joint) shall be constructed of ductile iron. All tapping sleeves shall be suitable for tapping cast iron, ductile iron pipe, C-900 PVC pipe, and all pipe manufactured in accordance with ANSI A21 Standard, AWWA, and these specifications.

2. PRODUCT

a. Tapping sleeves shall be of the split sleeve design; one half shall contain the outlet hub, gasket, and tapping flange; the other shall form the back of the sleeve. A ¾" NPT test plug shall be provided on the outlet throat of the sleeve for pressure testing the sealed sleeve at 150 psi prior to tapping the pipe. All tapping sleeves shall allow a full-size cutting head to pass through the outlet of the hub.

b. Tapping sleeves shall be constructed of ductile iron and shall be manufactured in accordance with ASTM A536.

c. All bolts and nuts joining the two halves of the sleeve shall be high strength, low alloy steel, such as Cor-Ten, in accordance with AWWA C-111, latest revision.

d. Tapping sleeve connection flanges shall conform to AWWA C-110/ANSI B16.1 Class 125 with counter bore per MSS SP-60 dimensions.

e. Mechanical joint tapping sleeves shall form a mechanical joint at each end of the sleeve after bolting the halves together. The sleeve shall then be sealed to the pipe by assembling the mechanical joint using split gaskets and follower glands.

f. All ductile iron sleeves shall have an outside bituminous coating in accordance with AWWA C-110, latest revision.

g. End and side gaskets shall be made of EPDM rubber.

3. QUALITY CONTROL AND TESTING

When submitting for approval of tapping sleeves (mechanical joint) not listed in Section 4, of this specification include manufacturer drawings and brochures that clearly indicate size, dimensions, weights, performance standards, etc. If this documentation is omitted, the tapping sleeves (mechanical joint) may be rejected at the sole option of the City.

4. MANUFACTURER

Tapping sleeve (mechanical joint) shall be domestically assembled. Tapping sleeves (mechanical joint) shall be manufactured by U.S. Pipe Mechanical Joint Tapping Sleeve, Mueller Co. H-615, American Flow Control or approved equal.

TAPPING SLEEVES
(Steel, "O-Ring" Type)

1. GENERAL

Tapping sleeves (steel/"O-ring" type) shall be constructed of high strength steel and shall be manufactured in accordance with ASTM A285. Steel tapping sleeves shall be suitable for tapping ductile iron pipe, C-900 PVC pipe, and all pipe manufactured in accordance with ANSI A21 Standards, AWWA, and these specifications.

2. PRODUCT

a. All tapping sleeves (steel or "O-ring" type) shall be split sleeve design; one half shall contain the outlet hub, gasket and tapping flange; the other half shall form the back. A ¾" NPT test plug shall be provided on the outlet throat of the sleeve for pressure testing the sealed sleeve at 150 psi prior to tapping the pipe. All tapping sleeves shall allow a full-size cutting head to pass through the outlet of the hub.

b. All bolts and nuts joining the two halves of the sleeve shall be high strength, low alloy steel, such as Cor-Ten, in accordance with AWWA C-111, latest revision.

c. All tapping sleeve connection flanges shall be a Class 125 flanged joint, conforming to AWWA C207 Class D, ANSI 150 lb. with a counter bore per MSS SP-60 dimensions.

d. Tapping sleeves shall seal to the pipe by the use of a confined "O-ring" gasket around the tap opening between the sleeve and pipe or by a full circumferential gasket between the sleeve and pipe. Gasket shall be made of EPDM rubber.

e. All steel tapping sleeves shall be finished with fusion-bonded epoxy coating both inside and outside, in accordance with AWWA C-550, latest revisions.

3. QUALITY CONTROL AND TESTING

When submitting for approval tapping sleeves ("o-ring" type) not listed in Section 4, include manufacturer drawings and brochures that clearly indicate size, dimensions, weights, performance standards, etc, which completely substantiates the tapping sleeves compliance with this specification. If this documentation is omitted, the tapping sleeves may be rejected at the sole option of the City.

4. MANUFACTURER

Tapping sleeve (steel/"o-ring" type) manufactures shall be domestically assembled. Tapping sleeves (steel/"o-ring" type) shall be manufactured by JCM 412, Smith Blair 622, Ford Meter Box FTSC, Dresser 610, Mueller H615, U.S. Pipe T9, or approved equal.

LINE STOPS (4"-42")

1. GENERAL

Line stops shall be used to isolate sections of water mains in order to keep customers in service during water main tie-ins, water main repairs and to compensate for broken valves. The water mains shall remain under pressure during the installation and use.

Line stops shall be constructed of ductile iron or stainless steel (carbon steel is acceptable subject to Engineer approval). All line stop bodies shall be suitable for tapping cast iron, asbestos cement pipe (12" and smaller), ductile iron pipe, C-900 PVC pipe, and all pipe manufactured in accordance with ANSI A21 Standard, AWWA, and these specifications. Line stops on asbestos cement pipe, on pipe greater than 8" and on pipe with taps the same size shall be mechanical joint.

Line stops (steel/"O-ring" type) shall be constructed of high strength steel and shall be manufactured in accordance with ASTM A285. Line stops shall be suitable for tapping ductile iron pipe, C-900 PVC pipe, and all pipe manufactured in accordance with ANSI A21 Standards, AWWA, and these specifications.

2. PRODUCT

a. Line stop fitting shall be full encirclement, pressure retention type split tee. It shall consist of two segments – an upper flange saddle plate and a lower saddle plate. All bodies shall have a ¾" NPT test plug to verify all seals are secure prior to tapping. Cover plate gasket shall be EPDM. Completion plug o-ring shall be EPDM. Gasket shall be molded from elastomer compounds that resist compression setting and are compatible with water in the 32 to 120 deg. F temperature range.

b. Line stop sleeve shall have a full-circle rubber gasket and a flanged outlet for bolting to the line stop tapping valve. Sealing may be accomplished by either split end gaskets and mechanical joint ends or a single rubber gasket around the tap opening.

c. Nuts-and-bolts shall be stainless steel.

d. Outlet flange shall be ductile iron, stainless steel, or machined from a 150 lb. forged steel flange (ASTM A181 or A105) or from pressure vessel quality steel plate (ASTM A285, Grade C), be flat-faced and drilled per ANSI B16.5

3. QUALITY CONTROL

a. Catalogs and manufacturer data shall be provided as required by the Engineer. The catalogs and maintenance data shall contain sufficient detail to serve as a guide in the line stop installation and the ordering of repair parts.

b. The Water Department may request samples of proposed line stops. Samples shall be supplied and/or returned to the Contractor at the Contractor's expense.

c. Failure to submit samples within 10 calendar days after the date of a written request shall result in rejection of that item.

d. The sleeves shall be rated at150 psi hydrostatic with a test pressure of 200 psi. and maintain zero leakage at all times.

4. MANUFACTURER

Line stops shall be domestically assembled equivalent to or better than Advanced Valve Technologies EZ Valve II, Hydra-Stop, JCM 440 Line Stop, or approved equal.

TAPPING SADDLES

1. GENERAL

Tapping saddles shall be constructed of heavy gray cast iron, or ductile iron, with the attachment straps, nuts, and washers constructed of corrosion resistant alloy steel in accordance with AWWA C-111, latest revision.

2. PRODUCT

a. All tapping saddles shall be suitable for Class C & D gray cast iron, ductile cast iron pipe, and all pipe manufactured in accordance with ANSI A21 Standards.

b. Tapping saddles shall seal to the pipe by the use of a confined "O- ring" gasket, and shall be able to withstand a pressure of 150 psi with no leakage in accordance with AWWA C-110, latest revision. A ¾" NPT test plug shall be provided for pressure testing.

c. The outlet branch flange shall be Class 125 flange joint with a counter bore per MSS SP-60 dimensions.

d. Tapping saddles shall have outside bituminous coating in accordance with AWWA C-110, latest revision.

3. QUALITY CONTROL AND TESTING

When submitting for approval a tapping saddle not listed in Section 4, include manufacturer drawings and brochures that clearly indicate size, dimensions, weights, performance standards, etc. If this documentation is omitted, the tapping saddle may be rejected at the sole option of the City.

4. MANUFACTURER

Tapping saddles shall be manufactured by American Ductile Iron Pipe, U.S. Pipe, or approved equal.

BASE MATERIAL

1. GENERAL

All base material shall satisfy the requirements of the regulatory agency responsible for overseeing that portion of the right-of-way.

2. PRODUCT

a. Shell material shall satisfy all requirements of Section 913, Shell Material, of the Florida Department of Transportation Standard Specifications for Road and Bridge Construction, latest edition, except that testing requirements shall be in conformance with the requirements of the regulatory agency responsible for overseeing the roadway.

b. Limerock base shall satisfy all requirements of Section 911, Limerock Material for Base and Stabilized Base, of the Florida Department of Transportation Standard Specifications for Road and Bridge Construction latest edition, except that testing requirements shall be in conformance with the requirements of the regulatory agency responsible for overseeing the roadway.

c. Crushed concrete base shall satisfy all requirements of Section 204, Graded Aggregate Base, of the Florida Department of Transportation Standard Specifications for Road and Bridge Construction 2000 Edition, except that testing requirements shall be in conformance with the requirements of the regulatory agency responsible for overseeing the roadway.

d. Superpave Asphalt Base Courses shall satisfy all provisions of Section 234, Superpave Asphalt Base, of the Florida Department of Transportation Standard Specifications for Road and Bridge Construction latest edition, except that testing requirements shall be in conformance with the requirements of the regulatory agency responsible for overseeing the roadway.

e. Asphalt Base Courses shall satisfy all provisions of Section 280, Asphalt Base Courses, of the Florida Department of Transportation Standard Specifications for Road and Bridge Construction 2000 Edition, except that testing requirements shall be in conformance with the requirements of the regulatory agency responsible for overseeing the roadway.

3. QUALITY CONTROL AND TESTING

The Contractor will be responsible for providing copies of all initial materials tests to establish conformance to the contract documents. The City will be responsible for providing all initial field performance testing in accordance with the aforementioned specifications. The Contractor will be responsible for retesting of any failed sections.

TECHNICAL SPECIFICATIONS - WATER

T1.00 GENERAL REQUIREMENTS

T1.01 Summary of Work

The Contractor shall have access to and inspect the project area prior to beginning construction and ascertain existing conditions as per the Instructions to Bidders.

The work will include the furnishing of all services, labor, equipment and certain materials necessary for a complete installation of water lines and performed in a thorough and workmanlike manner, as outlined in Section G-1.02 of the General Provisions. All items implied, usually included, or required for the construction of a complete operating system shall be installed whether or not shown on the plans or specified herein. In general, pipe shall be provided with a minimum of 36 inches of cover.

The Contractor will preserve and protect all existing vegetation such as trees, shrubs and grass adjacent to the sites, as outlined in Sections G-9.02 and G-9.03 of the General Provisions, which do not reasonably interfere with the construction, as determined by the Engineer. It will be the Contractor's responsibility to give written notification, at least 2 days prior to commencement of construction, to any owners or occupants of properties along the construction route. This notification shall be about the pending construction, in order to allow the said owners or occupants an opportunity for removing from the work site any bushes, flowers, plantings, trees etc. they wish to save that are within the limits of construction. The Contractor will be responsible for all unauthorized cutting or damaging of trees and shrubs, including damage due to careless operation of equipment, stockpiling of materials or tracking of grass by equipment. The Contractor will be liable for, or will be required to replace or restore at no additional expense to the City, all vegetation not protected or preserved as required herein that may be damaged or destroyed.

City-owned utilities within project limits will include water, wastewater, drainage, and traffic signal cables. All other utilities present within City of Tampa rights-of-way are considered private utilities. Private utilities are responsible for locating their utilities prior to construction and, if required, relocating and/or temporarily supporting their utilities to allow the safe construction of the work under this contract. Private utilities must provide this service without charging a fee to the City’s Contractor.

City-owned utilities and structures not shown on Contract Drawings to be removed and replaced or relocated shall be protected in place and utility service shall be maintained. Where temporary conflicts occur between existing City-owned utilities and the new construction, the Contractor shall protect in place or relocate said utilities and maintain utility service all to the satisfaction of the City. Utilities and structures shown on the drawings to be removed and replaced or relocated by the Contractor shall conform to the requirements of the applicable technical specifications.

Record drawings for existing gravity sewer and laterals along the project route are often not complete. The Contractor shall be prepared to immediately repair any active sewer lateral connection damaged during construction. If the location of the active sewer lateral conflicts with the proposed location of the water main, the Contractor shall immediately notify the City, who will direct the Contractor on how to resolve the conflict. The Contractor may be required to reroute the sewer lateral either over or under the proposed water main.

T1.02 Coordination

The Contractor shall provide for the complete coordination of the construction effort including the work of subcontractors, the effort of independent testing agencies and the interrelated work with the City where tie-ins to existing facilities are required.

It shall be the Contractor's responsibility to alert the Engineer at least two working days in advance of construction, to any conflicts or potential conflicts with the proposed work. Failure of the Contractor to review the job site and alert the Engineer to any conflicts shall relieve the City from compensating the Contractor for any cost arising from any remedial action necessary to resolve the conflict with the proposed work.

All water lines, storm drains, sanitary sewers, gas or other pipe, telephone or power cables or conduits, all individual service connections and all other obstructions, whether or not shown on the plans, shall be supported where adjacent to or crossing the new utility line excavation in a manner acceptable to the Department and the respective utility owner. Wherever existing utility structures or branch connections leading to sanitary sewers or to storm drains, or other conduits, ducts, pipes, or structures present obstructions to the grade and alignment of the pipe, they shall be permanently supported, removed, relocated, or reconstructed by the Contractor through cooperation with the owner of the respective utility, structure, or obstruction involved. In those instances where their relocation or reconstruction is impractical, a deviation from line and grade will be authorized and the changes shall be made in the manner directed by the Engineer.

Approximate locations of known water, sanitary, drainage, power and telephone installations along the route of the new water mains or in the vicinity of new work are shown according to the best information available at the time of preparation of the drawings, but do not purport to be absolutely correct, and must be verified in the field by the Contractor. The Contractor shall obtain the location, elevations, and dimensions of all existing utilities, structures, and other features affecting his work prior to construction. At least 1,000 feet ahead of construction, the contractor shall obtain the elevations of all utilities crossing the proposed water main and, where the required separations cannot be achieved, shall notify the Engineer, in order that necessary changes may be made to permit installation of new pipe and actual locations be recorded for the City's record drawings.

In addition, careful coordination with the work of other contractors may be required if other work is underway within the project area.

Working adjacent to and crossing other utilities can be expected to be commonplace on this project. The Contractor, as outlined in Article G- 1.03 of the General Provisions, shall coordinate his construction schedule with the various utility companies as well as affected local agencies involved prior to starting the project along with a minimum of 48 hours of notice to when construction will commence in an area, in order to permit field location of utility lines prior to construction. A toll free number (811) is available to assist in such coordination efforts. This number is for the utility notification center, a program known as Sunshine State One Call of Florida, but may not totally represent all utilities involved in the construction area. The Contractor is responsible for contacting the utility notification center and to immediately notify the Contract Administration Department (635-3400) of the "Location Request Number" obtained.

The various agencies or utilities possibly affected by the work include but are not necessarily limited to the

following:

City of Tampa
Wastewater Department
306 E. Jackson St. (390A6N)
Tampa, FL 33602

Florida Dept. Transportation
2820 Leslie Rd
Tampa, FL 33619

DPW Traffic Transportation
306 E. Jackson St., (290A4E)
Tampa, FL 33602

Hillsborough County
Planning & Development Mgmt. Dept.
P.O. Box 1110
Tampa, FL 33601

Hillsborough County Right of Way Management office
5701 East Hillsborough Avenue
Suite 1222
Tampa, Florida 33610

All utilities shall be kept in operation except with the express written consent of the utility owner. It will be the Contractor's responsibility to preserve existing utilities. Any and all damage to existing utilities as a result of the Contractor's actions shall be repaired to the satisfaction of the utility owner and the City at the Contractor's expense.

Where connections are made to existing mains or other shutdowns are necessary, permission must be obtained and arrangements must be made with the Water Department for removing from service those mains that will be affected. Shutdowns must be held to a minimum in both number and duration, and accomplished at times acceptable to the Water Department. No valve or other control device on the existing system shall be operated by the Contractor except as detailed in the Specific Provisions, sections S-17.01 - Shutdowns. Additionally, any service meter that is temporarily removed, after being approved by the Water Department, shall be returned to the original service address from which it was removed.

T1.02A Maintenance of Continuous Water Service

Maintaining continuous water service means that water flows through a water main 24 hours a day seven days a week.

The intent of this project's Plans and Technical Special Provisions is for all water mains to be installed as a continuous project. Connections to existing water mains shall be done in a timely manner. At no time shall the flow of water running the length of the project be stopped except to reconnect to water mains that have been tested and cleared for potable water use.

Whenever the Department agrees to temporarily shut down a water main that has back-feed, the Contractor shall maintain water quality. To maintain water quality, the Contractor shall provide flushing hydrants at each dead-end and shall flush the main at three-day intervals as required to satisfy FDEP requirements. The water main shall be flushed for the duration required to remove two volumes of water from the dead end section. The Contractor shall obtain water samples as required to complete FDEP shutdown requirements. All costs for temporary cutting, required testing, and plugging water mains, and maintaining water quality shall be at the expense of the

Contractor with no additional cost to the City.

T1.02B Connections to Existing Systems

The Department requires that its customers be kept in service at all times. The Contractor must provide temporary service to customers whose service will be affected by a shutdown.

The Department will allow shut down of customer services only when requested in writing from the Contractor. If customers are impacted by the shutdown, then the request must include why temporary services cannot be provided to customers.

When a shutdown is authorized by the Department and customers will have their water shut off, the Contractor must have pre-assembled all new piping except at the point of the tie-in including service lines being transferred to the new main. The entire pre-assembly shall be successfully pressure tested and bacteriological tested prior to the shutdown. The Contractor shall have sufficient crews on site to accomplish the shutdown in less than four hours.

Listed below are the policies and procedures for scheduled service interruptions and emergency shutdowns to City water mains. The Contractor must provide two weeks advance notice in writing with a copy of the Atlas sheet where the water main is to be shutdown. If a shutdown cannot be performed as scheduled, then the Contractor must notify the Department five days in advance of the rescheduled shutdown so that the City can provide customers the full 72-hour advance notification of the shutdown.

To minimize the days customers are under boil water conditions, the Contractor shall provide required sampling immediately following placing the water main back in service. All samples must pass two consecutive days of sampling to be approved. In order to issue rescind boil water notices, the City must be notified immediately of passed sample results. Final testing results shall be kept in the job file and made available upon request to the Hillsborough County Health Department.

T1.02C Existing Water Main Condition

All water mains on this project are in working order. Removing pavement may compromise the structural integrity of the roadway. Use of heavy equipment in these areas could cause damage and/or leaks to the water mains. Excavating beneath these mains at their joints and disturbing these mains could cause leaks. Contractor shall be responsible for scheduling work such that the main is replaced prior to drainage and roadwork. Contractor is responsible for repairing damages to water mains once the pavement is exposed at no extra cost to the City.

T1.03 Field Engineering

Each element of the work is subject to review by the Engineer, prior to proceeding with the next element; however, this shall not relieve the Contractor of the responsibility for delivering to the City a project completed in conformance with the contract plans and specifications and guaranteed as stipulated.

T1.04 Abbreviations and Symbols

Various abbreviations and symbols may be used or referenced in these specifications and contract plans. Symbols are generally explained on the sheet of the plans entitled "Location Map, Legend and General Notes". Abbreviations commonly used, along with their full reference, are as follows:

- Cu.Yds. (CY) - Cubic Yards
- CIP - Cast Iron Pipe
- DIP - Ductile Iron Pipe
- DIPRA - Ductile Iron Pipe Research Association (formerly CIPRA)
- EA - Each
- ED - Each Day
- FDEP - Florida Department of Environmental Protection
- FDOT - Florida Department of Transportation
- FL - Flanged Joint
- HDD - Horizontal Directional Drilling
- HDPEP - High Density Polyethylene Pipe
- Lin. Ft. (LF) - Lineal Foot
- LS - Lump Sum
- mg/l - Milligrams per Liter
- MJ - Mechanical Joint
- MH - Man Hours
- NSF - National Science Foundation
- OSHA - Occupational Safety and Health Administration
- ppm - Parts per Million
- psi - Pounds per Square Inch
- PVCP - Polyvinyl Chloride Pipe
- RPR - Resident Project Representative
- S.P. - Steam Pressure
- Sq. Ft. (SF) - Square Feet
- Sq. Yds. (SY) - Square Yards
- TN - Ton
- W.O.G. - Water, Oil, Gas
- NAVD88 - North American Vertical Datum 1988

T1.05 Submittals, Shop Drawings, Product Data and Samples

The Contractor shall submit 4 copies of shop drawings as stated in Article G-3.02 of the General Provisions, plus those copies necessary for his own requirements in accordance with Section 3 of the General Provisions. The shop drawings shall have been checked and stamped approved by the Contractor and identified as the Engineer may require. This data shown in the shop drawings shall be complete with respect to dimensions, design criteria, materials of construction, and the like, to enable the Engineer to review the information required. The data shown on the shop drawings shall include, in addition to that specified in the General Provisions, reference to specification section, drawing number, item identification on catalog cuts and like information to expedite review. Incomplete submissions will be returned without action.

Items that are on the Water Department's pre-approved material list will not be required to go through the

shop drawing submittal process, provided that the list of materials is submitted to and approved by the Engineer in advance of the start of construction.

The Engineer will review and return one (1) set of the shop drawings along with those sets submitted by the Contractor over and above the quantity required by Article G-3.02 of the General Provisions. The returned sets shall bear the Engineer's comments and shall be returned with reasonable promptness. The Contractor's stamp of approval on any shop drawing shall constitute a representation to the Engineer that the Contractor has either determined and verified all field construction criteria, materials, catalog numbers and similar data or he assumes full responsibility for doing so, and that he has reviewed or coordinated each shop drawing with the requirements of the work, contract documents and technical specifications.

The Engineer's review of a shop drawing is only for general conformance with the design concept of the project, and shall not relieve the Contractor from his responsibility for and deviation from the requirements of the contract documents or technical specifications, unless the Contractor has, in writing, called the Engineer's attention to such deviation at the time of the shop drawing submission and the Engineer has given written approval to the specific deviation. Any review by the Engineer shall not relieve the Contractor from his responsibility for errors or omissions in the shop drawings.

One complete set of reviewed shop drawings, product data and samples shall be kept at the site at all times. During the work specified as shown on the shop drawings, the Contractor shall make no deviations from the reviewed drawings, and the changes made thereon by the Engineer, if any.

When required by the Engineer, shop drawings or product data shall be submitted for, but shall not be necessarily limited to, the following:

- Ductile iron pipe and fittings, including restrained joint type,
- Gate valves,
- Tapping valves and sleeves,
- Fire Hydrants,
- Concrete mix design, reinforcing steel and pre-cast items, if used.
- Line Stops and/or Insertion Valves

Whenever a standard of quality is established by a reference specification, the Contractor shall submit a certificate by the manufacturer that the material supplied meets the requirements of both these technical specifications and the referenced specifications and standards.

T1.07 Materials and Equipment

A) General

Materials and equipment incorporated into the work shall meet the requirements of Section 4 of the General Provisions and these specifications. The Contractor shall furnish satisfactory evidence of the quality and kind of materials and equipment as well as guarantees or warranties provided by the manufacturer. It will be necessary to submit a copy of all delivery tickets for materials used on the project, regardless of the basis of payment.

Materials, supplies or equipment to be incorporated into the work shall not be purchased by the Contractor or subcontractors subject to a chattel mortgage or under a conditional sale contract or other agreement by which an interest is retained by the seller.

All materials and equipment shall be applied, installed, connected, erected, used, cleaned, finished and conditioned in accordance with the instructions of the applicable manufacturer, fabricator or processor except as otherwise provided in the Contract Documents. At the time that any piece of equipment is placed in service or operation at the construction site, the Contractor shall arrange for a qualified representative of the manufacturer to be present for the purpose of inspecting, approving and adjusting the equipment installation. He shall remain on the job to instruct the City's personnel in proper operation and maintenance and shall remain until the equipment is operating in a satisfactory manner.

B) Quality Standards

If a standard of quality for items of equipment is established by reference on the plans or in the specifications to specific manufacturer's products, materials or construction and/or fabrication, items of equipment shall equal or exceed the standard of the referenced product as outlined in Section G-4.05 of the General Provisions.

The Engineer shall be the sole judge of material or equipment equality. The burden of proof of equality rests with the Contractor. Qualities described and shown refer to minimum criteria the Engineer will use in considering equipment proposed for the project.

It is not the intent of the Contract Documents to function as proprietary specifications. Where a particular manufacturer make and model are cited and specifically required for interchangeability of parts and to match existing equipment, this has been stated in the specifications.

C) Transportation and Handling

Materials and equipment shall be loaded and unloaded by methods affording adequate protection against damage. Every precaution shall be taken to prevent injury to the material or equipment during transportation and handling. Suitable power equipment will be used and the material or equipment shall be under control at all times. Under no condition shall the material or equipment be dropped, bumped or dragged. When a crane is used, a suitable lift sling shall be used.

The crane shall be placed so that all lifting is done in a vertical plane. Materials or equipment skid loaded, palletized or handled on skidways shall not be skidded or rolled against material or equipment already unloaded.

Materials and equipment shall be delivered to the job site by means that will adequately support it and not subject it to undue stresses. Material and equipment damaged or injured in the process of transportation, unloading or handling shall be rejected and immediately removed from the site. They shall be replaced with materials that meet all requirements of the contract documents and are suitable to the Engineer.

D) Storage and Protection

Materials and equipment shall be stored in a manner and at a location acceptable to the Engineer to insure the preservation of their quality and fitness for the work and which precludes damage or injury and affords protection against weather staining, corrosion or vandalism. Skidded or palletized materials or equipment shall not be stacked. Electrical equipment shall be stored indoors or under cover. Sheet materials shall be stored in a manner that affords free drainage with no ponding of water. All equipment shall be stored in a secure area.

Replacement of materials or equipment damaged, destroyed or lost through improper, inadequate or careless storage shall be the Contractor's responsibility.

Stored materials and equipment shall be readily and easily accessible to facilitate inspection.

T1.08 Cleaning and Restoring

All damaged areas shall be repaired, and all excess earth and rubble removed. Any and all existing facilities and/or conditions shall be restored to original condition or better.

T2.00 CONSTRUCTION OF WATER MAINS AND APPURTENANCES

T2.01 Subsurface Investigation

The Contractor shall be responsible for having determined to his satisfaction, the nature and location of the work, and the ground conformation, the character and quality of the substrata, the types and quantity of materials to be encountered, the nature of the groundwater conditions, the character of equipment and facilities needed preliminary to and during the prosecution of the work, the general and local conditions and all other matters which can, in any way affect the work under this Agreement. The prices established for the work to be done will reflect all costs pertaining to that work.

The Contractor will notify the Engineer promptly in writing of any subsurface or adverse physical conditions at the site which differ materially from those that may be indicated by the Contract Documents. in the Instructions to Bidders and Section G-2.04 of the General Provisions. The Engineer will promptly investigate the conditions and advise the Contractor in writing if further surveys or subsurface tests are necessary. If necessary, the Department will promptly obtain the necessary additional surveys and tests and furnish copies to the Contractor.

T2.02 Site Preparation

A) General

The construction site shall be cleared of all obstructions, stumps roots, and vegetation within the limits required for proper execution of the work in accordance with Section 110, FDOT Standard Specifications, latest edition, to a minimum depth of 12 inches.

Shrubbery, trees and plants shall be protected as required by the City of Tampa Parks Department ("Parks Department") or the agency having jurisdiction, as shown on the plans, or as directed by the Engineer. Where necessary to remove plantings in order to accomplish the work, such plantings shall be replaced. Trees will be transplanted when feasible, and when a successful transplant is probable.

Plantings and trees shall be replaced before the work is accepted.

Foliage, trunks, and roots of trees to remain shall be barricaded by encircling with stakes and flagging at a distance equal to the branch spread or as required by the Parks Department. Stockpiling of materials and movement of equipment shall be avoided within this area. Interfering branches shall be removed without injury to trunks.

Trees, stumps, and large roots within the construction area shall be removed, unless otherwise directed. Topsoil shall be stockpiled for future use. Unsuitable materials shall be removed from the site and properly disposed of by the Contractor. All trees shall be preserved in their natural state unless their removal is directed by the Department. Trees within 20 feet of the construction line shall be protected as indicated on the plans or as directed by the Engineer. Trees with trunk diameters in excess of five inches (measured circumference three feet above ground level and divided by 3.14) shall be preserved unless:

A. their removal is directed;
B. they are located within areas scheduled to be paved; or
C. they interfere with utility or pipe trench alignment.

All trenching performed adjacent to tree trunks shall be accomplished in such a manner as to maintain a minimum clearance of at least 10 feet between the pipe and the base of the tree trunks for trees 5 inches in diameter and larger. A minimum of 20 feet clearance shall be maintained for tree trunks classified a grand tree by the Parks Department. When trenching is to be performed closer than the above minimums, root pruning or other protective measures as directed by the Engineer may be required. Tree trimming and root pruning shall be performed by a competent tree specialist who carries proper insurance and is licensed by the City of Tampa.

T2.03 Dewatering

If subsurface water is encountered in trenching or structural excavation work, the Contractor shall adequately dewater the excavation at his expense. No additional payment shall be made for dewatering operations.

The contractor will be required to do any and all sampling that may be required to be in conformance with the NPDES discharge permit requirements, at no expense to the city.

Subsurface water shall be kept 2 feet or more below the working area until there is no danger of displacement of pipes or structures. All water collected and pumped shall be disposed of in a manner which will cause no health hazard, flooding or nuisance to the surrounding area and in a manner so as not to degrade the water quality of surrounding water or violate any environmental ordinances or requirements. Water containing debris, sand or heavy sediment shall not be discharged into the storm water system. All permits for the discharge of this water shall be obtained by the Contractor from the appropriate regulatory agency.

T2.04 Trenching, Backfilling and Compacting

Trenching shall be conducted to the limits and grades shown on the plans or as directed by the

Department.

The Contractor performing trench excavation on this Contract shall comply with the Occupational Safety and Health Administration's (OSHA) trench excavation safety standards, 29 C.F.R., s.1926.650, Subpart P, including all subsequent revisions or updates to these standards as adopted by the Department of Labor and Employment Security (DLES) as well as The Florida Trench Safety Act as delineated in Florida Statute Chapter 553, Part III.

By submission of his bid and subsequent execution of this Contract, the Contractor certifies that all trench excavation done within his control shall be accomplished in strict adherence with OSHA trench safety standards, including all revisions and updates to these standards as adopted by the Department of Labor and Employment Security, as well as to The Florida Trench Safety Act as delineated in Florida Statute Chapter 553, Part III.

The Contractor also agrees that he has obtained or will obtain identical certification from his proposed subcontractors that will perform trench excavation prior to award of the subcontracts and that he will retain such certifications in his files for a period of not less than three years following final acceptance.

The Contractor shall consider all available geotechnical information in his design of the trench excavation safety system.

Dewatering operations shall be maintained until pipe laying is complete and the trench backfilled sufficiently to prevent movement or flotation of the pipe.

The use of trench-digging machinery will be permitted except in places where its operation will cause damage to other utilities, trees, buildings, or existing structures above or below ground; in which case hand methods will be employed.

The trench width and trenching method may vary with, and depend upon the depth of the trench and the nature of the excavated material encountered; but in any case shall be of ample width to permit the pipe to be laid and jointed properly and the backfill to be placed and compacted properly. The minimum width of unsheeted trench, at the bottom where the pipe is to be laid, shall be one foot greater than the nominal diameter of the pipe, except by consent of the Department. The maximum clear width of trench and the trench support system shall be in accordance with OSHA requirements.

Where sheeting and bracing are used, the trench width shall be increased accordingly. Trench sheeting shall be cut off at a level of at least 1 foot above the top of the installed pipe and shall be left in place until the pipe has been laid, tested for defects, repaired if necessary, and until the earth around the pipe has been compacted to a depth of 2 feet over the top of pipe.

Unless otherwise specified, the trench shall be AWWA C600 Type 2 as shown on the Standard Details "Typical Trench, Bedding and Backfill Detail". The trench shall have a flat bottom conforming to the depth to which the pipe is to be laid. The pipe shall be laid upon sound soil, cut true and even, so that the barrel of the pipe will have equal bearing for its full length. Bell depressions of ample dimensions shall be dug at each joint to permit proper pipe jointing.

In the event the Contractor excavates below the elevation required without approval from the Department, he shall refill with approved material and thoroughly consolidate. If, in the opinion of the

Engineer, the trench bottom cannot support the pipe, a further depth and/or width shall be excavated and refilled to pipe foundation grade or other approved means shall be adopted to assure a firm foundation for the pipe.

All excavated material shall be piled in a manner that will not endanger the work and that will avoid obstructing sidewalks and driveways. Gutters shall be kept clear or other satisfactory provisions made for street drainage. All material removed from the trench on an improved area shall be removed from the site by the Contractor at the Contractor's expense.

Material removed from an unimproved area may be reused if, in the opinion of the Engineer, it is suitable and if local conditions permit reuse. All materials suitable for reuse must be stored separate from the general excavated material. All backfill material must be approved by Engineer prior to placement. If replacement backfill is required, the Contractor must supply the material at his expense.

Backfill material shall be free from cinders, ashes, refuse, organic matter, boulders, rocks or stones, or other material that in the opinion of the Engineer is unsuitable. Rocks up to 6-inches in their greatest dimension may be used for backfill from 1 foot above the top of the pipe up to the subgrade of the pavement unless otherwise specified by the Engineer.

All trenches shall be backfilled by hand, from the bottom of the trench to the centerline of the pipe in layers of 6 inches. Compaction shall be performed by tamping. Backfill material shall be deposited in the trench for the full width on each side of the pipe. From the centerline of the pipe to the specified grade, the pipe shall be backfilled by hand or by approved mechanical methods.

Compaction and consolidation shall be done in accordance with the requirements of the agency having jurisdiction. Unless requirements of the agency having jurisdiction are more stringent, all compaction shall conform to the following:

A. Impervious (paved) Surface Areas

The space between the pipe and the trench sides shall be packed full by hand-shoveled earth, free from lumps, carefully deposited in layers not exceeding 6-inches in depth. Such material shall be placed equally on each side of the pipe, and at the same time tamped in a manner acceptable to the Department, until enough fill has been so placed and compacted to the centerline of the pipe. From this point to 12 inches above the pipe, backfill shall be placed and compacted in uniform loose lifts no greater than 6 inches to a density that is at least 98% of the maximum modified proctor density (as determined by the Modified Proctor Density Test Method (ASTM D-1557)). The balance of the soils backfilled from this point to the top of the trench shall be placed and compacted in loose lifts not to exceed 12 inches to a density at least 98% of the maximum modified proctor density.

B. Pervious (non-paved) Surface Areas

The space between the pipe and the trench sides shall be packed full by hand-shoveled earth, free from lumps, carefully deposited in layers not exceeding 6-inches in depth. Such material shall be placed equally on each side of the pipe, and at the same time tamped in a manner acceptable to the Department, until fill has been placed and compacted from the bottom of the trench to the centerline of the pipe. From this point up to grade, backfilled soils shall be placed and compacted in uniform loose lifts no greater than 12 inches, to a density that is at least 95% of the maximum density as

determined by the Modified Proctor Density Test (ASTM D-1557).

T2.05 Pipeline Installation

A) General

During shipping, delivery and installation of pipe and accessories, materials shall be handled in such a manner as to prevent any damage. Particular care shall be taken not to injure pipe coatings. All pipe, fittings, valves and other material shall be subject to inspection and acceptance by the Department after delivery and no broken, cracked, misshapen, imperfectly coated, or otherwise damaged or unsatisfactory material shall be used. When a defect is discovered, the damaged portion shall not be installed. With the Department's approval, cracked pipe shall have the defect cut off at least 12 inches from the break in the sound section of the barrel.

Installations shall be according to AWWA Standard C600 (ductile iron pipe), AWWA C605 (PVCP pipe), AWWA C906 (PE pipe), AWWA Manual of Water Supply Practices M55 (PE Pipe Design and Installation), ASTM F2164-02 (Field Leak Testing of PE Pipe), pipe manufacturer's recommendations, and as described in these technical specifications. Disinfection of all water mains shall be in accordance with AWWA C651.

All connections to existing piping systems shall be made as shown or indicated on the plans after consultation and cooperation with the Department. No such connection shall be made until all requirements of these specifications as to tests, cleaning, flushing and disinfection of new work have been met, and the planned cut-in to the existing line has been approved by the Department. Where connections are made between new work and existing work, the connections shall be made in a thorough and workmanlike manner using proper fittings and specials. Some such connections may have to be made during off-peak hours if required by the Department.

B) Underground Pipelines

Proper implements, tools and facilities satisfactory to the Department shall be provided and used. Pipe, fittings, valves and appurtenances shall be carefully lowered into the trench piece by piece. Under no circumstances shall piping materials be dropped or dumped into the trench. Pipe and fittings shall be carefully examined for cracks and other defects while suspended above the trench immediately before installation in final position. If damage occurs to any pipe, fitting, valve or piping accessory in handling, the damage shall be immediately brought to the Engineer's attention. The Engineer shall prescribe corrective repairs or rejection of the damaged items.

Lumps, blisters and excess coating shall be removed from the bell- and-spigot end of each pipe. The outside of the spigot and the inside of the bell shall be wire brushed and wiped clean, dry and free from oil and grease before the pipe is laid. Pipe joints shall be made up in accordance with manufacturer's recommendations.

For DIP and PVCP, upon satisfactory excavation of the pipe trench and completion of the pipe bedding, a continuous trough for the pipe barrel and recesses for the pipe bells, or couplings, shall be excavated by hand digging. When the pipe is laid in the prepared trench, true to line and grade, the pipe barrel shall receive continuous, uniform support and no pressure will be exerted on the pipe joints from the trench

bottom. All ductile iron pipe shall be wrapped in polyethylene encasement (polywrapped) as shown in the Standard Detail. The polywrap and tape shall be blue for potable water and green for sanitary sewer force mains.

Pipe manufactured from materials, which are classed as flexible for purpose of pipe design shall be bedded true to line and grade with uniform and continuous support from a firm base and installed in accordance with manufacturer's recommendations. Blocking shall not be used to bring the pipe to grade. Backfill material shall be properly placed and compacted to provide lateral restraint against deflection in the pipe diameter. Care shall be exercised to avoid contact between the pipe and compaction equipment.

Pipe interior surfaces shall be thoroughly cleaned of all foreign matter before being gently lowered into the trench and shall be kept clean during laying operations by means of plugs or other approved methods. Pipe 12-inches in diameter and smaller may be cleaned by flushing in place under the supervision of the Engineer if in the Engineer's opinion the pipe contains dirt that can be so removed; if not, then the pipe shall be cleaned by swabbing and flushing before it is placed in the trench. All pipe 12-inches in diameter and larger shall be thoroughly cleaned, by appropriate means, before placing it in the trench. During suspension of work for any reason at any time, including the end of each workday, a watertight plug shall be placed in the end of the pipe last laid to prevent mud or other foreign material from entering the pipe. Sufficient backfill material shall also be placed over the pipe to prevent flotation. Lines shall be laid straight and depth of cover shall be maintained uniformly with respect to finished grade, whether grading is completed or proposed at time of pipe installation. Pipelines shown on the plans to be laid at grade or with a specified slope shall be installed with the invert conforming to the required elevations, slopes and alignment shown and with the pipe bottom uniformly and continuously supported by a firm bedding and foundation. Pipe installed using horizontal directional drill will be installed within the tolerance outline herein.

The work shall at all time progress with caution so as to prevent damage to underground obstructions, both known and unknown. Should an obstruction not shown on the plans be encountered, the Engineer shall be immediately notified so that alteration to the plans can be made should realignment be necessary. The Contractor shall notify the Engineer far enough in advance to allow the realignment to be accomplished by deflection in the pipe joints or adjustment in the drilling operation.

Ductile iron pipe and PVC pipe shall be laid with bell ends facing in the direction of pipe-laying (upstream) unless directed otherwise by the Department. Only EPDM gaskets will be used for PVC pipe and ductile iron pipe. Wherever it is necessary to deflect pipe from a straight line, either in the vertical or horizontal plane, the amount of deflection allowed shall not exceed 80% of that allowed under AWWA Standard C 600 (DIP) for the type of joint being installed and in accordance with the manufacturer's recommendations. Only after the pipe has been properly homed will it be allowed to be deflected. No deflection will be allowed in PVC pipe joints – however, longitudinal bending of PVC pressure pipe in conformance with AWWA C605 will be allowed.

Water mains crossing or parallel to storm sewer, sanitary sewer and gas mains shall have a minimum of 12 inches vertical clearance and a horizontal clearance which shall comply with all State, Local and Federal regulations and requirements. A minimum 3-foot pipe wall to pipe wall clearance shall be maintained between all utilities and water main. Any exceptions to these standards must be approved in advance by the Engineer. When crossing or parallel to storm sewer and sanitary sewer mains, including gravity sewers and force mains, with less than the minimum clearances, the Contractor shall protect the water main as

shown on the plans or, in a manner acceptable to the Engineer. Where ductile iron or PVC pipe water mains are crossing sewer service laterals with less than the require 12 inch minimum clearance, the Contractor shall make the necessary adjustments to center a full joint of water main (18' min.) at the conflict point, or replace 10 feet of the lateral with PVC pipe meeting AWWA C-900 Class 150 centered over the conflict point. Sewer laterals, when replaced, shall be installed in accordance with the City of Tampa Department of Sanitary Sewers technical manual, latest edition.

1. Thrust Restraint

All plugs, caps, hydrants, tees, bends and other fittings on pressure pipelines shall be provided with restrained joints as indicated on the plans, or as directed by the Engineer. Thrust blocks or reaction blocks may only be used when approved in advance by the Engineer.

2. Joints

The joints of all pipelines shall be made absolutely tight. The particular joint used shall be acceptable to the Department prior to installation. The gasket material for all joints shall be EPDM and shall be properly positioned before the pipe is lowered into the trench. The joining of the pipe shall proceed in accordance with the manufacturer's requirements. When required, push-on pipe joints shall be restrained as indicated on the plans, or as directed by the Engineer, with gripper-type restraint gaskets. Exterior metal restraint devices shall not be used to restrain pipe joints.

a) Push-on Joints

In making up the push-on type joint, the EPDM gasket shall be placed in the socket with the large round end entering first so that the groove fits over the bend in the seat. A thin film of lubricant (approved by the manufacturer) shall then be applied to the inside surface of the gasket that will come in contact with the entering pipe. The plain end of the pipe to be entered shall be thoroughly brushed with a wire brush and placed in alignment with the bell of the pipe to which it is to be joined. The joint shall be made up by exerting sufficient force on entering pipe so that its plain end is moved past the gasket until it seats as per manufacturer's recommendations. Backhoe buckets or excavation equipment shall not be applied directly to the pipe.

b) Mechanical Joints

Where shown on the plans, or where in the opinion of the Department, settlement or vibration is likely to occur, all pipe joints of pressure pipelines shall be bolted mechanical type as specified herein.

Mechanical joints shall be made up using high-strength, low- alloy steel bolts and rubber gaskets having either plain or duck tip as recommended by the manufacturer. All types of mechanical joint pipes shall be laid and jointed in full conformance with the manufacturer's recommendations. Only especially skilled workmen shall be permitted to make up mechanical joints.

Mechanical joints shall be centered in the bells. Soapy water shall be brushed over the gasket just prior to installation. The EPDM gasket and gland shall be placed in position, the bolts inserted, and the nuts tightened finger tight. Mechanical joints shall be assembled in accordance with AWWA Standards. The joints shall be tightened on opposite sides of the pipes by means of a torque wrench in such a manner that

the gland shall be brought up evenly into the joint. The following range of bolt torques shall be applied:

Bolt Size (Inches)	Range of Torque
3/4" diameter	85 to 95 ft.-lbs.
1" diameter	95 to 100 ft.-lbs.

If effective sealing is not obtained at a maximum torque listed above, the joint shall be disassembled and reassembled after thorough cleaning. If the joint is defective, it shall be cut out and entirely replaced or if the Department gives permission, it may be repaired by a suitable clamp.

3. Plugs and Caps

Plugs shall be inserted into the bell ends of all open ductile iron pipe, tees or crosses. All plain ends of pipe and fittings shall be capped.

4. Completion

After the pipe (DIP or PVC) has been installed, inspected by the Engineer and found to be satisfactory, sufficient backfill shall be placed along the exposed areas of pipe to hold it securely in place while conducting the preliminary hydrostatic test. No backfill shall be placed over the ductile iron pipe joints until the preliminary test is satisfactorily completed, leaving them exposed to view for the detection of visible leaks.

Upon satisfactory completion of the preliminary hydrostatic test, backfilling shall be completed.

T2.06 Fittings

Fittings shall be handled with care to avoid damage. All fittings shall be loaded and unloaded by lifting, and under no circumstances shall fittings be dropped, skidded, or rolled. Fittings shall not, under any circumstances, be placed against pipe or other fittings in such a manner that damage could result. Slings, hooks, or tongs used for lifting shall be padded in such a manner as to prevent damage or exterior surface or interior lining of fittings. If any part of the fittings' coating or lining is damaged by the Contractor, the repair or replacement shall be made by the Contractor in a manner satisfactory to the Engineer before installing. Fittings shall also be stored at all times in a safe manner to prevent damage and kept free of dirt, mud, or other foreign matter. All fitting gaskets shall be stored and placed in a cool location out of direct sunlight and out of contact with petroleum products. All gaskets shall be used on a first-in, first-out basis. Adequate precautions shall be taken to prevent the separation of joints at bends, tees, and plugged ends.

Details of design, construction, applications, installations, and number of joints necessary for the restraint of a given thrust shall be as specified herein, as shown on the Standard Details or as indicated on the plans. Under no circumstances shall gray iron pipe be used at restrained joints. Ductile iron pipe will be used unless otherwise specified by the Department.

Where reaction or thrust blocking is required, it shall be of concrete meeting the following design criteria:

- Compressive Strength - 3,000 PSI
  90% after 7 days

110% after 28 days

- % Air Entrainment - 5.0%
- Water/Cement Ratio - 265 lb Water/1 CY Concrete
- Maximum Aggregate Size - 1½"
- Slump - 3" - 4"

Blocking shall be placed between undisturbed earth and the fitting to be anchored where firm support can be obtained. The area of bearing on the pipe and on the ground in each instance shall be that shown on the plans, the Standard Detail or as directed by the Engineer. The fittings shall be polyethylene encased in a manner acceptable to the Engineer prior to blocking. The blocking shall, unless otherwise shown or directed, be so placed that the pipe and fitting joints will be accessible for repair. If the soil does not provide firm support, then suitable tie rods, bridles, clamps and accessories as specified by the pipe manufacturer to brace the fitting properly shall be provided.

Pre-cast thrust blocks may be used in lieu of poured-in-place blocks on 8 inch and smaller ductile iron water mains only. This type of block must be manufactured in accordance with these Technical Specifications. Size and bearing area of blocks will be as shown in the standard details or as determined by the Department. The Department has the authority to reject any damaged block or any block considered to be of questionable quality. Placement will be in accordance with standard procedures for restraining thrust. Earth behind such blocks will be either undisturbed or compacted to a minimum of 95% (Modified Proctor) density.

Tie rods and pipe clamps when allowed by the Department must be of adequate strength to prevent movement or other suitable means may be used as allowed by the Department. Steel rods, clamps, and washers shall be rustproof treated with bituminous material and polyethylene encased.

T2.07 Valves

Valves shall be handled with care to avoid damage. All valves shall be loaded and unloaded by lifting, and under no circumstances shall valves be dropped, skidded, or rolled. Valves shall not be placed, under any circumstances, against pipe, other valves or other fittings in such a manner that damage could result. Slings, hooks, or tongs used for lifting shall be padded in such a manner as to prevent damage. If any part of the valves' coating and lining is damaged by the Contractor, the repair and replacement shall be made by the Contractor at his expense in manner satisfactory to the Engineer before installing. Valves shall also be stored at all times in a safe manner to prevent damage and kept free of dirt, mud, or other foreign matter. All valve gaskets shall be stored and placed in a cool location out of direct sunlight and out of contact with petroleum products. All gaskets shall be used on a first-in, first-out basis.

Valves shall be set and joined to new pipe in a manner heretofore specified for cleaning, laying, and joining pipe. Valves shall be installed such that the operating nut is plumb, and its top is no more than 48-inches from finish grade at the valve. Valves shall be furnished with extension stems if operating nut is greater than 48-inches deep, such that the top of nut is no more than 24-inches from of the top of the valve box (see Detail 3.05). Connection to the valve shall be with a wrench nut coupling and a set screw(s) to secure the coupling to the valve’s operating nut. The coupling and square nut wrench shall be welded to the extension stem. Rock guard and centering plate are required. Extension stems shall be equal to or better than ProSelect Gate Valve Extension – with Centering Plate, or Trumbull Gate Valve Extension Stems, Style B.

Cast iron valve boxes shall be firmly supported and maintained centered and plumb over the operating nut of the valve by the Contractor with box cover flush with the surface of the finished pavement or at such other levels as may be directed. Valve boxes shall have 6-inch thick wire mesh reinforced concrete pads poured around the top section of the valve box when in pavement or when directed by the Department. The pad shall be 24 inches square and shall be centered on the valve box. All Department valve covers shall be painted safety blue as prescribed by the American Public Works Association (APWA) uniform color code for utility systems.

The valve and valve box shall be installed so Department personnel can insert a valve key through the valve box and completely open and close the valve. This test will be accomplished before final acceptance of the valve and box into the water system.

T2.08 Taps, Valve Insertions and Linestops

All material supplied shall be disinfected in accordance with Department standards.

After the tapping sleeve and valve have been installed and before the tap is made, the sleeve shall be tested to ensure a watertight joint. A test plug shall be provided in the sleeve and after the sleeve has been installed, it will be filled with water and the pressure increased to between 150 psi and 190 psi. All leaking joints shall be repaired to the satisfaction of the Engineer at the Contractor's expense.

All tapping sleeves shall be wrapped and sealed with polyethylene encasement material in a manner acceptable to the Engineer.

The contractor shall thoroughly clean the pipe surface, check the size and range of the sleeve to verify correct size of the product. Check the pipe surface to make sure it is free of flaws gouges and extreme irregularities. Pipe and face of gasket shall be lubricated with soap and water or gasket lubricating solution. Do not use grease or pipe lubricant.

Position half of body on pipe making sure the outlet is aligned with the branch line to be connected. Never position so that rotation is required. Position back-half of the body and install bolts. Tighten outside bolts first, working toward the center. Tighten bolts evenly alternating from one side of the sleeve to the other. Tighten bolts to the manufacturer required torque levels.

Check the inside of the sleeve and neck to make certain the gasket is properly sealed and not protruding where tapping cutter may damage it. Test assembly seals using test plug provided on sleeve. Once all seals are tight and test is complete, re-check bolt torques and proceed with tapping, valve insertion or linestop.

Install tapping valve per AWWA M-44. Provide for proper valve and pipe trenching, support, restraint and burial per the specifications herein.

T2.09 Hydrants

Fire hydrants (hydrants) shall be handled so as to avoid any damage at all times. Hydrants shall be located

in a manner to provide complete accessibility and in such a manner that the possibility of damage from vehicles or injury to pedestrians will be minimized. Fire hydrants in FDOT rights-of-way shall conform to FDOT clear zone requirements. Unless otherwise directed, the setting of any hydrant shall be as described in these Technical Specifications, and as shown in The City of Tampa Water Details 4.01 and 4.02 which can be found on-line.

Fire hydrants shall be thoroughly cleaned of dirt or foreign material before installation. All hydrants shall stand plumb and shall have their pumper nozzle perpendicular to the curb. The hydrant's bottom flange elevation shall be finished-grade plus 3- to 5-inches, and standard depth-of-bury shall be 3- to 5-feet. The Contractor will not be allowed to install hydrant extension kits (or vertical offsets of the hydrant lead) to accomplish required bottom flange elevations…hydrant(s) provided shall be with the appropriate length of riser pipe(s) to achieve elevation(s) and depth-of-bury required for installation in accordance with Water Detail 4.01 which can be found on-line.

Each hydrant shall be connected to the water main with a 6-inch branch controlled by an independent 6-inch resilient seat gate valve hydrant shut-off valve. Per the Florida Fire Prevention Code, NFPA 1:18.3.4.1, clearances of seven and one-half feet in front of and to the sides of the fire hydrant are required, and four feet clearance required to the rear of the hydrant.

All fire hydrant leads shall be made of ductile iron pipe. All fire hydrant tees shall be made of ductile iron.

All hydrants shall be anchored by restrained fittings as specified in these Technical Specifications and as shown in the Standard Details.

All fire hydrants shall be painted with a high-grade enamel, Federal Safety Yellow (OSHA approved), above the ground line.

All hydrant sets shall include the installation of a concrete thrust collar around the barrel of the hydrant 8 inches below the ground line.

Upon completion of installation and passing all required tests, the Contractor shall paint the bonnet of the hydrant OSHA green.

T2.10 Meter and Fire Service Connections

Any water meter and fire service connection made to new water distribution mains shall be at locations called for in the plans, in meter set cards, or as otherwise directed by the Department. No meter or fire service connections are to be installed outside right-of- way limits unless easements have been provided or as directed by the Engineer. Any trenching, excavation, backfilling, cutting, tapping necessary to install meter and fire service connections and such incidental work associated with the installation of meter and fire service system shall be performed in strict accordance with these specifications or as directed by the Engineer. Meters and double detector check valves shall be handled so as to avoid any damage at all times.

Meter services to be transferred to new replacement water mains (designated in the plans as circled meters) shall include new tap of the new water main for the service line, installation of appropriate sized HDPE tubing service line, and new HDPE meter box in accordance with Water Department Meter Details.

Locations of existing meters shall remain unchanged, unless otherwise noted on the plans or as directed by the Engineer.

T3.00 TESTING

The Department will require the Contractor to perform the required tests to ensure that all pipe installed including service lines meets the Department's standards. The required tests are as follows:

T3.01 Hydrostatic Testing

1. Pressure Testing

All newly laid pipe, including fittings, valves and service lines shall be pressure tested in accordance with AWWA Standard C600 and these documents where applicable.

The Contractor shall provide all necessary equipment and instrumentation (pressure gauges, volume gauges, hoses pumps, test pipe, test fittings, etc.) required for flushing and testing of the piping systems. Pressure gauges shall be marked in graduated increments that do not exceed 2 pounds per square inch. Gauges used to measure the volume of water necessary to raise post-test line pressure back to the highest pressure achieved during the test duration will be marked in graduated increments which do not exceed 5 ounces. If requested by the Engineer, the Contractor shall furnish to the Engineer certified test data for the pressure gauges and recorders used on hydrostatic equipment. Water for test purposes will be supplied by the Department. At the option of the Engineer, flow meters and/or pressure gauges used on hydrostatic testing equipped with approved strip or round chart recorders shall be supplied by the Contractor. Tests shall be made in sections not to exceed 1/2 mile. Testing shall be conducted in the presence of and to the satisfaction of the Engineer as a condition precedent to the approval and acceptance of the system. Not less than 3 days of notice shall be given prior to start of such tests, and such testing shall not be scheduled until preliminary testing by the Contractor has indicated that the test section is ready for testing. The schedule and procedures for testing shall be determined by the Contractor and reviewed with the Engineer prior to testing.

The duration of each pressure test shall be at least 2 hours with a minimum test pressure in excess of 150 psi. At no time shall the test or line pressure exceed 190 psi. If required by the Engineer, pump test equipment will be equipped with pressure relief valves pre-set to 190 psi. Each valved section of pipe shall be slowly filled with water and a pump shall be connected to the low point of the section being tested.

Before conducting the test, the Contractor shall backfill all pipe and reaction blocking unless the Engineer directs certain joints or connections to be left uncovered. When reaction blocking is provided, the pressure test shall not be made until adequate curing time for the blocking has been allowed.

Before application of the test pressure, all air shall be expelled from the pipe. To accomplish this, taps will be made, if necessary, at points of highest elevation and afterward tightly stopped with tapered brass plugs, all at the Contractor's expense.

At the end of the 2-hour test period, the Contractor will be required to pump the lines back up to the

highest pressure obtained during the duration of the test period.

Pressure tests shall be made between valves to demonstrate the ability of the valve to sustain pressure. All piping systems shall be tested in accordance with these test methods in addition to any other tests required by local plumbing codes or building authorities.

Throughout the duration of the test, the Contractor is required to maintain a minimum pressure in excess of 150 psi. The Contractor is advised that, should the test pressure fall to or below 150 psi any time during the 2-hour test, the test will be considered invalid and a retest will be required. Therefore, it is advised that the Contractor should pump water into the line as the test pressure approaches 150-psi.

The Contractor is warned that pressure testing against existing valves is done at his own risk. Failure of these valves to hold test pressure will not relieve the Contractor of the pressure testing.

All exposed pipe, fittings, valves and joints shall be carefully examined for leaks. Any cracked or defective pipe, fittings, valves or other appurtenances discovered as a consequence of the pressure test shall be removed and replaced with acceptable material. All leaking or defective joints shall be repaired, corrected or replaced. After all necessary replacements and corrections have been made, the test shall be repeated to the satisfaction of the Engineer.

If the pipeline fails the pressure test twice, then the Contractor shall be required to retest the pipeline and provide to the Department certification by a Professional Engineer registered in the State of Florida, that the pipeline has passed the test in accordance with these standards prior to the Water Department scheduling and witnessing the pressure test.

2. Leakage Tests for Pipelines

Concurrently with pressure testing, pipelines shall be subjected to leakage tests.

Leakage measurements shall not be started until a constant test pressure has been established in excess of 150 psi.

The duration of each leakage test shall be at least 2 hours and the test pressure shall be as specified for the pressure tests. Leakage is defined as the quantity of water that must be supplied into the pipeline or section thereof to maintain the established test pressure after the air in the pipeline has been expelled and the pipe filled with water plus that volume of water required at the conclusion of the test to bring the line pressure back up to the highest pressure obtained during the duration of the test period.

The maximum allowable leakage shall not exceed the number of gallons per hour (gph) as determined by the following formula:

$$L = (SD \times \sqrt{P}) / 148{,}000$$

where,

L - allowable leakage, gph
S - length of pipeline tested, feet
D - nominal diameter of the pipe, inches

P - average test pressure during the leakage test, psi gage

When leakage exceeds the allowable limit, the defective pipe or joints shall be located and repaired. All visible leaks are to be repaired regardless of the amount of leakage. If the defective portions cannot be located, the Contractor shall remove and reconstruct as much of the work as is necessary until the leakage is within the allowable limits. Such corrective work or damages to other parts of the work as a result of such work shall be at the Contractor's expense.

Leakage detection at mechanical joints shall be stopped by tightening the gland (not to exceed required torque) and leaking slip joints shall be cut out and entirely replaced or if permission is given by the Engineer, it may be repaired by a suitable clamp. Any split, cracked or defective pipe, fittings, valves, or hydrants discovered as a result of this test shall be removed and replaced by the Contractor with sound material and then test shall be repeated.

If the pipeline fails the test twice, the Contractor shall be required to retest the pipeline and provide the Department certification by a Professional Engineer registered in the State of Florida that the pipeline has passed the test in accordance with these standards.

T3.02 Disinfection

The Contractor shall disinfect the water mains in accordance with the applicable section of the latest AWWA Specification C651, as summarized below. The Contractor, if directed, shall use the method specified by the Engineer.

Method of Chlorination

1. Slug Method

The slug method consists of: a) Completely filling the main in order to remove air pockets, b) flushing the main with a velocity of not less than 2.5 feet per second (fps) in order to remove particles, c) at a point not more than 10 feet downstream of the water source flushing the new main; chlorine is to be continuously injected for a sufficient period to develop a solid column or "slug" of chlorinated water, d) the slug of chlorinated water is to move through the main exposing all interior surfaces to a chlorine concentration of approximately 100 mg/L for at least a 3 hour period.

2. Continuous Feed Method

The continuous feed method consists of a) completely filling the main to remove air pockets, b) flushing the main with a velocity not less than 2.5 fps, c) at a point not more than 10 feet downstream of the water source flushing the new main; chlorine is to be injected in the new main at a constant rate sufficient to establish a 25 mg/L chlorine concentration throughout the main, d) Note table for amount of sufficient chlorine required for each 100 foot section of pipe of various diameters.

Pipe Diameter	100% Chlorine (1b)	1% Chlorine Solution (gal)
4	0.013	0.16

6	0.030	0.36
8	0.054	0.65

The chlorinated water shall be retained in the main for at least 24 hours and have a residual of not less than 10 mg/L free chlorine prior to flushing.

3. Testing

Upon completion of the hydrostatic test and disinfection, the Contractor shall contact the Department's Construction Section requesting a bacteria test. The Contractor shall install sample taps on the new main and at the end of each new branch of the piping system. The Contractor shall flush the chlorinated disinfection water from the piping system until a free chlorine residual of 1 to 1.5 mg/L is maintained. The Engineer will pull a water sample on 2 consecutive days allowing 24 hours for each sample to be processed.

The contractor shall coordinate the scheduling of the sampling procedure a minimum of one-week in advance of wanting the sample to be pulled. Due to the varying workload, the sample will be scheduled and pulled as the schedule permits. All failed samples, or samples that are not ready at the time of collection, will be charged to the contractor at the current rate it costs the Department per sample.

Due to the requirements from the FDEP, the contractor may be required to remobilize to the job site thirty to forty-five days after the samples have been cleared to perform necessary meter transfers and/or cut and plugs.

Samples for bacterial analysis will be taken and analyzed by the Department. The sampling process may only begin on Mondays or Wednesdays. Two consecutive approved samples, taken 24 hours apart, will be required. Those samples will be pulled by the Water Department 24 hours apart. If the first sample is taken on Monday, the second sample must be taken on Tuesday. If the first sample is taken on Wednesday, the second sample will be taken on Thursday. No samples will be taken on Friday and the sampling process will not begin on Tuesday or Thursday. All drilling and tapping equipment shall be sterilized as directed by the Engineer.

After completing the testing and sterilizing and regardless of ground conditions, all sample taps and corporation stops shall be removed from the pipe and replaced with tapered brass plugs.

T4.00 RESTORATION

T4.01 Waste Material Disposal

The Contractor shall remove and dispose of all debris and excess spoil resulting from clearing, demolition and excavation operations. Natural waterways or bodies water shall not be used for disposal or debris.

All debris shall be disposed of at a site approved and permitted by the State for such disposal. Clean spoil may be disposed on private property only with written authorization of the property owner.

Burning of brush or debris may be permitted, if allowed by the City, subject to the Contractor's securing

permits and providing such fire watch and notification of local fire companies as may be required by local law or ordinance. Such permits, however, shall not relieve the Contractor of his responsibilities or liabilities with regard to protecting public health or properties.

T4.02 Repair and Resurfacing

Where street paving, driveways, sidewalks or curb and gutter is disturbed, restoration shall be made to a condition at least equal to the original. All materials used for restoration shall conform to standard requirements of that particular agency responsible for roadway maintenance where construction takes place. All restoration work shall also meet the requirements of both the permitting agency as well as the City. The Contractor shall determine, to his own satisfaction, any requirements and procedures, other than those set forth herein, which may affect the type, quality and method of carrying out the restoration to the satisfaction of the Department of areas to be restored.

Base material shall be of the type removed or of equal or greater structural strength as determined by the Engineer. Existing base material from the excavation shall not be reused as base material, but may be used as a stabilizer, or for trench backfill after removal of existing asphalt, unless it is determined by the Engineer to be unsuitable.

Edges of pavement shall be mechanically sawed to provide a neat, straight edge to the width shown on the plans, or greater if necessary, prior to replacement. Base material shall be placed to the depths required by permitting agency and thoroughly compacted to the density required by the Department or to the standard of the governing permitting agency.

The Contractor shall pay careful attention to the proper reconstruction of the pavement adjacent to the gutters and at street intersections to obtain satisfactory drainage to inlets from the intersecting streets.

T4.03 Sodding

All areas designated by the Engineer to be sodded shall be sodded according to installation procedures and materials outlined herein.

Sod shall be of the same type as the surrounding grassed areas (unless specified otherwise by the Department), be free of weeds, and have well matted roots. The sod shall be live, fresh, and uninjured at the time of placing. Materials for sodding shall meet the applicable requirements of Sections 575 and 981 of the FDOT Standard Specifications, or the requirements of the governing permitting agency. Except as required to match surrounding grassed areas, sod may be St. Augustine, Bahia, or other varieties as selected by the Department.

Areas designated to be sodded shall first be fine graded to match surrounding areas and scarified or loosen to a suitable depth. Sod shall be placed as soon as possible after being dug and shall be shaded and kept moist from the time it is dug until it is planted. Methods for sodding shall meet the applicable requirements of Section 575 of the FDOT Standard Specifications, or the governing permitting agency.

T4.07 PAVEMENT/RIGHT OF WAY RESTORATION REQUIREMENTS – Rev. 2009

SECTION 1

PAVEMENT RESTORATION SPECIFICATIONS

1.0 BACKFILL and SUBGRADE: Replace and compact clean sub-grade material classified as A-1, A-2, A-3. Backfill shall be free of objectionable material (bricks, broken pavement, concrete, clay, muck, etc.). If flowable fill is used both mix and installation shall conform to FDOT Standard Specifications for Road and Bridge Construction (January 2000), Section 121-1 through 121-6.

1.1 Density Requirements: Material shall be compacted in lifts not to exceed 12". Densities are required at alternative 1' lifts of vertical fill above excavation bottom of trench and for each prepared trench segment, not to exceed 200'. Density test is not to be taken through succeeding layers. The final subgrade density test shall be taken at elevation beneath Base Material or Full depth.

1.2 Density Specification: Shall meet 98% compaction of AASHTO T-180.

2.0 BASE MATERIAL: Approved by a City of Tampa D.P.W. Engineer and/or meeting the FDOT Standard Specifications for Road and Bridge Construction (January 2000). Submittal may be requested by C.O.T.

2.1 Acceptable Materials: Limerock, Shell Marl, Crushed Concrete.

2.2 Density Requirements: Place and compact in two lifts. Densities are required for each trench segment at final grade, not to exceed 200'.

2.3 Density Specifications: Shall meet 98% compaction of AASHTO T-180.

2.4 Base Options:

A. Limerock, Shell Marl: shall meet Section 1-2 BASE MATERIALS, requires brick joints to be sealed with Asphaltic Steep #7330 or Surebond 1300 Sealer.

B. Crush Concrete: Shall meet Section 1-2 BASE MATERIALS, requires brick joints to be sealed with 1:4 sand cement mixture (slurry or moistened to ensure that cement sets).

2.4.1 Density Requirements: Subgrade material shall meet Section 1-1 BACKFILL and SUBGRADE. Base material shall meet Section 1-2 BASE MATERIAL.

2.4.2 Density Specifications: Shall meet 98% compaction of AASHTO T-180.

SECTION 2PAVEMENT RESTORATION PROCEDURES

GENERAL:

The Permit holder is to contact D.P.W. Technical Services at (813) 635-1949 or Fax. 622-1956, 48 hours prior to starting permitted work. **The material testing results should be forwarded to the department/inspection group performing the inspection**

Testing/Inspection shall be scheduled with D.P.W. Materials Testing and Inspections on any part of the replacement work. Tests will be performed by the City's Testing/Inspections Lab or an approved private engineering testing laboratory. **Contact: (813) 635-3408**.

The Foreman on each project shall maintain on-site, copies of the approved Department of Public Works "Application and Permit for Construction and Maintenance Operations within Public Rights of Way, including plans, drawings, and the Pavement Restoration Requirements – 2003.

Copies of all applicable material delivery tickets and copies of all test results not taken by D.P.W. Materials Testing and Inspections, shall be forwarded to D.P.W. Technical Services at 3806 26 Ave East, Tampa, Fla. 33605. Fax number (813)-622-1956.

EXCAVATION:

Utility installations shall be placed a minimum of 30" below grade. If, because of utility conflicts or unusual conditions, the 30" minimum depth requirement cannot be maintained, special authorization may be granted for installation at a lesser depth. Installations shall maintain the 30" depth, unless special authorization is granted in writing, by the D.P.W. Engineer.

All trench widths under pavement, including driveways, are to be a minimum of 18", to allow mechanical compaction of backfill and base. Density tests are required and restoration shall meet SECTION 1.

Where pavement and/or base are undermined, disturbed, or otherwise damaged, such areas shall be cut away and the pavement replacement work extended to correct such conditions.

Tunneling under driveways, sidewalks, curbing, retaining walls, and pavement shall not be allowed unless approved prior to work is given by C.O.T. Engineer.

When obstructions are encountered in driving or jacking, pipe shall be cut off, left in place, and filled with a flowable fill type grout to prevent the formation of voids.

Edges of jacking pits, directional bore pits, exit pits, trenches, etc. shall be a minimum distance, equal to the depth of the pit excavation, from any pavement, curbs, sidewalks, or other structures. If this distance cannot be maintained, backfill shall be compacted in lifts not to exceed 12" and density tests taken as outlined in SECTION 1-1.

Ditches shall be restored promptly to prevent the formation of sediment in the existing drainage system. Erosion control shall be enforced. The existing ditch grade and cross section profile shall be maintained. The City will require sodding, sprigging, or seeding and mulching to restore stable cover of vegetation on ditch banks, shoulders, and other areas disturbed by construction. Vegetation restoration will be kept moist and maintained until well established. Staking of sod will be required if ditch slope exceeds 4:1.

Erosion control shall abide by Erosion Control Methods set forth in C.O.T: D.P.W. Standard Drawings where applicable

Lawn and landscaped areas shall be restored to original or better condition. Each situation may require individual attention and differing restoration procedures.

CONCRETE

Concrete sidewalks, driveways or pavement affected by construction operations will be corrected by removing and replacing full panels. Cuts in concrete sidewalks or driveways shall be sawed in straight lines at panel joints and replaced to full panels.

Concrete replacement shall be a minimum thickness of 6” for driveways and 4” for sidewalks. Concrete and density requirements shall meet SECTION 1-3.

Concrete curb and gutter will be formed and placed as a single unit to conform to City of Tampa Standards.

Expansion joints shall be provided at not more than 50’ intervals on curb and sidewalk replacement work.

Expansion material shall be used where new concrete meets existing. Sidewalks shall have tooled construction joints or sawed control joints at 5’ intervals for 5’ wide sidewalk and 6’intervals for 6’wide sidewalk

ASPHALT:

Asphalt replacement shall be in accordance with asphalt specifications in the Stormwater section of these contract documents.

TEMPORARY RESTORATION

Temporary pavement surfaces and sub surface materials shall be restored conforming to all requirements regarding configuration, thickness, and density as detailed in SECTION 1. The pavement shall be temporary finished with a suitable grade of asphalt and sand to provide a temporary-wearing course and to eliminate a dust nuisance. Temporary pavement shall be restored with the proper **permanent** surface within specified time period stated in the legal Permit for Construction and Maintenance Operations within Public Rights of Way.