CONTRACT NUMBER 19-C-00013

LOWRY PARK AND DAVIS ISLANDS SEAPLANE BASIN PARK DOCKS IMPROVEMENTS

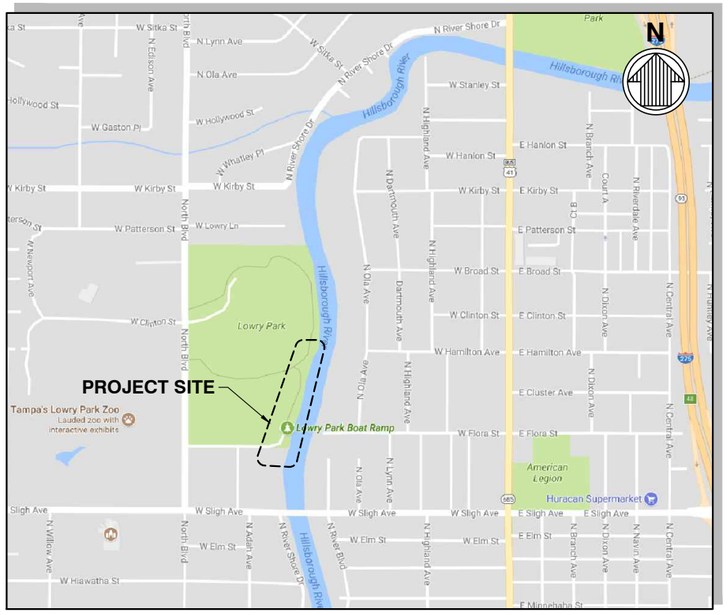

LOWRY PARK LOCATION PLAN
N.T.S.

SOURCE: LABINS.ORG

DAVIS ISLAND LOCATION PLAN
N.T.S.

PREPARED BY:

moffatt & nichol
501 E KENNEDY BLVD
SUITE 1910
TAMPA, FL 33602
813-258-8818
LIC: EB-0004877

PREPARED FOR:

CITY OF TAMPA
DEPARTMENT OF PUBLIC WORKS
CONTRACT ADMINISTRATION DEPARTMENT
306 E. JACKSON STREET 4N, TAMPA, FLORIDA 33602
813. 274. 8773 (FAX) 813. 274. 8080

100% SUBMITTAL
SEPTEMBER 13, 2018

Mark	Description	Date	Appr.

DAVIS ISLANDS BOAT RAMP DOCK IMPROVEMENTS

MASTER COVER SHEET

moffatt & nichol
501 E. KENNEDY BLVD., SUITE 1910
TAMPA, FLORIDA 33602
(813) 258-8818

Designed by: IWC
Date: 2018-10-31
Rev. -
Dwn by: ARS
Ckd by: IWC
M&N Project No. 9678-01
Reviewed by: GWS
Drawing code:
Submitted by: ISAAC CANNER, P.E. MOFFATT & NICHOL
Drawing Scale:
Plot scale: 1:1 (D SHEET)

SEAL

Sheet Reference No.
G-000
INDEX: – OF –

File: Q:\TA\9678-01\cadd_Active_davis island\967801-DI_G-000; Plotted: 10/31/2018 4:09 PM by SMITH, ANTHONY R.; Saved: 10/31/2018 3:55 PM by ARSMITH

DRAWING SCALES SHOWN BASED ON 22"x34" DRAWING

DAVIS ISLANDS BOAT RAMP DOCK IMPROVEMENTS

SECTION 31, TOWNSHIP 29S, RANGE 19E
TAMPA, FLORIDA

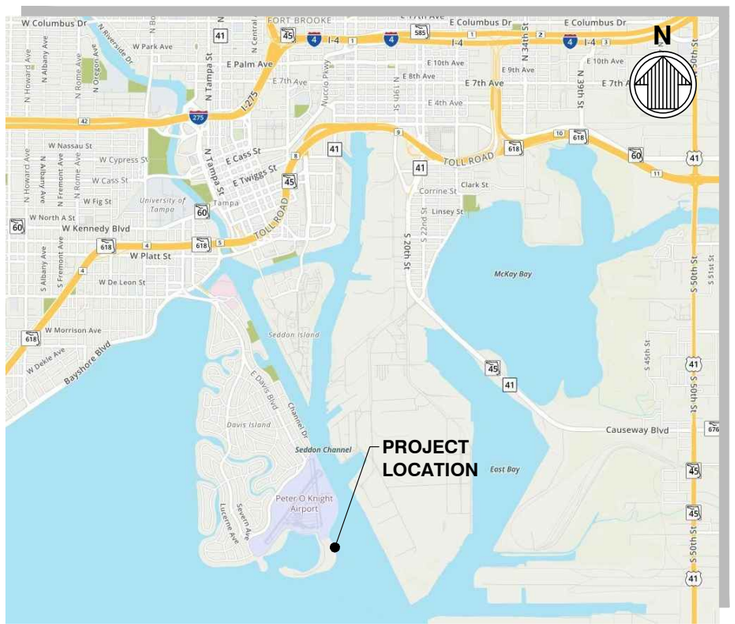

SOURCE: MAPQUEST

VICINITY MAP
N.T.S.

INDEX OF DRAWINGS		
INDEX NO.	SHEET NO.	DRAWING TITLE
1	G-001	COVER SHEET AND INDEX OF DRAWINGS
2	G-002	ABBREVIATIONS, LEGEND AND GENERAL NOTES
3	G-003	GENERAL NOTES
4	V-101	EXISTING CONDITIONS
5	V-102	EXISTING CONDITIONS AND DEMOLITION ENLARGED PLAN
6	V-301	EXISTING DEMOLITION DOCK SECTION
7	V-401	EXISTING DEMOLITION DOCK PLANS & SECTIONS
8	C-101	DREDGING PLAN AND SECTION
9	S-001	STRUCTURAL NOTES
10	S-101	DOCK LAYOUT PLAN
11	S-501	FLOATING DOCK DETAILS
12	S-502	GANGWAY DETAILS
13	S-503	LANDING DETAILS
14	S-520	AIDS TO NAVIGATION & SIGN DETAILS

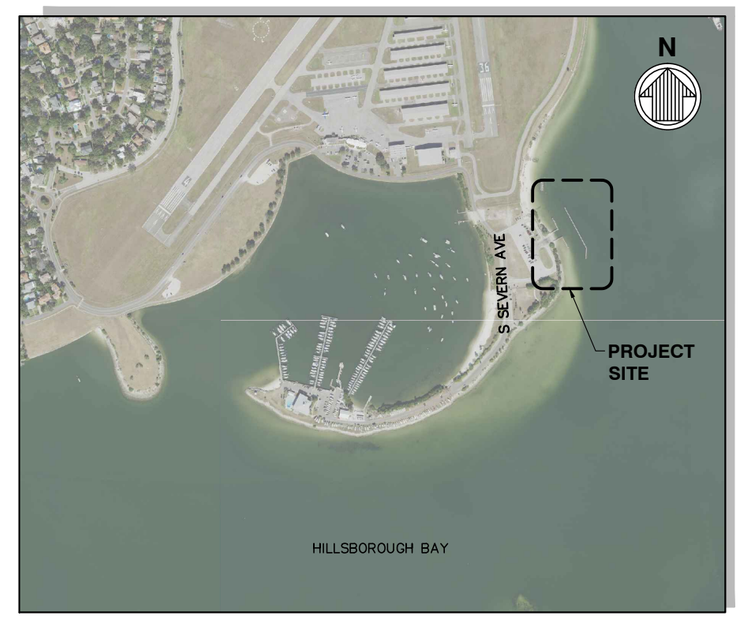

SOURCE: LABINS.ORG

LOCATION PLAN
N.T.S.

PREPARED BY:

moffatt & nichol
501 E KENNEDY BLVD
SUITE 1910
TAMPA, FL 33602
813-258-8818
LIC: EB-0004877

PREPARED FOR:

CITY OF TAMPA
DEPARTMENT OF PUBLIC WORKS
CONTRACT ADMINISTRATION DEPARTMENT
306 E. JACKSON STREET 4N, TAMPA, FLORIDA 33602
813. 274. 8773 (FAX) 813. 274. 8080

100% SUBMITTAL
SEPTEMBER 13, 2018

Mark	Description	Date	Appr.

DAVIS ISLANDS BOAT RAMP DOCK IMPROVEMENTS

COVER SHEET AND INDEX OF DRAWINGS

Rev. –
Date: 2018-09-13
M&N Project No. 9678-01
Drawing code:
Drawing Scale:
Plot scale: 1:1 (0 SHEET)
Designed by: IWC
Dwn by: JMJ
Ckd by: IWC
Reviewed by: GWS
Submitted by: ISAAC CANNER, P.E. MOFFATT & NICHOL
moffatt & nichol
501 E KENNEDY BLVD., SUITE 1910
TAMPA, FLORIDA 33602
(813) 258-8818

SEAL

Sheet Reference No.
G-001
INDEX: 1 OF 14

File: Q:\TA\9678-01\cadd_Active_davis island\967801-DI_G-001; Plotted: 10/31/2018 3:57 PM by SMITH, ANTHONY R.; Saved: 10/31/2018 3:40 PM by ARSMITH

DRAWING SCALES SHOWN BASED ON 22"x34" DRAWING

GENERAL NOTES

1. NOTES BELOW ARE NOT INTENDED TO REPLACE SPECIFICATIONS. IN ADDITION TO GENERAL NOTES SEE SPECIFICATIONS FOR REQUIREMENTS.

2. ALL WORK SHALL CONFORM TO THE REQUIREMENTS OF THESE DRAWINGS, PROJECT SPECIFICATIONS, PROJECT NOTES AND FDOT STANDARD SPECIFICATIONS WHEN REFERENCED. FDOT STANDARD SPECIFICATIONS ARE REFERENCED FOR MATERIAL SPECIFICATIONS AND CONSTRUCTION METHODS UNDER DIVISION II "CONSTRUCTION DETAILS". DIVISION I "GENERAL REQUIREMENTS AND COVENANTS" OF THE FDOT STANDARD SPECIFICATIONS DOES NOT APPLY. THE CONTRACT WITH THE OWNER SHALL GOVERN OVER FDOT SPECIFICATIONS. MEANS OF MEASUREMENT AND PAYMENT SHALL BE AS STIPULATED BY THE OWNER AND THE CONTRACT. FDOT STANDARD SPECIFICATIONS REFER TO THE FLORIDA DEPARTMENT OF TRANSPORTATION "STANDARD SPECIFICATION FOR ROADWAY AND BRIDGE CONSTRUCTION", 2017 EDITION AND ALL SUPPLEMENTAL SPECIFICATIONS.

3. SITE VERIFICATION: PRIOR TO BEGINNING CONSTRUCTION THE CONTRACTOR SHALL CHECK THE DRAWINGS AGAINST THE SITE CONDITIONS AND NOTIFY THE ENGINEER IN WRITING OF ANY DISCREPANCIES IN DIMENSIONS OR SITE CONDITIONS. THE CONTRACTOR SHALL NOT BEGIN CONSTRUCTION IN ANY SUCH AFFECTED AREA UNTIL THE DISCREPANCY HAS BEEN RESOLVED BY THE CONTRACTOR AND APPROVED BY THE ENGINEER.

4. ALL SAFETY REGULATIONS ARE TO BE STRICTLY FOLLOWED.

5. METHODS OF CONSTRUCTION AND ERECTION OF STRUCTURAL MATERIAL ARE THE RESPONSIBILITY OF THE CONTRACTOR.

6. THE CONTRACTOR SHALL, ON A DAILY BASIS, REMOVE FROM THE SITE ANY EXCAVATED MATERIAL OR DEBRIS. DISPOSAL OF THE MATERIALS IS THE RESPONSIBILITY OF THE CONTRACTOR. ALL DEBRIS SHALL BE DISPOSED OF IN A PERMITTED SANITARY LANDFILL.

7. THE CONTRACTOR SHALL PLACE CONSTRUCTION DEBRIS CONTROL DEVICES, BOOMS, TARPAULINS, FLOATS, STAGING, AND OTHER DEVICES AS NECESSARY TO PREVENT CONSTRUCTION DEBRIS FROM ENTERING THE WATER AND AIR BORNE MATERIALS FROM LEAVING THE IMMEDIATE VICINITY OF THE SITE. THE CONTRACTOR SHALL BE RESPONSIBLE FOR CLEAN-UP OF ANY MATERIALS DEPOSITED OUTSIDE THE WORK AREA OR IN THE WATER. SEE PERMIT CONDITIONS.

8. THE CONTRACTOR SHALL ABIDE BY ALL APPLICABLE LOCAL ENVIRONMENTAL PROTECTION STANDARDS, LAWS, AND REGULATIONS.

9. CONTRACTOR SHALL LOCATE ALL UTILITIES IN THE AREA OF CONSTRUCTION PRIOR TO COMMENCING WITH CONSTRUCTION. CONTRACTOR SHALL NOTIFY THE ENGINEER OF ALL CONFLICTS WITH EXISTING UTILITIES PRIOR TO COMMENCING WITH WORK IN THE CONFLICT AREA.

10. CONTRACTOR SHALL PROVIDE AS-BUILT SURVEY AND DRAWINGS OF COMPLETED WORK TO THE ENGINEER.

11. ANY DAMAGE TO STATE, COUNTY, OR LOCAL ROADS CAUSED BY THE CONSTRUCTION ACTIVITIES RELATED TO THIS PROJECT SHALL BE REPAIRED BY THE CONTRACTOR TO THE SATISFACTION OF THE CITY AND/OR LOCAL AUTHORITY.

12. THE CONTRACTOR IS RESPONSIBLE FOR ADHERING TO ALL PERMIT CONDITIONS AND REPORTING REQUIREMENTS.

13. UNLESS OTHERWISE NOTED, THE CONTRACTOR SHALL RESTORE DISTURBED AREAS TO ORIGINAL CONDITION TO MATCH ADJACENT GRADES AND SHALL REPLACE ANY DISTURBED PAVED OR GRASSED AREAS IN KIND.

14. THE CONTRACTOR IS SOLELY RESPONSIBLE FOR THE SAFETY, SECURITY AND PROTECTION OF PERSONNEL, EQUIPMENT, CONSTRUCTION, AND ADJACENT FACILITIES FOR THE DURATION OF THIS CONTRACT. THE CONTRACTOR AND HIS SUBCONTRACTORS SHALL PREPARE AND CONFORM TO A PROJECT SPECIFIC HEALTH AND SAFETY PLAN. THE HEALTH AND SAFETY PLAN SHALL INCLUDE APPLICABLE GUIDELINES AND REGULATIONS SET FORTH IN CURRENT OSHA AND FLORIDA STATUTES WITH SPECIFIC ATTENTION TO FLORIDA TRENCH SAFETY ACT AND OSHA TRENCH EXCAVATION SAFETY STANDARDS. THE ENGINEER OF RECORD AND OWNER WILL NOT BE RESPONSIBLE FOR JOB SITE SAFETY PROCEDURES.

15. ALL TEMPORARY UTILITIES NECESSARY FOR CONSTRUCTION SHALL BE PROVIDED AT THE EXPENSE OF THE CONTRACTOR.

16. THE CONTRACTOR IS TO PROVIDE EROSION CONTROL/ SEDIMENTATION BARRIERS (HAY BALES, SILTATION CURTAINS AND FLOATING TURBIDITY SCREENS)TO PREVENT SILTATION OF ADJACENT PROPERTY, STREETS, STORM SEWERS, AND WATERWAYS. IF, IN THE OPINION OF THE CITY AND/OR LOCAL AUTHORITIES, EXCESSIVE QUANTITIES OF EARTH ARE BEING TRANSPORTED OFF-SITE EITHER BY NATURAL DRAINAGE OR VEHICULAR TRAFFIC, THE CONTRACTOR IS TO REMOVE AND CLEAN SAID EARTH FROM TRAVEL WAYS TO THE SATISFACTION OF THE CITY AND/OR LOCAL AUTHORITIES.

17. CONTRACTOR SHALL CONTACT SUNSHINE STATE ONE CALL OF FLORIDA TO OBTAIN LOCATIONS OF UNDERGROUND UTILITIES PRIOR TO PERFORMING EXCAVATIONS.

18. THE CONTRACTOR SHALL CONSIDER AND PLAN FOR, ON A DAILY BASIS, THE EFFECT OF TIDAL FLUCTUATION IN THE EXECUTION OF THE WORK.

19. CONSTRUCTION IS EXPECTED TO BE PERFORMED FROM A BARGE. THE CONTRACTOR SHALL CONDUCT OPERATIONS SO AS TO NOT INTERFERE WITH OR BE DETRIMENTAL TO VESSEL AND VEHICULAR TRAFFIC DURING THE COURSE OF THE WORK AND SHALL PLAN FOR EFFECTS OF PASSING VESSELS.

20. SCALE BARS ARE INTENDED FOR REFERENCE ONLY. ALL DIMENSIONS NECESSARY FOR CONSTRUCTION SHALL BE TAKEN FROM DIMENSION ANNOTATION AND NOT SCALED DIRECTLY FROM DRAWINGS.

21. CONTRACTOR SHALL COORDINATE WITH REPRESENTATIVES OF PETER O. KNIGHT AIRPORT AND THE HILLSBOROUGH COUNTY AVIATION AUTHORITY REGARDING CONSTRUCTION ACTIVITIES AND EQUIPMENT USE DURING FLIGHT OPERATIONS.

SURVEY NOTES

1. ELEVATIONS SHOWN HEREON REFER TO THE NORTH AMERICAN VERTICAL DATUM OF 1988 (NAVD 88).

2. BEARINGS AND COORDINATES SHOWN HEREON ARE REFERENCED TO GRID BEARINGS BASED UPON THE FLORIDA STATE PLANE COORDINATE SYSTEM, TRANSVERSE MERCATOR PROJECTION, WEST ZONE, NORTH AMERICAN DATUM OF 1983 (ADJUSTMENT OF 1999).

3. EXISTING SITE SURVEY PREPARED BY GEORGE F. YOUNG, INC. DATED JUNE 13, 2017 AND IS ONLY INDICATIVE OF THE CONDITIONS EXISTING AT THAT TIME.

4. UNDERGROUND UTILITIES, FOUNDATIONS AND/OR OTHER IMPROVEMENTS HAVE NOT BEEN LOCATED EXCEPT THOSE SHOWN ON THIS SURVEY.

5. THE TIDAL DATUM RELATIONSHIP BASED ON FL NOAA VDATUM SOFTWARE IS AS FOLLOWS:

VERTICAL DATUM RELATIONSHIP

DATUM	ELEV
MHHW	1.03 FEET
MHW	0.76 FEET
NAVD 88	0.00 FEET
MLW	-1.21 FEET
MLLW	-1.65 FEET

ENVIRONMENTAL MEASURES

1. TURBIDITY BARRIERS SHALL BE MANUFACTURED IN ACCORDANCE WITH FDOT ROADWAY AND TRAFFIC DESIGN STANDARDS INDEX NO. 103.

2. DURING WATERSIDE CONSTRUCTION, THE CONTRACTOR SHALL MONITOR THE TURBIDITY LEVELS TO ENSURE THAT STATE WATER QUALITY STANDARDS ARE MAINTAINED AND CONSTRUCTION METHODS ARE IN ACCORDANCE WITH THE PERMITS.

3. DURING CONSTRUCTION THE CONTRACTOR SHALL PLACE EROSION CONTROL DEVICES AND MEASURES AROUND THE PROJECT AREA AND OTHER AREA(S) NEEDED TO PREVENT EROSION AND THE MIGRATION OF SEDIMENT TO POINTS OUTSIDE THE DEMOLITION/CONSTRUCTION AREA(S).

4. ALL EROSION CONTROL DEVICES SHALL BE IN ACCORDANCE WITH FDOT STANDARD SPECIFICATION 104 AND STANDARD INDEX NO. 102 OF THE FDOT ROADWAY AND TRAFFIC DESIGN STANDARDS.

5. CONTRACTOR SHALL ADHERE TO THE FFWCC STANDARD MANATEE CONDITIONS, NMFS SMALLTOOTH SAWFISH AND SEA TURTLE CONSTRUCTION CONDITIONS FOR IN-WATER WORK.

6. NO SEAGRASS WAS OBSERVED IN THE VICINITY OF THE PROJECT SITE DURING FIELD VISITS CONDUCTED ON MAY 10TH, JULY 13TH AND SEPTEMBER 22, 2017.

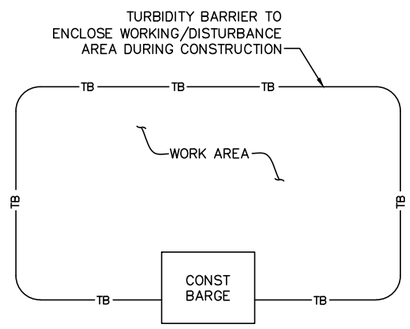

PLAN – OFF SHORE

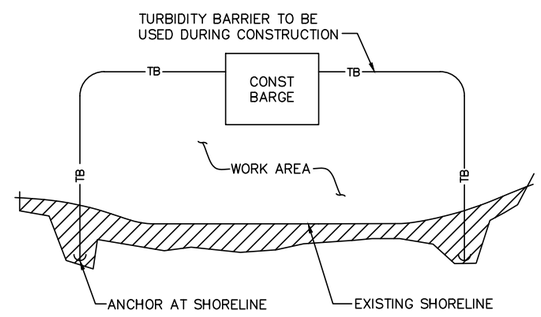

PLAN – ALONG SHORE

DETAIL – TURBIDITY CONTROL BARRIER

ABBREVIATIONS

ACZA = AMMONIACAL COPPER ZINC ARSENATE
ACQ = ALKALINE COPPER QUATERNARY
ADA = AMERICANS WITH DISABILITIES ACT
CCA = CHROMATED COPPER ARSENATE
CY = CUBIC YARDS
DBL = DOUBLE
EA = EACH
EL = ELEVATION
EQ = EQUAL
FDOT = FLORIDA DEPARTMENT OF TRANSPORTATION
FIG = FIGURE
GALV = GALVANIZED
LG = LONG
MAX = MAXIMUM
MHW = MEAN HIGH WATER
MHHW = MEAN HIGHER HIGH WATER
MIN = MINIMUM
MLW = MEAN LOW WATER
MLLW = MEAN LOWER LOW WATER
MSL = MEAN SEA LEVEL
NAD = NORTH AMERICAN DATUM
NAVD = NORTH AMERICAN VERTICAL DATUM 88
NIC = NOT IN CONTRACT
NMFS = NATIONAL MARINE FISHERIES SERVICE
OSHA = OCCUPATIONAL SAFETY AND HEALTH ADMINISTRATION
SF = SQUARE FOOT
SPA = SPACES
SS = STAINLESS STEEL
TYP = TYPICAL
UHMW- PE= ULTRA HIGH MOLECULAR WEIGHT-POLYTHYLENE
UON = UNLESS OTHERWISE NOTED
USCG = UNITED STATES COAST GUARD
WS = WATER SURFACE
℄ = CENTERLINE
' = MINUTES OR FEET
" = INCHES
& = AND
° = DEGREE
± = PLUS OR MINUS
ø = DIAMETER
PL = PLATE

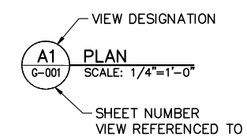

VIEW TITLE

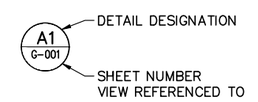

DETAIL CALLOUT

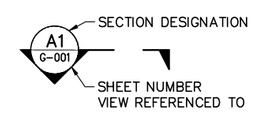

SECTION CALLOUT

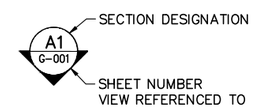

ELEVATION VIEW

100% SUBMITTAL
SEPTEMBER 13, 2018

CITY OF TAMPA FLORIDA ORGANIZED JULY 15 1887

Mark	Description	Date	Appr.

DAVIS ISLANDS BOAT RAMP DOCK IMPROVEMENTS

ABBREVIATIONS, LEGEND AND GENERAL NOTES

501 E. KENNEDY BLVD., SUITE 1910
TAMPA, FLORIDA 33602
(813) 258-8818
moffatt & nichol

Designed by: IWC		Date: 2018-09-13	Rev. -
Dwn by: JMJ	Ckd by: IWC	M&N Project No. 9678-01	
Reviewed by: GWS		Drawing code:	
Submitted by: ISAAC CANNER, P.E. MOFFATT & NICHOL		Drawing Scale: Plot scale: 1:1 (D SHEET)	

SEAL

Sheet Reference No.
G-002
INDEX: 2 OF 14

File: Q:\TA\9678-01\cadd_Active_davis island\967801-01_G-002; Plotted: 10/31/2018 3:57 PM by SMITH, ANTHONY R.; Saved: 9/11/2018 2:06 PM by JJORDAN

DRAWING SCALES SHOWN BASED ON 22"x34" DRAWING

DEMOLITION NOTES

1. CONTRACTOR SHALL TAKE ALL NECESSARY PRECAUTIONS TO STRICTLY CONTAIN THE DEMOLITION WITHIN THE LIMITS OF THE REQUIRED CONSTRUCTION AND AVOID ANY DAMAGE TO THE EXISTING STRUCTURES. PLAN SHALL INCLUDE DETAILED MEANS AND METHODS OF DEMOLITION WORK.
2. ANY DAMAGE INCURRED IN EXECUTION OF THIS CONTRACT TO ANY PART OF THE PROPERTY/STRUCTURE NOT SPECIFICALLY DESIGNATED FOR DEMOLITION SHALL BE REPAIRED, REPLACED, AND/OR RECONSTRUCTED BY THE CONTRACTOR TO ITS ORIGINAL CONDITION AS DIRECTED BY THE ENGINEER AT THE EXPENSE OF THE CONTRACTOR.
3. ALL DEMOLISHED MATERIAL, EXCEPT AS NOTED OTHERWISE, BECOMES THE PROPERTY OF, AND SHALL BE COMPLETELY REMOVED AND DISPOSED OF BY THE CONTRACTOR. THE REMOVAL, HANDLING, AND DISPOSAL OF ALL DEMOLITION MATERIALS SHALL BE IN STRICT ACCORDANCE WITH ALL LOCAL, STATE, AND FEDERAL REQUIREMENTS.
4. IT SHALL BE THE RESPONSIBILITY OF THE CONTRACTOR TO BECOME FAMILIAR WITH THE MATERIALS TO BE DISPOSED OF AND ALL GOVERNING AGENCY REQUIREMENTS.
5. ALL REMOVAL AND/OR RELOCATION OF EXISTING UTILITIES SHALL BE COORDINATED WITH THE ENGINEER OR OWNER PRIOR TO PROCEEDING WITH THE CONSTRUCTION.
6. THE CONTRACTOR IS RESPONSIBLE TO CONTROL FUGITIVE DUST ORIGINATING FROM THE PROJECT SITE DURING CONSTRUCTION BY WATERING OR OTHER METHODS AS REQUIRED.
7. THE CONTRACTOR IS RESPONSIBLE FOR THE LABORATORY TESTING OF DREDGE MATERIALS FOR CONTAMINATION AND DETERMINING LANDFILL DISPOSAL LOCATION.
8. REMOVED MATERIAL MAY REQUIRE DISPOSAL AT A CLASS 1 LANDFILL. THE COST, INCLUDING: LABORATORY TESTING, TRACKING, DISPOSAL FEES, AND DOCUMENTATION IS THE CONTRACTOR'S RESPONSIBILITY AND SHALL BE INCLUDED IN THE BID. MATERIALS MAY INCLUDE: TIMBER PILES AND DREDGE MATERIAL.
9. ALL SURVEY MONUMENTS WITHIN LIMITS OF CONSTRUCTION ARE TO BE PROTECTED.
10. TREATED TIMBER SHALL BE DISPOSED OF IN ACCORDANCE WITH LOCAL, STATE, AND FEDERAL REGULATIONS.
11. ALL CONCRETE SHALL BE ASSUMED TO BE STEEL REINFORCED.

TREE PROTECTION AND REMOVAL

1. ALL TREES TO REMAIN MUST BE PROTECTED BY PROTECTIVE BARRIERS. PROTECTIVE BARRIERS MUST REMAIN IN PLACE UNTIL LAND ALTERATION AND CONSTRUCTION ACTIVITIES ARE COMPLETED.
2. TREES LABELED AS "PRESERVE" ON SHEET V-102 SHALL BE RETAINED WHERE PRACTICABLE.
3. TREES TO BE REMOVED SHALL BE DISPOSED OFFSITE AT AN APPROVED LANDFILL FACILITY.
4. PRIOR TO TREE REMOVAL, CONTRACTOR SHALL CLEARLY MARK ALL TREES TO BE REMOVED USING PLASTIC TAPE, TREES DESIGNATED FOR REMOVAL SHALL BE CONFIRMED WITH CITY OF TAMPA.
5. DURING LAND ALTERATION AND CONSTRUCTION ACTIVITIES, IT SHALL BE UNLAWFUL TO REMOVE VEGETATION BY GRUBBING OR TO PLACE SOIL ON THE SITE UNLESS OTHERWISE APPROVED BY CITY PARKS DEPARTMENT.
6. IN ORDER TO MINIMIZE SOIL EROSION AND CONTRIBUTE TO WATER QUALITY, PROPOSED LAND ALTERATION ACTIVITIES SHALL NOT UNNECESSARILY REMOVE VEGETATION NOR ALTER EXISTING TOPOGRAPHY.
7. ADEQUATE PROTECTION MEASURES SHALL BE PROVIDED, AS NECESSARY, TO MINIMIZE EROSION AND DOWNSTREAM SEDIMENTATION CAUSED BY SURFACE WATER RUNOFF ON EXPOSED LAND SURFACES.

PROTECTIVE BARRIER REQUIREMENTS AND SPECIFICATIONS FOR EXISTING TREES TO REMAIN

1. PROTECTIVE BARRIERS ARE USED DURING LAND ALTERATION AND CONSTRUCTION ACTIVITIES TO PROTECT TREES AND NATURAL AREAS TO BE RETAINED ON-SITE.
2. PROTECTIVE BARRIERS MUST BE ERECTED AROUND TREES TO BE RETAINED WITHIN AN AREA WHERE LAND ALTERATION AND CONSTRUCTION ACTIVITIES WILL OCCUR AS WELL AS ALONG NATURAL AREAS WHERE SUCH AREAS ARE ADJACENT TO PERMITTED LAND ALTERATION OR CONSTRUCTION ACTIVITIES. A PROTECTIVE BARRIER MUST REMAIN IN PLACE UNTIL THE LAND ALTERATION AND CONSTRUCTION ACTIVITIES ARE COMPLETED OR UNTIL COMMENCEMENT OF GRADE FINISHING AND SODDING. NO GROUND DISTURBANCE MAY OCCUR WITHIN THE BARRICADED AREA.

FIG. A

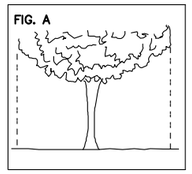

MINIMUM PROTECTION BARRIER SPECIFICATIONS

1. TO RESTRICT ACCESS INTO THE AREA WITHIN THE DRIPLINE OF A TREE, A PHYSICAL STRUCTURE (NOT LESS THAN 3 FEET IN HEIGHT, COMPRISED OF WOOD OR OTHER SUITABLE MATERIAL) IS PLACED AROUND THE TREE AT THE DRIPLINE, EXCEPT WHERE LAND ALTERATION OR CONSTRUCTION ACTIVITIES ARE APPROVED WITHIN THE DRIPLINE.
2. THE DRIPLINE OF A TREE IS THE IMAGINARY, VERTICAL LINE THAT EXTENDS DOWNWARD FROM THE OUTERMOST TIPS OF THE TREE'S BRANCHES TO THE GROUND AS SHOWN IN FIG. A.
3. NATURAL AREAS – TO RESTRICT ACCESS INTO AREAS WHERE LAND ALTERATION AND CONSTRUCTION ACTIVITIES ARE NOT AUTHORIZED, A PHYSICAL STRUCTURE NOT LESS THAN 3 FEET IN HEIGHT IS PLACED ALONG THE PERIMETER OF SUCH AREAS.

FIG. B

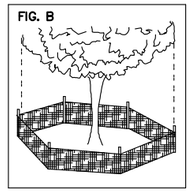

BARRIER SPECIFICATIONS FOR TREES

1. FOUR CORNER UPRIGHT STAKES OF NO LESS THAN 2" x 2" LUMBER CONNECTED BY HORIZONTAL MEMBERS OF NO LESS THAN 1" x 4" LUMBER; OR UPRIGHT STAKES SPACES AT 5' INTERVALS OF NO LESS THAN 2" x 2" LUMBER CONNECTED BY SILT SCREEN FABRIC OR MATERIAL OF COMPARABLE DURABILITY AS SHOWN IN FIG. B.
2. TREE PROTECTION BARRICADES TO BE INSTALLED AT A MINIMUM OFFSET OF TEN FEET OR AS DIRECTED BY PROJECT MANAGER.

FIG. C

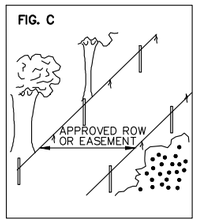

BARRIER SPECIFICATIONS FOR NATURAL AREAS

1. UPRIGHT STAKES OF NO LESS THAN 2" x 2" LUMBER SPACED NO MORE THAN 25' APART AND CONNECTED BY TWINE FLAGGED WITH PLASTIC SURVEYING TAPE AT REGULAR INTERVALS OF 5-10' AS SHOWN IN FIG. C.
2. OTHER METHODS OF DEMARCATION WILL BE CONSIDERED DEPENDING UPON THE CHARACTERISTICS OF THE SITE.
3. A BARRIER IS REQUIRED TO PROTECT ALL ABOVE GROUND PORTIONS OF TREES AND OTHER SIGNIFICANT VEGETATION FROM MECHANICAL DAMAGE. TO PROTECT ROOT SYSTEMS FROM COMPACTION. TO PROVIDE AWARENESS OF PROTECTED AREAS TO EQUIPMENT OPERATORS.

CONSTRUCTION QUANTITIES

EXISTING TO BE REMOVED

ITEM	QUANTITY	UNIT
NORTH DOCK	680	SF
SOUTH DOCK	685	SF
TIMBER PILES	88	NO.
SIDEWALKS	130	SF

DREDGING/SEDIMENT REMOVAL

ITEM	AREA (SF)	VOLUME (CY)
BOAT RAMP MAINTENANCE DREDGING	1397	37
DREDGING AT SOUTH DOCK	4415	188

CONCRETE WORK

ITEM	QTY (SF)	QTY (CY)
CONCRETE LANDING OVERWAYS	216	175
SIDEWALKS	300	150

FLOATING DOCKS AND GANGWAYS

ITEM	AREA (SF)
NORTH DOCK	896
SOUTH DOCK	896
NORTH GANGWAY	205
SOUTH GANGWAY	205
KAYAK DOCK	144

PILES

ITEM	BID QTY	BID LENGTH
TIMBER FENDER	6	32'
NO MOORING SIGN	4	30'
PRESTRESSED CONCRETE GUIDE PILES (SEE NOTES 1 &2)	–	–

NOTES FOR GUIDE PILES AND FLOATING DOCKS

1. THE CONTRACTOR IS RESPONSIBLE FOR DESIGNING THE FLOATING DOCKS AND GUIDE PILES.
2. GUIDE PILE DESIGN INCLUDES DETERMINING PILE SIZE, QUANTITY, LENGTH AND EMBEDMENT LENGTH REQUIRED TO MEET THE FLOATING DOCK DESIGN CRITERIA.

100% SUBMITTAL
SEPTEMBER 13, 2018

CITY OF TAMPA FLORIDA ORGANIZED JULY 15 1887

Mark	Description	Date	Appr.

DAVIS ISLANDS BOAT RAMP DOCK IMPROVEMENTS

GENERAL NOTES

moffatt & nichol
501 E. KENNEDY BLVD., SUITE 1910
TAMPA, FLORIDA 33602
(813) 258-8818

Designed by: IWC
Date: 2018-09-13
Rev. –
Dwn by: JMJ
Cad by: IWC
M&N Project No. 9678-01
Reviewed by: GWS
Drawing code:
Submitted by: ISAAC CANNER, P.E. MOFFATT & NICHOL
Drawing Scale:
Plot scale: 1:1 (0 SHEET)

SEAL

Sheet Reference No.
G-003
INDEX: 3 OF 14

File: Q:\TA\9678-01\cadd_Active_davis island\967801-D1_G-003; Plotted: 10/31/2018 3:57 PM by SMITH, ANTHONY R.; Saved: 9/11/2018 2:07 PM by JJORDAN

DRAWING SCALES SHOWN BASED ON 22"x34" DRAWING

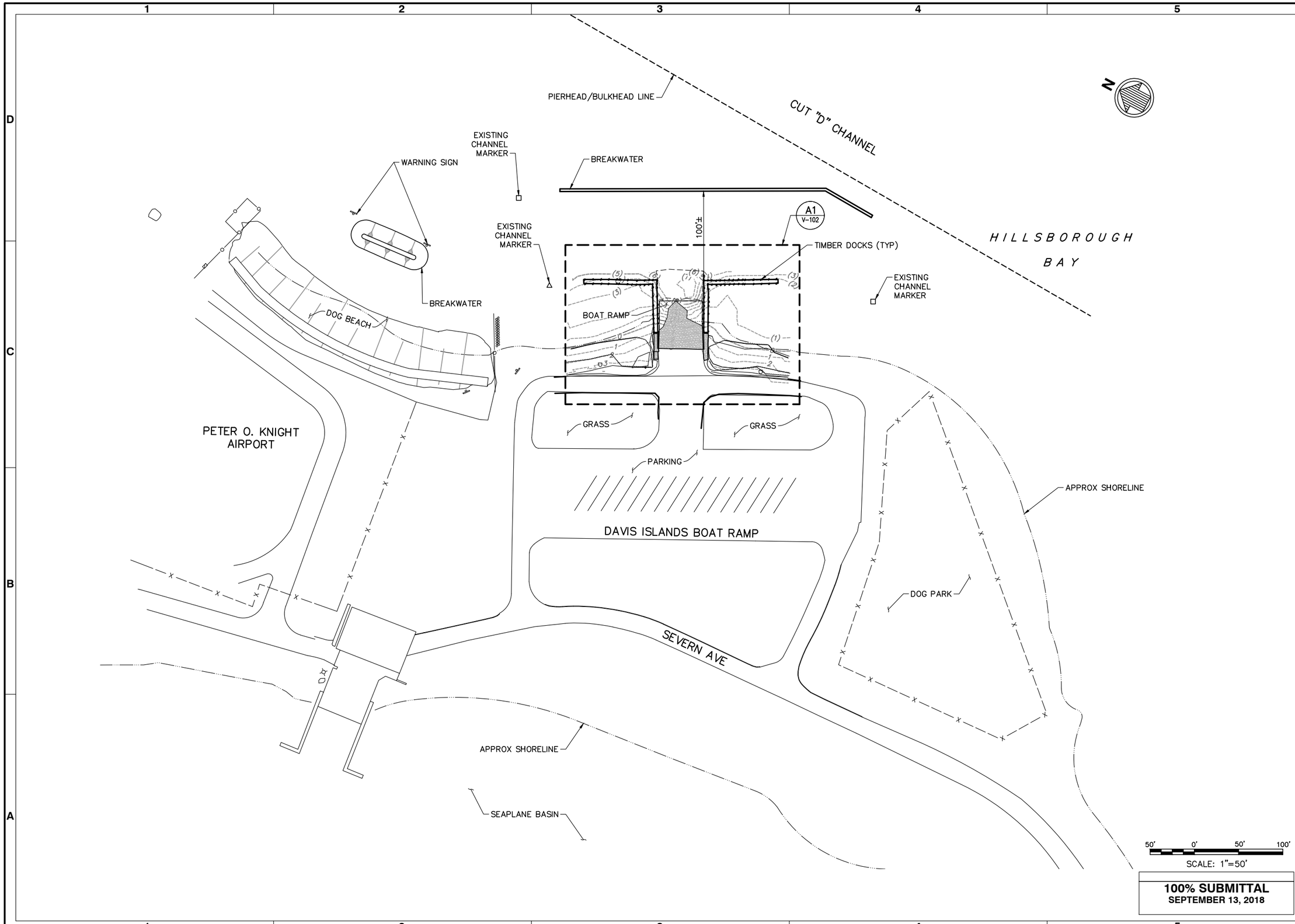

100% SUBMITTAL
SEPTEMBER 13, 2018

CITY OF TAMPA FLORIDA ORGANIZED JULY 15 1887

Mark	Description	Date	Appr.

DAVIS ISLANDS BOAT RAMP DOCK IMPROVEMENTS

EXISTING CONDITIONS

Rev. –
Date: 2018-09-13
M&N Project No. 9678-01
Drawing code:
Drawing Scale: Plot scale: 1:1 (D SHEET)

Designed by: IWC
Dwn by: JMJ
Ckd by: IWC
Reviewed by: GWS
Submitted by: ISAAC CANNER, P.E. MOFFATT & NICHOL

moffatt & nichol
501 E. KENNEDY BLVD., SUITE 1910
TAMPA, FLORIDA 33602
(813) 236-6818

SEAL

Sheet Reference No.
V-101
INDEX: 4 OF 14

File: Q:\TA\9678-01\cadd_Active_davis island\967801-DI_V-101; Plotted: 10/31/2018 3:58 PM by SMITH, ANTHONY R.; Saved: 9/12/2018 10:57 AM by JJORDAN

DRAWING SCALES SHOWN BASED ON 22"x34" DRAWING

HILLSBOROUGH BAY

82'±
50'±
83'±
5'±
5'±
5'±
5'±
59'±
59'±
18'±
19'±
12'±
12'±

C1 V-401 TYPICAL PLAN
REMOVE NORTH DOCK
APPROXIMATE LIMIT OF SCOUR MAT TO REMAIN
REMOVE SOUTH DOCK
B1 V-301
B4 V-401 (TYP)
TIMBER FENDER PILE TO BE REMOVED (TYP)
CONCRETE LANDING (TO REMAIN)
CONCRETE RAMP TO REMAIN
CONCRETE LANDING (TO REMAIN)
EDGE OF VEGETATION TO REMAIN
EDGE OF VEGETATION TO REMAIN – SEE G-003 NOTES
A4 V-301
REMOVE CONCRETE SIDEWALK
FISH CLEANING STATION (TYP)
VEGETATION TO REMAIN (TYP) – SEE G-003 NOTES
RIPRAP
RIPRAP
TOP OF BANK
TOP OF BANK
WATER FOUNTAIN
A1 V-301
ASPHALT PAVEMENT
MHW
0.43
2.26
2.40
2.08
1.97
3.72
3.86
0.01
0.28
0.77
0.83
3.77
3.72
3.45
3.70
3.58

A1 V-101 EXISTING CONDITIONS AND DEMOLITION ENLARGED PLAN
SCALE: 1" = 10'-0"

LEGEND

TO BE REMOVED

(3) EXISTING CONTOUR

TIMBER PILE TO BE REMOVED

10' 0'-0" 10' 20'
SCALE: 1"=10'

100% SUBMITTAL
SEPTEMBER 13, 2018

DRAWING SCALES SHOWN BASED ON 22"x34" DRAWING

CITY OF TAMPA FLORIDA ORGANIZED JULY 15 1887

Mark	Description	Date	Appr.

DAVIS ISLANDS BOAT RAMP DOCK IMPROVEMENTS

EXISTING CONDITIONS AND DEMOLITION ENLARGED PLAN

Rev. –
Date: 2018-09-13
M&N Project No. 9678-01
Drawing code:
Drawing Scale: Plot scale: 1:1 (0 SHEET)

Designed by: IWC
Dwn by: JMJ
Ckd by: IWC
Reviewed by: GWS
Submitted by: ISAAC CANNER, P.E. MOFFATT & NICHOL

501 E. KENNEDY BLVD., SUITE 1910
TAMPA, FLORIDA 33602
(813) 226-9818
moffatt & nichol

SEAL

Sheet Reference No.
V-102
INDEX: 5 OF 14

File: G:\TA\9678-01\cadd_Active_davis island\967801-DI_V-102; Plotted: 10/31/2018 3:58 PM by SMITH, ANTHONY R.; Saved: 9/12/2018 11:51 AM by JJORDAN

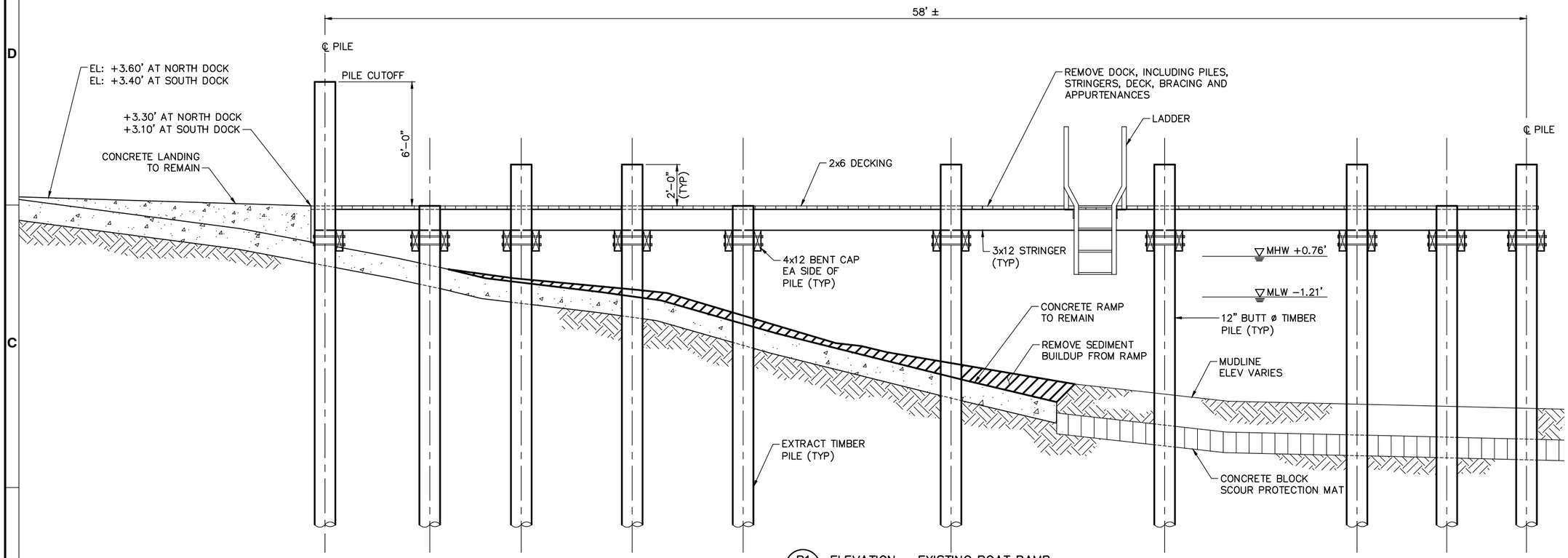

B1 / V-102 ELEVATION – EXISTING BOAT RAMP
SCALE: 3/8"=1'-0"

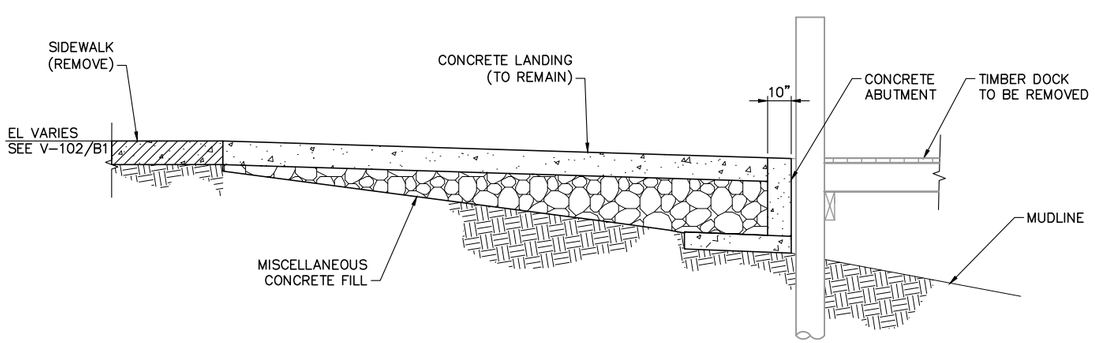

A1 / V-102 SECTION
SCALE: 3/8" = 1'-0"

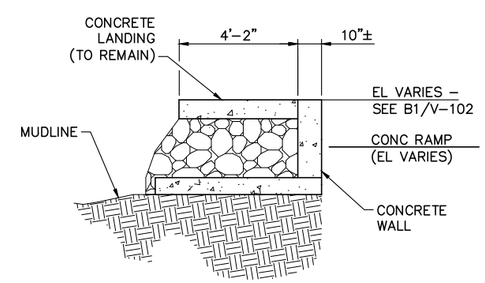

A4 / V-102 SECTION
SCALE: 3/8" = 1'-0"

4' 0'-0" 2' 4'
SCALE: 3/8"=1'-0"

100% SUBMITTAL
SEPTEMBER 13, 2018

CITY OF TAMPA FLORIDA ORGANIZED JULY 15 1887

Mark	Description	Date	Appr.

DAVIS ISLANDS BOAT RAMP DOCK IMPROVEMENTS

EXISTING DEMOLITION DOCK SECTION

Designed by: IWC
Dwn by: JMJ
Ckd by: IWC
Reviewed by: GWS
Submitted by: ISAAC CANNER, P.E. MOFFATT & NICHOL
Date: 2018-09-13
M&N Project No. 9678-01
Drawing code:
Drawing Scale:
Plot scale: 1:1 (0 SHEET)
Rev. –

moffatt & nichol
501 E. KENNEDY BLVD., SUITE 1910
TAMPA, FLORIDA 33602
(813) 258-8818

SEAL

Sheet Reference No.
V-301
INDEX: 6 OF 14

File: Q:\TA\9678-01\cadd_Active_davis island\967901-DI_V-301; Plotted: 10/31/2018 3:58 PM by SMITH, ANTHONY R.; Saved: 9/12/2018 11:51 AM by JJORDAN

DRAWING SCALES SHOWN BASED ON 22"x34" DRAWING

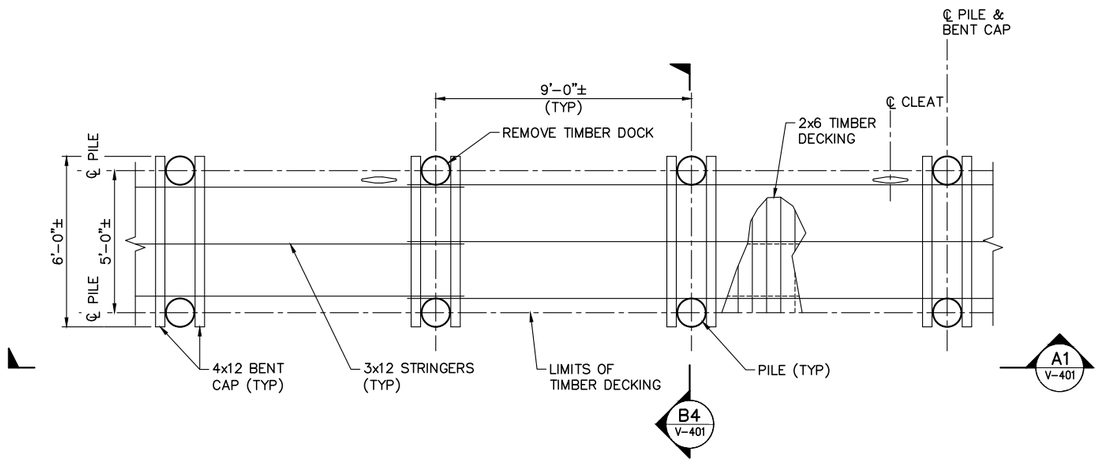

C1 / V-102 TIMBER DOCK DEMO PLAN
SCALE: 3/8"=1'-0"

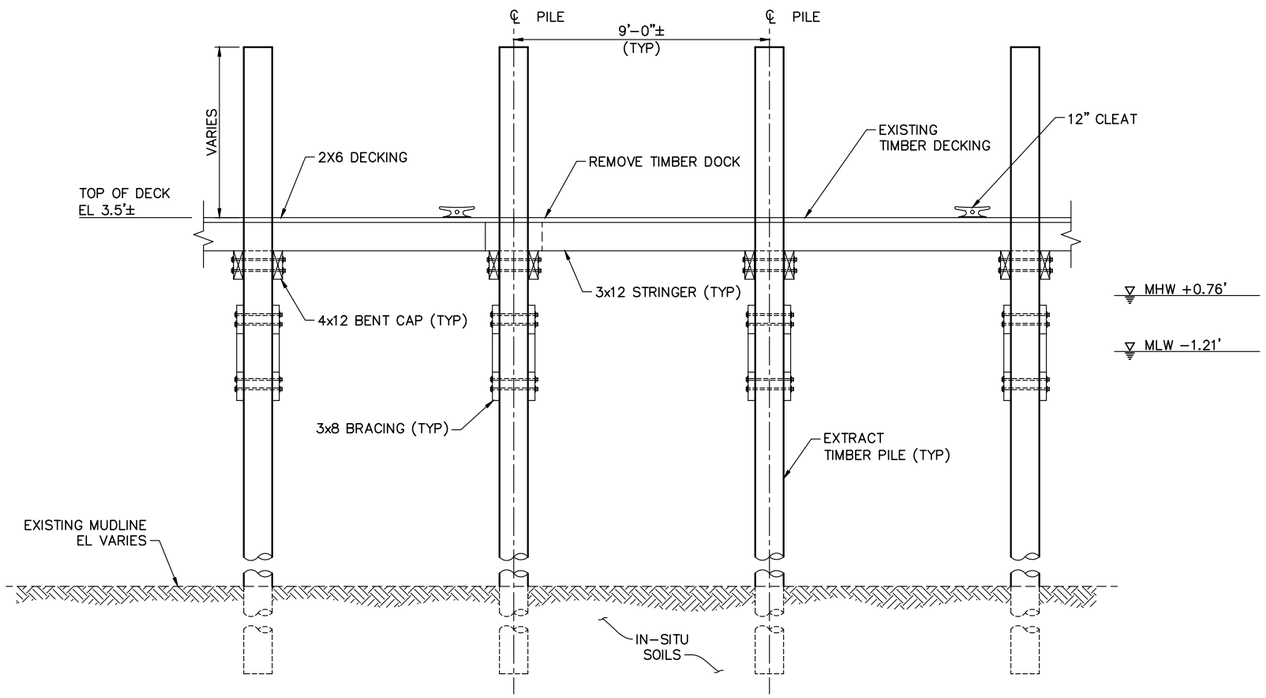

A1 / V-401 ELEVATION – TIMBER DOCK DEMO
SCALE: 3/8"=1'-0"

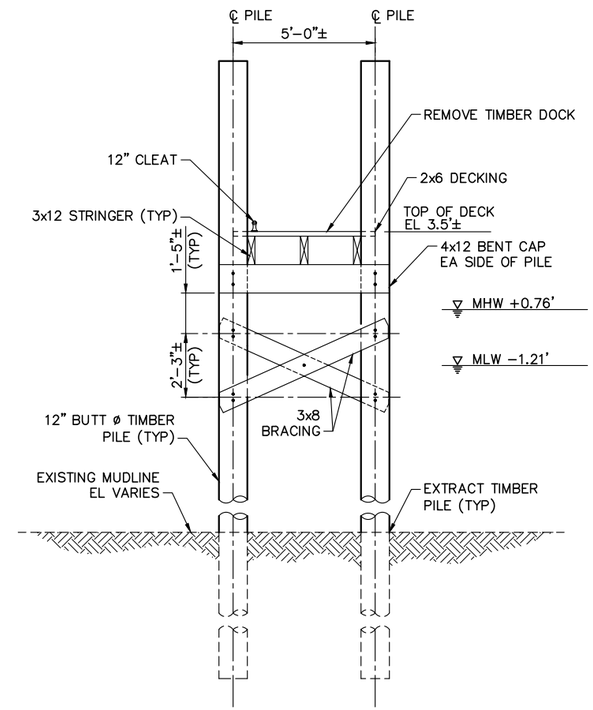

B4 / V-102 SECTION – TIMBER DOCK DEMO
SCALE: 3/8"=1'-0"

4' 0'-0" 2' 4'
SCALE: 3/8"=1'-0"

100% SUBMITTAL
SEPTEMBER 13, 2018

DRAWING SCALES SHOWN BASED ON 22"x34" DRAWING

Mark	Description	Date	Appr.

DAVIS ISLANDS BOAT RAMP DOCK IMPROVEMENTS

EXISTING DEMOLITION DOCK PLANS & SECTIONS

Date: 2018-09-13 | Rev. –
M&N Project No. 9678-01
Drawing code:
Drawing Scale:
Plot scale: 1:1 (D SHEET)

Designed by: IWC
Dwn by: JMJ
Ckd by: IWC
Reviewed by: GWS
Submitted by: ISAAC CANNER, P.E. MOFFATT & NICHOL

moffatt & nichol
501 E. KENNEDY BLVD., SUITE 1910
TAMPA, FLORIDA 33602
(813) 236-6818

SEAL

Sheet Reference No.
V-401
INDEX: 7 OF 14

File: Q:\TA\9678-01\cadd_Active_davis island\967801-DI_V-401; Plotted: 10/31/2018 3:58 PM by SMITH, ANTHONY R.; Saved: 9/12/2018 11:43 AM by JJORDAN

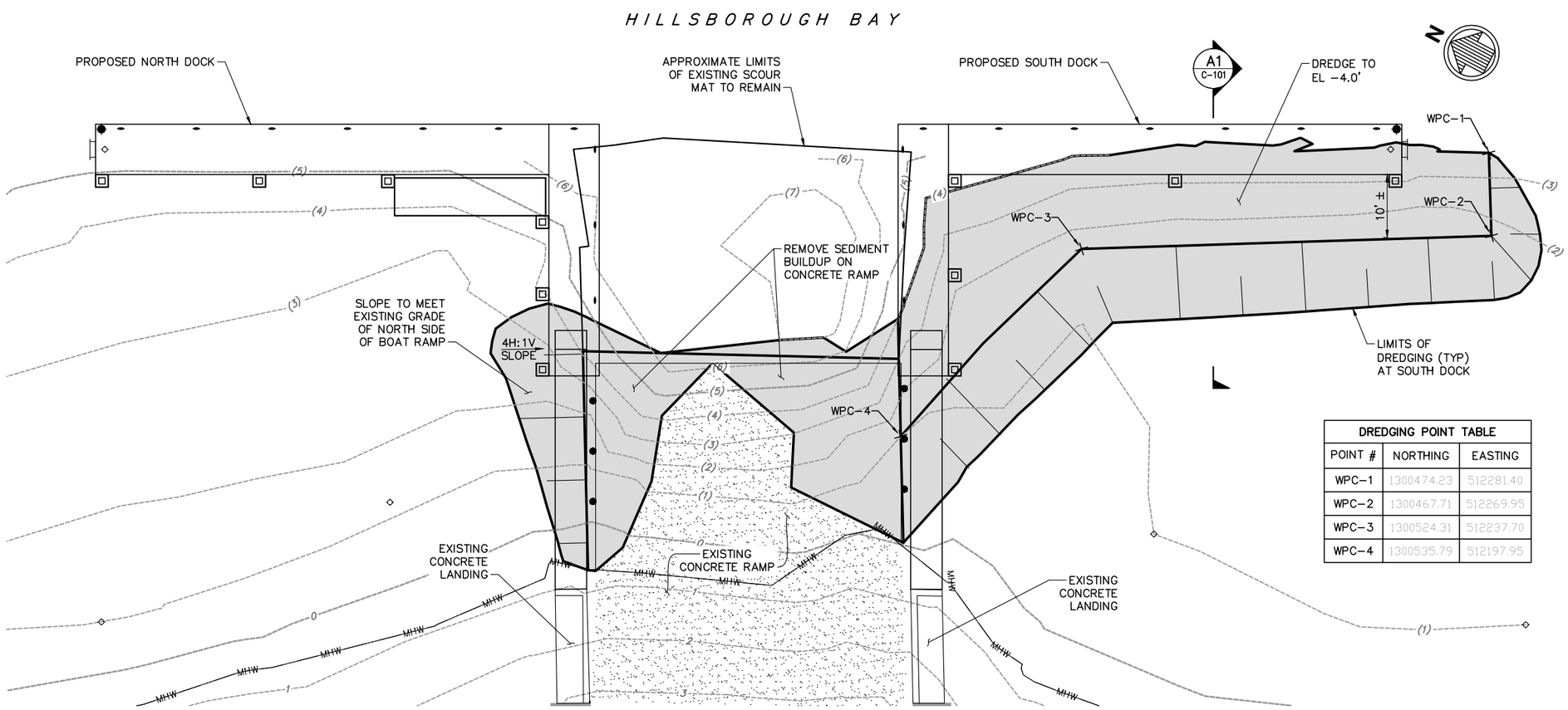

DREDGING POINT TABLE		
POINT #	NORTHING	EASTING
WPC−1	1300474.23	512281.40
WPC−2	1300467.71	512269.95
WPC−3	1300524.31	512237.70
WPC−4	1300535.79	512197.95

B1 C-101 PLAN – DREDGING
SCALE: 1"=10'

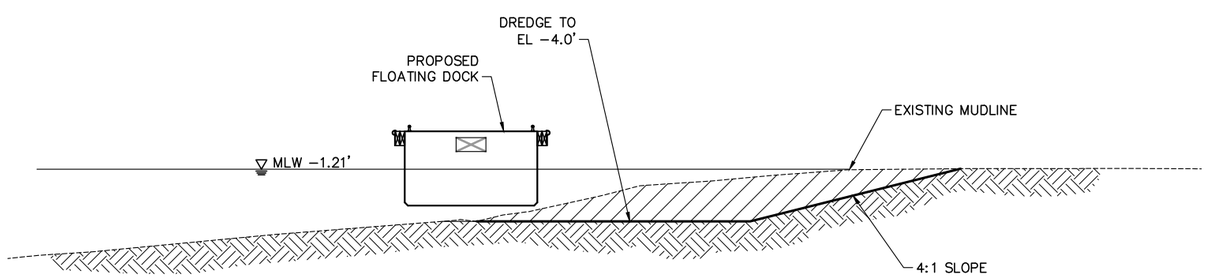

A1 C-101 SECTION – DREDGING
SCALE: 1/4"=1'−0"

NOTES

1. OVER DEPTH ALLOWANCE OF 1FT.
2. DREDGING SHALL BE COORDINATED WITH THE DEMOLITION OF EXISTING STRUCTURES AND NEW WORK.
3. CONTRACTOR SHALL PROPERLY DISPOSE OF DREDGE MATERIAL AT AN OFFSITE DISPOSAL LOCATION – SEE G-002 FOR ADDITIONAL INFO.
4. CONTRACTOR SHALL MAINTAIN WATER QUALITY DURING DREDGING – SEE G-002 FOR ENVIRONMENTAL MEASURES.

LEGEND

--- (2) -- EXISTING CONTOUR

DREDGING/SEDIMENT TO BE REMOVED

4' 0'-0" 4' 8'
SCALE: 1/4"=1'-0"

10' 0'-0" 10' 20'
SCALE: 1"=10'

100% SUBMITTAL
SEPTEMBER 13, 2018

CITY OF TAMPA FLORIDA ORGANIZED JULY 15 1887

Mark	Description	Date	Appr.

DAVIS ISLANDS BOAT RAMP DOCK IMPROVEMENTS

DREDGING PLAN AND SECTION

Designed by: IWC
Dwn by: JMJ
Cad by: IWC
Reviewed by: GWS
Submitted by: ISAAC CANNER, P.E. MOFFATT & NICHOL
Date: 2018-09-13
Rev. –
M&M Project No. 9678-01
Drawing code:
Drawing Scale:
Plot scale: 1:1 (D SHEET)

501 E. KENNEDY BLVD., SUITE 1910
TAMPA, FLORIDA 33602
(813) 258-3818
moffatt & nichol

SEAL

Sheet Reference No.
C-101
INDEX: 8 OF 14

File: Q:\TA\9678-01\cadd_Active_davis Island\967801-DI_C-101; Plotted: 10/31/2018 3:58 PM by SMITH, ANTHONY R.; Saved: 9/12/2018 11:35 AM by JJORDAN

DRAWING SCALES SHOWN BASED ON 22"x34" DRAWING

DESIGN CRITERIA

LOADING: SEE SPECIFICATIONS FOR ADDITIONAL DESIGN CRITERIA.

1. DESIGN VESSEL: 40 FEET.

2. LIVE LOAD:
   A. FLOATING DOCK & GANGWAYS
      i. UNIFORM LIVE LOAD.....50 PSF
      ii. CONCENTRATED LIVE LOAD.....400 LBS
      iii. HAND RAILS.....AS REQ'D PER FL BUILDING CODE

3. BERTHING LOAD:
   A. APPROACH SPEED.....3.0 FT/S
   B. APPROACH ANGLE.....30 DEG

4. WIND LOAD:
   A. DOCK (UNOCCUPIED).....140 MPH (1–MIN AVERAGE)
   B. DOCKS (OCCUPIED).....50 MPH (3–SEC GUST)
   C. GANGWAYS.....20 PSF ON PROFILE AREA

5. CURRENT LOAD: 1.0 FT/S

6. WAVE LOAD:
   A. SIGNIFICANT WAVE HEIGHT (Hs): 2.0 FT
   B. WAVE PERIOD: 1.5s TO 2.5s

DESIGN CODES AND STANDARDS

1. FLORIDA BUILDING CODE (2017).

2. AMERICAN CONCRETE INSTITUTE – BUILDING CODE REQUIREMENTS FOR STRUCTURAL CONCRETE (ACI 318–14).

3. AMERICAN INSTITUTE OF STEEL CONSTRUCTION MANUAL, 14TH EDITION.

4. AMERICAN WELDING SOCIETY STRUCTURAL WELDING CODE (AWS D1.1 – 2010).

5. AMERICAN SOCIETY OF CIVIL ENGINEERS – MINIMUM DESIGN LOADS FOR BUILDINGS AND OTHER STRUCTURES (ASCE 7–10).

6. FDOT 2017 ROAD & BRIDGE STANDARD SPECIFICATIONS.

7. AMERICAN SOCIETY OF CIVIL ENGINEERS – MANUAL 50 PLANNING AND DESIGN GUIDELINES FOR SMALL CRAFT HARBORS (2012)

CONCRETE & REINFORCING STEEL

1. ALL CONCRETE MATERIALS, REINFORCEMENT, AND CONSTRUCTION SHALL BE IN ACCORDANCE WITH FDOT SPECIFICATION 346, 400, AND 415 UNLESS OTHERWISE NOTED.

2. ALL CONCRETE SHALL BE A NORMAL WEIGHT CONCRETE (145 pcf).

3. ALL DETAILING, FABRICATION, AND ERECTION OF REINFORCING STEEL SHALL CONFORM TO THE ACI MANUAL OF STANDARD PRACTICE FOR DETAILING REINFORCED CONCRETE STRUCTURES, ACI 315 AND ACI 301.

4. MATERIALS SHALL CONFORM TO THE FOLLOWING, UNLESS OTHERWISE NOTED:
   A. CAST–IN–PLACE CONCRETE .....5,500 PSI (MIN, FDOT CLASS IV)
   B. PRECAST/PRESTRESSED CONCRETE.....6,000 PSI AT 28 DAYS
      4,000 PSI AT TIME OF TRANSFER
   C. REINFORCING STEEL .....ASTM A615, GRADE 60
   D. PRESTRESSING STEEL.....ASTM A416, GRADE 270
   E. SPIRALS.....ASTM A82

5. CONCRETE SHALL CONTAIN CORROSION INHIBITING ADMIXTURE, EUCON CIA OR APPROVED EQUAL.

6. AGGREGATE SHALL CONFORM TO ASTM C 33, NO, 57.

7. PROVIDE BROOM FINISH FOR ALL WALKING SURFACES.

8. MINIMUM CONCRETE CLEAR COVER FOR REINFORCEMENT, 3" UON.

9. PROVIDE 3/4" CHAMFERS ON ALL EXPOSED EDGES AND CORNERS, UON.

10. ALL CEMENT SHALL CONFORM TO ASTM C 150, TYPE II FOR AN EXTREMELY AGGRESSIVE ENVIRONMENT, WITH SLAG OR FLY ASH. MAXIMUM W/C RATIO IS 0.41.

11. CURE PLACED CONCRETE IN ACCORDANCE WITH FDOT SPECIFICATION 400–16.1.

12. CONTRACTOR SHALL REPAIR ALL SURFACE BLEMISHES IN CONCRETE WITHIN 24 HOURS AFTER FORM REMOVAL.

13. ALL CONCRETE WORK, PLACEMENT MEANS, AND METHODS SHALL BE IN ACCORDANCE WITH ACI 304–10, 308–01, 308.1–11 & 347R–03.

14. ALL DETAILING, FABRICATION, AND ERECTION OF REINFORCING STEEL SHALL CONFORM TO THE ACI MANUAL OF STANDARD PRACTICE FOR DETAILING REINFORCED CONCRETE STRUCTURES, ACI 315–99, REINFORCING STEEL SHOP DRAWINGS SHALL BE SUBMITTED AND APPROVED PRIOR TO USE IN CONSTRUCTION.

15. ALL DIMENSIONS PERTAINING TO LOCATION OF REINFORCING ARE CENTER TO CENTER LINE OF BARS EXCEPT WHERE THE CLEAR DIMENSION IS SHOWN TO FACE OF CONCRETE.

16. METAL CHAIRS ARE NOT ALLOWED AND NO METAL SHALL PROTRUDE FROM SURFACE OF THE CONCRETE.

17. CURE CONCRETE USING CONTINUOUS MOISTURE AND/OR MEMBRANE CURING COMPOUND IN ACCORDANCE WITH FDOT SPECIFICATION 400–16.1 AND 400–16.2.

18. EPOXY BONDING COMPOUND SHALL BE IN ACCORDANCE WITH FDOT SECTION 926 AND 937.

19. FOR MECHANICAL REINFORCING BAR CONNECTORS, PROVIDE 125% MINIMUM YIELD STRENGTH OF THE REINFORCEMENT BAR. COAT CONNECTORS IN ACCORDANCE WITH THE SAME REQUIREMENTS AS REINFORCING BARS.

20. LAP SPLICES SHALL BE MINIMUM CLASS "B" LAP SPLICES IN ACCORDANCE WITH ACI 318.

PRESTRESSED CONCRETE GUIDE PILES

1. CONCRETE FOR PRESTRESSED PILES SHALL BE FDOT CLASS V (SPECIAL). SEE "CONCRETE AND REINFORCING STEEL" NOTES ON THIS SHEET FOR ADDITIONAL INFORMATION.

2. PILES SHALL BE MANUFACTURED BY AN APPROVED FACILITY IN ACCORDANCE WITH FDOT SPECIFICATIONS.

3. SPLICING OF PILES WILL NOT BE PERMITTED.

4. THE PILE CAPACITY AND MINIMUM TIP ELEVATION SHALL BE DETERMINED BY THE FLOATING DOCK DESIGNER, SEE SPECIFICATIONS. CONTRACTOR SHALL IMMEDIATELY NOTIFY THE ENGINEER OF ANY PILES THAT DO NOT REACH THE REQUIRED PILE TIP ELEVATION.

TIMBER FENDER PILES AND SIGN PILES

1. ALL TIMBER CONSTRUCTION SHALL CONFORM TO THE RECOMMENDATIONS OF THE AMERICAN INSTITUTE OF TIMBER CONSTRUCTION.

2. TIMBER PILES SHALL BE TREATED IN ACCORDANCE WITH FDOT STANDARD SPECIFICATION 955 "TIMBER TREATMENT" FOR TIMBER IN SALTWATER IMMERSION AND IN ACCORDANCE WITH THE SPECIFICATIONS.

3. TIMBER PILES SHALL BE WRAPPED WITH HDPE OR PVC BLACK PILE WRAP WITH A MINIMUM OF 6 INCHES OVERLAP. PILE WRAP SHALL EXTEND FROM 1 FOOT ABOVE MHHW TO A MINIMUM OF 2 FEET BELOW THE MUDLINE. INSTALL USING 1–1/2 INCH STAINLESS STEEL SPIRAL SHANK ROOFING NAILS SPACED AT 2 INCHES ON–CENTER ALONG SEAM.

4. UPON REACHING FULL EMBEDMENT, TIMBER PILE SHALL BE CUT TO FINAL TOP ELEVATION AND CAPPED.

PILE DRIVING REQUIREMENTS

1. IT IS THE RESPONSIBILITY OF THE CONTRACTOR TO GATHER ADDITIONAL SOIL INFORMATION AS NECESSARY TO INSTALL THE PILES TO MEET THE LOAD REQUIREMENTS.

2. THE CONTRACTOR'S GEOTECHNICAL CONSULTANT WILL DEVELOP THE CORRELATION BETWEEN PILE DRIVING RESISTANCE, PILE LENGTH AND PILE CAPACITY FOR THE SELECTED PILE DRIVING SYSTEM.

3. CONTRACTOR SHALL COORDINATE PILE DRIVING SCHEDULE SO AS TO NOT INTERFERE WITH OR BE DETRIMENTAL TO THE CONCRETE PLACEMENT AND CURING OPERATIONS.

4. DRIVE PRESTRESSED CONCRETE PILING IN ACCORDANCE WITH FDOT SPECIFICATIONS 455–7.

5. TIMBER PILES SHALL BE DRIVEN TO THE TIP ELEVATION INDICATED ON THE DRAWINGS, USING A HAMMER OF AN APPROVED TYPE, WITH A CAPACITY AT LEAST EQUAL TO THE HAMMER MANUFACTURER'S RECOMMENDATION FOR THE TOTAL WEIGHT OF PILE AND THE CHARACTER OF THE SUBSURFACE MATERIAL TO BE ENCOUNTERED.

INSTALLATION OF DRILLED DOWELS

1. DOWEL EMBEDMENT AND HOLE DIAMETER SHALL BE PER MANUFACTURER'S RECOMMENDATIONS TO DEVELOP 150% OF THE DOWEL OR ANCHOR BOLT TENSILE CAPACITY.

2. FOLLOW EPOXY MANUFACTURER'S RECOMMENDATIONS FOR THE INSTALLATION.

3. DRILLED HOLES SHALL HAVE ROUGHENED INTERIOR SURFACE AS PER MANUFACTURER'S RECOMMENDATIONS.

4. CONTRACTOR SHALL LOCATE REINFORCEMENT PRIOR TO DRILLING HOLES, SO AS NOT TO DAMAGE THE REINFORCING STEEL.

5. THE CONTRACTOR SHALL PREPARE A TEMPLATE AND DRILL REQUIRED HOLES.

6. VACUUM DUST FROM BOTTOM AND SIDES OF HOLE USING A NOZZLE OF SMALL TUBING THAT WILL REACH THE BOTTOM OF THE HOLE. INSPECT ALL HOLES WITH A LIGHT TO MAKE CERTAIN ALL DUST IS REMOVED.

7. CONTRACTOR SHALL USE A CARBIDE TIP DRILL. PERCUSSION ROCK DRILL SHALL NOT BE PERMITTED.

8. CONTRACTOR SHALL FOLLOW MANUFACTURER'S RECOMMENDATIONS FOR THE MIXING AND APPLICATION OF EPOXY.

9. CONTRACTOR SHALL SUBMIT MANUFACTURER'S DATA SHEET AND RECOMMENDATIONS FOR APPROVAL. EPOXY GROUT SHALL CONFORM TO ASTM C 881. EPOXY SHALL BE TWO COMPONENT, 100% SOLID (CONTAINING NO SOLVENTS), NON–SAG PASTE, INSENSITIVE TO MOISTURE, UON.

CLEATS

1. 12 INCH CLEATS SHALL BE GALVANIZED IRON BOAT CLEATS WITH STAINLESS STEEL BOLTS AS INDICATED.

100% SUBMITTAL
SEPTEMBER 13, 2018

CITY OF TAMPA FLORIDA ORGANIZED JULY 15, 1887

Mark	Description	Date	Appr.

DAVIS ISLANDS BOAT RAMP DOCK IMPROVEMENTS

STRUCTURAL NOTES

moffatt & nichol
501 E. KENNEDY BLVD., SUITE 1910
TAMPA, FLORIDA 33602
(813) 258-8818

Designed by: IWC		Date: 2018–09–13	Rev. –
Dwn by: JMJ	Ckd by: IWC	M&N Project No. 9678–01	
Reviewed by: GWS		Drawing code:	
Submitted by: ISAAC CANNER, P.E. MOFFATT & NICHOL		Drawing Scale: Plot scale: 1:1 (0 SHEET)	

SEAL

Sheet Reference No.
S-001
INDEX: 9 OF 14

File: Q:\TA\9678–01\cadd_Active_davis island\967801–01_S–001; Plotted: 10/31/2018 3:59 PM by SMITH, ANTHONY R.; Saved: 9/7/2018 4:46 PM by JJORDAN

DRAWING SCALES SHOWN BASED ON 22"x34" DRAWING

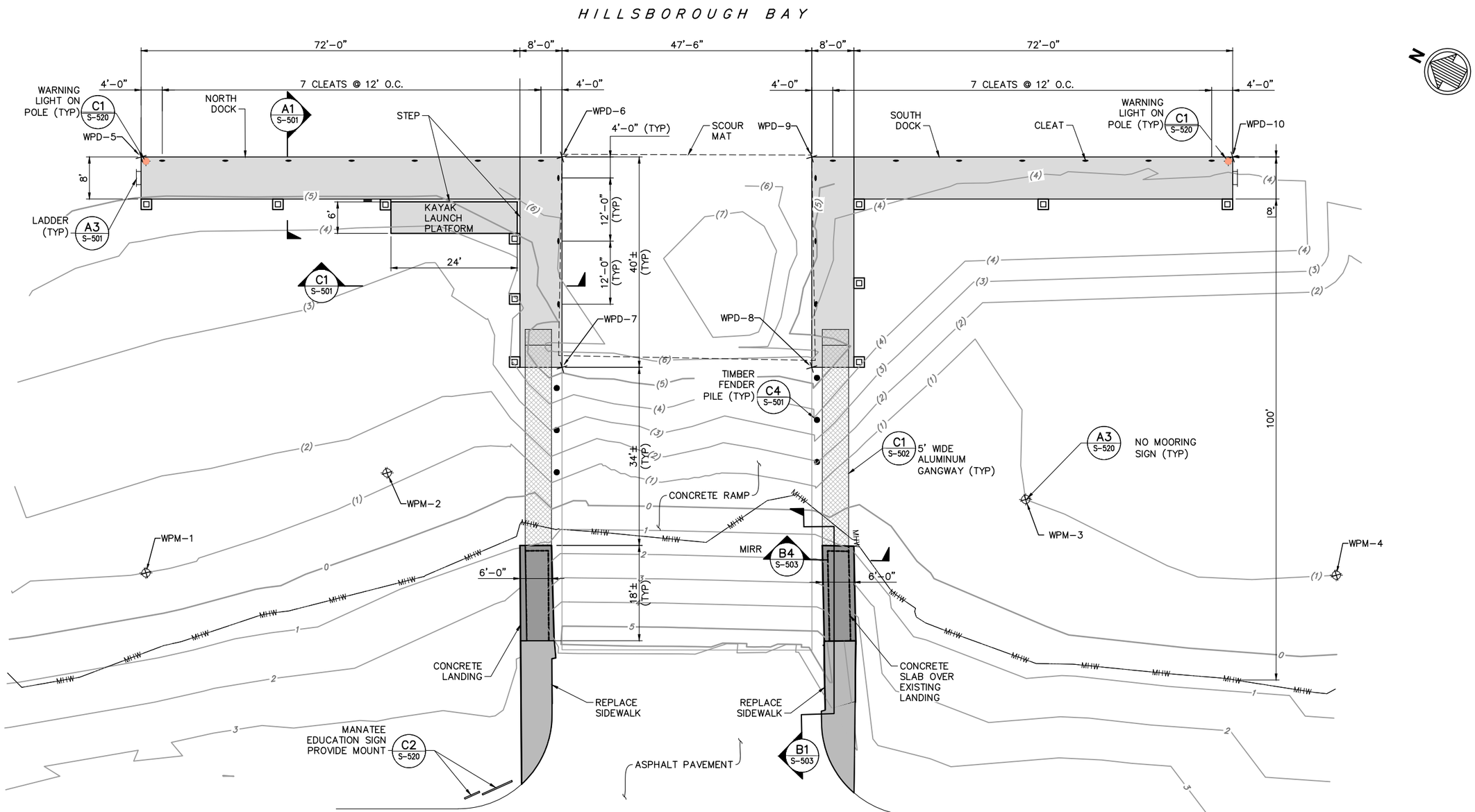

A1 S-101 DOCK LAYOUT PLAN
SCALE: 1" = 10'-0"

MOORING POINT TABLE		
POINT #	NORTHING	EASTING
WPM-1	1300634.2910	512112.5800
WPM-2	1300602.6411	512150.8026
WPM-3	1300492.9745	512202.9981
WPM-4	1300434.0424	512217.8337

DOCK POINT TABLE		
POINT #	NORTHING	EASTING
WPD-5	1300672.0386	512182.0884
WPD-6	1300601.2981	512219.4485
WPD-7	1300582.6180	512184.0782
WPD-8	1300540.6511	512206.2421
WPD-9	1300559.3311	512241.6123
WPD-10	1300488.5906	512278.9724

LEGEND

- (3) EXISTING CONTOUR
- SIDEWALK
- GANGWAY
- NO MOORING SIGN
- CONCRETE LANDING
- FLOATING DOCK
- GUIDE PILE

10' 0'-0" 10' 20'
SCALE: 1"=10'

100% SUBMITTAL
SEPTEMBER 13, 2018

CITY OF TAMPA FLORIDA ORGANIZED JULY 15 1887

Mark	Description	Date	Appr.

DAVIS ISLANDS BOAT RAMP DOCK IMPROVEMENTS

DOCK LAYOUT PLAN

Designed by: IWC
Dwn by: JMJ
Cad by: IWC
Reviewed by: GWS
Submitted by: ISAAC CANNER, P.E. MOFFATT & NICHOL
Date: 2018-09-13
M&N Project No. 9678-01
Drawing code:
Drawing Scale:
Plot scale: 1:1 (0 SHEET)
Rev. -

501 E. KENNEDY BLVD., SUITE 1910
TAMPA, FLORIDA 33602
(813) 236-9818
moffatt & nichol

SEAL

Sheet Reference No.
S-101
INDEX: 10 OF 14

File: Q:\TA\9678-01\cadd_Active_davis island\967801-DI_S-101; Plotted: 10/31/2018 3:59 PM by SMITH, ANTHONY R.; Saved: 9/12/2018 1:49 PM by JJORDAN

DRAWING SCALES SHOWN BASED ON 22"x34" DRAWING

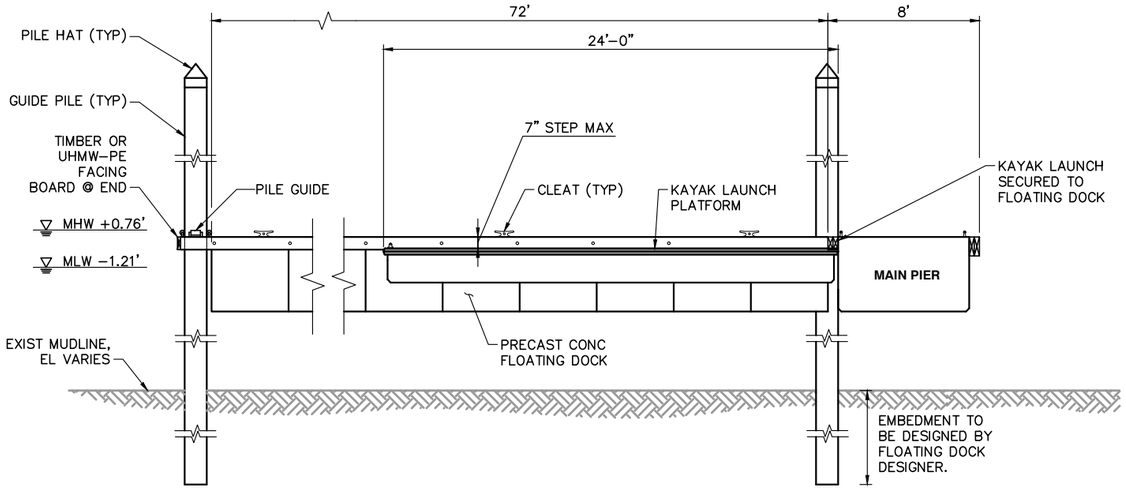

C1 / S-101 ELEVATION – FLOATING DOCK
SCALE: 1/4"=1'-0"

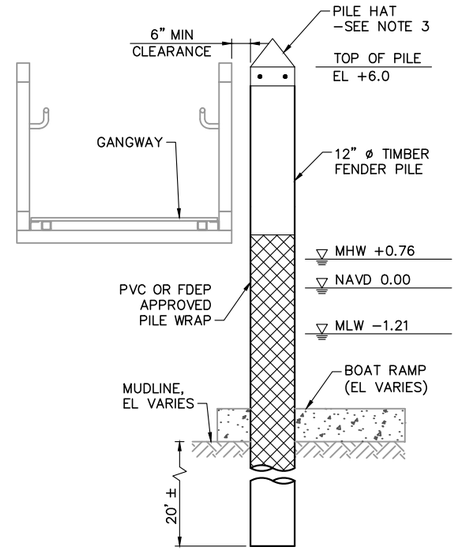

C4 / S-101 DETAIL – FENDER PILE
SCALE: 1/2"=1'-0"

NOTES

1. MAINTAIN MINIMUM CLEAR DISTANCE BETWEEN GANGWAY & GUIDE PILE.
2. CORE DRILL 12" ø HOLE THROUGH BOAT RAMP AS NECESSARY TO INSTALL TIMBER PILE.
3. FASTEN PILE HAT WITH (4) SS SCREWS AND FLAT WASHERS.

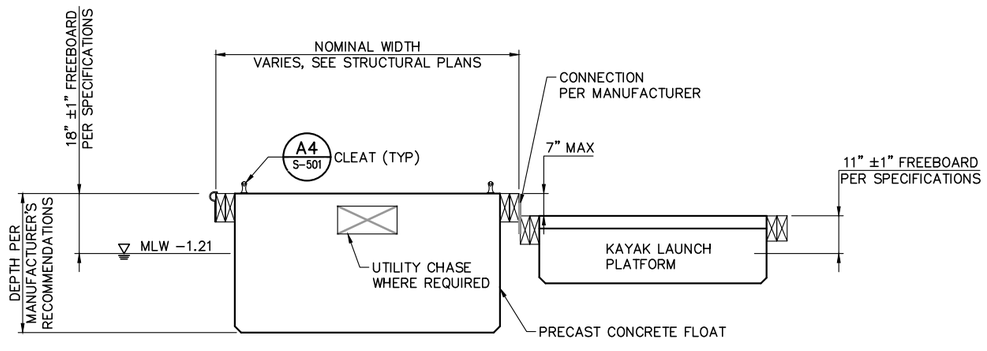

A1 / S-101 SECTION – FLOATING DOCK
SCALE: 1/2"=1'-0"

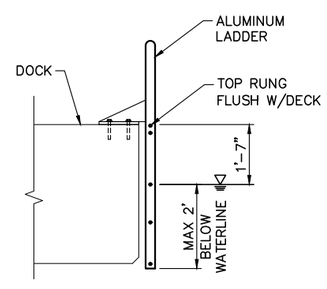

A3 / S-101 DETAIL – LADDER
SCALE: 1/2"=1'-0"

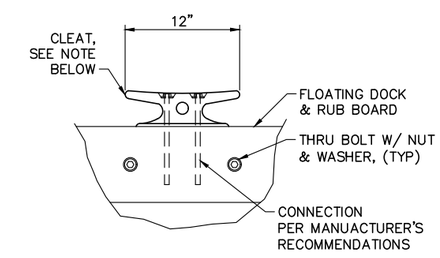

1. MOUNT CLEAT ON DOCK OR WALER PER MANUFACTURER'S RECOMMENDATIONS.

A4 / S-501 DETAIL – CLEAT
SCALE: 1 1/2"=1'-0"

1'-0" 0'-0" 6" 1'-0"
SCALE: 1 1/2"=1'-0"

4'-0" 0'-0" 4'-0" 8'-0"
SCALE: 1/4"=1'-0"

2'-0" 0'-0" 2'-0" 4'-0"
SCALE: 1/2"=1'-0"

100% SUBMITTAL
SEPTEMBER 13, 2018

CITY OF TAMPA FLORIDA ORGANIZED JULY 15 1887

Mark	Description	Date	Appr.

DAVIS ISLANDS BOAT RAMP DOCK IMPROVEMENTS

FLOATING DOCK DETAILS

Rev. –
Date: 2018-09-13
M&N Project No. 9678-01
Designed by: IWC
Dwn by: JMJ
Ckd by: IWC
Drawing code:
Reviewed by: GWS
Submitted by: ISAAC CANNER, P.E. MOFFATT & NICHOL
Drawing Scale:
Plot scale: 1:1 (D SHEET)

moffatt & nichol
501 E. KENNEDY BLVD., SUITE 1910
TAMPA, FLORIDA 33602
(813) 236-6818

SEAL

Sheet Reference No.
S-501
INDEX: 11 OF 14

File: Q:\TA\9678-01\cadd_Active_davis island\967801-DI_S-501; Plotted: 10/31/2018 3:59 PM by SMITH, ANTHONY R.; Saved: 9/12/2018 11:53 AM by JJORDAN

DRAWING SCALES SHOWN BASED ON 22"x34" DRAWING

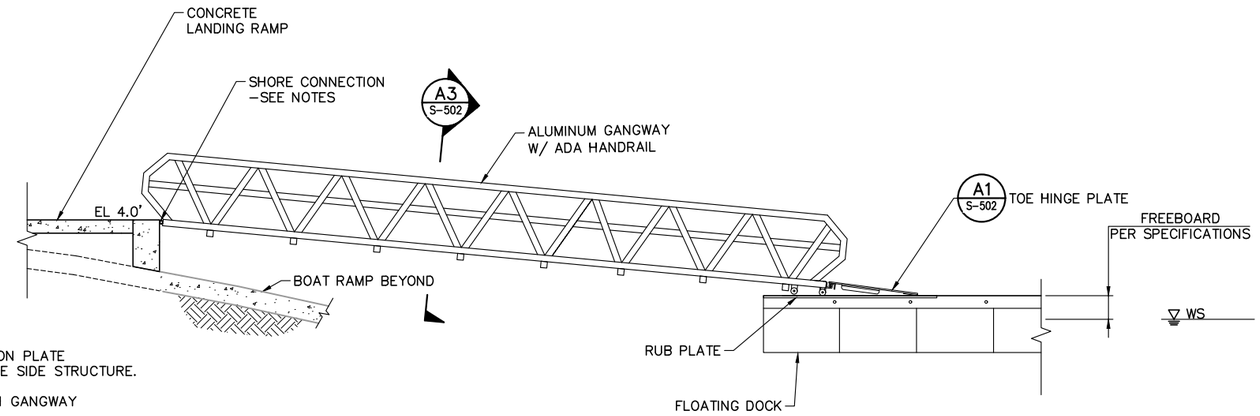

NOTES

1. SHORE CONNECTION SHALL INCLUDE TRANSITION PLATE SPANNING FROM THE GANGWAY TO THE SHORE SIDE STRUCTURE.
2. SHORE CONNECTION SHALL BE INCLUDED WITH GANGWAY SUBMITTAL FOR APPROVAL.
3. SHORE CONNECTION SHALL BE DESIGNED TO MEET PERFORMANCE CRITERIA IN SPECIFICATION INCLUDING BUT NOT LIMITED TO CHANGES IN WATER LEVEL, LIVE LOAD, AND WEIGHT OF GANGWAY.

C1 S-101 ELEVATION – GANGWAY
SCALE: 1/4"=1'-0"

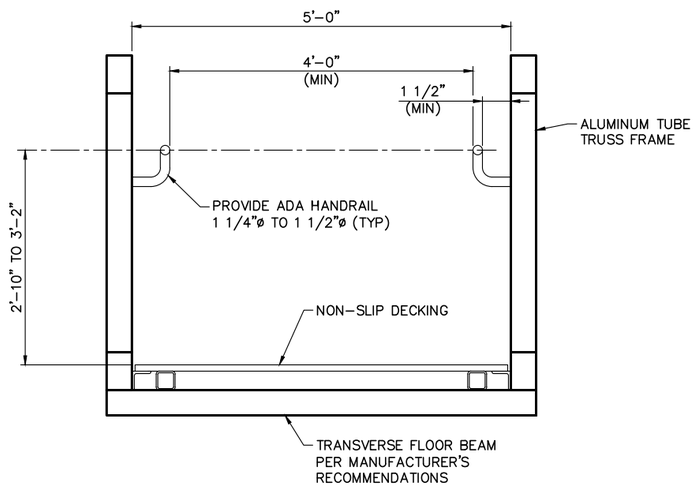

A3 S-502 SECTION – ALUMINUM GANGWAY
SCALE: 1"=1'-0"

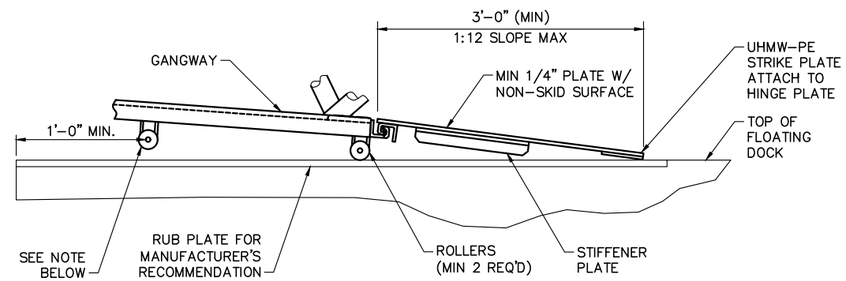

NOTE: CONTRACTOR SHALL PROVIDE A SECONDARY ROLLER/SUPPORT TO ACCOMMODATE HIGH WATER EVENTS.

A1 S-502 DETAIL – TOE HINGE PLATE
SCALE: 3/4"=1'-0"

2'-0" 0'-0" 1'-0" 2'-0"
SCALE: 3/4"=1'-0"

4'-0" 0'-0" 4'-0" 8'-0"
SCALE: 1/4"=1'-0"

1'-0" 0'-0" 1'-0" 2'-0"
SCALE: 1"=1'-0"

100% SUBMITTAL
SEPTEMBER 13, 2018

Mark	Description	Date	Appr.

CITY OF TAMPA FLORIDA ORGANIZED JULY 15 1887

DAVIS ISLANDS BOAT RAMP DOCK IMPROVEMENTS

GANGWAY DETAILS

Designed by: IWC
Dwn by: JMJ
Cad by: IWC
Reviewed by: GWS
Submitted by: ISAAC CANNER, P.E. MOFFATT & NICHOL
Date: 2018-09-13
Rev. -
M&N Project No. 9678-01
Drawing code:
Drawing Scale:
Plot scale: 1:1 (0 SHEET)

moffatt & nichol
501 E. KENNEDY BLVD., SUITE 1910
TAMPA, FLORIDA 33602
(813) 226-9818

SEAL

Sheet Reference No.
S-502
INDEX: 12 OF 14

File: Q:\TA\9678-01\cadd_Active_davis island\967801-DI_S-502; Plotted: 10/31/2018 3:59 PM by SMITH, ANTHONY R.; Saved: 9/12/2018 12:08 PM by JJORDAN

DRAWING SCALES SHOWN BASED ON 22"x34" DRAWING

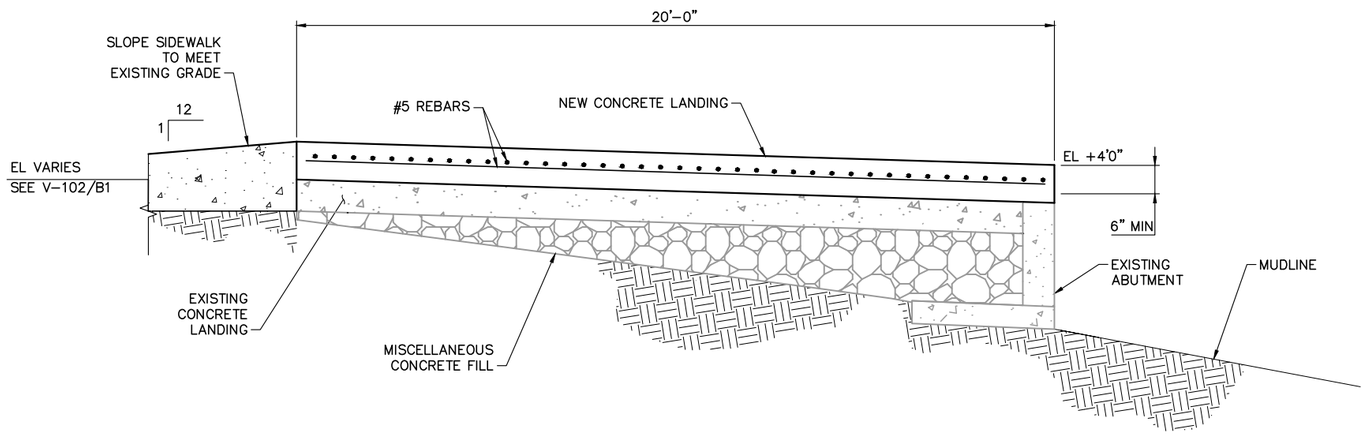

B1 / S-101 LANDING ELEVATION
SCALE: 1/2" = 1'–0"

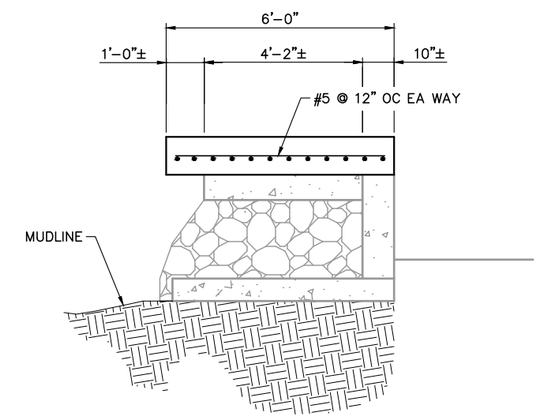

B4 / S-101 LANDING SECTION
SCALE: 1/2" = 1'–0"

NOTES

1. WHEN CASTING NEW CONCRETE, ROUGHEN SURFACE OF EXISTING CONCRETE TO AMPLITUDE OF 1/4 INCH MIN.
2. REMOVE AND GRIND SURFACE OF RIPRAP THAT INTERFERES WITH CONSTRUCTION OF NEW ACCESS SLAB.

2'–0" 0'–0" 2'–0" 4'–0"
SCALE: 1/2"=1'–0"

100% SUBMITTAL
SEPTEMBER 13, 2018

Mark	Description	Date	Appr.

CITY OF TAMPA FLORIDA ORGANIZED JULY 15 1887

DAVIS ISLANDS BOAT RAMP DOCK IMPROVEMENTS

LANDING DETAILS

Date: 2018-09-13
Rev. –
M&N Project No. 9678-01
Drawing code:
Drawing Scale: Plot scale: 1:1 (D SHEET)

Designed by: IWC
Cad by: IWC
Dwn by: JMJ
Reviewed by: GWS
Submitted by: ISAAC CANNER, P.E. MOFFATT & NICHOL

moffatt & nichol
501 E. KENNEDY BLVD., SUITE 1910
TAMPA, FLORIDA 33602
(813) 226-9818

SEAL

Sheet Reference No.
S-503
INDEX: 13 OF 14

File: Q:\TA\9678-01\cadd_Active_davis island\967801-DI_S-503; Plotted: 10/31/2018 3:59 PM by SMITH, ANTHONY R.; Saved: 9/12/2018 12:08 PM by JJORDAN

DRAWING SCALES SHOWN BASED ON 22"x34" DRAWING

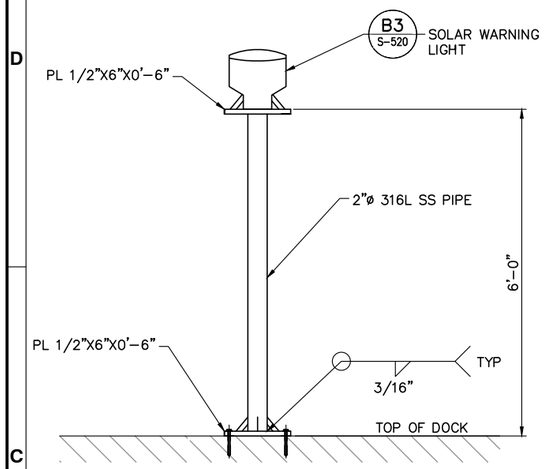

C1 S-101 WARNING LIGHT
SCALE: 3/4"=1'-0"

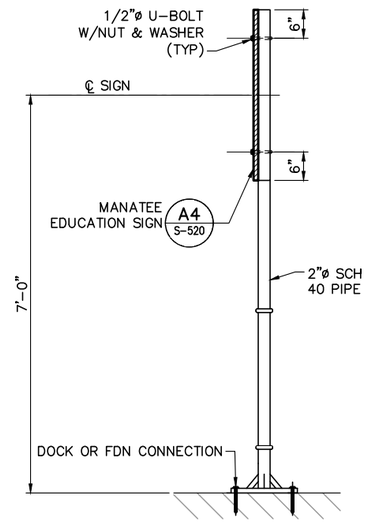

C2 S-101 DETAIL – SIGN MOUNTING
SCALE: 3/4"=1'-0"

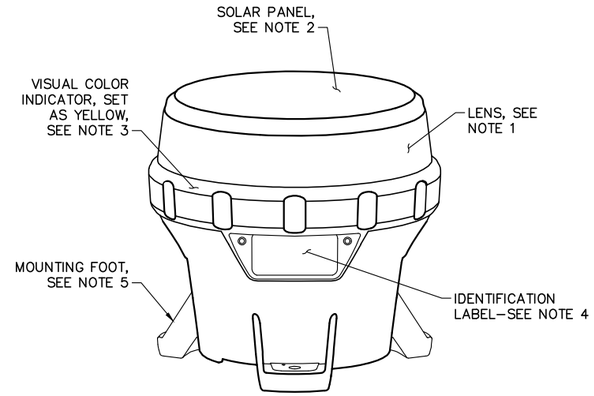

B3 S-520 DETAIL – SOLAR WARNING LIGHT
SCALE: NTS

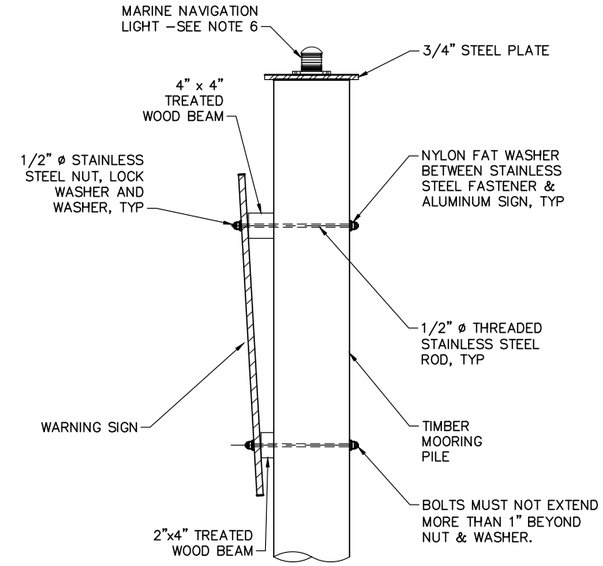

B4 S-520 DETAIL – WARNING SIGN
SCALE: NTS

SOLAR WARNING LIGHT NOTES

1. UV RESISTANT, POLYCARBONATE/POLYSOLAXANE CO–POLYMER BODY AND LENS MATERIAL. DOUBLE O–RING SEALING WITH WATERPROOF VENT. REPLACEABLE BATTERY PACK WITH STATUS FEEDBACK.
2. SOLAR PANEL WITH BYPASS BLOCKING DIODE FUNCTION AND MAXIMUM POWER POINT (MPPT).
3. LED LIGHT SOURCE WITH TEMPERTURE–CORRECTED LED DRIVERS. SELECTABLE FLASH PATTERNS. SELECTABLE INTENSITY FROM 25 TO 925 LUX. SELECTABLE COLOR TO BE YELLOW
4. LUMINAIRE SHALL BE MANUFACTURER CARMANAH MODEL: #M550 OR APPROVED EQUAL. –45 TO 124 FAHRENHEIT AMBIENT OPERATING TEMPERATURE. USCG PATON 33CFR66 & CFR67 CLASS C COMPLAINT.
5. SOLAR POWER NAVIGATIONAL SHALL BE INSTALLED AS SHOWN ON DRAWINGS. SECURE NAVIGATIONAL LIGHT WITH 316 STAINLESS STEEL HARDWARE. LOCATE LIGHT IN OPTIMUM LOCATION VISIBLE TO APPROACHING VESSELS, PROTECTED FROM ARTIFICIAL LIGHT SOURCES AND PROTECTION FROM POSSIBLE DAMAGE.

WARNING SIGN NOTES

1. ALL PILINGS MUST BE PRESSURE TREATED LUMBER (2.50 CCA FOR SALTWATER APPLICATIONS.
2. ALL FRAMING FOR SIGN BOARD MUST BE PRESSURE TREATED LUMBER (0.60 CCA, 0.60 ACQ, OR 0.60 ACZA FOR SALTWATER APPLICATIONS.
3. BOLT HOLES BORED 1/8" LARGER THAN DIAMETER OF BOLT. ALL FASTENERS MUST BE VANDAL PROOF.
4. THE CONTRACTOR SHALL NOT IMPACT THE MESSAGE AREA OR REFLECTIVE SURFACES OF THE SIGN WHEN DRILLING HOLES IN THE SIGNS, OR SPLIT THE ENDS OF THE CROSSING TIMBERS.
5. SIGN(S) MUST BE MOUNTED ON SINGLE PILE.
6. CARMANAH MODEL 501 MARINE NAVIGATION LIGHT OR APPROVED EQUAL WITH WHITE 4 SECOND FLASHING CHARACTERISTIC.

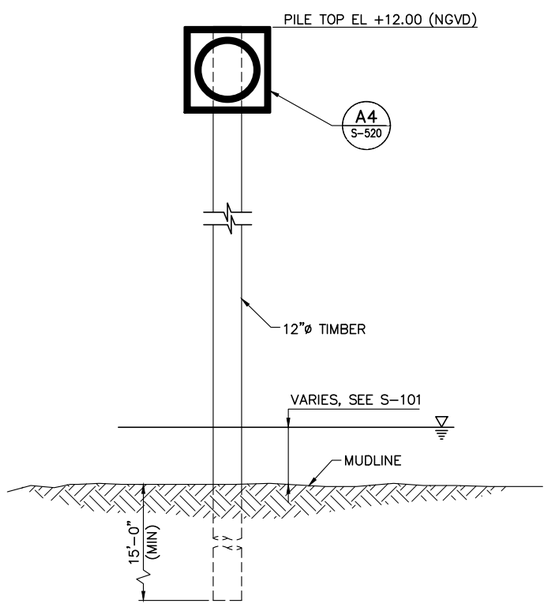

A1 S-101 NO MOORING SIGN
SCALE: 3/4" = 1'-0"

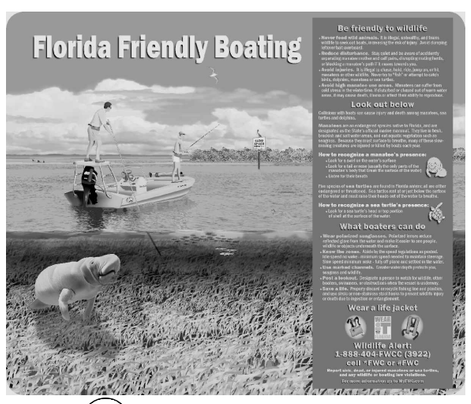

A2 S-101 MANATEE EDUCATION SIGN
SCALE: NTS
S-520

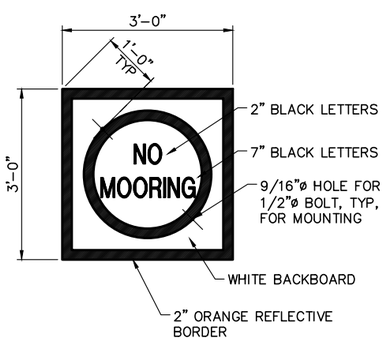

A4 S-520 NO MOORING SIGN
SCALE: NTS

2' 0'–0" 1' 2'
SCALE: 3/4"=1'–0"

100% SUBMITTAL
SEPTEMBER 13, 2018

DRAWING SCALES SHOWN BASED ON 22"x34" DRAWING

CITY OF TAMPA FLORIDA ORGANIZED JULY 15 1887

Mark	Description	Date	Appr.

DAVIS ISLANDS BOAT RAMP DOCK IMPROVEMENTS

AIDS TO NAVIGATION & SIGN DETAILS

Designed by: IWC
Dwn by: JMJ
Ckd by: IWC
Reviewed by: GWS
Submitted by: ISAAC CANNER, P.E. MOFFATT & NICHOL
Date: 2018-09-13
M&N Project No. 9678-01
Drawing code:
Drawing Scale:
Plot scale: 1:1 (D SHEET)
Rev. –

moffatt & nichol
501 E. KENNEDY BLVD., SUITE 1910
TAMPA, FLORIDA 33602
(813) 258-8818

SEAL

Sheet Reference No.
S-520
INDEX: 14 OF 14

File: C:\TA\9678-01\cadd_Active_davis island\967801-DI_S-520; Plotted: 10/31/2018 3:59 PM by SMITH, ANTHONY R.; Saved: 9/12/2018 3:36 PM by JJORDAN

LOWRY PARK
DOCK AND BOARDWALK IMPROVEMENTS
SECTION 25, TOWNSHIP 28S, RANGE 18E
TAMPA, FLORIDA

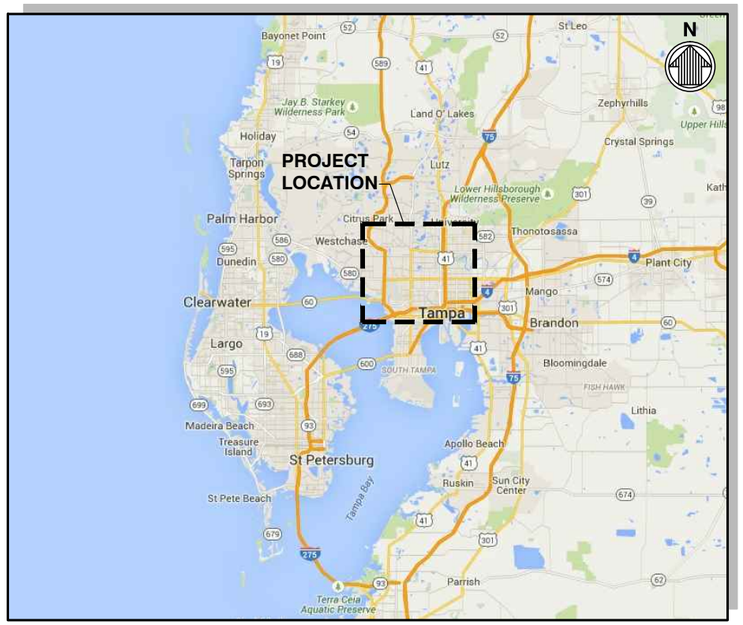

VICINITY MAP
NTS

INDEX OF DRAWINGS		
INDEX NO.	SHEET NO.	DRAWING TITLE
1	G–001	COVER SHEET AND INDEX OF DRAWINGS
2	G–002	ABBREVIATIONS, LEGEND AND GENERAL NOTES
3	G–003	GENERAL NOTES
4	V–100	SITE PLAN
5	V–101	EXISTING CONDITIONS AND DEMOLITION PLAN (1 OF 2)
6	V–102	EXISTING CONDITIONS AND DEMOLITION PLAN (2 OF 2)
7	V–301	SOUTH DOCK ELEVATIONS
8	V–302	EXISTING DOCK DEMOLITION SECTIONS
9	S–001	STRUCTURAL NOTES
10	S–100	NORTH AND SOUTH DOCK LAYOUT PLAN
11	S–101	NORTH AND SOUTH DOCK GEOMETRY PLAN
12	S–102	ENLARGED FRAMING PLAN SOUTH DOCK
13	S–103	ENLARGED FRAMING PLAN NORTH DOCK (1 OF 2)
14	S–104	ENLARGED FRAMING PLAN NORTH DOCK (2 OF 2)
15	S–105	ENLARGED PLAN FLOATING DOCK
16	S–110	BOARDWALK LAYOUT PLAN
17	S–111	BOARDWALK GEOMETRY PLAN
18	S–112	ENLARGED PLAN BOARDWALK (1 OF 4)
19	S–113	ENLARGED PLAN BOARDWALK (2 OF 4)
20	S–114	ENLARGED PLAN BOARDWALK (3 OF 4)
21	S–115	ENLARGED PLAN BOARDWALK (4 OF 4)
22	S–120	BULKHEAD PLAN
23	S–401	SOUTH DOCK AND BULKHEAD SECTIONS
24	S–402	NORTH DOCK SECTIONS
25	S–403	FLOATING DOCK SECTION
26	S–404	BOARDWALK SECTIONS
27	S–501	BULKHEAD DETAILS
28	S–502	TIMBER BOARDWALK & DOCK DETAILS
29	S–503	TIMBER DOCK DETAILS
30	S–504	STRUCTURAL DETAILS
31	S–505	TIMBER HANDRAIL
32	S–506	MISCELLANEOUS DETAILS
33	S–520	AIDS TO NAVIGATION AND SIGN DETAILS

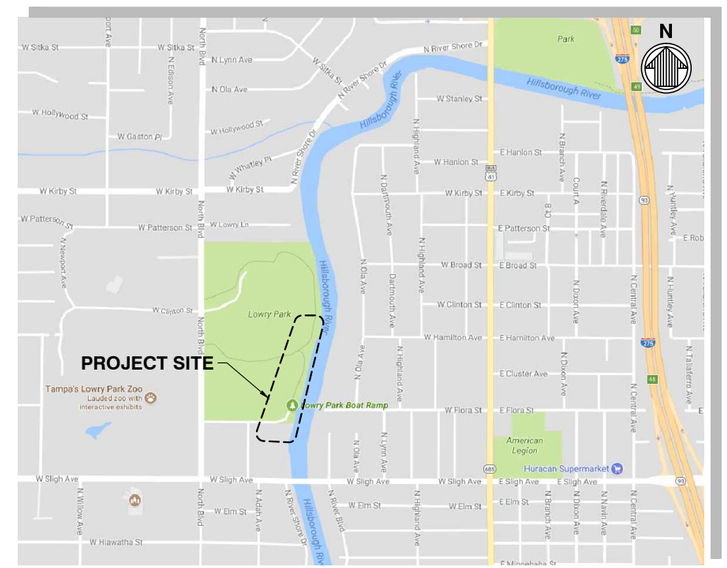

LOCATION MAP
NTS

PREPARED BY:

moffatt & nichol
501 EAST KENNEDY BLVD
SUITE 1910
TAMPA, FLORIDA 33602

PREPARED FOR:

CITY OF TAMPA
DEPARTMENT OF PUBLIC WORKS
306 E. JACKSON ST 4N
TAMPA, FLORIDA 33602
(813) 274–8773

100% SUBMITTAL
SEPTEMBER 13, 2018
NOT TO BE USED FOR CONSTRUCTION

Mark	Description	Date	Appr.

LOWRY PARK DOCK AND BOARDWALK IMPROVEMENTS

COVER SHEET AND INDEX OF DRAWINGS

Designed by: IWC
Dwn by: JAD
Ckd by: IWC
Reviewed by: DCM
Submitted by: MACPHERSON, DEBORAH MOFFATT & NICHOL
Date: 2018–05–18
Rev. –
M&N Project No. 9678–01
Drawing code:
Drawing Scale:
Plot scale: 1:1 (0 SHEET)

501 EAST KENNEDY BLVD
SUITE 1910
TAMPA, FLORIDA 33602

moffatt & nichol

SEAL

Sheet Reference No.
G-001
INDEX: 1 OF 33

File: Q:\TA\9678-01\cadd_Active_lowrypark\967801-LP_G-001; Plotted: 10/31/2018 4:01 PM by SMITH, ANTHONY R.; Saved: 10/31/2018 3:51 PM by ARSMITH

DRAWING SCALES SHOWN BASED ON 22"x34" DRAWING

GENERAL NOTES

1. NOTES BELOW ARE NOT INTENDED TO REPLACE SPECIFICATIONS. SEE SPECIFICATIONS FOR REQUIREMENTS IN ADDITION TO GENERAL NOTES.
2. ALL WORK SHALL CONFORM TO THE REQUIREMENTS OF THESE DRAWINGS, PROJECT SPECIFICATIONS, PROJECT NOTES AND FDOT STANDARD SPECIFICATIONS WHEN REFERENCED. FDOT STANDARD SPECIFICATIONS ARE REFERENCED FOR MATERIAL SPECIFICATIONS AND CONSTRUCTION METHODS UNDER DIVISION II "CONSTRUCTION DETAILS". DIVISION I "GENERAL REQUIREMENTS AND COVENANTS" OF THE FDOT STANDARD SPECIFICATIONS DOES NOT APPLY. THE CONTRACT WITH THE OWNER SHALL GOVERN OVER FDOT SPECIFICATIONS. MEANS OF MEASUREMENT AND PAYMENT SHALL BE AS STIPULATED BY THE OWNER AND THE CONTRACT. FDOT STANDARD SPECIFICATIONS REFER TO THE FLORIDA DEPARTMENT OF TRANSPORTATION "STANDARD SPECIFICATION FOR ROADWAY AND BRIDGE CONSTRUCTION", 2017 EDITION AND ALL SUPPLEMENTAL SPECIFICATIONS.
3. SITE VERIFICATION: PRIOR TO BEGINNING CONSTRUCTION THE CONTRACTOR SHALL CHECK THE DRAWINGS AGAINST THE SITE LOCATIONS AND NOTIFY THE ENGINEER IN WRITING OF ANY DISCREPANCIES IN DIMENSIONS OR SITE CONDITIONS. THE CONTRACTOR SHALL NOT BEGIN CONSTRUCTION IN ANY SUCH AFFECTED AREA UNTIL THE DISCREPANCY HAS BEEN RESOLVED BY THE CONTRACTOR AND APPROVED BY THE ENGINEER.
4. ALL SAFETY REGULATIONS ARE TO BE STRICTLY FOLLOWED.
5. METHODS OF CONSTRUCTION AND ERECTION OF STRUCTURAL MATERIAL ARE THE RESPONSIBILITY OF THE CONTRACTOR.
6. THE CONTRACTOR SHALL, ON A DAILY BASIS, REMOVE FROM THE SITE ANY EXCAVATED MATERIAL OR DEBRIS. DISPOSAL OF THE MATERIALS IS THE RESPONSIBILITY OF THE CONTRACTOR. ALL DEBRIS SHALL BE DISPOSED OF IN A PERMITTED SANITARY LANDFILL.
7. ALL DEMOLISHED MATERIAL SHALL BE REMOVED COMPLETELY AND WITHOUT DAMAGE TO ADJACENT ITEMS. ANY ITEM THAT CANNOT BE REMOVED COMPLETELY SHALL BE REMOVED TO A MINIMUM OF ONE FOOT BELOW GRADE.
8. THE CONTRACTOR IS RESPONSIBLE FOR REPAIRING, AT HIS OWN EXPENSE, ANY AND ALL DAMAGES THAT MAY OCCUR OUTSIDE AND WITHIN THE LIMITS OF THIS PROJECT AS A RESULT OF DEMOLITION/CONSTRUCTION.
9. THE CONTRACTOR SHALL PLACE CONSTRUCTION DEBRIS CONTROL DEVICES, BOOMS, TARPAULINS, FLOATS, STAGING, AND OTHER DEVICES AS NECESSARY TO PREVENT CONSTRUCTION DEBRIS FROM ENTERING THE WATER AND AIR BORNE MATERIALS FROM LEAVING THE IMMEDIATE VICINITY OF THE SITE. THE CONTRACTOR SHALL BE RESPONSIBLE FOR CLEAN-UP OF ANY MATERIALS DEPOSITED OUTSIDE THE WORK AREA OR IN THE WATER. SEE PERMIT CONDITIONS.
10. THE CONTRACTOR SHALL ABIDE BY ALL APPLICABLE LOCAL ENVIRONMENTAL PROTECTION STANDARDS, LAWS, AND REGULATIONS.
11. IF CONSTRUCTION IS EXPECTED TO BE PERFORMED FROM A BARGE. THE CONTRACTOR SHALL CONDUCT OPERATIONS SO AS TO NOT INTERFERE WITH OR BE DETRIMENTAL TO VESSEL AND VEHICULAR TRAFFIC DURING THE COURSE OF THE WORK AND SHALL PLAN FOR THE EFFECTS OF PASSING VESSELS.
12. CONTRACTOR SHALL LOCATE ALL UTILITIES IN THE AREA OF CONSTRUCTION PRIOR TO COMMENCING WITH CONSTRUCTION. CONTRACTOR SHALL NOTIFY THE ENGINEER OF ALL CONFLICTS WITH EXISTING UTILITIES PRIOR TO COMMENCING WITH WORK IN THE CONFLICT AREA.
13. CONTRACTOR SHALL PROVIDE AS-BUILT SURVEY AND DRAWINGS OF COMPLETED WORK TO THE ENGINEER.
14. ANY DAMAGE TO STATE, COUNTY, OR LOCAL ROADS CAUSED BY THE CONSTRUCTION ACTIVITIES RELATED TO THIS PROJECT SHALL BE REPAIRED BY THE CONTRACTOR TO THE SATISFACTION OF THE CITY.
15. THE CONTRACTOR IS RESPONSIBLE FOR ADHERING TO ALL PERMIT CONDITIONS AND REPORTING REQUIREMENTS.
16. UNLESS OTHERWISE NOTED, THE CONTRACTOR SHALL RESTORE DISTURBED AREAS TO ORIGINAL CONDITION TO MATCH ADJACENT GRADES AND SHALL REPLACE ANY DISTURBED PAVED OR GRASSED AREAS IN KIND.
17. THE CONTRACTOR IS SOLELY RESPONSIBLE FOR THE SAFETY, SECURITY AND PROTECTION OF PERSONNEL, EQUIPMENT, CONSTRUCTION, AND ADJACENT FACILITIES FOR THE DURATION OF THIS CONTRACT. THE CONTRACTOR AND HIS SUBCONTRACTORS SHALL PREPARE AND CONFORM TO A PROJECT SPECIFIC HEALTH AND SAFETY PLAN. THE HEALTH AND SAFETY PLAN SHALL INCLUDE APPLICABLE GUIDELINES AND REGULATIONS SET FORTH IN CURRENT O.S.H.A. AND FLORIDA STATUTES WITH SPECIFIC ATTENTION TO FLORIDA TRENCH SAFETY ACT AND O.S.H.A.'S TRENCH EXCAVATION SAFETY STANDARDS. THE ENGINEER OF RECORD AND OWNER WILL NOT BE RESPONSIBLE FOR JOB SITE SAFETY PROCEDURES.
18. ALL TEMPORARY UTILITIES NECESSARY FOR CONSTRUCTION SHALL BE PROVIDED AT THE EXPENSE OF THE CONTRACTOR.
19. THE CONTRACTOR IS TO PROVIDE EROSION CONTROL/SEDIMENTATION BARRIERS (HAY BALES, SILTATION CURTAINS AND FLOATING TURBIDITY SCREENS) TO PREVENT SILTATION OF ADJACENT PROPERTY, STREETS, STORM SEWERS, AND WATERWAYS. IF, IN THE OPINION OF THE CITY AND/OR LOCAL AUTHORITIES, EXCESSIVE QUANTITIES OF EARTH ARE BEING TRANSPORTED OFF-SITE EITHER BY NATURAL DRAINAGE OR VEHICULAR TRAFFIC, THE CONTRACTOR IS TO REMOVE AND CLEAN SAID EARTH FROM TRAVELWAYS TO THE SATISFACTION OF THE CITY AND/OR LOCAL AUTHORITIES.
20. CONTRACTOR SHALL CONTACT SUNSHINE STATE ONE CALL OF FLORIDA TO OBTAIN LOCATIONS OF UNDERGROUND UTILITIES PRIOR TO PERFORMING EXCAVATIONS.
21. THE CONTRACTOR SHALL CONSIDER AND PLAN FOR, ON A DAILY BASIS, THE EFFECT OF TIDAL FLUCTUATION IN THE EXECUTION OF THE WORK.
22. THE PROJECT SITE IS ALONG AN ACTIVE NAVIGATION CHANNEL. THE CONTRACTOR SHALL CONSIDER AND PLAN FOR THE EFFECTS OF PASSING VESSELS.
23. SCALE BARS ARE INTENDED FOR REFERENCE ONLY. ALL DIMENSIONS NECESSARY FOR CONSTRUCTION SHALL BE TAKEN FROM DIMENSION ANNOTATION AND NOT SCALED DIRECTLY FROM DRAWINGS.

SURVEY NOTES

1. SURVEY PERFORMED BY GEORGE F. YOUNG INC. DATED JUNE 14, 2017.
2. ELEVATIONS SHOWN HEREON REFER TO NAVD88.
3. COORDINATES SHOWN HEREIN ARE REFERENCED TO GRID BEARINGS BASED UPON THE FLORIDA STATE PLANE COORDINATE SYSTEM, TRANSVERSE MERCATOR PROJECTION, WEST ZONE, NORTH AMERICAN DATUM OF 1983 (ADJUSTMENT OF 1999).
4. UNDERGROUND UTILITIES, FOUNDATIONS AND/OR OTHER IMPROVEMENTS HAVE NOT BEEN LOCATED EXCEPT THOSE SHOWN ON THIS SURVEY.
5. THE TIDAL DATUM RELATIONSHIP BASED ON USGS GAGE #023060013 HILLSBOROUGH RIVER A7 I-275 BRIDGE AT SULFUR SPRINGS, FL. REFERENCED TO THE NORTH AMERICAN VERTICAL DATUM OF 1988 (NAVD 88); TIDE INTERPOLATION AT POINT ID NO.714, SEE WWW.LABINS.ORG

VERTICAL DATUM RELATIONSHIP

DATUM	ELEV
MHHW	1.06 FEET ±
MHW	0.77 FEET
NAVD 88	0.00 FEET
MLW	-1.29 FEET
MLLW	-1.48 FEET ±

REFERENCE DRAWINGS

1. LOWRY PARK RIVER BANK STABILIZATION, CITY OF TAMPA DEPARTMENT OF PUBLIC WORKS. PREPARED BY DAVID VOLKERT & ASSOCIATES, DATED 12/1/1986

ENVIRONMENTAL MEASURES

1. TURBIDITY BARRIERS SHALL BE MANUFACTURED IN ACCORDANCE WITH FDOT ROADWAY AND TRAFFIC DESIGN STANDARDS INDEX NO. 103.
2. DURING WATERSIDE CONSTRUCTION, THE CONTRACTOR SHALL MONITOR THE TURBIDITY LEVELS TO ENSURE THAT STATE WATER QUALITY STANDARDS ARE MAINTAINED AND CONSTRUCTION METHODS ARE IN ACCORDANCE WITH THE PERMITS.
3. DURING CONSTRUCTION THE CONTRACTOR SHALL PLACE EROSION CONTROL DEVICES AND MEASURES AROUND THE PROJECT AREA AND OTHER AREA(S) NEEDED TO PREVENT EROSION AND THE MIGRATION OF SEDIMENT TO POINTS OUTSIDE THE DEMOLITION/CONSTRUCTION AREA(S).
4. ALL EROSION CONTROL DEVICES SHALL BE IN ACCORDANCE WITH FDOT STANDARD SPECIFICATION 104 AND STANDARD INDEX NO. 102 OF THE FDOT ROADWAY AND TRAFFIC DESIGN STANDARDS.
5. CONTRACTOR SHALL ADHERE TO THE FFWCC STANDARD FOR MANATEE CONDITIONS AND SMALLTOOTH SAWFISH FOR IN-WATER WORK.
6. CONTRACTOR NEEDS TO FULLY COMPLY WITH USACE CONSTRUCTION CONDITIONS FOR SEA TURTLE AND SMALLTOOTH SAWFISH.
7. NO SEAGRASS WAS OBSERVED IN THE VICINITY OF THE PROJECT SITE DURING FIELD VISIT CONDUCTED ON MAY 10TH, JULY 13TH AND SEPTEMBER 22, 2017. THESE OBSERVATIONS ARE ONLY REPRESENTATIVE OF SAID DATES.

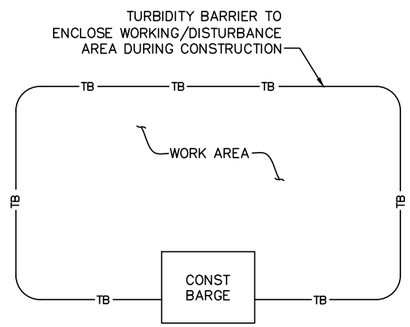

PLAN – OFF SHORE

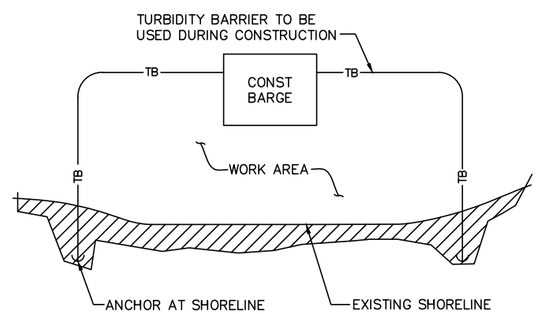

PLAN – ALONG SHORE

DETAIL – TURBIDITY CONTROL BARRIER

ABBREVIATIONS

DBL	= DOUBLE
EA	= EACH
EL	= ELEVATION
EQ	= EQUAL
FDOT	= FLORIDA DEPARTMENT OF TRANSPORTATION
FRP	= FIBER REINFORCED POLYMER
GALV	= GALVANIZED
LG	= LONG
MAX	= MAXIMUM
MHW	= MEAN HIGH WATER
MHHW	= MEAN HIGHER HIGH WATER
MIN	= MINIMUM
MLW	= MEAN LOW WATER
MLLW	= MEAN LOWER LOW WATER
MSL	= MEAN SEA LEVEL
NAD	= NORTH AMERICAN DATUM
NAVD	= NORTH AMERICAN VERTICAL DATUM
NIC	= NOT IN CONTRACT
SPA	= SPACES
SS	= STAINLESS STEEL
TBM	= TEMPORARY BENCH MARK
TBR	= TO BE REMOVED
TYP	= TYPICAL
UON	= UNLESS OTHERWISE NOTED
℄	= CENTERLINE
'	= MINUTES OR FEET
"	= INCHES
&	= AND
°	= DEGREE
±	= PLUS OR MINUS
PL	= PLATE
ø	= DIAMETER

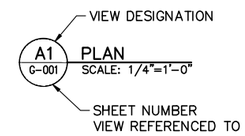

VIEW TITLE

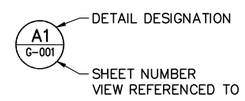

DETAIL CALLOUT

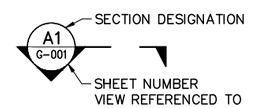

SECTION CALLOUT

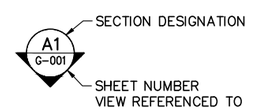

ELEVATION VIEW

100% SUBMITTAL
SEPTEMBER 13, 2018
NOT TO BE USED FOR CONSTRUCTION

CITY OF TAMPA FLORIDA ORGANIZED JULY 15 1887

Mark	Description	Date	Appr.

LOWRY PARK DOCK AND BOARDWALK IMPROVEMENTS

ABBREVIATIONS, LEGEND AND GENERAL NOTES

moffatt & nichol
501 EAST KENNEDY BLVD
SUITE 1910
TAMPA, FLORIDA 33602

Designed by: IWC
Dwn by: JAD
Ckd by: IWC
Reviewed by: DCM
Submitted by: MACPHERSON, DEBORAH MOFFATT & NICHOL
Date: 2018-05-18
Rev. -
M&N Project No. 9678-01
Drawing code:
Drawing Scale:
Plot scale: 1:1 (D SHEET)

SEAL

Sheet Reference No.
G-002
INDEX: 2 OF 33

File: Q:\TA\9678-01\cadd_Active_lowrypark\967801-LP_G-002; Plotted: 10/31/2018 4:01 PM by SMITH, ANTHONY R.; Saved: 8/27/2018 10:35 AM by MCOKER

DRAWING SCALES SHOWN BASED ON 22"x34" DRAWING

TREE PROTECTION AND REMOVAL:

1. ALL TREES TO REMAIN MUST BE PROTECTED BY PROTECTIVE BARRIERS. PROTECTIVE BARRIERS MUST REMAIN IN PLACE UNTIL LAND ALTERATION AND CONSTRUCTION ACTIVITIES ARE COMPLETED.
2. DURING LAND ALTERATION AND CONSTRUCTION ACTIVITIES, IT SHALL BE UNLAWFUL TO REMOVE VEGETATION BY GRUBBING OR TO PLACE SOIL ON THE SITE UNLESS OTHERWISE APPROVED BY CITY PARKS DEPARTMENT.
3. IN ORDER TO MINIMIZE SOIL EROSION AND CONTRIBUTE TO WATER QUALITY, PROPOSED LAND ALTERATION ACTIVITIES SHALL NOT UNNECESSARILY REMOVE EXISTING VEGETATION NOR ALTER EXISTING TOPOGRAPHY.
4. ADEQUATE PROTECTION MEASURES SHALL BE PROVIDED, AS NECESSARY, TO MINIMIZE EROSION AND DOWN STREAM SEDIMENTATION CAUSED BY SURFACE WATER RUNOFF ON EXPOSED LAND SURFACES.

PROTECTIVE BARRIER REQUIREMENTS AND SPECIFICATIONS FOR EXISTING TREES TO REMAIN:

1. PROTECTIVE BARRIERS ARE USED DURING LAND ALTERATION AND CONSTRUCTION ACTIVITIES TO PROTECT TREES AND NATURAL AREAS TO BE RETAINED ON-SITE.
2. PROTECTIVE BARRIERS MUST BE ERECTED AROUND TREES TO BE RETAINED WITHIN AN AREA WHERE LAND ALTERATION AND CONSTRUCTION ACTIVITIES WILL OCCUR AS WELL AS ALONG NATURAL AREAS WHERE SUCH AREAS ARE ADJACENT TO PERMITTED LAND ALTERATION OR CONSTRUCTION ACTIVITIES. A PROTECTIVE BARRIER MUST REMAIN IN PLACE UNTIL THE LAND ALTERATION AND CONSTRUCTION ACTIVITIES ARE COMPLETED OR UNTIL COMMENCEMENT OF GRADE FINISHING AND SODDING. NO GROUND DISTURBANCE MAY OCCUR WITHIN THE BARRICADED AREA. THE FOLLOWING REPRESENTS THE MINIMUM PROTECTION BARRIER SPECIFICATIONS.

FIG. A

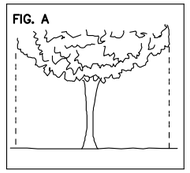

3. TO RESTRICT ACCESS INTO THE AREA WITHIN THE DRIPLINE OF A TREE, A PHYSICAL STRUCTURE NOT LESS THAN 3 FEET IN HEIGHT, COMPRISED OF WOOD OR OTHER SUITABLE MATERIAL, IS PLACED AROUND THE TREE AT THE DRIPLINE, EXCEPT WHERE LAND ALTERATION OR CONSTRUCTION ACTIVITIES ARE APPROVED WITHIN THE DRIPLINE.
4. THE DRIPLINE OF A TREE IS THE IMAGINARY, VERTICAL LINE THAT EXTENDS DOWNWARD FROM THE OUTERMOST TIPS OF THE TREE'S BRANCHES TO THE GROUND AS SHOWN IN FIG. A
5. NATURAL AREAS – TO RESTRICT ACCESS INTO AREAS WHERE LAND ALTERATION AND CONSTRUCTION ACTIVITIES ARE NOT AUTHORIZED, A PYSICAL STRUCTURE NOT LESS THAN 3 FEET IN HEIGHT IS PLACED ALONG THE PERIMETER OF SUCH AREAS.

FIG. B

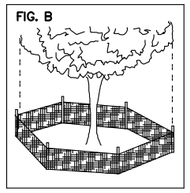

BARRIER SPECIFICATIONS FOR TREES:

1. FOUR CORNER UPRIGHT STAKES OF NO LESS THAT 2" X 2" LUMBER CONNECTED BY HORIZONTAL MEMBERS OF NO LESS THAN 1" X 4" LUMBER; OR UPRIGHT STAKES SPACES AT 5' INTERVALS OF NO LESS THAN 2" X 2" LUMBER CONNECTED BY SILT SCREEN FABRIC OR MATERIAL OF COMPARABLE DURABILITY. AS SHOWN IN FIG. B
2. TREE PROTECTION BARRICADES TO BE INSTALLED AT A MINIMUM OFFSET OF TEN FEET OR AS DIRECTED BY PROJECT MANAGER.

FIG. C

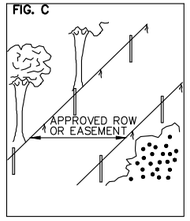

BARRIER SPECIFICATIONS FOR NATURAL AREAS:

1. UPRIGHT STAKES OF NO LESS THAN 2" X 2" LUMBER SPACED NO MORE THAN 25' APART AND CONNECTED BY TWINE FLAGGED WITH PLASTIC SURVEYING TAPE AT REGULAR INTERVALS OF 5–10' AS SHOWN IN FIG. C.
2. OTHER METHODS OF DEMARCATION WILL BE CONSIDERED DEPENDING UPON THE CHARACTERISTICS OF THE SITE.
3. WHY A BARRIER:
   TO PROTECT ALL ABOVE GROUND PORTIONS OF TREES AND OTHER SIGNIFICANT VEGETATION FROM MECHANICAL DAMAGE.
   TO PROTECT ROOT SYSTEMS FROM COMPACTION.
   TO PROVIDE AWARENESS OF PROTECTED AREAS TO EQUIPMENT OPERATORS.

EXISTING QUANTITIES TO BE REMOVED OVER – WATER

ITEM	AREA (SF)
SOUTH DOCK & GANGWAY	705
FLOATING DOCK	126
NORTH DOCK	994
BOARDWALK	1459

PROPOSED QUANTITIES OVER – WATER

ITEM	AREA
SOUTH DOCK & GANGWAY	547 SF
FLOATING DOCK	603 SF
NORTH DOCK	1512 SF
BULKHEAD	85 LF
BOARDWALK	1674 SF

100% SUBMITTAL
SEPTEMBER 13, 2018
NOT TO BE USED FOR CONSTRUCTION

CITY OF TAMPA FLORIDA ORGANIZED JULY 15 1887

Mark	Description	Date	Appr.

LOWRY PARK DOCK AND BOARDWALK IMPROVEMENTS

GENERAL NOTES

moffatt & nichol
501 EAST KENNEDY BLVD
SUITE 1910
TAMPA, FLORIDA 33602

Designed by: IWC
Dwn by: JAD
Ckd by: IWC
Reviewed by: DCM,
Submitted by: MACPHERSON, DEBORAH MOFFATT & NICHOL
Date: 2018-08-29
Rev. -
M&N Project No. 9678-01
Drawing code:
Drawing Scale:
Plot scale: 1:1 (0 SHEET)

SEAL

Sheet Reference No.
G-003
INDEX: 3 OF

File: C:\TA\9678-01\cadd_Active_lowrypark\967801-LP_G-003; Plotted: 10/31/2018 4:01 PM by SMITH, ANTHONY R.; Saved: 8/31/2018 9:03 AM by TALSTON

DRAWING SCALES SHOWN BASED ON 22"x34" DRAWING

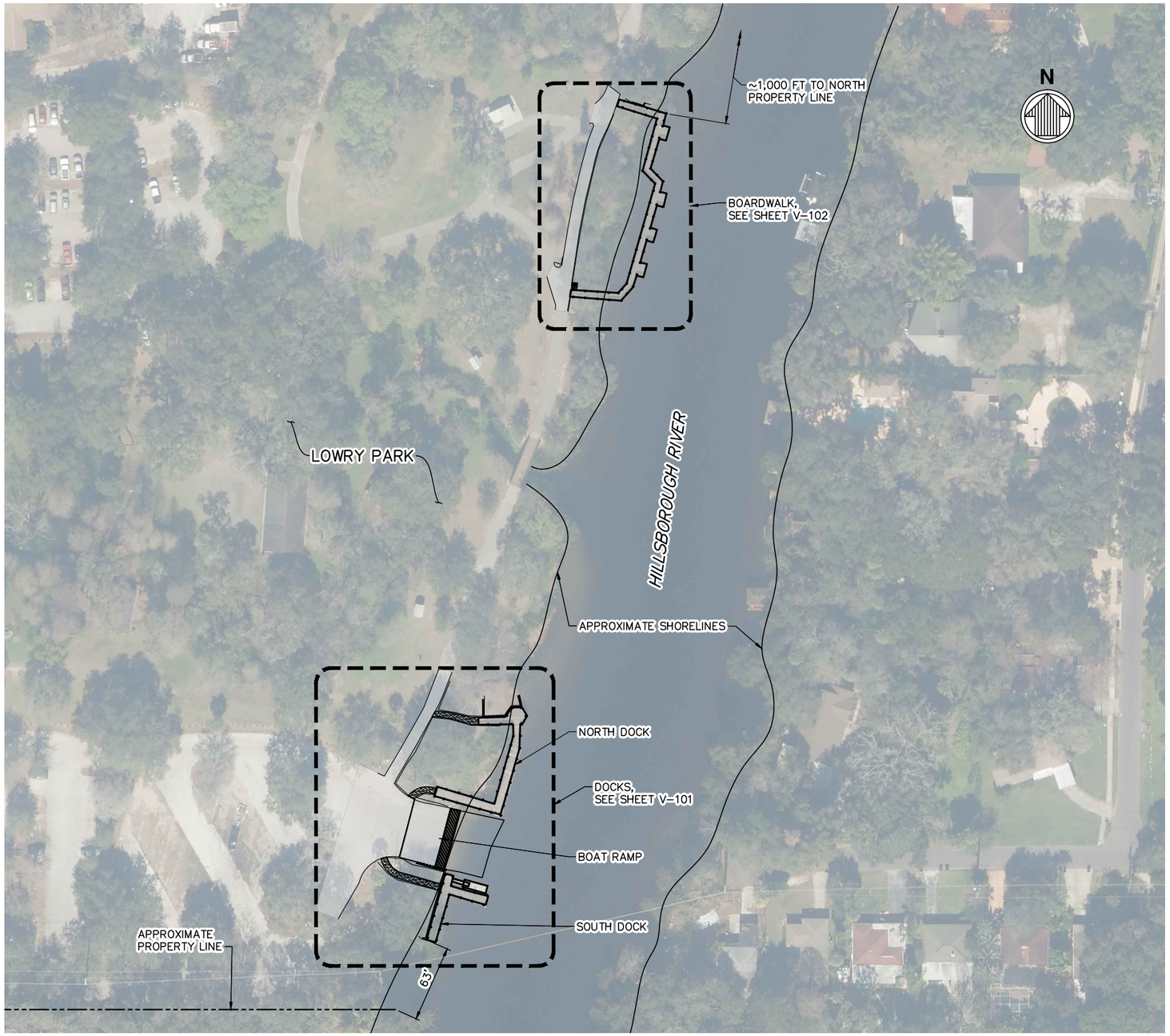

50' 0' 50' 100'

SCALE: 1"=50'

100% SUBMITTAL
SEPTEMBER 13, 2018
NOT TO BE USED FOR CONSTRUCTION

DRAWING SCALES SHOWN BASED ON 22"x34" DRAWING

CITY OF TAMPA FLORIDA ORGANIZED JULY 15 1887

Mark	Description	Date	Appr.

LOWRY PARK DOCK AND BOARDWALK IMPROVEMENTS

SITE PLAN

moffatt & nichol
501 EAST KENNEDY BLVD
SUITE 1910
TAMPA, FLORIDA 33602

Designed by: IWC
Dwn by: JAD
Ckd by: IWC
Reviewed by: DCM
Submitted by: MACPHERSON, DEBORAH MOFFATT & NICHOL
Date: 2018-05-18
Rev. -
M&N Project No. 9678-01
Drawing code:
Drawing Scale:
Plot scale: 1:1 (D SHEET)

SEAL

Sheet Reference No.
V-100
INDEX: 4 OF 33

File: Q:\TA\9678-01\cadd_Active_lowrypark\967801-LP_V-100; Plotted: 10/31/2018 4:01 PM by SMITH, ANTHONY R.; Saved: 8/27/2018 10:38 AM by MCOKER

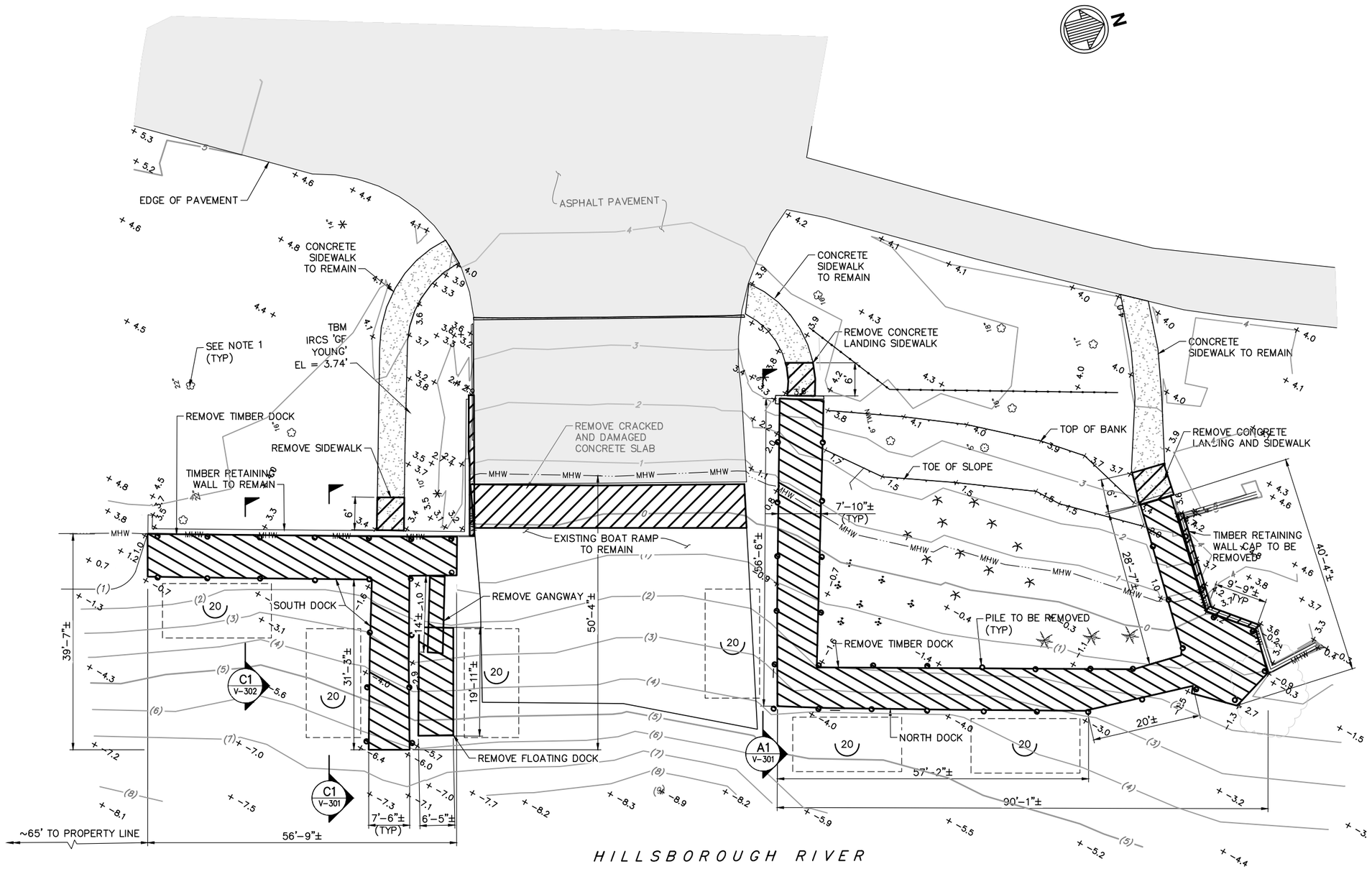

NOTES

1. ALL TREES TO BE PRESERVED UNLESS OTHERWISE NOTED, SEE SHEET G-003.

LEGEND

- TO BE REMOVED
- SINGLE SLIP (20 FT)
- BATHYMETRIC CONTOUR
- TOPOGRAPHIC CONTOUR
- SPOT ELEVATION
- UMBRELLA SEDGE
- CATTAIL
- LEATHER FERN

10' 0' 10' 20'

SCALE: 1"=10'

100% SUBMITTAL
SEPTEMBER 13, 2018
NOT TO BE USED FOR CONSTRUCTION

CITY OF TAMPA FLORIDA ORGANIZED JULY 15 1887

Mark	Description	Date	Appr.

LOWRY PARK DOCK AND BOARDWALK IMPROVEMENTS

EXISTING CONDITIONS AND DEMOLITION PLAN (1 OF 2)

Date: 2018-05-18 | Rev. -
M&N Project No. 9678-01
Drawing code:
Drawing Scale: Plot scale:1:1 (D SHEET)
Designed by: IWC
Dwn by: JAD | Ckd by: IWC
Reviewed by: DCM
Submitted by: MACPHERSON, DEBORAH MOFFATT & NICHOL

moffatt & nichol
501 EAST KENNEDY BLVD SUITE 1910 TAMPA, FLORIDA 33602

SEAL

Sheet Reference No.
V-101
INDEX: 5 OF 33

File: Q:\TA\9678-01\cadd_Active_lowrypark\967801-LP_V-101; Plotted: 10/31/2018 4:01 PM by SMITH, ANTHONY R.; Saved: 9/6/2018 11:24 AM by TALSTON

DRAWING SCALES SHOWN BASED ON 22"x34" DRAWING

NOTES

1. ALL TREES TO BE PRESERVED UNLESS OTHERWISE NOTED, SEE SHEET G-003.

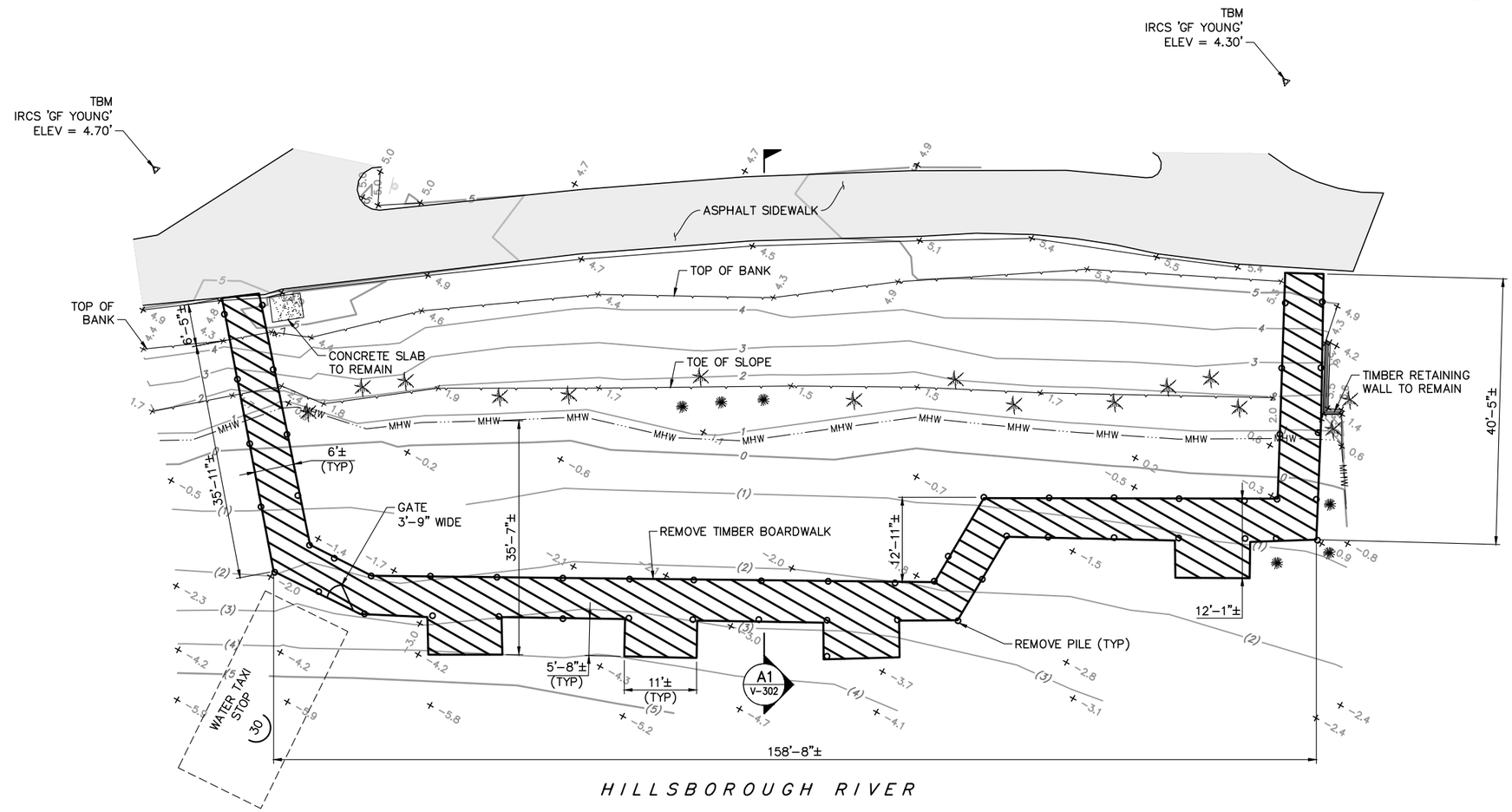

LEGEND

- TO BE REMOVED
- (3) BATHYMETRIC CONTOUR
- 3 TOPOGRAPHIC CONTOUR
- +3.2 SPOT ELEVATION
- NEEDLE RUSH
- LEATHER FERN
- 30 SINGLE SLIP (30FT)

10' 0' 10' 20'

SCALE: 1"=10'

100% SUBMITTAL
SEPTEMBER 13, 2018
NOT TO BE USED FOR CONSTRUCTION

CITY OF TAMPA FLORIDA ORGANIZED JULY 15 1887

Mark	Description	Date	Appr.

LOWRY PARK DOCK AND BOARDWALK IMPROVEMENTS

EXISTING CONDITIONS AND DEMOLITION PLAN (2 OF 2)

Date: 2018-05-18 | Rev. -
M&N Project No. 9678-01
Drawing code:
Drawing Scale: Plot scale: 1:1 (0 SHEET)

Designed by: IWC
Dwn by: JAD
Cad by: IWC
Reviewed by: DCM
Submitted by: MACPHERSON, DEBORAH MOFFATT & NICHOL

moffatt & nichol
501 EAST KENNEDY BLVD SUITE 1910 TAMPA, FLORIDA 33602

SEAL

Sheet Reference No.
V-102
INDEX: 6 OF 33

File: G:\TA\9678-01\cadd_Active_lownpark\967801-LP_V-102; Plotted: 10/31/2018 4:01 PM by SMITH, ANTHONY R.; Saved: 8/28/2018 11:16 AM by TALSTON

DRAWING SCALES SHOWN BASED ON 22"x34" DRAWING

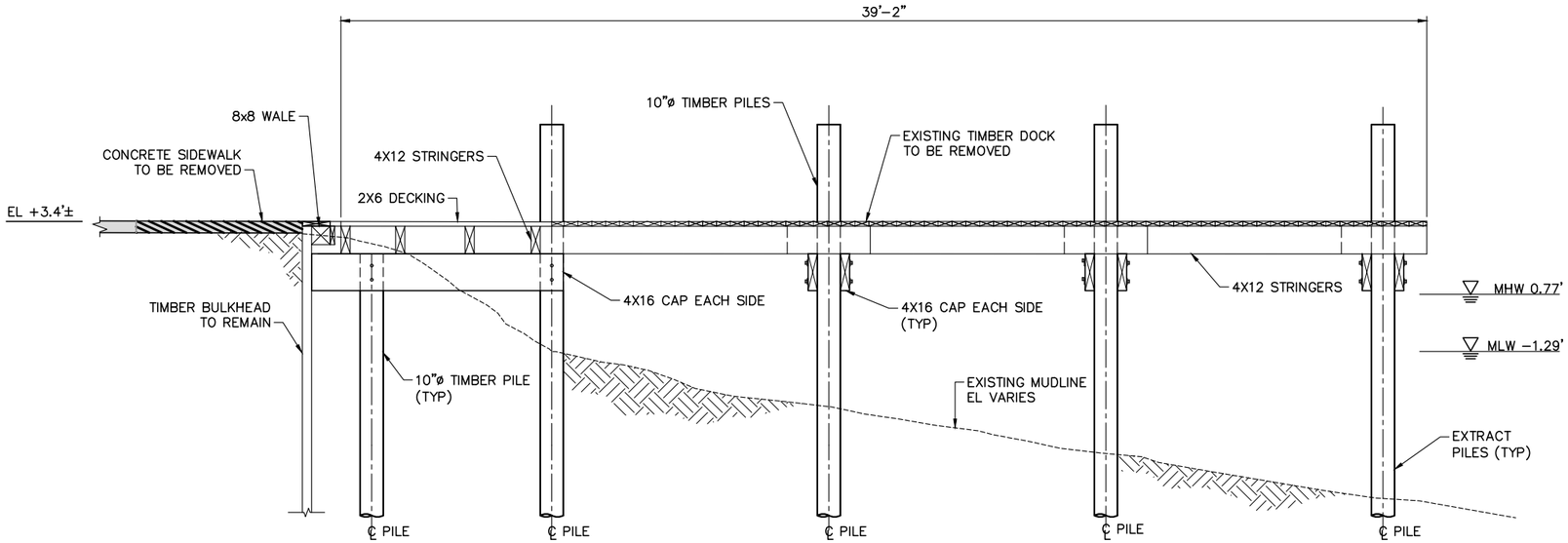

C1 V-101 SOUTH DOCK ELEVATION
SCALE: 3/8"=1'-0"

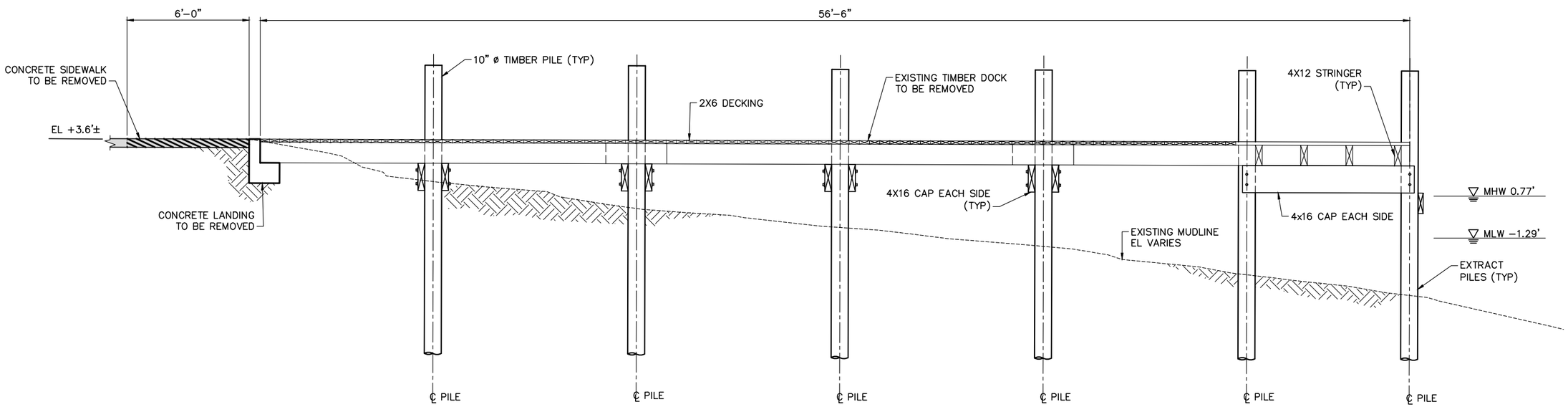

A1 V-101 NORTH DOCK ELEVATION
SCALE: 3/8"=1'-0"

4' 0'-0" 2' 4'
SCALE: 3/8"=1'-0"

100% SUBMITTAL
SEPTEMBER 13, 2018
NOT TO BE USED FOR CONSTRUCTION

CITY OF TAMPA FLORIDA ORGANIZED JULY 15 1887

Mark	Description	Date	Appr.

LOWRY PARK DOCK AND BOARDWALK IMPROVEMENTS

SOUTH DOCK ELEVATIONS

Designed by: IWC
Dwn by: JAD
Ckd by: IWC
Reviewed by: DCM
Submitted by: MACPHERSON, DEBORAH MOFFATT & NICHOL
Date: 2018-05-18
Rev. -
M&N Project No. 9678-01
Drawing code:
Drawing Scale: Plot scale: 1:1 (0 SHEET)

moffatt & nichol
501 EAST KENNEDY BLVD
SUITE 1310
TAMPA, FLORIDA 33602

SEAL

Sheet Reference No.
V-301
INDEX: 7 OF 33

File: C:\TA\9678-01\cadd_Active_lowrypark\967801-LP_V-301; Plotted: 10/31/2018 4:02 PM by SMITH, ANTHONY R.; Saved: 12/29/2017 6:49 PM by JDURAN

DRAWING SCALES SHOWN BASED ON 22"x34" DRAWING

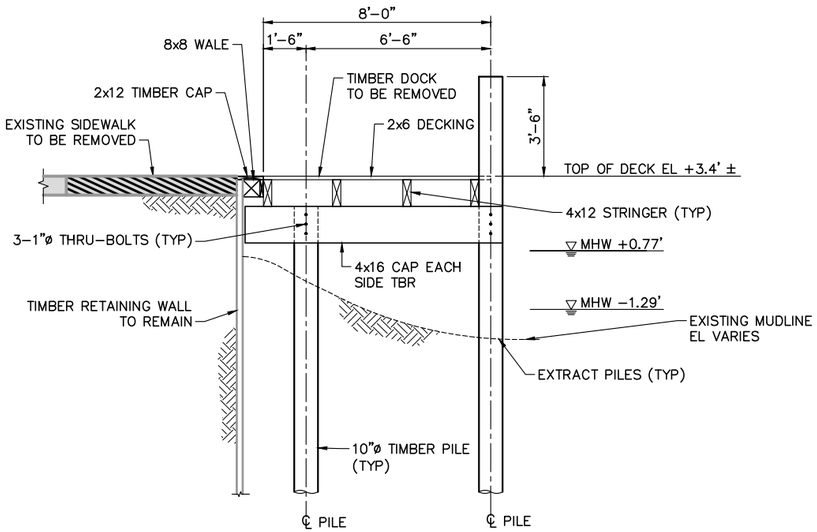

C1 / V-101 SOUTH DOCK BULKHEAD
SCALE: 3/8"=1'-0"

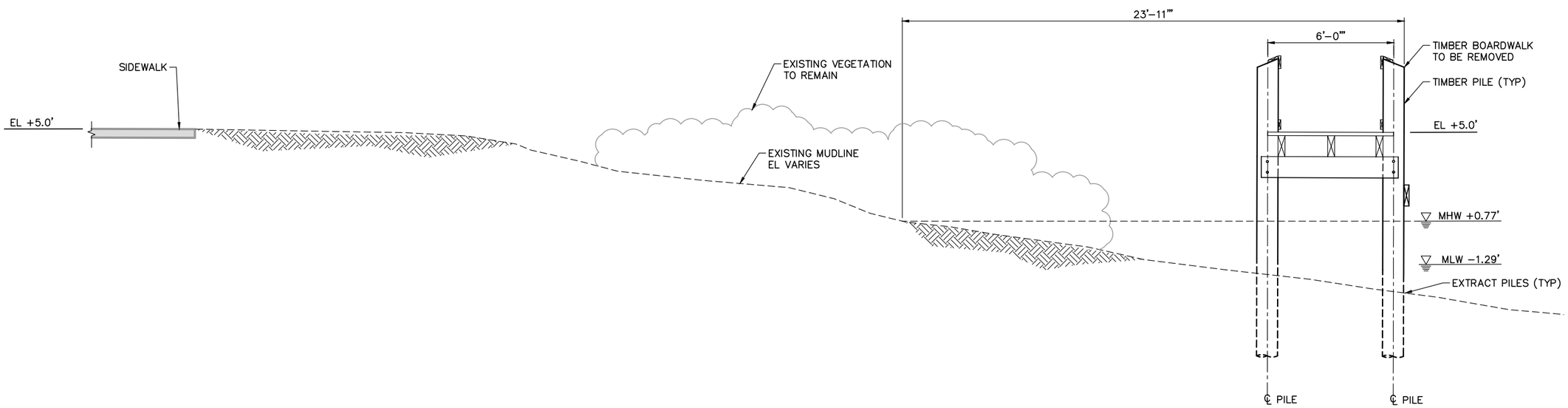

A1 / V-102 SECTION AT BOARDWALK
SCALE: 3/8"=1'-0"

4' 0'-0" 2' 4'
SCALE: 3/8"=1'-0"

100% SUBMITTAL
SEPTEMBER 13, 2018
NOT TO BE USED FOR CONSTRUCTION

Mark	Description	Date	Appr.

LOWRY PARK DOCK AND BOARDWALK IMPROVEMENTS

EXISTING DOCK DEMOLITION SECTIONS

Designed by: IWC
Dwn by: JAD
Ckd by: IWC
Reviewed by: DCM
Submitted by: MACPHERSON, DEBORAH MOFFATT & NICHOL
Date: 2018-05-18
Rev. -
M&N Project No. 9678-01
Drawing code:
Drawing Scale:
Plot scale: 1:1 (0 SHEET)

501 EAST KENNEDY BLVD
SUITE 1910
TAMPA, FLORIDA 33602

moffatt & nichol

SEAL

Sheet Reference No.
V-302
INDEX: 8 OF 33

File: Q:\TA\9678-01\cadd_Active_lowrypark\967801-LP_V-302; Plotted: 10/31/2018 4:02 PM by SMITH, ANTHONY R.; Saved: 5/7/2018 12:18 PM by KSANCHEZ

DRAWING SCALES SHOWN BASED ON 22"x34" DRAWING

DESIGN CRITERIA:

1. TIMBER FIXED DOCK:

   A. UNIFORM LIVE LOAD. . . . . .100 PSF
   B. CONCENTRATED LIVE LOAD. . . . . 400 LB POINT LOAD
   C. HANDRAIL LOAD. . . . . AS REQ'D PER FLORIDA BUILDING CODE

2. FLOATING DOCK:

   A. UNIFORM LIVE LOAD (ROW DOCK). . . . . 25 PSF
   B. UNIFORM LIVE LOAD (TRANSIENT DOCK). . . . . 40 PSF
   C. CONCENTRATED LIVE LOAD. . . . . 400 LBS
   D. WIND LOAD
      (FIXED PIER & FLOATING DOCKS). . . . . 50 MPH, 1 MIN AVERAGE W/ VESSELS
      140 MPH, 3-SEC GUST W/O VESSELS

3. DESIGN VESSEL:

   A. MAIN FLOATING DOCK. . . . . .30 FOOT BOAT W/ 12 FOOT BEAM

   B. KAYAK DOCK. . . . . .CANOE/KAYAK

4. ALUMINUM GANGWAY:

   A. UNIFORM LIVE LOAD. . . . . .50 PSF
   B. HANDRAIL LOAD. . . . . AS REQ'D PER FLORIDA BUILDING CODE
   C. MAXIMUM DEFLECTION. L/240
   D. CONCENTRATED LIVE LOAD. . . . . 400 LB

CONCRETE AND REINFORCING STEEL:

1. ALL CONCRETE WORK SHALL BE PERFORMED IN ACCORDANCE WITH ACI 301 "SPECIFICATIONS FOR STRUCTURAL CONCRETE", UNLESS OTHERWISE NOTED ON THE DRAWINGS. ALL REINFORCED CONCRETE MATERIALS SHALL BE PROPORTIONED, FABRICATED, DELIVERED, AND PLACED IN ACCORDANCE WITH ACI 318 "BUILDING CODE REQUIREMENTS FOR STRUCTURAL CONCRETE".

2. ALL DETAILING, FABRICATION, AND ERECTION OF REINFORCING STEEL SHALL CONFORM TO THE LATEST EDITION OF THE "ACI MANUAL OF CONCRETE PRACTICE" INCLUDING BUT NOT LIMITED TO: ACI 301 "SPECIFICATIONS FOR STRUCTURAL CONCRETE" AND ACI SP-66 "ACI DETAILING MANUAL".

3. ALL REINFORCING BAR SPLICES SHALL BE CLASS "B" TENSION LAP SPLICES IN ACCORDANCE WITH ACI 318, CHAPTER 12, UNLESS OTHERWISE NOTED.

4. ALL CAST-IN-PLACE CONCRETE SHALL BE NORMAL WEIGHT CONCRETE (145± PCF).

5. MINIMUM CONCRETE COVER FOR STEEL REINFORCEMENT SHALL BE 3", UNLESS OTHERWISE NOTED ON THE DRAWINGS.

6. PROVIDE 3/4", 45° CHAMFER ON ALL EXPOSED EXTERNAL CORNERS OF CONCRETE, UNLESS OTHERWISE NOTED ON THE DRAWINGS.

7. ALL JOINTS BETWEEN CAST-IN-PLACE CONCRETE AND HARDENED CONCRETE SHALL BE CLEANED WITH A ROUGHENED SURFACE OF 1/4" AMPLITUDE AND COATED A EPOXY BONDING COMPOUND IN ACCORDANCE WITH MANUFACTURER'S RECOMMENDATIONS, UNLESS OTHERWISE NOTED.

8. CONCRETE MATERIALS SHALL CONFORM TO THE FOLLOWING, UNLESS OTHERWISE NOTED:

   A. CAST-IN-PLACE CONCRETE. . . . . 5500 PSI @ 28 DAYS (MIN FDOT CLASS IV)
   B. PRESTRESSED CONCRETE PILES. . . . . 6000 PSI @ 28 DAYS
      4000 PSI @ RELEASE

9. REINFORCING STEEL SHALL BE IN ACCORDANCE WITH ASTM A 615. CONCRETE REINFORCING MATERIALS SHALL CONFORM TO THE FOLLOWING, UNLESS OTHERWISE NOTED:

   A. REINFORCEMENT FOR CONCRETE. . . . . .ASTM A 615, GR 60
   B. PRESTRESSING STEEL. . . . . .ASTM A 416, GRADE 270
      (LOW RELAXATION STRANDS)

10. CURE CONCRETE USING CONTINUOUS MOISTURE AND/OR MEMBRANE CURING COMPOUND IN ACCORDANCE WITH FDOT SPECIFICATION 400-16.1 AND 400-16.2

STRUCTURAL AND MISCELLANEOUS STEEL:

1. ALL STEEL WORK SHALL BE PERFORMED IN ACCORDANCE WITH THE AISC SPECIFICATIONS FOR THE DESIGN, FABRICATION, AND ERECTION OF STRUCTURAL STEEL FOR BUILDINGS. ALL WELDING SHALL CONFORM TO AWS D1.1.

2. STEEL MATERIALS SHALL CONFORM TO THE FOLLOWING, UNLESS OTHERWISE NOTED:

   A. MISC PLATES, BARS, & SHAPES. . . . . ASTM A 36, GALV, UON
   B. BOLTS & NUTS. . . . . .ASTM A 307, GALV, UON

3. ALL STEEL SHAPES, PLATES, OTHER FABRICATIONS, AND ALL HARDWARE INDICATED SHALL BE ZINC-COATED OR GALVANIZED BY THE HOT-DIPPED PROCESS IN ACCORDANCE WITH THE REQUIREMENTS OF ASTM A 123 AND/OR A 153, AS APPLICABLE, AFTER FABRICATION, UNLESS OTHERWISE NOTED.

4. FIELD TREAT DAMAGED GALVANIZED STEEL FINISH WITH TWO COATS OF HIGH ZINC DUST OXIDE PAINT, COLD GALVANIZED COMPOUNDS, OR APPROVED EQUAL, CONFORMING TO THE REQUIREMENTS OF ASTM A 780. IN ADDITION, ALL EXPOSED THREADED SURFACES SHALL BE PAINTED WITH TWO COATS OF HIGH ZINC DUST OXIDE PAINT AFTER INSTALLATION OF THE NUT.

TIMBER CONSTRUCTION:

1. ALL TIMBER CONSTRUCTION SHALL CONFORM TO THE RECOMMENDATIONS OF THE AMERICAN INSTITUTE OF TIMBER CONSTRUCTION.

2. TIMBER PILES SHALL BE DRIVEN TO THE TIP ELEVATION INDICATED ON THE DRAWINGS, USING A HAMMER OF AN APPROVED TYPE, WITH A CAPACITY AT LEAST EQUAL TO THE HAMMER MANUFACTURER'S RECOMMENDATION FOR THE TOTAL WEIGHT OF PILE AND CHARACTER OF THE SUBSURFACE MATERIAL TO BE ENCOUNTERED.

3. SPUDDING AND/OR JETTING OF TIMBER PILES SHALL BE PERFORMED IN ACCORDANCE WITH THE SPECIFICATIONS.

4. TIMBER PILES SHALL BE TREATED IN ACCORDANCE WITH AWPA MP-1 FOR TIMBER IN SALTWATER IMMERSION.

5. ALL OTHER TIMBER MATERIALS SHALL BE TREATED IN ACCORDANCE WITH AWPA U1 FOR TIMBER IN SALTWATER IMMERSION, PRESERVATIVE RETENTION SHALL BE 2.50 PCF, UNLESS OTHERWISE NOTED. CCA PRESERVATIVE RETENTION OF 2.50 PCF IS ALLOWED ONLY IN MEMBERS SUBJECT TO SALTWATER IMMERSION. ACCORDINGLY, THE FOLLOWING ITEMS SHALL BE PROVIDED WITH TREATMENT AS INDICATED:

   A. 4x6 HANDRAIL POST. . . . . .MCA TREATMENT @ 0.15 PCF (GROUND CONTACT)
   B. HANDRAIL & DECKING. . . . . .MCQ TREATMENT @ 0.15 PCF (ABOVE GROUND)

6. TIMBER RELATED MATERIALS SHALL CONFORM TO THE FOLLOWING, UNLESS OTHERWISE NOTED:

   A. TIMBER PILES. . . . . .ASTM D 25
   B. TIMBER BENT CAPS. . . . . SP NO. 1 DENSE (S4S)
   C. TIMBER STRINGERS/HEADERS. . . . . .SP NO. 1 DENSE (S4S)
   D. MISC TIMBER (INCLUDING HANDRAIL). . . . . SP NO. 1 DENSE (S4S)
   E. COMPOSITE DECKING . . . . . .2x6 SOLID PROFILE
   F. CONNECTING BOLTS & NUTS. . . . . ASTM 316, STAINLESS STEEL, UON

7. WHEN CONNECTING HARDWARE IS SHOWN ON THE DRAWINGS, THE TYPE, SIZE, SPACING, AND ALIGNMENT ARE CRITICAL AND MUST BE MAINTAINED. DO NOT UNDERCUT WOOD. CONNECTIONS SHALL PULL AND HOLD MEMBERS BEING JOINED INTO CLOSE CONTACT.

8. WASHERS SHALL BE CIRCULAR FLAT SMOOTH AND SHALL CONFORM TO ANSI B18.22.1. USE DOCK WASHERS OR OGEE WASHERS WHERE INDICATED OR REQUIRED.

9. CHECK ALL BOLTS BY BURRING THE THREADS AFTER THE NUTS HAVE BEEN FINALLY TIGHTENED. RECOAT EXPOSED PORTION OF BOLT WITH TWO COATS OF HIGH ZINC DUST OXIDE PAINT.

10. BORE HOLES FOR THRU BOLTS WITH A BIT 1/16 INCH LARGER IN DIAMETER THAN THE SHANK OF THE BOLT.

11. TIMBER PILES SHALL BE WRAPPED WITH HDPE OR PVC BLACK PILE WRAP WITH A MINIMUM 6 INCHES OVERLAP. PILE WRAP SHALL EXTEND FROM BOTTOM OF PILE CAP TO A MINIMUM OF 2 FEET BELOW THE MUDLINE. INSTALL USING 1-1/2 INCH STAINLESS STEEL SPIRAL-SHANK ROOFING NAILS SPACED AT 2 INCHES ON CENTER ALONG SEAM.

FLOATING DOCKS:

1. AMERICAN SOCIETY OF CIVIL ENGINEERS – MANUALS AND REPORTS ON ENGINEERING PRACTICE NO. 50 – PLANNING AND DESIGN GUIDELINES FOR SMALL CRAFT HARBORS (2012).

2. ADA STANDARDS FOR ACCESIBLE DESIGN, SECTION 1003 RECREATIONAL BOATING FACILITIES.

BULKHEAD:

1. BULKHEAD SHALL BE CRANE MATERIALS INTERNATIONAL, INC ULTRA-COMPOSITE SHEET PILING OR APPROVED EQUAL. COMPOSITE SHEET PILING SHALL HAVE:
   A. MINIMUM STIFFNESS (EXL) = 4.7X108 LB-IN2/FT OF WALL
      MINIMUM SECTION MODULUS = 13 IN^3/FT OF WALL

   B. RESIN SYSTEM SHALL BE A HIGH PERFORMANCE POLYURETHANE REINFORCED WITH BIAXIAL STITCHED E-GLASS FABRICS, CONTINUOUS STRAND MAT AND ALIGNED UNIDIRECTIONAL WOVINGS.

   C. SHEET PILE SHALL HAVE A UV RESISTANCE AND LOW WATER ABSORPTION.

   D. SHEET PILE SHALL BE MANUFACTURED USING THE PULTRUSION PROCESS.

   E. SHEET PILE SHALL BE IN ACCORDANCE WITH FDOT STANDARD SPECIFICATION 973 (JANUARY 2017 EDITION).

2. ALL TIE RODS SHALL BE DYWIDAG THREADED BARS, GRADE 75, ASTM A 615 OR ENGINEER APPROVED EQUAL.

3. TIE RODS SHALL BE WRAPPED WITH CARBINE DENSYL TAPE OR ENGINEER APPROVED EQUAL. SURFACE PREPARATION & TAPE APPLICATION SHALL BE PER MANUFACTURER'S RECOMMENDATION.

4. CONTRACTOR SHALL PROVIDE LAYOUT OF SHEET PILING ENSURING BEST FIT TO DESIGN ALIGNMENTS TO ENGINEER FOR REVIEW. ALL SHEET PILE AND TIE RODS SHOWN ARE SCHEMATIC.

5. SHAPES, BARS, AND PLATES SHALL BE ASTM A 572.

6. BULKHEAD HAS NOT BEEN DESIGNED FOR CONSTRUCTION LOADING. CONTRACTOR SHALL NOT OPERATE EQUIPMENT BEHIND BULKHEAD DURING CONSTRUCTION.

7. CONCRETE CAP AND TIE-BACK SYSTEM SHALL BE INSTALLED PRIOR TO PLACEMENT OF BACKFILL BEHIND BULKHEAD. CONCRETE CAP SHALL BE AT LEAST 7 DAYS OLD AND HAVE ACHIEVED A MINIMUM COMPRESSIVE STRENGTH OF 0.85F'_c BEFORE BACKFILLING.

8. BULKHEAD CONSTRUCTION SHALL BE IN ACCORDANCE WITH SECTION 548 OF THE FDOT DESIGN STANDARD SPECIFICATIONS.

COMPOSITE DECKING:

1. DECKING SHALL BE 2x6 TREX COMPOSITE DECKING OR APPROVED EQUAL.

2. DECKING SHALL MEET THE LIVE LOAD CRITERIA SPECIFIED IN STRUCTURAL NOTES SHEET S-001 FOR THE STRINGER SPACING INDICATED AND GANGWAY WHEEL LOADING PER TECHNICAL SPECIFICATIONS.

3. DECK FASTENERS SHALL BE INSTALLED PER MANUFACTURER'S RECOMMENDATION.

100% SUBMITTAL
SEPTEMBER 13, 2018
NOT TO BE USED FOR CONSTRUCTION

CITY OF TAMPA FLORIDA ORGANIZED JULY 15 1887

Mark	Description	Date	Appr.

LOWRY PARK DOCK AND BOARDWALK IMPROVEMENTS

STRUCTURAL NOTES

moffatt & nichol
501 EAST KENNEDY BLVD
SUITE 1910
TAMPA, FLORIDA 33602

Designed by: IWC		Date: 2018-05-18	Rev. -
Dwn by: JAD	Cad by: IWC	M&N Project No. 9678-01	
Reviewed by: DCM		Drawing code:	
Submitted by: MACPHERSON, DEBORAH MOFFATT & NICHOL		Drawing Scale: Plot scale: 1:1 (0 SHEET)	

SEAL

Sheet Reference No.
S-001
INDEX: 9 OF 33

File: G:\TA\9678-01\cadd_Active_lowrypark\967801-LP_S-001; Plotted: 10/31/2018 4:02 PM by SMITH, ANTHONY R.; Saved: 8/27/2018 10:56 AM by MCOKER

DRAWING SCALES SHOWN BASED ON 22"x34" DRAWING

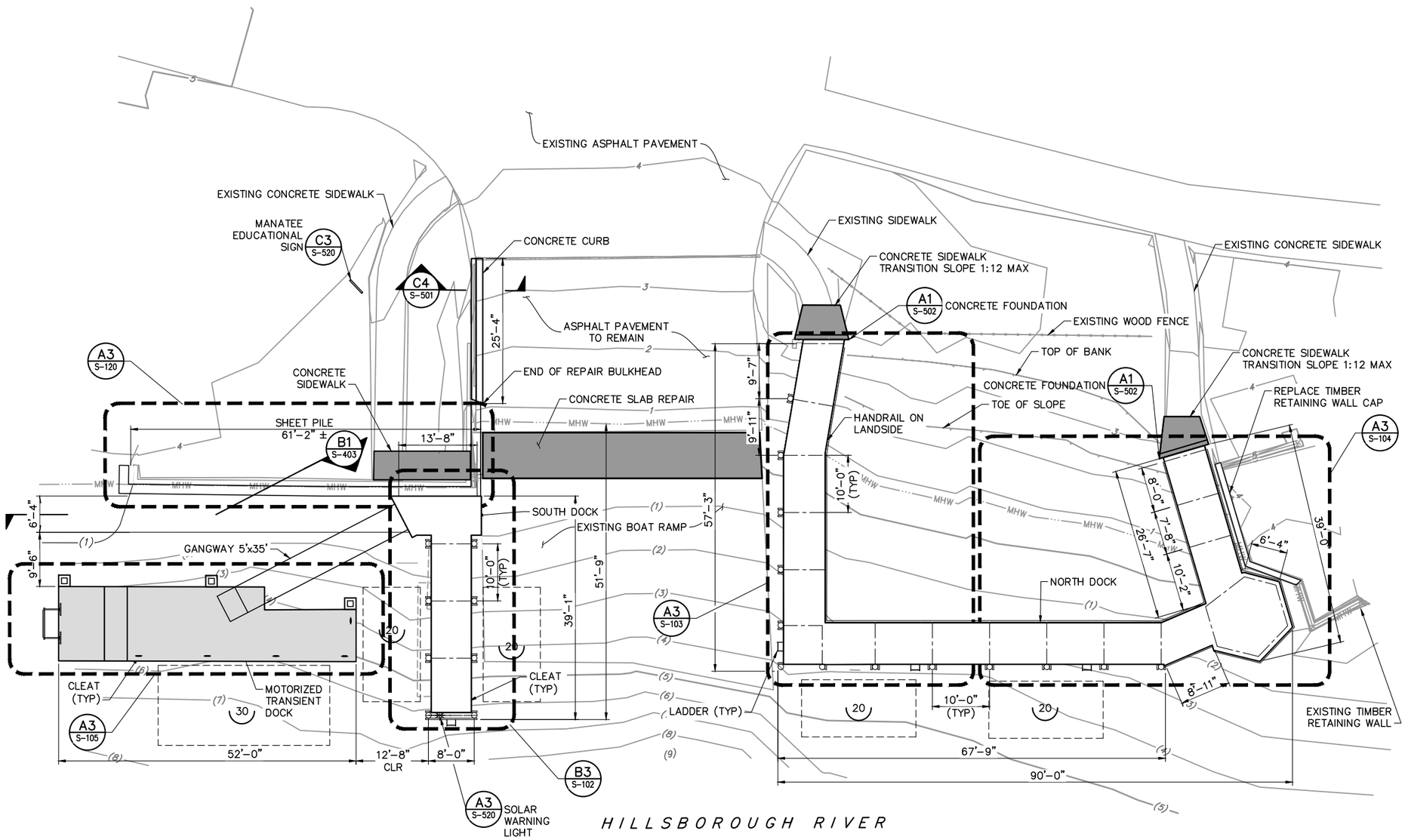

LEGEND:

- LADDER
- GUIDE PILE
- CONCRETE
- FLOATING DOCK
- LIGHT

10' 0' 10' 20'

SCALE: 1"=10'

100% SUBMITTAL
SEPTEMBER 13, 2018
NOT TO BE USED FOR CONSTRUCTION

Mark	Description	Date	Appr.

CITY OF TAMPA FLORIDA ORGANIZED JULY 15 1887

LOWRY PARK DOCK AND BOARDWALK IMPROVEMENTS

NORTH AND SOUTH DOCK LAYOUT PLAN

Designed by: IWC
Dwn by: JAD
Ckd by: IWC
Reviewed by: DCM
Submitted by: MACPHERSON, DEBORAH MOFFATT & NICHOL
Date: 2018-05-18
M&N Project No. 9678-01
Drawing code:
Drawing Scale: Plot scale: 1:1 (0 SHEET)
Rev. -

501 EAST KENNEDY BLVD SUITE 1310 TAMPA, FLORIDA 33602

moffatt & nichol

SEAL

Sheet Reference No.
S-100
INDEX: 10 OF 33

File: C:\TA\9678-01\cadd_Active_lowrypark\967801-LP_S-100; Plotted: 10/31/2018 4:02 PM by SMITH, ANTHONY R.; Saved: 9/12/2018 3:36 PM by JJORDAN

DRAWING SCALES SHOWN BASED ON 22"x34" DRAWING

NOTES

1. COORDINATE SYSTEM, NAD83 FLORIDA STATE PLANE, WEST ZONE, US FOOT.

WORKING POINTS TABLE		
POINT	N	E
WP–1	1337460.8530	506084.6082
WP–2	1337526.0258	506085.9496
WP–3	1337521.7291	506101.7056
WP–4	1337507.7838	506098.4188
WP–5	1337495.2023	506094.4672
WP–6	1337510.5448	506138.3885
WP–7	1337442.9887	506110.0000
WP–8	1337582.6445	506090.6968
WP–9	1337574.2294	506108.6348
WP–10	1337564.4887	506144.3305
WP–11	1337628.6435	506161.8363
WP–12	1337639.0428	506160.9561
WP–13	1337645.5319	506164.5433
WP–14	1337651.8843	506160.7164
WP–15	1337651.7463	506153.3017
WP–16	1337646.8514	506150.4729
WP–17	1337646.4154	506127.2101
WP–18	1337462.2093	506079.8824

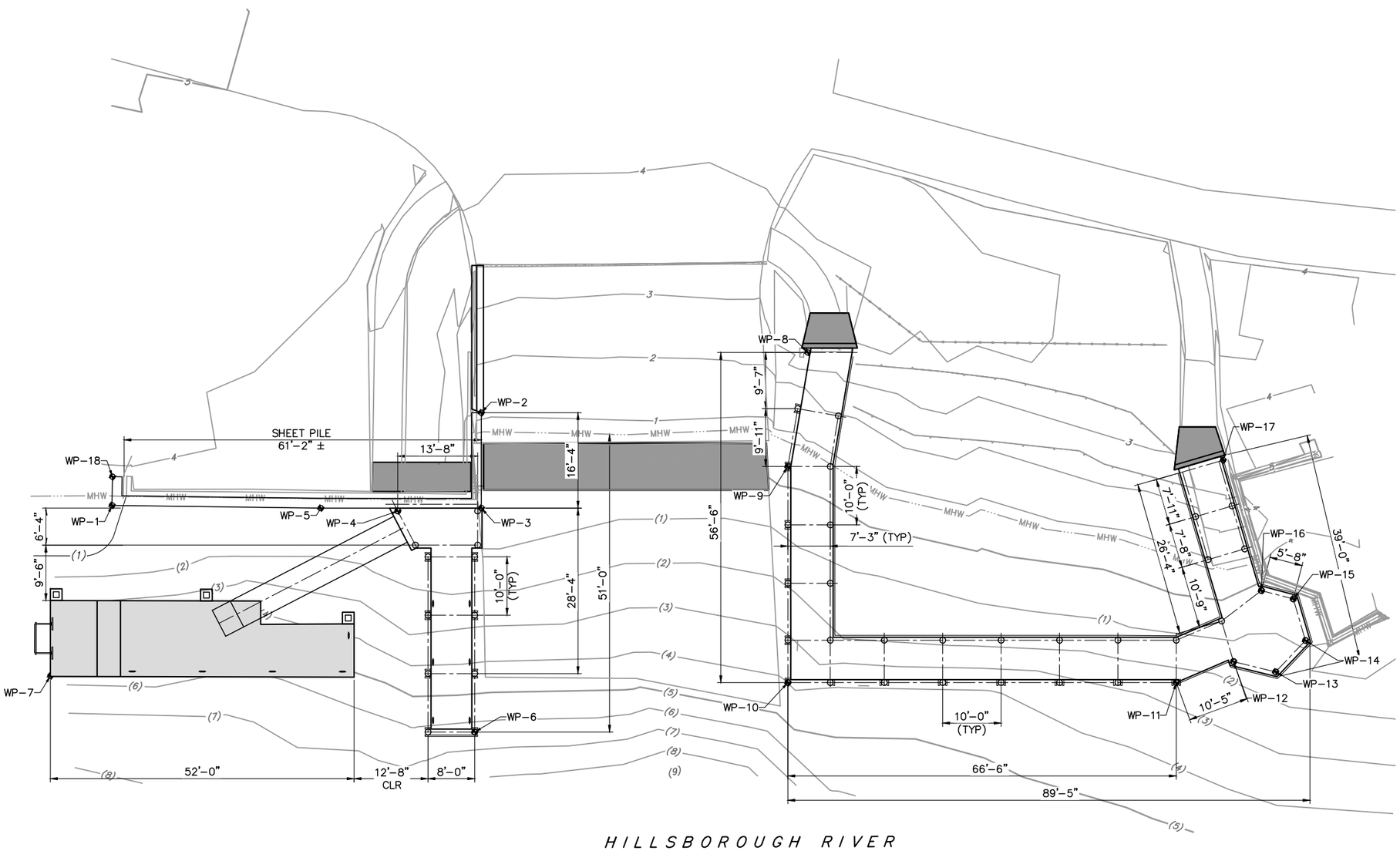

10' 0' 10' 20'

SCALE: 1"=10'

100% SUBMITTAL
SEPTEMBER 13, 2018
NOT TO BE USED FOR CONSTRUCTION

CITY OF TAMPA FLORIDA ORGANIZED JULY 15 1887

Mark	Description	Date	Appr.

LOWRY PARK DOCK AND BOARDWALK IMPROVEMENTS

NORTH AND SOUTH DOCK GEOMETRY PLAN

Designed by: IWC
Dwn by: JAD
Ckd by: IWC
Reviewed by: DCM
Submitted by: MACPHERSON, DEBORAH MOFFATT & NICHOL
Date: 2018–05–18
M&N Project No. 96678–01
Drawing code:
Drawing Scale:
Plot scale: 1:1 (0 SHEET)
Rev. –

501 EAST KENNEDY BLVD
SUITE 1910
TAMPA, FLORIDA 33602
moffatt & nichol

SEAL

Sheet Reference No.
S-101
INDEX: 11 OF 33

File: Q:\TA\96678-01\cadd_Active_lowrypark\967801-LP_S-101; Plotted: 10/31/2018 4:03 PM by SMITH, ANTHONY R.; Saved: 8/29/2018 3:01 PM by TALSTON

DRAWING SCALES SHOWN BASED ON 22"x34" DRAWING

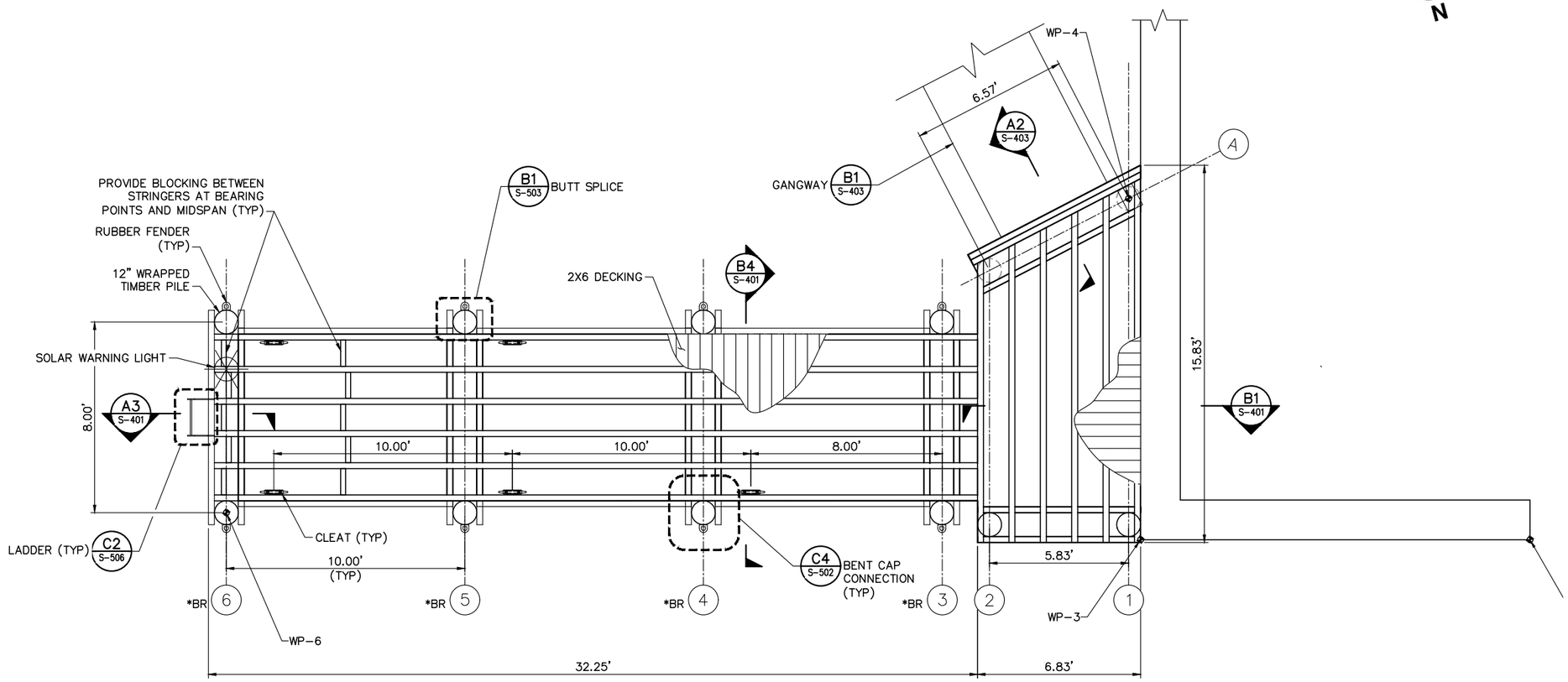

B3 S-100 SOUTH DOCK ENLARGED FRAMING PLAN
SCALE: 3/8"=1'-0"

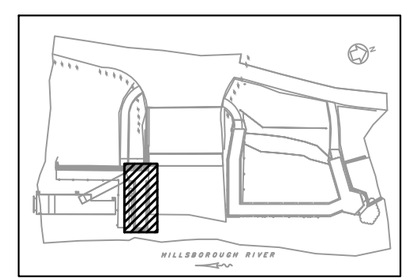

NOTES

1. *BR INDICATES CROSS BRACING.

4' 0'-0" 2' 4'
SCALE: 3/8"=1'-0"

100% SUBMITTAL
SEPTEMBER 13, 2018
NOT TO BE USED FOR CONSTRUCTION

CITY OF TAMPA FLORIDA ORGANIZED JULY 15 1887

Mark	Description	Date	Appr.

LOWRY PARK DOCK AND BOARDWALK IMPROVEMENTS

ENLARGED FRAMING PLAN SOUTH DOCK

moffatt & nichol
501 EAST KENNEDY BLVD
SUITE 1310
TAMPA, FLORIDA 33602

Designed by: IWC
Dwn by: JAD
Ckd by: IWC
Reviewed by: DCM
Submitted by: MACPHERSON, DEBORAH MOFFATT & NICHOL
Date: 2018-05-18
Rev. -
M&N Project No. 9678-01
Drawing code:
Drawing Scale:
Plot scale: 1:1 (0 SHEET)

SEAL

Sheet Reference No.
S-102
INDEX: 12 OF 33

File: Q:\TA\9678-01\cadd_Active_lowrypark\967801-LP_S-102; Plotted: 10/31/2018 4:03 PM by SMITH, ANTHONY R.; Saved: 8/28/2018 11:59 AM by TALSTON

DRAWING SCALES SHOWN BASED ON 22"x34" DRAWING

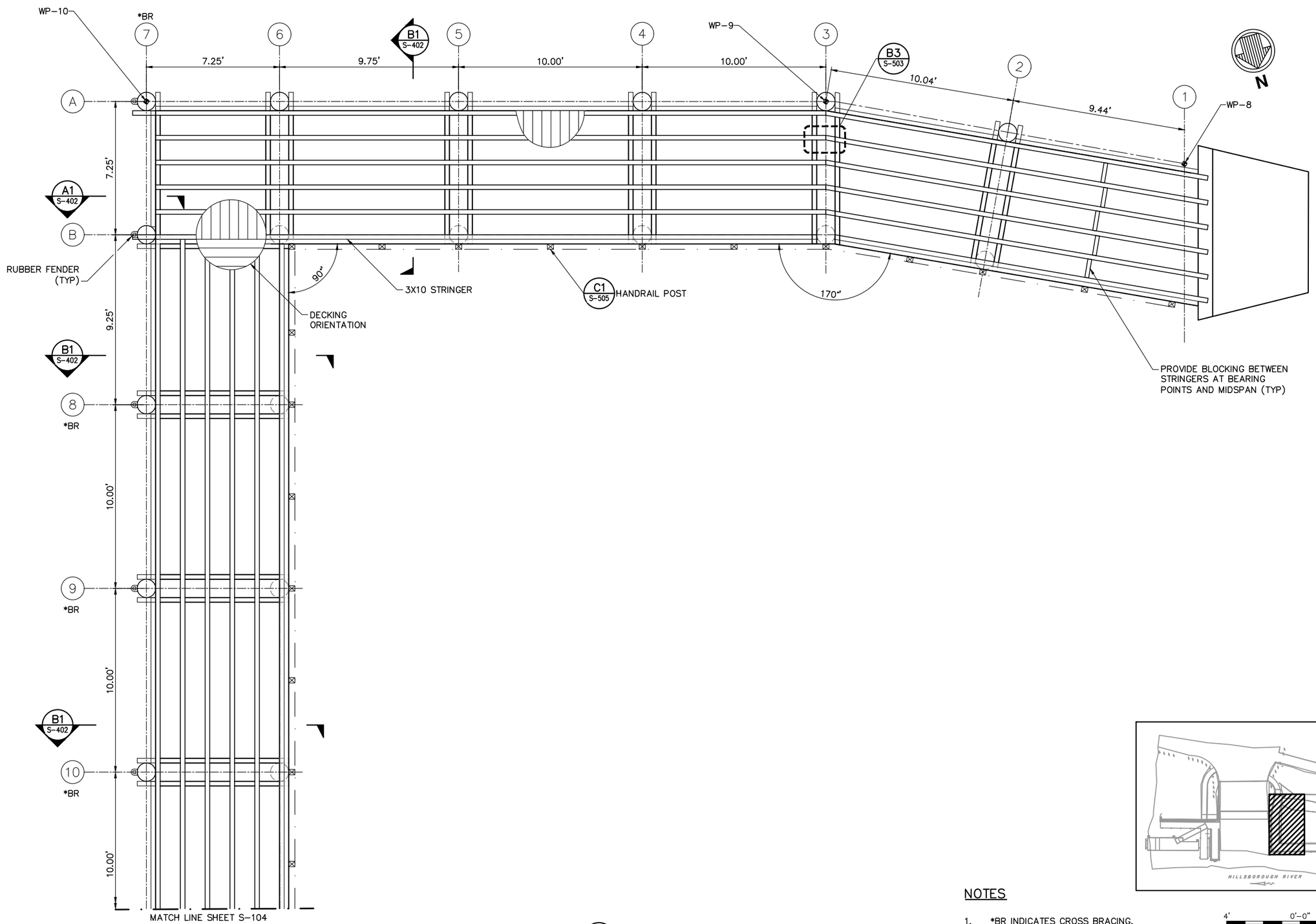

A3 / S-100 NORTH DOCK ENLARGED FRAMING PLAN (1 OF 2)
SCALE: 3/8" = 1' - 0"

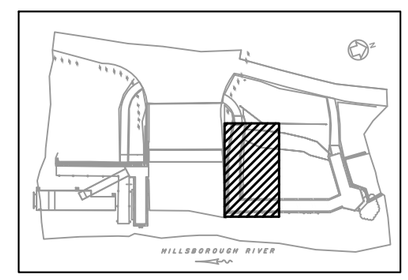

NOTES

1. *BR INDICATES CROSS BRACING.

4' 0'-0" 2' 4'
SCALE: 3/8"=1'-0"

100% SUBMITTAL
SEPTEMBER 13, 2018
NOT TO BE USED FOR CONSTRUCTION

CITY OF TAMPA FLORIDA ORGANIZED JULY 15 1887

Mark	Description	Date	Appr.

LOWRY PARK DOCK AND BOARDWALK IMPROVEMENTS

ENLARGED FRAMING PLAN NORTH DOCK (1 OF 2)

Designed by: IWC
Dwn by: JAD
Ckd by: IWC
Reviewed by: DCM
Submitted by: MACPHERSON, DEBORAH MOFFATT & NICHOL
Date: 2018-05-18
Rev. -
M&N Project No. 9678-01
Drawing code:
Drawing Scale:
Plot scale: 1:1 (D SHEET)

moffatt & nichol
501 EAST KENNEDY BLVD
SUITE 1910
TAMPA, FLORIDA 33602

SEAL

Sheet Reference No.
S-103
INDEX: 13 OF 33

File: Q:\TA\9678-01\cadd_Active_lowrpark\967801-LP_S-103; Plotted: 10/31/2018 4:03 PM by SMITH, ANTHONY R.; Saved: 9/6/2018 1:31 PM by TALSTON

DRAWING SCALES SHOWN BASED ON 22"x34" DRAWING

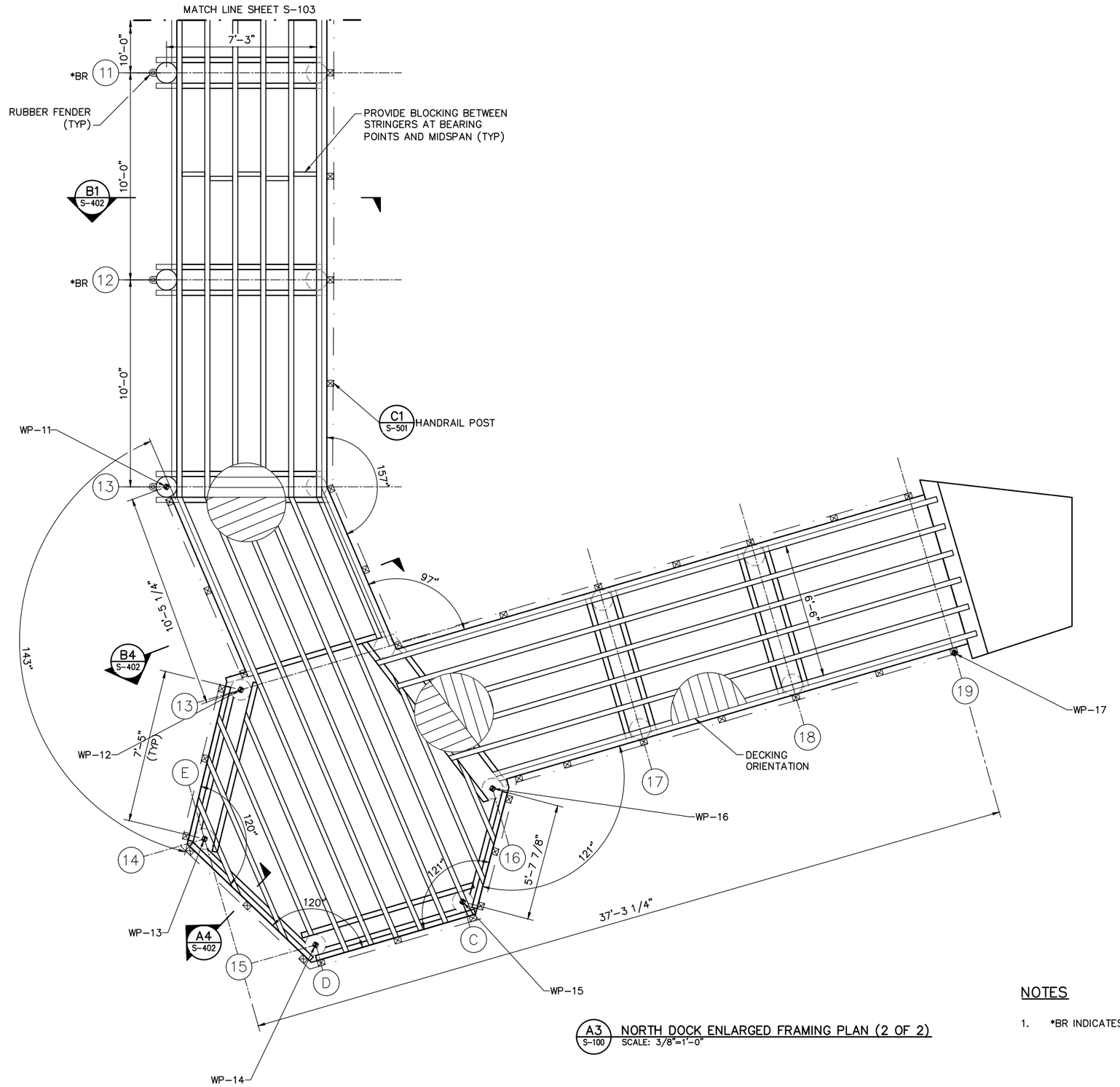

A3 S-100 NORTH DOCK ENLARGED FRAMING PLAN (2 OF 2)
SCALE: 3/8"=1'-0"

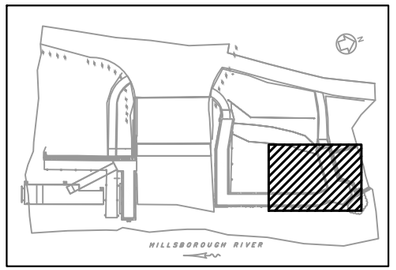

NOTES

1. *BR INDICATES CROSS BRACING.

4' 0'-0" 2' 4'
SCALE: 3/8"=1'-0"

100% SUBMITTAL
SEPTEMBER 13, 2018
NOT TO BE USED FOR CONSTRUCTION

CITY OF TAMPA FLORIDA ORGANIZED JULY 15 1887

Mark	Description	Date	Appr.

LOWRY PARK DOCK AND BOARDWALK IMPROVEMENTS

ENLARGED FRAMING PLAN NORTH DOCK (2 OF 2)

Designed by: IWC
Dwn by: JAD
Ckd by: IWC
Reviewed by: DCM
Submitted by: MACPHERSON, DEBORAH MOFFATT & NICHOL
Date: 2018-05-18
Rev. -
M&N Project No. 9678-01
Drawing code:
Drawing Scale:
Plot scale: 1:1 (D SHEET)

moffatt & nichol
501 EAST KENNEDY BLVD
SUITE 1910
TAMPA, FLORIDA 33602

SEAL

Sheet Reference No.
S-104
INDEX: 14 OF 33

File: Q:\TA\9678-01\cadd_Active_lowrypark\967801-LP_104; Plotted: 10/31/2018 4:03 PM by SMITH, ANTHONY R.; Saved: 9/6/2018 1:43 PM by TALSTON

DRAWING SCALES SHOWN BASED ON 22"x34" DRAWING

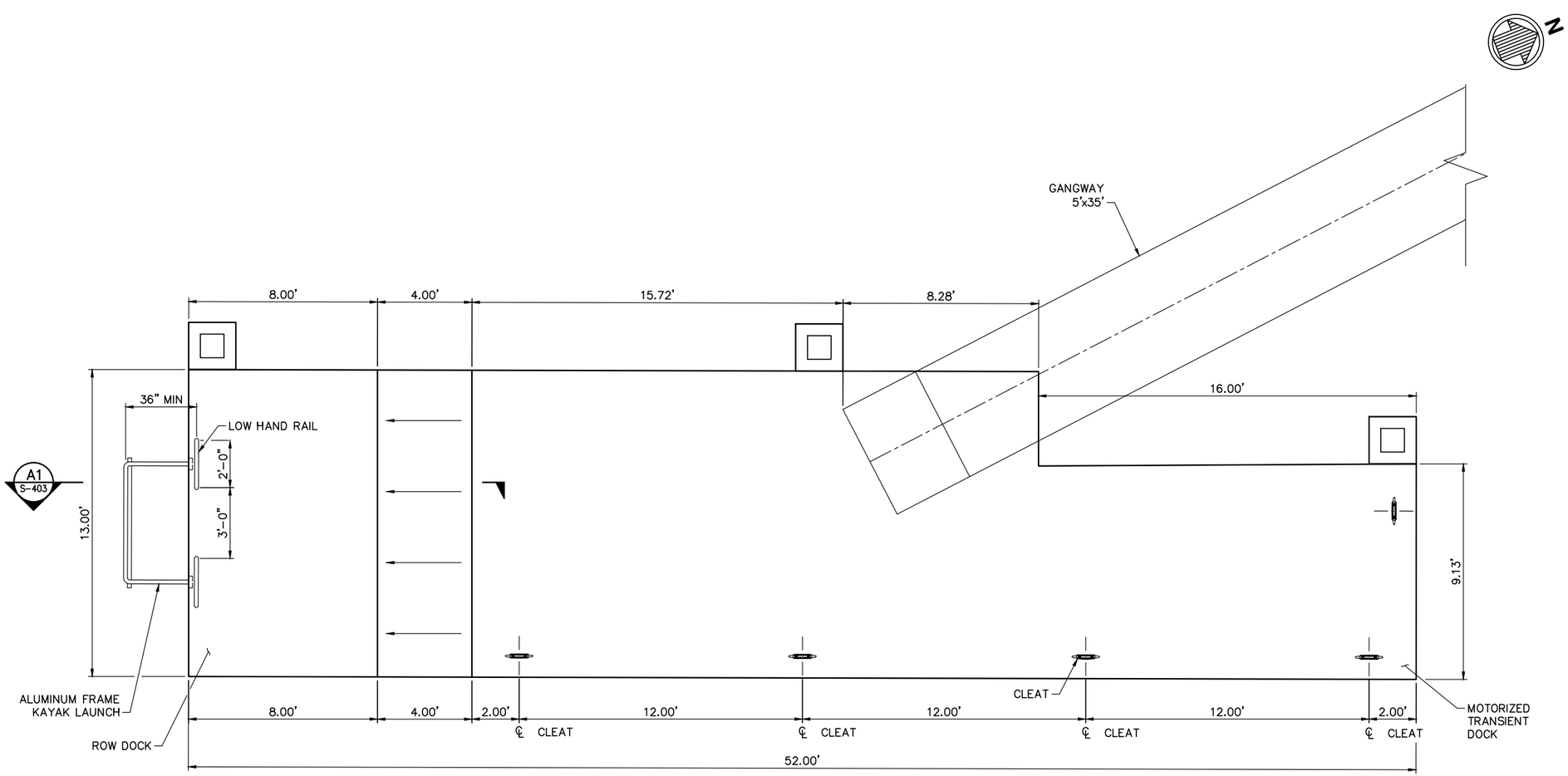

A3 S-100 FLOATING DOCK PLAN
SCALE: 3/8"=1'-0"

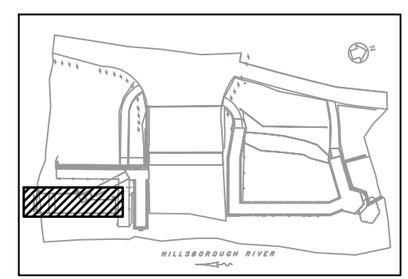

4' 0'-0" 2' 4'
SCALE: 3/8"=1'-0"

100% SUBMITTAL
SEPTEMBER 13, 2018
NOT TO BE USED FOR CONSTRUCTION

Mark	Description	Date	Appr.

LOWRY PARK DOCK AND BOARDWALK IMPROVEMENTS

ENLARGED PLAN FLOATING DOCK

Designed by: IWC
Dwn by: JAD
Cad by: IWC
Reviewed by: DCM
Submitted by: MACPHERSON, DEBORAH MOFFATT & NICHOL
Date: 2018-05-18
M&N Project No. 9678-01
Drawing code:
Drawing Scale:
Plot scale: 1:1 (0 SHEET)
Rev. -

moffatt & nichol
501 EAST KENNEDY BLVD
SUITE 1910
TAMPA, FLORIDA 33602

SEAL

Sheet Reference No.
S-105
INDEX: 15 OF 33

File: Q:\TA\9678-01\cadd_Active_lowrypark\967801-LP_S-105; Plotted: 10/31/2018 4:03 PM by SMITH, ANTHONY R.; Saved: 8/30/2018 2:27 PM by MCOKER

DRAWING SCALES SHOWN BASED ON 22"x34" DRAWING

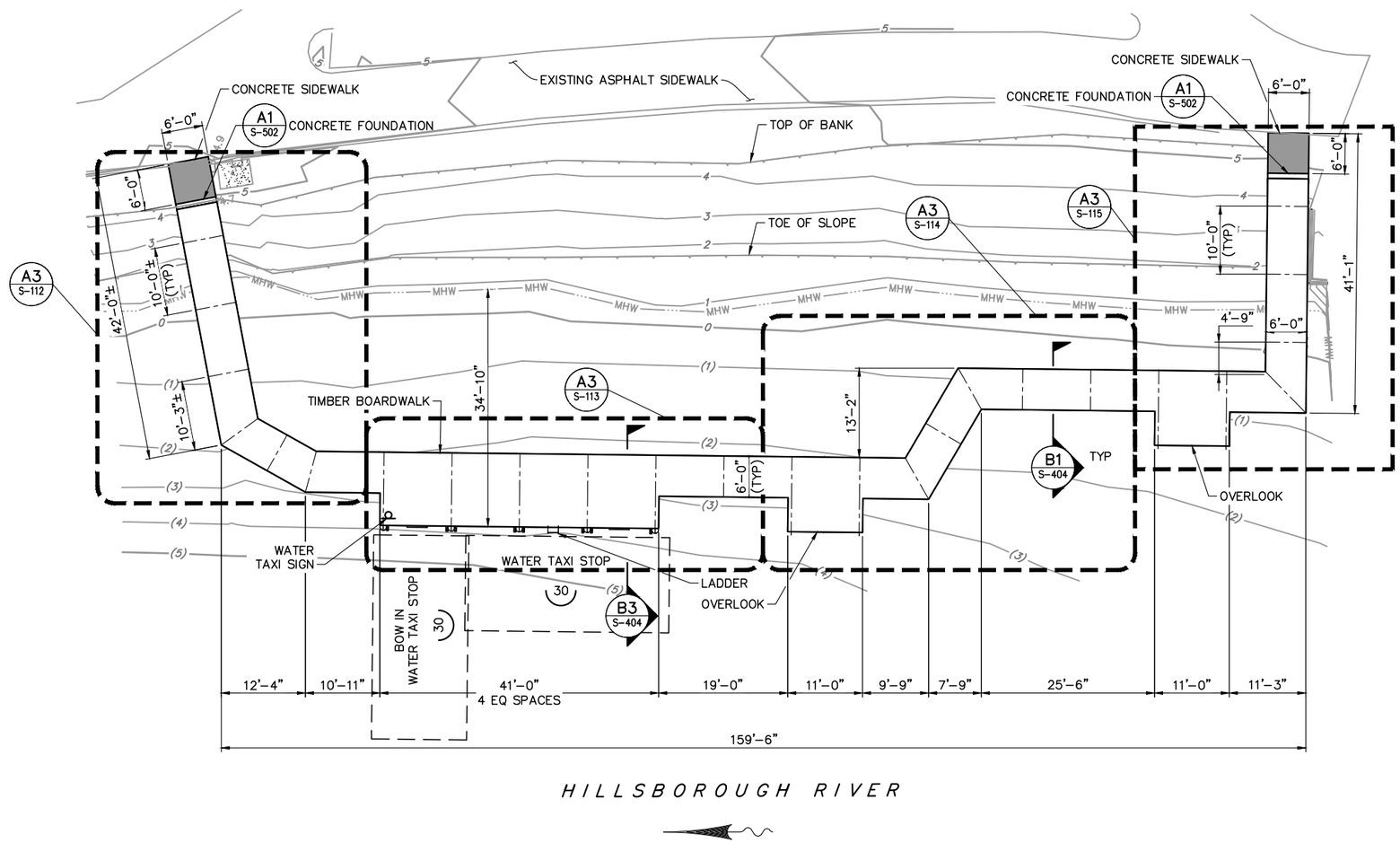

10' 0' 10' 20'

SCALE: 1"=10'

100% SUBMITTAL
SEPTEMBER 13, 2018
NOT TO BE USED FOR CONSTRUCTION

CITY OF TAMPA FLORIDA ORGANIZED JULY 15 1887

Mark	Description	Date	Appr.

LOWRY PARK DOCK AND BOARDWALK IMPROVEMENTS

BOARDWALK LAYOUT PLAN

Date: 2018-05-18 | Rev. –
M&N Project No. 9678-01
Drawing code:
Drawing Scale:
Plot scale: 1:1 (0 SHEET)

Designed by: IWC
Cad by: IWC
Dwn by: JAD
Reviewed by: DCM
Submitted by: MACPHERSON, DEBORAH MOFFATT & NICHOL

moffatt & nichol
501 EAST KENNEDY BLVD
SUITE 1310
TAMPA, FLORIDA 33602

SEAL

Sheet Reference No.
S-110
INDEX: 16 OF 33

File: Q:\TA\9678-01\cadd_Active_lowrypark\967801-LP_S-110; Plotted: 10/31/2018 4:04 PM by SMITH, ANTHONY R.; Saved: 8/30/2018 2:13 PM by TALSTON

DRAWING SCALES SHOWN BASED ON 22"x34" DRAWING

NOTES

1. COORDINATE SYSTEM, NAD83 FLORIDA STATE PLANES, WEST ZONE, US FOOT.

WORKING POINTS TABLE		
POINT	N	E
WP–19	1337993.7022	506208.5971
WP–20	1337991.2165	506243.8820
WP–21	1338001.0677	506253.5757
WP–22	1338088.8186	506278.5993
WP–23	1338099.8050	506267.9622
WP–23	1338099.8050	506267.9622
WP–24	1338145.4747	506280.9154

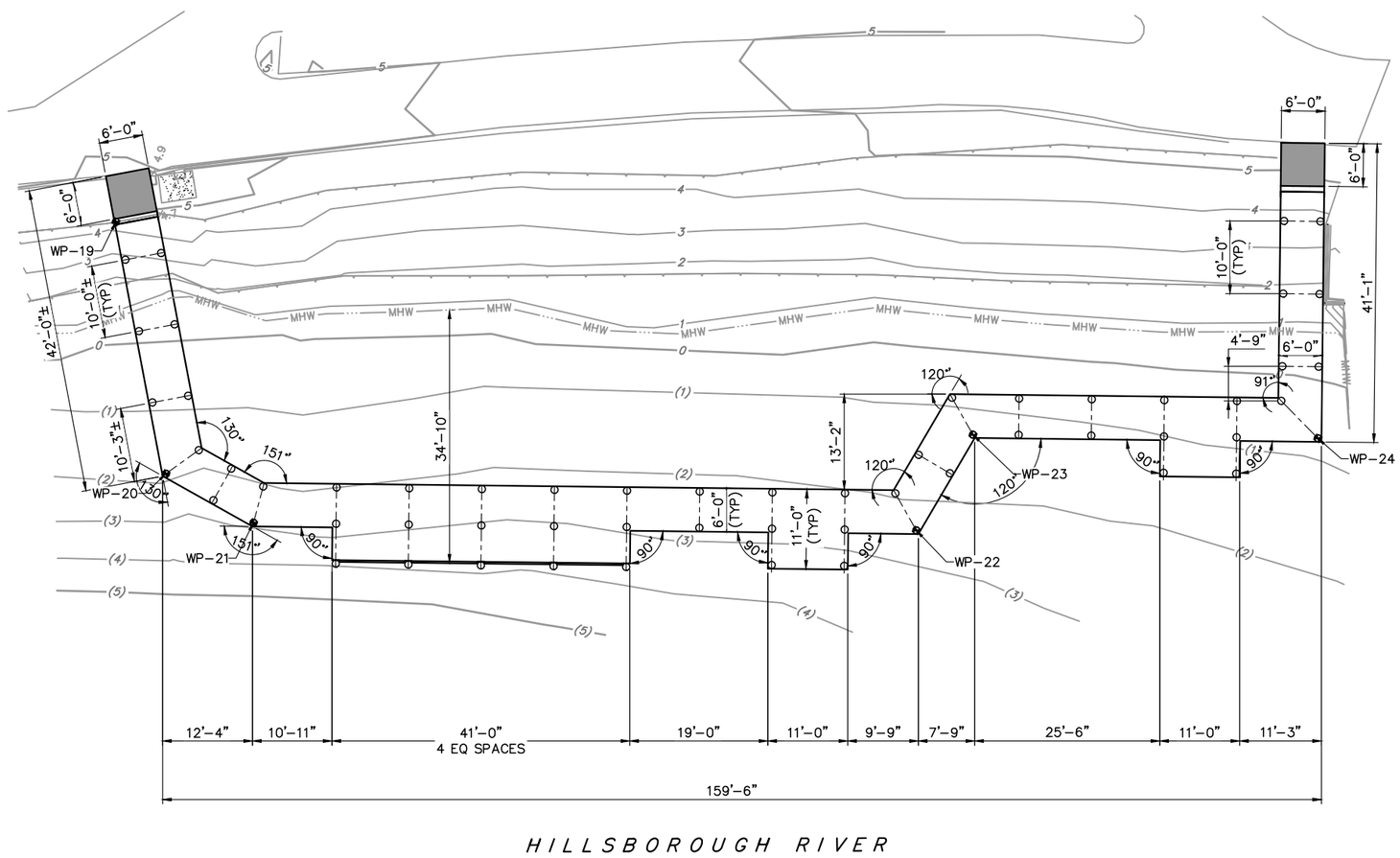

10' 0' 10' 20'

SCALE: 1"=10'

100% SUBMITTAL
SEPTEMBER 13, 2018
NOT TO BE USED FOR CONSTRUCTION

Mark	Description	Date	Appr.

LOWRY PARK DOCK AND BOARDWALK IMPROVEMENTS

BOARDWALK GEOMETRY PLAN

Designed by: IWC
Dwn by: JAD
Ckd by: IWC
Reviewed by: DCM
Submitted by: MACPHERSON, DEBORAH MOFFATT & NICHOL
Date: 2018–05–18
Rev. –
M&N Project No. 9678–01
Drawing code:
Drawing Scale:
Plot scale: 1:1 (0 SHEET)

moffatt & nichol
501 EAST KENNEDY BLVD
SUITE 1910
TAMPA, FLORIDA 33602

SEAL

Sheet Reference No.
S-111
INDEX: 17 OF 33

File: Q:\TA\9678-01\cadd_Active_lowrypark\967801-LP_S-111; Plotted: 10/31/2018 4:04 PM by SMITH, ANTHONY R.; Saved: 8/29/2018 3:02 PM by TALSTON

DRAWING SCALES SHOWN BASED ON 22"x34" DRAWING

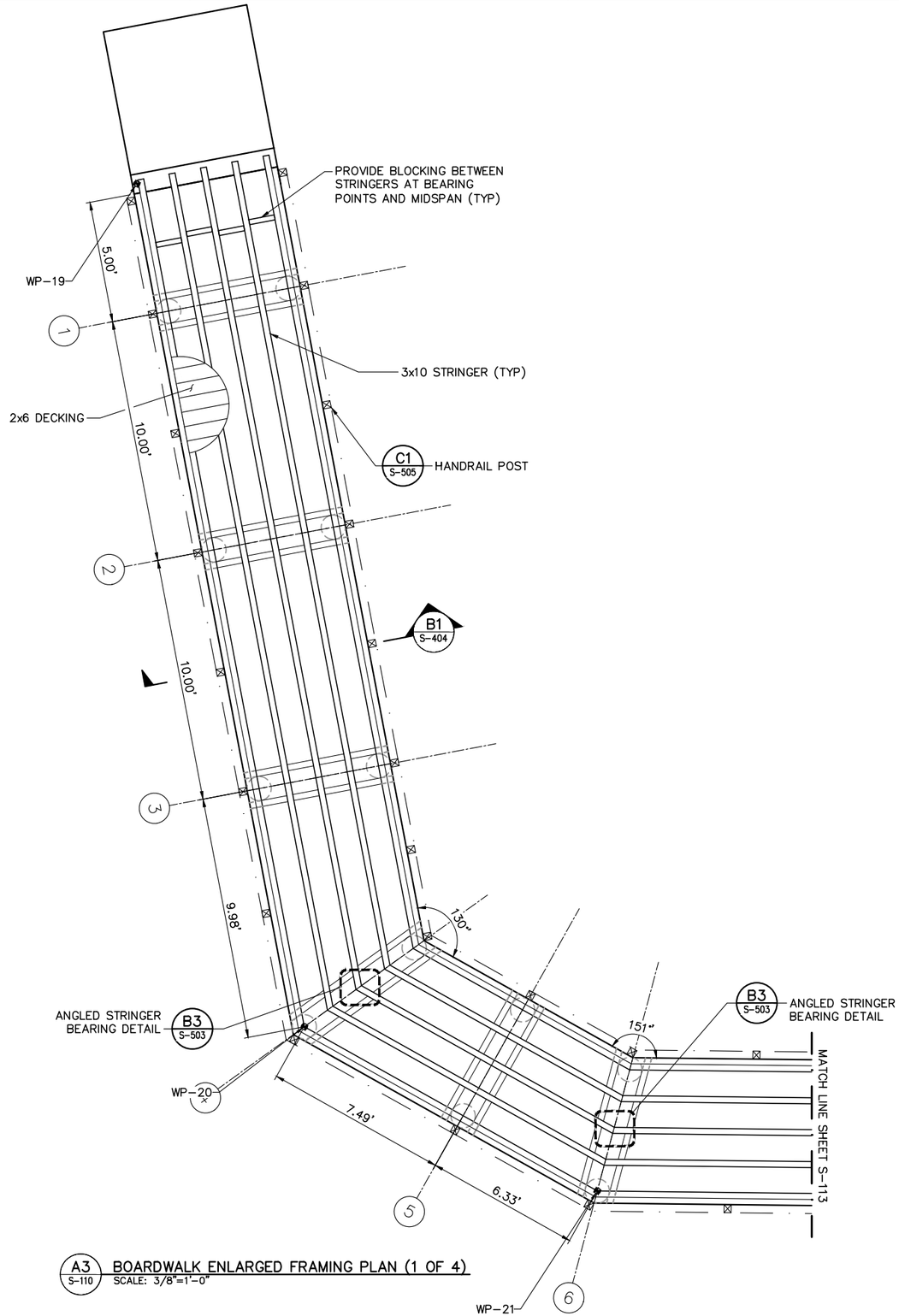

A3 S-110 BOARDWALK ENLARGED FRAMING PLAN (1 OF 4)
SCALE: 3/8"=1'-0"

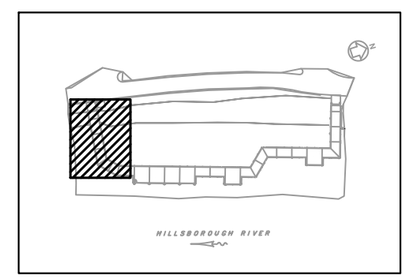

4' 0'-0" 2' 4'
SCALE: 3/8"=1'-0"

100% SUBMITTAL
SEPTEMBER 13, 2018
NOT TO BE USED FOR CONSTRUCTION

CITY OF TAMPA FLORIDA
ORGANIZED JULY 15, 1887

Mark	Description	Date	Appr.

LOWRY PARK DOCK AND BOARDWALK IMPROVEMENTS

ENLARGED PLAN BOARDWALK (1 OF 4)

moffatt & nichol
501 EAST KENNEDY BLVD
SUITE 1910
TAMPA, FLORIDA 33602

Designed by: IWC		Date: 2018-05-18	Rev. -
Dwn by: JAD	Cad by: IWC	M&N Project No. 9678-01	
Reviewed by: DCM		Drawing code:	
Submitted by: MACPHERSON, DEBORAH MOFFATT & NICHOL		Drawing Scale: Plot scale: 1:1 (0 SHEET)	

SEAL

Sheet Reference No.
S-112
INDEX: 18 OF 33

File: Q:\TA\9678-01\cadd_Active_lowrypark\967801-LP_S-112; Plotted: 10/31/2018 4:04 PM by SMITH, ANTHONY R.; Saved: 9/10/2018 5:39 PM by JJORDAN

DRAWING SCALES SHOWN BASED ON 22"x34" DRAWING

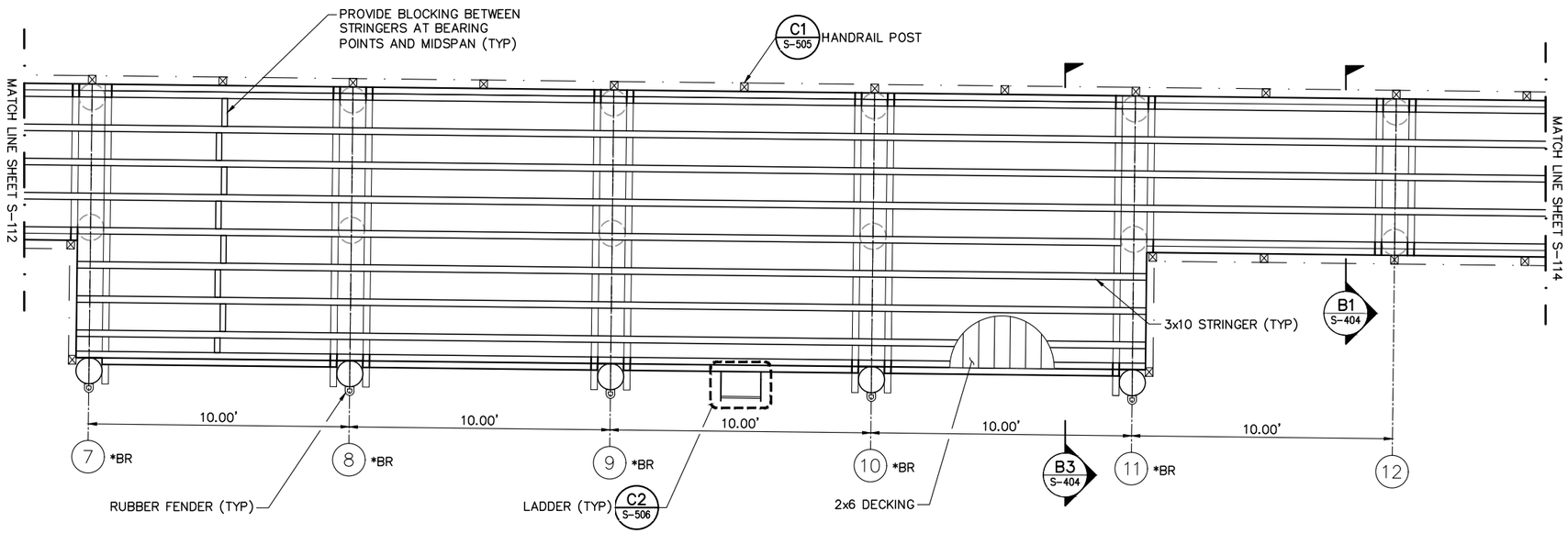

A3 S-110 BOARDWALK ENLARGED FRAMING PLAN (2 OF 4)
SCALE: 3/8"=1'-0"

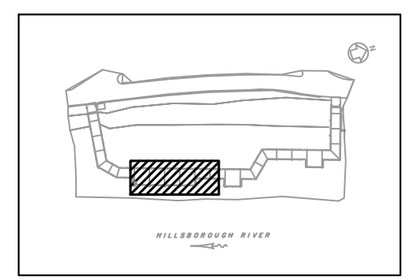

NOTES

1. *BR INDICATES CROSS BRACING.

4' 0'-0" 2' 4'
SCALE: 3/8"=1'-0"

100% SUBMITTAL
SEPTEMBER 13, 2018
NOT TO BE USED FOR CONSTRUCTION

CITY OF TAMPA FLORIDA ORGANIZED JULY 15 1887

Mark	Description	Date	Appr.

LOWRY PARK DOCK AND BOARDWALK IMPROVEMENTS

ENLARGED PLAN BOARDWALK (2 OF 4)

moffatt & nichol
501 EAST KENNEDY BLVD
SUITE 1310
TAMPA, FLORIDA 33602

Designed by: IWC		Date: 2018-05-18	Rev. –
Dwn by: JAD	Ckd by: IWC	M&N Project No. 9678-01	
Reviewed by: DCM		Drawing code:	
Submitted by: MACPHERSON, DEBORAH MOFFATT & NICHOL		Drawing Scale: Plot scale: 1:1 (0 SHEET)	

SEAL

Sheet Reference No.
S-113
INDEX: 19 OF 33

File: Q:\TA\9678-01\cadd_Active_lowrypark\967801-LP_S-113; Plotted: 10/31/2018 4:04 PM by SMITH, ANTHONY R.; Saved: 9/6/2018 2:25 PM by TALSTON

DRAWING SCALES SHOWN BASED ON 22"x34" DRAWING

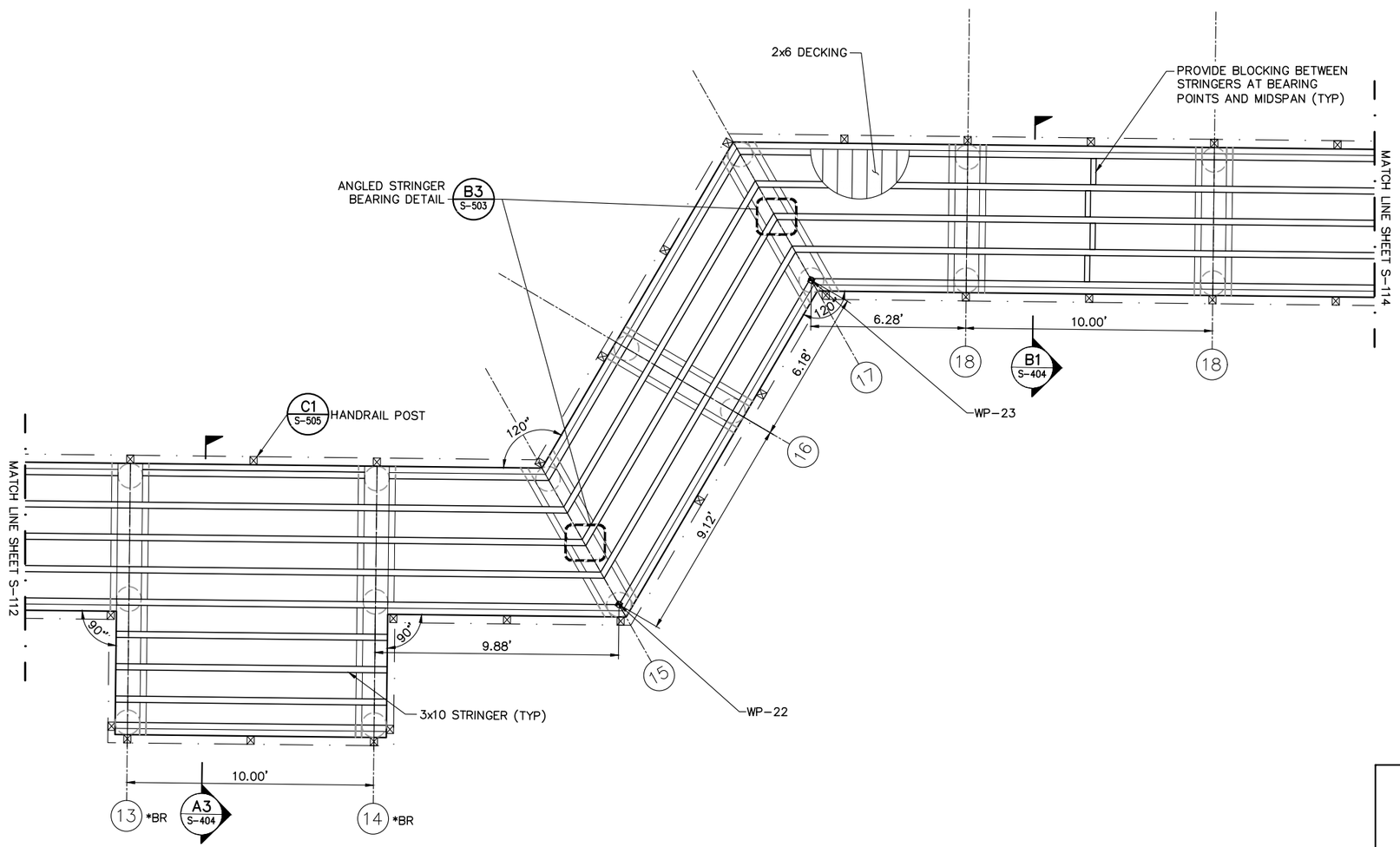

A3 / S-110 BOARDWALK ENLARGED FRAMING PLAN (3 OF 4)
SCALE: 3/8"=1'-0"

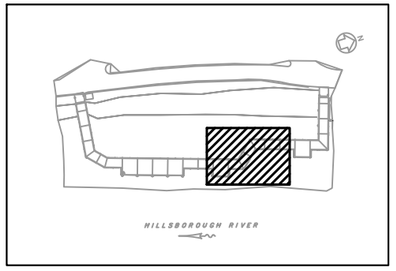

NOTES

1. *BR INDICATES CROSS BRACING.

4' 0'-0" 2' 4'
SCALE: 3/8"=1'-0"

100% SUBMITTAL
SEPTEMBER 13, 2018
NOT TO BE USED FOR CONSTRUCTION

CITY OF TAMPA FLORIDA ORGANIZED JULY 15 1887

Mark	Description	Date	Appr.

LOWRY PARK DOCK AND BOARDWALK IMPROVEMENTS

ENLARGED PLAN BOARDWALK (3 OF 4)

moffatt & nichol
501 EAST KENNEDY BLVD
SUITE 1710
TAMPA, FLORIDA 33602

Designed by: IWC	Cad by: IWC	Date: 2018-05-18
Dwn by: JAD		M&N Project No. 9678-01
Reviewed by: DCM		Drawing code:
Submitted by: MACPHERSON, DEBORAH MOFFATT & NICHOL		Drawing Scale: Plot scale: 1:1 (D SHEET)

Rev. -

SEAL

Sheet Reference No.
S-114
INDEX: 20 OF 33

File: Q:\TA\9678-01\cadd_Active_lowrypark\967801-LP_S-114; Plotted: 10/31/2018 4:04 PM by SMITH, ANTHONY R.; Saved: 9/12/2018 4:13 PM by JJORDAN

DRAWING SCALES SHOWN BASED ON 22"x34" DRAWING

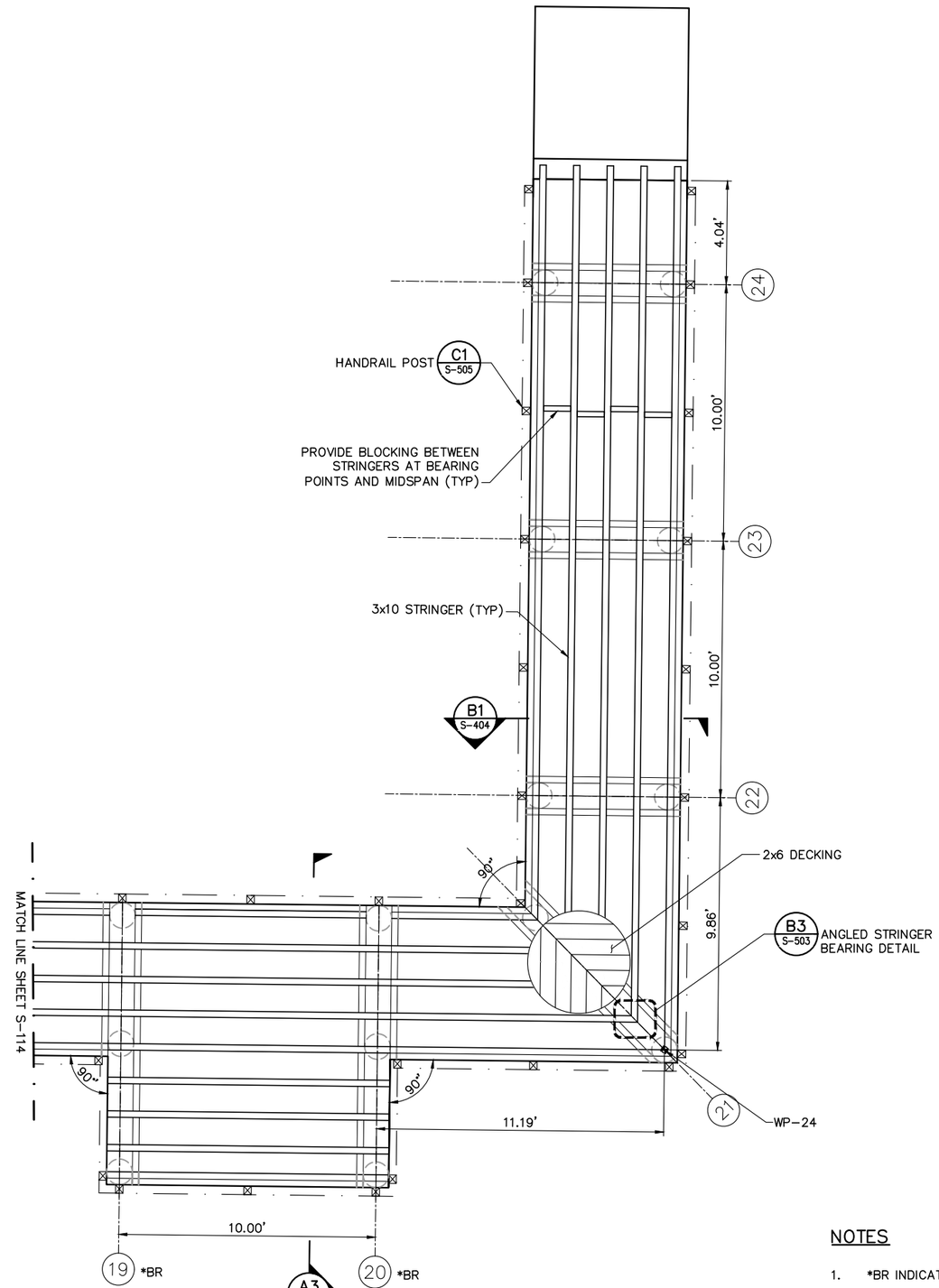

A3 S-110 BOARDWALK ENLARGED FRAMING PLAN (4 OF 4)
SCALE: 3/8"=1'-0"

NOTES

1. *BR INDICATES CROSS BRACING.

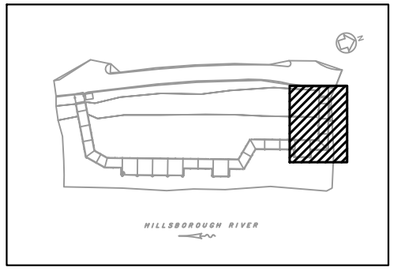

4' 0'-0" 2' 4'
SCALE: 3/8"=1'-0"

100% SUBMITTAL
SEPTEMBER 13, 2018
NOT TO BE USED FOR CONSTRUCTION

CITY OF TAMPA FLORIDA ORGANIZED JULY 15 1887

Mark	Description	Date	Appr.

LOWRY PARK DOCK AND BOARDWALK IMPROVEMENTS

ENLARGED PLAN BOARDWALK (4 OF 4)

Designed by: IWC
Dwn by: JAD
Ckd by: IWC
Reviewed by: DCM
Submitted by: MACPHERSON, DEBORAH MOFFATT & NICHOL
Date: 2018-05-18
Rev. -
M&N Project No. 9678-01
Drawing code:
Drawing Scale:
Plot scale: 1:1 (0 SHEET)

moffatt & nichol
501 EAST KENNEDY BLVD
SUITE 1910
TAMPA, FLORIDA 33602

SEAL

Sheet Reference No.
S-115
INDEX: 21 OF 33

File: Q:\TA\9678-01\cadd_Active_lowrypark\967801-LP_S-115; Plotted: 10/31/2018 4:05 PM by SMITH, ANTHONY R.; Saved: 9/12/2018 4:16 PM by JJORDAN

DRAWING SCALES SHOWN BASED ON 22"x34" DRAWING

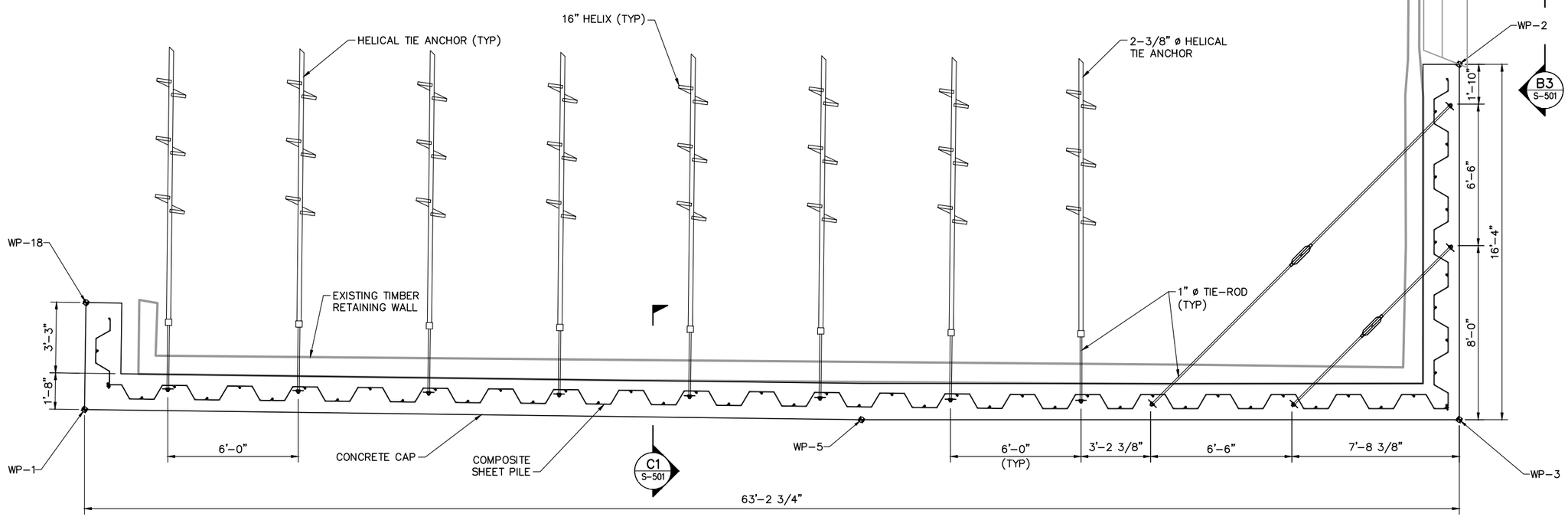

A3 S-100 BULKHEAD PLAN
SCALE: 3/8" = 1'-0"

ITEM	LF
BULKHEAD	84.5

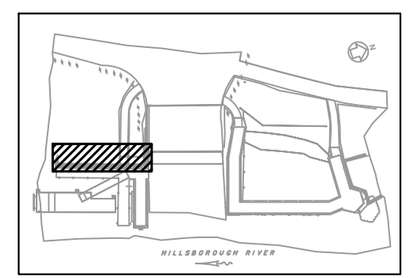

4' 0'-0" 2' 4'
SCALE: 3/8"=1'-0"

100% SUBMITTAL
SEPTEMBER 13, 2018
NOT TO BE USED FOR CONSTRUCTION

CITY OF TAMPA FLORIDA ORGANIZED JULY 15 1887

Mark	Description	Date	Appr.

LOWRY PARK DOCK AND BOARDWALK IMPROVEMENTS

BULKHEAD PLAN

moffatt & nichol
501 EAST KENNEDY BLVD
SUITE 1910
TAMPA, FLORIDA 33602

Designed by: IWC
Dwn by: JAD
Ckd by: IWC
Reviewed by: DCM
Submitted by: MACPHERSON, DEBORAH MOFFATT & NICHOL
Date: 2018-05-18
Rev. -
M&N Project No. 9678-01
Drawing code:
Drawing Scale:
Plot scale: 1:1 (0 SHEET)

SEAL

Sheet Reference No.
S-120
INDEX: 22 OF 33

File: C:\TA\9678-01\cadd_Active_lowrypark\967801-LP_S-120; Plotted: 10/31/2018 4:05 PM by SMITH, ANTHONY R.; Saved: 8/30/2018 3:26 PM by TALSTON

DRAWING SCALES SHOWN BASED ON 22"x34" DRAWING

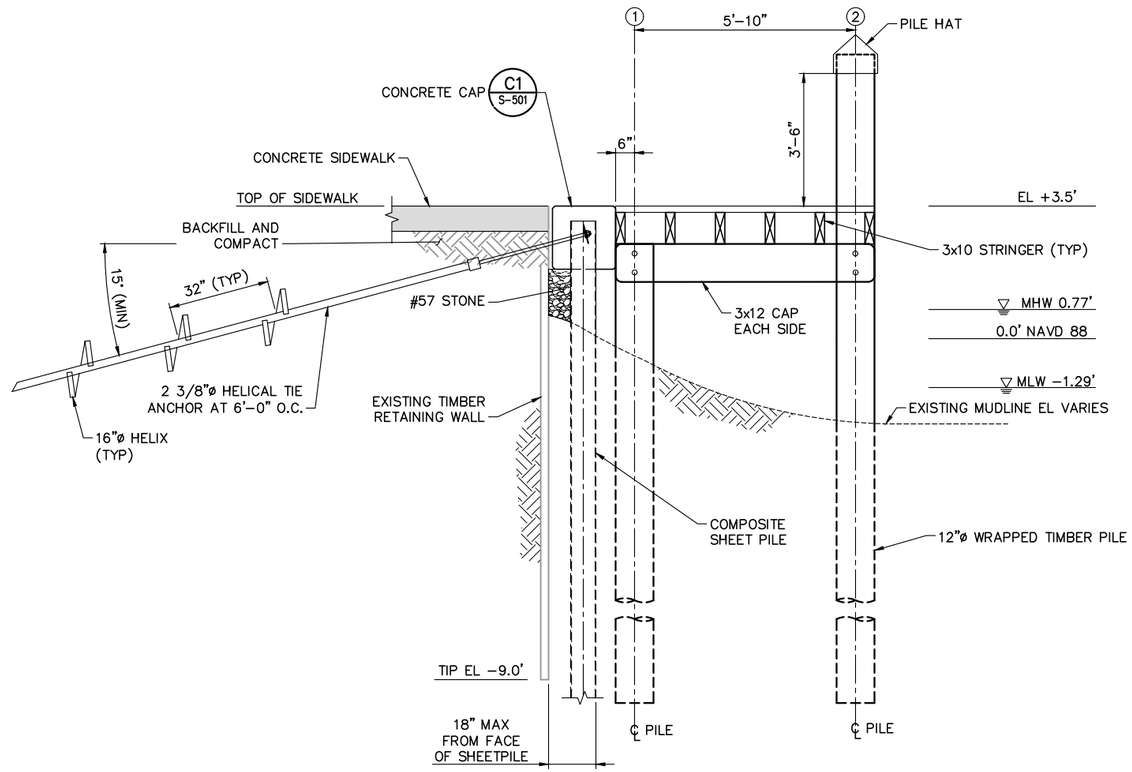

B1 S-102 SOUTH DOCK BULKHEAD
SCALE: 1/2"=1'-0"

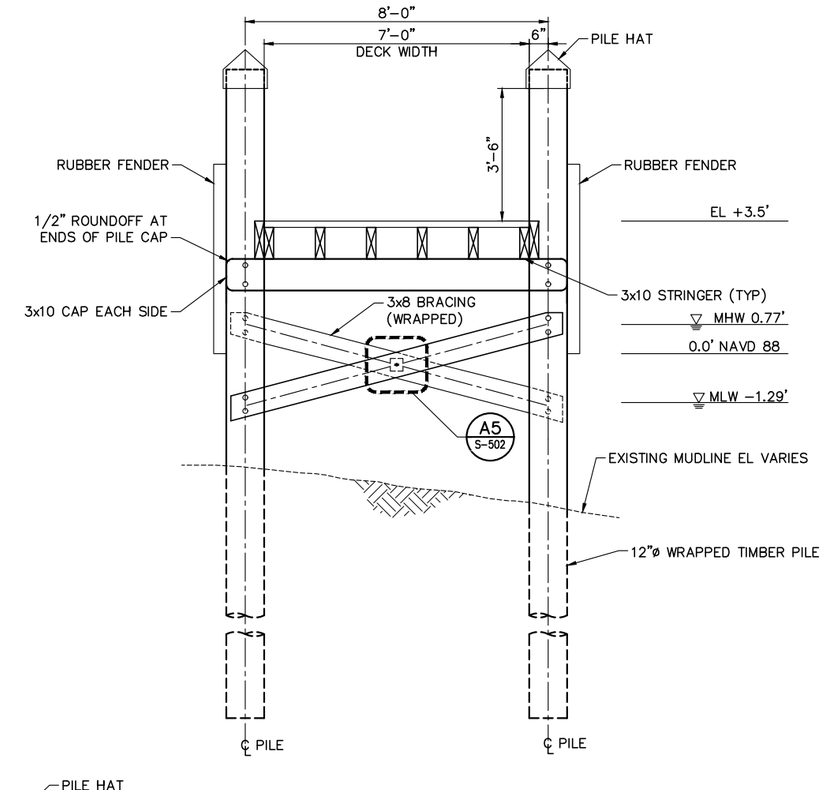

B4 S-102 SOUTH DOCK SECTION
SCALE: 1"=1'-0"

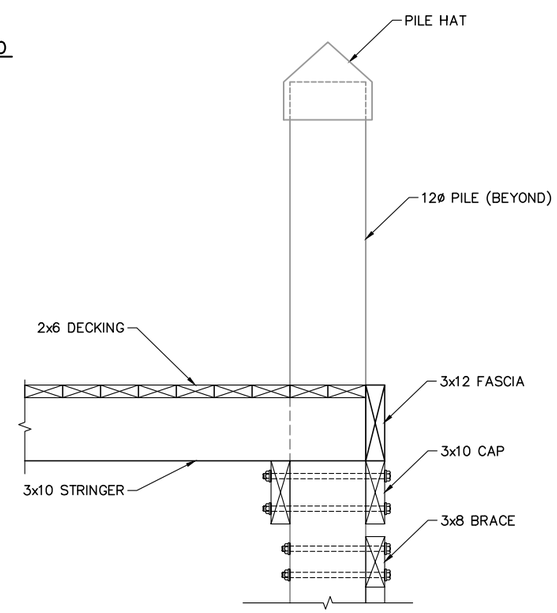

A3 S-102 END OF PIER – SECTION
SCALE: 1"=1'-0"

1'-0" 0'-0" 1'-0" 2'-0"
SCALE: 1"=1'-0"

2' 0'-0" 2' 4'
SCALE: 1/2"=1'-0"

100% SUBMITTAL
SEPTEMBER 13, 2018
NOT TO BE USED FOR CONSTRUCTION

CITY OF TAMPA FLORIDA ORGANIZED JULY 15 1887

Mark	Description	Date	Appr.

LOWRY PARK DOCK AND BOARDWALK IMPROVEMENTS

SOUTH DOCK AND BULKHEAD SECTIONS

moffatt & nichol
501 EAST KENNEDY BLVD
SUITE 1310
TAMPA, FLORIDA 33602

Designed by: IWC
Dwn by: JAD
Ckd by: IWC
Reviewed by: DCM
Submitted by: MACPHERSON, DEBORAH MOFFATT & NICHOL
Date: 2018-05-18
Rev. -
M&N Project No. 9678-01
Drawing code:
Drawing Scale: Plot scale: 1:1 (0 SHEET)

SEAL

Sheet Reference No.
S-401
INDEX: 23 OF 33

File: C:\TA\9678-01\cadd_Active_lowrypark\967801-LP_S-401; Plotted: 10/31/2018 4:05 PM by SMITH, ANTHONY R.; Saved: 8/30/2018 2:26 PM by MCOKER

DRAWING SCALES SHOWN BASED ON 22"x34" DRAWING

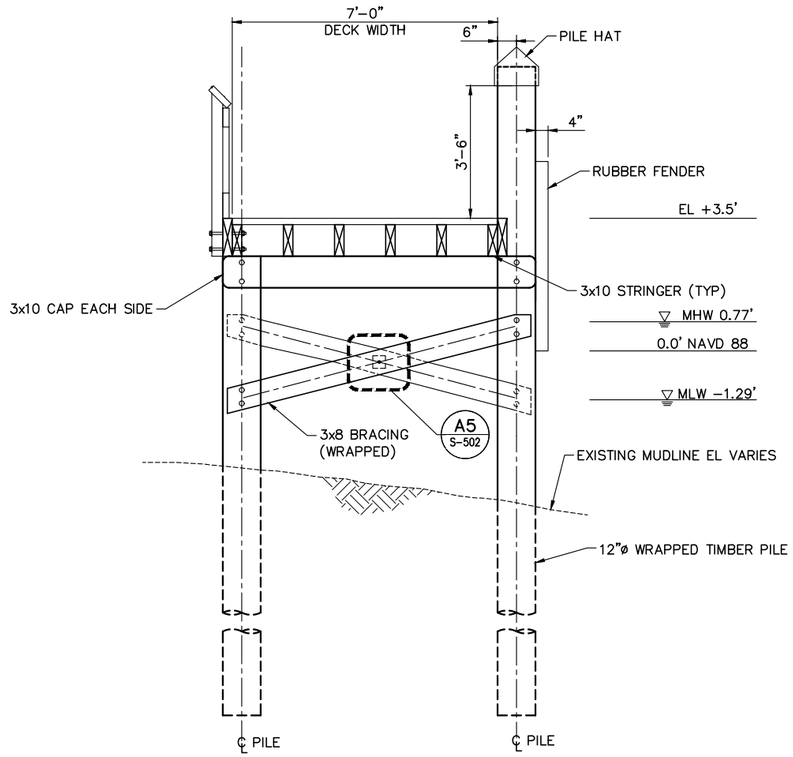

B1 S-103 NORTH DOCK – SECTION
SCALE: 1"=1'-0"
S-104

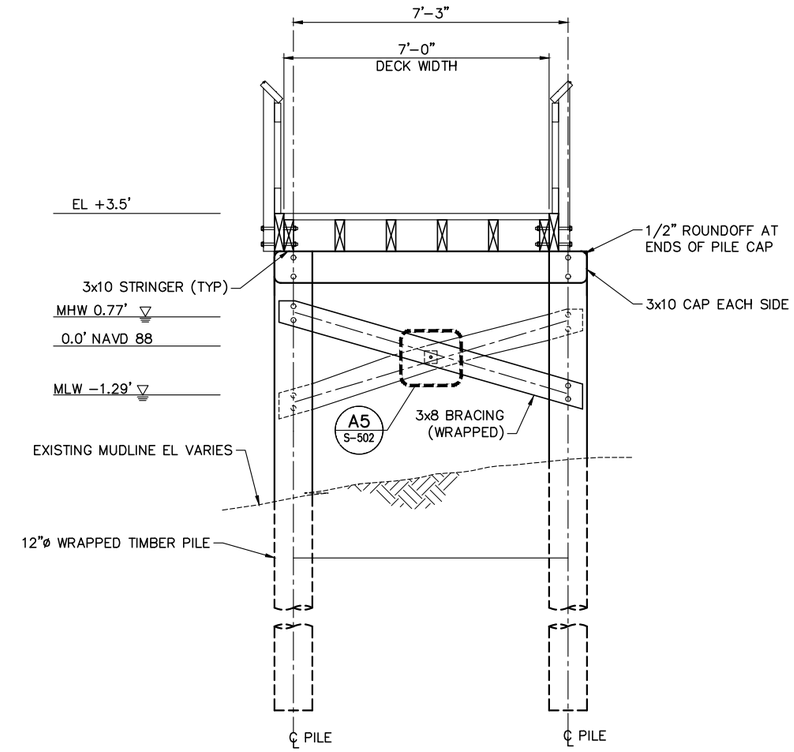

B4 S-104 NORTH DOCK – SECTION
SCALE: 1"=1'-0"

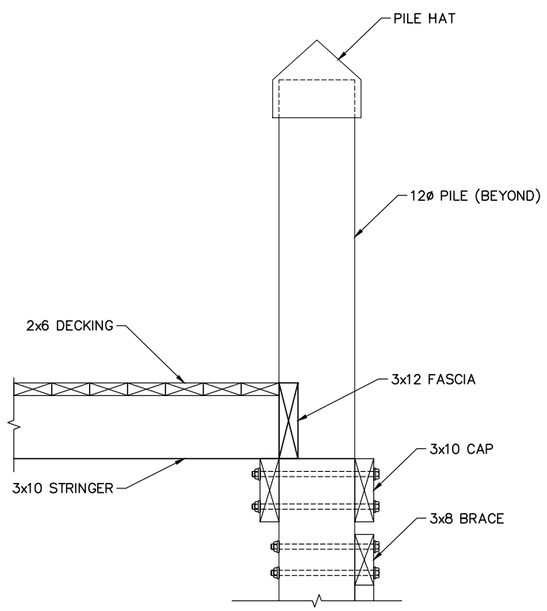

A1 S-103 END OF PIER– SECTION
SCALE: 1"=1'-0"

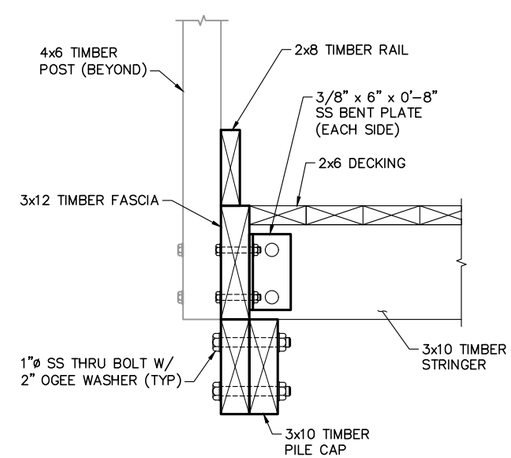

A4 S-402 NORTH DOCK – SECTION
SCALE: 1 1/2" = 1'-0"

1'-0" 0'-0" 1'-0" 2'-0"
SCALE: 1"=1'-0"

1'-0" 0'-0" 6" 1'-0"
SCALE: 1 1/2"=1'-0"

100% SUBMITTAL
SEPTEMBER 13, 2018
NOT TO BE USED FOR CONSTRUCTION

CITY OF TAMPA FLORIDA ORGANIZED JULY 15 1887

Mark	Description	Date	Appr.

LOWRY PARK DOCK AND BOARDWALK IMPROVEMENTS

NORTH DOCK SECTIONS

moffatt & nichol
501 EAST KENNEDY BLVD
SUITE 1310
TAMPA, FLORIDA 33602

Designed by: IWC
Dwn by: JAD
Ckd by: IWC
Reviewed by: DCM
Submitted by: MACPHERSON, DEBORAH MOFFATT & NICHOL
Date: 2018-05-18
Rev. -
M&N Project No. 9678-01
Drawing code:
Drawing Scale:
Plot scale: 1:1 (D SHEET)

SEAL

Sheet Reference No.
S-402
INDEX: 24 OF 33

File: C:\TA\9678-01\cadd_Active_lowrypark\967801-LP_S-402; Plotted: 10/31/2018 4:05 PM by SMITH, ANTHONY R.; Saved: 9/12/2018 2:15 PM by JJORDAN

DRAWING SCALES SHOWN BASED ON 22"x34" DRAWING

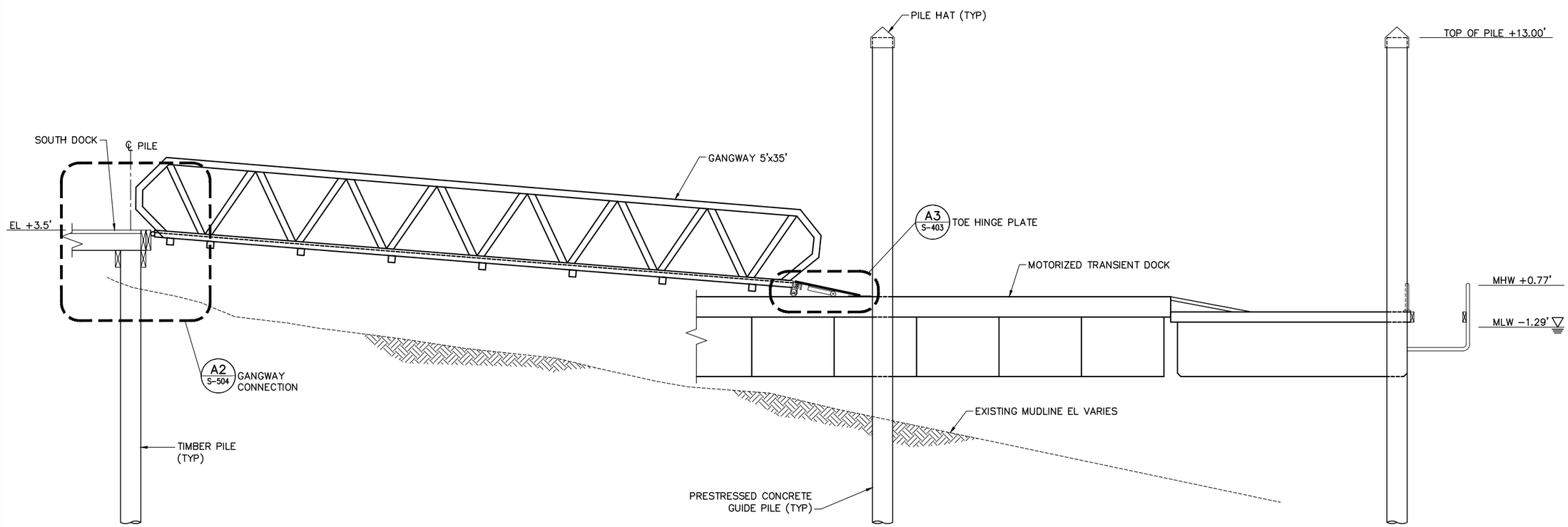

B1 S-100 ELEVATION – FLOATING DOCK
SCALE: 3/8"=1'-0"
S-102

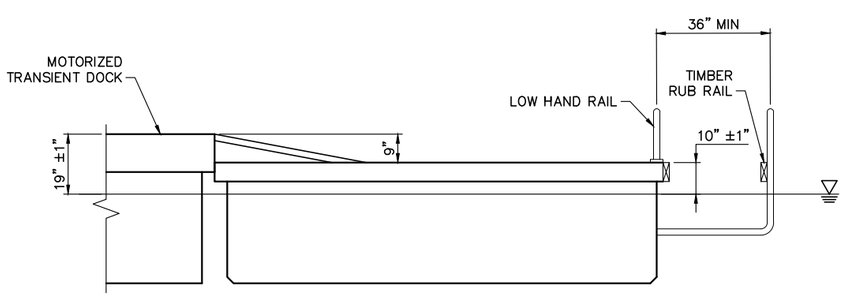

A1 S-105 FLOATING DOCK SECTION
SCALE: 1/2"=1'-0"

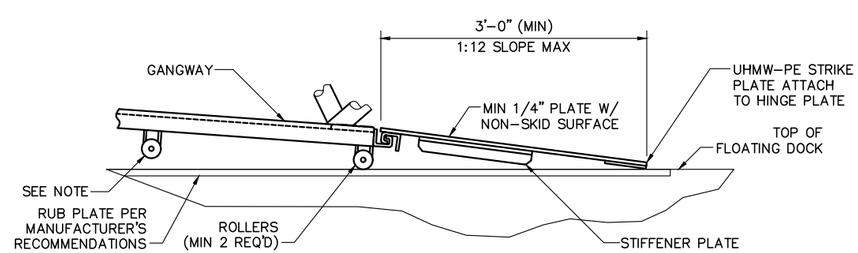

NOTE: CONTRACTOR SHALL PROVIDE A SECONDARY ROLLER/SUPPORT TO ACCOMMODATE HIGH WATER EVENTS.

A3 S-403 TOE HINGE PLATE
SCALE: 3/4"=1'-0"

4' 0'-0" 2' 4'
SCALE: 3/8"=1'-0"

2' 0'-0" 2' 4'
SCALE: 1/2"=1'-0"

2' 0'-0" 1' 2'
SCALE: 3/4"=1'-0"

100% SUBMITTAL
SEPTEMBER 13, 2018
NOT TO BE USED FOR CONSTRUCTION

CITY OF TAMPA FLORIDA ORGANIZED JULY 15, 1887

Mark	Description	Date	Appr.

LOWRY PARK DOCK AND BOARDWALK IMPROVEMENTS

FLOATING DOCK SECTION

Designed by: IWC
Dwn by: JAD
Ckd by: IWC
Reviewed by: DCM
Submitted by: MACPHERSON, DEBORAH MOFFATT & NICHOL
Date: 2018-05-18
Rev. –
M&N Project No. 9678-01
Drawing code:
Drawing Scale:
Plot scale: 1:1 (D SHEET)

moffatt & nichol
501 EAST KENNEDY BLVD
SUITE 1910
TAMPA, FLORIDA 33602

SEAL

Sheet Reference No.
S-403
INDEX: 25 OF 33

File: Q:\TA\9678-01\cadd_Active_lowrpark\967901-LP_S-403; Plotted: 10/31/2018 4:05 PM by SMITH, ANTHONY R.; Saved: 8/30/2018 3:34 PM by TALSTON

DRAWING SCALES SHOWN BASED ON 22"x34" DRAWING

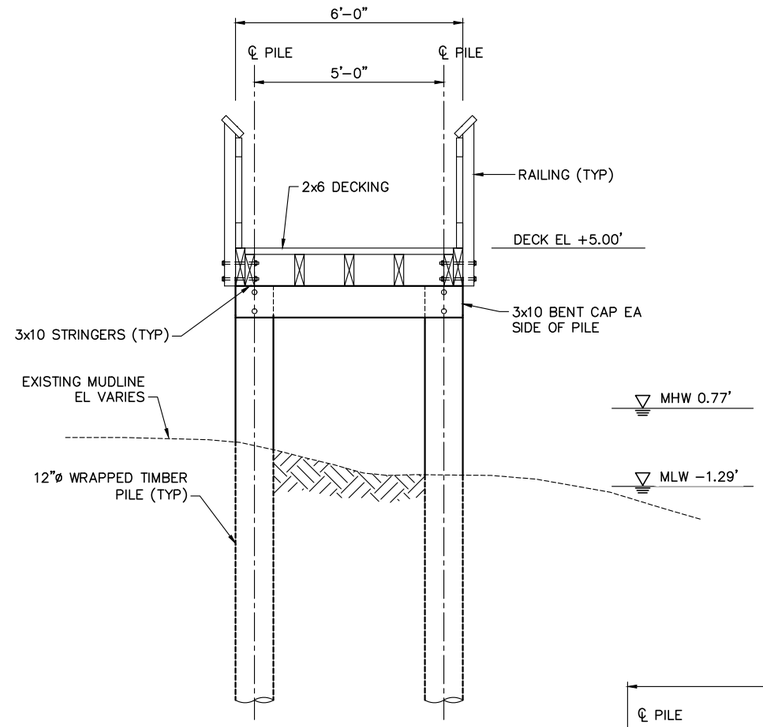

B1 / S-110 TYPICAL BOARDWALK SECTION
SCALE: 1/2"=1'-0"
S-112, S-113, S-114, S-115

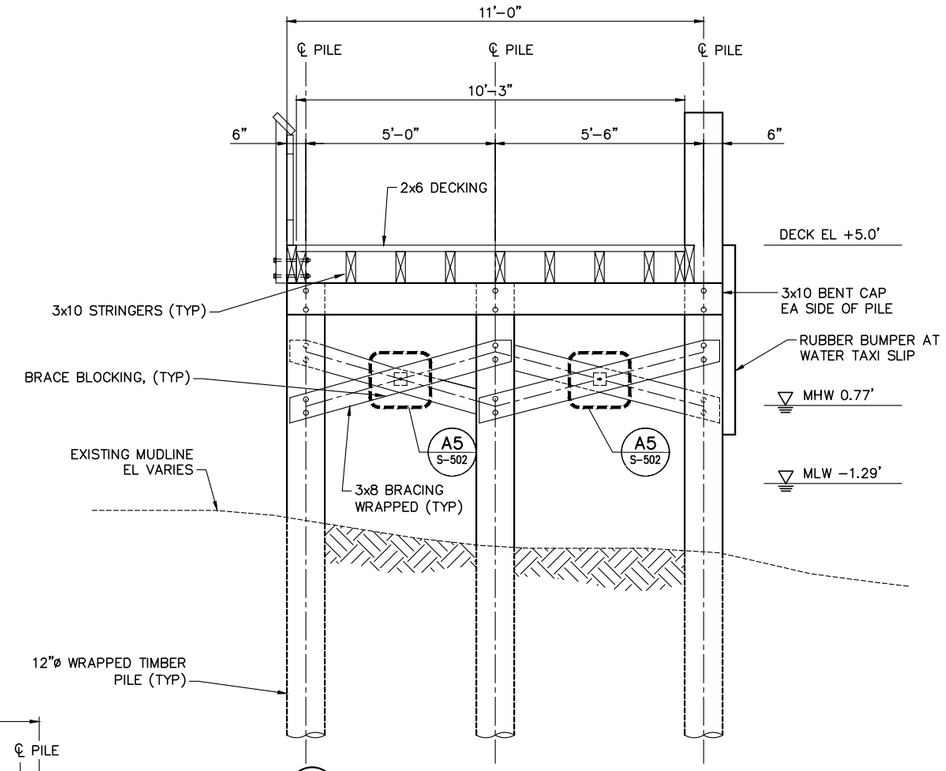

B3 / S-110 BOARDWALK SECTION AT WATER TAXI STOP
SCALE: 1/2"=1'-0"
S-113, S-114, S-115

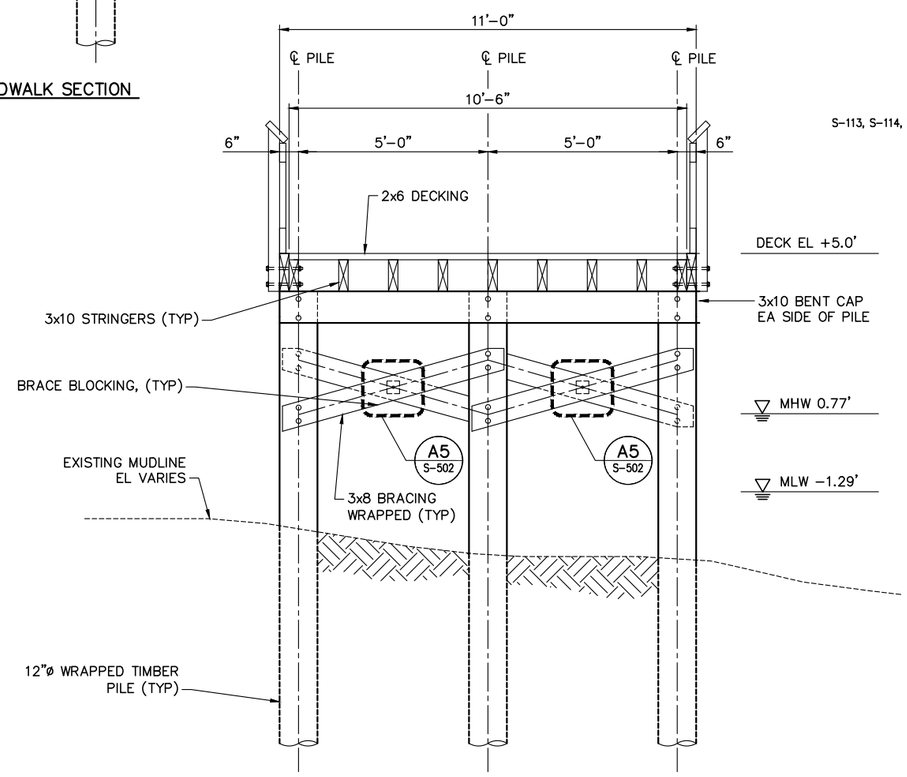

A2 / S-114 BOARDWALK SECTION AT OVERLOOK
SCALE: 1/2"=1'-0"
S-115

2' 0'-0" 2' 4'
SCALE: 1/2"=1'-0"

100% SUBMITTAL
SEPTEMBER 13, 2018
NOT TO BE USED FOR CONSTRUCTION

CITY OF TAMPA FLORIDA ORGANIZED JULY 15 1887

Mark	Description	Date	Appr.

LOWRY PARK DOCK AND BOARDWALK IMPROVEMENTS

BOARDWALK SECTIONS

moffatt & nichol
501 EAST KENNEDY BLVD
SUITE 1910
TAMPA, FLORIDA 33602

Designed by: IWC		Date: 2018-05-18	Rev. -
Dwn by: JAD	Ckd by: IWC	M&N Project No. 9678-01	
Reviewed by: DCM		Drawing code:	
Submitted by: MACPHERSON, DEBORAH MOFFATT & NICHOL		Drawing Scale: Plot scale: 1:1 (0 SHEET)	

SEAL

Sheet Reference No.
S-404
INDEX: 26 OF 33

File: G:\TA\9678-01\cadd_Active_lowrypark\967801-LP_S-404; Plotted: 10/31/2018 4:08 PM by SMITH, ANTHONY R.; Saved: 9/12/2019 4:12 PM by JJORDAN

DRAWING SCALES SHOWN BASED ON 22"x34" DRAWING

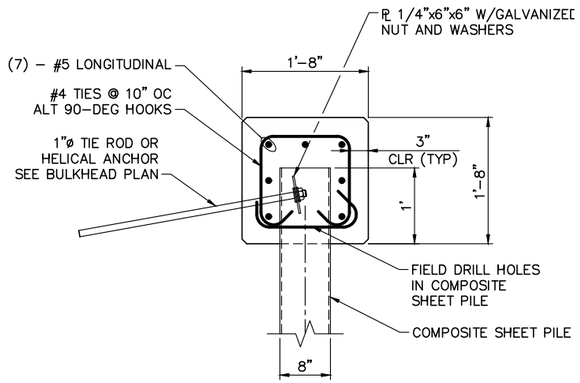

C1 S-120 HELICAL ANCHOR IN CAP
SCALE: 1" = 1'–0"

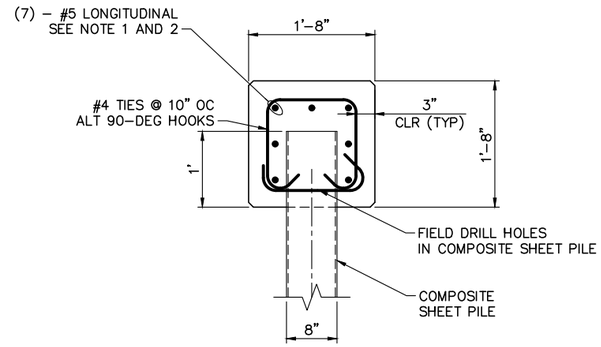

C3 S-501 BULKHEAD CAP
SCALE: 1" = 1'–0"

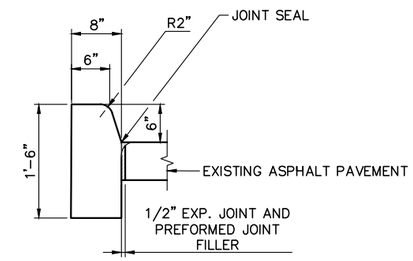

C4 S-501 FDOT TYPE D CONCRETE CURB
SCALE: 1" = 1'–0"

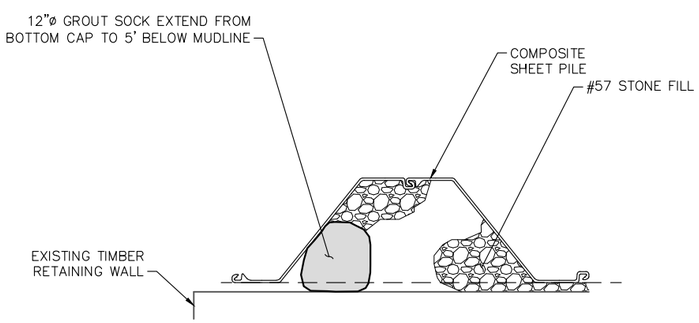

B1 S-120 DETAIL– END BULKHEAD
SCALE: 1" = 1'–0"

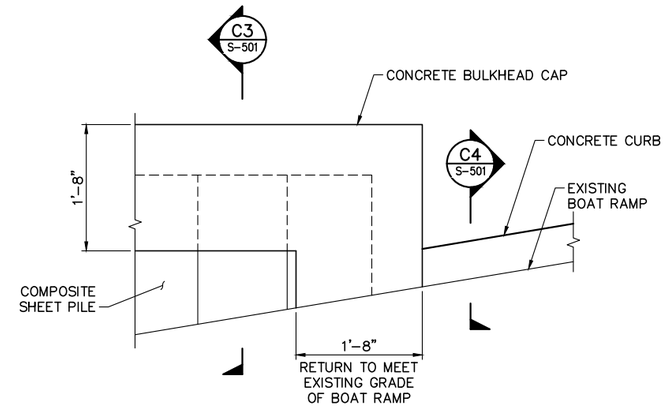

B3 S-120 ELEVATION – END OF BULKHEAD AT BOAT RAMP
SCALE: 1" = 1'–0"

NOTES:

1. TERMINATE LONGITUDINAL REINFORCEMENT IN STANDARD 90 DEGREE HOOKS AT ENDS OF CAP.
2. LONGITUDINAL BARS TO BE CONTINUOUS THROUGH CORNERS AND BENDS IN BULKHEAD

1' 0' 1' 2'
SCALE: 1"=1'

100% SUBMITTAL
SEPTEMBER 13, 2018
NOT TO BE USED FOR CONSTRUCTION

CITY OF TAMPA FLORIDA ORGANIZED JULY 15 1887

Mark	Description	Date	Appr.

LOWRY PARK DOCK AND BOARDWALK IMPROVEMENTS

BULKHEAD DETAILS

Date: 2018-05-18 | Rev. –
M&N Project No. 9678-01
Drawing code:
Drawing Scale: Plot scale: 1:1 (0 SHEET)

Designed by: IWC | Dwn by: JAD | Ckd by: IWC
Reviewed by: DCM
Submitted by: MACPHERSON, DEBORAH MOFFATT & NICHOL

moffatt & nichol
501 EAST KENNEDY BLVD
SUITE 1910
TAMPA, FLORIDA 33602

SEAL

Sheet Reference No.
S-501
INDEX: 27 OF 33

File: Q:\TA\9678-01\cadd_Active_lowrypark\967801-LP_S-501; Plotted: 10/31/2018 4:06 PM by SMITH, ANTHONY R.; Saved: 8/31/2018 8:42 AM by TALSTON

DRAWING SCALES SHOWN BASED ON 22"x34" DRAWING

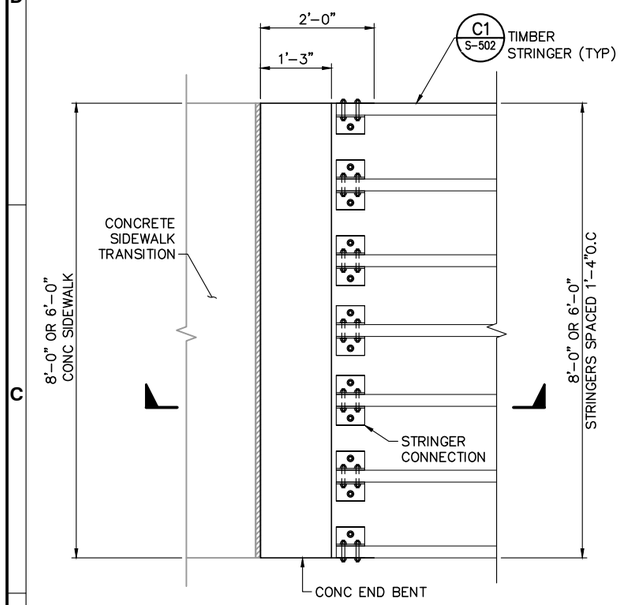

NOTE: DECKING NOT SHOWN FOR CLARITY

PLAN

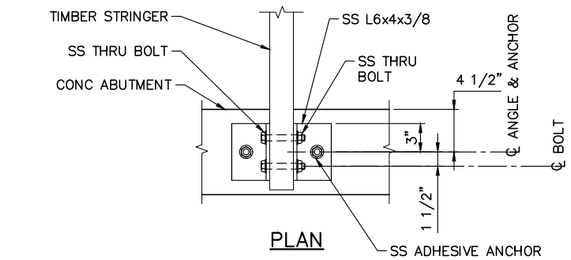

PLAN

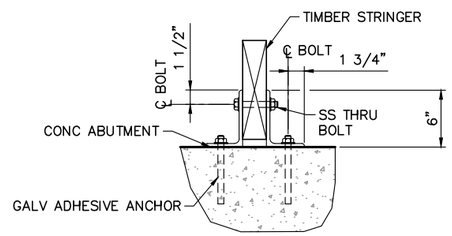

SECTION

C1 S-502 DETAIL STRINGER
SCALE: 1 1/2" = 1'-0"

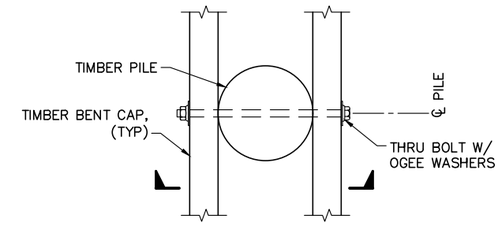

PLAN

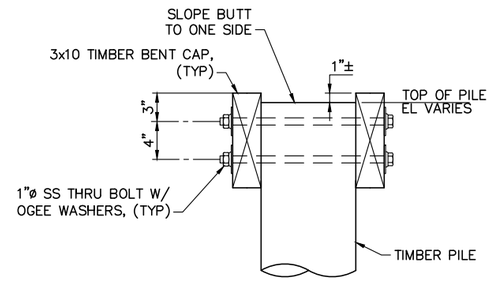

SECTION

C4 S-102 BENT CAP CONNECTION
SCALE: 1-1/2"=1'-0"

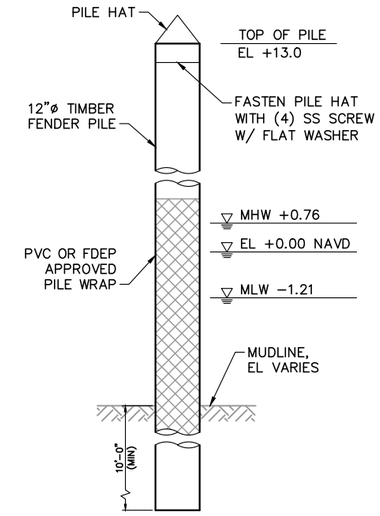

C5 S-502 DETAIL – TIMBER PILE
SCALE: 1/2"=1'-0"

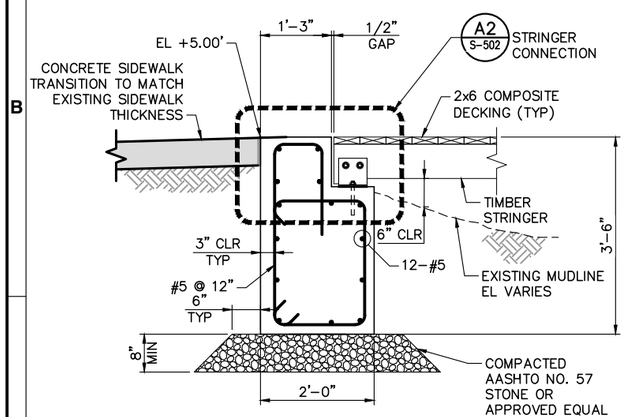

A1 S-100 CONCRETE END BENT
S-110
SCALE: 3/4"=1'-0"

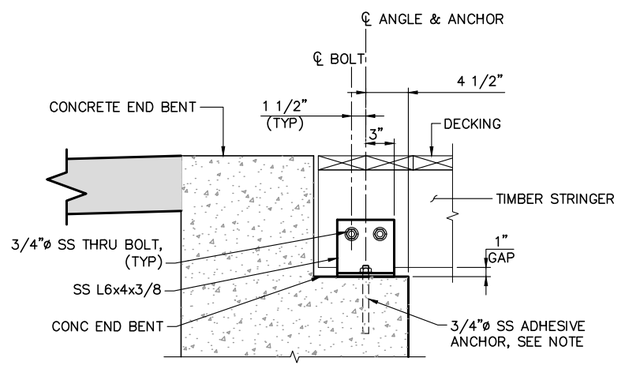

NOTE:
EMBEDMENT DEPTH PER EPOXY MANUFACTUR'S RECOMMENDATIONS, MINIMUM EMBEDMENT DEPTH 8".

A2 S-502 ELEVATION – STRINGER CONNECTION
SCALE: 1 1/2"=1'-0"

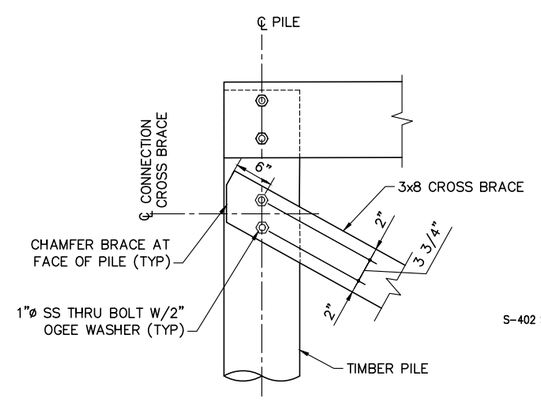

A3 S-401 CROSS BRACE CONNECTION
S-402 S-404
SCALE: 1"=1'-0"

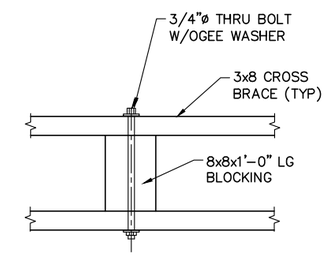

A5 S-401 CROSS BRACE BLOCKING
S-402 S-404
SCALE: NTS

1' 0'-0" 1' 2'
SCALE: 1"=1'-0"

2' 0'-0" 1' 2'
SCALE: 3/4"=1'-0"

1' 0'-0" 6" 1'
SCALE: 1 1/2"=1'-0"

100% SUBMITTAL
SEPTEMBER 13, 2018
NOT TO BE USED FOR CONSTRUCTION

CITY OF TAMPA FLORIDA ORGANIZED JULY 15, 1887

Mark	Description	Date	Appr.

LOWRY PARK DOCK AND BOARDWALK IMPROVEMENTS

TIMBER BOARDWALK & DOCK DETAILS

Designed by: IWC
Dwn by: JAD
Ckd by: IWC
Reviewed by: DCM
Submitted by: MACPHERSON, DEBORAH MOFFATT & NICHOL
Date: 2018-05-18
Rev. -
M&N Project No. 9678-01
Drawing code:
Drawing Scale:
Plot scale: 1:1 (0 SHEET)

501 EAST KENNEDY BLVD SUITE 1910 TAMPA, FLORIDA 33602
moffatt & nichol

SEAL

Sheet Reference No.
S-502
INDEX: 28 OF 33

File: Q:\TA\9678-01\cadd_Active_lowrpark\96780-1_LP_S-502; Plotted: 10/31/2018 4:06 PM by SMITH, ANTHONY R.; Saved: 8/30/2018 2:14 PM by MCOKER

DRAWING SCALES SHOWN BASED ON 22"x34" DRAWING

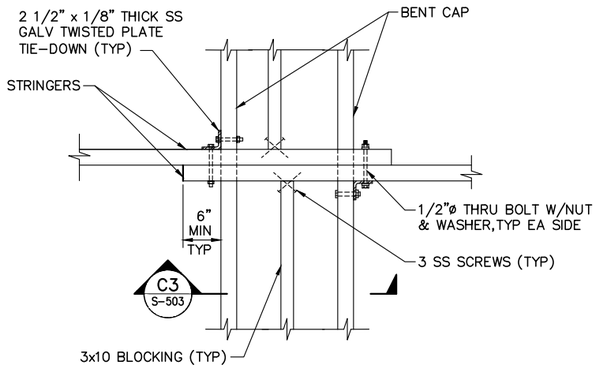

C2 S-503 DETAIL – FRAMING PLAN (INTERIOR SPLICES)
SCALE: 1"=1'-0"

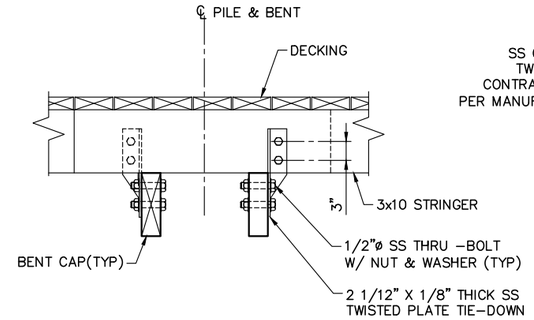

C3 S-503 SECTION – INTERIOR SPLICE
SCALE: 1"=1'-0"

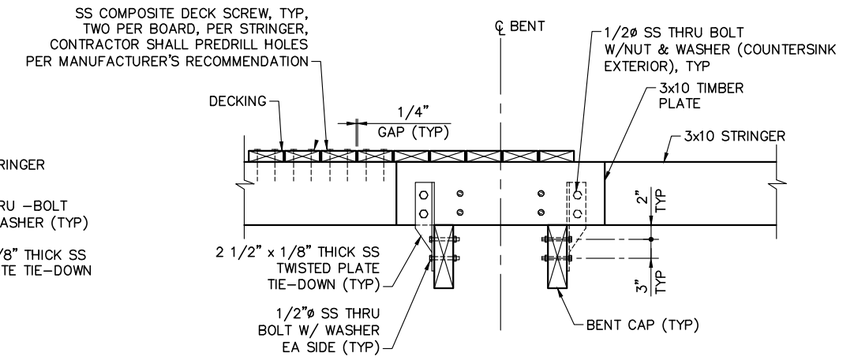

C4 S-503 SECTION – EDGE SPLICE
SCALE: 1"=1'-0"

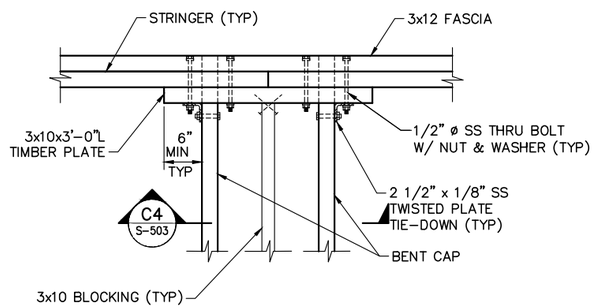

B1 S-503 DETAIL – FRAMING PLAN (BUTT SPLICE)
SCALE: 1"=1'-0"

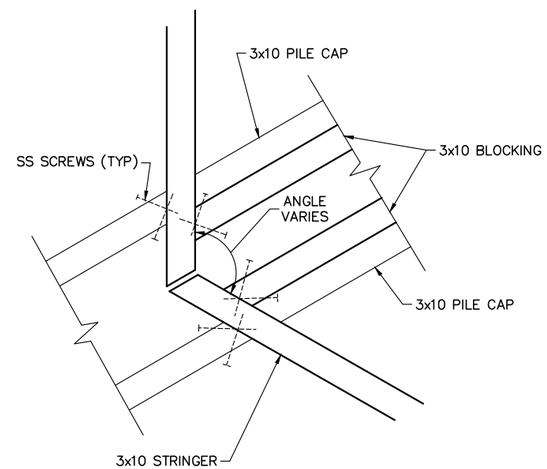

B3 S-503 ANGLED STRINGER BEARING DETAIL
SCALE: 1-1/2"=1'-0"

1' 0'-0" 1' 2'
SCALE: 1"=1'-0"

100% SUBMITTAL
SEPTEMBER 13, 2018
NOT TO BE USED FOR CONSTRUCTION

DRAWING SCALES SHOWN BASED ON 22"x34" DRAWING

Mark	Description	Date	Appr.

LOWRY PARK DOCK AND BOARDWALK IMPROVEMENTS

TIMBER DOCK DETAILS

moffatt & nichol
501 EAST KENNEDY BLVD
SUITE 1310
TAMPA, FLORIDA 33602

Designed by: IWC
Dwn by: JAD
Cad by: IWC
Reviewed by: DCM
Submitted by: MACPHERSON, DEBORAH MOFFATT & NICHOL
Date: 2018-05-18
Rev. -
M&N Project No. 9678-01
Drawing code:
Drawing Scale:
Plot scale: 1:1 (0 SHEET)

SEAL

Sheet Reference No.
S-503
INDEX: 29 OF 33

File: G:\TA\9678-01\cadd_Active_lowrypark\967801-LP_S-503; Plotted: 10/31/2018 4:06 PM by SMITH, ANTHONY R.; Saved: 9/10/2018 3:34 PM by JJORDAN

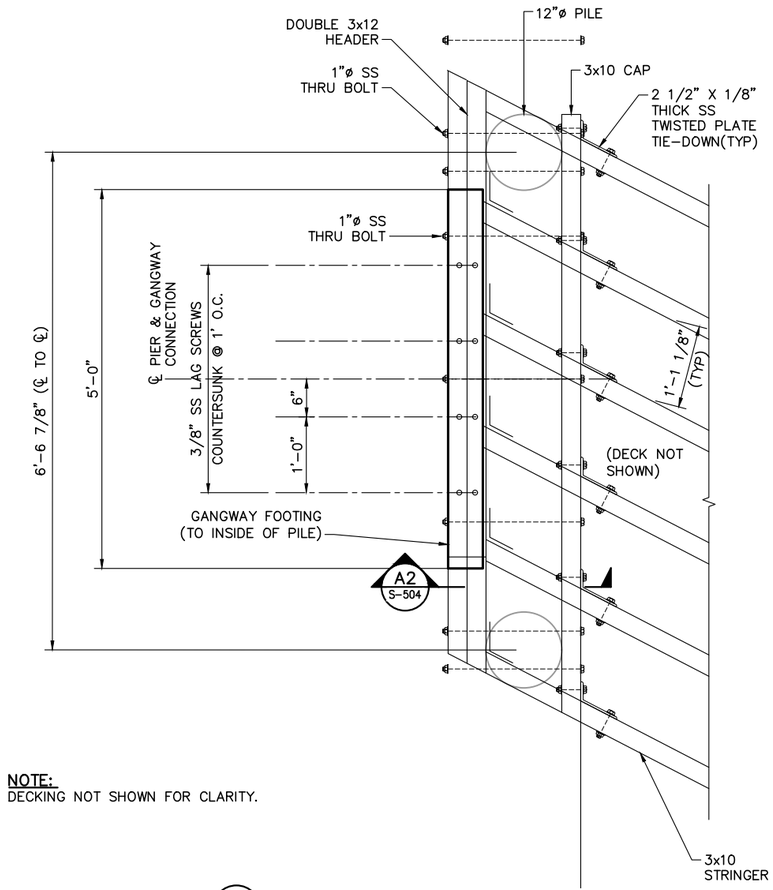

NOTE:
DECKING NOT SHOWN FOR CLARITY.

B2 S-504 GANGWAY CONNECTION AT SOUTH DOCK
SCALE: 1"=1'-0"

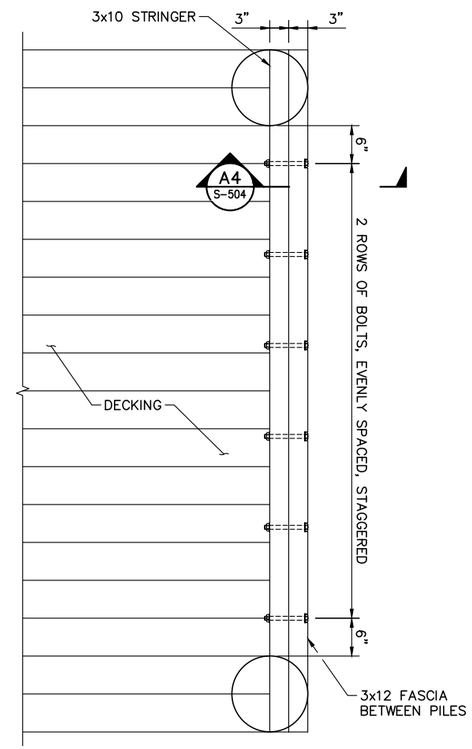

B4 S-504 FASCIA PLAN VIEW
SCALE: 1"=1'-0"

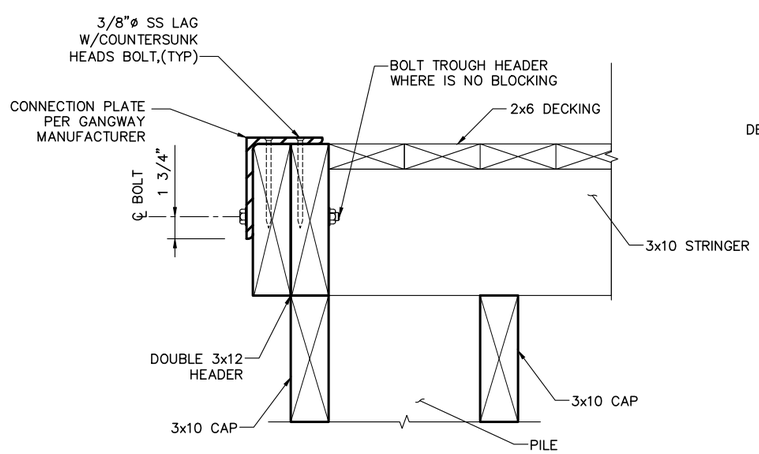

A2 S-102 CONNECTION AT GANGWAY
SCALE: 2"=1'-0"

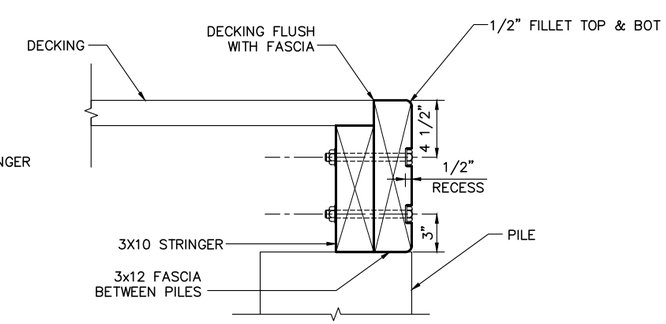

A4 S-504 SECTION
SCALE: 2"=1'-0"

1'-0" 0'-0" 1'-0" 2'-0"
SCALE: 1"=1'-0"

6" 0'-0" 6" 1'-0"
SCALE: 2"=1'-0"

100% SUBMITTAL
SEPTEMBER 13, 2018
NOT TO BE USED FOR CONSTRUCTION

Mark	Description	Date	Appr.

CITY OF TAMPA FLORIDA ORGANIZED JULY 15 1887

LOWRY PARK DOCK AND BOARDWALK IMPROVEMENTS

STRUCTURAL DETAILS

501 EAST KENNEDY BLVD
SUITE 1910
TAMPA, FLORIDA 33602
moffatt & nichol

Designed by: IWC		Date: 2018-05-18	Rev. -
Dwn by: JAD	Cad by: IWC	M&N Project No. 9678-01	
Reviewed by: DCM		Drawing code:	
Submitted by: MACPHERSON, DEBORAH MOFFATT & NICHOL		Drawing Scale: Plot scale: 1:1 (0 SHEET)	

SEAL

Sheet
Reference No.
S-504
INDEX: 30 OF 33

File: Q:\TA\9678-01\cadd_Active_lowrypark\967801-LP_S-504; Plotted: 10/31/2018 4:06 PM by SMITH, ANTHONY R.; Saved: 9/10/2018 3:50 PM by JJORDAN

DRAWING SCALES SHOWN BASED ON 22"x34" DRAWING

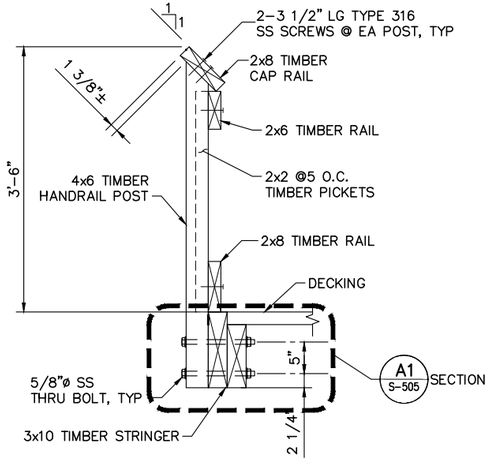

NOTE: ROUTE ALL EDGES OF TIMBER HANDRAILS.

C1 / S-102 TIMBER HANDRAIL
SCALE: 1" = 1'-0"

S-103,S-104, S-112, S-113, S-114, S-115

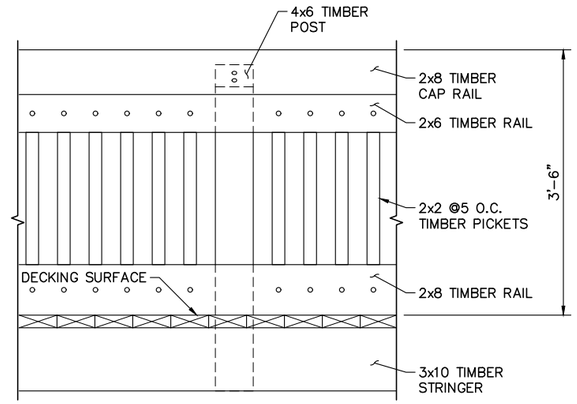

C2 / S-505 TIMBER HANDRAIL – ELEVATION
SCALE: 1" = 1'-0"

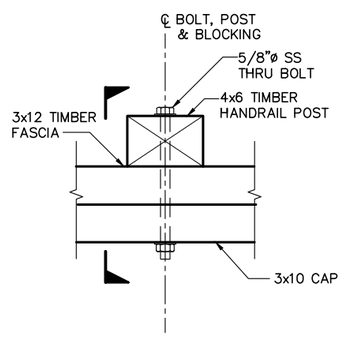

PLAN

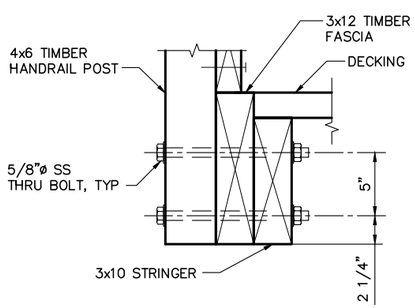

SECTION

A1 / S-505 HANDRAIL CONECTION (TYP)
SCALE: Custom

6' 0'-0" 6" 1'-0"
SCALE: 2"=1'-0"

1' 0'-0" 1' 2'
SCALE: 1"=1'-0"

100% SUBMITTAL
SEPTEMBER 13, 2018
NOT TO BE USED FOR CONSTRUCTION

CITY OF TAMPA FLORIDA ORGANIZED JULY 15 1887

Mark	Description	Date	Appr.

LOWRY PARK DOCK AND BOARDWALK IMPROVEMENTS

TIMBER HANDRAIL

Designed by: IWC
Dwn by: JAD
Ckd by: IWC
Reviewed by: DCM
Date: 2018-05-18
Rev. -
M&N Project No. 9678-01
Drawing code:
Submitted by: MACPHERSON, DEBORAH MOFFATT & NICHOL
Drawing Scale:
Plot scale: 1:1 (D SHEET)

501 EAST KENNEDY BLVD
SUITE 1910
TAMPA, FLORIDA 33602
moffatt & nichol

SEAL

Sheet Reference No.
S-505
INDEX: 31 OF 33

File: Q:\TA\9678-01\cadd_Active_lowrpark\967801-LP_S-505; Plotted: 10/31/2018 4:06 PM by SMITH, ANTHONY R.; Saved: 8/29/2018 10:28 AM by TALSTON

DRAWING SCALES SHOWN BASED ON 22"x34" DRAWING

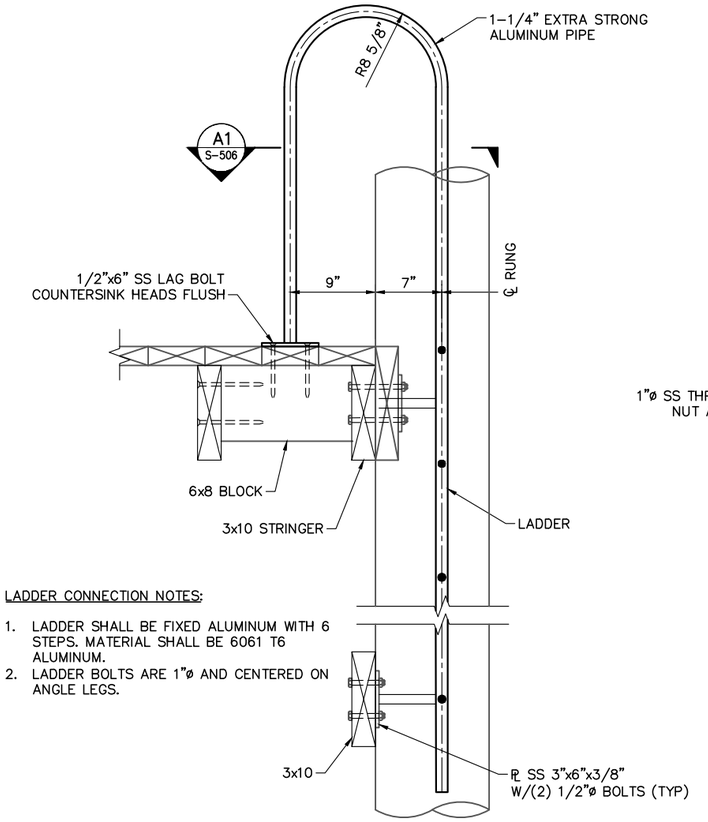

LADDER CONNECTION NOTES:

1. LADDER SHALL BE FIXED ALUMINUM WITH 6 STEPS. MATERIAL SHALL BE 6061 T6 ALUMINUM.
2. LADDER BOLTS ARE 1"ø AND CENTERED ON ANGLE LEGS.

B1 S-506 DETAIL – LADDER CONNECTION
SCALE: 1 1/2"=1'-0"

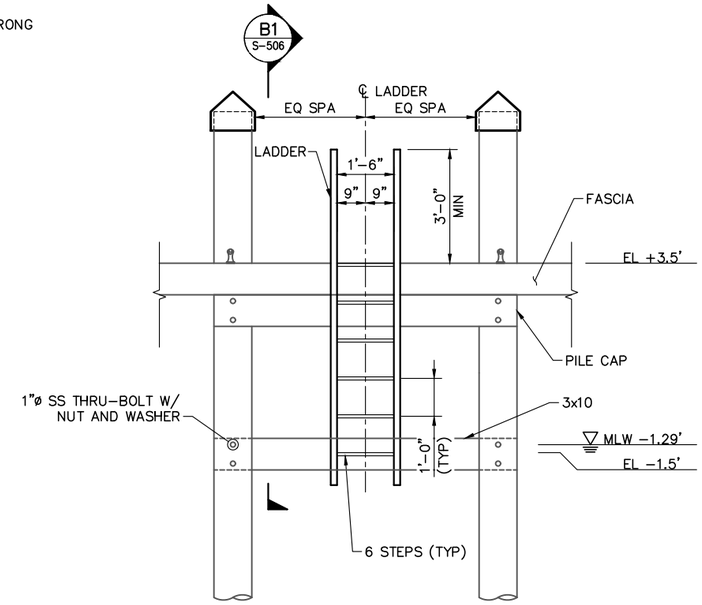

C2 S-506 ELEVATION – LADDER
SCALE: 1/2"=1'-0"

NOTES:

1. CLEATS SHALL BE CAST ALUMINUM-MAGNESIUM, GALVANIZED MALLEABLE IRON, OR GALVANIZED CAST OPEN BASE CLEATS TYPE 540H AS SUPPLIED BY HENDERSON MARINE SUPPLY, SEAPORT MARINE, OR APPROVED EQUAL.

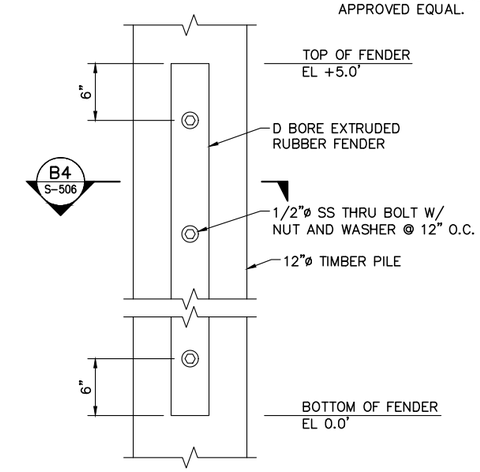

C4 S-506 FENDER ELEVATION
SCALE: 1 1/2"=1'-0"

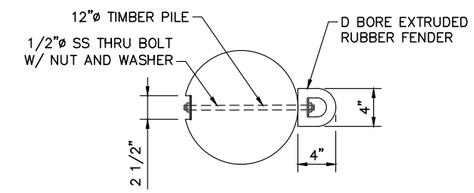

B4 S-506 FENDER SECTION
SCALE: 1 1/2"=1'-0"

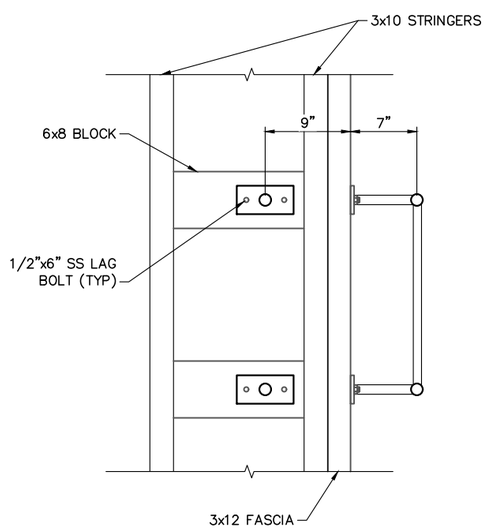

A1 S-506 LADDER PLAN
SCALE: 1 1/2"=1'-0"

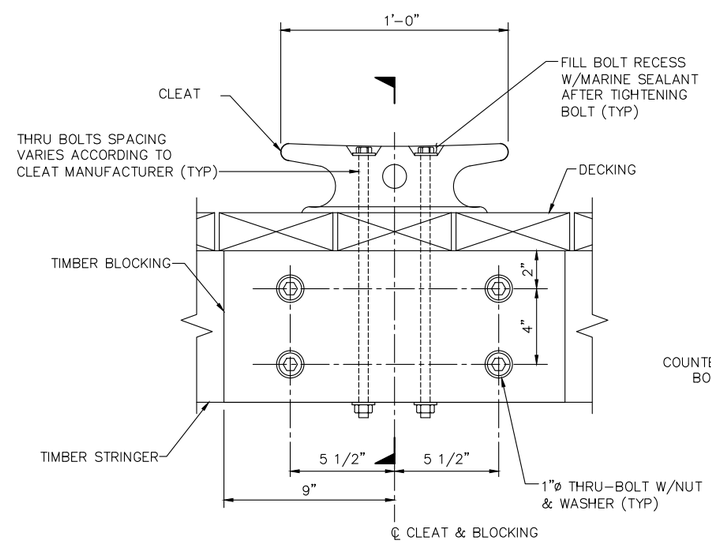

ELEVATION

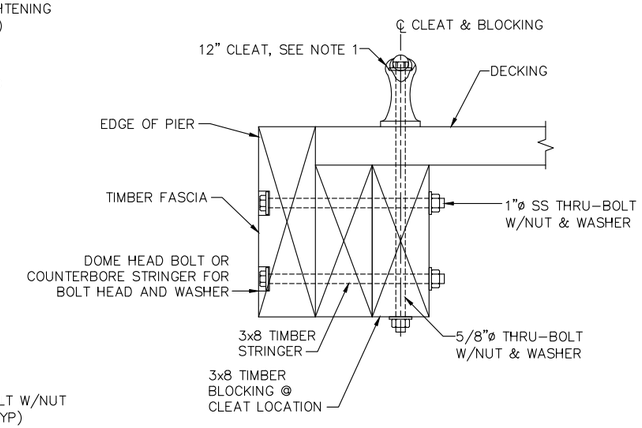

SECTION

A3 S-506 DETAIL – 14 INCH CLEAT
SCALE: 3"=1'-0"

2'-0" 0'-0" 2'-0" 4'-0"
SCALE: 1/2"=1'-0"

1' 0'-0" 6" 1'
SCALE: 1 1/2"=1'-0"

6" 0'-0" 3" 6"
SCALE: 3"=1'-0"

100% SUBMITTAL
SEPTEMBER 13, 2018
NOT TO BE USED FOR CONSTRUCTION

DRAWING SCALES SHOWN BASED ON 22"x34" DRAWING

CITY OF TAMPA FLORIDA ORGANIZED JULY 15 1887

Mark	Description	Date	Appr.

LOWRY PARK DOCK AND BOARDWALK IMPROVEMENTS

MISCELLANEOUS DETAILS

Date: 2018-05-18 | Rev. –
M&N Project No. 9678-01
Drawing code:
Drawing Scale:
Plot scale: 1:1 (D SHEET)

Designed by: IWC
Dwn by: JAD
Ckd by: IWC
Reviewed by: DCM
Submitted by: MACPHERSON, DEBORAH MOFFATT & NICHOL

moffatt & nichol
501 EAST KENNEDY BLVD SUITE 1910 TAMPA, FLORIDA 33602

SEAL

Sheet Reference No.
S-506
INDEX: 32 OF 33

File: Q:\TA\9678-01\cadd_Active_lowrypark\967801-LP_S-506; Plotted: 10/31/2018 4:06 PM by SMITH, ANTHONY R.; Saved: 8/30/2018 2:15 PM by MCOKER

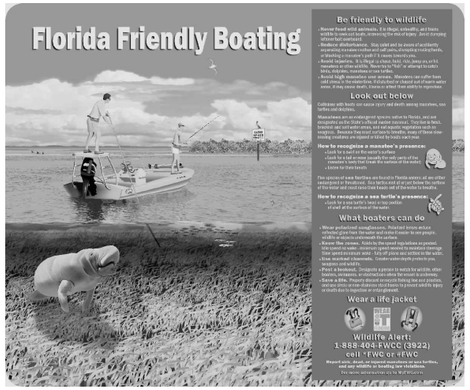

C1 / S-520 MANATEE EDUCATON SIGN
SCALE: NTS

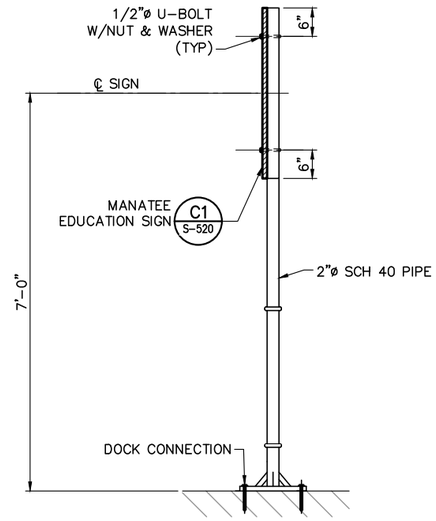

C3 / S-100 DOCK MOUNTING DETAIL
SCALE: 3/4"=1'-0"

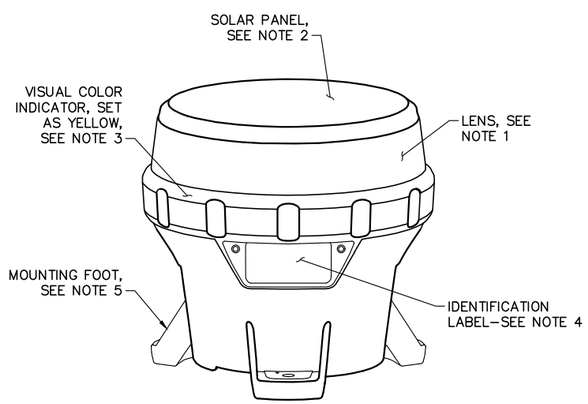

A1 / ##### DETAIL – SOLAR WARNING LIGHT
SCALE: NTS

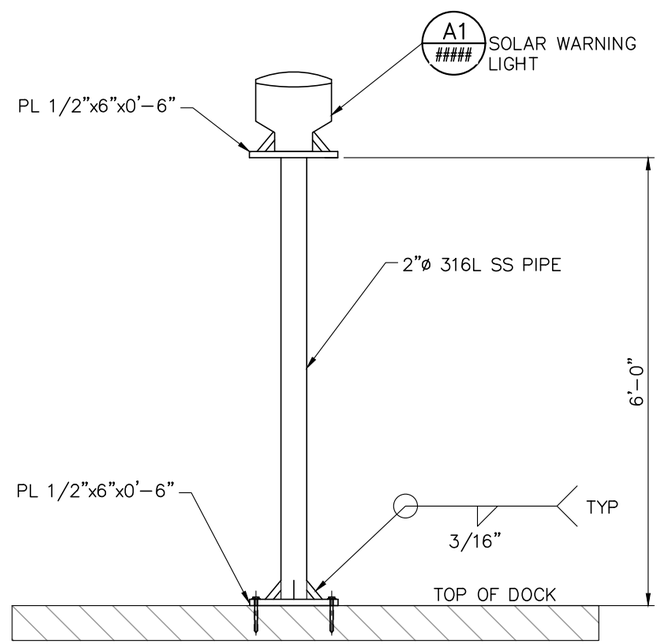

A3 / S-100 WARNING LIGHT
SCALE: 3/4"=1'-0"

SOLAR WARNING LIGHT NOTES

1. UV RESISTANT, POLYCARBONATE/POLYSOLAXANE CO-POLYMER BODY AND LENS MATERIAL. DOUBLE O-RING SEALING WITH WATERPROOF VENT. REPLACEABLE BATTERY PACK WITH STATUS FEEDBACK.
2. SOLAR PANEL WITH BYPASS BLOCKING DIODE FUNCTION AND MAXIMUM POWER POINT (MPPT).
3. LED LIGHT SOURCE WITH TEMPERTURE-CORRECTED LED DRIVERS. SELECTABLE FLASH PATTERNS. SELECTABLE INTENSITY FROM 25 TO 925 LUX. SELECTABLE COLOR TO BE YELLOW
4. LUMINAIRE SHALL BE MANUFACTURER CARMANAH MODEL: #M550 OR APPROVED EQUAL. -45 TO 124 FAHRENHEIT AMBIENT OPERATING TEMPERATURE. USCG PATON 33CFR66 & CFR67 CLASS C COMPLAINT.
5. SOLAR POWER NAVIGATIONAL SHALL BE INSTALLED AS SHOWN ON DRAWINGS. SECURE NAVIGATIONAL LIGHT WITH 316 STAINLESS STEEL HARDWARE. LOCATE LIGHT IN OPTIMUM LOCATION VISIBLE TO APPROACHING VESSELS, PROTECTED FROM ARTIFICIAL LIGHT SOURCES AND PROTECTION FROM POSSIBLE DAMAGE.

2' 0'-0" 1' 2'
SCALE: 3/4"=1'-0"

100% SUBMITTAL
SEPTEMBER 13, 2018
NOT TO BE USED FOR CONSTRUCTION

DRAWING SCALES SHOWN BASED ON 22"x34" DRAWING

CITY OF TAMPA FLORIDA ORGANIZED JULY 15 1887

Mark	Description	Date	Appr.

LOWRY PARK DOCK AND BOARDWALK IMPROVEMENTS

AIDS TO NAVIGATION AND SIGN DETAILS

moffatt & nichol
501 EAST KENNEDY BLVD
SUITE 1910
TAMPA, FLORIDA 33602

Designed by: IWC
Dwn by: JAD
Cad by: IWC
Reviewed by: DCM
Submitted by: MACPHERSON, DEBORAH MOFFATT & NICHOL
Date: 2018-05-18
M&N Project No. 9678-01
Drawing code:
Drawing Scale: Plot scale: 1:1 (0 SHEET)
Rev. -

SEAL

Sheet Reference No.
S-520
INDEX: 33 OF 33

File: Q:\TA\9678-01\cadd_Active_lowrypark\967801-LP_S-520; Plotted: 10/31/2018 4:07 PM by SMITH, ANTHONY R.; Saved: 9/12/2019 4:12 PM by JJORDAN