CITY OF
TAMPA, FLORIDA

NOTICE TO BIDDERS, INSTRUCTIONS TO BIDDERS
PROPOSAL, BID BOND, FORM OF NOTICE OF AWARD,
AGREEMENT, PERFORMANCE BOND AND
SPECIFICATIONS

FOR

Contract 19-C-00049

FY19 City-Wide Stormwater Box Culvert Rehabilitation

City of Tampa
CONTRACT ADMINISTRATION DEPARTMENT
TAMPA MUNICIPAL OFFICE BUILDING
306 E. JACKSON STREET - 4TH FLOOR NORTH
TAMPA, FLORIDA 33602

AUGUST 2019

CITY OF TAMPA
CONTRACT ADMINISTRATION DEPARTMENT
306 E. Jackson Street 280A4N
Tampa, FL 33602

****

BID NOTICE MEMO
****

Bids will be received no later than 1:30 p.m. on the indicated Date(s) for the following Project(s):
****

CONTRACT NO.: 19-C-00049; FY19 City-Wide Stormwater Box Culvert Rehabilitation
BID OPENING: 1:30PM, Tuesday, September 10, 2019 ESTIMATE: $1,000,000 SCOPE: The project provides furnishing labor, materials, and equipment to inspect, clean, and rehabilitate stormwater pipes and box culverts including maintenance of traffic, installation of structures, sodding, surface restoration. and all associated work required for a complete project, as shown and indicated on the Drawings and in the Specifications in accordance with the Contract Documents. PRE-BID CONFERENCE: 2:00PM, Tuesday, August 20, 2019. Attendance is not mandatory, but recommended.
****

Bids will be opened in the 4th Floor Conference Room, Tampa Municipal Office Building, 306 E. Jackson Street, Tampa, Florida 33602. Pre-Bid Conference is held at the same location unless otherwise indicated. Plans and Specifications and Addenda for this work may be examined at, and downloaded from, www.demandstar.com. Backup files are available at http://www.tampagov.net/contract-administration/programs/construction-project-bidding. Email Questions to: contractadministration@tampagov.net .

TABLE OF CONTENTS

BIDDING REQUIREMENTS

Notice to Bidders N-1
Instructions to Bidders ..... I-1a thru I-4
Insurance Requirements ..... INS-1 thru INS-2
MBD Form 70 ..... MBD 1
U-WMBE/SLBE Availability Contact List ACL-1
Availability Contact List Instructions ACLI-1

BID FORMS

Proposal ..... P-1 thru P-3
Good Faith Efforts Compliance Plan ..... GFECP
W/MBE Solicited ..... DMI - Solicited
W/MBE Utilized ..... DMI - Utilized
Bid Bond BB-1

CONTRACT FORMS

Agreement ..... A-1 thru A-15
Public Construction Bond ..... PB-1 thru PB-3

GENERAL PROVISIONS

General Provisions ..... G-1 thru G-10
Specific Provisions ..... SP-1- thru SP-18
Contract Items ..... CI-1- thru CI-8
Subcontractors Payment Form ..... DMI - Payments
Project Sign ..... Sign-1 thru Sign-2

TECHNICAL SPECIFICATIONS

WORKMANSHIP AND MATERIALS

W-1 - EXCAVATION - EARTH & ROCK ..... W1-1 thru W1-5
W-6 - REINFORCING STEEL ..... W6 -1 thru W6 -4
W-8 - METAL CASTINGS ..... W8 -1
W-10 - DUCTILE IRON PIPE AND FITTINGS ..... W10 -1 thru W10 -3
W-11 - PVC PIPE- GRAVITY ..... W11 -1 thru W11 -7
W-15 - LAYING & JOINTING PIPE FOR FM & SEWERS ..... W15 -1 thru W15 -6
W-16 – SW - RESTORATION OF STREET PAVEMENTS ..... W16 -1 thru W16 -16
W-17 - LAWN REPLACEMENT ..... W17 -1 thru W17 -2
W-70 - SEWER LINE CLEANING ..... W70 -1 thru W70 -3
W-112 - TREES, PLANTS AND GROUNDCOVERS ..... W112 -1 thru W112 -7
W-113 - DISPOSAL OF DEBRIS ..... W113 -1
W-425 - SW INLETS, MANHOLES & JUNCTION BOXES ..... W425 -1 thru W425 -6
W-430 - PIPE CULVERTS & STORM SEWER COT ..... W430 -1 thru W430 -5
W-960 - STRUCTURAL REPAIR SPECIFICATIONS AND DETAILS ..... W960 -1 thru W960 -21
STRUCTURAL SPEC DETAILS ..... 1 thru 10
EXAMPLES OF STRUCTURAL PROBLEMS ..... 1 thru 12
FY19 STORMWATER BOX REHAB LIST ..... 1 thru 3

NOTICE TO BIDDERS
CITY OF TAMPA, FLORIDA
Contract 19-C-00049; FY19 City-Wide Stormwater Box Culvert Rehabilitation

Sealed Proposals will be received by the City of Tampa no later than 1:30 P.M., September 10, 2019 , in the 4th Floor Conference Room, Tampa Municipal Office Building, 306 E. Jackson Street, Tampa, Florida, there to be publicly opened and read aloud.

The proposed work is to include, but not be limited to, furnishing labor, materials, and equipment to inspect, clean, and rehabilitate stormwater pipes and box culverts including maintenance of traffic, installation of structures, sodding, surface restoration. with all associated work required for a complete project in accordance with the Contract Documents.

The Instructions to Bidders, Proposal, Form of Bid Bond, Agreement, Form of Public Construction Bond, Specifications, Plans and other Contract Documents are posted at DemandStar.com. Backup files may be downloaded from http://www.tampagov.net/contract-administration/programs/construction-project-bidding. One set may be available for reference at the office of the Contract Administration Department, Municipal Office Building, Fourth Floor North, City Hall Plaza, Tampa, Florida 33602.

Each Proposal must be submitted on the Proposal form included in the Specifications and must be accompanied by a certified check or cashier's check on a solvent bank or trust company in compliance with Section 255.051, Florida Statutes, made payable to the City of Tampa, in an amount of not less than five per cent of the total bid, or a Bid Bond, of like amount, on the form set forth in the Contract Documents, as a guarantee that, if the Proposal is accepted, the Bidder will execute the Proposed Contract and furnish a Public Construction Bond within twenty (20) days after receipt of Notice of Award of Contract.

To be eligible to submit a proposal, a Bidder must hold the required and/or appropriate current license, certificate, or registration (e.g. DBPR license/certificate of authorization, etc.) in good standing at the time of receipt of Bids. Per Section 489.131, Florida Statutes, Proposals submitted for the construction, improvement, remodeling, or repair of public projects must be accompanied by evidence that the Bidder holds the required and/or appropriate current certificate or registration, unless the work to be performed is exempt under Section 489.103, Florida Statutes.

The City of Tampa reserves the right to reject any or all Bids and to waive any informalities in the Bid and/or Bid Bond. Acceptance or rejection of Proposals will be made as soon as practicable after the Proposals are received, but the City reserves the right to hold Proposals for ninety (90) days from the date of Opening.

Bid Protest Procedures: Unless subsequently indicated otherwise, in a revised posting on the Department's web page for Construction Project Bidding, the City of Tampa intends to award the referenced project to the lowest bidder listed in the tabulation posted on or about the date of Bid Opening. A bidder aggrieved by this decision may file a protest not later than 4:30 P.M., five (5) business days from the first posting thereof, pursuant to City of Tampa Code Chapter 2, Article V, Division 3, Section 2-282, Procurement Protest Procedures. Protests not conforming therewith shall not be reviewed.

> Pursuant to Section 2-282, City of Tampa Code, during the solicitation period, including any protest and/or appeal, NO CONTACT with City officers or employees is permitted from any bidder or proposer, other than as specifically stated in this solicitation and as follows:
> Director of the Contract Administration Department (CAD)
> Contracts Management Supervisor, Jim Greiner
> Contract Officer, Jody Gray
> City legal department

Any Requests For Information must be submitted by email to ContractAdministration@tampagov.net

A person or affiliate who has been placed on the convicted vendor list following a conviction for a public entity crime may not submit a bid on a contract to provide any goods or services to a public entity, may not submit a bid on a contract with a public entity for the construction or repair of a public building or public work, may not submit bids on leases of real property to a public entity, may not be awarded or perform work as a contractor, supplier, subcontractor, or consultant under a contract with any public entity, and may not transact business with any public entity in excess of the threshold amount provided in Section 287.017, for CATEGORY TWO for a period of 36 months from the date of being placed on the convicted vendor list." Refer to Section 287.133, Florida Statues.

Pursuant to Section 287.087, Florida Statutes, under certain circumstances preference may be given to businesses with a drug-free workplace program that meets the requirements of said Section.

INSTRUCTIONS TO BIDDERS
SECTION 1 - SPECIAL INSTRUCTIONS

I-1.01 GENERAL:

The proposed work is the FY19 City-Wide Stormwater Box Culvert Rehabilitation in the City of Tampa, as required for a complete project, as shown on the plans and detailed in the specifications. The work is located on land owned or controlled by the City of Tampa.

To be eligible to submit a proposal, a Bidder must hold the required and/or appropriate current license, certificate, or registration (e.g. DBPR license/certificate of authorization, etc.) in good standing at the time of receipt of Bids. Per Section 489.131, Florida Statutes, Proposals submitted for the construction, improvement, remodeling, or repair of public projects must be accompanied by evidence that the Bidder holds the required and/or appropriate current certificate or registration, unless the work to be performed is exempt under Section 489.103, Florida Statutes.

I-1.02 FORM PREPARATION AND PRESENTATION OF PROPOSALS: Replace the second sentence with the following: Submission of the entire specification book is not required.

I-1.03 ADDENDA – Section I-2.03 is replaced with the following: No interpretation of the meaning of the Plans, Specifications, or other Contract Documents will be made to any Bidder orally.

Every request for such interpretation must be in writing, addressed to the City of Tampa, Contract Administration Department, 306 E. Jackson St., 4th Floor, Tampa, Florida 33602 and then emailed to ContractAdministration@tampagov.net. To be given consideration, such request must be received at least seven (7) days prior to the date fixed for the opening of the Proposals. Any and all such interpretations and any supplemental instructions will be in the form of written addenda which, if issued, will be posted on DemandStar.Com and on the Department's web page. Failure of any Bidder to receive any such addenda shall not relieve said Bidder from any obligation under his Proposal as submitted. All addenda so issued shall become part of the Contract Documents.

I-1.04 INSTRUCTIONS TO BIDDERS

SECTION 2 – GENERAL INSTRUCTIONS. Section I-2.07 SIGNATURE AND QUALIFICATIONS OF BIDDERS is replaced with the following:

> Proposals must be signed in ink by the Bidder with signature in full. When firm is a Bidder, the Proposal shall be signed in the name of the firm by one or more partners. When a corporation is a bidder the officer signing shall set out the corporate name in full beneath which he shall sign his name and give the title of his office.
>
> If the bidder referred to in Section I-2.07 is a corporation, it must submit; upon request, a copy of its filed Articles of Incorporation. In addition, if the bidder was incorporated in another state, it must establish that it is authorized to do business in the State of Florida. If the bidder is using a fictitious name, it must submit upon request, proof of registration of such name with the Clerk of the Circuit Court of the County where its principal place of business is. Failure to submit what is required is grounds to reject the bid of that bidder.

SECTION 2 – GENERAL INSTRUCTIONS. Section I-2.14 NONDISCRIMINATION IN EMPLOYMENT is changed to add the following to the end of the existing text:

The following provisions are hereby incorporated into any contract executed by or on behalf of the City. Contractor shall comply with the following Statement of Assurance: During the performance of the Contract, the Contractor assures the City, that the Contractor is in compliance with Title VII of the 1964 Civil Rights Act, as amended, the Florida Civil Rights Act of 1992, and the City of Tampa Code of Ordinances, Chapter 12, in that Firm/Contractor does not on the grounds of race, color, national origin, religion, sex, sexual orientation, gender identity or expression, age, disability, familial status, or marital status, discriminate in any form or manner against said Firm's/Contractor's employees or applicants for employment. Contractor understands and agrees that the Contract is conditioned upon the veracity of this Statement of Assurance, and that violation of this condition shall be considered a material breach of the Award/Contract. Furthermore, Contractor herein assures the City that said Contractor will comply with Title VI of the Civil Rights Act of 1964 when federal grant(s) is/are

involved. This Statement of Assurance shall be interpreted to include Vietnam-Era Veterans and Disabled Veterans within its protective range of applicability. Firm/Contractor further acknowledges and agrees to provide the City with all information and documentation that may be requested by the City from time to time regarding the solicitation, selection, treatment and payment of subcontractors, suppliers and vendors in connection with this Award/Contract. Firm/Contractor further acknowledges that it must comply with City of Tampa Code of Ordinances, Chapter 26.5, as enacted by Ordinance No. 2008-89.

I-1.05 TIME FOR COMPLETION:

The work shall be arranged to be completed in accordance with a progress schedule approved by the Construction Engineer.

The time for completion of this project, referred in Article 4.01 of the Agreement, shall be 365 consecutive calendar days. The period for performance shall start from the date indicated in the Notice To Proceed.

I-1.06 LIQUIDATED DAMAGES:

The amount of liquidated damages, referred to in Article 4.06 of the Agreement, for completion of this project shall be $500 per calendar day.

I-1.07 BASIS OF AWARD OF CONTRACT:

The basis of award referred to in Item I-2.11 of Instructions to Bidders shall be the greatest amount of work, which can be accomplished within the funds available as budgeted. The award may be made on the basis of the total bid, base bid, alternates(s) if any, unit bids if any, or any combination thereof deemed to be in the best interest of the City.

Unless all bids are rejected, the award will be made within 90 days after opening proposals.

I-1.08 GROUND BREAKING CEREMONY:

Arrangement may be made by the City in coordination with the Contractor, for construction to commence with a Ground Breaking Ceremony. Details will be discussed at the pre-construction conference.

I-1.09 INSURANCE:

The insurance required for this project shall be as indicated on the attached and incorporated Special Instructions pages beginning with page INS-1 entitled CITY OF TAMPA INSURANCE REQUIREMENTS, which among other things requires the Contractor to provide a Certificate of Insurance to the City prior to commencing work. The City may from time to time use a third party vendor to manage its insurance certificates and related documentation which vendor may periodically initiate contact, requests for information, etc. on the City's behalf.

I-1.10 EQUAL BUSINESS OPPORTUNITY PROGRAM (EBO) REQUIREMENTS / PROJECT SUBCONTRACTING GOAL(S)

BIDDERS MUST SUBMIT COMPLETED AND SIGNED CITY OF TAMPA FORMS MBD-10 AND MBD-20 WITH THEIR BIDS. BIDS SUBMITTED WITHOUT THESE COMPLETED FORMS (INCLUDING SIGNATURES) WILL BE DEEMED NON-RESPONSIVE. INSTRUCTIONS ON COMPLETING THE FORMS ARE INCLUDED AFTER EACH FORM IN THIS BID PACKAGE.

THE CHECKED BOX INDICATES SECTION THAT APPLIES TO THIS BID.

X

SUBCONTRACTING GOAL – (WMBE and SLBE)

In accordance with the City of Tampa's EBO Program, Chapter 26.5, City of Tampa Code, the subcontracting goal(s) has/have been established for subcontracting with City-certified underutilized WMBEs (Women and Minority Business Enterprises) and/or SLBEs (Small Local Business Enterprises) on this project (hereinafter "Goal"). *The Goal is based, in part, upon the availability of City-certified firms to perform the anticipated scope of work* ***(Bid is subject to the subcontracting project goal(s) section for which a corresponding numerical percent is indicated).*** Project Industry Category: Construction

Project Goal(s): _____% U-WMBE (Underutilized Woman and Minority Business Enterprise) (EBO Program)
per MBD Form-70 the U-WMBE subcontract Classification for Construction is African American (BBE)
_____% SLBE (Small Local Business Enterprise) (EBO Program) *only City-certified SLBEs*
__4.2% U-WMBE/SLBE Combined (EBO Program)
per MBD Form-70 the U-WMBE subcontract Classification for Construction is African American (BBE) together with City-certified SLBEs
_____% WMBE/SLBE ASPIRATIONAL (EBO Program) An all-inclusive SLBE/WMBE goal; any City certified firm counts towards goal attainment.

BIDDERS MUST SOLICIT ALL COMPANIES ON THE ATTACHED AVAILABILITY CONTACT LIST at least five (5) City business days or more prior to bid opening as a first step to demonstrate Good Faith Efforts to achieve the Goal. Substantive documentation that demonstrates Good Faith Efforts to achieve the Goal must be submitted with the bid, including emails, faxes, phone calls, letters, and other communication with City-certified firms. Bidders may explore other potential opportunities for subcontracting by consulting the current directory of all certified firms posted by the City of Tampa at https://tampa.diversitysoftware.com as the Availability Contact List may not be inclusive of all firms that could count toward Goal attainment. However, ONLY SUBCONTRACTING with those specific WMBEs designated as "underutilized" by Classification in the appropriate industry category (and, if made applicable by being specifically included in the above Goal, SLBEs) will count toward meeting the Goal. Making Good Faith Efforts through these and other means (not pro-forma) is the responsibility of the Bidder. See the attached Good Faith Effort Compliance Plan (GFECP) (MBD Form-50) for specific requirements.

GOOD FAITH EFFORT COMPLIANCE PLAN (GFECP) REQUIRED (MBD FORM-50). When a Goal has been established, the Bidder must submit with its bid a Good Faith Effort Compliance Plan (GFECP) using the attached MBD Form-50 together with supporting documentation as specified therein. Submittals that do not contain MBD Form-50 when a Goal has been established will be deemed non-responsive. Additional explanation and documentation is required whenever a City-certified subcontractor's quote is not utilized. Any additional information regarding GFECP (post-bid) shall be only upon the City's request for clarification of information submitted with bid and not to "cure" omissions or deficiencies of the bid.

NOTE: When U-WMBEs are included in a Goal, only those City-certified subcontractors whose WMBE Classification is designated "underutilized" will count toward Goal attainment. Refer to MBD Form-70 to identify underutilized WMBEs by subcontract Classification for the applicable project industry category. A prime bidder who is a City-certified WMBE and/or SLBE is not exempt from the GFECP MBD Form-50 requirements.

☐

SUBCONTRACTING GOAL – (DBE) FDOT DISADVANTAGED BUSINESS ENTERPRISE PROGRAM

The City of Tampa is required to use the Florida Department of Transportation (FDOT) Disadvantaged Business Enterprise (DBE) program on contracts with Federal Highway Administration (FHWA) funds. Effective October 1, 2017 through to September 30, 2020, the overall FDOT DBE aspirational goal is 10.65% and is *race neutral*, meaning that FDOT believes the aspirational DBE goal may be achieved entirely through ordinary, competitive procurement methods. Despite the absence of a contract specific DBE goal on this project, the City encourages bidders to seek out and use DBEs and other minority, small businesses. For assistance in identifying certified DBEs, FDOT offers the use of its supportive services program accessed via FDOT's Equal Opportunity Office at http://www.fdot.gov/equalopportunity/serviceproviders.shtm. FDOT DBE rules and regulations apply to this solicitation, including the requirement to report bidder opportunity information in the FDOT Equal Opportunity Compliance (EOC) web-based application within three (3) business days of submission of the bid for ALL subcontractors who quoted bidder for this specific project. The five (5) char/digit LAP Agreement Contract Number for this project is G_____. The web address to the EOC system is: https://fdotwp1.dot.state.fl.us/EqualOpportunityCompliance/Account.aspx/LogIn?ReturnUrl=%2fEqualOpportunityCompliance

NOTE: Regardless of FDOT DBE program applicability, for data collection purposes bidder still must submit City Forms MBD-10 and MBD-20 completed and signed with its bid or the bid will be deemed non-responsive.

DIVERSITY MANAGEMENT INITIATIVE (DMI) DATA REPORTING FORMS REQUIRED FOR ALL CONTRACTS

Bidder must submit, with its bid, completed and signed Forms MBD-10 and MBD-20 to be considered a responsive bid. Specifically, the 'Schedule of All Solicited Sub-(Contractors/Consultants/Suppliers) (Form MBD-10)' listing all subcontractors (including non-certified) solicited and 'Schedule of All -To Be Utilized Sub-(Contractors/Consultants/Suppliers) (Form MBD-20)' listing all subcontractors (including non-certified) to be utilized. Supplemental forms, such as 'Form MBD-40 Official Letter Of Intent' (LOI), can be submitted with the bid or once declared lowest-responsive bidder. After an award, 'DMI Sub-(Contractors/Consultants/Suppliers) Payment Form (Form MBD-30)' is to be submitted with payment requests to report payments to subcontractors and using the on-line automated MBD compliance software system available at https://tampa.diversitysoftware.com

For additional information about the WMBE and SLBE programs contact the Minority and Small Business Development Office at 813-274-5522. (3-18)

INSTRUCTIONS TO BIDDERS
SECTION 1 - SPECIAL INSTRUCTIONS

I-1.11 BID SECURITY:

Surety companies shall have a rating of not less than B+ Class VI as evaluated in the most recently circulated Best KeyRating Guide Property/Casualty.

I-1.12 PUBLIC CONSTRUCTION BOND:

The Bidder who is awarded the Contract will be required to furnish a Public Construction Bond upon the form provided herein, equal to 100 percent of the Contract price, such Bond to be issued and executed by (a) surety company(ies) acceptable to the City and licensed to underwrite contracts in the State of Florida. After execution of the Agreement and before commencing work, the Contractor must provide the City a certified copy of the officially recorded Bond.

I-1.13 AGREEMENT

SECTION 2 – POWERS OF THE CITY'S REPRESENTATIVES, new Article 2.05:
Add the following:

Article 2.05 CITY'S TERMINATION FOR CONVENIENCE:

The City may, at any time, terminate the Contract in whole or in part for the City's convenience and without cause. Termination by the City under this Article shall be by a notice of termination delivered to the Contractor, specify the extent of termination and the effective date.

Upon receipt of a notice of termination, the Contractor shall immediately, in accordance with instructions from the City, proceed with performance of the following duties regardless of delay in determining or adjusting amounts due under this Paragraph:

(a) cease operations as specified in the notice;
(b) place no further orders and enter into no further subcontracts for materials, labor, services or facilities except as necessary to complete continued portions of the Contract;
(c) terminate all subcontracts and orders to the extent they relate to the Work terminated;
(d) proceed to complete the performance of Work not terminated; and
(e) take actions that may be necessary, or that the City may direct, for the protection and preservation of the terminated Work.

The amount to be paid to the Contractor by the City because of the termination shall consist of:

(a) for costs related to work performed on the terminated portion of the Work prior to the effective date including termination costs relative to subcontracts that are properly chargeable to the terminated portion of the Work;
(b) the reasonable costs of settlement of the Work terminated, including accounting, legal, clerical and other expenses reasonable necessary for the preparation of termination settlement proposals and supporting data; additional costs of termination and settlement of subcontracts excluding amounts of such settlements; and storage, transportation, and other costs incurred which are reasonably necessary for the preservation, protection or disposition of the terminated Work; and
(c) a fair and reasonable profit on the completed Work unless the Contractor would have sustained a loss on the entire Contract had it been completed.

Allowance shall be made for payments previously made to the Contractor for the terminated portion of the Work, and claims which the City has against the Contractor under the Contract, and for the value of materials supplies, equipment or other items that are part of the costs of the Work to be disposed of by the Contractor.

SECTION 5 – SUBCONTRACTS AND ASSIGNMENTS, Article 5.01, Page A-7, last paragraph:
Change "…twenty-five (25) percent…" to "…fifty-one (51) percent…"

SECTION 8 – CONTRACTOR'S EMPLOYEES, Article 8.03, Page A-9, delete Article 8.03 in its entirety and Replace with the following new article:

ARTICLE 8.03 EMPLOYMENT OPPORTUNITIES
The Contractor shall, in the performance of the work required to be done under this Contract, employ all workers without discrimination and must not maintain, provide or permit facilities that are segregated.

INSTRUCTIONS TO BIDDERS
SECTION 1 - SPECIAL INSTRUCTIONS

SECTION 10 – PAYMENTS, Article 10.05, Page A-10, 1st Paragraph, 1st Sentence:
Change "…fair value of the work done, and may apply for…" to "…fair value of the work done, and shall apply for…"

SECTION 11 – MISCELLANEOUS PROVISIONS, Article 11.02, Page A-12, 1st Paragraph, 2nd Sentence:
Delete the 2nd Sentence in its entirety and replace it with the following new 2nd Sentence:

Without limiting application of Article 11.07, below, whenever the Contractor is required or desires to use any design, device, material, or process covered by letters of patent or copyright, the Contractor shall indemnify, defend, and hold harmless the City Indemnified Parties (as defined below) from any and all Claims (as defined below) for infringement by reason of the use of any such patented design, device, tool, material, equipment, or process, to be performed under the Contract and damages which may be incurred by reason of such infringement at any time during the prosecution or after completion of the work.

SECTION 11 – MISCELLANEOUS PROVISIONS, Article 11.03, Page A-12:
Delete Article 11.03 in its entirety and replace with the following new article:

ARTICLE 11.03 INTENTIONALLY OMITTED.

SECTION 11 – MISCELLANEOUS PROVISIONS, Article 11.07, Page A-12:
Delete Article 11.07 in its entirety and replace with the following new article:

ARTICLE 11.07 INDEMNIFICATION PROVISIONS
Whenever there appears in this Agreement, or in the other Contact Documents made a part hereof, an indemnification provision within the purview of Chapter 725.06, Laws of Florida, the monetary limitation on the extent of the indemnification under each such provision shall be One Million Dollars or a sum equal to the total Contract price, whichever shall be the greater.

Contractor releases and agrees to defend, indemnify and hold harmless the City, its officers, elected and appointed officials, employees, and/or agents (collectively, "City Indemnified Parties") from and against any and all losses, liabilities, damages, penalties, settlements, judgments, charges, or costs (including without limitation attorneys' fees, professional fees, or other expenses) of every kind and character arising out of any and all claims, liens, is entitled to indemnification hereunder. This obligation shall in no way be limited in any nature whatsoever by any limitation on the amount or type of Contractor's insurance coverage.

The parties agree that to the extent the written terms of this indemnification are deemed by a court of competent jurisdiction to be in conflict with any provisions of Florida law, in particular Sections 725.06 and 725.08, Florida Statutes, the written terms of this indemnification shall be deemed by any court of competent jurisdiction to be modified in such a manner as to be in fully and complete compliance with all such laws and to contain such limiting conditions or limitations of liability, or to not contain any unenforceable or prohibited term or terms, such that this indemnification shall be enforceable in accordance with and to the maximum extent permitted by Florida law.

The obligation of Contractor under this Article is absolute and unconditional; it is not conditioned in any way on any attempt by a City Indemnified Party to collect from an insurer any amount under a liability insurance policy, and is not subject to any set-off, defense, deduction, or counterclaim that the Contactor might have against the City Indemnified Party. The duty to defend hereunder is independent and separate from the duty to indemnify, and the duty to defend exists regardless of any ultimate liability of Contractor, the City, and any City Indemnified Party. The duty to defend arises immediately upon presentation of a Claim by any party and written notice of such Claim being provided to Contractor. Contractor's defense and indemnity obligations hereunder will survive the expiration or earlier termination of this Contract.

Contractor agrees and recognizes that the City Indemnified Parties shall not be held liable or responsible for any Claims which may result from any actions or omissions of Contractor in which the City Indemnified Parties participated either through providing data or advice and/or review or concurrence of Contractor's actions. In

reviewing, approving or rejecting any submissions by Contractor or other acts of Contractor, the City in no way assumes or shares any responsibility or liability of Contractor or any tier of subcontractor/subconsultant/supplier, under this Contract.

In the event the law is construed to require a specific consideration for such indemnification, the parties agree that the sum of Ten Dollars and 00/100 ($10.00), receipt of which is hereby acknowledged, is the specific consideration for such indemnification and the providing of such indemnification is deemed to be part of the specifications with respect to the services provided by Contractor.

SECTION 11 – MISCELLANEOUS PROVISIONS, Article 11.12, Page A-13:
Change Article 11.12 to add the following new language after existing text:

The City of Tampa is a public agency subject to Chapter 119, Florida Statutes. In accordance with Florida Statutes, 119.0701, Contractor agrees to comply with Florida's Public Records Law, including the following:

1. Contractor shall keep and maintain public records required by the City to perform the services under this Agreement;

2. Upon request by the City, provide the City with copies of the requested records, having redacted records in total on in part that are exempt from disclosure by law or allow the records to be inspected or copied within a reasonable time (with provision of a copy of such records to the City) on the same terms and conditions that the City would provide the records and at a cost that does not exceed that provided in Chapter 119, Florida Statutes, or as otherwise provided by law;

3. Ensure that records, in part or in total, that are exempt or that are confidential and exempt from disclosure requirements are not disclosed except as authorized by law for the duration of the Agreement term and following completion (or earlier termination) of the Agreement if Contractor does not transfer the records to the City;

4. Upon completion (or earlier termination) of the Agreement, Contractor shall within 30 days after such event either transfer to the City, at no cost, all public records in possession of the Contractor or keep and maintain the public records in compliance with Chapter 119, Florida Statutes. If Contractor transfers all public records to the City upon completion (or earlier termination) of the Agreement, Contractor shall destroy any duplicate records that are exempt or confidential and exempt from public records disclosure requirements. If Contractor keeps and maintains public records upon completion (or earlier termination) of the Agreement, Contractor shall meet all applicable requirements for retaining public records. All records stored electronically must be provided to the City in a format that is compatible with the information technology systems of the agency.

The failure of Contractor to comply with Chapter 119, Florida Statutes, and/or the provisions set forth in this Article shall be grounds for immediate unilateral termination of the Agreement by the City; the City shall also have the option to withhold compensation due Contractor until records are received as provided herein.

IF CONTRACTOR HAS QUESTIONS REGARDING THE APPLICATION OF CHAPTER 119, FLORIDA STATUTES, TO CONTRACTOR'S DUTY TO PROVIDE PUBLIC RECORDS RELATING TO THIS AGREEMENT, CONTACT THE CUSTODIAN OF PUBLIC RECORDS AT 813-274-8598, JIM.GREINER@TAMPAGOV.NET, AND CONTRACT ADMINISTRATION DEPARTMENT, TAMPA MUNICIPAL OFFICE BUILDING, 4TH FLOOR, 306 E. JACKSON ST. TAMPA, FLORIDA 33602.

I-1.14 Contractors must utilize the U.S. Department of Homeland Security's E-Verify Systems to verify the employment eligibility of all persons employed during the term of the Contract to perform employment duties within the State of Florida and all persons, including subcontractors, assigned by Contractor to perform work pursuant to the contract.

INSTRUCTIONS TO BIDDERS
SECTION 1 - SPECIAL INSTRUCTIONS

I-1.15 GENERAL PROVISIONS; G-2.02 Copies Furnished to Contractor: Replace the first paragraph with the following:

The Contractor shall acquire for its use copies of the plans and specifications as needed, which may be downloaded from the City's web site, at http://www.tampagov.net/contract-administration/programs/construction-project-bidding.

Bidder as part of the solicitation process (and as Contractor if Bidder is successful) may hold, come into possession of, and/or generate certain building plans, blueprints, schematic drawings, including draft, preliminary, and final formats, which depict the internal layout and structural elements of a building, facility, or other structure owned or operated by the City or an agency (singularly or collectively "Exempt Plans"), which pursuant to Section 119.071(3), Florida Statutes, are exempt from Section 119.07(1), Florida Statutes and Section 24(a), Art. I of the Florida State Constitution. Contractor certifies it has read and is familiar the exemptions and obligations of Section 119.071(3), Florida Statutes; further that Contractor is and shall remain in compliance with same, including without limitation maintaining the exempt status of such Exempt Plans, for so long as any Exempt Plans are held by or otherwise in its possession.

I-1.16 PAYMENT DISPUTE RESOLUTION

Any dispute pertaining to pay requests must be presented to the City pursuant to Executive Order 2003-1.

I-1.17 SCRUTINIZED COMPANIES CERTIFICATION

Section 287.135, Florida Statutes, prohibits agencies or local governmental entities from contracting for goods or services of any amount with companies that are on the Scrutinized Companies that Boycott Israel List or are engaged in a boycott of Israel, and of $1 million or more with companies that are on either the Scrutinized Companies with Activities in Sudan List or the Scrutinized Companies with Activities in the Iran Petroleum Energy Sector List, or are engaged in business operations in Cuba or Syria. Specifically, Section 287.135(2), Florida Statutes, states: "A company is ineligible to, and may not, bid on, submit a proposal for, or enter into or renew a contract with an agency or local governmental entity for goods or services of: (a) Any amount if, at the time of bidding on, submitting a proposal for, or entering into or renewing such contract, the company is on the Scrutinized Companies that Boycott Israel List, created pursuant to s. 215.4725, or is engaged in a boycott of Israel; or (b) One million dollars or more if, at the time of bidding on, submitting a proposal for, or entering into or renewing such contract, the company: 1. Is on the Scrutinized Companies with Activities in Sudan List or the Scrutinized Companies with Activities in the Iran Petroleum Energy Sector List, created pursuant to s. 215.473; or 2. Is engaged in business operations in Cuba or Syria."

Upon submitting its bid or proposal, a bidder/proposer: (i) certifies the company is not in violation of Section 287.135, Florida Statutes, and shall not be in violation at the time the company enters into or renews any resulting contract; and (ii) agrees any such resulting contract shall be deemed to contain a provision that allows the City, at its option, to terminate such contract for cause if the company is found to have submitted a false certification, been placed on one or any of the foregoing Lists, been engaged in a boycott of Israel, or been engaged in business operations in Cuba or Syria.

I-1.18 FLORIDA'S PUBLIC RECORDS LAW; DATA COLLECTION

Pursuant to Section 119.071(5)(a)2a, Florida Statutes, social security numbers shall only be collected from Bidders and/or Contractor by the City should such number be needed for identification, verification, and/or tax reporting purposes. To the extent Bidder and/or Contractor collects an individual's social security number in the course of acting on behalf of the City pursuant to the terms and conditions of its Proposal or, if awarded, the Agreement, Bidder and/or Contractor shall follow the requirements of Florida's Public Records Law.

SECTION 2
GENERAL INSTRUCTIONS

I-2.01 BIDDER'S RESPONSIBILITY
Before submitting Proposals, Bidders shall carefully examine the entire site of the proposed work and adjacent premises and the various means of approach and access to the site, and make all necessary investigations to inform themselves thoroughly as to the facilities necessary for delivering, placing and operating the necessary construction equipment, and for delivering and handling materials at the site, and inform themselves thoroughly as to all difficulties involved in the completion of all the work in accordance with the Contract Documents.

Bidders must examine the Plans, Specifications, and other Contract Documents and shall exercise their own judgment as to the nature and amount of the whole of the work to be done, and for the bid prices must assume all risk of variance, by whomsoever made, in any computation or statement of amounts or quantities necessary to complete the work in strict compliance with the Contract Documents.

Elevations of the ground are shown on the Plans and are believed to be reasonably correct, but are not guaranteed to be absolutely so and are presented only as an approximation. Bidders shall satisfy themselves as to the correctness of all elevations.

The City may have acquired, for its own use, certain information relating to the character of materials, earth formations, probable profiles of the ground, conditions below ground, and water surfaces to be encountered at the site of the proposed work. This information, if it exists, is on file at the offices of the Department of Public Works and Bidders will be permitted to see and examine this information for whatever value they consider it worth. However, this information is not guaranteed, and Bidders should satisfy themselves by making borings or test pits, or by such other methods as they may prefer, as to the character, location, and amounts of water, peat, clay, sand, quicksand, gravel, boulders, conglomerate, rock, gas or other material to be encountered or work to be performed.

Various underground and overhead structures and utilities are shown on the plans. The location and dimensions of such structures and utilities, where given, are believed to be reasonably correct, but do not purport to be absolutely so. These structures and utilities are plotted on the Plans for the information of the Bidders, but information so given is not to be construed as a representation or assurance that such structures will be found or encountered as plotted, or that such information is complete or accurate.

I-2.02 FORM, PREPARATION AND PRESENTATION OF PROPOSALS
Each Proposal shall be submitted upon the Proposal Form and in accordance with the instructions included herein. The Proposal Form must not be detached herefrom. All blank spaces for bid prices must be filled in, in both words and figures, with the unit or lump sum prices, or both, for which the Proposal is made. The computed total price for each unit price Contract Item shall be determined by multiplying the estimated quantity of the item, as set forth in the Proposal Form, by the corresponding unit price bid for such item. The resulting product shall be entered in the appropriate blank space under the column headed "Computed Total Price for Item". The lump sum price bid for each lump sum price Contract Item shall also be entered in the column headed "Computed Total Price for Item". If a Proposal contains any omissions, erasures, alterations, additions, or items not called for in the itemized Proposal, or contains irregularities of any kind, such may constitute sufficient cause for rejection of the Proposal. In case of any discrepancy in the unit price or amount bid for any item in the Proposal, the price as expressed in written words will govern. In no case is the Agreement Form to be filled out or signed by the Bidder.

In the case of certain jobs bid Lump Sum a "Schedule of Unit Prices" must be filled out as an attachment to the Lump Sum proposal. These prices may be used as a guide for the negotiation of change orders, at the City's option.

The proposal must be signed and certified and be presented on the prescribed form in a sealed envelope on/or before the time and at the place stated in the Notice of Bidders, endorsed with the name of the person, firm or corporation presenting it, the date of presentation, and the title of the work for which the Proposal is made.

Unless the apparent low bidder is now engaged in or has recently completed contract work for the City of Tampa, he, if requested, shall furnish to the City, after the opening of bids and prior to award, a summary statement of record of construction experience over the past three (3) years with proper supporting evidence, and, if required by the City, shall also furnish a list of equipment and other facilities pertinent to and available for the proper execution of the proposed work, and a statement of financial resources to the extent necessary to establish ability to carry on the proposed work. The City may make further investigations as considered necessary with respect to responsibility of the Bidder to whom it appears may be awarded the Contract.

If forwarded by mail, the sealed envelope containing the Proposal, endorsed as directed above, must be enclosed in another envelope addressed as specified in the Notice to Bidders and sent by registered mail.

I-2.03 ADDENDA AND INTERPRETATIONS
No interpretation of the meaning of the Plans, Specifications, or other Contract Documents will be made to any Bidder orally.

Every request for such interpretation must be in writing, addressed to the Contract Administration Department, Tampa Municipal Office Building, 4th Floor North, City Hall Plaza, Tampa, Florida 33602. To be given consideration, such request must be received at least seven (7) days prior to the date fixed for the opening of the Proposals. Any and all such interpretations and any supplemental instructions will be in the form of written addenda which, if issued, will be sent by certified mail, with return receipt requested, to all prospective bidders at the respective addresses furnished, for such purposes, not later than three (3) working days prior to the date fixed for the opening of the Proposals, and if requested, a copy will be delivered to the prospective bidder's representative. Failure of any Bidder to receive any such addenda shall not relieve said Bidder from any obligation under his Proposal as submitted. All addenda so issued shall become part of the Contract Documents.

I-2.04 BID SECURITY
Each Proposal must be accompanied by a certified or cashier's check issued by a solvent bank or trust company and payable at sight to the City of Tampa, in compliance with Section 255.051 Florida Statutes, or a Bid Bond upon the form provided herein, in an amount of not less than five percent of the sum of the computed total amount of the Bidder's Proposal as a guarantee that if the Proposal is accepted, the Bidder will execute and fill in the proposed Contract and Public Construction Bond within twenty (20) days after notice of award of the Contract. Certified checks shall have all necessary documentary revenue stamps attached if required by law. Surety on Bid Bonds shall be a duly authorized surety company authorized to do business in the State of Florida, and all such Bonds shall be issued or countersigned by a local resident producing agent, and satisfactory evidence of the authority of the person or persons executing such Bond to Execute the same shall be submitted with the Bond. Bid Bonds shall be issued by a surety company acceptable to the City.

Within ten (10) days after the opening of Proposals, the bid security of all but the three lowest Bidders will be returned. The bid security of the remaining two Bidders whose Proposals are not accepted will be

returned within ten (10) days after the execution of the Contract, or, if no such Contract has been executed, within ninety (90) days after the date of opening Proposals. The bid security of the Bidder whose Proposal is accepted will be returned only after he has duly executed the Contract and furnished the required Public Construction Bond and insurance.

Should it be necessary for the City to retain the bid security and said bid security is in the form of checks, the checks of these Bidders will be returned if replaced by Bid Bonds in an amount equal to the amount of the checks of such Bidders in such form and issued by a surety company acceptable to the City.

A Bidder may withdraw his Proposal before the time fixed for the opening of Proposals, without prejudice to himself, by communicating his purpose, in writing, to the Mayor and City Council, and when his communication is received, the Proposal will be handed to him or his authorized agent unopened. No Bidder may withdraw his Proposal within ninety (90) days after the day of opening Proposals.

The Bidder whose Proposal is accepted shall enter into a written contract, upon the Agreement form included herein, for the performance of the work and furnish the required Public Construction Bond within twenty (20) days after written notice by the City of Award of Contract has been served on such Bidder personally or after receipt of the written notice by registered mail to such Bidder at the address given in his Proposal.

If the Bidder to whom a Contract is awarded refuses or neglects to execute it or fails to furnish the required Public Construction Bond within twenty (20) days after receipt by him of the Notice of Award of Contract, the amount of his bid security shall be forfeited and shall be retained by the City as liquidated damages, and not as a penalty, it being now agreed that said sum is a fair estimate of the amount of damages that the City will sustain in case said Bidder fails to enter into a Contract and furnish the required Public Construction Bond. If a Bid Bond was furnished, the full amount of the Bond shall become due and payable as liquidated damages caused by such failure. The full amount of the bid security shall be forfeited as liquidated damages without consideration of the fact that an award may be less than the full amount of the Bidder's Proposal, excepting that the award shall be within the conditions of said Proposal relating to the basis of consideration for an award. No plea of mistake in the bid or misunderstanding of the conditions of forfeiture shall be available to the Bidder for the recovery of his deposit or as a defense to any action based upon the neglect or refusal to execute a contract.

I-2.05 LAWS AND REGULATIONS
The Bidder who is awarded the Contract must comply with all laws of the State of Florida, and all applicable Ordinances of the City of Tampa respecting labor and compensation and with all other statutes, ordinances, rules and regulations applicable and having the force of law.

I-2.06 PUBLIC CONSTRUCTION BOND
The Bidder who is awarded the Contract will be required to furnish a Public Construction Bond upon the form provided herein, equal to 100 percent of the Contract price, such Bond to be executed by a surety company acceptable to the City of Tampa and licensed to underwrite contracts in the State of Florida. Surety companies shall have a rating of not less than: B+ Class VI as evaluated in the most recently circulated BEST'S KEY RATING GUIDE PROPERTY-LIABILITY.

I-2.07 SIGNATURE AND QUALIFICATIONS OF BIDDERS
Proposals must be signed in ink by the Bidder with signature in full. When a firm is a Bidder, the Proposal shall be signed in the name of the firm by one or more of the partners. When a corporation is a Bidder the officer signing shall set out the corporate name in full beneath which he shall sign his name and give the title of his office. The Proposal shall also bear the seal of the corporation attested by its secretary. Anyone signing the Proposal as agent must file with it legal evidence of his authority to do so.

Bidders who are nonresident corporations shall furnish to the City a duly certified copy of their permit to transact business in the State of Florida, signed by the Secretary of State, within ten days of the notice to do so. Such notice will be given to Bidders who are nonresident corporations, to whom it appears an award will be made, and the copy of the permit must be filed with the City before the award will be made. Failure to promptly submit this evidence of qualification to do business in the State of Florida may be basis for rejection of the Proposal.

I-2.08 REJECTION OF PROPOSALS
The City reserves the right to reject any Proposal if investigation of the Bidder fails to satisfy the City that such Bidder is properly qualified to carry out the obligations and to complete the work contemplated therein. Any or all Proposals will be rejected if there is reason to believe that collusion exists among Bidders. Proposals will be considered irregular and may be rejected if they show serious omissions, alterations in form, additions not called for, conditions or unauthorized alternates, or irregularities of any kind. The City reserves the right to reject any or all Proposals and to waive such technical errors as may be deemed best for the interests of the City.

I-2.09 QUANTITIES ESTIMATED ONLY
The estimate of quantities of the various items of work and materials, if set forth in the Proposal Form, is approximate only and is given solely to be used as a uniform basis for the comparison of Proposals. The quantities actually required to complete the Contract work may be less or more than so estimated, and if awarded a Contract for the work specified, the Contractor agrees that he will not make any claim for damages or for loss of profits because of a difference between the quantities of the various classes of work assumed for comparison of Proposals and quantities of work actually performed. The City further reserves the right to vary the quantities in any amount.

I-2.10 COMPARISON OF PROPOSALS
Except jobs bid on a "One Lump Sum" basis, proposals will be compared on the basis of a total computed price arrived at by taking the sum of the estimated quantity of each time and the corresponding unit price of each item, and including any lump sum prices on individual items.

The computed total prices for individual Contract Items and the total computed price for the entire Contract, as entered by the Bidder in the Proposal Form, are for convenience only and are subject to correction in the tabulation and computation of the Proposals.

I-2.11 BASIS OF AWARD
The Contract will be awarded, if at all, to the lowest responsible Bidder or Bidders, as determined by the City and by the terms and conditions of the Contract Documents. Unless all bids are rejected, the award will be made within ninety (90) days after the opening of Proposals. The successful Bidder will be required to possess, or obtain, a valid City Occupational License.

I-2.12 INSURANCE REQUIRED
The successful Bidder and his subcontractors will be required to procure and pay for insurance covering the work in accordance with the provisions of Article 6.02 of the Agreement as indicated on special instructions pages beginning with INS-1.

I-2.13 NO ASSIGNMENT OF BID
No Bidder shall assign his bid or any rights thereunder.

I-2.14 NONDISCRIMINATION IN EMPLOYMENT
Contracts for work under this Proposal will obligate the contractors and subcontractors not to discriminate in employment practices.

Bidders must, if requested, submit with their initial bid a signed statement as to whether they have previously performed work subject to the President's Executive Order Nos. 11246 and 11375.
Bidders must, if requested, submit a compliance report concerning their employment practices and policies in order to maintain their eligibility to receive the award of the Contract.

Successful Bidders must, if requested, submit a list of all subcontractors who will perform work on the project and written,

signed statement from authorized agents of the labor pools with which they will or may deal for employees on the work together with supporting information to the effect that said labor pools practices and policies are in conformity with Executive Order No. 11246 and that said labor pools will affirmatively cooperate in or offer no hindrance to the recruitment, employment and equal treatment of employees seeking employment and performing work under the Contract, or a certification as to what efforts have been made to secure such statements when such agents or labor pools have failed or refused to furnish them prior to the award of the Contract.

I-2.15 LABOR STANDARDS
The Bidder's attention is directed to the Contract Provisions of the Labor Standards for federally assisted projects which may be attached to and made a part of the Agreement.

I-2.16 NOTICE TO LABOR UNIONS
If applicable, the successful Bidder will be required to provide Labor Unions and other organizations of workers a completed copy of the form entitled "Notice to Labor Unions or Other Organizations of Workers", and such form may be made a part of the Agreement.

I-2.17 NOTICE TO PROSPECTIVE FEDERALLY-ASSISTED CONSTRUCTION CONTRACTORS
A Certification of Nonsegregated Facilities, as required by the May 9, 1967, Order (32 F.R. 7439, May 19, 1967) on Elimination of Segregated Facilities, by the Secretary of Labor, must be submitted to said Secretary prior to the award of a federally-assisted construction and Contract exceeding $10,000 which is not exempt from the provisions of the Equal Opportunity Clause. The form of certification may be bound herein following the form of Bid Bond.

Contractors receiving federally-assisted construction Contract awards exceeding $10,000 which are not exempt from the provisions of the Equal Opportunity Clause will be required to provide for the forwarding of the following notice to prospective subcontractor for supplies and construction contracts where the subcontracts exceed $10,000 and are not exempt from the provisions of the Equal Opportunity Clause:

NOTICE TO PROSPECTIVE SUBCONTRACTORS OF REQUIREMENT
FOR CERTIFICATIONS OF NONSEGREGATED FACILITIES

"A Certification of Nonsegregated Facilities, as required by the May 9, 1967, Order (32 F.R. 7439, May 19, 1967) on Elimination of Segregated Facilities, by the Secretary of Labor, must be submitted prior to the award of a subcontract exceeding $10,000 which is not exempt from the provisions of the Equal Opportunity Clause."

"Contractors receiving subcontract awards exceeding $10,000 which are not exempt from the provisions of the Equal Opportunity Clause will be required to provide from the forwarding of this notice to prospective subcontractors for supplies and construction contracts where the subcontracts exceed $10,000 and are not exempt from the provisions of the Equal Opportunity Clause."

The United States requires a pre-award conference if a proposed construction contract exceeds one million dollars to determine if the the prospective contractor is in compliance with the Equal Employment Opportunity requirements of Executive Order 11246 of September 24, 1965. In such instances, a meeting may be scheduled at which the prospective contractor must specify what affirmative action he has taken or proposed to take to assure equal employment opportunity which must be approved by the United States before award of the contract will be authorized.

Bidders must be prepared to submit an Equal Employment Opportunity (EEO) plan at a pre-award conference. The plan must include bidding opportunities offered by the Bidder to minority subcontractors.

On October 13, 1971, President Nixon issued Executive Order 11246 emphasizing the government's commitment to the promotion of minority business enterprise. Accordingly, the United States is firmly committed to the utilization of available resources to support this important program. U.S. agencies are most interested in realizing minority participation on the subject. Achieving equal employment opportunity compliance is required through Executive Order 11246. WE cannot emphasize too strongly that minority subcontractors be extended subcontractors bidding opportunities as but one step in your affirmative action policy.

Due to the importance of this contract, U.S. Agencies may conduct an EEO Conference prior to the award of the Contract. It is suggested that the responsive Bidder confirm the minority subcontractors he contacted for bids or quotations in his EEO plan submitted at the conference.

I-2.18 EEO AFFIRMATIVE ACTION REQUIREMENTS
By the submission of a Proposal, each Bidder acknowledges that he understands and will agree to be bound by the equal opportunity requirements of Federal regulations which shall be applicable throughout the performance of work under any contract awarded pursuant to solicitation. Each Bidder agrees that if awarded a contract, he will similarly bind contractually each subcontractor. In policies, each Bidder further understands and agrees that if awarded a contract, he must engage in Affirmative Action directed to promoting and ensuring equal employment opportunity in the work force used under the contract (and he must require contractually the same effort of all subcontractors whose subcontracts exceed $100,000). The Bidder understands and agrees that "Affirmative Action" as used herein shall constitute a good faith effort to achieve and maintain minority employment in each trade in the on-site work force used on the project. * * * * * * * END of SECTION * * * * * * *

CITY OF TAMPA INSURANCE REQUIREMENTS

Prior to commencing any work or services or taking occupancy under that certain written agreement or award (for purposes of this document, Agreement) between the City of Tampa, Florida (City) and Firm/Awardee/Contractor/Consultant/Lessee/non-City party, etc. (for purposes of this document, Firm) to which this document is attached and incorporated as an Exhibit or otherwise, and continuing during the term of said Agreement (or longer if the Agreement and/or this document so requires), Firm shall provide, pay for, and maintain insurance against claims for injuries to persons (including death) or damages to property which may arise from or in connection with the performance of the Agreement (including without limitation occupancy and/or use of certain property/premises) by Firm, its agents, representatives, employees, suppliers, subtenants, or subcontractors (which term includes sub-consultants, as applicable) of any tier subject to the terms and conditions of this document. Firm's maintenance of insurance coverage as required herein is a material element of the Agreement and the failure to maintain or renew coverage or provide evidence of same (defined to include without limitation Firm's affirmative duty to provide from time to time upon City's request certificates of insurance, complete and certified copies of Firm's insurance policies, forms, and endorsements, information on the amount of claims payments or reserves chargeable to the aggregate amount of coverage(s) whether during the term of the Agreement or after as may be requested by the City in response to an issue or potential claim arising out of or related to the Agreement to which Firm's insurance obligations hereunder may apply or possibly help mitigate) may be treated as a material breach of the Agreement. Should at any time Firm not maintain the insurance coverages required, City at its sole option (but without any obligation or waiver of its rights) may (i) terminate the Agreement or (ii) purchase such coverages as City deems necessary to protect itself (charging Firm for same) and at City's option suspending Firm's performance until such coverage is in place. If Firm does not reimburse City for such costs within 10 days after demand, in addition to any other rights, City shall also have the right to offset such costs from amounts due Firm under any agreement with the City. All provisions intended to survive or to be performed subsequent to the expiration or termination of the Agreement shall survive, including without limitation Firm's obligation to maintain or renew coverage, provide evidence of coverage and certified copies of policies, etc. upon City's request and/or in response to a potential claim, litigation, etc.

The City reserves the right from time to time to modify or waive any or all of these insurance requirements (or to reject policies) based on the specific nature of goods/services to be provided, nature of the risk, prior experience, insurer, coverage, financial condition, failure to operate legally, or other special circumstances. If Firm maintains broader coverage and/or higher limits than the minimums shown herein, the City requires and shall be entitled to such broader coverage and/or higher limits maintained by Firm. Any available insurance proceeds in excess of the specified minimum limits of insurance and coverage shall be available to the City. No representation is made that the minimum insurance requirements are sufficient to cover Firm's interests, liabilities, or obligations. Required insurance shall not limit Firm's liability.

Firm acknowledges and agrees Firm and not the City is the party in the best position to determine applicability (e.g. "IF APPLICABLE"), confirm, and/or verify its insurance coverage. Acceptance by the City, or by any of its employees, representatives, agents, etc. of certificates or other documentation of insurance or policies pursuant to the terms of this document and the Agreement evidencing insurance coverages and limits does not constitute approval or agreement that the insurance requirements have been met or that coverages or policies are in compliance. Furthermore, receipt, acceptance, and/or approval of certificates or other documentation of insurance or policies or copies of policies by the City, or by any of its employees, representatives, agents, etc., which indicate less coverage than required does not constitute a waiver of Firm's obligation to fulfill these insurance requirements.

MINIMUM SCOPE AND LIMIT OF INSURANCE [1]

A. Commercial General Liability (CGL) Insurance on the most current Insurance Services Office (ISO) Form CG 00 01 or its equivalent on an "occurrence" basis (Modified Occurrence or Claims Made forms are not acceptable without prior written consent of the City). Coverage must be provided to cover liability contemplated by the Agreement including without limitation premises and operations, independent contractors, contractual liability, products and completed operations, property damage, bodily, personal and advertising injury, contractual liability, explosion, collapse, underground coverages, personal injury liability, death, employees-as-insureds. Products and completed operations liability coverage maintained for at least 3 years after completion of work. Limits shall not be less than $1M per occurrence and $2M general aggregate for Agreements valued at $2M or less; if valued over $2M, a general aggregate limit that equals or exceeds the Agreement's value. If a general aggregate limit applies; it shall apply separately to the project/location (ISO CG 2S 03 or 2S 04 or equivalent). **(ALWAYS APPLICABLE)**

B. Automobile Liability (AL) Insurance in accordance with Florida law, as to the ownership, maintenance, and use of all owned, non-owned, leased, or hired vehicles. AL insurance shall not be less than: (a) $500,000 combined single limit each occurrence bodily injury and property damage for Agreements valued at $100,000 or less or (b) $1M combined single limit each occurrence bodily injury and property damage for Agreements valued over $100,000. If transportation of hazardous material involved, the MCS-90 endorsement (or equivalent). **(ALWAYS APPLICABLE)**

C. Worker's Compensation (WC) & Employer's Liability Insurance for all employees engaged under the Agreement, Worker's Compensation as required by Florida law. Employer's Liability with minimum limits of (a) $500,000 bodily injury by accident and each accident, bodily injury by disease policy limit, and bodily injury by disease each employee for Agreements valued at $100,000 and under or (b) $1M bodily injury by accident and each accident, bodily injury by disease policy limit, and bodily injury by disease each for all other Agreements. **(ALWAYS APPLICABLE)**

D. Excess (Umbrella) Liability Insurance for Agreements valued at $2M or more, at least $4M per occurrence in excess of underlying limits and no more restrictive than underlying coverage for all work performed by Firm. May also compensate for a deficiency in CGL, AL, or WC. **(ALWAYS APPLICABLE)**

E. Builder's Risk Insurance for property loss exposure associated with construction/renovation/additions to buildings or structures, including materials or fixtures to be incorporated. Must be "All Risk" form with limits of no less than the project's completed value, have no coinsurance penalties, eliminate the "occupancy clause", cover Finn (together with its contractors, subcontractors of every tier, and suppliers), and name City as a Loss Payee. **(IF APPLICABLE)**

F. Installation Floater coverage for property (usually highly valued equipment or materials such as compressors, generators, etc.) during its installation. Coverage must be "All Risk" including installation and transit for no less than 100% of the installed replacement cost value. **(IF APPLICABLE)**

G. Architects & Engineers Liability/ Professional Liability (E&O)/ Contractors Professional Liability (CPrL)/ Medical Malpractice Insurance where Agreement involves Florida-regulated professional services (e.g. architect, engineer, design-builder, CM, accountant, appraiser, investment banker medical professional) at any tier, whether employed or independent, vicarious design liability exposure (e.g. construction means & methods, design supervision), value engineering, constructability assessments/reviews, BIM process, and/or performance specifications. Limits of at least $1M per occurrence and $2M aggregate; deletion of design/ build liability exclusions, as applicable, and maintained for at least 3 years after completion of work/services and City's acceptance of same. **(IF APPLICABLE)**

H. Railroad Protective Liability CRPL) Insurance for construction within 50ft of operated railroad track(s) or where affects any railroad bridge, trestle, tunnel, track(s) roadbed, or over/under pass. Subject to involved rail road's approval prior to commencement of work. **(IF APPLICABLE).**

I. Pollution and/or Asbestos Legal Liability Insurance where Agreement involves asbestos and/or environmental hazards/contamination risks (defined broadly, e.g. lead, mold, bacteria, fuel storage, underground work, cleanup (owned or non-owned sites), pollutant generation/transportation, marine/natural resource damage, contamination claim, restitution, business interruption, mold, fungus, lead-based paint, 3rd party claims/removal, etc.), with limits of at least $1M per occurrence and $2M aggregate, maintained for at least 3 years after Agreement completion. **(IF APPLICABLE)**

J. Cyber Liability Insurance where Agreement involves portals allowing access to obtain, use, or store data; managed dedicated servers; cloud hosting services; software/hardware; programming; and/or other IT services

[1] "M" indicates million(s), for example $1M is $1,000,000

Document updated and approved by Legal and Risk Management as of 08/16/2016

and products are involved. Limits of not less than $2M per occurrence and $2M aggregate. Coverage sufficiently broad to respond to duties and obligations undertaken by Firm, and shall include, but not be limited to, claims involving infringement of intellectual property/copyright, trademark, trade dress, invasion of privacy violations, damage to or destruction of electronic information, information theft, release of confidential and/or private information, alteration of electronic information, extortion, virus transmission, and network security. Coverage, as applicable and with sufficient limits to respond, for breach response costs, regulatory fines and penalties, credit monitoring expenses. **(IF APPLICABLE)**

K. Drone/UAV Liability Insurance where Agreements involves unmanned aerial vehicles/drones. Coverage to include products and completed operations, property damage, bodily injury with limits no less than $1M per occurrence, and $2M aggregate; may be provided by CGL endorsement subject to City's prior written approval. **(IF APPLICABLE)**

L. Longshore & Harbor Workers' Compensation Act/Jones Act for work being conducted near, above, or on "navigable waters" for not less than the above Employer's Liability Insurance limit. **(IF APPLICABLE)**

M. Garagekeeper/Hangerkeeper/Marina Operator Legal Liability Insurance and/or Hull/P&IInsurance where parking lot, valet, dealership, garage services, towing, etc. and/or operation of a hangar, marina, or air plane/ship repairer, providing safe berth, air/watercraft storage/docking (on land/ in water), fueling, tours, charters, ferries, dredges, tugs, mooring, towing, boat/aircraft equipment/repair/alteration/maintenance, etc.; cover- age against liability for damage to vehicles air/watercraft, their machinery in Firm's care, custody, or control both private & commercial. Limits at least equal to greater of $1M, value of max number of vehicles that may be in Firm's custody, or of most costly object in Firm's custody. (IF **APPLICABLE)**

N. Property Insurance and Interruption of Business CIOB) Insurance where premises, building, structure, or improved real property is leased, licensed, or otherwise occupied by Firm. Property Insurance against all risks of loss to any occupant/tenant improvements at full replacement cost with no coinsurance penalty, including fire, water, leak damage, and flood, as applicable, vandalism and malicious mischief endorsements. IOB by which minimum monthly rent will be paid to City for up to 1 year if premises are destroyed, rendered inaccessible or untenantable, including disruption of utilities, water, or telecommunications. **(IF APPLICABLE)**

0. Liquor Liability/Host Liquor Liability where Firm directly or indirectly provides alcoholic beverages, limits of at least $1M per occurrence and $1M aggregate. **(IF APPLICABLE)**

P. Educators Legal Liability Insurance where day care, after school program, recreational activities, etc. limits per G above. **(IF APPLICABLE)**

ADDITIONAL REQUIREMENTS

ACCEPTABILTIY OF INSURERS- Insurance is to be placed with insurers admitted in the State of Florida and who have a current A.M. Best rating of no less than **A-:VII** or, if not rated by A.M. Best, as otherwise approved by the City in advance and in writing.

ADDITONAL INSURED - **City, its elected officials, departments, officers, officials, employees, and volunteers together with, as applicable, any associated lender of the City shall be covered as additional insureds on all liability coverage** (e.g. CGL, AL, and Excess (Umbrella) Liability) as to liability arising out of work or operations performed by or on behalf of Firm including materials, parts, or equipment furnished in connection with such work or operations and automobiles owned, leased, hired, or borrowed by or on behalf of Firm. Coverage can be provided in the form of an endorsement to Firm's insurance (at least as broad as ISO Form CG 20 10 11 85 or **both** CG 10 20, CG 20 26, CG 20 33, or CG 20 38 **and** CG 20 37 if later revisions used).

CANCELLATION/NON-RENEWAL – Each insurance policy shall provide that at least 30 days written notice must be given to City of any cancellation, intent to non-renew, or material reduction in coverage (except aggregate liability limits) and at least 10 days' notice for non-payment of premium. Firm shall also have an independent duty to notify City in like manner, within 5 business days of Firm's receipt from its insurer of any notices of same. **If** any policy's aggregate limit is reduced, Firm shall directly take steps to have it reinstated. Notice and proof of renewal/continued coverage/certifications, etc. shall be sent to the City's notice (or Award contact) address as stated in the Agreement with a copy to the following:

☑ Contract Administration Department, 306 E Jackson St, Tampa, FL 33602 ☐ Purchasing Department, 306 E Jackson Street, Tampa, FL 33602

☐ Other:_____

CERTIFICATE OF INSURANCE (COI) – to be provided to City by insurance carrier prior to Firm beginning any work/services or taking occupancy and, if the insurance expires prior to completion of the work or services or Agreement term (as may be extended), a renewal COI at least 30 days before expiration to the above address(es). COIs shall specifically identify the Agreement and its subject (project, lease, etc.), shall be sufficiently comprehensive to insure City (named as additional insured) and Firm and to certify that coverage extends to subcontractors' acts or omissions, and as to permit the City to determine the required coverages are in place without the responsibility of examining individual policies. **Certificate Holder must be The City of Tampa, Florida.**

CLAIMS MADE – **If** any liability insurance is issued on a claims made form, Firm agrees to maintain such coverage uninterrupted for at least 3 years following completion and acceptance of the work either through purchase of an extended reporting provision or purchase of successive renewals. The Retroactive Date must be shown and be a date not later than the earlier of the Agreement date or the date performance/occupancy began thereunder.

DEDUCTIBLES/ SELF-INSURED RETENTIONS (SIR) – must be disclosed to City and, if over $500,000, approved by the City in advance and in writing, including at City's option being guaranteed, reduced, or eliminated (additionally if a SIR provides a financial guarantee guaranteeing payment of losses and related investigations, claim administration, and defense expenses). Firm shall be fully responsible for any deductible or SIR (without limiting the foregoing a policy with a SIR shall provide or be endorsed to provide that the SIR may be satisfied by either the City or named insured). In the event of loss which would have been covered but for a deductible or SIR, City may withhold from any payment due Firm, under any agreement with the City, an amount equal to same to cover such loss should full recovery not be obtained under the policy.

PERFORMANCE- All insurance policies shall be fully performable in Hillsborough County, Florida (the County), and construed in accordance with Florida law. Further, all insurance policies must expressly state that the insurance company will accept service of process in the County and that the exclusive venue for any action concerning any matter under those policies shall be in the appropriate state court of the County.

PRIMARY POLICIES - Firm's insurance coverage shall be primary insurance coverage at least as broad as ISO CG 20 01 04 13 as to the City, its elected officials, departments, officers, employees, and volunteers. Any insurance or self-insurance maintained by the City, its elected officials, departments, officers, employees, and volunteers shall be excess of the Firm's insurance and shall not contribute with it.

SUBCONTRACTORS/INDEPENDENT ASSOCIATES/CONSULTANTS/SUBTENANTS/SUBLICENSEE - **Firm shall require and verify that all such entities maintain insurance meeting all requirements stated herein with the City as an additional insured** by endorsement (ISO FORM CG 20 38, or broader) or otherwise include such entities within Firm's insurance policies. Upon City's request, Firm shall furnish complete and certified copies of copies of such entities' insurance policies, forms, and endorsements.

SUBCONTRACTOR DEFAULT INSURANCE CONTROLLED INSURANCE PROGRAM, WRAP-UP. Use requires express prior written consent of City Risk Manager.

UNAVAILABILTIY- To the fullest extent permitted by law, if Firm is out of business or otherwise unavailable at the time a claim is presented to City, Firm hereby assigns to the City all of its right, title and interest (but not any liabilities or obligations) under any applicable policies of insurance.

WAIVER OF SUBROGATION – With regard to any policy of insurance that would pay third party losses, Firm hereby grants City a waiver of any right to subrogation which any insurer of Firm may acquire against the City by virtue of the payment of any loss under such insurance. Firm agrees to obtain any endorsement that may be necessary to affect such waiver, but this provision shall apply to such policies regardless.

WAIVER/RELEASE AGREEMENT – Where Firm has a defined group of persons who might be exposed to harm (e.g. participants in an athletic event/program, volunteers) any waiver or release agreement used by Firm whereby such persons (and their parent/guardian as applicable) discharge Firm from claims and liabilities, shall include the City, its elected officials, departments, officers, officials, employees, and volunteers to the same extent as Firm.

Document updated and approved by Legal and Risk Management as of 08/16/2016

Procurement Guidelines
To Implement
Minority & Small Business Participation

Underutilized WMBE Primes by Industry Category

FORMAL PROCUREMENT

Construction	Construction-Related	Professional	Non-Professional	Goods
Black	Asian	Black	Black	Black
Hispanic	Native Am.	Hispanic	Asian	Hispanic
Native Am.	Woman	Asian	Native Am.	Asian
Woman		Native Am.		Native Am.
		Woman		Woman

Underutilized WMBE Sub-Contractors / Sub-Consultants

SUB WORK

Construction	Construction-Related	Professional	Non-Professional	Goods
Black	Black	Black	Black	Black
	Asian	Hispanic	Asian	Asian
	Native Am.	Asian	Native Am.	Native Am.
	Woman	Native Am.		Woman
		Woman		

Policy

The Guidelines apply to formal procurements and solicitations. WMBE participation will be narrowly-tailored.

Index

- Black = Black/African-American Business Enterprise
- Hispanic = Hispanic Business Enterprise
- Asian = Asian Business Enterprise
- Native Am. = Native American Business Enterprise
- Woman = Woman Business Enterprise (Caucasian)

Industry Categories

Construction is defined as: new construction, renovation, restoration, maintenance of public improvements and underground utilities.
Construction-Related Services are defined as: architecture, professional engineering, landscape architecture, design build, construction management services, or registered surveying and mapping.
Professional Services are defined as: attorney, accountant, medical doctor, veterinarian, miscellaneous consultant, etc.
Non-Professional Services are defined as: lawn maintenance, painting, janitorial, printing, hauling, security guard, etc.
Goods are defined as: all supplies, materials, pipes, equipment, machinery, appliances, and other commodities.

MBD Form-70

City-wide Stormwater Box Culvert Rehabilitation
FY 19 Project #19-C-00049
U-WMBE Availability Contact List
(The Underutilized WMBE Industry Category for Construction Subcontracts is BBE)

#'s	Business Name	Phone	Fax	Email	Address 1	City	Stat	Zip	Business Description	FEIN	t. Typ	Ethnicity
2	ECO 2000 INC	352-793-5060	352-793-9074	WATERWORKS@ECO2000INC.COM	1611 W C-48	BUSHNELL	FL	33513	Clearing	593648996	BBE	African American
2	MBattle Construction llc	727-214-4301	727-517-3774	moebattle@hotmail.com	470 maple way	safety harbo	FL	34695	Clearing	760840117	BBE	African American
2	McKenzie Contracting LLC	813-454-4429	813-454-4429	kathy@mckenziecontractingllc.com	7712 E. Broadway Ave.	Tampa	FL	33619	Clearing	463561860	BBE	African American
3	ECO 2000 INC	352-793-5060	352-793-9074	WATERWORKS@ECO2000INC.COM	1611 W C-48	BUSHNELL	FL	33513	Sitework	593648996	BBE	African American
3	MBattle Construction llc	727-214-4301	727-517-3774	moebattle@hotmail.com	470 maple way	safety harbo	FL	34695	Sitework	760840117	BBE	African American
3	McKenzie Contracting LLC	813-454-4429	813-454-4429	kathy@mckenziecontractingllc.com	7712 E. Broadway Ave.	Tampa	FL	33619	Sitework	463561860	BBE	African American
4	ECO 2000 INC	352-793-5060	352-793-9074	WATERWORKS@ECO2000INC.COM	1611 W C-48	BUSHNELL	FL	33513	Stormwater	593648996	BBE	African American
4	McKenzie Contracting LLC	813-454-4429	813-454-4429	kathy@mckenziecontractingllc.com	7712 E. Broadway Ave.	Tampa	FL	33619	Stormwater	463561860	BBE	African American
6	Denson Construction Inc.	863-709-1001	863-709-1071	pete@denson-construction.com	4270 HOLDEN ROAD	LAKELAND	FL	33811	Concrete	593571944	BBE	African American
6	Excel 4 LLc	813-433-3486	813-433-3486	excel4llc@yahoo.com	318 N. John Young Parkway Suite #6	Kissimmee	FL	34741	Concrete	454149326	BBE	African American
6	Exclusive Contractors, Inc.	863-559-1039	000-000-0000	roadcontractor2@YAHOO.com	277 S. 10th Ave	Bartow	FL	33830	Concrete	592345574	BBE	African American
8	BAY LIGHT, LLC	813-972-4057	813-971-0882	baylightllc25@gmail.com	1717 E Busch Blvd	Tampa	FL	33612	Tree Services	455079825	BBE	African American
8	Cutups Lawn Service	813-361-8871	813-238-2397	cutupslawnservice@yahoo.com	3217 East Powhatan Ave.	Tampa	FL	33610	Tree Services	611241291	BBE	African American
8	T.C.C Enterprise Inc	813-606-9148	813-237-0396	tcc_inc@live.com	3902 E POWHATAN AVE	TAMPA	FL	33610	Tree Services	463223645	BBE	African American
9	Obi Global, LLC	813-400-8562		obigloballlc@gmail.com	11507 Dr. MLK Blvd	Mango	FL	33550	Court Resurfacing	471881723	BBE	African American
9	Pro Construct Services LLC	813-445-4840	813-749-9383	roberta.warren@pro-constructllc.com	6601 Memorial Hwy	TAMPA, FL	FL	33615	Court Resurfacing	464782775	BBE	African American
11	Fresh Start Development, Inc.	813-758-5345	813-333-5949	freshstartdevelop@yahoo.com	601 S Falkenburg Rd	Tampa	FL	33619	Fencing	203857845	BBE	African American
12	AAJ Lawn Care Services, Inc.	813-220-8533	888-277-1860	aajlawncare@gmail.com	3716 E. Idlewild Avenue	Tampa	FL	33610	Sod	260254393	BBE	African American
12	BUN Construction Co., Inc.	813-931-8270	813-931-9185	bunconstruction@tampabay.rr.com	4135 E. Hillsborough Avenue	Tampa	FL	33610	Sod	593362663	BBE	African American
12	Cutups Lawn Service	813-361-8871	813-238-2397	cutupslawnservice@yahoo.com	3217 East Powhatan Ave.	Tampa	FL	33610	Sod	611241291	BBE	African American
12	Dean's Enviornmental Services, Inc.	863-595-8255	904-791-9060	deank8859@gmail.com	2644 Whispering Trails Dr	Winter Have	FL	33884	Sod	830461047	BBE	African American
12	Fresh Start Development, Inc.	813-758-5345	813-333-5949	freshstartdevelop@yahoo.com	601 S Falkenburg Rd	Tampa	FL	33619	Sod	203857845	BBE	African American
12	Moses & Wourman Maintenance Inc.	813-244-7134	813-920-1430	ctmoses11@msn.com	13014 N Dale Mabry Ste 136	Tampa	FL	33618	Sod	650105210	BBE	African American
12	Promise Construction and Repair Solutions LLC	813-988-8633	813-988-1555	promisecarellc@outlook.com	10711 North 53rd Street	TAMPA	FL	33617	Sod	464723775	BBE	African American
12	T.C.C Enterprise Inc	813-606-9148	813-237-0396	tcc_inc@live.com	3902 E POWHATAN AVE	TAMPA	FL	33610	Sod	463223645	BBE	African American
12	WC Boxes, Inc.	813-478-1102	813-864-4386	wcindustries2003@gmail.com	17620 Lake Key Drive	Odessa	FL	33556	Sod	472682190	BBE	African American
14	AAJ Lawn Care Services, Inc.	813-220-8533	888-277-1860	aajlawncare@gmail.com	3716 E. Idlewild Avenue	Tampa	FL	33610	Landscaping	260254393	BBE	African American
14	BAY LIGHT, LLC	813-972-4057	813-971-0882	baylightllc25@gmail.com	1717 E Busch Blvd	Tampa	FL	33612	Landscaping	455079825	BBE	African American
14	BUN Construction Co., Inc.	813-931-8270	813-931-9185	bunconstruction@tampabay.rr.com	4135 E. Hillsborough Avenue	Tampa	FL	33610	Landscaping	593362663	BBE	African American
14	Cutups Lawn Service	813-361-8871	813-238-2397	cutupslawnservice@yahoo.com	3217 East Powhatan Ave.	Tampa	FL	33610	Landscaping	611241291	BBE	African American
14	Dean's Enviornmental Services, Inc.	863-595-8255	904-791-9060	deank8859@gmail.com	2644 Whispering Trails Dr	Winter Have	FL	33884	Landscaping	830461047	BBE	African American
14	Moses & Wourman Maintenance Inc.	813-244-7134	813-920-1430	ctmoses11@msn.com	13014 N Dale Mabry Ste 136	Tampa	FL	33618	Landscaping	650105210	BBE	African American
14	Promise Construction and Repair Solutions LLC	813-988-8633	813-988-1555	promisecarellc@outlook.com	10711 North 53rd Street	TAMPA	FL	33617	Landscaping	464723775	BBE	African American
14	T.C.C Enterprise Inc	813-606-9148	813-237-0396	tcc_inc@live.com	3902 E POWHATAN AVE	TAMPA	FL	33610	Landscaping	463223645	BBE	African American
14	WC Boxes, Inc.	813-478-1102	813-864-4386	wcindustries2003@gmail.com	17620 Lake Key Drive	Odessa	FL	33556	Landscaping	472682190	BBE	African American
14	Yahweh Lawn Care & Landscaping Inc.	727-303-5609		Yahwehlawn@gmail.com	2621 Emerson ave S.	St. Petersbur	FL	33712	Landscaping	472424364	BBE	African American
15	Excel 4 LLc	813-433-3486	813-433-3486	excel4llc@yahoo.com	318 N. John Young Parkway Suite #6	Kissimmee	FL	34741	Demolition Services;	454149326	BBE	African American
15	Exclusive Contractors, Inc.	863-559-1039	000-000-0000	roadcontractor2@YAHOO.com	277 S. 10th Ave	Bartow	FL	33830	Demolition Services;	592345574	BBE	African American

African American/Black Business Enterprises (BBE) shall count toward the subcontract goal. Refer to MBD Form 70 - Procurement Guidelines

City-wide Stormwater Box Culvert Rehabilitation
FY 19 Project #19-C-00049
SLBE Availability Contact List

#'s	Business Name	Phone	Fax	Email	Address 1	City	ate	Zip	Business Description	FEIN	Cert. Type	Ethnicity
1	2 Meyer Corp.	813-210-4864	813-645-5634	Renatonjr@aol.com	6308 Lake Sunrise Dr.	Apollo Beach	FL	33572	Pipe Supply	562384669	SLBE	Caucasian
1	Alfonso Communications, Inc.	813-957-3208	813-957-3208	darren@alfonsocommunications.com	3959 Van Dyke Road	Lutz	FL	33558	Pipe Supply	474659688	SLBE	Hispanic American
1	DRD Enterprises LLC	813-476-9933	866-850-1332	ddeenah@drdenterprise.com	4104 Yellowwood Dr.,	Valrico	FL	33594	Pipe Supply	204675317	SLBE	African American
1	Mar Supply Co.	941-286-3240	941-761-6500	info@marsupplyco.com	1660 63rd Avenue East	Bradenton	FL	34203	Pipe Supply	270206845	SLBE	Hispanic American
1	MBE Supply of Florida, Inc.	813-781-6583		mbesupplyofflorida@gmail.com	4306 W. Osborne Avenue	Tampa	FL	33613	Pipe Supply	463284565	SLBE	Caucasian
1	Suca Pipe Supply, Inc.	813-249-7902		slmau44@yahoo.com	4910 Lowell Rd	Tampa	FL	33624	Pipe Supply	592499571	SLBE	African American
1	Suca Pipe Supply, Inc. One	813-249-7902		mactwinau1@yahoo.com	4910 Lowell Road	Tampa	FL	33624	Pipe Supply	263669556	SLBE	African American
2	2 Meyer Corp.	813-210-4864	813-645-5634	Renatonjr@aol.com	6308 Lake Sunrise Dr.	Apollo Beach	FL	33572	Erosion control	562384669	SLBE	Caucasian
2	CMS Crawford Maintenance Services LLC.	727-216-6469	727-216-6524	marina@crawfordmain.com	14028 Palm Way	Largo	FL	33771	Erosion control	262249991	SLBE	Hispanic American
2	MASONRY & CONSTRUCTION SERVICES, INC	813-981-0196		masonrylg@hotmail.com	13452 N. Florida Ave	Tampa	FL	33613	Erosion control	262240950	SLBE	Hispanic American
3	SAFETY ZONE SPECIALIST INC	863-984-1385	863-984-0058	DAVID@SAFETYZONESPECIALISTS.COM	8341 Epicenter Blvd	LAKELAND	FL	33809	Maintenance of Traffic	593122879	SLBE	Caucasian
4	A Business Forms & Pegboard Systems, Inc.	813-933-2788		social@amediamarketing.com	3104 North Armenia Avenu	Tampa	FL	33607	Video Inspection	591559977	SLBE	Caucasian
4	Florida Contractors Video Service,Inc	813-737-1774	813-737-6151	FCVSinc@aol.com	4412 Hollway Meadow Lan	Plant City	FL	33567	Video Inspection	650373535	SLBE	Caucasian
4	Frederick Communications & Consulting LLC	813-758-9149	813-281-2006	Frederick.Communications@gmail.com	3853 Northdale Blvd #112	Tampa	FL	33624	Video Inspection	800240902	SLBE	Hispanic American
4	Kerrick Williams Photography, LLC	813-571-3768	866-571-7149	kerrick@kerrickwilliams.com	811 Hickory Glen Drive	Seffner	FL	33584	Video Inspection	593225186	SLBE	African American
4	Renker Eich Parks Architects Inc.	727-821-2986	727-896-4911	rheadland@reparch.com	1609 Dr MLK Jr Street Nort	St. Petersburg	FL	33704	Video Inspection	592755330	SLBE	Caucasian
4	Ubora Films LLC	813-220-2051		uborafilms@gmail.com	24940 Hyde Park Boulevar	LAND O LAKES	FL	34639	Video Inspection	821230551	SLBE	African American
4	Uppercase, Inc.	813-226-3096		matt@uppercaseincorporated.com	905 North Tampa Street	Tampa	FL	33602	Video Inspection	262817255	SLBE	Caucasian
5	J.T.V., Incorporated	727-528-1998	727-528-9773	jtvincorporated@aol.com	6400 53RD STREET NORTH	PINELLAS PARK	FL	33781	water System Hydraulic Cl	593076314	SLBE	Caucasian
6	J.T.V., Incorporated	727-528-1998	727-528-9773	jtvincorporated@aol.com	6400 53RD STREET NORTH	PINELLAS PARK	FL	33781	Stormwater Cleaning	593076314	SLBE	Caucasian
7	BUN Construction Co., Inc.	813-931-8270	813-931-9185	bunconstruction@tampabay.rr.com	4135 E. Hillsborough Avenu	Tampa	FL	33610	Pavement Replacement	593362663	SLBE	African American
7	MASONRY & CONSTRUCTION SERVICES, INC	813-981-0196		masonrylg@hotmail.com	13452 N. Florida Ave	Tampa	FL	33613	Pavement Replacement	262240950	SLBE	Hispanic American
7	Parking Lot Striping Service Inc.	813-623-1454	813-664-0140	fernandoplss@aol.com	3901 E LAKE AVE	TAMPA	FL	33610	Pavement Replacement	260324264	SLBE	Hispanic American
7	YD West Coast Home, Inc.	813-879-0077	813-879-5724	mgonzalez@ydwestcoasthome.com	20026 Date Palm Way	Tampa	FL	33647	Pavement Replacement	452357137	SLBE	Hispanic American
8	CARJA CONSTRUCTION, INC	813-304-7158		Carly@puleosconcrete.com	18803 cherrybirch cir	lutz	FL	33558	Concrete Flat Work	463665283	SLBE	Caucasian
8	Exclusive Contractors, Inc.	863-559-1039	000-000-0000	roadcontractor2@YAHOO.com	277 S. 10th Ave	Bartow	FL	33830	Concrete Flat Work	592345574	SLBE	African American
8	Parking Lot Striping Service Inc.	813-623-1454	813-664-0140	fernandoplss@aol.com	3901 E LAKE AVE	TAMPA	FL	33610	Concrete Flat Work	260324264	SLBE	Hispanic American
8	Quick Construction Solutions, LLC	813-377-9997	813-374-5849	quickcs@outlook.com	4501 N. Saint Vincent St.	Tampa	FL	33614	Concrete Flat Work	900972890	SLBE	Hispanic American
9	2 Meyer Corp.	813-210-4864	813-645-5634	Renatonjr@aol.com	6308 Lake Sunrise Dr.	Apollo Beach	FL	33572	Sodding	562384669	SLBE	Caucasian
9	AGRO-TURF CORP.	813-267-8156	813-741-9253	beatriz@agroturf.org	11810 Bullfrog Creek Rd., (	Gibsonton	FL	33534	Sodding	205501762	SLBE	Hispanic American
9	Baron's Landscaping Services, Inc.	813-404-1509	813-476-6255	baronslawncare@aol.com	P.O. Box 4047	Tampa	FL	33677	Sodding	650837654	SLBE	Hispanic American
9	BUN Construction Co., Inc.	813-931-8270	813-931-9185	bunconstruction@tampabay.rr.com	4135 E. Hillsborough Avenu	Tampa	FL	33610	Sodding	593362663	SLBE	African American

City-wide Stormwater Box Culvert Rehabilitation
FY 19 Project #19-C-00049
SLBE Availability Contact List

#'s	Business Name	Phone	Fax	Email	Address 1	City	ate	Zip	Business Description	FEIN	Cert. Type	Ethnicity
9	Cardinal Landscaping Services of Tampa, Inc.	813-915-9696	813-915-9695	Mark@cardinallandscape.com	817 E. Okaloosa Ave.	Tampa	FL	33604	Sodding	593394554	SLBE	Caucasian
9	CMS Crawford Maintenance Services LLC.	727-216-6469	727-216-6524	marina@crawfordmain.com	14028 Palm Way	Largo	FL	33771	Sodding	262249991	SLBE	Hispanic American
9	Cutups Lawn Service	813-361-8871	813-238-2397	cutupslawnservice@yahoo.com	3217 East Powhatan Ave.	Tampa	FL	33610	Sodding	611412916	SLBE	African American
9	D & J LAWN SERVICES OF LAKELAND LLC	863-859-3525	863-853-1044	DANDJLAWNSERVICES@HOTMAIL.COM	575 OLD POLK CITY ROAD	LAKELAND	FL	33809	Sodding	273279070	SLBE	Hispanic American
9	Dean's Enviornmental Services, Inc.	863-595-8255	904-791-9060	deank8859@gmail.com	2644 Whispering Trails Dr	Winter Haven	FL	33884	Sodding	830461047	SLBE	African American
9	Evolve Professional Landscape Management, LL	863-537-7537	863-223-0275	jillian.evolve@gmail.com	897 E. Lemon Street	Bartow	FL	33830	Sodding	272323571	SLBE	Caucasian
9	Florida Natives Nursery, Inc.	813-754-1900	813-754-4001	office@floridanativesnursery.com	4115 NATIVE GARDEN DR	PLANT CITY	FL	33565	Sodding	593561539	SLBE	Caucasian
9	Fresh Start Development, Inc.	813-758-5345	813-333-5949	freshstartdevelop@yahoo.com	601 S Falkenburg Rd	Tampa	FL	33619	Sodding	203857845	SLBE	African American
9	Gardensmith	813-352-3008		gardensmith@me.com	4113 Henderson Blvd	tampa	FL	33629	Sodding	273649269	SLBE	Caucasian
9	Grass & Landscaping Hunters LLC	813-770-6795		grasslandscapinghunters@hotmail.com	914 Burlwood St	Brandon	FL	33511	Sodding	821161283	SLBE	African American
9	GREEN EXPECTATIONS LANDSCAPING LLC	813-782-6263	813-315-6461	INFO@GXLFL.COM	37609 Eiland Blvd.	Zephyrhills	FL	33542	Sodding	262054130	SLBE	Hispanic American
9	Green Seeds Inc	813-858-7765		dbrion@ourgreenseed.com	3387 Antigua lane, UNIT 30	tampa	FL	33614	Sodding	811867821	SLBE	Hispanic American
9	Johnson's Excavation & Services, Inc.	813-752-7097	813-719-9052	sales@jescontracting.com	1706 East Trapnell Road	Plant City	FL	33566	Sodding	593031174	SLBE	Caucasian
9	JTCM Inc	813-935-7724		office@lawnsculptures.net	817 S MacDill Ave	Tampa	FL	33609	Sodding	562418914	SLBE	Caucasian
9	MASONRY & CONSTRUCTION SERVICES, INC	813-981-0196		masonrylg@hotmail.com	13452 N. Florida Ave	Tampa	FL	33613	Sodding	262240950	SLBE	Hispanic American
9	Morelli Landscaping, Inc	727-535-6263	727-536-6855	vjmorelli@tampabay.rr.com	6370 146th Avenue North	Clearwater	FL	33760	Sodding	591877993	SLBE	Caucasian
9	Moses & Wourman Maintenance Inc.	813-244-7134	813-920-1430	ctmoses11@msn.com	13014 N Dale Mabry Ste 13	Tampa	FL	33618	Sodding	650105210	SLBE	African American
9	Promise Construction and Repair Solutions LLC	813-988-8633	813-988-1555	promisecarellc@outlook.com	10711 North 53rd Street	TAMPA	FL	33617	Sodding	464723775	SLBE	African American
9	Rooms by Rooms Design	813-479-5353		roomsbyroomsdesign@hotmail.com	3101 21st ct east	palmetto	FL	34221	Sodding	831536268	SLBE	Hispanic American
9	Sunbelt Sod & Grading Company	813-641-9855	813-645-7263	sunbeltsod@verizon.net	819 - 9th St. N.E.	Ruskin	FL	33570	Sodding	134250933	SLBE	Caucasian
9	T.C.C Enterprise Inc	813-606-9148	813-237-0396	tcc_inc@live.com	3902 E POWHATAN AVE	TAMPA	FL	33610	Sodding	463223645	SLBE	African American
9	WC Boxes, Inc.	813-478-1102	813-864-4386	wcindustries2003@gmail.com	17620 Lake Key Drive	Odessa	FL	33556	Sodding	472682190	SLBE	African American
9	Williams Landscape Management Co., Inc.	813-628-8048	813-628-8041	tonywilliams@wlmslandscape.com	5710 N 50th St	Tampa	FL	33610	Sodding	593516370	SLBE	African American
#	Cordova Transport Inc	813-284-6953	813-284-6952	cordovatransport@aol.com	7006 E. 9th Ave.	Tampa	FL	33619	Hauling	272503834	SLBE	Hispanic American
#	E Johnson Hauling and Construction LLC	813-417-9116		johnsonhauling78@gmail.com	709 E.Lake Ave.	Tampa	FL	33603	Hauling	813301557	SLBE	African American
#	Jansay Trucking, LLC	813-300-1846	813-885-4214	jansayTrucking@gmail.com	2021 N 61st Street	Tampa	FL	33619	Hauling	472179144	SLBE	Hispanic American
#	Odessa Trucking Inc	813-918-1715	813-920-8673	odessatrucking@msn.com	18136 GUNN HWY	ODESSA	FL	33556	Hauling	593334628	SLBE	Hispanic American
#	Ortzak Construction Group, LLC	813-961-6023	813-961-6023	dcastro@ortzak.com	13014 N. Dale Mabry Hwy,	Tampa	FL	33618	Hauling	454837502	SLBE	Hispanic American
#	PAR Development Partners, Inc.	813-374-2856	866-594-2505	ydwilson@aol.com	2109 E Palm Ave	Tampa	FL	33612	Hauling	205657414	SLBE	African American
#	Provision Trucking Company Inc	813-898-3632	813-898-3632	provisiontrucking@yahoo.com	20405 Berrywood Lane	Tampa	FL	33647	Hauling	900922228	SLBE	African American
#	Renew Construction Services	813-990-7700	813-315-6279	jrd.renew@gmail.com	5508 N 50th St N	Tampa	FL	33610	Hauling	471907700	SLBE	African American
#	Sabrina's Trucking, LLC	813-629-7210	813-986-1124	jtrucker151@aol.com	6707 trixie dr	seffner	FL	33584	Hauling	204083765	SLBE	African American
#	Suarez Grading Enterprises, Inc.	813-663-9037	813-620-4158	l.suarez@suarezgrading.com	3215 36th Ave SE	Ruskin	FL	33570	Hauling	841681751	SLBE	Hispanic American
#	TULIPAN TRUCKING LLC	786-768-0925		tulipantrucking@gmail.com	4051 Benson Avenue North	St. Peterburg	FL	33713	Hauling	461844694	SLBE	Hispanic American

Instructions Regarding Use of the WMBE/SLBE Availability Contact List

Bidders must solicit a subcontracting bid from ALL of the firms listed on the WMBE/SLBEs list provided within the Specifications, and provide documentation of emails, faxes, phone calls, letters, or other communication with the firms as a first step in demonstrating Good-Faith Efforts to achieve the goal set for WMBE/SLBE participation on this contract.

The list is formatted to facilitate e-mailing of a solicitation to the listed firms by copying and pasting the email addresses.

The WMBE/SLBE participation Goal is based upon the availability of the certified firms indicated on the contact list. The Goal and Requirements of the City's Equal Business Opportunity Program are stated in the Bid/Contract Document, Specifications.

PROPOSAL

To the Mayor and City Council of the City of Tampa, Florida:

Legal Name of Bidder: _____

Bidder's Fictitious Name*, if applicable*: _____

Bidder is a/an: ☐ Individual ☐ Partnership* ☐ Joint Venture* ☐ LLC ☐ Corp. ☐ Other:

Bidder is organized under the laws of: ☐ State of Florida ☐ Other:

Bidder Mailing Address: _____

Bidder's Federal Employee Identification No. (FEI/EIN): _____

Bidder's License No.:_____ Bidder's FDOS (SUNBIZ) Doc. No.: _____

(See Ch. 489. FS; use entity's, individual's only if applicable)

Bidder Contact Name**: _____ Email:_____ Phone: (____) _____

Bidder's own initial application for employment has criminal history screening practices similar in nature to the practices contained in Chapter 12, Article VI, City of Tampa Code *(Responses, whether "Yes" or "No", are for informational purposes only and will not be used as a basis of award or denial, nor as a basis for any protest)*: ☐Yes ☐No

The below named person, appearing before the undersigned authority and after being first duly sworn, for him/herself and on behalf of the entity submitting this Proposal does hereby affirm and declare as follows:

(1) He/She is of lawful age and is authorized to act on behalf of Bidder (the individual, partnership, corporation, entity, etc. submitting this Proposal) and that all statements made in this document are true and correct to the best of my knowledge.

(2) If Bidder is operating under a fictitious name, Bidder has currently complied with any and all laws and procedures governing the operation of businesses under fictitious names in the State of Florida

(3) No person or entity other than Bidder has any interest in this Proposal or in the Contract proposed to be entered into.

(4) This Proposal is made without any understanding, agreement, or connection with any person or entity making Proposal for the same purposes, and is in all respects fair and without collusion or fraud.

(5) Bidder is not in arrears to the City of Tampa, upon debt or contract, and is not a defaulter, as surety or otherwise, upon any obligation to the City of Tampa.

(6) That no officer or employee or person whose salary is payable in whole or in part from the City Treasury is, shall be or become interested, directly or indirectly, as a contracting party, partner, stockholder, surety or otherwise, in this Proposal, or in the performance of the Contract, or in the supplies, materials, or equipment and work or labor to which it relates, or in any portion of the profits thereof.

(7) Bidder has carefully examined and fully understands the Solicitation and has full knowledge of the scope, nature, and quality of the work to be performed; furthermore, Bidder has carefully examined the site of the work and that, from his own investigations, he has satisfied himself as to the nature and location of the work, the character, quality, and quantity of materials and the kinds and extent of equipment and other facilities needed for the performance of the work, the general and local conditions and all difficulties to be encountered, and all other items which may, in any way, affect the work or its performance.

(8) Bidder (including its principals) ☐ has | ☐ has NOT been debarred or suspended from contracting with a public entity.

(9) Bidder ☐ has | ☐ has NOT implemented a drug-free workplace program that meets the requirements of Section 287.087, Florida Statutes.

(10) Bidder has carefully examined and fully understands all the component parts of the Contract Documents and agrees Bidder will execute the Contract, provide the required Public Construction Bond, and will fully perform the work in strict accordance with the terms of the Contract and Contract Documents therein referred to for the following prices, to wit:

* If a Partnership or Joint Venture, attach Partnership or Joint Venture Agreement.
** Someone the City may contact with questions/correspondence regarding this Solicitation and/or permits.

Item No.	Description	Unit	Est Qty	Unit Price in Words		Unit Price		Total Price
0100-01	Contingency	LS	1		$	50,000.00	$	50,000.00
0101-01	Mobilization	LS	1		$	50,000.00	$	50,000.00
0101-02	Emergency Mobilization - Added to 10% Mobilization	LS	1		$		$	
0102-01	Work Zone Signs	ED	100		$		$	
0102-02	Barricades Type I or II	ED	49		$		$	
0102-03	Cones	ED	300		$		$	
0102-04	Light Towers	ED	10		$		$	
0102-05	Flagman	ED	10		$		$	
0102-06	Arrow Board	ED	100		$		$	
0102-07	Variable Message Board	ED	5		$		$	
0103-01	Silt Fence	LF	100		$		$	
0104-01	Floating Silt Barrier	LF	50		$		$	
0142-01	Import Clean Fill material	CY	100		$		$	
0142-02	Removal of Unsuitable Material	CY	100		$		$	

Item No.	Description	Unit	Est Qty	Unit Price in Words		Unit Price		Total Price
0170-01	Hydraulic Cleaning of Box Culvert	LF	2000		$		$	
0170-02	Mechanical Cleaning of Box Culvert	LF	2000		$		$	
0170-03A	Disposal of Debris CITY	CY	20		$		$	
0170-03B	Disposal of Debris PERMITTING FACILITY	CY	60		$		$	
0172-01	Video and Photographic Inspection of Box Culvert	LF	4000		$		$	
0285-01	8" Concrete Base Replacement	SY	300		$		$	
0334-01	Permanent Pavement Surface Replacement	TN	50		$		$	
0350-01	Concrete Driveway/Sidewalk Replacement	SY	80		$		$	
0425-010	City of Tampa Type 1 Inlet - 4 feet to 5 feet deep	EA	10		$		$	
0425-015	City of Tampa Type 1 Inlet - 5 feet to 8 feet deep	EA	10		$		$	
0425-020	City of Tampa Manhole Access 12" to 24"	EA	10		$		$	
0425-025	City of Tampa Manhole Access 24" to 36"	EA	10		$		$	
0430-01	15" RCP Storm Pipe Class III	LF	50		$		$	
0430-02	18" RCP Storm Pipe Class III	LF	50		$		$	
0430-03	24" RCP Storm Pipe Class III	LF	50		$		$	

Item No.	Description	Unit	Est Qty	Unit Price in Words		Unit Price		Total Price
0430-04	14" x 23" ERCP Storm Pipe Class III	LF	50		$		$	
0430-05	19" x 30" ERCP Storm Pipe Class III	LF	50		$		$	
0570-01	Sod	SY	400		$		$	
0960-A	Crack Injection Repair	LF	800		$		$	
0960-B	Sealing Cracks and Concrete Surfaces	SF	1000		$		$	
0960-C	Minor Spall Repair	SY	500		$		$	
0960-D	Major Spall Repair	SY	500		$		$	
0960-E	Culvert Root Intrusion Repair	EA	10		$		$	
0960-F	Top Slab Inlet Access Repair	EA	20		$		$	
0960-G	Artesian Well Repair	EA	2		$		$	
0960-H	Restore Spalled Areas with Gunite	SY	230		$		$	
0960-I	Void Filling Repair	LBS	100		$		$	
0960-J	Joint Sealing Repair	LBS	105		$		$	
TOTAL CONSTRUCTION COST					$		$	100,000.00

Computed Total Price in Words: _____

_____dollars and _____ cents.

Computed Total Price in Figures: $_____

Bidder acknowledges that the following addenda have been received and that the changes covered by the addendum(s) have been taken into account in this proposal: #1 ____ #2 ____ #3 ____ #4 ____ #5 ____ #6 ____ #7 ____ #8 ____.

Bidder acknowledges the requirements of the City of Tampa's Equal Business Opportunity Program.

Bidder acknowledges that it is aware of Florida's Trench Safety Act (Sections 553.60-553.64, Florida Statutes), and agrees that Bidder together with any involved subcontractors will comply with all applicable trench safety standards. Bidder further acknowledges that included in the various items of this Proposal and the total bid price (as applicable) are costs for complying with the Trench Safety Act. Bidder further identifies the costs and methods summarized below:

	Trench Safety Measure (Description)	Unit of Measure (LF, SY)	Unit Quantity	Unit Cost	Extended Cost
A.					
B.					
C.					

Total Cost: $ _____

Accompanying this Proposal is a certified check, cashier's check or Tampa Bid Bond (form included herein must be used) for at least five percent (5%) of the total amount of the Proposal which check shall become the property of the City, or which bond shall become forthwith due and payable to the City, if this Proposal shall be accepted by the City and the Bidder shall fail to enter into a legally binding contract with and to furnish the required Public Construction Bond to the City within twenty (20) days after the date of its receipt of written Notice of Award by the City so to do.

FAILURE TO COMPLETE THE ABOVE MAY RESULT IN THE PROPOSAL BEING DECLARED NON-RESPONSIVE.

[SEAL]

Name of Bidder:_____

Authorized Signature:_____

Signer's Printed Name:_____

Signer's Title: _____

STATE OF _____

COUNTY OF _____

For an entity: The forgoing instrument was sworn (or affirmed) before me this ____ day of _____, 20____ by _____ as _____ of _____, a/n □ Partnership □ Joint Venture □ LLC □ Corp □ Other:_____, on behalf of such entity. Such individual is □ personally known to me or □ produced a/n _____ state driver's license as identification.

For an individual: The forgoing instrument was sworn (or affirmed) before me this ____ day of _____, 20____ by _____, who is □ personally known to me or □ produced a/n _____ state driver's license as identification.

[NOTARY SEAL]

_____

Notary Public, State of _____

Notary Printed Name: _____

Commission No.: _____

My Commission Expires: _____

Good Faith Effort Compliance Plan Guidelines

for Women/Minority Business Enterprise\Small Local Business Enterprise Participation
City of Tampa - Equal Business Opportunity Program
(MBD Form 50 – detailed instructions on page 2 of 2)

Contract Name_____ Bid Date _____

Bidder/Proposer_____

Signature _____ Date _____

Name _____ Title _____

The Compliance Plan with attachments is a true account of Good Faith Efforts (GFE) made to achieve the participation goals as specified for Women/Minority Business Enterprises/Small Local Business Enterprises (WMBE/SLBE) on the referenced contract:

□ The WMBE/SLBE participation Goal is Met or Exceeded. See DMI Forms 10 and 20 which accurately report all subcontractors solicited and all subcontractors to-be-utilized.

□ The WMBE/SLBE participation Goal is Not Achieved. The following list is an overview of the baseline GFE action steps already performed. Furthermore, it is understood that these GFE requirements are weighted in the compliance evaluation based on the veracity and demonstrable degree of documentation provided with the bid/proposal:

(Check applicable boxes below. Must enclose supporting documents accordingly with remarks)

(1) Solicited through reasonable and available means the interest of WMBE/SLBEs that have the capability to perform the work of the contract. The Bidder or Proposer must solicit this interest within sufficient time to allow the WMBE/SLBEs to respond. The Bidder or Proposer must take appropriate steps to follow up initial solicitations with interested WMBE/SLBEs. □ See DMI report forms for subcontractors solicited. □ See enclosed supplemental data on solicitation efforts. □ Qualifying Remarks:

(2) Provided interested WMBE/SLBEs with adequate, specific scope information about the plans, specifications, and requirements of the contract, including addenda, in a timely manner to assist them in responding to the requested-scope identified by bidder/proposer for the solicitation. □ See enclosed actual solicitations used. □ Qualifying Remarks:

(3) Negotiated in good faith with interested WMBE/SLBEs that have submitted bids (e.g. adjusted quantities or scale). Documentation of negotiation must include the names, addresses, and telephone numbers of WMBE/SLBEs that were solicited; the date of each such solicitation; a description of the information provided regarding the plans and specifications for the work selected for subcontracting; and evidence as to why agreements could not be reached with WMBE/SLBEs to perform the work. Additional costs involved in soliciting and using subcontractors is not a sufficient reason for a bidder/proposer's failure to meet goals or achieve participation, as long as such costs are reasonable. Bidders are not required to accept excessive quotes in order to meet the goal.
□ DMI Utilized Forms for sub-(contractor/consultant) reflect genuine negotiations □ This project is an RFQ/RFP in nature and negotiations are limited to clarifications of scope/specifications and qualifications. □ See enclosed documentation. □ Qualifying Remarks:

(4) Not rejecting WMBE/SLBEs as being unqualified without justification based on a thorough investigation of their capabilities. The WMBE/SLBEs standing within its industry, membership in specific groups, organizations / associations and political or social affiliations are not legitimate causes for rejecting or not soliciting bids to meet the goals.
□ Not applicable. □ See attached justification for rejection of a subcontractor's bid or proposal. □ Qualifying Remarks:

(5) Made scope(s) of work available to WMBE/SLBE subcontractors and suppliers; and, segmented portions of the work or material consistent with the available WMBE/SLBE subcontractors and suppliers, so as to facilitate meeting the goal. □ Sub-Contractors were allowed to bid on their own choice of work or trade without restriction to a pre-determined portion. □ See enclosed comments. □ Qualifying Remarks:

(6) Made good faith efforts, despite the ability or desire of Bidder/Proposer to perform the work of a contract with its own forces/organization. A Bidder/Proposer who desires to self-perform the work of a contract must demonstrate good faith efforts if the goal has not been met. □ Sub-Contractors were not prohibited from submitting bids/proposals and were solicited on work typically self-performed by the prime. □ Qualifying Remarks:

(7) Segmented portions of the work to be performed by WMBE/SLBEs in order to increase the likelihood that the goals will be met. This includes, where appropriate, breaking out contract work items into economically feasible units (quantities/scale) to facilitate WMBE/SLBE participation, even when the Bidder/Proposer might otherwise prefer to perform these work items with its own forces. □ Sub-Contractors were allowed to bid on their own choice of work or trade without restriction to a pre-determined portion. □ Sub-Contractors were not prohibited from submitting bids/proposals and were solicited on work typically self-performed by the prime. □ See enclosed comments. □ Qualifying Remarks:

(8) Made efforts to assist interested WMBE/SLBEs in obtaining bonding, lines of credit, or insurance as required by the city or contractor.
□ See enclosed documentation on initiatives undertaken and methods to accomplish. □ Qualifying Remarks:

(9) Made efforts to assist interested WMBE/SLBEs in obtaining necessary equipment, supplies, materials, or related assistance or services, including participation in an acceptable mentor-protégé program. □ See enclosed documentation of initiatives and/or agreements. □ Qualifying Remarks:

(10) Effectively used the services of the City and other organizations that provide assistance in the recruitment and placement of WMBE/SLBEs.
□ See enclosed documentation. □ The following services were used:

Note: Provide any unsolicited information that will support the Bid/RFP Compliance Evaluation. □ Named Documents Are:

Participation Plan: Guidance for Complying with Good Faith Efforts Outreach

1. All firms on the WMBE/SLBE Goal Setting List must be solicited and documentation provided for email, fax, letters, phone calls, and other methods of outreach/communication with the listed firms. The DMI Solicited and DMI-Utilized forms must be completed for all firms solicited or utilized. Other opportunities for subcontracting may be explored by consulting the City of Tampa MBD Office and/or researching the on-line Diversity Management Business System Directory for Tampa certified WMBE/SLBE firms.

2. Solicitation of WMBE/SLBEs, via written or electronic notification, should provide specific information on the services needed, where plans can be reviewed and assistance offered in obtaining these, if required. Solicitations should be sent a minimum of a week (i.e. 5 business days or more) before the bid/proposal date. Actual copies of the bidder's solicitation containing their scope specific instructions should be provided.

3. With any quotes received, a follow-up should be made when needed to confirm detail scope of work. For any WMBE/SLBE low quotes rejected, an explanation Shall be provided detailing negotiation efforts.

4. If a low bid WMBE/SLBE is rejected or deemed unqualified the contractor must provide an explanation and supporting documentation for this decision.

5. Prime Shall break down portions of work into economical feasible opportunities for subcontracting. The WMBE/SLBE directory may be useful in identifying additional subcontracting opportunities and firms not listed in the "WMBE/SLBE Goal Setting Firms List."

6. Contractor Shall not preclude WMBE/SLBEs from bidding on any part of work, even if the Contractor may desire to self-perform the work.

7. Contractor Shall avoid relying solely on subcontracting out work-scope where WMBE/SLBE availability is not sufficient to attain the pre-determined subcontract goal set for the Bid or when targeted sub-consultant participation is stated within the RFP/RFQ.

8. In its solicitations, the Bidder should offer assistance to WMBE/SLBEs in obtaining bonding, insurance, et cetera, if required of subcontractors by the City or Prime Contractor.

9. In its solicitation, the Bidder should offer assistance in obtaining equipment for a specific job to WMBE/SLBEs, if needed.

10. Contractor should use the services offered by such agencies as the City of Tampa Minority and Small Business Development Office, Hillsborough County Entrepreneur Collaborative Center, Hillsborough County Economic Development Department's MBE/SBE Program and the NAACP Empowerment Center to name a few for the recruitment and placement of WMBEs/SLBEs.

Failure to Complete, Sign and Submit Both Forms 10 & 20 SHALL render the Bid or Proposal Non-Responsive

Page 1 of 4 – DMI Solicited/Utilized Schedules
City of Tampa – Schedule of All Solicited Sub-(Contractors/Consultants/Suppliers)
(FORM MBD-10)

Contract No.:_____ Contract Name:_____
Company Name:_____ Address:_____
Federal ID:_____ Phone:_____ Fax:_____ Email:_____

Check applicable box(es). Detailed Instructions for completing this form are on page 2 of 4.
[ ] No Firms were contacted or solicited for this contract.
[ ] No Firms were contacted because:_____
[ ] See attached list of additional Firms solicited and all supplemental information (List must comply to this form)
Note: Form MBD-10 must list ALL subcontractors solicited including Non-minority/small businesses

NIGP Code Categories: Buildings = 909, General = 912, Heavy = 913, Trades = 914, Architects = 906, Engineers & Surveyors = 925, Supplier = 912-77

S = SLBE W=WMBE O = Neither Federal ID	Company Name Address Phone, Fax, Email	Type of Ownership (F=Female M=Male) BF BM = African Am. HF HM = Hispanic AF AM = Asian Am. NF NM = Native Am. CF CM = Caucasian	Trade or Services NIGP Code (listed above)	Contact Method L=Letter F=Fax E=Email P=Phone	Quote or Response Received Y/N

Failure to Complete, Sign and Submit this form with your Bid or Proposal Shall render the Bid Non-Responsive (Do Not Modify This Form)

It is hereby certified that the information provided is an accurate and true account of contacts and solicitations for sub–contracting opportunities on this contract.

Signed:_____ Name/Title:_____ Date:_____

Failure to Complete, Sign and Submit Both Forms 10 & 20 SHALL render the Bid or Proposal Non-Responsive
Forms must be included with Bid / Proposal

Instructions for completing The Sub-(Contractors/Consultants/ Suppliers) Solicited Form (Form MBD-10)

This form must be submitted with all bids or proposals. **All** subcontractors (regardless of ownership or size) solicited and subcontractors from whom unsolicited quotations were received must be included on this form. The instructions that follow correspond to the headings on the form required to be completed. Note: Ability or desire to self-perform all work shall not exempt the prime from Good Faith Efforts to achieve participation.

- **Contract No.** This is the number assigned by the City of Tampa for the bid or proposal.
- **Contract Name.** This is the name of the contract assigned by the City of Tampa for the bid or proposal.
- **Contractor Name.** The name of your business and/or doing business as (dba) if applicable.
- **Address.** The physical address of your business.
- **Federal ID.** FIN. A number assigned to your business for tax reporting purposes.
- **Phone.** Telephone number to contact business.
- **Fax.** Fax number for business.
- **Email.** Provide email address for electronic correspondence.
- **No Firms were contacted or solicited for this contract.** Checking the box indicates that a pre-determined Subcontract Goal or Participation Plan Requirement was not set by the City resulting in your business not using subcontractors and will self-perform all work. If during the performance of the contract you employ subcontractors, the City must pre-approve subcontractors. Use of the "Sub-(Contractors/Consultants/Suppliers) Payments" form (MBD Form-30) must be submitted with every pay application and invoice. Note: Certified SLBE or WMBE firms bidding as Primes are not exempt from outreach and solicitation of subcontractors.
- **No Firms were contacted because.** Provide brief explanation why no firms were contacted or solicited.
- **See attached documents.** Check box, if after you have completed the DMI Form in its entirety, you need more space to list additional firms and/or if you have supplemental information/documentation relating to the form. All DMI data not submitted on the MBD Form-10 must be in the same format and have all requested data from MBD Form-10 included.

The following instructions are for information of any and all subcontractors solicited.

- **"S" = SLBE, "W" = WMBE.** Enter "**S**" for firms Certified by the City as Small Local Business Enterprises and/or "**W**" for firms Certified by the City as either Women/Minority Business Enterprise; **"O" = Non-certified others**.
- **Federal ID.** FIN. A number assigned to a business for tax reporting purposes. This information is critical in proper identification and payment of the contractor/subcontractor.
- **Company Name, Address, Phone & Fax**. Provide company information for verification of payments.
- **Type of Ownership.** Indicate the Ethnicity and Gender of the owner of the subcontracting business.
- **Trade, Services, or Materials** indicate the trade, service, or materials provided by the subcontractor. NIGP codes aka "National Institute of Governmental Purchasing" are listed at top section of document.
- **Contact Method L=letter, F=fax, E=Email, P=Phone.** Indicate with letter the method(s) of soliciting for bid.
- **Quote or Resp. (response) Rec'd (received) Y/N**. Indicate "Y" Yes if you received a quotation or if you received a response to your solicitation. Indicate "N" No if you received no response to your solicitation from the subcontractor. Must keep records: log, ledger, documentation, etc. that can validate/verify.

If additional information is required or you have questions, please contact the Equal Business Opportunity Program - Minority and Small Business Development Office at (813) 274-5522.

Failure to Complete, Sign and Submit Both Forms 10 & 20 SHALL render the Bid or Proposal Non-Responsive

City of Tampa – Schedule of All To-Be-Utilized Sub-(Contractors/Consultants/Suppliers)

(FORM MBD-20)

Contract No.:_____ Contract Name:_____
Company Name:_____Address:_____
Federal ID:_____ Phone:_____ Fax:_____ Email:_____

Check applicable box(es). Detailed Instructions for completing this form are on page 4 of 4.

[ ] See attached list of additional Firms Utilized and all supplemental information (List must comply to this form)
Note: Form MBD-20 must list ALL subcontractors To-Be-Utilized including Non-minority/small businesses

[ ] No Subcontracting/consulting (of any kind) will be performed on this contract.

[ ] No Firms are listed to be utilized because:_____

NIGP Code General Categories: Buildings = 909, General = 912, Heavy = 913, Trades = 914, Architects = 906, Engineers & Surveyors = 925, Supplier = 912-77

Enter "S" for firms Certified as Small Local Business Enterprises, "W" for firms Certified as Women/Minority Business Enterprise, "O" for Other Non-Certified

S = SLBE W=WMBE O =Neither Federal ID	Company Name Address Phone, Fax, Email	Type of Ownership (F=Female M=Male) BF BM = African Am. HF HM = Hispanic Am. AF AM = Asian Am. NF NM = Native Am. CF CM = Caucasian	Trade, Services, or Materials NIGP Code Listed above	$ Amount of Quote. Letter of Intent (LOI) if available	Percent of Scope or Contract %

Failure to Complete, Sign and Submit this form with your Bid or Proposal Shall render the Bid Non-Responsive. (Do Not Modify This Form)

Total ALL Subcontract / Supplier Utilization $_____
Total SLBE Utilization $ _____
Total WMBE Utilization $ _____
Percent SLBE Utilization of Total Bid/Proposal Amt. _____% Percent WMBE Utilization of Total Bid/Proposal Amt. _____%

It is hereby certified that the following information is a true and accurate account of utilization for sub-contracting opportunities on this Contract.

Signed:_____ Name/Title:_____ Date:_____

Failure to Complete, Sign and Submit Both Forms 10 & 20 SHALL render the Bid or Proposal Non-Responsive
Forms must be included with Bid / Proposal

Instructions for completing The Sub-(Contractors/Consultants/ Suppliers) to be Utilized Form

(Form MBD-20)

This form must be submitted with all bids or proposals. All subcontractors (regardless of ownership or size) projected to be utilized must be included on this form. Note: Ability or desire to self-perform all work shall not exempt the prime from Good Faith Efforts to achieve participation.

Contract No. This is the number assigned by the City of Tampa for the bid or proposal.

- **Contract Name.** This is the name of the contract assigned by the City of Tampa for the bid or proposal.
- **Contractor Name.** The name of your business and/or doing business as (dba) if applicable.
- **Address.** The physical address of your business.
- **Federal ID.** FIN. A number assigned to your business for tax reporting purposes.
- **Phone.** Telephone number to contact business.
- **Fax.** Fax number for business.
- **Email.** Provide email address for electronic correspondence.
- **No Subcontracting/consulting (of any kind) will be performed on this contract.** Checking box indicates your business will not use subcontractors when no Subcontract Goal or Participation Plan Requirement was set by the City, but will self-perform all work. When subcontractors are utilized during the performance of the contract, the "Sub-(Contractors/Consultants/Suppliers) Payments" form (MBD Form-30) must be submitted with every pay application and invoice. Note: certified SLBE or WMBE firms bidding as Primes are not exempt from outreach and solicitation of subcontractors, including completion and submitting Form-10 and Form-20.
- **No Firms listed To-Be-Utilized.** Check box; provide brief explanation why no firms were retained when a goal or participation plan requirement was set on the contract. Note: mandatory compliance with Good Faith Effort outreach (GFECP) requirements applies (MBD Form-50) and supporting documentation must accompany the bid.
- **See attached documents.** Check box, if after completing the DMI Form in its entirety, you need more space to list additional firms and/or if you have supplemental information/documentation relating to the scope/value/percent utilization of subcontractors. Reproduce copies of MBD-20 and attach. All data not submitted on duplicate forms must be in the same format and content as specified in these instructions.

The following instructions are for information of Any and All subcontractors To Be Utilized.

- **Federal ID.** FIN. A number assigned to a business for tax reporting purposes. This information is critical in proper identification of the subcontractor.
- **"S" = SLBE, "W" = WMBE.** Enter "**S**" for firms Certified by the City as Small Local Business Enterprises and/or "**W**" for firms Certified by the City as Women/Minority Business Enterprise; **"O" = Non-certified others**.
- **Company Name, Address, Phone & Fax**. Provide company information for verification of payments.
- **Type of Ownership.** Indicate the Ethnicity and Gender of the owner of the subcontracting business.
- **Trade, Services, or Materials (NIGP code if Known)** Indicate the trade, service, or material provided by the subcontractor. Abbreviated list of NIGP is available at http:/www.tampagov.net/mbd "Information Resources".
- **Amount of Quote, Letters of Intent** (required for both SLBEs and WMBEs).
- **Percent of Work/Contract.** Indicate the percent of the total contract price the subcontract(s) represent. For CCNA only (i.e. Consultant A/E Services) you must indicate subcontracts as percent of total scope/contract.
- **Total Subcontract/Supplier Utilization.** – Provide total dollar amount of all subcontractors/suppliers projected to be used for the contract. (Dollar amounts may be optional in CCNA depending on solicitation format).
- **Total SLBE Utilization.** Provide total dollar amount for all projected SLBE subcontractors/Suppliers used for this contract. (Dollar amounts may be optional in CCNA proposals depending on the solicitation format).
- **Total WMBE Utilization.** Provide total dollar amount for all projected WMBE subcontractors/Suppliers used for this contract. (Dollar amounts may be optional in CCNA proposals depending on the solicitation format).
- **Percent SLBE Utilization.** Total amount allocated to SLBEs divided by the total bid/proposal amount.
- **Percent WMBE Utilization.** Total amount allocated to WMBEs divided by the total bid/proposal amount.

If additional information is required or you have questions, please contact the Equal Business Opportunity Program - Minority and Small Business Development Office at (813) 274-5522.

TAMPA BID BOND
Contract 19-C-00049; FY19 City-Wide Stormwater Box Culvert Rehabilitation

KNOW ALL MEN BY THESE PRESENTS, that we, _____

_____

(hereinafter called the Principal) and _____

(hereinafter called the Surety) a Corporation chartered and existing under the laws of the State of _____, with its principal offices in the City of _____, and authorized to do business in the State of Florida, are held and firmly bound unto the City of Tampa, a Municipal Corporation of Hillsborough County, Florida, in the full and just sum of 5% of the amount of the (Bid) (Proposal) good and lawful money of the United States of America, to be paid upon demand of the City of Tampa, Florida, to which payment will and truly to be made we bind ourselves, our heirs, executors, administrators, successors, and assigns, jointly and severally and firmly these presents.

WHEREAS, the Principal is about to submit, or has submitted to the City of Tampa, Florida, a Proposal for the construction of certain facilities for the City designated Contract 19-C-00049, FY19 City-Wide Stormwater Box Culvert Rehabilitation.

WHEREAS, the Principal desires to file this Bond in accordance with law, in lieu of a certified Bidder's check otherwise required to accompany this Proposal.

NOW, THEREFORE: The conditions of this obligation are such that if the Proposal be accepted, the Principal shall, within twenty (20) days after the date of receipt of written Notice of Award, execute a contract in accordance with the Proposal and upon the terms, conditions and price set forth therein, in the form and manner required by the City of Tampa, Florida and execute a sufficient and satisfactory Public Construction Bond payable to the City of Tampa, Florida in an amount of one hundred percent (100%) of the total contract price, in form and with security satisfactory to said City, then this Bid Bond obligation is to be void; otherwise to be and remain in full force and virtue in law, and the Surety shall, upon failure of the Principal to comply with any or all of the foregoing requirements within the time specified above, immediately pay to the aforesaid City, upon demand, the amount thereof, in good and lawful money of the United States of America, not as a penalty, but as liquidated damages.

IN TESTIMONY THEREOF, the Principal and Surety have caused these presents to be duly signed and sealed this _____ day of _____, 20___.

Principal _____

BY _____

TITLE _____

BY _____

TITLE _____

(SEAL) _____
Producing Agent

_____
Producing Agent's Address

_____
Name of Agency

_____
The addition of such phrases as "not to exceed" or like import shall render the (Bid) (Proposal)non-responsive.

AGREEMENT

For furnishing all labor, materials and equipment, together with all work incidental thereto, necessary and required for the performance of the work for the construction of Contract 19-C-00049 in accordance with your Proposal dated _____, amounting to a total of $_____ as completed in accordance with subsections I-2.09 and I-2.10 of the Instruction to Bidders.

This AGREEMENT, made and entered into in triplicate, between the City of Tampa, Florida, hereinafter called the City, and _____ hereinafter called the Contractor, as of the _____ day of _____, 20___ when the City Council of the City of Tampa, Florida adopted a Resolution authorizing, among other things, the Mayor's execution of this Agreement.

WITNESSETH that, in consideration of the mutual stipulations, agreements, and covenants herein contained, the parties hereto have agreed and hereby agree with each other, the Party of the First Part for itself, its successors and assigns, and the Party of the Second Part for itself, or himself, or themselves, and its successors and assigns, or his or their executors, administrators and assigns, as follows:

Contract 19-C-00049; FY19 City-Wide Stormwater Box Culvert Rehabilitation, shall include, but not be limited to, furnishing labor, materials, and equipment to inspect, clean, and rehabilitate stormwater pipes and box culverts including maintenance of traffic, installation of structures, sodding, surface restoration. with all associated work required for a complete project in accordance with the Contract Documents.

Contract Documents referred to in Article 1.01 of this Agreement also includes this volume, applicable standard drawings, the plans and any provisions referred to whether actually attached or not.

TAMPA AGREEMENT

SECTION 1
GENERAL

ARTICLE 1.01 THE CONTRACT

Except for titles, subtitles, headings, running headlines, and tables of contents (all of which are printed herein merely for convenience), the following, except for such portions thereof as may be specifically excluded, constitute the Contract:

The Notice to Bidders;
The Instructions to Bidders, including Special Instructions and General Instructions;
The Proposal;
The Bid Bond;
The Certification of Nonsegregated Facilities;
The Notice of Award;
The Agreement;
The Performance Bond;
The Notice To Proceed;
The Specifications, including the General Provisions, the Workmanship and Materials, the Specific Provisions or the Contract Items
The Plans;
All Supplementary Drawings Issued after award of the Contract;
All Addenda issued by the City prior to the receipt of proposals;
All provisions required by law to be inserted in this Contract, whether actually inserted or not.

ARTICLE 1.02 DEFINITIONS

The following words and terms, or pronouns used in their stead, shall, wherever they appear in this Contract, be construed as follows, unless different meaning is clear from the context:

(a)"City" shall mean the City of Tampa, Florida, represented by its Mayor and City Council, Party of the First Part, or such other City official as shall be duly empowered to act for the City on matters relating to this Contract.

(b)"Contractor" shall mean the Party of the Second Part hereto, whether corporation, firm or individual, or any combination thereof, and its, their, or his successors, personal representatives, executors, administrators, and assigns, and any person, firm or corporation who or which shall at any time be substituted in the place of the Party of the Second Part under this Contract.

(c)"Engineer" shall mean the Director of the Department or his duly authorized representative.

(d)"Consultant" shall mean the engineering or architectural firm or individual employed by the City to consult with and advise the City in the construction of the project.

(e)"Surety" shall mean any person, firm or corporation that has executed as Surety the Contractor's Performance Bond securing the performance of this Contact.

(f)"The Work" shall mean everything expressly or implied required to be furnished and done by the Contractor under the Contract, and shall include both Contract Work and Extra Work.

(g)"Contract Work" shall mean everything expressly or implied required to be furnished and done by the Contractor by any one or more of the Contract parts referred to in Article 1.01 hereof, except Extra Work, as hereinafter defined; it being understood that, in case of any inconsistency in or between any part or parts of this Contract, the Engineer shall determine which shall prevail.

(h)"Contract" or "Contract Documents" shall mean each of the various part of the Contract referred to in Article 1.01 hereof, both as a whole and severally.

(i)"Extra Work" shall mean work other than that required either expressly or implied by the contract in its present form.

(j)"Plans" shall mean only those drawings specifically referred to as such in these documents, or in any Addendum. Drawings issued after the execution of the Contract to explain further, or to illustrate, or to show changes in the work, will be known as "Supplementary Drawings" and shall be binding upon the Contractor with the same force as the Plans.

(k)"Specifications" shall mean all of the directions, requirements, and standards of performance applying to the work, as hereinafter detailed and designated as such, or which may be issued in an addendum.

(l)"Addendum or Addenda" shall mean the additional contract provisions issued in writing prior to the receipt of bids.

(m)"Notice" shall mean written notice. Notice shall be served upon the Contractor, either personally or by leaving the said notice at his residence or with any employee found on the work, or addressed to the Contractor at the residence or place of business given in his proposal and deposited in a postpaid wrapper in any post office box regularly maintained by the United States Post Office.

(n)"Project" shall mean the entire improvement package or related work. The "project" may consist of several different, but related, contracts.

(o)"Site" shall mean, and be limited to, the area upon or in which the Contractor's operations are carried on and such other appropriate areas as may be designed as such by the Engineer.

(p)"Subcontractor" shall mean any person, firm, or corporation, other than employees of the Contractor, who or which contracts with the Contractor to furnish, or actually furnishes labor, or labor and materials, or labor and equipment or labor, materials, and equipment at the site.

(q)Whenever in the Contract the words "directed", "required", "permitted", "ordered", "designated", "prescribed", and words of like import are used, they shall imply the direction, requirement, permission, order, designation, or prescription of the Engineer; and "approved", "acceptable", "satisfactory", "in the judgement of", and words of like import shall mean approved by, or acceptable to, or satisfactory to, or in the judgment of the Engineer.

(r)Whenever in the Contract the word "day" is used, it shall mean calendar day.

(s)"Final Acceptance" shall mean acceptance of the

work as evidenced by an official resolution of the City. Such acceptance shall be deemed to have taken place only if and when an approving resolution has been adopted by the City Council. The final acceptance shall be signed only after the City has assured itself by tests, inspection, or otherwise, that all of the provisions of the Contract have been carried out to its satisfaction.

(t)"Eastern Standard Time" shall be construed as the time being observed in the City on the day proposals are received or other documents issued or signed.

SECTION 2
POWERS OF THE CITY'S REPRESENTATIVES

ARTICLE 2.01 THE ENGINEER

It is covenanted and agreed that the Engineer, in addition to those matters elsewhere herein expressly made subject to his determination, direction, or approval, shall have the power, subject to such express provisions and limitations herein contained as are not in conflict herewith, and subject to review by the Mayor and City Council:

(a)To monitor the performance of the work.

(b)To determine the amount, kind, quality, sequence, and location of the work to be paid for hereunder and, when completed, to measure such work for payment.

(c)To determine all questions of an engineering character in relation to the work, to interpret the Plans, Specifications and Addenda.

(d)To determine how the work of this Contract shall be coordinated with the work of other contractors engaged simultaneously on this project.

(e)To make minor changes in the work as he deems necessary, provided such changes do not result in a net increase in the cost to the City or to the Contractor of the work to be done under the Contract.

(f)To amplify the Plans, add explanatory information and furnish additional Specifications and Drawings consistent with the intent of the Contract Documents.

The power of the Engineer shall not be limited to the foregoing enumeration, for it is the intent of this Contract that all of the work shall be subject to his determinations and approval, except where the determination or approval of someone other than the Engineer is expressly called for herein and except as subject to review by the Mayor and City Council. All orders of the Engineer requiring the Contractor to perform work as Contract work shall be promptly obeyed by the Contractor.

The Engineer shall not, however, have the power to issue an extra work order, and the performance of such work on the order of the Engineer without previously obtaining written confirmation thereof from the Mayor in accordance with Article 7.02 hereof may constitute a waiver of any right to extra compensation therefor. The Contractor is warned that the Engineer has no power to change the terms and provisions of this Contract, except minor changes where such change results in no net increase in the Contract Price.

ARTICLE 2.02 DIRECTOR

The Director of the Department in addition to those matters expressly made subject to his determination, direction or approval in his capacity as "Engineer", shall also have the power:

(a)To review any and all questions in relation to this Contract and its performance, except as herein otherwise specifically provided, and his determination upon such review shall be final and conclusive upon the Contractor.

(b)With the approval of the Mayor and City Council to authorize modifications or changes in the Contract so as to require: (1) the performance of extra work, or (2) the omission of Contract work whenever he deems it in the interest of the City to do so, or both.

(c)To suspend the whole or any part of the work whenever, in his judgment, such suspension is required: (1) in the interest of the City generally, or (2) to coordinate the work of the various Contractors engaged on this project, or (3) to expedite the completion of the entire project, even though the completion of this particular Contract may be thereby delayed, <u>without compensation to the Contractor for such suspension other than extending the time for the completion of the work, as much as it may have been, in the opinion of the City, delayed by such a suspension.</u>

(d)If, before the final acceptance of all the work contemplated herein, it shall be deemed necessary to take over, use, occupy, or operate any part of the completed or partly completed work, the Engineer shall have the right to do so and the Contractor will not, in any way, interfere with or object to the use, occupation, or operation of such work by the City after receipt of notice in writing from the Engineer that such work or part thereof will be used by the City on and after the date specified in such notice. Such taking over, use, occupancy or operation of any part of the completed or partially completed work shall not constitute final acceptance or approval of any such part of the work.

ARTICLE 2.03 NO ESTOPPEL

The City shall not, nor shall any department, officer, agent, or employee thereof, be bound, precluded, or estopped by any determination, decision, acceptance, return, certificate, or payment made or given under or in connection with this Contract by any officer, agent or employee of the City at any time either before or after final completion and acceptance of the work and payment therefor: (a) from showing the true and correct classification, amount, quality, or character of the work done, or that any determination, decision, acceptance, return certificate or payment is untrue, incorrect or improperly made in any particular, or that the work or any part thereof does not in fact conform to the requirements of the Contract Documents, and (b) from demanding and recovering from the Contractor any overpayments made to him or such damages as it may sustain by reason his failure to comply with the requirements of the Contract of Documents, or both.

ARTICLE 2.04 NO WAIVER OF RIGHTS

Neither the inspection, nor any order, measurements or certificate of the City or its employees, officers, or agents, nor by any order of the City for payment of money, nor any money, nor payments for or acceptance of the whole or any part of the work by the City, nor any extension of time, nor any changes in the Contract, Specifications or Plans, nor any possession by the City or its employees shall operate as a

waiver of any provisions of this Contract, nor any power herein provided nor shall any waiver of any breach of this Contract be held as a waiver of any other subsequent breach.

Any remedy provided in this Contract shall be taken and construed as cumulative, namely, in addition to each and every other suit, action, or legal proceeding. The City shall be entitled as of right to an injunction against any breach of the provisions of this Contract.

SECTION 3
PERFORMANCE OF WORK

ARTICLE 3.01 CONTRACTOR'S RESPONSIBILITY

The Contractor shall do all the work and furnish, at his own cost and expense, all labor, materials, equipment, and other facilities, except as herein otherwise provided, as may be necessary and proper for performing and completing the work under this Contract. The Contractor shall be responsible for the entire work until completed and finally accepted by the City.

The work shall be performed in accordance with the true intent and meaning of the Contract Documents. Unless otherwise expressly provided, the work must be performed in accordance with the best modern practice, with materials as specified and workmanship of the highest quality, all as determined by and entirely to the satisfaction of the Engineer.

Unless otherwise expressly provided, the means and methods of construction shall be such as the Contractor may choose, subject, however, to the approval of the Engineer. Only adequate and safe procedure, methods, structures and equipment shall be used. The Engineer's approval or the Engineer's failure to exercise his right thereon shall not relieve the Contractor of obligations to accomplish the result intended by the Contract, nor shall such create a cause of action for damages.

ARTICLE 3.02 COMPLIANCE WITH LAWS

The Contractor must comply with all local, State and Federal laws, rules, ordinances and regulations applicable to this Contract and to the work done hereunder, and must obtain, at his own expense, all permits, licenses or other authorization necessary for the prosecution of the work.

No work shall be performed under this Contract on Sundays, legal holidays or after regular working hours without the express permission of the Engineer. Where such permission is granted, the Engineer may require that such work be performed without additional expense to the City.

ARTICLE 3.03 INSPECTION

During the progress of the work and up to the date of final acceptance, the Contractor shall, at all times, afford the representatives of the City, the Florida Department of Environmental Regulation, and if applicable, the Federal Environmental Protection Agency and the Federal Department of Labor every reasonable, safe and proper facility for inspecting the work done or being done at the site. The inspection of any work shall not relieve the Contractor of any of his obligations to perform proper and satisfactory work as herein specified. Finished or unfinished work found not to be in strict accordance with the Contract shall be replaced as directed by the Engineer, even though such work may have been previously approved and payment made therefor.

The City shall have the right to reject materials and workmanship which are defective or require their correction. Rejected work and materials must be promptly removed from the site, which must at all times be kept in a reasonably clean and neat condition.

Failure or neglect on the part of the City to condemn or reject bad or inferior work or materials shall not be construed to imply an acceptance of such work or materials, if it becomes evident at any time prior to the final acceptance of the work by the City. Neither shall it be construed as barring the City at any subsequent time from the recovery of damages of such a sum of money as may be needed to build anew all portions of the work in which inferior work or improper materials were used, wherever found.

Should it be considered necessary or advisable by the City at any time before final acceptance of the entire work to make examinations of work already completed, by removing or tearing out all or portions of such work, the Contractor shall, on request, promptly furnish all necessary facilities, labor, and material for that purpose. If such work is found to be defective in any material respect, due to the fault of the Contractor or his subcontractors, he shall defray all expenses of such examination and of satisfactory reconstruction. If, however, such work is found to meet the requirements of the Contract, the cost of examination and restoration of the work shall be considered an item of extra work to be paid for in accordance with the provisions of Article 7.02 hereof.

ARTICLE 3.04 PROTECTION

During performance and until final acceptance, the Contractor shall be under an absolute obligation to protect the finished and unfinished work against any damage, loss, or injury. The Contractor shall take proper precaution to protect the finished work from loss or damage, pending completion and the final acceptance of all the work included in the entire Contract, provided that such precaution shall not relieve the Contractor from any and all liability and responsibility for loss or damage to the work occurring before final acceptance by the City. Such loss or damage shall be at the risk of and borne by the Contractor, whether arising from acts or omissions of the Contractor or others. In the event of any such loss or damage, the Contractor shall forthwith repair, replace, and make good the work without extension of time therefor, except as may be otherwise provided herein.

The provisions of this Article shall not be deemed to create any new right of action in favor of third parties against the Contractor or the City.

ARTICLE 3.05 PRESERVATION OF PROPERTY

The Contractor shall preserve from damage all property along the line of the work, or which is in the vicinity of or is in anywise affected by the work, the removal or destruction of which is not called for by the Plans. This applies, but is not limited, to the public utilities, trees, lawn areas, building monuments, fences, pipe and underground structures, public streets (except natural wear and tear of streets resulting from legitimate use thereof by the Contractor), and wherever such property is damaged due to the activities of the Contractor, it shall be immediately restored to its original condition by the Contractor and at his own expense.

In case of failure on the part of the Contractor to restore such property, or make good such damage or injury, the City may, upon forty-eight (48) hour written notice, proceed to repair, rebuild, or otherwise restore such property as may be deemed necessary, and the cost thereof will be deducted from any monies due or which may become due the Contractor under this Contract. Nothing in this clause shall prevent the Contractor from receiving proper compensation for the removal, damage, or replacement of any public or private property not shown on the Plans, when this is made necessary by alteration of grade or alignment authorized by the Engineer, provided that such property has not been damaged through fault of the Contractor, his employees or agents.

ARTICLE 3.06 BOUNDARIES
The Contractor shall confine his equipment, apparatus, the storage of materials, supplies and apparatus of his workmen to the limits indicated on the plans, by law, ordinances, permits or direction of the Engineer.

ARTICLE 3.07 SAFETY AND HEALTH REGULATIONS
The Contractor shall comply with the Department of Labor Safety and Health Regulations for construction promulgated under the Occupational Safety and Health Act of 1970 (PL 91- 596) and under Section 107 of the Contract Work Hours and Safety Standards Act (PL91-54).

ARTICLE 3.08 TAXES
All taxes of any kind and character payable on account of the work done and materials furnished under this Contract shall be paid by the Contractor and shall be deemed to have been included in his bid. The laws of the State of Florida provide that sales and use taxes are payable by the Contractor upon the tangible personal property incorporated in the work and such taxes shall be paid by the Contractor and shall be deemed to have been included in his bid.

ARTICLE 3.09 ENVIRONMENTAL CONSIDERATIONS
The Contractor, in the performance of the work under this Contract, shall comply with all Local, State and Federal laws, statutes, ordinances, rules and regulations applicable to protection of the environment; and, in the event he violates any of the provisions of same, he shall be answerable to the Local, State and Federal agencies designated by law to protect the environment. In the event the City receives, from any of the environmental agencies, a citation which is occasioned by an act or omission of the Contractor or his subcontractor or any officers, employees or agents of either, it is understood and agreed that the Contractor shall automatically become a party-respondent under said citation; and the City immediately shall notify the Contractor and provide him with a copy of said citation.

The Contractor shall comply with the requirements of the citation and correct the offending conditions(s) within the time stated in said citation and further shall be held fully responsible for all fines and/or penalties.

SECTION 4
TIME PROVISIONS

ARTICLE 4.01 TIME OF START AND COMPLETION
The Contractor must commence work within thirty (30) days subsequent to the date of the receipt of the "Notice to Proceed" by the City unless otherwise provided in the Specific Provisions and Special Instructions. Time being of the essence of this Contract, the Contractor shall thereafter prosecute the work diligently, using such means and methods of construction as well as secure its full completion in accordance with the requirements of the Contract Documents no later than the date specified therefor, or on the date to which the time for completion may be extended.

The Contractor must complete the work covered by this Contract in the number of consecutive calendar days set forth in the Instructions to Bidders, unless the date of completion is extended pursuant to the provisions of Article 4.05 hereof. The period for performance shall start from the date of signing of this Agreement by the City.

The actual date of completion will be established after a final inspection as provided in Article 4.07 hereof.

ARTICLE 4.02 PROGRESS SCHEDULE
To enable the work to be laid out and prosecuted in an orderly and expeditious manner, the Contractor shall submit to the Engineer a proposed progress schedule within fifteen (15) days after the award of this Contract.

The schedule shall state the Contract starting date, time for completion and date of completion and shall show the anticipated time of starting and completion of each of the various operations to be performed under this Contract, together with all necessary and appropriate information regarding sequence and correlation of work and an estimated time required for the delivery of all materials and equipment required for the work. The proposed schedule shall be revised as directed by the Engineer until finally approved by him, and, after such approval, shall be strictly adhered to by the Contractor. The approved progress schedule may be changed only with the written permission of the Engineer.

If the Contractor shall fail to adhere to the approved progress schedule or the schedule as revised, he shall promptly adopt such other or additional means and methods of construction as will make up for the time lost, and will assure completion in accordance with the contract time.

ARTICLE 4.03 APPROVAL REQUESTS
From time to time, as the work progresses and in the sequence indicated by the approved schedule, the Contractor must submit to the Engineer a specific request, in writing, for each item of information or approval required of him by the Contract. These requests must be submitted sufficiently in advance of the date upon which the information or approval is actually required by the Contractor to allow for the time the Engineer may take to act upon such submissions or resubmissions. The Contractor shall not have any right to an extension of time on account of delays due to his failure to submit his requests for the required information or the required approval in accordance with these requirements.

ARTICLE 4.04 COORDINATION WITH OTHER CONTRACTORS
During progress of the work, other Contractors may be engaged in performing other work on this project or on other projects on the site. In that event, the Contractor shall coordinate the work to be done hereunder with the work of such other Contractors in such manner as the Engineer may direct.

ARTICLE 4.05 EXTENSION OF TIME
If such an application is made, the Contractor shall be entitled to an extension of time for delay in completion of the work should the Contractor be obstructed or delayed in the commencement, prosecution or completion of any part of said work by any act or delay of the City, or by acts or omissions of other Contractors on this project, or by a riot, insurrection, war, pestilence, acts of public authorities, fire, lightning, hurricanes, earthquakes, tornadoes, floods, extremely abnormal and excessive inclement weather as indicated by the records of the local weather bureau for a five-year period preceding the date of the Contract, or by strikes, or other causes, which causes of delay mentioned in this Article, in the opinion of the City, are entirely beyond the expectation and control of the Contractor.

The Contractor shall, however, be entitled to an extension of time for such causes only for the number of days of delay which the City may determine to be due solely to such causes and only to the extent that such occurrences actually delay the completion of the project and then only if the Contractor shall have strictly complied with all of the requirements of Articles 4.01, 4.02, 4.03 and 4.04 hereof. It is hereby understood that the determination by the Engineer as to the order and sequence of the work shall not in itself constitute a basis for extension of time.

The determination made by the City on an application for an extension of time shall be binding and conclusive on the Contractor.

Delays caused by failure of the Contractor's materialmen, manufacturers, and dealers to furnish approved working drawings, materials, fixtures, equipment, appliances, or other fittings on time or failure of subcontractors to perform their work shall not constitute a basis of extension of time.

The Contractor agrees to make no claim for damages for delay in the performance of this Contract occasioned by any act or omission to act of the City or any of its representatives or because of any injunction which may be brought against the City or its representatives and agrees that any such claim shall be fully compensated for by an extension of time to complete performance of the work as provided herein.

ARTICLE 4.06 LIQUIDATED DAMAGES
It is mutually agreed between the parties that time is the essence of this Contract and that there will be on the part of the City considerable monetary damage in the event the Contractor should fail to complete the work within the time fixed for completion in the Contract or within the time to which such completion may have been extended.

The amount per day set forth in the Instructions to Bidders is hereby agreed upon as the liquidated damages for each and every calendar day that the time consumed in completing the work under this Contract exceeds the time allowed.

This amount shall, in no event, be considered as a penalty or otherwise than as the liquidated and adjusted damages to the City because of the delay and the Contractor and his Surety agree that the stated sum per day for each such day of delay shall be deducted and retained out of the monies which may become due hereunder and if not so deductible, the Contractor and his Surety shall be liable therefor.

ARTICLE 4.07 FINAL INSPECTION
When the work has been completed in accordance with the requirements of the Contract and final cleaning up performed, a date for final inspection of the work by the Engineer shall be set by the Contractor in a written request therefor, which date shall be not less than ten (10) days after the date of such request. The work will be deemed complete as of the date so set by the Contractor if, upon such inspection, the Engineer determines that no further work remains to be done at the site.

If such inspection reveals interms of work still to be performed, however, the Contractor shall promptly perform them and then request a reinspection. If, upon such inspection, the Engineer determines that the work is complete, the date of final completion shall be deemed to be the last day of such reinspection.

SECTION 5
SUBCONTRACTS AND ASSIGNMENTS

ARTICLE 5.01 LIMITATIONS AND CONSENT
The Contractor shall not assign, transfer, convey, sublet or otherwise dispose of this Contract or of his right, title, or interest therein, or his power to execute such Contract, or to assign any monies due or to become due thereunder to any other person, firm or corporation unless the previous written consent of the City shall first be obtained thereto and the giving of any such consent to a particular subcontract or assignment shall not dispense with the necessity of such consent to any further or other assignment.

Before making any subcontract, the Contractor must submit a

written statement to the Engineer, giving the name and address of the proposed contractor, the portion of the work and materials which he is to perform and furnish and any other information tending to prove that the proposed subcontractor has the necessary facilities, skill, integrity, past experience and financial resources to perform the work in accordance with the terms and conditions of this Contract.

If the City finds that the proposed subcontractor is qualified, the Contractor will be notified in writing. The City may revoke approval of any subcontractor when such subcontractor evidences an unwillingness or inability to perform his work in strict accordance with these Contract Documents. Notice of such revocation of approval will be given in writing to the Contractor.

The Contractor will promptly, upon request, file with the City a conformed copy of the subcontract. The Contractor shall cause appropriate provisions to be inserted in all subcontracts relative to the work to bind subcontractors to the Contractor by the terms of these Contract Documents, insofar as applicable to the work of subcontractors, and to give the Contractor the same power as regards terminating any subcontracts that the City may exercise over the Contractor under provisions of these Contract Documents.

The Contractor shall be required to perform with his own forces at least twenty-five (25) percent of the work, unless written consent to subcontract a greater percentage of the work is first obtained from the City.

ARTICLE 5.02 RESPONSIBILITY
The approval by the City of a subcontractor shall not relieve the Contractor of any of his responsibilities, duties, and liabilities hereunder. The Contractor shall be solely responsible to the City for the acts or defaults or omissions of his subcontractor and of such subcontractor's officers, agents, and employees, each of whom shall for all purposes be deemed to be the agent or employee of the Contractor. Nothing contained in the Contract Documents shall create any contractual relationship between any subcontractor and the City.

SECTION 6
SECURITY AND GUARANTY

ARTICLE 6.01 CONTRACT SECURITY
The Contractor shall execute and deliver to the City a Performance Bond on the form as provided herein, in an amount at least equal to one hundred (100) percent of the full Contract price, such Bond to be executed by a surety company acceptable to the City. The surety on such Performance Bond shall be a surety company duly authorized to do business in the State of Florida, and the Bond shall be issued or countersigned by a local resident producing agent of such surety company who is a resident of the State of Florida, regularly commissioned and licensed in said State, and satisfactory evidence of the authority of the person or persons executing such Bond shall be submitted with the Bond. The Performance Bond shall serve as security for the faithful performance of this Contract, including maintenance and guaranty provisions, and for the payment of all persons performing labor and furnishing materials in connection with the Contract. The premiums on the Performance Bond shall be paid by the Contractor.

If, at any time, the City shall become dissatisfied with any surety or sureties then upon the Performance Bond, or if for any other reason such bond shall cease to be adequate security for the City, the Contractor shall, within five days after notice so to do, substitute an acceptable Bond in such form and sum and signed by such other sureties as may be satisfactory to the City. The premiums on such Bond shall be paid by the Contractor. No further partial payments shall be deemed due or shall be made until the new sureties have qualified.

ARTICLE 6.02 CONTRACTORS INSURANCE
Insurance required shall be as indicated on Special Instructions pages beginning with "INS-1"

ARTICLE 6.03 AGAINST CLAIMS AND LIENS
The City may withhold from the Contractor as much as any approved payments to him as may, in the opinion of the City, be necessary to secure (a) just claims of any persons supplying labor or materials to the Contractor or any of his subcontractors for the work then due and unpaid; (b) loss due to defective work not remedied, or (c) liability, damage, or loss due to injury to persons or damages to the work or property of other contractors, subcontractors, or others, caused by the act or neglect of the Contractor or of any of his subcontractors. The City shall have the right, as agent for the Contractor, to apply any such amounts so withheld in such manner as the City may deem proper to satisfy such claims or to secure such protection. Such application of such money shall be deemed payments for the account of the Contractor.

ARTICLE 6.04 MAINTENANCE AND GUARANTY
The Contractor hereby guarantees all the work furnished under this Contract against any defects in workmanship and materials for a period of one year following the date of final acceptance of the work by the City. Under this guarantee, the Contractor hereby agrees to make good, without delay, at his own expense, any failure of any part of the work due to faulty materials or manufacture, construction, or installation, or the failure of any equipment to perform satisfactorily all the work put upon it within the limits of the Contract Documents, and further, shall make good any damage to any part of the work caused by such failure. It is hereby agreed that the Performance Bond shall fully cover all guarantees contained in this Article.
It is also agreed that all warranties, expressed or implied, inure to the benefit of the City and are enforceable by the City.

SECTION 7
CHANGES

ARTICLE 7.01 MINOR CHANGES
The City reserves the right to make such additions, deductions, or changes to this Contract from time to time as

it deems necessary and in a manner not materially affecting the substance thereof or materially changing the price to be paid in order to carry out and complete more fully and perfectly the work herein agreed to be done and performed. This Contract shall in no way be invalidated by any such additions, deductions, or changes, and no claim by the Contractor shall be made for any loss of anticipated profits thereby.

Construction conditions may require that minor changes be made in the location and installation of the work and equipment to be furnished and other work to be performed hereunder, and the Contractor when ordered by the Engineer, shall make such adjustments and changes in said locations and work as may be necessary, without additional cost to the City, provided such adjustments and changes do not alter the character, quantity of cost of the work as a whole, and provided further that Plans and Specifications showing such adjustments and changes are furnished to the Contractor by the City within a reasonable time before any work involving such adjustment and changes is begun. The Engineer shall be the sole judge of what constitutes a minor change for which no additional compensation shall be allowed.

ARTICLE 7.02 EXTRA WORK

The City may at any time by a written order and without notice to the sureties require the performance of such extra work as it may find necessary or desirable. An order for extra work shall be valid only if issued in writing and signed by the Mayor and the work so ordered must be performed by the Contractor.

The amount of compensation to be paid to the Contractor for any extra work as so ordered shall be determined as follows:

(a)By such applicable unit prices, if any, as are set forth in the Proposal; or

(b)If no such unit prices are set forth then by a lump sum or other unit prices mutually agreed upon by the City and the Contractor; or

(c)If no such unit prices are set forth in the Proposal and if the parties cannot agree upon a lump sum or other unit prices then by the actual net cost in money to the Contractor of the extra work performed, which cost shall be determined as follows:

(1) For all labor and foreman in direct charge of the authorized operations, the Contractor shall receive the current local rate of wages to be agreed upon, in writing, before starting such work for each hour that said labor and foremen are actually engaged thereon, to which shall be added an amount equal to 25 percent of the sum thereof which shall be considered and accepted as full compensation for general supervision, FICA taxes, contributions under the Florida Unemployment Compensation Act, insurance, bond, subcontractor's profit and overhead, the furnishing of small tools and miscellaneous equipment used, such as picks, shovels, hand pumps, and similar items.

(2) For all materials used, the Contractor shall receive the actual cost of such materials delivered at the site or previously approved delivery point as established by original receipted bills. No percentage shall be added to this cost.

(3) For special equipment and machinery such as power-driven pumps, concrete mixers, trucks, and tractors, or other equipment, required for the economical performance of the authorized work, the Contractor shall receive payment based on the average local area rental price for each item of equipment and the actual time of its use on the work. No percentage shall be added to this sum.

(4) Records of extra work done under this procedure shall be reviewed at the end of each day by the Contractor or his representative and the Engineer. Duplicate copies of accepted records shall be made and signed by both Contractor or his representative and the Engineer, and one copy retained by each.

Request for payment for approved and duly authorized extra work shall be submitted in the same form as Contract work or in the case of work performed under paragraph (c) (1) above upon a certified statement supported by receipted bills. Such statement shall be submitted for the current Contract payment for the month in which the work was done.

ARTICLE 7.03 DISPUTED WORK

If the Contractor is of the opinion that any work required, necessitated, or ordered violates the terms and provisions of this Contract, he must promptly notify the Engineer, in writing, of his contentions with respect thereto and request a final determination thereof. If the Engineer determines that the work in question is Contract work and not extra work or that the order complained of is proper, he will direct the Contractor to proceed and the Contractor shall promptly comply. In order, however, to reserve his right to claim compensation for such work or damages resulting from such compliance, the Contractor must, within five (5) days after receiving notice of the Engineer's determination and direction, notify the City in writing that the work is being performed or that the determination and direction is being complied with under protest. Failure of the Contractor to notify shall be deemed as a waiver of claim for extra compensation or damages therefor.

Before final acceptance by the City, all matters of dispute must be adjusted to the mutual satisfaction of the parties thereto. Final determinations and decisions, in case any questions shall arise, shall constitute a condition precedent to the right of the Contractor to receive the money therefor until the matter in question has been adjusted.

ARTICLE 7.04 OMITTED WORK

The City may at any time by a written order and without notice to the sureties require the omission of such Contract work as it may find necessary or desirable.

An order for omission of work shall be valid only if signed by the Mayor and the work so ordered must be omitted by the Contractor. The amount by which the Contract price shall be reduced shall be determined as follows:

(a) By such applicable unit prices, if any, as are set forth in the Contract; or

(b) By the appropriate lump sum price set forth in the Contract; or

(c) By the fair and reasonable estimated cost to the City

of such omitted work as determined by the Engineer and approved by the City.

SECTION 8
CONTRACTOR'S EMPLOYEES

ARTICLE 8.01 CHARACTER AND COMPETENCY

The Contractor and his subcontractors shall employ upon all parts of the work herein contracted for only competent, skillful, and trustworthy workers. Should the Engineer at any time give notice, in writing, to the Contractor or his duly authorized representative on the work that any employee in his opinion is incompetent, unfaithful, disorderly, careless, unobservant of instructions, or in any way a detriment to the satisfactory progress of the work, such employee shall immediately be dismissed and not again allowed upon the site.

ARTICLE 8.02 SUPERINTENDENCE

The Contractor shall give his personal supervision to the faithful prosecution of the work and in case of his absence shall have a competent, experienced, and reliable supervisor or superintendent, acceptable to the Engineer on the site who shall follow without delay all instructions of the Engineer in the prosecution and completion of the work and every part thereof, in full authority to supply workers, material, and equipment immediately. He shall keep on hand at all times copies of the Contract Documents.

ARTICLE 8.03 EMPLOYMENT OPPORTUNITIES

The Contractor shall, in the performance of the work required to be done under this Contract, employ all workers without discrimination regarding race, creed, color, sex or national origin and must not maintain or provide facilities that are segregated on the basis of race, color, creed or national origin.

ARTICLE 8.04 RATES OF WAGES

On federally assisted projects, the rates of wages to be paid under this Contract shall not be less than the rates of wages set forth in Section 12 of this Agreement.

On other projects, no wage rate determination is included. Florida's Prevailing Wage Law (Section 215.19, Florida Statutes) was repealed effective April 25, 1979.

ARTICLE 8.05 PAYROLL REPORTS

The Contractor and each subcontractor shall, if requested to do so, furnish to the Engineer a duly certified copy of his payroll and also any other information required by the Engineer to satisfy him that the provisions of the law as to the hours of employment and rate of wages are being observed.

Payrolls shall be prepared in accordance with instructions furnished by the City and on approved forms. The Contractor shall not carry on his payroll any persons not employed by him. Subcontractor's employees shall be carried only on the payrolls of the employing subcontractor.

SECTION 9
CONTRACTOR'S DEFAULT

ARTICLE 9.01 CITY'S RIGHT AND NOTICE

It is mutually agreed that: (a) if the Contractor fails to begin work when required to do so, or (b) if at any time during the progress of the work it shall appear to the Engineer that the Contractor is not prosecuting the work with reasonable speed, or is delaying the work unreasonably and unnecessarily, or (c) if the force of workmen or quality or quantity of material furnished are not sufficient to insure completion of the work within the specified time and in accordance with the Specifications hereto attached, or (d) if the Contractor shall fail to make prompt payments for materials or labor or to subcontractors for work performed under the Contract, or (e) if legal proceedings have been instituted by others than the City in such manner as to interfere with the progress of the work and may subject the City to peril of litigation or outside claims of (f) if the Contractor shall be adjudged a bankrupt or make an assignment for the benefit of creditors, or (g) if in any proceeding instituted by or against the Contractor an order shall be made or entered granting an extension of time of payment, composition, adjustment, modification, settlement or satisfaction of his debts or liabilities, or (h) if a receiver or trustee shall be appointed for the Contractor or the Contractor's property, or (i) if the Contract or any part thereof shall be sublet without the consent of the City being first obtained in writing, or (j) if this Contract or any right, monies, or claim thereunder shall be assigned by the Contractor, otherwise than as herein specified, or (k) if the Contractor shall fail in any manner of substance to observe the provisions of this Contract, or (l) if any of the work, machinery, or equipment shall be defective, and shall not be replaced as herein provided, or (m) if the work to be done under this Contract shall be abandoned, then such fact or conditions shall be certified by the Engineer and thereupon the City without prejudice to any other rights or remedies of the City, shall have the right to declare the Contractor in default and so notify the Contractor by a written notice, setting forth the ground or grounds upon which such default is declared and the Contractor must discontinue the work, either as a portion of the work or the whole thereof, as directed.

ARTICLE 9.02 CONTRACTOR'S DUTY UPON DEFAULT

Upon receipt of notice that his Contract is in default, the Contractor shall immediately discontinue all further operations on the work or such part thereof, and shall immediately quit the site or such part thereof, leaving untouched all plant, materials, equipment, tools, and supplies.

ARTICLE 9.03 COMPLETION OF DEFAULTED WORK

The City, after declaring the Contractor in default, may then have the work completed or the defective equipment or machinery replaced or anything else done to complete the work in strict accordance with the Contract Documents by such means and in such manner, by Contract with or without public letting, or otherwise, as it may deem advisable,

utilizing for such purpose without additional cost to the City such of the Contractor's plant, materials, equipment, tools, and supplies remaining on the site, and also such subcontractors as it may deem advisable.

The City shall reimburse all parties, including itself, for the expense of such completion, including liquidated damages, if any, and the cost of reletting. The City shall deduct this expense from monies due or to become due to the Contractor under this Contract, or any part thereof, and in case such expense is more than the sum remaining unpaid of the original contract price, the Contractor and his sureties shall pay the amount of such deficiency to the City.

ARTICLE 9.04 PARTIAL DEFAULT
In case the City shall declare the Contractor in default as to a part of the work only, the Contractor shall discontinue such part, shall continue performing the remainder of the work in strict conformity with the terms of the Contract, and shall in no way hinder or interfere with any other contractor or person whom the City may engage to complete the work as to which the Contractor was declared in default.

SECTION 10
PAYMENTS

ARTICLE 10.01 PRICES
For the Contractor's complete performance of the work, the City will pay and the Contractor agrees to accept, subject to the terms and conditions hereof, the lump sum prices or unit prices in the Contractor's Proposal and the award made therein, plus the amount required to be paid for any extra work ordered under Article 7.02 hereof, less credit for any work omitted pursuant to Article 7.04 hereof. Under unit price items, the number of units actually required to complete the work under the Contract may be more than stated in the Proposal. The Contractor agrees that no claim will be made for any damages or for loss of profits because of a difference between the quantities of the various classes of work assumed and stated in the Proposal Form as a basis for comparing Proposals and the quantities of work actually performed.

The sum as awarded for any lump sum Contract or lump sum Contract Item shall represent payment in full for all of the various classes of work, including materials, equipment, and labor necessary or required to complete, in conformity with the Contract Document, the entire work shown, indicated or specified under the lump sum Contract or lump sum Contract Item.

The amount as awarded as a unit price for any unit price Contact Item shall represent payment in full for all the materials, equipment, and labor necessary to complete, in conformity with the Contract Documents, each unit of work shown, specified, or required under the said unit price Contract Item.

No payment other than the amount as awarded will be made for any class of work included in a lump sum Contract Item or a unit price Contract Item, unless specific provision is made therefor in the Contract Documents.

ARTICLE 10.02 SUBMISSION OF BID BREAKDOWN
Within fifteen (15) days after the execution of this Contract, the Contractor must submit to the Engineer in duplicate an acceptable breakdown of the lump sums and unit prices bid for items of the Contract, showing the various operations to be performed under the Contract, as described in the progress schedule required under Article 4.02 hereof, and the value of each of such operations, the total of such items to equal the total price bid. The Contractor shall also submit such other information relating to the bid prices as may be required and shall revise the bid breakdown as directed. Thereafter, the breakdown may be used for checking the Contractor's applications for partial payments hereunder but shall not be binding upon the City or the Engineer for any purpose whatsoever.

ARTICLE 10.03 REPORTS, RECORDS AND DATA
The Contractor shall furnish to the Engineer such schedules of quantities and costs, progress schedules, reports, invoices, delivery tickets, estimates, records, and other data as the Engineer may request concerning work performed or to be performed and the materials furnished under the Contract.

ARTICLE 10.04 PAYMENTS BY CONTRACTOR
The Contractor shall pay (a) for all transportation and utility services not later than the 20th day of the calendar month following that in which such services are rendered, (b) for all materials, tools, and equipment delivered at the site of the project, and the balance of the cost thereof not later than the 30th day following the completion of that part of the work in or on which such materials, tools, and equipment are incorporated or used, and (c) to each of his subcontractors, not later than the 5th day following each payment to the Contractor, the respective amounts allowed the Contractor on account of the work performed by his subcontractors, to the extent of each subcontractor's interest therein; and proof of such payments or releases therefor shall be submitted to the Engineer upon request.

ARTICLE 10.05 PARTIAL PAYMENTS
On or about the first of each month, the Contractor shall make and certify an estimate, on forms prescribed by the City, of the amount and fair value of the work done, and may apply for partial payment therefor. The Contractor shall revise the estimate as the Engineer may direct. When satisfactory progress has been made, and shows that the value of the work completed since the last payment exceeds one percent (1%) of the total Contract price in amount, the Engineer will issue a certificate that such work has been completed and the value thereof. The City will then issue a voucher to the Contractor in accordance with the following schedule:

FOR CONTRACT AMOUNTS UNDER $250,000
(A)In the amount of ninety percent (90%) of the value of the work completed as certified until construction is one hundred percent (100%) complete (operational or beneficial occupancy), the withheld amount may be reduced below ten percent (10%), at the Engineer's option, to only that amount necessary to assure completion.

FOR CONTRACT AMOUNTS OVER $250,000

(A)In the amount of ninety percent (90%) of the value of the work completed as certified until construction is fifty percent (50%) complete.

(B)When the dollar value, as determined by the Engineer, of satisfactorily completed work in place is greater than fifty percent (50%) of the original contract price, vouchers for partial payment will be issued by the City to the Contractor in the amount of one hundred percent (100%) of the value of the work, above 50%, completed as certified for that payment period.

(C)If the Contractor has performed satisfactorily and the work is substantially complete (operational or beneficial occupancy) the withheld amount may be reduced, at the Engineer's option, to only that amount necessary to assure completion.

In addition to the Conditions set forth in (A), (B), and (C) above, payments will always be less any sums that may be retained or deducted by the City under the terms of any of the contract documents and less any sums that may be retained to cover monetary guarantees for equipment, materials or progress performance.

Payment on estimates made on or about the first of the month may be expected on or about the 20th of the month.

Unless specified otherwise in the Contract Items, the delivered cost of equipment and nonperishable materials suitably stored at the site of the work and tested for adequacy may be included in the Contractor's application for partial payment provided, however, that the Contractor shall furnish evidence satisfactory to the City that the Contractor is the unconditional owner and in possession of such materials or equipment. The amount to be paid will be 90 percent of the invoice cost to the Contractor which cost shall be supported by receipted bills within 30 days of the date of payment by the City to the Contractor. Such payment shall not relieve the Contractor from full responsibility for completion of the work and for protection of such materials and equipment until incorporated in the work in a permanent manner as required by the Contract Documents.

Before any payment will be made under this Contract, the Contractor and every subcontractor, if required, shall deliver to the Engineer a written, verified statement, in satisfactory form, showing in detail all amounts then due and unpaid by such Contractor or subcontractor to all laborers, workmen, and mechanics, employed by him under the Contract for the performance of the work at the site thereof, for daily or weekly wages, or to other persons for materials, equipment, or supplies delivered at the site of the work during the period covered by the payment under consideration.

ARTICLE 10.06 FINAL PAYMENT

Under determination of satisfactory completion of the work under this Contract as provided in Article 4.07 hereof, the Engineer will prepare the final estimate showing the value of the completed work. This estimate will be prepared within 30 days after the date of completion or as soon thereafter as the necessary measurements and computations can be made. All prior certificates and estimates, being approximate only, are subject to correction in the final estimate and payment.

When the final estimate has been prepared and certified by Engineer, he will submit to the Mayor and City Council the final certificate stating that the work has been completed and the amount based on the final estimate remaining due to the Contractor. The City will then accept the work as fully completed and will, not later than 30 days after the final acceptance, as defined in Article 1.02, of the work done under this Contract, pay the Contractor the entire amount so found due thereunder after deduction of all previous payments and all percentages and amounts to be kept and retained under provisions of this Contract; provided, however, and it is understood and agreed that, as a precedent to receiving final payment, the Contractor shall submit to the City a sworn affidavit that all bills for labor, service, materials, and subcontractors have been paid and that there are no suits pending in connection with this work. The City, at its option, may permit the Contractor to execute a separate surety bond in a form satisfactory to the City. The surety bond shall be in the full amount of the suit or suits.

Neither the final payment nor any part of the retained percentage shall be paid until the Contractor, if required, shall furnish the City with a complete release from any should remain unsatisfied after all payments are made, the Contractor shall refund to the City all monies which the City may be compelled to pay in discharging such claim, including incidental costs and attorney's fees.

ARTICLE 10.07 ACCEPTANCE OF FINAL PAYMENT

The acceptance by the Contractor, or by anyone claiming by or through him, of the final payment shall operate as and shall be a release to the City and every officer and agent thereof from any and all claims and liability to the Contractor for anything done or furnished in connection with the work or project and for any act or neglect of the Contractor or of any others relating to or affecting the work. No payment, however, final or otherwise, shall operate to release the Contractor or his sureties from any obligations under this Contract or the Performance Bond.

SECTION 11
MISCELLANEOUS PROVISIONS

ARTICLE 11.01 CONTRACTOR'S WARRANTIES

In consideration of, and to induce the award of this contract to him, the Contractor represents and warrants:

(a)That he is not in arrears to the City upon debt or contract, and he is not a defaulter, as surety, contractor, or otherwise.

(b)That he is financially solvent and sufficiently experienced and competent to perform the work.

(c)That the work can be performed as called for by the Contract Documents.

(d)That the facts stated in his proposal and the information given by him are true and correct in all respects.

(e)That he is fully informed regarding all the conditions affecting the work to be done and labor and materials to be

furnished for the completion of this Contract, and that his information was secured by personal investigation and research.

ARTICLE 11.02 PATENTED DEVICES, MATERIAL AND PROCESSES

It is mutually understood and agreed that Contract prices include all royalties and costs arising from patents, trademarks, and copyrights in any way involved in the work. Whenever the Contractor is required or desires to use any design, device, material, or process covered by letters of patent or copyright, the Contractor shall indemnify and save harmless the City, its officers, agents and employees from any and all claims for infringement by reason of the use of any such patented design, device, tool, material, equipment, or process, to be performed under the Contract, and shall indemnify the said City, its officers, agents, and employees for any costs, expenses, and damages which may be incurred by reason of such infringement at any time during the prosecution or after completion of the work.

ARTICLE 11.03 SUITS AT LAW

In case any action at law or suit in equity may or shall be brought against the City or any of its officers, agents, or employees for or on account of the failure, omission, or neglect of the Contractor or his subcontractors, employees, or agents, to do or perform any of the covenants, acts, matters, or things by this Contract undertaken to be done or performed by the Contractor of his subcontractors, employees, or agents, or from any injuries done to property or persons and caused by the negligence or alleged negligence of the Contractor of his subcontractors, employees, or agents, or in any other manner arising out of the performance of this Contract, then the Contractor shall immediately assume and take charge of the defense of such actions or suits in like manner and to all intents and purposes as if said actions or suits have been brought directly against the Contractor, and the Contractor shall also indemnity and save harmless the City, its officers, agents, and employees from any and all loss, cost or damage whatever arising out of such actions or suits, in like manner and to all intents and purposes as if said actions or suits have been brought directly against the Contractor.

The Contractor shall and does hereby assume all liability for and agrees to indemnify the City or its Engineer against any or all loss, costs, damages, and liability for any or by reason of any lien, claims or demands, either for materials purchased or for work performed by laborers, mechanics, and others and from any damages, costs, actions, or causes of action and judgement arising from injuries sustained by mechanics, laborers, or other persons by reason of accidents or otherwise, whether caused by the carelessness or inefficiency or neglect of said Contractor, his subcontractors, agents, employees, workmen or otherwise.

ARTICLE 11.04 CLAIMS FOR DAMAGES

If the Contractor shall claim compensation for any damage sustained, other than for extra or disputed work covered by Article 7.02 and 7.03 hereof, by reason of any act or omission of the City, its agents, or any persons, he shall, within five days after sustaining such damage, make and deliver to the Engineer a written statement of the nature of the damage sustained and of the basis of the claim against the City. On or before the 15th of the month succeeding that in which any damage shall have been sustained, the Contractor shall make and deliver to the Engineer an itemized statement of the details and amounts of such damage, duly verified by the Contractor. Unless such statements shall be made delivered within the times aforesaid, it is stipulated that and all claims for such compensation shall be forfeited and invalidated, and the Contractor shall not be entitled to payment on account of such claims.

ARTICLE 11.05 NO CLAIMS AGAINST INDIVIDUALS

No claim whatsoever shall be made by the Contractor against any officer, agent, employee of the City for, or on account of, anything done or omitted to be done in connection with this Contract.

ARTICLE 11.06 LIABILITY UNAFFECTED

Nothing herein contained shall in any manner create any liability against the City on behalf of any claim for labor, services, or materials, or of subcontractors, and nothing herein contained shall affect the liability of the Contractor or his sureties to the City or to any workmen or materialsmen upon bond given in connection with this Contract.

ARTICLE 11.07 INDEMNIFICATION PROVISIONS

Whenever there appears in this Agreement, or in the other Contact Documents made a part hereof, an indemnification provision within the purview of Chapter 725.06, Laws of Florida, the monetary limitation on the extent of the indemnification under each such provision shall be One Million Dollars or a sum equal to the total Contract price, whichever shall be the greater.

ARTICLE 11.08 UNLAWFUL PROVISIONS DEEMED STRICKEN

If this contract contains any unlawful provisions not an essential part of the Contract and which shall not appear to have a controlling or material inducement to the making thereof, such provisions shall be deemed of no effect and shall, upon notice by either party, be deemed stricken from the Contract without affecting the binding force of the remainder.

ARTICLE 11.09 LEGAL PROVISIONS DEEMED INCLUDED

Each and every provision of any law and clause required by law to be inserted in this Contract shall be deemed to be inserted herein, and the Contract shall be read and enforced as though it were included herein and if, through mistake or otherwise, any such provision is not inserted or is not correctly inserted, then upon application of either party the Contract shall forthwith be physically amended to make such insertion.

ARTICLE 11.10 DEATH OR INCOMPETENCY OF CONTRACTOR

In the event of death or legal incompetency of a Contractor who shall be an individual or surviving member of a contracting firm, such death or adjudication of incompetency

shall not terminate the Contract, but shall act as default hereunder to the effect provided in Article 9.01 hereof and the estate of the Contractor and his surety shall remain liable hereunder to the same extent as though the Contractor had lived. Notice of default, as provided in Article 9.01 hereof, shall not be required to be given in the event of such death or adjudication of incompetency.

ARTICLE 11.11 NUMBER AND GENDER OF WORDS
Whenever the context so admits or requires, all references herein in one number shall be deemed extended to and including the other number, whether singular or plural, and the use of any gender shall be applicable to all genders.

ARTICLE 11.12 ACCESS TO RECORDS
Representatives of Federal Agencies, if applicable, and the State of Florida shall have access to the work whenever it is in preparation of progress. On federally assisted projects the Federal Agency, the Comptroller General of the United States, or any authorized representative shall have access to any books, documents, papers, and records of the Contractor which are pertinent to the project for the purpose of making audit, examination, excerpts, and transcription thereof.

SECTION 12
LABOR STANDARDS

ARTICLE 12.01 LABOR STANDARDS
The Contractor shall comply with all of the regulations set forth in "Labor Standards Provisions for Federally Assisted Construction Contracts", which may be attached, and any applicable Florida Statutes.

ARTICLE 12.02 NOTICE TO LABOR UNIONS
If required, the Contractor shall provide Labor Unions and other organizations of workers, and shall post, in a conspicuous place available to employees or applicants for employment, a completed copy of the form entitled "Notice to Labor Unions or Other Organizations of Workers" attached to and made a part of this Agreement.

ARTICLE 12.03 SAFETY AND HEALTH REGULATIONS
The Contractor shall comply with the Department of Labor Safety and Health Regulations for construction promulgated under the Occupational Safety and Health Act of 1970 (PL 91- 596) and under Section 107 of the Contract Work Hours and Safety Standards Act (PL 91-54). Nothing in these Acts shall be construed to supersede or in any manner affect any worker's compensation law or statutory rights, duties, or liabilities of employers and employees under any law with respect to injuries, diseases, or death of employees arising out of, or in the course of, employment.

ARTICLE 12.04 EEO AFFIRMATIVE ACTION REQUIREMENTS
The Contractor understands and agrees to be bound by the equal opportunity requirements of Federal regulations which shall be applicable throughout the performance of work under this Contract. The Contractor also agrees to similarly bind contractually each subcontractor. In policies, the Contractor agrees to engage in Affirmative Action directed at promoting and ensuring equal employment opportunity in the work force used under the Contract (and the Contractor agrees to require contractually the same effort of all subcontractors whose subcontractors exceed $100,000). The Contractor understands and agrees that "Affirmative Action" as used herein shall constitute a good faith effort to achieve and maintain minority employment in each trade in the on-site work force used on the Contract.

ARTICLE 12.05 PREVAILING RATES OF WAGES
Florida's prevailing wage law was repealed effective April 25, 1979.

For Federally assisted projects, appropriate prevailing wage rate determinations are indicated on pages beginning with WR-1.

* * * * * * *

IN WITNESS THEREOF, the parties have hereunto set their hands and seals, and such of them as are corporation have caused these present to be signed by their duly authorized officers.

CITY OF TAMPA, FLORIDA

_____
Jane Castor, Mayor
(SEAL)

ATTEST:

_____
City Clerk

Approved as to Form:
The execution of this document was authorized
by Resolution No. _____

_____
Justin R. Vaske, Assistant City Attorney

Contractor

By:_____
(SEAL)

Title:

ATTEST:

_____
Witness

STATE OF)
) SS:
COUNTY OF)

For a Corporation:

STATE OF _____
COUNTY OF _____

The foregoing instrument was acknowledged before me this ___ of _____, 20___ by _____ of _____, a _____ corporation, on behalf of the corporation. He/she is ___ personally known or has ___ produced _____ as identification.

_____
Notary

My Commission Expires:

_____

For an Individual:

STATE OF _____
COUNTY OF _____

The foregoing instrument was acknowledged before me this ___ of _____, 20___ by _____ who is ___ personally known to me or has ___ produced _____ as identification.

_____
Notary

My Commission Expires:

_____

For a Firm:

STATE OF _____
COUNTY OF _____

The foregoing instrument was acknowledged before me this ___ of _____, 20___ by _____ who signed on behalf of the said firm. He/she is ___ personally known or has ___ produced _____ as identification.

_____
Notary

My Commission Expires:

_____

_____

PUBLIC CONSTRUCTION BOND

Bond No. (enter bond number)_____

Name of Contractor:_____

Principal Business Address of Contractor:_____

_____

Telephone Number of Contractor:_____

Name of Surety (if more than one list each):_____

_____

Principal Business Address of Surety:_____

_____

Telephone Number of Surety:_____

Owner is The City of Tampa, Florida

Principal Business Address of Owner: 306 E Jackson St, Tampa, FL 33602

Contract Administration Department (280A4N)

Telephone Number of Owner: 813/274-8456

Contract Number Assigned by City to contract which is the subject of this bond:_____

Legal Description or Address of Property Improved or Contract Number is:_____

_____

_____

_____

General Description of Work and Services:_____

_____

_____

_____

Revised 2016-08-29

KNOW ALL MEN BY THESE PRESENTS That we, _____

_____
(Name of Contractor)

as Principal, hereinafter called CONTRACTOR, of the State of _____, and

_____(Name of Surety)
a corporation organized and existing under and by virtue of the laws of the State of _____, and regularly authorized to do business in the State of Florida, as SURETY, are held and firmly bound unto the City of Tampa, a municipal corporation organized and existing under the laws of the State of Florida, hereinafter called Owner, in the penal sum of _____Dollars and _____Cents ($_____), lawful money of the United States of America, for the payment whereof well and truly to be made, we bind ourselves, our heirs, executors, and administrators, successors and assigns, jointly and severally, firmly by these presents.

THE CONDITION OF THIS BOND is that if Principal:

1. Performs the contract dated _____, _____, 20___, between Principal and Owner for construction of _____, the contract being made a part of this bond by reference, in the time and in the manner prescribed in the contract; and

2. Promptly makes payments to all claimants, as defined in Section 255.05(1) (Section 713.01), Florida Statutes, supplying Principal with labor, materials, or supplies, used directly or indirectly by Principal in the prosecution of the work provided for in the contract; and

3. Pays Owner all losses, damages, expenses, costs, and attorney's fees, including appellate proceedings, that Owner sustains because of a default by Principal under the contract; and

4. Performs the guarantee of all work and materials furnished under the contract for the time specified in the contract, then this bond is void; otherwise it remains in full force.

5. Contractor and Surety acknowledge that the Work for which this bond has been issued may be one of several such contract documents for a group of projects. This bond does not secure covenants to pay for or to perform design services survey or program management services. The Owner/Obligee is expected to reasonably account for damages that are caused to Owner with respect to Principal's (Contractor's) default in performance of the scope of the Work incorporated by reference into the bond, and notwithstanding any contractual or common law remedy permitted to Owner as against Contractor, the obligation of Surety for any damages under this bond shall be determined by the cost of completion of the Work less the contract balance unpaid upon default of Contractor for the Work plus liquidated damages at the rate of $500.00 per day for delays by the Contractor and/or Surety in reaching substantial completion.

6. The notice requirements for claimants and conditions for entitlement to payment set forth in Section 255.05, Fla. Stat. and the limitations period to actions upon Section 255.05, Fla. Stat. bonds apply to claimants seeking payment from surety under this bond. Any action instituted by a claimant under this bond for payment must be in accordance with the notice and time limitation provisions in Section 255.05, Florida Statutes.

7. The Surety, for value received, hereby stipulates and agrees that no changes, extensions of time, alterations or additions to the terms of the contract documents or other Work to be performed hereunder, or the specifications referred to therein shall in any way affect its obligations under this bond, and it does hereby waive notice of any such changes, extensions of time, alterations or additions to the terms of the Contract or to Work or to the specifications.

8. The above SURETY states that it has read all of the Contract Documents made by the CONTRACTOR with the CITY, hereto attached, and the terms and conditions of the contract and work, and is familiar therewith and in particular those portions of the Agreement concerning the guaranty of such CONTRACTOR for a period of one year following the date of the final acceptance of the completed work under the Contract by the CITY, all of which this BOND includes.

DATED ON _____, 20___

_____
(Name of Principal)

_____
(Principal Business Address)

By _____

Title _____

_____
Telephone Number of Principal

_____
(Name of Surety)

_____
(Surety Address)

By _____
(As Attorney in Fact)*

_____
Telephone Number of Surety

Approved as to legal sufficiency:

By _____
Assistant City Attorney

Countersignature:

_____
(Name of Local Agency)

_____
(Address of Resident Agent)

By _____

Title _____

_____
Telephone Number of Local Agency

*(As Attorney in Fact) attach Power of Attorney and Current Certificate with Original Signature

SPECIFICATIONS
GENERAL PROVISIONS

SECTION 1
SCOPE AND INTENT

G-1.01 DESCRIPTION
The work to be done consists of the furnishing of all labor, materials and equipment, and the performance of all work included in this Contract.

G-1.02 WORK INCLUDED
The Contractor shall furnish all labor, superintendence, materials, plant, power, light, heat, fuel, water, tools, appliances, equipment, supplies, and other means of construction necessary or proper for performing and completing the work. He shall obtain and pay for all required permits. He shall perform and complete the work in the manner best calculated to promote rapid construction consistent with safety of life and property and to the satisfaction of the Engineer, and in strict accordance with the Contract Documents. The Contractor shall clean up the work and maintain it during and after construction, until accepted, and shall do all work and pay all costs incidental thereto. He shall repair or restore all structures and property that may be damaged or disturbed during performance of the work.

The cost of incidental work described in these General Provisions, for which there are no specific Contract Items, shall be considered as part of the overhead cost of doing the work and shall be included in the prices for the various Contract Items. No additional payment will be made therefor.

The Contractor shall provide and maintain such modern plant, tools, and equipment as may be necessary, in the opinion of the Engineer, to perform in a satisfactory and acceptable manner all the work required by this Contract. Only equipment of established reputation and proven efficiency shall be used. The Contractor shall be solely responsible for the adequacy of his plant and equipment, prior approval of the Engineer notwithstanding.

G-1.03 PUBLIC UTILITY INSTALLATIONS AND STRUCTURES
Public utility installations and structures shall be understood to include all poles, tracks, pipes, wires, conduits, house service connections, vaults, manholes, and all other appurtenances and facilities pertaining thereto whether owned or controlled by the City, other governmental bodies or privately owned by individuals, firms, or corporations, and used to serve the public with transportation, traffic control, gas, electricity, telephone, sewerage, drainage, water or other public or private property which may be affected by the work.

The Contract Documents contain data relative to existing public utility installations and structures above and below the ground surface. These data are not guaranteed as to their completeness or accuracy and it is the responsibility of the Contractor to make his own investigations to inform himself fully of the character, condition and extent of all such installations and structures as may be encountered and as may affect the construction operations.

The Contractor shall protect all public utility installations and structures from damage during the work. Access across any buried public utility installation or structure shall be made only in such locations and by means approved by the Engineer. The Contractor shall so arrange his operations as to avoid any damage to these facilities. All required protective devices and construction shall be provided by the Contractor at his expense. All existing public utilities damaged by the Contractor which are shown on the Plans or have been located in the field by the utility shall be repaired by the Contractor, at his expense, as directed by the Engineer. No separate payment shall be made for such protection or repairs to public utility installations or structures.

Public utility installations or structures owned or controlled by the City or other governmental body which are shown on the Plans to be removed, relocated, replaced or rebuilt by the Contractor shall be considered as a part of the general cost of doing the work and shall be included in the prices bid for the various Contract Items. No separate payment shall be made therefor.

Where public utility installations or structures owned or controlled by the City or other governmental body are encountered during the course of the work, and are not indicated on the Plans or in the Specifications, and when, in the opinion of the Engineer, removal, relocation, replacement or rebuilding is necessary to complete the work under this Contract, such work shall be accomplished by the utility having jurisdiction or such work may be ordered, in writing by the Engineer, for the Contractor to accomplish. If such work is accomplished by the utility having jurisdiction it will be carried out expeditiously and the Contractor shall give full cooperation to permit the utility to complete the removal, relocation, replacement or rebuilding as required. If such work is accomplished by the Contractor, it will be paid for as extra work as provided for in Article 7.02 of the Agreement.

The Contractor shall, at all times in performance of the work, employ approved methods and exercise reasonable care and skill so as to avoid unnecessary delay, injury, damage or destruction of public utility installations and structures; and shall, at all times in the performance of the work, avoid unnecessary interference with, or interruption of, public utility services, and shall cooperate fully with the owners thereof to that end.

All City and other governmental utility departments and other owners of public utilities, which may be affected by the work, will be informed in writing by the Engineer within two weeks after the execution of the Contract or Contracts covering the work. Such notice will set out, in general, and direct attention to, the responsibilities of the City and other governmental

utility departments and other owners of public utilities for such installations and structures as may be affected by the work and will be accompanied by one set of Plans and Specifications covering the work under such Contract or Contracts.

In addition to the general notice given by the Engineer, the Contractor shall give written notice to all City and other governmental utility departments and other owners of public utilities of the location of his proposed construction operations, at least forty-eight (48) hours in advance of breaking ground in any area or on any unit of the work. This can be accomplished by making the appropriate contact with the "Underground Utility Notification Center for Excavators (Call Candy)".

The maintenance, repair, removal, relocation, or rebuilding of public utility installations and structures, when accomplished by the Contractor as herein provided, shall be done by methods approved by the Engineer.

SECTION 2
PLANS AND SPECIFICATIONS

G-2.01 PLANS
The Plans referred to in the Contract Documents bear the general project name and number as shown in the Notice To Bidders.

When obtaining data and information from the Plans, figures shall be used in preference to scaled dimensions, and large scale drawings in preference to small scale drawings.

G-2.02 COPIES FURNISHED TO CONTRACTOR
After the Contract has been executed, the Contractor will be furnished with five sets of paper prints, the same size as the original drawings, of each sheet of the Plans and five copies of the Specifications. Additional copies of the Plans and Specifications, when requested, may be furnished to the Contractor at cost of reproduction.

The Contractor shall furnish each of the subcontractors, manufacturers, and material suppliers such copies of the Contract Documents as may be required for his work.

G-2.03 SUPPLEMENTARY DRAWINGS
When, in the opinion of the Engineer, it becomes necessary to explain more fully the work to be done or to illustrate the work further or to show any changes which may be required, drawings known as Supplementary Drawings, with specifications pertaining thereto, will be prepared by the Engineer and five paper prints thereof will be given to the Contractor.

The Supplementary Drawings shall be binding upon the Contractor with the same force as the Plans. Where such Supplementary Drawings require either less or more than the estimated quantities of work, credit to the City or compensation therefor to the Contractor shall be subject to the terms of the Agreement.

G-2.04 CONTRACTOR TO CHECK PLANS AND DATA
The Contractor shall verify all dimensions, quantities, and details shown on the Plans, Supplementary Drawings, Schedules, Specifications, or other data received from the Engineer, and shall notify him of all errors, omissions, conflicts, and discrepancies found therein. Failure to discover or correct errors, conflicts or discrepancies shall not relieve the Contractor of full responsibility for unsatisfactory work, faulty construction or improper operation resulting therefrom nor from rectifying such conditions at his own expense. He will not be allowed to take advantage of any errors or omissions as full instructions will be furnished by the Engineer, should such errors or omissions be discovered. All schedules are given for the convenience of the Engineer and the Contractor and are not guaranteed to be complete. The Contractor shall assume all responsibility for the making of estimates of the size, kind, and quality of materials and equipment included in work to be done under the Contract.

G-2.05 SPECIFICATIONS
The specifications consist of four parts, the General Provisions, the Technical Specifications, the Special Provisions and the Contract Items. The General Provisions and Technical Specifications contain general requirements which govern the work. The Special Provisions and the Contract Items modify and supplement these by detailed requirements for the work and shall always govern, whenever there appears to be conflict.

G-2.06 INTENT
All work called for in the Specifications applicable to this Contract, but not shown on the Plans in their present form, or vice versa, shall be of like effect as if shown or mentioned in both. Work not specified in either the Plans or in the Specifications, but involved in carrying out their intent or in the complete and proper execution of the work, is required and shall be performed by the Contractor as though it were specifically delineated or described.

The apparent silence of the Specifications as to any detail, or the apparent omission from them of a detailed description concerning any work to be done and materials to be furnished, shall be regarded as meaning that only the best general practice is to prevail and that only material and workmanship of the best quality is to be used, and interpretation of these Specifications shall be made upon that basis.

SECTION 3
WORKING DRAWINGS

G-3.01 SCOPE
The Contractor shall promptly prepare and submit layout, detail and shop drawings to insure proper construction, assembly, and installation of the work using those materials and methods as hereafter specified under the Technical Specifications, Special Provisions and Contract Items.

These drawings shall accurately and distinctly present the following:

a. All working and erection dimensions.
b. Arrangements and sectional views.
c. Necessary details, including complete information for making connections between work under this Contract and work under other Contracts.
d. Kinds of materials and finishes.
e. Parts listed and description thereof.

Drawings for mechanical equipment shall present, where applicable, such data as dimensions, weight and performance characteristics. These data shall show conformance with the performance characteristics and other criteria incorporated in the Plans and Specifications.

Each drawing shall be dated and shall contain the name of the project, Division number and description, the technical specifications section number, names of equipment or materials and the location at which the equipment or materials are to be installed. Location shall mean both physical location and location relative to other connected or attached material. The Engineer will return unchecked any submittal which does not contain complete data on the work and full information on related matters.

Stock or standard drawings will not be accepted for review unless full identification and supplementary information is shown thereon in ink or typewritten form.

The Contractor shall review all working drawing submittals before transmitting them to the Engineer to determine that they comply with requirements of the Specifications. Drawings which are incomplete or are not in compliance with the Contract Documents shall not be submitted for processing by the Engineer. The Contractor shall place his stamp of approval on all working drawings submitted to the Engineer to indicate compliance with the above.

G-3.02 APPROVAL
If the working drawings show departures from the Contract requirements, the Contractor shall make specific mention thereof in his letter of submittal; otherwise approval of such submittals shall not constitute approval of the departure. Approval of the drawings shall constitute approval of the subject matter thereof only and not of any structure, material, equipment, or apparatus shown or indicated.

The approval of drawings will be general and shall not relieve the Contractor of responsibility for the accuracy of such drawings, nor for the proper fitting and construction of the work, nor for the furnishing of materials or work required by the Contract and not indicated on the drawings. No work called for by working drawings shall be done until such drawings have been approved by the Engineer.

The procedure in seeking approval of the working drawings shall be as follows:

1.The Contractor shall submit four complete sets of drawings and other descriptive data together with one copy of a letter of transmittal to the Engineer for approval. The letter of transmittal shall contain the name of the project, contract number, technical specifications section number, the name of the Contractor, a list of drawings with numbers and titles, and any other pertinent information.

2.Drawings or descriptive data will be stamped "Approved", "Approved Subject to Corrections Marked", or "Examined and Returned for Correction" and one copy with a letter of transmittal will be returned to the Contractor.

3.If a drawing or other data is stamped "Approved", the Contractor shall insert the date of approval on five additional copies of the document and transmit the five copies to the Engineer together with one copy of a letter of transmittal containing substantially the same information as described in Instruction 1. above.

4.If a drawing or other data is stamped "Approved Subject to Corrections Marked", the Contractor shall make the corrections indicated and proceed as in Instruction 3., above.

5.If a drawing or data is stamped "Examined and Returned for Correction", the Contractor shall make the necessary corrections and resubmit the documents as set forth in Instruction 1., above. The letter of transmittal shall indicate that this is a resubmittal.

The Contractor shall revise and resubmit the working drawings as required by the Engineer, until approval thereof is obtained.

SECTION 4
MATERIALS AND EQUIPMENT

G-4.01 GENERAL REQUIREMENTS
All materials, appliances, and types or methods of construction shall be in accordance with the Specifications and shall, in no event, be less than that necessary to conform to the requirements of any applicable laws, ordinances, and codes.

All materials and equipment shall be new, unused, and correctly designed. They shall be of standard first grade quality, produced by expert personnel, and intended for the use for which they are offered. Materials or equipment which, in the opinion of the Engineer, are inferior or of a lower grade than indicated, specified, or required will not be accepted.

The quality of Workmanship and Materials entering into the work under this Contract shall conform to the requirements of the pertinent sections, clauses, paragraphs, and sentences, both directly and indirectly applicable thereto, of that part of the Technical Specifications, whether or not direct reference to such occurs in the Contract Items.

Equipment and appurtenances shall be designed in conformity with ANSI, ASME, IEEE, NEMA and other

generally accepted standards and shall be of rugged construction and of sufficient strength to withstand all stresses which may occur during fabrication, testing, transportation, installation, and all conditions of operation. All bearings and moving parts shall be adequately protected against wear by bushings or other approved means and shall be fully lubricated by readily accessible devices. Details shall be designed for appearance as well as utility. Protruding members, joints, corners, gear covers, and the like, shall be finished in appearance. All exposed welds shall be ground smooth and the corners of structural shapes shall be mitered.

Equipment shall be of the approximate dimensions as indicated on the Plans or as specified, shall fit the spaces shown on the Plans with adequate clearances, and shall be capable of being handled through openings provided in the structure for this purpose. The equipment shall be of such design that piping and electrical connections, ductwork, and auxiliary equipment can be assembled and installed without causing major revisions to the location or arrangement of any of the facilities.

Machinery parts shall conform exactly to the dimensions shown on the working drawings. There shall be no more fitting or adjusting in setting up a machine than is necessary in assembling high grade apparatus of standard design. The equivalent parts of identical machines shall be made interchangeable. All grease lubricating fittings on equipment shall be of a uniform type. All machinery and equipment shall be safeguarded in accordance with the safety codes of the ANSI and applicable state and local codes.

G-4.02 MANUFACTURER

The names of proposed manufacturers, suppliers, material, and dealers who are to furnish materials, fixtures, equipment, appliances or other fittings shall be submitted to the Engineer for approval, as early as possible, to afford proper investigation and checking. Such approval must be obtained before shop drawings will be checked. No manufacturer will be approved for any materials to be furnished under this Contract unless he shall be of good reputation and have a plant of ample capacity. He shall, upon the request of the Engineer, be required to submit evidence that he has manufactured a similar product to the one specified and that it has been previously used for a like purpose for a sufficient length of time to demonstrate its satisfactory performance.

All transactions with the manufacturers or subcontractors shall be through the Contractor, unless the Contractor shall request, in writing to the Engineer, that the manufacturer or subcontractor deal directly with the Engineer. Any such transactions shall not in any way release the Contractor from his full responsibility under this Contract.

Any two or more pieces of material or equipment of the same kind, type or classification, and being used for identical types of service, shall be made by the same manufacturer.

G-4.03 REFERENCE TO STANDARDS

Whenever reference is made to the furnishing of materials or testing thereof to conform to the standards of any technical society, organization or body, it shall be construed to mean the latest standard, code, specification or tentative specification adopted and published at the date of advertisement for proposals, even though reference has been made to an earlier standard, and such standards are made a part hereof to the extent which is indicated or intended.

Reference to a technical society, organization or body may be made in the Specifications by abbreviations, in accordance with the following list:

AASHTO for American Association of State Highway and Transportation Officials (formerly AASHO)
ACI for American Concrete Institute
AGMA for American Gear Manufacturer's Association
AFBMA for Anti-Friction Bearing Manufacturer's Association
AISC for American Institute of Steel Construction
AISI for American Iron and Steel Institute
ANSI for American National Standards Institute
ASCE for American Society of Civil Engineers
ASTM for American Society for Testing and Materials
ASME for American Society of Mechanical Engineers
AWS for American Welding Society
AWWA for American Water Works Association
AWPA for American Wood Preservers Association
CEMA for Conveyor Equipment Manufacturers Association
CIPRA for Cast Iron Pipe Research Association
IEEE for Institute of Electrical and Electronic Engineers
IPCEA for Insulated Power Cable Engineers Association
NEC for National Electrical Code
NEMA for National Electrical Manufacturers Association
SAE for Society of Automotive Engineers
SHBI for Steel Heating Boiler Institute
Fed.Spec. for Federal Specifications
Navy Spec. for Navy Department Specifications
U.L.,Inc. for Underwriters' Laboratories, Inc.

When no reference is made to a code, standard or specification, the Standard Specifications of the ANSI, the ASME, the ASTM, the IEEE, or the NEMA shall govern.

G-4.04 SAMPLES

The Contractor shall, when required, submit to the Engineer for approval typical samples of materials and equipment. The samples shall be properly identified by tags and shall be submitted sufficiently in advance of the time when they are to be incorporated into the work, so that rejections thereof will not cause delay. A letter of transmittal, in duplicate, from the Contractor requesting approval must accompany all such samples.

G-4.05 EQUIVALENT QUALITY

Whenever, in the Contract Documents, an article, material, apparatus, equipment, or process is called for by trade name or by the name of a patentee, manufacturer, or dealer or by reference to catalogs of a manufacturer or dealer, it shall be understood as intending to mean and specify the article, material, apparatus, equipment or process designated, or any

equal thereto in quality, finish, design, efficiency, and durability and equally serviceable for the purposes for which it is intended.

Whenever material or equipment is submitted for approval as being equal to that specified, the decision as to whether or not such material or equipment is equal to that specified shall be made by the Engineer.

Upon rejection of any material or equipment submitted as the equivalent of that specifically named in the Contract, the Contractor shall immediately proceed to furnish the designated material or equipment.

Neither the approval by the Engineer of alternate material or equipment as being equivalent to that specified nor the furnishing of the material or equipment specified, shall in any way relieve the Contractor of responsibility for failure of the material or equipment, due to faulty design, material, or workmanship, to perform the functions required of them by the Specifications.

G-4.06 DELIVERY

The Contractor shall deliver materials in ample quantities to insure the most speedy and uninterrupted progress of the work so as to complete thw work within the allotted time. The Contractor shall also coordinate deliveries in order to avoid a delay in, or impediment of, the progress of the work of any related Contractor.

G-4.07 CARE AND PROTECTION

The Contractor shall be solely responsible for properly storing and protecting all materials, equipment, and work furnished under the Contract from the time such materials and equipment are delivered at the site of the work until final acceptance thereof. He shall, at all times, take necessary precautions to prevent injury or damage by water, freezing, or by inclemencies of the weather to such materials, equipment and work. All injury or damage to materials, equipment, or work resulting from any cause whatsoever shall be made good by the Contractor.

The Engineer shall, in all cases, determine the portion of the site to be used by the Contractor for storage, plant or for other purposes. If, however, it becomes necessary to remove and restack materials to avoid impeding the progress of any part of the work or interference with the work to be done by any other Contractor, the Contractor shall remove and restack such materials at his own expense.

G-4.08 TOOLS AND ACCESSORIES

The Contractor shall, unless otherwise stated in the Contract Documents, furnish with each type, kind or size of equipment, one complete set of suitably marked high grade special tools and appliances which may be needed to adjust, operate, maintain, or repair the equipment. Such tools and appliances shall be furnished in approved painted steel cases, properly labeled and equipped with good grade cylinder locks and duplicate keys.

Spare parts shall be furnished as specified.

Each piece of equipment shall be provided with a substantial nameplate, securely fastened in place and clearly inscribed with the manufacturer's name, year of manufacture, serial number, weight and principal rating data.

G-4.09 INSTALLATION OF EQUIPMENT

The Contractor shall have on hand sufficient proper equipment and machinery of ample capacity to facilitate the work and to handle all emergencies normally encountered in work of this character.

Equipment shall be erected in a neat and workmanlike manner on the foundations at the locations and elevations shown on the Plans, unless directed otherwise by the Engineer during installation. All equipment shall be correctly aligned, leveled and adjusted for satisfactory operation and shall be installed so that proper and necessary connections can be made readily between the various units.

The Contractor shall furnish, install and protect all necessary anchor and attachment bolts and all other appurtenances needed for the installation of the devices included in the equipment specified. Anchor bolts shall be as approved by the Engineer and made of ample size and strength for the purpose intended. Substantial templates and working drawings for installation shall be furnished.

The Contractor shall, at his own expense, furnish all materials and labor for, and shall properly bed in non-shrink grout, each piece of equipment on its supporting base that rests on masonry foundations. Grout shall completely fill the space between the equipment base and the foundation.

G-4.10 OPERATING INSTRUCTIONS

The Contractor, through qualified individuals, shall adequately instruct designated employees of the City in the operation and care of all equipment installed hereunder, except for equipment that may be furnished by the City.

The Contractor shall also furnish and deliver to the Engineer three complete sets for permanent files, identified in accordance with Subsection G-3.01 hereof, of instructions, technical bulletins and any other printed matter, such as diagrams, prints or drawings, containing full information required for the proper operation, maintenance, and repair, of the equipment installed and the ordering of spare parts, except for equipment that may be furnished by the City.

In addition to the above three copies, the Contractor shall furnish any additional copies that may be required for use during construction and start-up operations.

G-4.11 SERVICE OF MANUFACTURER'S ENGINEER

The Contract prices for equipment shall include the cost of furnishing a competent and experienced engineer or superintendent who shall represent the manufacturer and shall assist the Contractor, when required, to install, adjust, test and place in operation the equipment in conformity with the Contract Documents. After the equipment is placed in

permanent operation by the City, such engineer or superintendent shall make all adjustments and tests required by the Engineer to provide that such equipment is in proper and satisfactory operating condition, and shall instruct such personnel as may be designated by the City in the proper operation and maintenance of such equipment.

SECTION 5
INSPECTION AND TESTING

G-5.01 GENERAL
The Contractor's attention is hereby directed to Article 3.03 of the Agreement.

Inspection and testing of materials will be performed by the City unless otherwise specified.

For tests specified to be made by the Contractor, the testing personnel shall make the necessary inspections and tests and the reports thereof shall be in such form as will facilitate checking to determine compliance with the Contract Documents. Five copies of the reports shall be submitted and authoritative certification thereof must be furnished to the Engineer as a prerequisite for the acceptance of any material or equipment.

If, in the making of any test of any material or equipment, it is ascertained by the Engineer that the material or equipment does not comply with the Contract, the Contractor will be notified thereof and he will be directed to refrain from delivering said material and equipment, or to remove it promptly from the site or from the work and replace it with acceptable material, without cost to the City.

Tests of electrical and mechanical equipment and appliances shall be conducted in accordance with recognized test codes of the ANSI, ASME, or the IEEE, except as may otherwise be stated herein.

The Contractor shall be fully responsible for the proper operation of equipment during tests and instruction periods and shall neither have nor make any claim for damage which may occur to equipment prior to the time when the City formally takes over the operation thereof.

G-5.02 COSTS
All inspection and testing of materials furnished under this Contract will be performed by the City or duly authorized inspection engineers or inspection bureaus without cost to the Contractor, unless otherwise expressly specified.

The cost of shop and field tests of equipment and of certain other tests specifically called for in the Contract Documents shall be borne by the Contractor and such costs shall be deemed to be included in the contract price.

Materials and equipment submitted by the Contractor as the equivalent to those specifically named in the Contract may be tested by the City for compliance. The Contractor shall reimburse the City for the expenditures incurred in making such tests on materials and equipment which are rejected for noncompliance.

G-5.03 INSPECTIONS OF MATERIALS
The Contractor shall give notice, in writing to the Engineer, sufficiently in advance of his intention to commence the manufacture or preparation of materials especially manufactured or prepared for use in or as part of the permanent construction. Such notice shall contain a request for inspection, the date of commencement and the expected date of completion of the manufacture or preparation of materials. Upon receipt of such notice the Engineer will arrange to have a representative present at such times during the manufacture as may be necessary to inspect the materials or he will notify the Contractor that inspection will be made at a point other than the point of manufacture, or he will notify the Contractor that inspection will be waived. The Contractor must comply with these provisions before shipping any material. Such inspection shall not release the Contractor from the responsibility for furnishing materials meeting the requirements of the Contract Documents.

G-5.04 CERTIFICATE OF MANUFACTURE
When inspection is waived or when the Engineer so requires, the Contractor shall furnish to him authoritative evidence in the form of Certificates of Manufacture that the materials to be used in the work have been manufactured and tested in conformity with the Contract Documents. These certificates shall be notarized and shall include copies of the results of physical tests and chemical analyses, where necessary, that have been made directly on the product or on similar products of the manufacturer.

G-5.05 SHOP TESTS OF OPERATING EQUIPMENT
Each piece of equipment for which pressure, duty, capacity, rating, efficiency, performance, function, or special requirements are specified shall be tested in the shop of the maker in a manner which shall conclusively prove that its characteristics comply fully with the requirements of the Contract Documents. No such equipment shall be shipped to the work until the Engineer notifies the Contractor, in writing, that the results of such tests are acceptable.

Five copies of the manufacturer's actual test data and interpreted results thereof, accompanied by a certificate of authenticity sworn to by a responsible official of the manufacturing company, shall be forwarded to the Engineer for approval.

The cost of the shop tests and of furnishing manufacturer's preliminary and shop test data of operating equipment shall be borne by the Contractor.

G-5.06 PRELIMINARY FIELD TESTS
As soon as conditions permit, the Contractor shall furnish all labor, materials, and instruments and shall make preliminary field tests of equipment. If the preliminary field tests disclose any equipment furnished under this Contract which does not comply with the requirements of the Contract Documents, the Contractor shall, prior to the acceptance tests, make all changes, adjustments, and replacements required.

G-5.07 FINAL FIELD TESTS
Upon completion of the work and prior to final payment, all equipment and appliances installed under this Contract shall be subjected to acceptance tests as specified or required to prove compliance with the Contract Documents.

The Contractor shall furnish labor, fuel, energy, water and all other materials, equipment, and instruments necessary for all acceptance tests, at no additional cost to the City.

G-5.08 FAILURE OF TESTS
Any defects in the materials and equipment or their failure to meet the tests, guarantees or requirements of the Contract Documents shall be promptly corrected by the Contractor by replacements or otherwise. The decision of the Engineer as to whether or not the Contractor has fulfilled his obligations under the Contract shall be final and conclusive. If the Contractor fails to make those corrections or if the improved materials and equipment, when tested, shall again fail to meet the guarantees or specified requirements, the City, notwithstanding its partial payment for work, and materials and equipment, may reject the materials and equipment and may order the Contractor to remove them from the site at his own expense.

In case the City rejects any materials and equipment, then the Contractor shall replace the rejected materials and equipment within a reasonable time. If he fails to do so, the City may, after the expiration of a period of thirty calendar days after giving him notice in writing, proceed to replace such rejected materials and equipment, and the cost thereof shall be deducted from any compensation due or which may become due the Contractor under this Contract.

The City agrees to obtain other equipment within a reasonable time and the Contractor agrees that the City may use the equipment furnished by him without rental or other charges until the new equipment is obtained.

Materials or work in place that fails to pass acceptability tests shall be retested at the direction of the construction engineer all such retests shall be at the Contractor's expense. The rates charged shall be in accordance with the Department of Public Works current annual inspection contract which is available for inspection at the offices of the Department of Public Works.

G-5.09 FINAL INSPECTION
The procedures for final inspection shall be in accordance with the provisions of Article 4.07 of the Agreement. During such final inspections, the work shall be clean and free from water. In no case will the final estimate be prepared until the Contractor has complied with all the requirements set forth and the Engineer has made his final inspection of the entire work and is satisfied that the entire work is properly and satisfactorily cosntructed in accordance with the requirements of the Contract Documents.

SECTION 6

TEMPORARY STRUCTURES

G-6.01 GENERAL
All false work, scaffolding, ladders, hoistways, braces, pumping plants, shields, trestles, roadways, sheeting, centering forms, barricades, drains, flumes, and the like, any of which may be needed in the construction of any part of the work and which are not herein described or specified in detail, must be furnished, maintained and removed by the Contractor, and he shall be responsible for the safety and efficiency of such works and for any damages that may result from their failure or from their improper construction, maintenance, or operation.

G-6.02 PUBLIC ACCESS
At all points in the work where public access to any building, house, place of business, public road, or sidewalk would be obstructed by any action of the Contractor in executing the work required by this Contract, the Contractor shall provide such temporary structure, bridges or roadway as may be necessary to maintain public access at all times. At least one lane for vehicular traffic shall be maintained in streets in which the Contractor is working. Street closure permits are required from the Department of Public Works.

The Contractor shall provide suitable temporary bridges, as directed by the Engineer, at street intersections when necessary for the maintenance of vehicular and pedestrian traffic.

Prior to temporarily cutting of access to driveways and garages, the Contractor shall give twelve (12) hours notice to affected property owners. Interruptions to use of private driveways shall be kept to a minimum.

G-6.03 CONTRACTOR'S FIELD OFFICE
The Contractor shall erect, furnish and maintain a field office with a telephone at the site during the entire period of construction. He or an authorized agent shall be present at this office at all times while his work is in progress. Readily accessible copies of both the Contract Documents and the latest approved working drawings shall be kept at this field office.

G-6.04 TEMPORARY FENCE
If, during the course of the work, it is necessary to remove or disturb any fence or part thereof, the Contractor shall, at his own expense, if so ordered by the Engineer, provide a suitable temporary fence which shall be maintained until the permanent fence is replaced. The Engineer shall be solely responsible for the determination of the necessity for providing a temporary fence and the type of temporary fence to be used.

G-6.05 RESPONSIBILITY FOR TEMPORARY STRUCTURES
In accepting the Contract, the Contractor assumes full responsibility for the sufficiency and safety of all temporary structures or work and for any damage which may result from their failure or their improper construction, maintenance, or operation and will indemnify and save harmless the City from

all claims, suits or actions and damages or costs of every description arising by reason of failure to comply with the above provisions.

SECTION 7
TEMPORARY SERVICES

G-7.01 WATER
The Contractor shall provide the necessary water supply at his own expense. He shall, if necessary, provide and lay necessary waterlines from existing mains to the place of using, shall secure all necessary permits and pay for all taps to water mains or hydrants and for all water used at the established rates.

G-7.02 LIGHT AND POWER
The Contractor shall provide, at his own expense, temporary lighting and power facilities required for the proper prosecution and inspection of the work. If, in the opinion of the Engineer, these facilities are inadequate, the Contractor will not be permitted to proceed with any portion of the work affected thereby.

G-7.03 SANITARY REGULATIONS
The Contractor shall prohibit and prevent the committing of nuisances on the site of the work or on adjoining property and shall discharge any employee who violates this rule.

Ample washrooms and toilet facilities and a drinking water supply shall be furnished and maintained in strict conformity with the law by the Contractor for use by his employees.

G-7.04 ACCIDENT PREVENTION
Precautions shall be exercised at all times for the protection of persons and property. The safety provisions of applicable laws, building and construction codes shall be observed. The Contractor shall comply with the U. S. Department of Labor Safety and Health Regulations for construction promulgated under the Occupational Safety and Health Act of 1970 (PL 91-596), and under Section 107 of the Contract Work. Hours and Safety Standards Act (PL 91-54), except where state and local safety standards exceed the federal requirements and except where state safety standards have been approved by the Secretary of Labor in accordance with provisions of the Occupational Safety and Health Act.

G-7.05 FIRST AID
The Contractor shall keep upon the site, at each location where work is in progress, a completely equipped first aid kit and shall provide ready access thereto at all times when men are employed on the work.

G-7.06 HEATING
The Contractor shall provide temporary heat, at his own expense, whenever required on account of work being carried on during cold weather and to prevent freezing of water pipes and other damage to the work.

SECTION 8

LINES AND GRADES

G-8.01 GENERAL
All work done under this Contract shall be constructed in accordance with the lines and grades shown on the Plans, or as given by the Engineer. The full responsibility for keeping alignment and grade shall rest upon the Contractor.

The Engineer will establish bench marks and base line controlling points. Reference remarks for lines and grades as the work progresses will be located to cause as little inconvenience to the prosecution of the work as possible. The Contractor shall so place excavation and other materials as to cause no inconvenience in the use of the use of the reference marks provided. He shall remove any obstructions placed by him contrary to this provision.

G-8.02 SURVEYS
The Contractor shall furnish and maintain, at his own expense, stakes and other such materials, and give such assistance, including qualified helpers, as may be required by the Engineer for setting reference marks. The Contractor shall check such reference marks by such means as he may deem necessary and, before using them, shall call the Engineer's attention to any inaccuracies. The Contractor shall, at his own expense, establish all working or construction lines and grades as required from the reference marks set by the Engineer, and shall be solely responsible for the accuracy thereof. He shall, however, be subject to the check and review of the Engineer.

The Contractor shall keep the Engineer informed a reasonable time in advance as to his need for line and grade reference marks, in order that they may be furnished and all necessary measurements made for record and payment with the minimum of inconvenience to the Engineer or of delay to the Contractor.

It is the intention not to delay the work for the establishment of reference marks but, when necessary, working operations shall be suspended for such reasonable time as the Engineer may require for this purpose.

G-8.03 SAFEGUARDING MARKS
The Contractor shall safeguard all points, stakes, grade marks, monuments and bench marks made or established on the work, bear the cost of reestablishing them if disturbed, and bear the entire expense of rectifying work improperly installed due to not maintaining or protecting or to removing without authorization such established points, stakes and marks.

The Contractor shall safeguard all existing and known property corners, monuments and marks adjacent to but not related to the work and, if required, shall bear the cost of reestablishing them if disturbed or destroyed.

G-8.04 DATUM PLANE
All elevations indicated or specified refer to the Mean Sea Level Datum of the U.S.C. & G.S. (N.O.S.) which is 0.80 feet above the Mean Low Water Datum of the U. S. Army

Corps of Engineers.

SECTION 9
ADJACENT STRUCTURES AND LANDSCAPING

G-9.01 RESPONSIBILITY
The responsibility for removal, replacement, relocation, repair, rebuilding or protection of all public utility installations, including poles, tracks, pipes, wires, conduits, house service connections, vaults, manholes, sewers, traffic control and fire alarm signal circuit installations and other appurtenances and facilities shall be in accordance with G-1.02 and G-1.03.

The Contractor shall also be entirely responsible and liable for all damage or injury as a result of his operations to all other adjacent public and private property, structures of any kind and appurtenances thereto met with during the progress of the work. The cost of protection, replacement in their original locations and conditions or payment of damages for injuries to such adjacent public and private property and structures affected by the work, whether or not shown on the Plans, and the removal, relocation, and reconstruction of such items called for on the Plans or specified shall be included in the various Contract Items and no separate payment will be made therefor. Where such public and private property, structures of any kind and appurtenances thereto are not shown on the Plans and when, in the opinion of the Engineer, removal or relocation and reconstruction is necessary to avoid interference with the work, payment therefor will be made as provided for extra work in Article 7.02 of the Agreement.

G-9.02 PROTECTION OF TREES
All trees and shrubs shall be adequately protected by the Contractor with boxes or otherwise and, within the City of Tampa, in accordance with ordinances governing the protection of trees. No excavated materials shall be placed so as to injure such trees or shrubs. Trees or shrubs destroyed by negligence of the Contractor or his employees shall be replaced by him with new stock of similar size and age, at the proper season, and at the sole expense of the Contractor.

Beneath trees or other surface structures, where possible, pipelines may be built in short tunnels, backfilled with excavated materials, except as otherwise specified, or the trees or structures carefully supported and protected from damage.

The City may order the Contractor, for the convenience of the City, to remove trees along the line of trench excavation. If so ordered, the City will obtain any permits required for removal of trees. Such tree removal ordered shall be paid for under the appropriate Contract Items.

G-9.03 LAWN AREAS
Lawn areas shall be left in as good condition as before the starting of the work. Where sod is to be removed, it shall be carefully removed and later replaced, or the area where sod has been removed shall be restored with new sod in the manner described in the Technical Specifications section.

G-9.04 RESTORATION OF FENCES
Any fence, or part thereof, that is damaged or removed during the course of the work shall be replaced or repaired by the Contractor and shall be left in as good a condition as before the starting of the work. The manner in which the fence is repaired or replaced and the materials used in such work shall be subject to the approval of the Engineer. The cost of all labor, materials, equipment, and work for the replacement or repair of any fence shall be deemed included in the appropriate Contract Item or Items, or if no specific Item is provided therefor, as part of the overhead cost of the work, and no additional payment will be made therefor.

SECTION 10
PROTECTION OF WORK AND PUBLIC

G-10.01 TRAFFIC REGULATIONS
The Contractor shall arrange his work to comply with Article G-6.02. The work shall be done with the least possible inconvenience to the public and to that end the work may be confined by the Engineer to one block at a time.

G-10.02 BARRIERS AND LIGHTS
During the prosecution of the work, the Contractor shall put up and maintain at all times such barriers, and lights, as will effectually prevent accidents. The Contractor shall provide suitable barricades, red lights, "danger" or "caution" or "street closed" signs and watchmen at all places where the work causes obstructions to the normal traffic or constitutes in any way a hazard to the public. Such barriers and signs shall be constructed to State of Florida Department of Transportation standards and placed as recommended by the Traffic Division of the City's Department of Public Works.

No open fires will be permitted.

G-10.03 SMOKE PREVENTIONS
The Contractor shall use hard coal, coke, oil or gas as fuel for equipment generating steam. A strict compliance with ordinances regulating the production and emission of smoke will be required.

G-10.04 NOISE
The Contractor shall eliminate noise to as great an extent as practicable at all times. Air compressing plants shall be equipped with silencers and the exhaust of all gasoline motors or other power equipment shall be provided with mufflers. In the vicinity of hospitals and schools, special care shall be used to avoid noise or other nuisances. The Contractor shall strictly observe all local regulations and ordinances covering noise control.

Except in the event of an emergency, no work shall be done between the hours of 7:00 p.m. and 7:00 a.m., or on Sundays. If the proper and efficient prosecution of the work requires operations during the night, the written permission of the Engineer shall be obtained before starting such items of the work.

G-10.05 ACCESS TO PUBLIC SERVICES
Neither the materials excavated nor the materials or plant used in the construction of the work shall be so placed as to prevent free access to all fire hydrants, valves or manholes.

G-10.06 DUST PREVENTION
The Contractor shall prevent dust nuisance from his operations or from traffic by keeping the streets sprinkled with water at all times.

G-10.07 PRIVATE PROPERTY
The Contractor shall so conduct the work that no equipment, material, or debris will be placed or allowed to fall upon private property in the vicinity of the work unless he shall have obtained the owner's written consent thereto and shall have shown this consent to the Engineer.

SECTION 11
SLEEVES AND INSERTS

G-11.01 COORDINATION
When the Contract requires the placing of conduits, saddles, boxes, cabinets, sleeves, inserts, foundation bolts, anchors, and other like work in floors, roofs, or walls of buildings and structures, they shall be promptly installed in conformity with the construction program. The Contractor who erects the floors, roofs, and walls shall facilitate such work by fully cooperating with the Contractors responsible for installing such appurtenances. The Contractor responsible for installing such appurtenances shall arrange the work in strict conformity with the construction schedule and avoid interference with the work of other contractors.

G-11.02 OPENINGS TO BE PROVIDED
In the event timely delivery of sleeves and other materials cannot be made and to avoid delay, the affected Contractor may arrange to have boxes or other forms set at the locations where the appurtenances are to pass through or into the floors, roofs, walls, or other work. Upon the subsequent installation of these appurtenances, the Contractor erecting the structure shall fill around them with materials as required by the Contract. The necessary expenditures incurred for the boxing out and filling in shall be borne by the Contractor or Contractors required to furnish the sleeves and inserts. Formed openings and later installation of sleeves will not be permitted at locations subject to hydrostatic pressure.

SECTION 12
CUTTING AND PATCHING

G-12.01 GENERAL
The Contractor shall do all cutting, fitting, or patching of his portion of the work that may be required to make the several parts thereof join and coordinate in a manner satisfactory to the Engineer and in accordance with the Plans and Specifications. The work must be done by competent workmen skilled in the trade required by the restoration.

SECTION 13
CLEANING

G-13.01 DURING CONSTRUCTION
During construction of the work, the Contractor shall, at all times, keep the site of the work and adjacent premises as free from material, debris, and rubbish as is practicable and shall remove the same from any portion of the site if, in the opinion of the Engineer, such material, debris, or rubbish constitutes a nuisance or is objectionable.

The Contractor shall remove from the site all of his surplus materials and temporary structures when no further need therefor develops.

G-13.02 FINAL CLEANING
At the conclusion of the work, all erection plant, tools, temporary structures and materials belonging to the Contractor shall be promptly taken away, and he shall remove and promptly dispose of all water, dirt, rubbish or any other foreign substances.

The Contractor shall thoroughly clean all equipment and materials installed by him and shall deliver such materials and equipment undamaged in a bright, clean, polished, and new appearing condition.

SECTION 14
MISCELLANEOUS

G-14.01 PROTECTION AGAINST SILTATION AND BANK EROSION
The Contractor shall arrange his operations to minimize siltation and bank erosion on construction sites and on existing or proposed watercourses and drainage ditches.

G-14.02 EXISTING FACILITIES
The work shall be so conducted to maintain existing facilities in operation insofar as is possible. Work shall be scheduled to minimize bypassing during construction. Requirements and schedules of operations for maintaining existing facilities in service during construction shall be as described in the Special Provisions.

G-14.03 USE OF CHEMICALS
All chemicals used during project construction or furnished for project operation, whether herbicide, pesticide, disinfectant, polymer, reactant or of other classification, must show approval of either EPA or USDA. Use of all such chemicals and disposal of residues shall be in strict conformance with instructions.

* * * * * * *

SPECIFIC PROVISIONS

SP-1 Scope

The work included under these Contract Documents comprises the repair and restoration of existing box culverts along with all miscellaneous and appurtenant work. Locations, descriptions and plans are not known or developed at present, but will be known and developed prior to the issuance of Work Orders for each project..

The work will be authorized by the issuance of several individual Work Orders during the length of this contract and will consist of furnishing, constructing, installing, testing and maintaining said box culverts, pipes, and structures complete and in place until work under said Work Order is accepted by the City.

Prior to the issuance of each Work Order, the Contractor and Engineer shall review the plans and the site to mutually agree upon a Time of Completion and scope of work for the Work Order. That Work Order Time of Completion shall be used to calculate any Liquated Damages if warranted.

The Contractor and Engineer shall also mutually determine if any necessary items are not included within the Proposal and if so negotiate a price for said item(s).

SP-2. Permits

The City will obtain permits required from any State or County agencies having jurisdiction over the roadways and for any railroad or highway crossings shown on the plans. The Contractor shall be required to comply with all provisions of such permits regarding workmanship, schedules, maintenance of traffic, notification of starting construction, pavement removal and replacement and other conditions under which the permit is issued.

The Contractor shall obtain all permits required to comply with SP-22 Maintenance of Traffic, contained herein. Right-of-way and maintenance of traffic permit fees shall be paid by the Contractor and be reimbursed by the City.

The Contractor shall have in his possession the proper license to perform the work before submittal of his bid and shall obtain and pay for all other licenses and authorizations required for the prosecution of the work, including the cost of all work performed in compliance with the terms and conditions of such permits, licenses and authorizations, whether by himself or others.

The Contractor shall require all subcontractors to be currently licensed by the City to perform the proposed work in their respective fields. All work shall be performed in accordance with the licenses, permits and the requirements of the current regulations applicable to the work.

SP-3 Intent

Stormwater facilities work not specified in either the Plans or in the Specifications, but involved in carrying out their intent or in the complete and proper execution of the work, is required and shall be performed by the Contractor in accordance with the City of Tampa Stormwater Technical Standards or Florida Department of Transportation Standard Specifications for Road and Bridge Construction, as though it were specifically delineated or described. The cost of this work shall be included in the cost of the pay item to which it is incidental, and no additional payment will be made therefor.

SP-4 Working Drawings

Prior to performing any work requiring working drawings, as specified on the Plans and in the Workmanship and Materials Sections, the Contractor shall submit the working drawings in accordance with the General Provisions section headed "Working Drawings."

SP-5 Environmental Protection

The Contractor will be held liable for the violation of any and all environmental regulations. Violation citations carry civil penalties and in the event of willful violation, criminal penalties. The fact that the permits are issued to the City does not relieve the Contractor in any way of his environmental obligations and responsibilities.

SP-6 Use of Explosives

Explosives will not be used on the work except when authorized by the Engineer. The use of same, if authorized, shall conform to laws or ordinances which may pertain to the use of same and the utmost care will be exercised by the Contractor so as not to endanger life or property. The Contractor will assume full responsibility in connection with use of any explosives even though authorized. Explosives will not be stored within the City limits.

SP-7 Construction Start

Construction will not begin prior to receipt by the City of the required permits or until all necessary equipment and materials are on-site. If issuance of the Notice to Proceed is delayed due to permit acquisition, the Time of Completion will be extended to suit, but no extra payment will be made to the Contractor.

SP-8 Coordination and Cooperation

In performing work under this Contract, the Contractor shall coordinate its work with that of any adjacent contractors for the City, and others, and cooperate with them in every reasonable way, to the end that there shall be the minimum practicable interference with their operations.

SP-9 Connections Between Construction

The Contractor shall provide an approved type masonry bulkhead, spigot plug, bell cap, or standard pipe plug in the sewer, manhole, junction chamber, pipe stub or other location to provide for terminating construction when the work is performed in phases and the connecting phase is not complete.

The Contractor shall remove any such bulkhead or plug encountered when connecting to previously completed work.

The cost of furnishing and removing bulkheads and plugs shall be included in the various classified unit price Contract Items for culvert pipes, or in the total Lump Sum Price, as applicable, and no separate payment will be made therefor.

SP-10 Construction Easements

It is expected that all the construction activities will occur within the existing Rights-of-Way and/or easements. In the event the Engineer determines that a temporary construction easement is necessary, the City will obtain such temporary construction easement. Any items necessary to restore the temporary construction easement to its initial condition that is not established in the contract will be negotiated with the contractor prior to the start of construction.

In the event that, in the opinion of the Contractor (and not the Engineer), obtaining a temporary construction easement is desirable, it shall be the sole responsibility of the Contractor to obtain such easements from the Owner of the property. If such easements are obtained by the Contractor, they shall contain provisions to hold the City harmless from any operations of the Contractor within the easement limits. All costs to restore this easement to its initial condition shall be borne by the Contractor. The Contractor shall not conduct construction operations on private property outside the limits of any easement obtained by the City or of any Rights-of-Way unless a copy of the temporary construction easement agreement is filed with the Engineer.

SP-11 Releasing Facilities for Use

It is the intent of these Specifications that all newly constructed sewers and appurtenant facilities be placed in service as rapidly as an integrated portion of the facilities can be constructed, inspected and accepted by the Engineer. Acceptance or use by the City of any portion of the facilities prior to final acceptance shall not relieve the Contractor of any responsibilities, regarding such facilities, included in the Contract.

SP-12 Material and Equipment Approval

The Contractor shall not enter into any subcontracts, or place any order, for the furnishing of any material or equipment until he has received the Engineer's written approval of the manufacturers.

SP-13 Contractor Emergency Response Time

The Contractor must be available to service emergency calls seven (7) days a week, twenty-four (24) hours a day after the Notice to Proceed/Work Order has been issued and the Contractor is mobilized and on site. The response time for emergency calls shall be within two (2) hours. A contact person and telephone number shall be provided to the Engineer for such purposes.

SP-14 Contractor's Field Office

Delete Article G-6.03 Contractor's Field Office from GENERAL PROVISIONS. The Contractor or an authorized agent shall be present at all times while his work is in progress. Readily accessible copies of both the contract documents and the latest approved working drawings shall be kept at the job site.

SP-15 Salvage

All existing pipe and appurtenances removed by the Contractor and which are not designated to be salvaged shall become the property of the Contractor and shall be removed from the site of the work to the Contractor's own place of disposal.

Items which are shown on the Plans or specified to be salvaged shall be removed by the Contractor, delivered, and unloaded at a location, as directed by the Engineer. The cost of removing, disposing, delivering, and unloading as salvage items of pipe and appurtenances shall be included in the various classified unit price Contract Items or in the total Lump Sum Price, as applicable, and no separate payment will be made therefor.

SP-16 Sequence of Operations

The Contractor shall develop with the Engineer a complete schedule of operations which, in the opinion of the Engineer, will permit use of the facility at the earliest possible date.

Taking over of parts of the work for operation before completion of the entire project shall not relieve the Contractor of any responsibility for proper integrated operations of all parts of the work, nor shall it act to relieve him of any responsibilities under Article A-6.04 of the Agreement, for guaranty of all parts of the work, for one year after the date of acceptance of all the work on the project.

SP-17 Dewatering

Dewatering is the responsibility of the Contractor. All costs associated with dewatering shall be included in the appropriate contract price for items to which dewatering is incidental, or in the total Lump Sum Price, as applicable, and no separate payment shall be made therefor.

Before commencing any excavation at the site of the work, the Contractor shall submit to the Engineer and obtain his approval of the methods and equipment and arrangement of facilities proposed for the removal and disposal of water at the site and of all water entering any excavation or other part of the work from any source whatsoever. Adequate standby facilities shall be

provided to ensure that the excavation will be kept dry in the event of power failure or mechanical breakdown. Facilities for removal and disposal of water shall be of sufficient capacity to keep the excavation dry under all circumstances with one-half of the facilities out of service. If well points are used, provision shall be made for removing and resetting individual well points without taking the system of which they are a part out of service.

SP-18 Prevention, Control and Abatement of Erosion and Water Pollution

The Contractor shall be responsible for prevention, control and abatement of erosion, siltation and water pollution resulting from construction of the project until final acceptance of the project.

The Contractor shall provide, install, construct, and maintain any covering, mulching, sodding, sand bagging, berms, slope drains, sedimentation structures, or other devices necessary to meet City, County, State and Federal regulatory agency codes, rules and laws.

The Contractor shall take sufficient precautions to prevent pollution of streams, canals, lakes, reservoirs and other water impoundments with fuels, oils, bitumen, calcium chloride or other harmful materials. Also, the Contractor shall conduct and schedule its operations so as to avoid or otherwise minimize pollution or siltation of such streams, and the like, and to avoid interference with movement of migratory fish. No residue from the concrete repairs, surface preparations, or other construction activities shall be allowed to discharge into the river, bay, or other bodies of water. Silt and turbidity barriers and other approved methods of trapping sediment and residues shall be installed and maintained for the duration of the construction project.

Storm drainage facilities, both open and closed conduit, serving the construction area shall be protected by the Contractor from pollutant and contaminants. If the Engineer determines that siltation of drainage facilities has resulted due to the project, the Engineer will advise the Contractor to remove and properly dispose of the deposited material. Should the Contractor fail to or elect not to remove the deposits, the City will provide maintenance cleaning as needed and will charge all costs of such service against the amount of money due or to become due the Contractor.

Construction operations in rivers, channels, streams, tidal waters, canals and other impoundments shall be restricted to those areas where it is necessary to perform filling or excavation to accomplish the work shown in the Plans and to those areas which must be entered to construct temporary or permanent structures. As soon as conditions permit, rivers, channels, streams and impoundments shall be promptly cleared of all obstructions placed therein or caused by construction operations.

Except as necessary for construction, excavated materials shall not be deposited in rivers, streams, canals or impoundments, or in a position close enough thereto to be washed away by high water or runoff.

The Contractor shall not disturb lands or waters outside the limits of construction except as may be found necessary and authorized by the Engineer.

The Contractor shall schedule his operations such that the area of unprotected erodible earth exposed at any one time is not larger than the minimum area necessary for efficient construction operations; and the duration of exposed, uncompleted construction to the elements shall be as short as practicable.

The Engineer may limit the surface areas of unprotected erodible earth exposed by clearing and grubbing, excavation or filling operations and may direct the Contractor to provide immediate erosion or pollution control measures to prevent siltation or contamination of any river, stream, channel, tidal waters, reservoir, canal or other impoundment or to prevent damage to the project or property outside the project right of way.

SP-19 Project Sign

When noted on the Work Order, the Contractor shall furnish a project sign as shown on the detail included herein, and install it in the construction area as directed by the Engineer within five (5) days of receiving the Work Order.

The cost of fabrication, erection, maintenance, removal, and proper disposal of the project sign at the completion of the

project, including all labor and materials shall be as per the contract price.

Because the work orders issued are expected to be of relative short duration, should any of the names on the sign change, the Contractor will not be required to change the sign.

SP-20 Construction Operations

In City streets, excavated materials shall, where practicable, be deposited upon streets, sidewalks, driveways, or other paved surfaces within the street right-of-way, except that interruptions to the use of driveways shall be kept to a minimum. The Contractor shall clean up areas from which soil has been removed at the end of each day by sweeping, washing, or other approved methods. When the work is halted by rain, the Contractor shall clean up the working areas before leaving the site.

Trenches shall be protected at the close of each day's operations by lighted barricades, fences, and other methods to the satisfaction of the Engineer. Fences shall meet OSHA standards and be structurally stable as approved by the Engineer. No excavations shall be left open over a weekend.

In general, pipes shall be laid in opencut, except when another method, such as jacking, augering or tunneling is shown on the Plans, specified or ordered.

In City, State and County highways, excavated materials shall not be stored or cast upon the pavement, unless an advance approval of the governing agency is first obtained by the Contractor.

SP-21 Project Cleanup

Cleanup is extremely important and the Contractor will be responsible for keeping the construction site, including the work area within the box culvert, neat and clean during construction. Debris shall be removed regularly as the work progresses and when rainy weather is anticipated to prevent the discharge of sediment and debris to a body of water.

SP-22 Maintenance of Traffic

The Contractor shall arrange his work so that there will be as little disruption of traffic as possible.

At least seventy-two hours before starting any work in City, County or FDOT rights-of-way, the Contractor shall obtain the appropriate permit for any traffic lane or street closure. The permit will establish the requirements for closures related to the number of lanes and time of day lanes or streets may be closed. If the Contractor proposes a complete street closure, a detailed traffic detour plan may be required by the appropriate agency together with the application for the Street Closure Permit. The traffic detour plan shall include proposed detour routes and locations and descriptions of direction signs for the construction area and detour routes. Two approved copies of all Street Closure Permits shall be submitted to the Engineer before starting any work. No changes to the approved Street/Lane Closure Permit will be permitted without prior approval by the City.

The Contractor shall furnish and maintain all necessary signs, barricades, lights and flagmen necessary to control traffic and provide for safety to the public, all in compliance with the Florida Department of Transportation "Manual on Traffic Controls and Safe Practices for Street and Highway Construction, Maintenance and Utility Operations," with subsequent revisions and additions, and to the satisfaction of the Engineer.

The cost of traffic maintenance shall be included under the various maintenance of traffic Contract Items unit price and no additional payment will be made therefor. The cost of traffic maintenance for unusual circumstances shall be negotiated with the Contractor prior to the start of construction.

SP-23 Work in Streets and Highways

All work within streets and highways shall be subject to the regulations and requirements of the appropriate agencies. Within the City of Tampa, streets and highways are under the jurisdiction of the City of Tampa, Department of Public Works or Florida Department of Transportation. Outside the City of Tampa, streets and highways are under the jurisdiction of the County of

Hillsborough or the Florida Department of Transportation.

Methods and materials of construction used in restoration within such streets and highways, including pavement, sidewalk, curb, curb and gutter removal and replacement, replacement of storm sewerage facilities, excavation and backfilling, and the storage of plant, materials and equipment shall conform to the requirements of the City of Tampa and, where applicable, the County of Hillsborough or Florida Department of Transportation, and will be subject to the inspection and approval of the duly authorized representatives of the City, County and the State.

SP-24 Surface Restoration

Where construction activities are conducted in existing grassed areas, the grassed areas shall be restored as specified or directed by sodding or grassing. Such restoration of grassed areas shall conform to the requirements of the Workmanship and Materials section headed "Lawn Replacement."

The Contractor shall replace or repair all ground surfaces damaged during construction. Any bushes, flowers, gardens, patios, or other landscaping and irrigation systems disturbed by the construction project shall be repaired or replaced by the Contractor. The cost of such ground surface repair shall be included in the various classified unit price Contract Items, or in the total Lump Sum Price, as applicable, and no separate payment will be made therefor.

SP-25 Existing Public Facilities

Existing public facilities that are removed by construction operations under this contract shall be replaced by the Contractor to City of Tampa specifications. These items shall include all public benches, playground light poles, shelters, roadway signs, and replacement of these items shall be considered incidental to the cost of construction, and no separate payment will be made therefor.

SP-26 Work Adjacent to Utilities

Existing utilities including house services adjacent to or crossing the line of the work shall be protected as shown on the Plans, specified herein, and in accordance with the requirements of the General Provisions.

SP-27 Utility Protection Considerations

The Contractor shall protect all utilities and other facilities within and adjacent to the construction as covered in Section G-1.03 Public Utility Installations and Structures from GENERAL PROVISIONS, unless a utility firm has conclusively indicated, or such is shown on the Plans, that the certain adjustment, removal, reconstruction, or protection of the utility's facility will be performed by that respective utility.

The Contractor shall furnish, install, and remove sheeting and shoring and other protective measures as may be necessary to satisfactorily accomplish the construction of this project. The cost of such sheeting and shoring and other protective measures shall be included in the unit prices as bid for the storm or sanitary sewer pipe items, and no separate payment shall be made therefor.

SP-28 Conflict Structure

Where a sanitary sewer line runs through a conflict structure, the portion of sanitary sewer spanning the structure shall be PVC encased in a steel sleeve. The annular space between the PVC pipe and the steel sleeve shall be sealed at each end as shown in the plans and contract documents.

When a water main is carried through a conflict structure, the water line shall be encased in a steel sleeve. The diameter of the sleeve pipe shall be such as to allow about one inch (1") minimum clearance all around the existing water main (including the bell ends).

The cost of replacement of the sanitary sewer or water main will include all PVC pipe, steel pipe, and all appurtenant material as required by the Engineer and will be negotiated prior to issuance of Work Order.

SP-29 Short Tunnels

Sewers or force mains shall be constructed in short tunnels when determined necessary by the Engineer to protect trees, shrubs, and existing surface or subsurface utilities and structures. Short tunnels shall be constructed to the lengths specified and directed in writing by the Engineer. Separate payment for short tunnels will not be made, but shall be included in the Contract Unit Price for which the short tunnel is incidental.

SP-30 Protection of Trees and Shrubs

It is expected that all the construction activities will occur within the existing Rights-of-Way and/or easements.

Protective barricades shall be placed around all protected trees and grand trees as determined by the Natural Resources Division of Planning and Development Department and shall remain in place until all potentially damaging construction activities are completed (see attached barricade detail). The Natural Resources Division must inspect the site after tree protection devices have been installed and prior to construction. A 48-hour notice must be given to Natural Resources to schedule the inspection. No excavated or backfill material shall be placed in a manner which, in the opinion of the Engineer, may result in damage to trees or shrubs

In areas where the construction might be in close proximity to existing trees and /or shrubs, the Contractor shall limit his trench width by using a trench/drag box. The allowable width of the construction area around existing trees and/or shrubs shall be as per the detail for sheeted (trench/drag box) trench plus three (3) feet for a working area, to either side of the sheeted trench.

The Contractor shall provide the services of an approved licensed tree professional when it is necessary to trim or cut a significant branch from a tree. The Contractor shall also provide the services of an approved licensed tree professional when it is necessary to root prune close to any existing tree when shown on the plans or ordered in writing by the Engineer.

The cost to remove and/or replace any trees that are removed from within the described construction area, the cost of any protective barricade prescribed by the Natural Resources Division, the cost to trim branches and the cost of root pruning shall be paid by the City after being negotiated prior to the start of construction.

The Contractor shall replace all trees or shrubs which are destroyed or damaged to such extent, in the opinion of the Engineer, to be considered destroyed that are located outside the limit of the described construction area, at its own expense. Replacement of destroyed trees or shrubs shall be made with new stock conforming to the requirements of the City's Tree Ordinance.

SP-31 Existing Stormwater Facilities

In the course of the work, it may be necessary to install the pipeline under or closely adjacent to existing culverts and other stormwater facilities. The Contractor shall protect all existing stormwater facilities which are shown on the Plans or located in the field during the course of the work. When approved by the Engineer, relocation or special maintenance of stormwater facilities during construction will be permitted. Disruption of service shall be kept to a minimum.

Facilities which are damaged due to the work method of the Contractor shall be replaced by the Contractor to such limits as directed by the Engineer. Materials used for such replacements shall be similar to those used in the existing facility and shall conform to City Standards for the construction of storm sewers for work done in the City of Tampa. Work done outside the City shall conform to the Florida Department of Transportation "Manual of Uniform Minimum Standards for Design, Construction, and Maintenance of Streets and Highways."

The maintenance and guarantee provisions of the Agreement shall also apply to all replacements of damaged or relocated stormwater facilities accomplished by the Contractor.

The cost of protecting, replacing, relocating and maintaining stormwater facilities shall be included in the various classified unit price Contract Items, or in the total Lump Sum Price, as applicable, and no separate payment will be made therefor, unless otherwise specified in other Contract Items.

SP-32 Work in Private Property

Where portions of the work are constructed in easements through private properties, the limits of such City-owned easements are as shown on the Plans.

Upon completion of work in City-owned easements, the Contractor shall restore the property, including all fences or other structures disturbed by his operations, as nearly as possible to the condition prior to construction. No material shall be used or removed from private property without the approval of the Engineer.

The Contractor shall confine his operation in such private properties within the limits of the easements as shown or directed by the Engineer.

The Contractor shall further comply with all provisions of the grants of the City-owned easement and shall assume full responsibility as the agent of the City for all obligations of the City under such grants of easement in connection with the construction of pipelines.

The Contractor shall not enter upon or occupy any private land outside of the limits of the City-owned easement unless a copy of the written consent of the Owner is filed with the Engineer. The Contractor shall conduct his operations along easements through private property so as not to damage the property and to interfere with its ordinary use as little as possible.

SP-33 Fences

Temporary fences, where required, shall be "wood and wire fence" or other suitable fencing as approved by the Engineer.

Permanent fences shall be restored by the Contractor and shall be finished and installed so that the restoration is equal to the original. Only those portions of original fencing, or materials therefrom, that the Engineer approved for reuse shall be used by the Contractor in fence restoration. All other materials, including lumber, paint, creosote, concrete and metal products, shall be furnished by the Contractor.

The cost of temporary fences and permanent fence restoration shall be negotiate prior to issuance of a Work Order.

SP-34 Data to be Submitted on Pipe

Within ten days after the date the Contractor is issued Work Order Notice to Proceed and prior to his entering into any subcontract for the manufacture or purchase of any pipe, the Contractor shall submit to the Engineer, in an amount equal to four (4) sets to be retained by the City plus the number of sets desired by the Contractor, the following information:

1. The name and address of the pipe manufacturer and the location of the plant at which the pipe will be manufactured.

2. A general description of and specifications for the pipe and pipe joints proposed.

3. Notarized certificates of manufacture for VCP, PVC, HDPE, and DIP stating conformance to applicable standards and specifications.

4. Any additional information that the Engineer may deem necessary in order to evaluate the qualifications of the manufacturer and to determine the suitability of the proposed pipe to meet the requirements of the Contract Documents.

   The Contractor shall not enter into any subcontract for the furnishing of pipe until he has received the Engineer's approval, in writing, of the proposed manufacturer and pipe.

All pipe of specified classes and materials shall be of one kind and shall be produced by a single manufacturer.

SP-35 Inspection of Reinforced Concrete Pipe

All reinforced concrete pipe, reinforced concrete arch culverts, storm drain, and sewer pipe, and all reinforced concrete elliptical pipe shall be inspected and accepted by a testing laboratory approved by the Engineer.

Each pipe shall bear the stamp of acceptance of the testing laboratory and the Engineer shall be supplied with a copy of each inspection report, including a certification of "D-load," absorption test, conformance to the dimensional requirements, and all other designations of ASTM specifications. The cost of such inspection services shall be included in the unit prices for the respective pipe items.

Unless specified otherwise on the Plans, or directed by the Engineer, all storm sewer pipes shall be ASTM Class III, B wall thickness.

Prior to the manufacture of any reinforced concrete sewer pipe, details of the steel reinforcing and concrete strength together with proof of the adequacy of the pipe design for each size and class of pipe shall be submitted to the Engineer for approval.

As proof that the design of the pipe meets the 0.01-inch crack and ultimate load strength requirements for this class of pipe, the manufacturer shall submit the results of properly certified three-edge-bearing tests already witnessed and verified by an approved independent testing laboratory on identical pipe of identical design or, if such three-edge-bearing test results are not already available or are not acceptable, shall have one pipe, at least four feet in length, tested in three-edge-bearing and witnessed and verified by an approved independent testing laboratory and shall submit certified test results. All costs associated with proof-of-design tests shall be borne by the Contractor.

Concrete sewer pipe shall be tested in accordance with the applicable provisions of ASTM Des: C 497 as required by the ASTM Specification for the pipe.

The basis of acceptance for reinforced concrete pipe shall be in accordance with Section 5.1.1 of ASTM Des: C 76 (round pipe) or ASTM Des: C 507 (elliptical pipe). During manufacture, at least one pipe section shall be shop tested to destruction in three-edge-bearing in the presence of an approved independent testing laboratory for each 1,000 feet of pipe or fraction thereof made. The test pipe sections shall be a minimum of four feet in length. The manufacturer shall have a pipe casting form, of the same inside diameter as the pipe being manufactured, together with the proper reinforcing steel cages, available at all times during manufacture for the purpose of casting test pipes at the times designated by the Engineer. Test pipe sections shall not be lined with plastic sheet. No pipe shall be tested at an age of less than 12 days, and no pipe shall be delivered to the job site until satisfactory completion of shop tests on representative pipe specimens for each 1,000-foot lot of pipe manufactured. Proof-of-design tests performed on pipe manufactured for this Contract will be accepted by the City in lieu of shop tests for the first 1,000-foot lot of pipe of each size and class manufactured. This test must be within one (1) year of shipment for each size and class of pipe.

The basis for acceptance of nonreinforced concrete pipe shall be in accordance with Section 4.1 of ASTM Des: C 14.

The Contractor shall obtain, review and submit to the Engineer four (4) copies of certified test reports made by the City's inspection engineer. All costs associated with shop testing shall be borne by the Contractor.

SP-36 Elliptical Concrete Pipe and Round Concrete Pipe Joints

All joints in elliptical concrete pipe and round R.C.P. shall be provided with filter fabric or concrete jacket as per D.O.T Standard Index No. 280 and as directed by the Engineer. Filter fabric shall be provided at all joints, except the last two joints not supported by a structure; these joints shall be provided with a concrete collar.

The cost of the filter fabric jackets and concrete collars shall be included in the unit cost of pipe. No extra payment will be

paid for such jackets or collars.

SP-37 Concrete Requirements

All concrete work shall comply with FDOT Section 346, except Section 346.6.1 and other applicable sections regarding reinforced steel and site preparation.

SP-38 Sand-Cement Riprap Bags

Bags made from synthetic fiber or material shall not be used on this project. The preferred bag material is jute or paper.

SP-39 Standard for Filter Fabric

Unless specified otherwise on the Plans, filter fabric shall be nonwoven fabric per D.O.T. Specification Sections 514 and 985. Payment for furnishing and placing the filter fabric shall be included in the contract price for the item or items to which it is incidental.

SP-40 Measurement for Payment

The quantity, in linear feet, to be measured for payment under the various classified unit price Contract Items for pipelines in opencut, or in the total Lump Sum Price, as applicable, shall be the actual length of new pipelines placed in the work, as shown, specified and directed. Depth of cut for sanitary sewers shall be measured from the original ground surface to the pipe invert. Pipelines will be measured along the centerline of the pipe as follows:

1. The measured length of gravity sanitary sewers, regardless of pipe material, will include all fittings, short tunnels and manholes with no deductions for wyes, tees and the width of manholes. Deductions in the measured length of gravity sanitary sewers will be made for the width of structures, such as junction boxes, measured from the outside face to the outside face of the structure walls, plus one foot.

2. The measured length for sanitary or stormwater force mains will include all fittings and short tunnels with deductions for the laid length of valves.

3. Deductions in the measured length of storm sewers will be made for the width of all structures, including manholes and inlets, measured from the inside wall to the inside wall of the structure.

SP-41 Filling Abandoned Pipes

The Contractor shall pump a lean mixture of grout into pipes as shown on the Plans and as directed by the Engineer.

The grout shall be a mixture of fly ash and cement, the ratio of which shall be submitted to the Engineer for approval. The air-entraining admixture shall be permitted per FDOT Section 346. The grouting shall be carried out by pumps.

This work shall be carried out after the proposed sanitary sewer or storm sewer is functioning.

The Contractor shall take measures to ensure the pipe is completely filled with the grout. Such measures may consist of constructing temporary stand pipes, grout injection tubes, or other measures approved by the Engineer and as directed in the Workmanship and Materials section. The Contractor shall also construct approved plugs into the ends of the abandoned sewers. All costs to construct the plugs, stand pipes, grout injection tubes (or other approved measures), and any other necessary steps to provide for a complete item shall be included in the unit cost of the grout, and no additional payment shall be made therefor.

SP-42 Temporary Pavement Restoration

No portion of the work shall be left more than fourteen (14) days without temporary pavement surface; however, the

Engineer may require that temporary pavement surface be installed sooner to ensure that no more than one-thousand (1,000) linear feet of road be open at one time. Payments on installed pipe of up to fifty percent (50%) of the unit price can be retained by the Engineer until a crushed concrete or limerock base material along with a sand seal temporary pavement surface is provided. The Engineer can restrict further installation of pipe if satisfactory and on-going street restoration is not performed by the Contractor. Temporary work shall be maintained in a suitable and safe condition for traffic until the permanent pavement is laid, or until final acceptance of the work.

SP-43 Sequence of Evaluation and Survey of Box Culvert

For any of the Work Orders, the Contractor shall follow the sequence of steps below to evaluate and survey the box culverts prior to initiating repairs:

1. Box Culvert shall be hydraulically cleaned and debris removed from the bottom.
2. Contractor shall then pressure wash the inside of the culvert.
3. A set of stations, marked on the wall, shall be established with a maximum interval of 100 feet. These stations shall be oriented from a starting point agreed upon by Contractor and Engineer and shall remain until repair work is determined complete. All features and points of repair shall be referenced to these stations. Markings on the wall shall be visible on all video inspections and referenced in written reports.
4. An initial walk-thru will be conducted by the Contractor and Engineer to approximate extent of repairs and an estimate of cost determined with a contingency. At each repair location, the suggested repair method, location, and estimated limits shall be marked on the culvert.
5. Contractor shall conduct a video inspection of the culvert documenting location of proposed repairs and marked baseline. Contractor shall reference the approximate station on the baseline for the start of the video inspection and all repair locations.
6. Contractor shall proceed with repairs agreed upon and additional warranted repairs, so long as total costs do not exceed estimate, including contingency. Any additional repairs, which would exceed the amount of the estimate plus contingency, shall be approved by the Engineer prior to executing the repair.
7. Once Contractor determines the repairs are complete, a second walk-thru will be conducted with a City representative to verify appropriate repairs were done and in all locations.
8. Once the culvert repairs are acceptable by the Engineer, Contractor shall video inspect the culvert to document the repairs.
9. 120 days after the repairs were determined complete by the Engineer, another walk-thru will take place to determine the effectiveness of the repairs, and any problems previously repaired that show evidence of weeping or infiltration, shall be repaired in accordance with the specifications and at the expense of the Contractor.

The cost of the establishing and maintaining the baseline will be included in the Mobilization or other Contract Items. No separate Contract Item will be provided for this cost.

SP-44 City Testing

Pursuant to Section 960 Structural Repair Specifications and Details, the Contractor is responsible for all testing designated for each repair method. The cost of this testing should be included in the Contract Unit Price for each item. The initial testing required for work under the designated Contingent Items – for example pipe or structure construction – will be provided by the city of Tampa at no cost to the contractor. The cost of retesting materials and/or workmanship, which has been initially tested by the City and found to be unacceptable, is to be borne by the Contractor.

SP-45 Street Pavement Base and Asphalt Surface Replacement

All pavement base and asphalt surfaces shall comply with the City of Tampa, Transportation Technical Standards and "PAVEMENT/RIGHT OF WAY RESTORATION REQUIREMENTS", Concrete Base restoration or Full Depth Asphalt SP12.5 and SP-9.5.

SP-46 Temporary Bulkheads

At the ends of construction sections, where isolation of a work area is necessary, temporary bulkheads, approved by the Engineer, shall be built. Such bulkheads encountered in box culvert included those installed under this Contract, or structures previously repaired, shall be removed by the Contractor when the need for them has passed or when ordered by the Engineer.

SP-47 Reserved Parking Signs in Parking Meter Areas

The Contractor shall reimburse the Department of Public Works, Parking Division located at 107 N. Franklin Street, Tampa, Florida 33602 for any and all metered parking spaces occupied or made unusable or unavailable as a result of construction activity by the Contractor. Private automobiles may not be parked in any reserved space.

In order to receive temporary or permanent reserved signs in parking areas which are regulated by parking meters, there shall first be paid to the Parking Revenue Fund for the elimination of each such meter a charge based on the schedules enforce during the Work Order time frame.

SP-48 Monthly Schedules

In addition to the Progress Schedule required in Article 4.02 of the Agreement, the Contractor shall submit a monthly schedule with each pay estimate. Pay estimates will not be processed unless accompanied by an updated monthly schedule. The schedule shall include the following components, if applicable:

1. Maintenance of Traffic
2. Mobilization
3. Inspections and video documentation
4. External Repairs
5. Internal Repairs
6. Bypass Pumping
7. Pavement Restoration
8. Site Cleanup

SP-49 Contingent Items

Contract Items in the Proposal marked with an asterisk (*) are contingent. These items may or may not be used.

Contingent Contract Items that have an established unit price by the City or a unit bid price established by the Contractor will be the unit price the City will pay the Contractor should it become necessary to use more or less of the stated quantities.

SP-50 Replacement of Traffic Markings and Signalization Loops

The Contractor shall furnish all labor, equipment and materials to replace, test and maintain all traffic markings (temporary and permanent) and signalization loops removed or damaged by pipeline construction and appurtenant work as shown on the Plans, specified and directed by the Engineer.

The replacement of traffic markings (temporary and permanent), signalization loops and all appurtenant work shall be replaced by the Contractor in kind.

It shall be the Contractor's responsibility to field verify before construction begins all markings and signalization loops to be replaced.

All traffic markings and signalization loops shall conform to the Workmanship and Materials standards set forth in the latest edition of the Florida Department of Transportation Standard and Supplemental Specifications.

Payment for the replacement of temporary and permanent traffic markings, signalization loops and all appurtenant work shall be negotiated with Engineer for each Work Order and prior to start of construction.

SP-51 Bypass Pumping

Maintaining stormwater flow during all phases of construction is the responsibility of the Contractor. The Contractor shall review the plans, phasing, and the construction schedule to determine the need for bypassing to suit the sequence of operations. The bypass operation must provide continuous service. If so directed by the Engineer, the Contractor will provide around-the-clock monitoring to ensure continuous operation and service. To further ensure that no interruptions occur, the Contractor must have adequate back-up pumps on site at all times. The number of back-up pumps shall conform to the following chart:

OPERATING BYPASS PUMPS	REQUIRED BACK-UP PUMPS
1-3	1
4-6	2
7-9	3

The hydraulic design of the bypass system shall be the sole responsibility of the Contractor. All pumps shall be of a type suitable for pumping stormwater over an indefinite period without clogging or requiring shutdown for routine maintenance. The Contractor shall submit a complete plan for his bypass system including, but not limited to, pump size and type, pump flow characteristics, and piping size, type, and diameter. All pumps shall be properly secured to avoid damage/vandalism/unauthorized shutdown and baffled to comply with all noise abatement standards. The costs of bypass pumping shall be negotiated with Engineer for each Work Order and prior to start of construction.

SP-52 Request for Information and Shop Drawings

Contractor shall prepare and submit up to four (4) hardcopies and one (1) bookmarked, unsecured electronic post document format (PDF) file for all Submittals, RFI, and Shop Drawings. The City will review the submittals and return one (1) hardcopy and PDF file of the marked up submittal to the contractor. The contractor shall have approved hard copies of all submittals at the job site. Each electronic submission must be in a high resolution color format and shall be original electronic documents from the manufacturer. Hardcopies shall be high quality printed in color. Scanned printouts or poor quality resolution PDF files will not be accepted.

SP-53 Work Directive Change

A Work Directive Change is a written directive to the Contractor, issued on or after the date of the execution of the Agreement, and signed by the Engineer on behalf of the City, ordering an addition, deletion or revision in the work, or responding to an emergency. A Work Directive Change will not change the contract price or the time for completion, but is evidence that the parties expect that the change directed or documented by an Authorization to Proceed with Extra Work letter will be incorporated in a subsequently issued Change Order following negotiations by the parties as to its effect, if any, on the contract price or the time for completion.

Without invalidating the Agreement, additions, deletions or revisions in the work may, at any time or from time to time, be authorized by a Change Order or a Work Directive Change. Upon receipt of any such document, the Contractor shall promptly proceed with the work involved.

SP-54 Protection of Water Service Lines

The Contractor shall protect all water service lines, including those which are to be replaced, in order to minimize interruption of service to the customer. If the Contractor damages a service line which is shown on the plans, is in line with a meter box, or that has been marked in the field, then he shall immediately replace the service line per Tampa Water Department (T.W.D.) specifications from main to meter including curb stop, making all connections, and all appurtenant work required to restore service.

The Engineer shall determine which lines, if any, are to be replaced due to damage caused by the Contractor, and no separate payment shall be made therefor.

SP-55 Storage of Materials

The Contractor may not use that portion of the right-of-way located between the existing/proposed curb lines or existing/proposed edges of pavement to store pipe, structures, materials, surplus excavated fill, or equipment other than that used for excavating or dewatering. The Contractor may use that portion of the right-of-way behind the existing or proposed curb line or off the edge of pavement for storage provided that this use does not obstruct pedestrian or vehicular traffic and conforms to the City's Tree Ordinance. If the area behind the curb line/off the edge of pavement is insufficient in size to accommodate the Contractor's storage needs, the Contractor is required to secure the use of a vacant parcel of land for use as a storage site for the duration of this project. Upon completion of the project, all storage areas will be restored to a condition which meets or exceeds the pre-construction condition of the storage area. Payment for use and restoration of storage areas will be included in the appropriate lump sum pay items and unless the area is within the pipeline pay limits, no separate payment will be made therefor.

SP-56 Temporary Stockpiling

For temporary stockpiling of the excavated material within project limits (and anywhere within City limits), the Contractor shall follow the following procedure:

Public Right-of-Way

a. The Contractor will not be allowed to stockpile suitable, excavated material within right-of-way for a period in excess of 30 calendar days. Unsuitable excavated material shall not be stockpiled within public right-of-way for a period in excess of 7 calendar days.

Location other than Public Right-of-way

b. The Contractor shall:

1) Obtain the permission (in writing) from the owner of the property where stockpiling is desired.

2) At Contractor's own expense present the above letter and a contour plan of the site to the Engineer for approval of the stockpiling site.

The time periods of stockpiling shall be specified by the Contractor in writing.

Upon removal of stockpiled material, the Contractor shall clean up and grade the site to its original contours and conditions.

The City of Tampa shall not be a party to the agreement between the Contractor and the property owner.

Regardless of the location of stockpiling, it shall be the Contractor's responsibility to make sure that stockpiling in no way constitutes a public hazard or nuisance and does not interfere with the natural surface runoff in the area

SP-57 Temporary Work Stoppages

The Contractor shall temporarily discontinue all construction activities from, and including, Thanksgiving Day through the following Sunday, and December 24 through January 2.

Prior to temporary work stoppages, all streets shall be restored to permit access to all businesses and residences and to allow ingress and egress by local traffic only. The Contractor shall maintain all streets at this condition level for the duration of the shutdown period.

All equipment, except that used for excavation and well pointing, and all materials including, but not limited to, manhole structures, pipe, and stockpiled material shall be removed to either the Contractor's storage lot or to a location outside the project area as approved by the Engineer.

The Contractor will also be required to accommodate the annual Gasparilla Parade and Gasparilla Run by ceasing construction activities and providing ingress and egress to allow local traffic only. The time limits for these requirements shall be, unless determined otherwise, from one day before to one day after the Gasparilla Parade and the Gasparilla Run. Accommodation of these events will entail restoration of all streets to at least a sand seal coat of crushed concrete or limerock base. All equipment, except that used for excavation and well pointing, and all materials including, but not limited to, manhole structures, pipe, and stockpiled material shall be removed to either the Contractor's storage lot or to a location outside the project area as approved by the Engineer.

All costs associated with furnishing labor, equipment, temporary pavement restoration, demobilization, mobilization, signage, barricades, clean-up, security, and any other incidentals required to accommodate the Thanksgiving, Christmas and New Years' Holidays and Gasparilla Parade and Race shall be included in the various contract unit prices, and no additional payment shall be made therefor.

SP-58 Project Photographs

The Contractor will be required to furnish photographs of the project area immediately after completion of the construction for record and information. These photographs inside the box culvert will document the work completed and the location of the work with respect to the established baseline. A digital copy of these photographs will be included in the as-built information in Section SP-65.

SP-59 Project Videotaping

The existing conditions of the box culvert and lateral connections may be recorded on videotape by the City with reference to known structures in the project area to evaluate and determine the scope of each “Work Authorization.” These videotapes shall be available to the Contractor for reference. If video documentation is not available from the City, then Contractor will provide the video pursuant to Section SP-43. Once the tasks under the Work Authorization are complete, the Contractor will provide a video inspection in DVD format and a written log in a spreadsheet format documenting the condition of the box culvert with baseline station fully visible. The speed of the camera progress should be slow enough to discern the areas of repair and should pan the areas to provide a complete record of the repairs.

Prior to commencing work, the Contractor will be required to provide a DVD containing a continuous color video recording including complete coverage of pre-construction conditions of all surface features within the construction's zone of influence, (including detour routes) simultaneously produced audio commentary and electronic display of time and date. The video recording shall be sufficient to fulfill the technical and forensic requirements of the project and provide continuous unedited coverage, establishing locations and viewer orientation with clear, bright, steady and sharp video images with accurate colors free of distortion or other imperfections. The DVD must be accompanied by a detailed log of its contents including date, locations, video counter numbers and features. No work shall be allowed until the completed DVD and log are approved by the Engineer.

SP-60 Protection of Existing Building

The Contractor shall protect the existing buildings as indicated on the Plans.

The Contractor shall hire a certified testing company to monitor vibration levels at buildings while construction takes place in the vicinity.

All costs associated with protection of the facilities and vibration monitoring services shall be included in the price of the work to which they are incidental.

SP-61 Castings Identification

All casting covers, such as for inlets and manholes, shall bear the appropriate City of Tampa identification for storm sewers, as shown on the Plans and directed by the Engineer.

SP-62 Inlet Elevations

All inlet grate and throat elevations are approximate. The Contractor shall either verify the elevations before ordering precast structures or order structures six (6) inches lower than the grate or throat elevations. The Contractor shall cast in place the remaining height to attain required elevations. No additional payment will be made for this work.

SP-63 Storm Manhole Top Elevation

All storm manhole top elevations are approximate. The manhole frame and cover shall be standard frame or inverted frame type.

Before ordering the precast manhole, the Contractor shall determine the top elevation and the frame type. No additional payment will be made for this work.

SP-64 As-Built Plans

For any of the Work Authorizations, construction, installation, repair, and testing records shall be kept of the work. All such changes shall be incorporated in the "As-Built" plans, shown in red.

The Contractor shall provide the City of Tampa with one (1) hardcopy and (1) electronic high resolution color PDF copy of a spreadsheet showing the baseline stations and the location of all box culvert repairs broken down by repair types and quantity of repair. Contractor shall also provide a photograph of each repair identified by baseline station as stated in SP 59. Said photographs shall be in digital form on a flash drive, CD or a DVD. Pipe replacement or repairs to an inlet or manhole shall be located on a plan with horizontal ties to stationary objects, such as manholes, utility poles, inlets, etc.

Contractor shall also provide a copy of the as-built video inspection showing the completed work as requested in SP 60.

All as-built plans shall be submitted within seven (7) calendar days of the final inspection. The final payment will not be issued until the as-built plans have been submitted to, and accepted by the City.

SP-65 Safety:

A. Responsibility: Employees shall immediately report any unsafe work practice or unsafe condition to their supervisor(s). The Contractor is solely responsible for the safety of its workers, and shall comply with all applicable requirements [i.e.: 29 CFR 1910 -Occupational Safety and Health Standards, 29 CFR 1926 - Safety and Health Regulations for Construction, etc] and industry safety standards while at the work site. The fact that City personnel may bring un-safe conditions to the attention of any member of the Contractor's work force does not relieve the Contractor of this responsibility.

All Contractors' employees and sub-contractors should be given a copy of SP-66.

The Contractor shall have a designated Safety Officer within its organization. At the Pre-Construction meeting, the Contractor shall provide the name and contact information of the Safety Officer to the Engineer.

At the Pre-Construction meeting, the Contractor will be given pertinent safety related information, necessary forms and instructions (i.e.: Lockout/Tagout Procedures, Hot Work Permits, etc) that pertain to any work that might be utilized during the contract. The Contractor shall be responsible to disseminate that information to its employees and sub-contractors. Special care shall be taken by the Contractor to ensure that any new employee or sub-contractor to the work site shall be briefed on these safety instructions.

If warranted by the project and directed by the Engineer, the Contractor shall develop and implement a comprehensive health and safety plan for its employees that will cover all aspects of onsite construction operations and activities associated with the Contract. This plan must comply with all applicable health and safety regulations and any project specific requirements specified in the Contract.

B. Incident Reporting: All accidents that result in personal injury, illness or property damage shall be immediately reported and investigated, regardless of the extent of injury, illness or property damage. Employees must report accidents within one hour (or as soon as practical) from the time of occurrence to their immediate supervisor, who in turn will report it to the City's inspector. The City inspector will record the incident in the daily report and report it to the Risk Management Division (274-5708).

C. Air-Borne Debris: All personnel in proximity to drilling, sawing, sanding, scraping, spraying, power-washing or other work being done, either in enclosed spaces or in the open, that creates dust or air-borne debris shall wear eye protection [29 CFR 1910.133] and a respirator [29 CFR 1910.134].

D. Hot Work: All welding, soldering, brazing, acetylene cutting or any other work within the work area that produces high temperatures shall require a "Hot Work Permit" and may require one or more fire watches. The number and location of fire watches (if any) shall be a condition of the Hot Work Permit. A current, portable, fully charged fire extinguisher shall be located with each person performing hot work and each fire watch. The Hot Work Permit shall be signed off by the appropriate personnel and maintained in the project file.

E. Confined Spaces: OSHA defines a confined space as having limited or restricted means for entry or exit, and is not designed for continuous employee occupancy. Confined spaces include, but are not limited, to vaults, tanks, manholes, wet-wells, pipelines, utility tunnels, etc.

The Contractor shall take measures [29 CFR 1910.146 (c)(5)] to ensure that atmospheric conditions in confined spaces are not hazardous to occupants. This can be accomplished by forcing a sufficient amount of clean air through the confined space and testing the atmosphere by using a portable certified, calibrated, atmosphere monitor that meets OSHA requirements [29 CFR 1910.146(c)(5)(ii)(C)]. The atmosphere monitor should record oxygen content, flammable gases and vapors and toxic air contaminants, such as the Industrial Scientific TMX-412.

F. Lockout / Tagout Policy: The Lockout / Tagout program is designed to set standards to help safeguard all employees from hazardous electrical or mechanical energy while they are performing service or maintenance on machines and equipment at the work area. This program will also identify the practices and procedures to shut down and Lockout or Tagout machines and equipment. The Contractor shall be given a copy of the "LOCKOUT / TAGOUT POLICY AND PROCEDURES" instruction and shall make all of his employees and sub-contractors aware of this program.

No padlock (lockout) shall be removed except by the individual that installed it.

No tag (tagout) shall be removed except by the individual who installed it, except in an Emergency when the tag states "Do Not Use Unless in an Emergency". In that event, the Contractor shall notify the City who will prepare the necessary follow up report.

H. Trench Safety: Any excavation deeper than four (4) feet shall adhere to the requirements contained in 29 CFR 1926.650 thru 652 and the Florida Trench Safety Act [Florida Statutes, ss 553.60 - 553.64].

I. Open Flames: No fires shall be allowed. No open flames necessary for any construction activity shall ever be left un-attended. A current, portable, fully charged fire extinguisher shall be located with each activity requiring an open flame.

J. Sparks: Any activity lasting more than 10 continuous minutes that creates sparks, such as grinding or chipping, shall have a dedicated fire watch in attendance. A current, portable, fully charged fire extinguisher shall be located with each activity creating sparks, regardless if a fire watch is required or not.

K. First Aid: The Contractor shall furnish appropriate First Aid Kits [29 CFR 1910.151] and shall be responsible to ensure its employees are properly trained to render first aid. If injurious corrosive materials are to be utilized, eye wash and body wash facilities must be provided in the immediate area.

L. Related Costs: All costs associated with these, or any safety measures shall be included in the total lump sum contract price or the various contract item unit prices, as applicable, and no separate payment shall be made therefor.

SP-67 Cleaning: The cleaning methods (hydraulic or mechanical) to be employed shall be determined by the Contractor based upon the material and condition of the pipe, and shall be approved by the Engineer.

If the Contractor utilizes multiple cleaning methods for the same section of culvert, payment for the cleaning will be made based upon the cleaning method utilized having the highest Contract Item Unit Price, not a total of the unit prices for each cleaning method utilized. For example, if the Contractor initially attempts to clean a section of culvert by hydraulic means, but then uses mechanical means, then the Contractor will be paid for the mechanical cleaning only, assuming it has a higher unit price than the hydraulic cleaning.

SP-68 Disposal of Debris: The Contractor shall contact City of Tampa Engineer for approval, prior to the hauling and disposal of cleaning material from culverts. There are two options for the disposal described under contract item 170-03:

A. Hauling and Disposing to a City of Tampa Facility located at:
   CITY OF TAMPA STREET SWEEPINGS PROCESSING FACILITY
   Solid Waste
   2708 Maritime Blvd.
   Tampa, Florida 33605
B. Hauling and Disposing to a facility required by permitting agencies EPA, DER, DOT, Hillsborough County, City of Tampa and Expressway Authority.

SP-69 Video Inspection of Box Culvert: All box culverts within the project limits need to be cleaned and video-taped, prior to evaluation. Contractor's evaluation and repair proposal is to be reviewed and coordinated with a City structural consultant. Culverts are to be video-taped again after restoration is complete. Electronic copy and report are required to be submitted to the City for final approval.

* * *

CONTRACT ITEMS

CONTRACT ITEM 100 – CONTINGENCY

The Contingency is to be used at the discretion of the Engineer to adjust for any quantity overruns and/or unforeseen conditions. Payment shall be made as a lump sum and any payment for the contingency pay item will need prior approval by the Engineer. The Engineer may request a cost estimate for a contingency item from the Contractor prior to construction. No contingency funds shall be disbursed, if there are no contingency items.

Payment for Contingency Item will be made at the appropriate Contract Lump Sum Price.

CONTRACT ITEM 101 SERIES - MOBILIZATION

The Contractor shall furnish all equipment, labor, and materials necessary to mobilize his forces as necessary to perform all the work under this Contract.

Work under this section includes bonding and insurance; transportation, and otherwise movement of all personnel, equipment, supplies, materials and incidentals to the project site; establishment of temporary offices, buildings, safety equipment and first aid supplies, sanitary and other facilities; and all other preconstruction expense necessary for the start of the work, including pre-construction video of proposed work area and detour route and excluding the cost of construction materials, to be constructed under this Contract as shown on the Plans and directed by the Engineer.

Payment for Mobilization for each Work Authorization will be 10% of the total Work Authorization amount. An additional amount, listed as a Unit Price under 0101-02, will be added to the basic 10% charge for Emergency Work Authorization to compensate for immediate response.

CONTRACT ITEM 102 SERIES - MAINTENANCE OF TRAFFIC

102-01	Work Zone Signs
102-02	Barricades Type I or II
102-03	Cones
102-04	Light Towers
102-05	Flagman
102-06	Arrow Board
102-07	Variable Message Board

The Contractor shall furnish all materials, equipment, and labor to establish and maintain all traffic maintenance devices and personnel as shown on the Plans, specified, and directed by the Engineer.

The work includes installation of all signs, barricades, lights and flagmen, additional earth excavation, selected fill, temporary wearing surface, temporary bridges, and all appurtenant work complete in place as necessary to control traffic and provide for safety to the public, all in compliance with the Manual on Uniform Traffic Control Devices, "MUTCD," with subsequent revisions and additions, and to the satisfaction of the Engineer.

The Contractor will be required to provide an MOT plan, which complies with the standards referenced in FDOT Indices 600 series or is signed and sealed by a licensed Professional Engineer, to the City's Transportation Right of Way Department for a permit.

Payment for Maintenance of Traffic will be made at the appropriate Unit Prices.

CONTRACT ITEM 103-01 -- SILT FENCE

The Contractor shall furnish all labor, equipment, and materials to install silt fencing as shown on the Plans or directed by the Engineer. The work includes furnishing and installing City approved silt fence, maintaining and replacing any silt fence installed, and the removal and disposal of any silt fence installed at the end of the work order.

Payment for Silt Fence shall be made at the appropriate Contract Item Unit Price per linear foot of silt fence installed.

CONTRACT ITEM 104-01 -- FLOATING SILT BARRIER

The Contractor shall furnish all labor, equipment, and materials to install floating silt barrier as shown on the Plans or directed by the Engineer. The work includes furnishing and installing Engineer's approved floating silt barrier, maintaining and replacing any floating silt barrier installed, and the removal and disposal of any floating silt barrier installed at the end of the work order.

Payment for Floating Silt Barrier shall be made at the appropriate Contract Item Unit Price per linear foot of silt fence installed.

CONTRACT ITEM 142-01 – IMPORT CLEAN FILL MATERIAL

The Contractor shall furnish, from sources other than excavations under the Contract, transport, place, and compact select fill as necessary and not specifically included under other Contract Items. Select fill shall be as defined under the Workmanship and Materials Section 2 - Backfilling.

The work does not include transporting, placing, and compacting approved surplus fill from excavations under this Contract. The Contractor shall use all such approved surplus fill available from excavations under this Contract prior to importing select fill from other sources.

The quantities of Import Fill Material, obtained from sources other than excavations under this Contract, in cubic yards, to be measured for payment will be the actual compacted volume of select fill placed within the payment limits shown on the Plans or established by the Engineer.

Fill material used to fill voids resulting from unauthorized excavation, or where required for dewatering, will not be measured for payment even though their use is ordered by the Engineer. Fill material used for pipe bedding will not be measured for payment under this Contract Item. Such fill material is included in the various classified unit price Contract Items for pipelines.

Payment for Import Clean Fill Material will be made at the Contract Item Unit Price per cubic yard of fill material.

CONTRACT ITEM 142-02 – REMOVAL OF UNSUITABLE MATERIAL

The Contractor shall load, transport, and dispose of any material excavated or uncovered during the installation, repair, or replacement of pipes or structures which does not comply with the standards of clean fill material as described in the Workmanship and Materials Section 2 – Backfilling, or as directed by the Engineer. The suitability of fill material may be determined by soils testing at the expense of the Contractor.

The quantities of removed Unsuitable Material, in cubic yards, to be measured for payment will be the actual volume of unsuitable material fill transported off site based on truck tickets or other mutually acceptable methods approved by the Engineer.

Unsuitable material resulting from unauthorized excavation, or where required for dewatering, will not be measured for payment even though its removal is ordered by the Engineer. Debris removed from the box culvert during the cleaning process will be paid under Contract Item 170-03 Disposal of Debris.

Payment for Removal of Unsuitable Material will be made at the Contract Item Unit Price per cubic yard of material.

CONTRACT ITEM 170 SERIES – BOX CULVERT CLEANING

170-01	Hydraulic Cleaning of Box Culvert
170-02	Mechanical Cleaning of Box Culvert

The Contractor shall furnish all labor, equipment and materials to provide cleaning of the existing stormwater culverts and pipes prior to rehabilitation. Hydraulic cleaning requires the use of standard water jet equipment regardless of the number of passes required. Mechanical cleaning includes the use of a porcupine, bucket, or other equipment. High pressure cleaning includes the use of high pressure equipment and special nozzles to remove debris from the culvert. Use of high pressure equipment shall be as approved by the Engineer prior to commencement of work and may be halted, if high pressure cleaning may cause structural damage to culvert or pipe.

Debris and material resulting from the actual construction, repairs or rehabilitation must be removed periodically and in advance of a storm event, and the cost to remove said material should be included in the cost of the repairs listed in Contract Item Series 960.

Measurement for payment will be the actual length along the horizontal centerline of the box culverts or pipe cleaned, regardless of number of passes required or time needed to accomplish the work. Payment will include the cost of obtaining water, any permits, by-pass pumping and any other incidentals associated with the cleaning.

Payment will be made at the appropriate Contract Unit Price per linear foot.

CONTRACT ITEM 170-03 – DISPOSAL OF DEBRIS

The Contractor shall furnish all labor, materials and equipment to transport the debris removed from the existing work area during cleaning to an approved debris disposal site at the Contractor's expense in accordance with the Specific Provisions Section of these contract documents.

The quantities of disposed debris, in cubic yards, to be measured for payment will be the actual volume of debris transported off site based on truck tickets or other mutually acceptable methods approved by the Engineer.

Measurement for payment will be the actual number of cubic yards removed from the work area to the approved disposal site.

Payment for Disposal of Debris will be made at the appropriate Contract Unit Price per cubic yard of debris removed from the work area.

A. Hauling and Disposing to a City of Tampa Facility located at:
   CITY OF TAMPA STREET SWEEPINGS PROCESSING FACILITY
   Solid Waste
   2708 Maritime Blvd. 33605
   Tampa, Florida
B. Hauling and Disposing to a facility required by permitting agencies EPA, DER, DOT, Hillsborough County, City of Tampa and Expressway Authority.

CONTRACT ITEM 172-01 – VIDEO AND PHOTOGRAPHIC INSPECTION OF BOX CULVERT

The Contractor shall submit a DVD containing continuous color video recording including complete coverage of post-construction conditions of all surfaces within the box culvert that were repaired, replaced or rehabilitated with simultaneous audio commentary and electronic display of time and date. The video recording shall be sufficient to fulfill the technical and forensic requirements of the project and provide continuous unedited coverage, establishing locations (including established stations within the box culvert) and viewer orientation with clear, bright, steady and sharp video images with accurate colors free of distortion or other imperfections. The video must be accompanied by a detailed Log of the recorded contents including date, locations, track numbers and features. Final payment will not be released until the completed video and Log are approved by the Engineer.

The Contractor will be required to furnish photographs of the project area immediately after completion of the construction for record and information. These photographs inside the box culvert will document the work completed and the location of the work with respect to the established baseline. A digital copy of these photographs will be included in the as-built information.

Payment for Video and Photographic Inspection will be made at the appropriate Contract Unit Price per linear foot of box culvert inspected.

CONTRACT ITEM 0285-01 – 8” PERMANENT PAVEMENT BASE

The Contractor shall furnish all materials, equipment and labor to replace and maintain all permanent pavement base removed or damaged by installation or repair of pipe or box culvert and appurtenant work as shown on the Contract Plans, or as specified and directed by the Engineer.

Permanent pavement base replacement shall conform to the requirements of the Workmanship and Materials Workmanship and Materials Section 16 – Restoration of Street Pavements.

The quantity of 8” Permanent Pavement Base, in square yards, to be measured for payment will be the actual compacted area of pavement base material within payment limits for surface restoration shown on the Plans, or specified and ordered by the Engineer. If base material is required to be of a different thickness than 8 inches, then the unit cost will be adjusted based on the volume of material in one square yard 8 inches thick.

Payment for permanent pavement base replacement along pipelines shall include removal and replacement of permanent pavement base incidental to construction of manholes and structures. All permanent pavement base removed or damaged and requiring replacement outside payment limits will not be measured for payment and shall be replaced by the Contractor at his own expense.

Where the existing pavement is nonpermanent type consisting of shell, gravel, limerock, crushed stone, or other similar material, or is specified to be temporary, no payment will be allowed for replacement of pavement base. Replacement of material for such nonpermanent or temporary pavement will be included in the various classified unit price Contract Items for pipelines and no separate payment will be made therefore.

Payment for Permanent Pavement Base Replacement will be made at the Contract Item Unit Price per square yard of pavement base replaced.

CONTRACT ITEM 0334-01 - PERMANENT PAVEMENT SURFACE REPLACEMENT

The Contractor shall furnish all labor, equipment, and materials to replace and maintain all permanent pavement surface removed or damaged by installation or repair of pipe or box culvert and appurtenant work as shown on the Plans, or as specified and directed by the Engineer.

Permanent pavement surface replacement shall conform to the requirements of the Workmanship and Materials Section 16 – Restoration of Street Pavements.

The quantity of Permanent Pavement to be measured for payment will be the actual area of permanent pavement surface placed in the work within payment limits for surface restoration shown on the Plans, or as specified and ordered by the Engineer.

Payment for permanent pavement replacement along pipelines shall include removal and replacement of permanent pavement incidental to construction of manholes, inlets, and structures and portions of the roadway shown to be milled and resurfaced. All permanent pavement surface removed or damaged and requiring replacement outside payment limits will not be measured for payment and shall be replaced by the Contractor at his own expense.

Where the existing pavement surface is nonpermanent type consisting of shell, gravel, limerock, crushed stone, or other similar materials, or is specified to be a special temporary pavement surface, no payment will be allowed for replacement of permanent pavement surface. Replacement of surface for such nonpermanent or special temporary pavement will be included in the various classified unit price Contract Items for pipelines, and no separate payment will be made therefore.

Payment of Permanent Pavement will be made at the Contract Item Unit Price per ton of asphalt material installed.

CONTRACT ITEM 0350-01 – 6” CONCRETE DRIVEWAY REPLACEMENT

The Contractor shall furnish all labor, equipment and materials to construct the concrete driveway and appurtenant work as shown on the Contract Plans, specified, and directed by the Engineer.

The concrete shall conform to the requirements of the FDOT Specification 346, except Section 346.6.1.

The quantity of Concrete Driveway Replacement to be measured for payment will be the number of square yards of driveway replaced as shown on the Contract Plans, or as specified and directed by the Engineer.

Payment for 6” Concrete Driveway Replacement will be made at the Contract Item Unit Price per square yard of the concrete driveway placed.

CONTRACT ITEM 425 SERIES – STORMWATER STRUCTURES

0425-010	City of Tampa Type 1 Inlet – 3 feet to 5 feet
0425-015	City of Tampa Type 1 Inlet – 5 feet to 8 feet
0425-020	City of Tampa Manhole Access 12" to 24"
0425-025	City of Tampa Manhole Access 24" to 36"

The Contractor shall furnish all materials and equipment, test, construct, install, reconstruct, and maintain the stormwater structures and accesses as shown on the Plans, specified, and directed by the Engineer.

Stormwater inlets shall conform to the requirements of the Workmanship and Materials Section - 425 "Stormwater Inlets, Manholes and Junctions Boxes." Manhole Accesses shall be constructed to the proposed grades shown on the plans, or as directed by the Engineer.

The work includes all testing, excavation; backfilling; bedding; sheeting; shoring; bracing; dewatering; formwork; castings; brickwork; adjustment rings; adjusting structures; removal of pavement, sidewalks, curb and curb gutter; concrete work and reinforcing; all inlet and outlet pipe; making all pipe connections; coring or cutting holes in existing structure; setting pipe stubs and plugs for future connections; nonpermanent and special temporary pavement; disposal of surplus excavated material; and protection of adjacent facilities, and all appurtenant work, complete and in place.

Not included in the work are sheeting left in place, additional earth excavation or additional select fill material which, if ordered or specified, will be included for payment under other Contract items.

The number of Inlets or Accesses to be measured for payment will be the actual number of such structures installed in the work. Payment for Manholes and Manhole Accesses will be made at the appropriate Contract Item Unit Price.

CONTRACT ITEM 0430 SERIES – STORMWATER PIPES

0430-01	15” RCP, Class III Pipe
0430-02	18” RCP, Class III Pipe
0430-03	24” RCP, Class lll Pipe
0430-04	14”x23” ERCP, Class III Pipe
0430-05	19”x30” ERCP, Class III Pipe

The Contractor shall furnish all materials, labor and equipment, construct, test, and maintain all pipe culverts and storm sewers as shown on the Contract Drawings, specified, and directed by the Engineer.

All pipe culverts and storm sewers, including fittings, shall be manufactured and installed in accordance with the requirements of the respective Workmanship and Materials sections.

The work includes testing and excavation for all pipe culverts and storm sewers; short tunnels; backfill; sheeting; shoring; bracing; dewatering; pipe bedding; pipe fittings; pipe work; making all pipe connections; saw cutting pipe as necessary to create flush pipe connection with drainage structures; grouting; anchors; sealants; jackets and coupling bands; installation and removal of plugs and bulkheads; special temporary and nonpermanent pavement replacement; protection, repair and replacement of utilities and house services; protection and trimming of trees and shrubs; protection, repair and replacement of existing culverts and other storm sewer facilities and all utilities; removal and disposal of existing pipe, reconstruction or re-grading of road shoulders and ditches; protection of existing structures; making joints between pipes and manholes or structures; and all other work incidental to the installation of all pipe culverts and storm sewers complete in place.

The quantity of storm sewer pipe, in linear feet, to be measured for payment shall be the actual length of new pipelines placed in the work, as shown, specified and directed. Pipelines will be measured horizontally along the centerline of the pipe.

Deductions in the measured length of storm sewers will be made for the width of all structures, including manholes and inlets, measured from the inside wall to the inside wall of the structure.

Payment for Stormwater Pipes will be made at the appropriate Contract Item Unit Price per linear foot of pipe installed per the Bid Items listed above

CONTRACT ITEM 570-01 – SOD

The Contractor shall furnish all labor, equipment, and materials to install and maintain all sod and appurtenant work as shown on the Contract Plans, or as specified and directed by the Engineer.

All sod work under this series shall conform to Workmanship and Materials Section 17 Lawn Replacement.

The work includes all excavation, filling, shaping, grading, mulch, fertilizer, soil amendments, water, mowing, and other appurtenant work complete in place.

The amount of sod to be measured for payment will be the actual area of sod placed within the work area as shown on the Contract Plans, or directed by the Engineer.

Payment of Sod will be made at the Contract Item Unit Price per square yard of sod installed.

CONTRACT ITEMS 960 A, B, C, D, E, F, G, H, I, and J - CONCRETE WORK

For specific information on procedures for the work in Items A, B, C, D, E, F, G, H, I, and J see the Structural Specifications and Details section of the contract documents. Unit price for each Contract Item shall include the cost of testing, if required under that specification.

The quantity to be measured for payment under the Contract Item for **Crack Injection Repair** shall be measured in place in the completed work, and shall be made for the quantity in Linear Feet (L.F.) at the unit price bid in the Bid Form, as shown, specified and directed.

The quantity to be measured for payment under the Contract Item for **Sealing Cracks and Concrete Structure Surfaces** shall be measured in place in the completed work, and shall be made for the quantity in Square Feet (S.F.) at the unit price bid in the Bid Form, as shown, specified and directed.

The quantity to be measured for payment under the Contract Item for **Minor Spall Repair and Major Spall Repair**, shall be measured in place in the completed work by average dimensions in each of two planes, and shall be made for the quantity in Square Yards (SY) at the unit price bid in the Bid Form, as shown, specified and directed.

The quantity to be measured for payment under the Contract Item for **Culvert Root Intrusion Repair**, shall be measured as the number of these items completed in place, and shall be at the unit price bid for Each (EA) in the Bid Form, as shown, specified and directed.

The quantity to be measured for payment under the Contract Item for **Top Slab Inlet Repair**, shall be measured as the number of these items completed in place, and shall be at the unit price bid for Each (EA) in the Bid Form, as shown, specified and directed.

The quantity to be measured for payment under the Contract Item for **Artesian Well Repair**, shall be measured as the number of these items completed in place, and shall be at the unit price bid for Each (EA) in the Bid Form, as shown, specified and directed.

The quantity to be measured for payment under the **Contract Item for Restore Spalled Areas with Gunite**, shall be measured in place in the completed work by average dimensions in each of two planes, and shall be made for the quantity in Square Yards (SY) at the unit price bid in the Bid Form, as shown, specified and directed.

The quantity to be measured for payment under the Contract Item for **Void Filling Repair**, shall be measured as the quantity of material installed in place, and shall be at the unit price bid in Pounds (LBS) in the Bid Form, as shown, specified and directed.

The quantity to be measured for payment under the Contract Item for **Joint Sealing Repair**, shall be measured as the quantity of material installed in place, and shall be at the unit price bid in Pounds (LBS) in the Bid Form, as shown, specified and directed.

END OF SECTION

City of Tampa – DMI Sub-(Contractors/Consultants/Suppliers) Payments

(FORM MBD-30)

[ ] Partial [ ] Final

Contract No.: _____ WO#,(if any):_____ Contract Name:_____

Contractor Name:_____ Address:_____

Federal ID:_____ Phone:_____ Fax:_____ Email:_____

GC Pay Period:_____ Payment Request/Invoice Number:_____ City Department:_____

Total Amount Requested for pay period: $_____ Total Contract Amount(including change orders):$_____

-Type of Ownership - (F=Female M=Male), BF BM = African Am., HF HM = Hispanic Am., AF AM = Asian Am., NF NM = Native Am., CF CM = Caucasian S = SLBE

Type Trade/Work Activity []Sub []Supplier Federal ID	Company Name Address Phone & Fax	Total Sub Contract Or PO Amount	Amount Paid To Date Amount Pending Previously Reported	Amount To Be Paid For This Period Sub Pay Period Ending Date
			$	$
			$	$
			$	$
			$	$
			$	$
			$	$

(Modifying This Form or Failure to Complete and Sign May Result in Non-Compliance)

Certification: I hereby certify that the above information is a true and accurate account of payments to sub – contractors/consultants on this contract.

Signed:_____ Name/Title:_____ Date:_____

 Note: Detailed Instructions for completing this form are on the next page

Page 2 of 2 – DMI Payment

Instructions for completing The DMI Sub-(Contractors/Consultants/ Suppliers) Payment Form

(Form MBD-30)

This form must be submitted with all invoicing or payment requests where there has been subcontracting rendered for the pay period. If applicable, after payment has been made to the subcontractor, "Waiver and Release of Lien upon Progress Payment", "Affidavit of Contractor in Connection with Final Payment", or an affidavit of payment must be submitted with the amount paid for the pay period. The following will detail what data is required for this form. The instructions that follow correspond to the headings on the form required to be completed. **(Modifying or omitted information from this form my result in non-compliance).**

- **Contract No.** This is the number assigned by the City of Tampa for the bid or proposal.
- **W.O.#** If the report covers a work order number (W.O.#) for the contract, please indicate it in that space.
- **Contract Name.** This is the name of the contract assigned by the City of Tampa for the bid or proposal.
- **Contractor Name.** The name of your business.
- **Address.** The physical address of your business.
- **Federal ID.** A number assigned to a business for tax reporting purposes.
- **Phone.** Telephone number to contact business.
- **Fax.** Fax number for business.
- **Email.** Provide email address for electronic correspondence.
- **Pay Period.** Provide start and finish dates for pay period. (e.g. 05/01/13 – 05/31/13)
- **Payment Request/Invoice Number.** Provide sequence number for payment requests. (ex. Payment one, write 1 in space, payment three, write 3 in space provided.)
- **City Department**. The City of Tampa department to which the contract pertains.
- **Total Amount Requested for pay period.** Provide all dollars you are expecting to receive for the pay period.
- **Total Contract Amount (including change orders).** Provide expected total contract amount. This includes any change orders that may increase or decrease the original contract amount.
- **Signed/Name/Title/Date**. This is your certification that the information provided on the form is accurate.
- **See attached documents.** Check if you have provided any additional documentation relating to the payment data. Located at the bottom middle of the form.
- **Partial Payment.** Check if the payment period is a partial payment, not a final payment. Located at the top right of the form.
- **Final Payment.** Check of this period is the final payment period. Located at the top right of the form.

The following instructions are for information of any and all subcontractors used for the pay period.

- **(Type) of Ownership.** Indicate the Ethnicity and Gender of the owner of the subcontracting business or SLBE.
- **Trade/Work Activity.** Indicate the trade, service, or material provided by the subcontractor.
- **SubContractor/SubConsultant/Supplier.** Please indicate status of firm on this contract.
- **Federal ID.** A number assigned to a business for tax reporting purposes. This information is critical in proper identification of the subcontractor.
- **Company Name, Address, Phone & Fax**. Provide company information for verification of payments.
- **Total Subcontract Amount.** Provide total amount of subcontract for subcontractor including change orders.
- **Amount Paid To Date.** Indicate all dollars paid to date for the subcontractor.
- **Amount Pending, Previously Reported.** Indicate any amount previously reported that payments are pending.
- **Amount To Be Paid for this Period.** Provide dollar amount of dollars requested for the pay period.
- **Sub Pay Period Ending Date.** Provide date for which subcontractor invoiced performed work.

Forms must be signed and dated or will be considered incomplete. The company authorized representative must sign and certify the information is true and accurate. Failure to sign this document or return the document unsigned can be cause for determining a company is in non-compliance of Ordinance 2008-89.

If any additional information is required or you have any questions, you may call the Minority Business Development Office at (813) 274-5522.

SIGN EXAMPLE ONLY GRAPHIC TO BE DEVELOPED BY CONTRACTOR

scale: 3" = 3"

Sign Information

Building a Better Tampa

David L. Tippin Water Treatment Facility
Caustic Soda Piping Improvements

Project provides for improvements at the David L. Tippin Water Treatment Facility to improve the reliability and safety of the Sodium Hydroxide System of the water distribution system within the facility.

$TBD investment
Scheduled for completion in TBD 2014

TBD

Colors

Blue: Sherwin Williams Naval SW6244
Green: Sherwin Williams Center Stage SW6920
White: Sherwin Williams Pure White SW7005

Font

Franklin Gothic

K:\CA\edr\dpw project sign 4-28-04.dwg, 08/22/2005 12:32:38 PM, pw1m

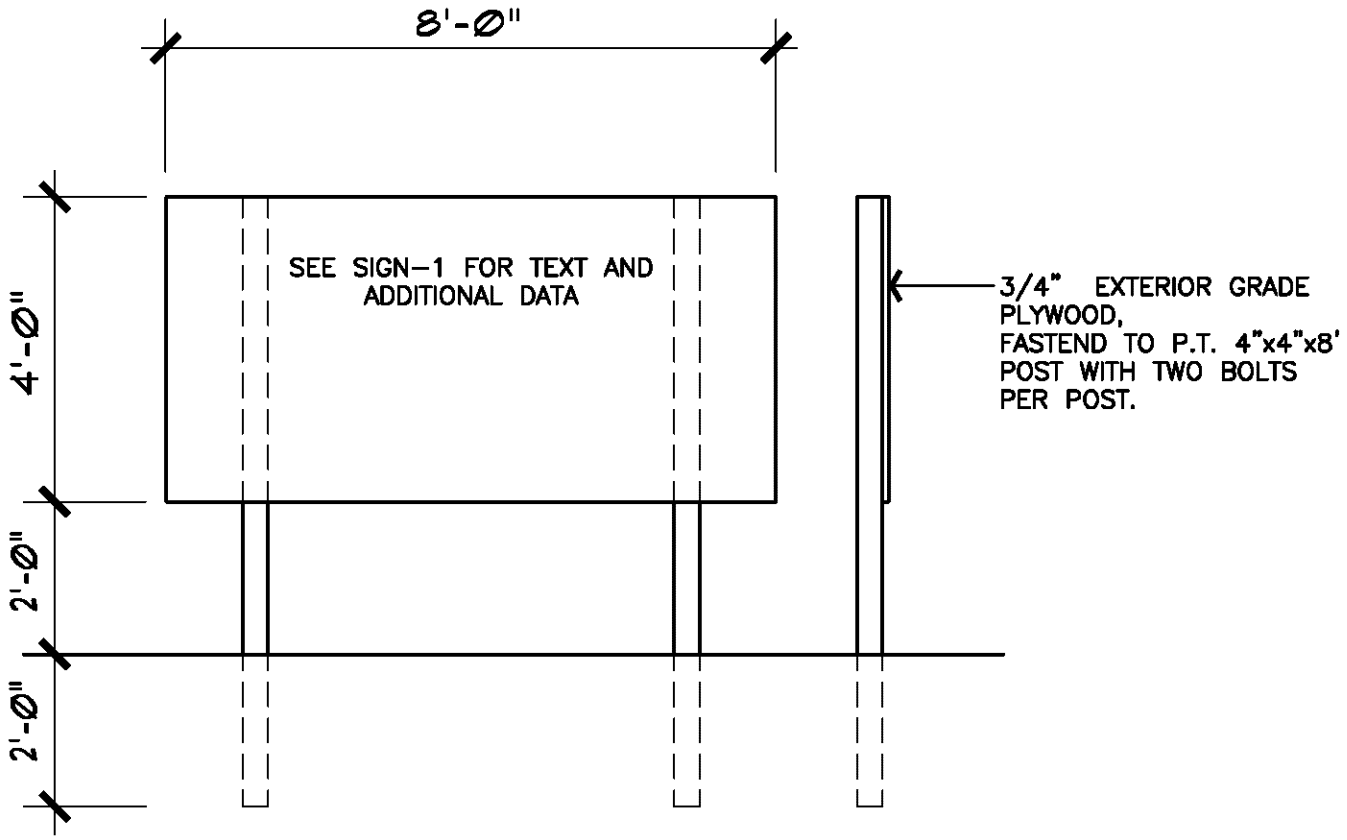

CITY OF TAMPA-PROJECT SIGN
REVISED 4/28/04

SIGN - 2

SPECIFICATIONS

WORKMANSHIP AND MATERIALS

SECTION 1 - EXCAVATION - EARTH AND ROCK

W-1.01 General

Opencut excavations shall be made to the widths and depths necessary for constructing all structures, pipelines and other conduits included in the Contract, according to the Plans, and includes the excavation of any material which, in the opinion of the Engineer, is desirable to be excavated for any purpose pertinent to the construction of the work. Banks more than 5 feet high, where a danger of slides or cave-ins exist, shall be shored or sloped to the angle of repose.

Where excavations are to be made below groundwater, the Contractor shall submit to the Engineer for approval, in detail, his proposed method for control of groundwater, including a description of the equipment he plans to use and the arrangement of such equipment. No such excavation shall be started until approval of the Engineer has been obtained. Dewatering work shall be included in the Contract Items for pipelines, box culverts, inlets, manholes and other structures, and pumping stations, and no separate payment will be made therefor.

W-1.02 Clearing

The site of all opencut excavations shall first be cleared of obstructions preparatory to excavation. This includes the removal and disposal of vegetation, trees, stumps, roots and bushes, except as specified under the subsection headed "Trench Excavation."

W-1.03 Authorized Additional Excavation

In case the materials encountered at the elevations shown are not suitable, or in case it is found desirable or necessary to go to an additional depth, or to an additional depth and width, the excavation shall be carried to such additional depth and width as the Engineer may direct in writing. The Contractor shall refill such excavated space with either Class I concrete, or select sand or crushed stone fill material, as ordered. Where necessary, fill materials shall be compacted to avoid future settlement. Additional earth excavations so ordered and concrete, or selected sand or crushed stone fill material ordered for filling such additional excavation and compaction of select sand or crushed stone fill material will be paid for under the appropriate Contract Items or where no such items exist, as extra work as specified in Article 7 of the Agreement.

W-1.04 Unauthorized Excavation

Wherever the excavation is carried beyond or below the lines and grades shown or given by the Engineer, except as specified in the subsection headed "Authorized Additional Excavation," all such excavated space shall be refilled with such material and in such manner as may be directed in order to ensure the stability of the various structures. Spaces beneath all manholes, structures or pipelines excavated without authority shall be refilled by the Contractor at his own expense, with Class I concrete, or select sand or crushed stone fill material, and properly compacted, as ordered by the Engineer, and no separate payment will be made therefor.

W-1.05 Segregation and Disposal of Material

Topsoil suitable for final grading and landscaping and excavated material suitable for backfilling or embankments shall be stockpiled separately on the site in locations approved by the Engineer. Excavated and other material shall not be stored nearer than 4 feet from the edge of any excavation and shall be so stored and retained as to prevent its falling or sliding back into the excavation. Surplus excavated material and excavated material unsuitable for backfilling or embankments shall become the property of the Contractor and shall be transported, as approved by the Engineer, away from the site of the work to the Contractor's own place of disposal.

W-1.06 Shoring and Sheeting

All excavations shall be properly shored, sheeted, and braced or cut back at the proper slope to furnish safe working conditions, to prevent shifting of material, to prevent damage to structures or other work, and to avoid delay to the work, all in compliance with the U. S. Department of Labor Safety and Health Regulations for Construction promulgated under the Occupational Safety and Health Act of 1970 (PL 91-596) and under Section 107 of the Contract Work Hours and Safety Standards Act (PL 91-54). The minimum shoring, sheeting and bracing for trench excavations shall meet the general trenching requirements of the safety and health regulations. Before starting excavation for jacking pits and structures, the Contractor shall submit complete design calculations and working drawings of proposed sheeting and bracing arrangements which have been prepared, signed and sealed by a Professional Engineer registered in the State of Florida. Bracing shall be so arranged as not to place any strain on portions of completed work until the general construction has proceeded far enough, in the opinion of the Engineer, to provide ample strength. If the Engineer is of the opinion that at any point the sheeting or supports furnished are inadequate or unsuited for the purpose, he may order additional sheeting or supports to be installed. Whether or not such orders are issued, the sole responsibility for the design, methods of installation, and adequacy of the sheeting and supports shall be and shall remain that of the Contractor.

Tight sheeting shall be used in that portion of the excavation in City collector and arterial streets and in State and County highways below the intersection of a 1 on 1 slope line from the edge of the existing pavement to the nearest face of the excavation.

In general, sheeting for pipelines shall not be driven below the elevation of the top of the pipe. If it is necessary to drive the sheeting below that elevation in order to obtain a dry trench or satisfactory working conditions, the sheeting shall be cut off at the top of the pipe and left in place below the top of the pipe at no additional cost.

The sheeting and bracing shall be removed as the excavation is refilled in such a manner as to avoid the caving in of the bank or disturbance to adjacent areas or structures except as otherwise shown or directed. Voids left by the withdrawal of the sheeting shall be carefully filled by ramming or otherwise as directed.

Permission of the Engineer shall be obtained before the removal of any shoring, sheeting, or bracing. Such permission by the Engineer shall not relieve the Contractor from the responsibility for injury or to other property or persons from failure to leave such sheeting and bracing in place.

W-1.07 Sheeting Left in Place

The Engineer may order, in writing, any or all sheeting or bracing to be left in place for the purpose of preventing injury to the structures or to other property or to persons, whether such sheeting or bracing was shown on the Plans or placed at his direction or otherwise. If left in place, such sheeting shall be cut off at the elevation ordered, but, in general, such cutoffs shall be at least 18 inches below the final ground surface. Bracing remaining in place shall be driven up tight.

The right of the Engineer to order sheeting and bracing left in place shall not be construed as creating any obligation on his part to issue such orders.

Sheeting and bracing left in place, by written order of the Engineer, will be paid for under the appropriate Contract Item if included in the Proposal or otherwise by provisions of extra work as specified in Section 7 of the Agreement.

W-1.08 Removal of Water

At all times during the excavation period and until completion and acceptance of the work at final inspection, ample means and equipment shall be provided with which to remove promptly and dispose of properly all water entering any excavation or other parts of the work. The excavation shall be kept dry. No water shall be allowed to rise over or come in contact with masonry and concrete until the concrete and mortar have attained a set satisfactory to the Engineer and, in any event, not sooner than 12 hours after placing the masonry or concrete. Water pumped or drained from the work hereunder shall be disposed of in a safe and suitable manner without damage to adjacent property or streets or to other work under construction. Water shall not be discharged onto streets without adequate protection of the surface at the point of discharge. No water shall be discharged into sanitary sewers. No water containing settleable solids shall be discharged into storm sewers. Any and all damage caused by dewatering the work shall be promptly repaired by the Contractor.

W-1.09 Structure Excavation

Excavations shall be of sufficient size and only of sufficient size to permit the work to be economically and properly constructed in the manner and of the size specified. The bottom of the excavation in earth and rock shall have the shape and dimensions of the underside of the structure wherever the nature of the ground will permit.

W-1.10 Trench Excavation

Before starting trench excavation, all obstructions which are to be removed or relocated shall be cleared away. Trees, shrubs, poles, and other structures which are to be preserved shall be properly braced and protected. All trees and large shrubs shall be preserved with damage to the root structure held to a minimum, unless otherwise shown or specified. Small shrubs may be preserved or replaced with equivalent specimens.

The width of trenches shall be such as to provide adequate space for workmen to place, joint, and backfill the pipe properly, but shall be kept to a minimum. Unless otherwise approved by the Engineer, the clear width of the trench at the level of the top of the pipe shall not exceed the sum of the outside diameter of the pipe barrel plus 24 inches.

In sheeted trenches, the clear width of the trench at the level of the top of the pipe shall be

measured to the inside of the sheeting.

Should the Contractor exceed the maximum trench widths specified above, without written approval of the Engineer, he may be required to provide, at his own expense, concrete cradle or encasement for the pipe as directed by the Engineer, and no separate payment will be made therefor.

The Contractor shall excavate trenches to the respective depths, below the bottom of the pipe, for the various classes of pipe bedding shown on the Plans so that pipe bedding material can be placed in the bottom of the trench and shaped to provide a continuous, firm bearing for the pipe barrel and bells.

If unstable material is exposed at the level of the bottom of the trench excavation, it shall be excavated in accordance with the subsection headed "Authorized Additional Excavation." When in the judgement of the Engineer the unstable material extends to an excessive depth, he may advise the Contractor in writing to stabilize the trench bottom with a crushed stone, sand mat or gravel mat to ensure firm support for the pipe by other suitable methods. Payment for such trench stabilization will be made under the appropriate Contract Items or where no such items exist, as extra work as specified in Section 7 of the Agreement.

The open excavated trench preceding the pipe laying operation and the unfilled trench with pipe in place shall be kept to a minimum length causing the least disturbance to traffic and use of adjacent property. Ladders shall be provided and so located as to provide means of exit from the trench without more than 25 feet of lateral travel.

W-1.11 Rock Excavation

The term "rock" as used herein shall include all materials which have compressive strengths in excess of 300 psi in their natural undisturbed state and which, in the opinion of the Engineer, require drilling and blasting, wedging, sledging, barring or breaking with power tools not otherwise required for normal excavating.

Rock shall be excavated, within the boundary lines and grades as shown on the Plans, specified, or given by the Engineer. Rock removed from the excavation shall become the property of the Contractor and shall be removed by him away from the site of the work to his own place of disposal, and no separate payment will be made therefor.

All shattered rock and loose pieces shall be removed.

For trench excavation in which pipelines or other conduits are to be placed, the rock shall be excavated to a minimum depth of 6 inches below the bottom of the pipe and the excavated space refilled with pipe bedding material. Placing, compacting, and shaping pipe bedding material shall be included in the various classified unit price Contract Items for pipelines, and no separate payment will be made therefor.

For manhole excavation, the rock shall be excavated to a minimum depth of 8 inches below the bottom of the manhole base for pipelines 24 inches in diameter and larger, and 6 inches below the bottom manhole base for pipelines less than 24 inches in diameter and the excavated space refilled with crushed stone. Placing, compacting, and shaping crushed stone for manhole bases shall be included in the appropriate Contract Items for manhole bases, and no separate payment will be made therefor.

For cast-in-place structures, the rock shall be excavated only to the bottom of the structure or

foundation slab.

Excavated space in rock below structures, pipelines, and manholes which exceeds the depths specified above shall be refilled with Class I concrete, crushed stone, or other material as directed by the Engineer. Refilling of over-excavated rock in rock shall be included as part of the rock excavation, and no separate payment will be made therefor.

Where applicable, the requirements of the subsections on "Trench Excavation" and "Structure Excavation" shall be followed.

Blasting may be performed only when approved by the Engineer and authorized by the Agency having jurisdiction over the subject location and in accordance with all laws, ordinances, and regulations of the Agency.

W-1.12 Excavation for Jacking and Augering

Excavation for jacking or augering shall meet the requirements of the Workmanship and Materials section headed "Jacking and Augering."

* * *

SECTION 6 - REINFORCING STEEL

W-6.01 Standards

Reinforcing steel bars for concrete reinforcement shall be deformed bars meeting the requirements of ASTM Des: A 615, Grade 60, unless shown or specified otherwise. They shall be free from defects, kinks, and from bends that cannot be readily and fully straightened in the field. Test certificates of the chemical and physical properties covering each shipment shall be submitted for approval.

Reinforcing mesh shall be of the electrically welded type, with wires arranged in rectangular patterns, of the sizes shown or specified and shall meet the requirements of ASTM A 185.

W-6.02 General

Reinforcing steel bars shall be supplied in lengths which will allow them to be conveniently placed in the work and provide sufficient lap at joints. Dowels of proper lengths, size, and shape shall be provided for tying walls, beams, floors, and the like together when shown, specified, or ordered.

Stirrups and ties shall have a minimum inside radius of bend of 2-1/2 bar diameters. All other bars No. 7 and smaller shall have a minimum inside radius of bend of 3 bar diameters, and No. 8 bars and larger shall have a minimum inside radius of bend of 4 bar diameters.

Splices in all reinforcements shall be lapped as specified hereinafter in "Table 1 - Grade 60 Reinforcing Bar Splice Lapping Lengths" unless shown or specified otherwise. All splices shall be staggered, unless otherwise approved by the Engineer.

TABLE 1 - GRADE 60
REINFORCING BAR SPLICE LAPPING LENGTHS

Bar Size	#3	#4	#5	#6	#7	#8	#9	#10	#11
Top Bars - ACI Class B	13	17	22	28	38	50	64	81	100
Top Bars - ACI Class C	17	23	29	37	50	66	83	106	130
Other Bars - ACI Class B	12	12	16	20	27	36	46	58	71
Other Bars - ACI Class C	12	16	20	26	36	47	60	75	93

Notes:

1. Splice length given in inches.

2. Top bars are all horizontal reinforcement so placed that more than 12 inches of concrete is cast in the member below the bar. This includes horizontal wall reinforcement.

3. Where lapping bars of different sizes, use lap required for larger bar.

4. For all bars spaced closer than 6 inches, increase lap length 25 percent.

5. Unless otherwise specified, the length of lap for splices shall be as shown for ACI Class B where no more than 50 percent of the bars are lap spliced, and as shown for ACI Class C where more than 50 percent of the bars are lap spliced.

W-6.03 Detailing

The Contractor shall submit detailed placing drawings and bar listed to the Engineer for approval in accordance with the requirements for "Working Drawings" of the General Provisions, except as otherwise specified herein.

All provisions of the latest ACI "Manual of Standard Practice for Detailing Reinforced Concrete Structures" shall be followed in the preparation of placing drawings and bar lists.

Wall and slab reinforcing shall not be billed in sections. Complete elevations of all walls and complete plans of all slabs must be shown, except that when more than one wall or slab are identical only one such elevation or plan will be required. These plans or elevations need not be true views of the walls or slabs shown. Every reinforcing bar in a slab or a wall shall be billed on either a plan or an elevation. Where necessary, sections shall be taken to clarify the arrangement of the steel reinforcement. All bars shall be identified on such sections, but in no case shall bars be billed on such sections.

For all reinforcing bars, unless the location of a bar is perfectly obvious, the location of such bar or bars shall be given by a dimension to some structural feature which must be readily distinguishable at the time bars are placed.

The set of placing drawings shall be complete in and by themselves to the extent that the bar setters will have no occasion to refer to the design drawings.

Before submittal to the Engineer, every placing drawing and bar list shall be completely checked including the quantity, size, type, length, bend dimensions, and type of support for all bars or mesh, and all other information on the drawing and list. The checking shall be done by a qualified person and all necessary corrections made.

If after placing drawings and bar lists have been submitted to the Engineer for approval, a partial or spot check by the Engineer reveals that the placing drawings obviously have not been checked by a qualified person, they will be returned to the Contractor for such a check and corrections, after which they shall be resubmitted for approval by the Engineer.

W-6.04 Delivery

Reinforcing steel shall be delivered to the work in bundles strongly tied, and each group of both bent and straight bars shall be identified with a metal tag giving the identifying number corresponding to the shop drawings and bar schedules. All bars shall be properly stored in an orderly manner, at least 12 inches off the ground and kept clean and protected from the weather, as directed by the Engineer, after delivery at the site of the work.

W-6.05 Protection

Reinforcing steel shall be delivered without rust other than that which may have accumulated during transportation to the work. It shall at all times be fully protected from moisture, grease, dirt, mortar, and concrete. Before being placed in position, it shall be thoroughly cleaned of all loose mill scale and rust and of any dirt, coatings, or other material that might reduce the bond. If there is a delay in depositing concrete, the steel shall be inspected and satisfactorily cleaned immediately before the concrete is placed.

W-6.06 Fabrication and Installation - Bars

Bars shall be cut to required length and accurately bent before placing. Bars shall be bent in the shop unless written approval of field bending is obtained from the Engineer. If field bending is permitted, it shall be done only when the air temperature where the bending operation is performed is above 30 degrees F.

The bars shall be placed in the exact positions shown with the required spacing and shall be securely fastened in position at intersections to prevent displacement during the placing of the concrete. The bars shall be fastened with annealed wire of not less than 18 gauge or other approved devices. Spacing chairs of a type approved by the Engineer shall be furnished and properly placed to support and hold reinforcing bars in position in all beams and slabs, including slabs placed directly on the subgrade. Chairs which rest on the forms for slabs, the underside of which will be exposed to view in the finished work, shall have those portions galvanized or plastic coated which come in contact with the forms.

Splices in all reinforcement shall be lapped as specified in "Table 1 - Grade 60 Reinforcing Bar Splice Lapping Lengths" in the subsection headed "General." Splices at points of maximum tensile stress shall be avoided wherever possible. Temperature bars shall have a minimum clear spacing of 2-1/2 diameters. All bar splices shall be staggered where possible.

All welded splices shall be full penetration, butt welds, made by certified welders in accordance with AWS D12.1. Thermite welding or Cadweld type couplers may be used where approved by the Engineer.

On any section of the work where horizontal bars run further than the length of the forms, the form or head against which the work ends shall be perforated at the proper places to allow the bars to project through a distance at least equal to the lap specified. The projecting ends, however, unless otherwise directed by the Engineer, shall be of different lengths so that in no place will laps in adjoining bars in the same place occur opposite each other.

W-6.07 Installation - Mesh

Reinforcing mesh shall be placed in the positions shown, specified, or required to fit the work. Suitable spacing chairs or supports as specified for bars shall be furnished and placed to maintain the mesh in correct location. Where a flat surface of mesh is required, the mesh shall be rolled or otherwise straightened to make a perfectly flat surface before placing. The length of laps not indicated shall be approved by the Engineer.

W-6.08 Concrete Protection for Reinforcing Steel

Reinforcing steel shall be placed and held in position so that the concrete cover, as measured from the surface of the bar to the surface of the concrete, shall be not less than the following, except as otherwise shown, specified, or directed:

1. General

   a. Concrete deposited directly against soil - 3 inches.
   b. Concrete in contact with soil or exposed to weather or sewage – 2 inches

2. Slabs (See Item 6)

   a. Top all surfaces - 2 inches

3. Beams - Girders - Columns (See Item 6)

   a. To main reinforcement - 2 inches
   b. To ties - 1-1/2 inches

4. Walls (See Item 6)

   a. 12 inches or more thick - 2 inches
   b. Less than 12 inches thick:
      (1) #6 bars or larger - 2 inches
      (2) #5 bars or smaller - 1-1/2 inches

5. Footings and Base Slabs

   a. Top face - 3 inches
   b. Sides and ends - 3 inches
   c. Bottom, Concrete deposited directly against ground - 3 inches
      Concrete deposited directly against lean concrete work mat - 2 inches

6. Add 1/2 inch for surfaces contacting or exposed to water or sewage.

7. Laps - as specified in "Table 1 - Grade 60 Reinforcing Bar Splice Lapping Lengths" in the subsection headed "General."

8. Spacing - clear distance between parallel bars - 2 inches minimum.

SECTION 8 - METAL CASTINGS

W-8.01 General

Metal castings include all miscellaneous ferrous and nonferrous castings.

Wheel guards, valve boxes, manhole frames and covers, stop log grooves, brackets and supports for piping, gutter inlets, floor, roof and gallery drains, stormwater inlets, beehive grates and frames, cleanout covers, and special malleable iron castings and inserts are included in this classification.

W-8.02 Materials

Metal castings shall meet the requirements of the following standards, except as otherwise specified herein.

Gray Iron	ASTM Des: A 48
Malleable Iron	ASTM Des: A 47
Carbon Steel	ASTM Des: A 27
Alloy Steel	ASTM Des: A 148
Aluminum	ASTM Des: B 26
Aluminum Bronze	ASTM Des: B 148
Silicon Bronze	Navy Spec. 46B28
Manganese Bronze	ASTM Des: B 132 or B 147
Ductile Iron	ASTM Des: A 536

W-8.03 Workmanship

Castings shall be made accurately to approved dimensions and shall be planed or ground where marked or where otherwise necessary to secure perfectly flat and true surfaces. Allowance shall be made in the patterns so that the specified thickness shall not be reduced. Manhole and cleanout frames and covers shall conform to the details shown on the Plans and shall be true and shall seat at all points. No plugging of defective castings will be permitted. All castings shall be erected to accurate grades and alignment, and when placed in concrete, they shall be carefully supported to prevent movement during concreting.

W-8.04 Weights

No castings weighing less than 95 percent of the theoretical weight, based on required dimensions, will be accepted. The Contractor shall provide facilities for weighing castings in the presence of the Engineer, or shall furnish invoices showing true weights, certified by the supplier.

* * *

SECTION 10 - DUCTILE IRON PIPE AND FITTINGS

W-10.01 General

All ductile iron pipe shall meet the requirements of AWWA C151. The type and configuration of pipe bedding for buried pipe shall be as shown on the Plans. Coatings and linings for ductile iron pipe and fittings shall conform to the subsection headed "Coatings and Linings," contained herein. Pipe joints shall be bell and spigot, flanged, or mechanical joint as shown on the Plans.

Ductile iron pipe and ductile iron fittings buried in the ground for force mains or installed in pumping stations shall have a minimum thickness of Class 52 unless specified otherwise as shown on the Plans. Ductile push-on iron pipe and fittings for gravity systems, including house laterals, shall be Class 54 and shall have an interior lining as specified in the subsection "Lining for Ductile Iron Gravity Pipe."

W-10.02 Flanged Pipe

Flanged pipe shall conform to the requirements of AWWA C115. Flanges shall be ductile iron and shall have long hubs. There shall be no leakage through the pipe threads, and the flanges shall be designed to prevent corrosion of the threads from outside.

W-10.03 Fittings

All ductile iron fittings shall meet the requirements of AWWA C110, and have a pressure rating of 250 psi, or as specified, whichever is larger.

W-10.04 Flanged Joints

Flanged joints shall meet the requirements of ANSI Specification B16.1. Flanges, flange facing drilling, and protecting shall be as specified for flanged pipe. Bolts and nuts for flanged joints shall be Type 316 stainless steel unless otherwise stated on the Plans or directed by the Engineer.

Except where otherwise directed by the Engineer, gaskets for flanged joints shall be of the full-face type, meeting the requirements of ANSI B16.21. Gaskets shall be rubber with cloth insertion, as made by the Crane Company, Garlock Packing Company, U.S. Rubber Company, or equal.

W-10.05 Mechanical Joints

Mechanical joints shall meet the applicable requirements of AWWA C111.

W-10.06 Push-on Joints

Push-on joints shall be of the bell and spigot type which employs a single, elongated grooved gasket to effect the joint seal. Push-on joints shall meet the applicable requirements of AWWA C111.

W-10.07 Wall Castings, Connecting Pieces, and Special Fittings

Wall castings and connecting pieces, such as bell and bell; bell and spigot; bell and flange; flange and flange; flange and spigot; and flange and flare, shall meet the requirements of ANSI Specification A21.10. Unless otherwise shown or specified, fittings 14 inches and larger shall have a pressure rating of 250 psi.

Where special fittings are required, they shall be of an approved design and shall have the same diameters and thicknesses as standard fittings, unless otherwise required, but their laying lengths and other functional dimensions shall be determined by their positions in the pipelines and by the particular piping materials to which they connect.

Where watertightness is essential and at other locations where indicated, wall castings shall be provided with an integrally cast intermediate collar located at the center of the wall.

W-10.08 Sleeve-Type Couplings

Except where standard solid sleeves or split sleeves are shown or specified, sleeve-type couplings for ductile iron pipe shall be Style 38 couplings as made by Dresser Industries, Inc., or Type 411 as made by Smith-Blair, or equal. Gaskets shall be of molded rubber, Dresser Plain Grade 27, Smith-Blair 003, or equal. Middle rings shall be without a pipe stop and shall be at least 1/4 inch thick and 5 inches wide for 8-inch and smaller pipe, 3/8 inch thick and 7 inches wide for 10-inch through 30-inch pipe, and 1/2 inch thick and 10 inches wide for 36-inch and larger pipe with follower rings of appropriate thickness, unless otherwise shown or specified.

Sleeve-type couplings shall be shop coated with Dresser Red "D" Shop-Coat, Smith-Blair Standard Blue Shop Coat, or equal nontoxic material compatible with the finished coatings specified.

W-10.09 Coatings and Linings

Pipe which is to be buried shall have the standard outside coating specified in AWWA C151-8.1.

Unless otherwise shown on the Plans or specified, all ductile iron pipe and fittings shall have a cement-mortar lining meeting the requirements of AWWA C151-8.2.

The weight and class designation shall be painted conspicuously in white on the outside of each pipe, fitting, and special casting after the shop coat has hardened.

W-10.10 Harnessing

Ductile iron pipe and fittings with mechanical joints that require harnessing shall be provided with ductile iron retainer glands, Megalug, as manufactured by EBAA Iron, or equal. The glands shall be installed in accordance with the manufacturer's recommendations. Set screws shall be tightened to 75 foot-pounds torque. Where the glands are to be buried or not exposed to view, the assembly shall be given 2 heavy coats of asphalt varnish after installation. Ductile iron pipe and fittings with push-on joints that require harnessing shall be Clow F-128 "Super Lock Joint," American Cast Iron Pipe "Lok-Fast Joint," U.S. Pipe and Foundry Company "TR Flex," or equal.

W-10.11 Lining for Ductile Iron Gravity Pipe

All ductile iron pipe and fittings, unless otherwise shown or specified, shall be provided with a special interior lining. For sizes 8 inches in diameter and above, the lining material shall be virgin polyethylene complying with ASTM D 1248 (40 mils thick) heat bonded to the interior of the pipe for all pipe sizes. For 6-inch diameter, the lining material shall either be the aforementioned polyethylene system or a 40 mil thick coal tar epoxy system. All pipe joint bells shall be coated on the inside with the same lining material as used in the pipe barrel. All field cuts shall be field coated with 40 mils of high build epoxy compatible with the lining.

W-10.12 Polyethylene Encasement

Polyethylene encasement shall be installed on all ductile iron pipe and fittings within the sections indicated on the Plans or as directed by the Engineer and in accordance with ANSI/AWWA C105/A21.5.

Although not intended to be a completely air-and-water-tight enclosure, the polyethylene shall prevent contact between the pipe and the surrounding backfill.

Polyethylene encasement shall be installed in accordance with the pipe manufacturer's instructions, or in a manner acceptable to the Engineer. Polyethylene encasement shall extend 1 foot beyond the joint in both directions (a total of 2-foot overlap) and shall be adhered to said joint with 2-inch wide green marking tape. The slack width shall be taken up at the top of the pipe to make a snug, but not tight, fit along the barrel of the pipe, securing the fold at quarter points. Upon installation of the encasement, any cuts or damaged portions of the polyethylene encasement shall be securely mended with tape or with a short length of polyethylene sheet, or a tube cut open, wrapped around the pipe to cover the damaged area, and secured in place.

Backfill material shall be the same as specified for pipe without polyethylene wrapping; however, extra care should be taken that the backfill be free from cinders, refuse, boulders, rocks, stones, or other materials that could damage the encasement. Special care shall be taken to prevent damage to the polyethylene wrapping when placing backfill.

Because prolonged exposure to sunlight will deteriorate polyethylene film, such exposure prior to backfilling the wrapped pipe shall be kept to a minimum.

W-10.13 Ductile Iron Pipe Exterior Coating

All pipe and fittings shall have an exterior asphaltic coating conforming to the following requirements:

Viscosity, KU at 25 degrees C	56-60
Flashpoint, degrees F (TCC)	40 degrees F Min
Dry set to touch, minutes	6
Dry hard, minutes	22

W-10.14 Force Main Identification

Ductile iron pipe stormwater force main shall be continuously spiral wrapped with 2-inch wide green stick-on vinyl tape prior to installation for permanent identification purposes. The tape shall have a minimum thickness of 6 mils with a minimum tensile strength of 22 pounds per inch and a minimum adhesive factor of 40 ounces per inch. The pipe shall be clean and dry when wrapped.

* * *

SECTION 11 - PVC PIPE GRAVITY

W-11.01 General

All pipe and fittings, 6"-27" nominal diameter, shall be solid wall Polyvinyl Chloride (PVC) Pipe MANUFACTURED to standards as outlined in the following sections.

All references to ASTM Designations shall include Manufacturing (PVC Cell Classification) and Performance (Inspection, Sampling and Testing) Specifications, and the most recent shall govern. Pipe and fittings meeting ONLY the Performance Test Specification will not be acceptable. The minimum nominal diameter for mainline pipe is 8 inches and for laterals is 6 inches. The maximum laying length shall be 13.0 feet.

W-11.02 Standards (6"-15" Diameter)

Solid wall PVC pipe shall comply with ASTM D 3034 and all applicable ASTM documents as covered in Section No. 2 of ASTM D 3034. All pipe and fittings shall be made of PVC plastic having cell classifications as outlined in Section No. 5 "Materials" of ASTM D 3034 and as defined in ASTM D 1784. For depths of cut through 18 feet, a minimum wall thickness of SDR-35 is required. For depths of cut greater than 18 feet, a minimum wall thickness of SDR-26 is required. Fittings shall be either integrally cast (factory molded) or factory solvent welded and a separate section from the mainline pipe. SDR-26 fittings shall be used with SDR-26 pipe.

W-11.03 Standards (18"-27" Diameter)

Solid wall PVC pipe and fittings shall comply with ASTM F 679 and all applicable ASTM documents as covered in Section No. 2 of ASTM F 679. All pipe and fittings shall be made of PVC plastic having cell classifications as outlined in Section No. 4 "Materials" of ASTM F 679 and as defined in ASTM D1784. All pipe and fittings shall meet the wall thickness and cell classification requirements of either T-1 or T-2 of Table 1 "Pipe Dimensions and Minimum Pipe Stiffness" of ASTM F 679. Fittings shall be either integrally cast (factory molded) or factory solvent welded and a separate section from the mainline pipe.

W-11.04 Joints (6"-27" Diameter)

Joints for solid wall PVC pipe and fittings shall be gasket, bell and spigot, push-on type. Joints shall be a molded integral part of the pipe section. Joints or couplings furnished loose shall not be permitted. Solvent cemented joints shall not be permitted. Lubricant shall be as recommended by the pipe manufacturer. (Assembly of gasketed joints is outlined in the Section "Joining of PVC Pipe").

Joints for pipe and for fittings shall comply with ASTM D 3212 "Joints for Drain and Sewer Plastic Pipes Using Flexible Elastomeric Seals." Elastomeric gaskets shall meet the requirements of ASTM F 477. Joints for pipe and fittings shall comply with ASTM D 3034 for 6"-15" diameter, ASTM F 679 for 18"-27" diameter, and ASTM F 1336 for 6"-27" diameter.

W-11.05 Pre-installation Tests, Reports, Markings and Submittals

All 6"-15" pipe and fittings shall be marked per Section No. 12 "Marking" of ASTM D 3034. All 18"-27" pipe and fittings shall be marked per Section 11 "Marking" of ASTM F 679. All required information shall be marked on the pipe. If in code, the markings shall be decoded in writing by letter to the City in advance.

PRIOR TO SHIPMENT of the pipe and fittings to the project site, the Contractor shall submit to the Engineer certifications as described below duly certified by the manufacturer's testing facility or an independent certified testing laboratory demonstrating full compliance with the applicable ASTM specifications described above. Certification from the supplier is not acceptable.

An original plus four (4) copies of the following shall be submitted to the Engineer.

1. The name, address, and phone number of the pipe and fittings manufacturer and the location of the plant at

which they will be manufactured.

2. A letter of certification stating that each lot of pipe used on this project has been manufactured, sampled, tested, and conforms to Section 8 "Test Methods" of ASTM D 3034 for 6"-15" diameter and Section 7 "Test Methods" of ASTM F 679 for 18"-27" diameter pipe. A letter of certification from the fittings manufacturer shall be provided stating that all fittings conform with ASTM D 3034 for 6"-15" diameter, ASTM F 679 for 18"-27" diameter, and ASTM F 1336 for 6"-27" diameter.

W-11.06 Bedding Requirements

Unless otherwise indicated on the Plans, solid wall PVC pipe shall be installed with Class "C" bedding as described in Section W-2 - Backfilling." If soil conforming to subsection W-2.04 "Select Fill Material-Sand" is not excavated at the project site, it shall be imported. Compaction requirements are described in subsection W-2.07 "Bedding Placement for Pipelines." In no case shall a concrete cradle be used. In the event the Plans call for or the Contractor opts to install crushed stone, it shall be NO GREATER THAN a #57 stone.

W-11.07 Post-installation Tests

SCOPE: Prior to final acceptance of the project all PVC pipelines shall be leakage tested, deflection tested, and T.V inspected, all at the expense of the Contractor. The leakage test shall be performed by the Contractor or a Wastewater Department approved test lab after the subbase has been compacted. The Contractor or a Wastewater Department approved test lab shall perform the deflection testing. The deflection test shall be performed a minimum of 7 days after the base has been compacted and sealed. The Contractor shall perform the T.V. inspection only AFTER the pipelines have passed both the leakage and deflection tests.

DEFLECTION TESTING: The PVC pipe/soil system has been designed so that the maximum installed deflection does not exceed 5% or 7-1/2% of the base inside diameter of the pipe as listed in the following table:

INCHES

SDR-35

Nominal Size	Base Inside Diameter	5% Deflection after 7 days Mandrel	7-1/2% Deflection after 30 days Mandrel
8	7.665	7.28	7.09
10	9.563	9.08	8.85
12	11.361	10.79	10.51
15	13.898	13.20	12.86

TYPE T-1

18	16.976	16.13	15.70
21	20.004	19.01	18.50
24	22.480	21.36	20.79
27	25.327	24.06	23.43

SDR-26

Nominal Size	Base Inside Diameter	5% Deflection after 7 days Mandrel	7-1/2% Deflection after 30 days Mandrel

8	7.488	7.11	6.93
10	9.342	8.87	8.64
12	11.102	10.55	10.27
15	13.575	12.90	12.56

TYPE T-2

18	17.054	16.20	15.77
21	20.098	19.09	18.59
24	22.586	21.46	20.89
27	25.446	24.17	23.54

The Contractor shall have the option of testing for 5% deflection after the base has been compacted and sealed for 7 days; or for 7-1/2% deflection after the base has been compacted and sealed for 30 days.

If the pipe fails the 7 day, 5% deflection test, the Contractor shall immediately conduct a 7-1/2% deflection test. If the pipe passes the 7-1/2% deflection test, the Contractor has the option of repairing that section at that time or waiting until a minimum of 30 days after the base has been compacted and sealed and then re-testing for a maximum of 7-1/2% deflection.

If the pipe fails the 7-1/2% deflection test after 7 days or at 30 days, the Contractor shall repair that section immediately.

If the Contractor performs the deflection testing rather than employing an approved test lab, the following shall apply:

The Contractor shall furnish the mandrel, labor, materials, and equipment necessary to perform the tests as approved by the Engineer. The mandrel shall be pulled through by HAND or a HAND operated reel in the presence of the Engineer. Prior to performing the deflection tests, the Contractor shall submit to the Engineer certification that the 9-arm mandrels are preset as stated above. Each mandrel shall be engraved with the following:

Serial Number
Nominal pipe diameter
Either "ASTM D 3034," year and either "SDR-35" or "SDR26"
or "ASTM F 679," year and either "Type T-1" or "Type T-2"
% deflection as stated above.

If the mandrel fails to pass any section of pipe, the Contractor shall excavate and make all repairs necessary to correct the excessive deflection. The Contractor shall then backfill, recompact, and reseal the permanent pavement base, and retest the line. If the mandrel fails to pass a second time, the section shall be replaced. Re-rounding is NOT permitted.

W-11.08 Leakage Testing

The Contractor or a reputable test lab shall perform either an infiltration, exfiltration or an air leakage test as authorized by the Engineer. If the groundwater level is two (2) feet or more above the crown of the pipe, an infiltration test must be performed. The Contractor shall notify the Engineer of the date and time of the test a minimum of 5 days prior to the test.

The infiltration/exfiltration tests shall be performed as described in Section W-18.

AIR TESTING - The minimum time duration permitted for pressure drops of 1.0 psi and 0.5 psi are shown in Tables I and II on the following page and are based on a maximum allowable exfiltration rate of 0.0015 cu. ft./min./sq. ft. of internal pipe surface. Derivations may be found in the Uni-Bell PVC Pipe Association publication: "Recommended Practice for Low-Pressure Air Testing of Installed Sewer Pipe," UNI-B-6-85. (Available from Uni-Bell, 2655 Villa Creek Drive, Suite 155, Dallas, Texas 75234.

The test shall commence after the plugged line has reached a stabilized gauge pressure of 4.0± 1/2 psi. Air testing

equipment shall be arranged so that it is located at the ground surface and shall have an approved air relief arrangement to prevent the sewer from being pressurized to greater than 9.0 psig.

If the pressure drops 1.0 psig (or 0.5 psig) before the appropriate time shown in Table I (Page W11-8) or Table II (Page W11-9) has elapsed, the line has failed. In such case, the Contractor shall structurally repair or replace all defective materials and/or workmanship to the satisfaction of the Engineer.

Sealants are NOT permitted. The completed pipe installation shall then be retested.

The lengths of lateral sewers may be ignored for computing required test times. In the event a test section (mainline and laterals), having a combined total internal surface area less than 625 square feet, fails to pass the air test when laterals have been ignored; the test time may be reduced per Section 9.4 of UNI-B-6-85. If the reduced test time is short enough to allow the section to pass, the computations shall be included with the test results.

W-11.09 Joining of PVC Pipe

The assembly of gasketed joints shall be performed as recommended by the pipe manufacturer. In all cases, clean the gasket and bell, especially the groove area and the spigot area with a rag, brush, or paper towel to remove any dirt or foreign material before the assembly. Lubricant shall be applied as specified by the pipe manufacturer.

Align the spigot to the bell and insert the spigot into the bell until it contacts the gasket uniformly. Apply firm steady pressure either by hand or by bar and block assembly until the spigot easily slips through the gasket.

If undue resistance to insertion of the pipe end is encountered or the reference mark does not position properly, disassemble the joint and check the position of the gasket. If it is twisted or pushed out of its seat ("fish-mounted"), inspect components, repair or replace damaged items, clean the components, and repeat the assembly steps. Be sure both pipe lengths are in concentric alignment. If the gasket was not out of position, verify proper location of the reference mark.

To join field-cut pipe, first square cut the pipe end. Use a factory-finished beveled end as a guide for proper bevel angle and depth of bevel plus the distance to the insertion reference mark. Bevel the end using a pipe beveling tool or a wood rasp which will cut the correct taper. Round off any sharp edges on the leading edge of the bevel.

W-11.10 Joining PVC Pipe to Clay Pipe

The joining of PVC to clay pipe shall be accomplished with flexible compression couplings. Such couplings shall meet the requirements of ASTM Des: C 425 and shall be Series No. 1002 flexible polyvinyl chloride couplings with stainless steel compression bands as manufactured by Fernco Joint Sealer Co., Ferndale, Michigan; Band-Seal couplings as manufactured by Mission Clay Products Corp., Whittier, California; or equal. Installation of flexible couplings shall be done in accordance with the manufacturer's instructions.

After the joint has been completed, any voids in the excavation beneath the coupling shall be thoroughly tamped full of granular fill material to provide a full bearing for the pipe and prevent excessive pressure on the bottom of the joint.

W-11.11 Joining PVC Pipe to Ductile Iron Pipe

The joining of PVC pipe to ductile iron pipe shall be accomplished with rigid PVC C900 x SDR-35 adapter couplings. Such couplings shall be molded of PVC material meeting ASTM D-1784 specifications. Joints shall meet ASTM D-3213 requirements with gaskets conforming to ASTM F-477. The adapter couplings shall be manufactured by Harco, Lynchburg, Virginia, or equal. Installation of rigid couplings shall be done in accordance with the manufacturer's instructions.

After the joint has been completed, any voids in the excavation beneath the coupling shall be thoroughly tamped full of granular fill material to provide a full bearing for the pipe and prevent excessive pressure on the bottom of the joint.

W-11.12 Connection to Manholes

The Contractor will be required to submit a shop drawing, detailing the method of connecting the proposed pipe to the manhole and making it watertight. For connecting PVC pipe, the Contractor shall use a flexible rubber boot, precast into the manhole. The boot shall have stainless steel bands to compress and seal to the proposed pipe or shall be a compression type, such as A-Lock.

Should the flexible rubber boot need to be relocated when connecting to an existing manhole, the Contractor shall perform the connection by one of two methods. The preferred method is to core the manhole and install a rubber boot. The rubber boot shall be manufactured by Kor-n-Seal, or equal. The boot shall be installed and the PVC pipe connection shall be in accordance with the manufacturer's instructions. If the manhole cannot be cored or if the manhole is constructed of brick, the connection shall be made with a PVC manhole adapter which has an exterior impregnated silica surface layer. The adapter shall be manufactured by GPK Products, Inc., Fargo, North Dakota, or equal. The adapter shall be installed and grouted into the manhole wall in accordance with the manufacturer's instructions with non-shrink grout. The PVC pipe shall be inserted through the adapter.

W-11.13 Storage of PVC Pipe

Pipe shall be stored at the job site in unit packages provided by the manufacturer. Caution shall be exercised to avoid compression, damage, or deformation to bell ends of the pipe. When unit packages of PVC pipe are stacked, ensure that the weight of upper units does not cause deformation to pipe in lower units.

PVC pipe unit packages shall be supported by racks or dunnage to prevent damage to the bottom during storage. Supports shall be spaced to prevent pipe bending.

PVC pipe shall not be stored close to heat sources or hot objects such as heaters, boilers, steam line, engine exhaust, etc.

When unit packages of PVC pipe are stacked, ensure that the height of the stack does not result in instability which could cause stack collapse, pipe damage, bodily injury, and property damage.

The interior as well as all sealing surfaces or pipe, fittings, and other accessories shall be kept free from dirt and foreign matter.

Gaskets shall be protected from excessive exposure to heat, direct sunlight, ozone, oil and grease.

W-11.14 Handling of PVC Pipe - Standard Procedures

When using fork lifts or other handling equipment, prevent damage to PVC pipe.

When handling PVC pipe, avoid severe impact blows, abrasion damage and gouging or cutting by metal surfaces or rocks. Avoid stressing bell joints and damage of bevel ends.

Pipe shall be lowered, not dropped, from trucks and into trenches.

In preparation for pipe installation, placement (stringing) of pipe shall be as close to the trench as practical and on the opposite side from excavated earth. Bell ends shall point in the direction of work progress.

The Engineer may reject any pipe that shows visible signs of damage resulting from poor storage and handling practices.

TABLE I

SPECIFICATION TIME REQUIRED FOR A 1.0 PSIG PRESSURE DROP
FOR SIZE AND LENGTH OF PIPE INDICATED FOR Q = 0.0015

Pipe Diameter (in)	Minimum Time (min:sec)	Length for Minimum Time (ft)	Time for Longer Length (sec)	Specification Time for Length (L) Shown (min:sec)							
				100 ft	150 ft	200 ft	250 ft	300 ft	350 ft	400 ft	450 ft
4	3:46	597	.380 L	3:46	3:46	3:46	3:46	3:46	3:46	3:46	3:46
6	5:40	398	.854 L	5:40	5:40	5:40	5:40	5:40	5:40	5:42	6:24
8	7:34	298	1.520 L	7:34	7:34	7:34	7:34	7:36	8:52	10:08	11:24
10	9:26	239	2.374 L	9:26	9:26	9:26	9:53	11:52	13:51	15:49	17:48
12	11:20	199	3.418 L	11:20	11:20	11:24	14:15	17:05	19:56	22:47	25:38
15	14:10	159	5.342 L	14:10	14:10	17:48	22:15	26:42	31:09	35:36	40:04
18	17:00	133	7.692 L	17:00	19:13	25:38	32:03	38:27	44:52	51:16	57:41
21	19:50	114	10.470 L	19:50	26:10	34:54	43:37	52:21	61:00	69:48	78:31
24	22:40	99	13.674 L	22:47	34:11	45:34	56:58	68:22	79:46	91:10	102:33
27	25:30	88	17.306 L	28:51	43:16	57:41	72:07	86:32	100:57	115:22	129:48
30	28:20	80	21.366 L	35:37	53:25	71:13	89:02	106:50	124:38	142:26	160:15
33	31:10	72	25.852 L	43:05	64:38	86:10	107:43	129:16	150:43	172:21	193:53
36	34:00	66	30.768 L	51:17	76:55	102:34	128:12	153:50	179:29	205:07	230:46

TABLE II

SPECIFICATION TIME REQUIRED FOR A 0.5 PSIG PRESSURE DROP
FOR SIZE AND LENGTH OF PIPE INDICATED FOR Q = 0.0015

Pipe Diameter (in)	Minimum Time (min:sec)	Length for Minimum Time (ft)	Time for Longer Length (sec)	Specification Time for Length (L) Shown (min:sec)							
				100 ft	150 ft	200 ft	250 ft	300 ft	350 ft	400 ft	450 ft
4	1:53	597	.190 L	1:53	1:53	1:53	1:53	1:53	1:53	1:53	1:53
6	2:50	398	.427 L	2:50	2:50	2:50	2:50	2:50	2:50	2:51	3:12
8	3:47	298	.760 L	3:47	3:47	3:47	3:47	3:48	4:26	5:04	5:42
10	4:43	239	1.187 L	4:43	4:43	4:43	4:57	5:56	6:55	7:54	8:54
12	5:40	199	1.709 L	5:40	5:40	5:42	7:08	8:33	9:58	11:24	12:50
15	7:05	159	2.671 L	7:05	7:05	8:54	11:08	13:21	15:35	17:48	20:02
18	8:30	133	3.846 L	8:30	9:37	12:49	16:01	19:14	22:26	25:38	28:51
21	9:55	114	5.235 L	9:55	13:05	17:27	21:49	26:11	30:32	34:54	39:16
24	11:20	99	6.837 L	11:24	17:57	22:48	28:30	34:11	39:53	45:35	51:17
27	12:45	88	8.653 L	14:25	21:38	28:51	36:04	43:16	50:30	57:42	46:54
30	14:10	80	10.683 L	17:48	26:43	35:37	44:31	53:25	62:19	71:13	80:07
33	15:35	72	12.926 L	21:33	32:19	43:56	53:52	64:38	75:24	86:10	96:57
36	17:00	66	15.483 L	25:39	38:28	51:17	64:06	76:55	89:44	102:34	115:23

SECTION 15 - LAYING AND JOINTING PIPE FOR FORCE MAINS AND SEWERS

W-15.01 General

The installation, delivery, transportation, unloading, and stringing of pipes, fittings, and accessories for force mains and sewers shall be done in accordance with AWWA C600 for ductile iron pipe and ASTM Des: C 12 for clay and concrete pipe and ASTM D 2321 and pipe manufacturer's recommendations for PVC pipe, as modified or supplemented by the specifications of this section and by the details shown on the Plans.

Proper and suitable tools and appliances for the safe and convenient cutting, handling, and laying of the pipe and fittings shall be used.

Suitable fittings shall be used where shown and at connections where grade or alignment changes require offsets greater than those recommended by the pipe manufacturer.

Pipes and fittings shall be thoroughly cleaned before they are laid and shall be kept clean until they are accepted in the completed work.

All lines shall be closed off with bulkheads when pipe laying is not in progress.

Before being laid, all pipe and specials shall be thoroughly examined for defects, and no piece shall be installed which is known to be defective. If any defective piece should be discovered after having being installed, it shall be removed and replaced with a sound one in a satisfactory manner by the Contractor at his own expense.

Pipe shall be thoroughly cleaned before it is laid and shall be kept clean until it is accepted in the completed work. Special care shall be exercised to avoid leaving bits of wood, dirt, and other foreign particles in the pipe. If any such particles are discovered before the final acceptance of the work, they shall be removed and the pipe cleaned at the Contractor's expense.

Pipe laying for stormwater or wastewater shall begin at the low end of a run and proceed upgrade. Generally, all such pipe shall be laid with bells or grooves pointing uphill. Each pipe shall be carefully placed and checked for line and grade.

Adjustments to bring pipe to line and grade shall be made by scraping away or filling in granular material under the body of the pipe, but in no case by wedging or blocking up the barrel. The faces of the spigot ends and the bells shall be brought into fair contact, and the pipe shall be firmly and completely shoved home. As the work progresses, the interior of the pipelines shall be cleaned of all dirt and superfluous materials of every description. All lines shall be kept absolutely clean during construction. Pipelines shall be laid accurately to line and grade.

Gaskets for pipe joints shall be stored in a cool place and protected from light, sunlight, heat, oil, or grease until installed. Any gaskets showing signs of checking, weathering, or other deterioration will be rejected.

Pipe shall be of the types, sizes, and classes shown on the Plans or as listed in the Contract Items.

Each piece of pipe shall be inspected and cleaned before it is lowered in the trench and any

lumps or projections on the face of the spigot or tongue end or the shoulder shall be cut away. No cracked, broken, or defective pieces shall be used in the work.

Concrete pipe manufactured with a plastic sheet liner shall be laid so that the liner is on the crown of the pipe and placed symmetrically about the vertical centerline of the pipe.

Pipe laying will be permitted only in dry trenches having a stable bottom. Where groundwater is encountered, the Contractor shall make every effort to secure an absolutely dry trench bottom.

If, in the opinion of the Engineer, the Contractor has failed to obtain an absolutely dry trench bottom by improper or insufficient use of all known methods of trench dewatering, the Engineer may then order the Contractor to excavate below grade and place sufficient selected fill material, crushed stone, or Class I concrete over the trench bottom at the Contractor's own expense.

If all efforts fail to obtain this condition and the Engineer determines that the trench bottom is unsuitable for pipe foundation, he will order in writing the kind of stabilization to be constructed.

W-15.02 Transportation and Delivery

Every precaution shall be taken to prevent injury to the pipe during transportation and delivery to the site. Extreme care must be taken in loading and unloading the pipe and fittings. Such work must be done slowly with skids or suitable power equipment, and the pipe shall be under perfect control at all times. Under no condition shall the pipe be dropped, bumped, dragged, pushed, or moved in any way which will cause damage to the pipe or coating. When handling the pipe with a crane, a suitable pipe hook or sling around the pipe shall be used. Under no condition shall the sling be allowed to pass through the pipe unless adequate measures are taken to prevent damage to the pipe ends.

If in the process of transportation, handling, or laying, any pipe or special is damaged, such pipe or pipes shall be replaced or repaired by the Contractor at his own expense.

The Contractor shall furnish and install suitable blocking and stakes so as to prevent the pipe from rolling. The type of blocking and stakes, and the method of installation, shall be approved by the Engineer.

W-15.03 Pipe Laying - Trenches

Pipelines shall be laid in trench excavation on bedding material as specified under the Workmanship and Materials section W-2 headed "Backfilling," Class I concrete cradle or other foundations as shown on the Plans, specified, or ordered in writing by the Engineer. The pipe shall be properly secured against movement and pipe joints shall be made in the excavation as required.

The pipe bedding shall be carefully graded, compacted, and formed to fit the bottom quadrant of the pipe. Bell holes shall be cut out for each joint as required to permit the joint to be properly made and allow the barrel of the pipe to have full bearing throughout its length.

Where pipelines are laid in Class I concrete cradle or encasement, the installation shall conform to the requirements of the Workmanship and Materials section W-14 headed "Pipe Cradles and Encasements."

Pipelines laid on other type foundations shall be installed as specified for such other foundations or as directed in writing by the Engineer.

W-15.04 Lateral Detection Tape

Detectable underground marking tape shall be installed over all laterals from the edge of pavement to the property line. The tape shall be Harris Industries, Inc. encased aluminum foil, or equal. The 2-inch wide tape shall be APWA green and reverse printed bearing the identification of the pipe below (“Sewer” or “Storrm Drain”) it and a warning such as "CAUTION."

The tape shall be buried 4-6 inches. After trench backfilling, the tape shall be placed in the backfill and allowed to settle into place with the backfill.

W-15.05 Mechanical Joints for Ductile Iron Pipe

In making up mechanical joints, the spigot shall be centered in the bell. The surface with which the rubber gasket comes in contact shall be cleaned thoroughly and the gasket shall be washed thoroughly with soapy water just prior to assembly of the joint. The gasket and gland shall be placed in position, the bolts inserted, and the nuts tightened fingertight. The nuts then shall be tightened by means of a torque wrench in such a manner that the gland shall be brought up evenly into the joint. The following range of bolt torques shall be applied:

Bolt Size Inches	Range of Torque Foot-Pounds
5/8	45 - 60
3/4	75 - 90
1	80 - 100
1-1/4	105 - 120

If effective sealing is not obtained at the maximum torque listed above, the joint shall be disassembled and reassembled after a thorough cleaning.

All bolts and nuts shall be field coated with a bituminous coating after assembly of the joint.

W-15.06 Push-on Joints for Ductile Iron Pipe

In making up push-on joints, the gasket seat in the socket shall be cleaned thoroughly and the rubber gasket shall be wiped clean with a cloth. The gasket shall be placed in the socket and a thin film of lubricant shall then be applied to the inside surface of the gasket that will come in contact with the entering pipe. The plain end of the pipe to be entered shall be cleaned thoroughly and placed in alignment with the bell of the pipe to which it is to be joined. The joint shall be made up by exerting sufficient force on the entering pipe so that its plain end is moved past the gasket until it makes contact with the base of the socket.

W-15.07 Joining Clay Pipe

The joining of clay pipe with flexible plastic joints shall be done in accordance with the manufacturer's instructions. The joint surface on both the bell and spigot ends shall be wiped clean and coated with a lubricant furnished by the manufacturer to facilitate assembly. The spigot end

shall be inserted in the bell and pressure applied sufficient to seat the pipe properly. After the joint has been completed, any voids in the excavation beneath the spigot shall be thoroughly tamped full of granular fill material to provide a full bearing for the pipe and prevent excessive pressure on the bottom of the joint.

W-15.08 Joining of PVC Pipe-Gravity

The assembly of gasketed joints shall be performed as recommended by the pipe manufacturer. In all cases clean the gasket and bell, especially the groove area and the spigot area, with a rag, brush or paper towel to remove any dirt or foreign material before the assembly. Lubricant shall be applied as specified by the pipe manufacturer.

Align the spigot to the bell and insert the spigot into the bell until it contacts the gasket uniformly. Apply firm steady pressure either by hand or by bar and block assembly until the spigot easily slips through the gasket.

If undue resistance to insertion of the pipe end is encountered or the reference mark does not position properly, disassemble the joint and check the position of the gasket. If it is twisted or pushed out of its seat ("rolled"), inspect components, repair or replace damaged items, clean the components, and repeat the assembly steps. Be sure both pipe lengths are in concentric alignment. If the gasket was not out of position, verify proper location of the reference mark.

To join field-cut pipe, first square cut the pipe end. Use a factory-finished beveled end as a guide for proper bevel angle and depth of bevel plus the distance to the insertion reference mark. Bevel the end using a pipe beveling tool or a wood rasp which will cut the correct taper. Round off any sharp edges on the leading edge of the bevel.

W-15.09 Joining Concrete Pipe

Before joining concrete pipe using flexible rubber gaskets, the joint surfaces of both the bell and spigot (tongue and groove) ends shall be wiped clean. Any lumps, projections, burrs, or chips which would interfere with the proper compression of the gasket shall be repaired. The spigot or tongue end with the gasket in place and with all surfaces lubricated as recommended by the manufacturer, shall be inserted into the bell or groove. Pressure shall be applied to seat the pipe properly in the bell or groove. Voids under the pipe shall be tamped full of granular material to provide full bearing for the pipe.

Curves for reinforced concrete pipe sewers shall be constructed with standard pipe where the opening of the joint on the outside of the curve is less than 1/2 inch. Where greater opening of the joint would be required, the curves shall be constructed using beveled or radius pipe with standard joints.

Curves for reinforced concrete pressure pipe or prestressed concrete pipe shall be constructed with standard pipe sections, where the opening of the joint on the outside of the curve is less than 1/2 inch, or with beveled pipe, precast elbows or combination of these methods.

W-15.10 Concrete Pipe Rubber Gasket Joints

Rubber gaskets shall be of the O-ring type or equivalent cross section approved by the Engineer. The composition and properties of the gaskets for gravity flow sewers shall meet the

requirements of ASTM Des: C 443.

Composition and properties for concrete pressure pipe gaskets shall meet the requirements of the specifications for the concrete pressure pipe with which the gasket will be used.

In making O-ring rubber gasketed joints, the gasket and the pipe socket shall be lubricated with an approved rubber gasket lubricant, and the gasket shall be stretched over the spigot and placed accurately in position. The tongue or spigot end shall be carefully centered in the socket of the preceding pipe so as to avoid displacement of the gasket, and the pipe shall be drawn home fully compressing the gasket. Adjustments to line and grade shall be made in such a manner that the compressed rubber gasket will not be disturbed. Before proceeding with backfilling, the joint shall be felt completely around to determine whether the gasket is in its proper position. If the gasket can be felt out of place, the pipe shall be withdrawn and the gasket examined for cuts or breaks. If the gasket has been damaged, it shall be replaced with a new one before the pipe is replaced.

Rubber gaskets shall be stored in a cool place and protected from light, sunlight, heat, oil, or grease until installed. Any gaskets showing signs of checking, weathering, or other deterioration will be rejected.

W-15.11 Temporary Bulkheads

At the ends of contract sections, where adjoining pipelines have not been completed, and in connections built into pipelines where adjoining pipelines or structures have not been completed and are not ready to be connected, temporary bulkheads, approved by the Engineer, shall be built. Such bulkheads encountered in connecting sewers or structures included in the Contract, or pipelines or structures previously built, shall be removed by the Contractor when the need for them has passed or when ordered by the Engineer.

W-15.12 Testing

The testing of pipelines shall be done in accordance with the requirements of the Workmanship and Materials section W-18 headed "Leakage Tests."

W-15.13 Joining Clay or PVC Pipe to Ductile Iron Pipe

The joining of clay pipe to ductile iron pipe shall be accomplished with flexible compression couplings. Such couplings shall meet the requirements of ASTM DES: C 425 and shall be Series No. 1002 flexible polyvinyl chloride couplings with stainless steel compression bands as manufactured by Fernco Joint Sealer Co., Ferndale, Michigan; Band-Seal couplings as manufactured by Mission Clay Products Corp., Whittier, California; or approved equal. Installation of flexible couplings shall be done in accordance with the manufacturer's instructions. After the joint has been completed, any voids in the excavation beneath the coupling shall be thoroughly tamped full of granular fill material to provide a full bearing for the pipe and prevent excessive pressure on the bottom of the joint.

The joining of PVC pipe to ductile iron pipe shall be accomplished with rigid PVC C900 x SDR-35 adapter couplings. Such couplings shall be molded of PVC material meeting ASTM D-1784 specifications. Joints shall meet ASTM D-3213 requirements with gaskets conforming to ASTM F-477. The adapter couplings shall be manufactured by Harco, Lynchburg, VA, or equal. Installation of rigid couplings shall be done in accordance with the manufacturer's instructions.

After the joint has been completed, any voids in the excavation beneath the coupling shall be thoroughly tamped full of granular fill material to provide a full bearing for the pipe and prevent excessive pressure on the bottom of the joint.

W-15.14 Connection to Manholes

The Contractor will be required to submit a shop drawing, detailing the method of connecting the proposed pipe to the manhole and making it watertight:

1. For connecting vitrified clay or ductile iron pipe, the Contractor shall use nonshrink grout to seal the opening between the pipe O.D. and manufactured opening in the manhole or flexible rubber boot, precast into the manhole. The boot shall have stainless steel bands to compress and seal to the proposed pipe or shall be a compression type, such as A-Lock.

2. For connecting PVC pipe, the Contractor shall use a flexible rubber boot, precast into the manhole. The boot shall have stainless steel bands to compress and seal to the proposed pipe or shall be a compression type, such as A-Lock. Should the flexible rubber boot need to be relocated or when connecting to an existing manhole, the Contractor shall perform the connection by one of two methods. The preferred method is to core the manhole and install a rubber boot. The rubber boot shall be manufactured by Kor-n-Seal, or equal. The boot shall be installed and the PVCP connection shall be in accordance with the manufacturer's instructions. If the manhole cannot be cored or if the manhole is constructed of brick, the connection shall be made with a PVC manhole adapter which has an exterior impregnated silica surface layer. The adapter shall be manufactured by GPK Products, Inc., Fargo, ND, or equal. The adapter shall be installed and grouted into the manhole wall in accordance with the manufacturer's instructions with nonshrink grout. The PVCP shall be inserted through the adapter.

W-15.15 Joint Grouting

Joints for concrete pipelines using rubber gaskets and steel end rings shall be grouted on the outside with cement mortar composed of one part Type IA portland cement to one part sand by volume. The materials shall be thoroughly mixed to produce a uniform mortar with all aggregate particles well coated.

The joint grouting shall not advance closer than two pipe lengths to the laying operations. In grouting the joint, a cloth diaper shall be used to encase the outside diameter of the bell of the pipe and adequately straddle the joint recess so as to keep out dirt and to serve as a form for grouting. The joint space shall be filled with cement mortar, just thin enough to run around the joint. The diaper is to be left in place permanently. Before the mortar has taken its initial set, the diaper shall be examined, and if not completely filled, additional mortar shall be forced into the joint.

* * *

SECTION 16 - RESTORATION OF STREET PAVEMENTS

W-16.01 General

The various street surfaces disturbed, damaged, or destroyed during the performance of the work under this Contract shall be restored and maintained as shown, specified, and directed. Included in this classification are permanent pavement surfaces of all types, pavement bases, curb, curb and gutter, alleys, driveways, and sidewalks.

The quality of workmanship and materials used in the restoration shall produce a street surface equal to or better than the condition before the work began.

Service boxes, manhole frames and covers, and similar structures not conforming to the new work shall be set to established grade at the Contractor's expense, and no separate payment will be made therefor.

All portland cement and asphaltic concrete pavements shall be removed in rectangular sections with sawed vertical cuts, or to existing joints, as directed by the Engineer. Concrete pavements shall be cut with a concrete saw. Asphaltic concrete pavements one-inch thick or greater shall be cut with a tool having a square neat edge. The edges of adjacent pavement shall be trimmed to straight lines which a roller can follow. Where reinforced concrete pavement is removed, one foot of existing reinforcement on each side of the excavation shall be left exposed and tied to the replaced reinforcing steel.

The equipment necessary for the proper performance of pavement replacement shall be on the site in satisfactory working condition and shall be subject to approval of the Engineer before the work is started.

All replaced concrete pavements shall have a minimum bearing on undisturbed earth outside the line of excavations of at least nine (9) inches.

W-16.02 Standards

The restoration of street pavement shall be performed in strict conformance with the standards relating to equipment, materials, and methods of construction of the authority having jurisdiction over the pavements, unless otherwise specified herein. Pavements to be restored are under the jurisdiction of the several agencies as follows:

1. State Highways are under the jurisdiction of the State of Florida Department of Transportation. Work on such pavements shall conform to the Department of Transportation Standard Specifications for Road and Bridge Construction.

2. City Streets are under the jurisdiction of the City of Tampa Department of Public Works. Work on such pavements shall conform to the Florida Department of Transportation Standard Specifications for Road and Bridge Construction, latest edition, except that densities (including for subgrade) and other testing requirements shall follow current Department of Public Works specifications, and except that Sections 330 and 331 shall be modified as shown in this Section. The type and thickness of pavement, base and stabilization shall be as shown, specified, and directed

by the Engineer.

3. County Roads are under the jurisdiction of the Hillsborough County Engineering Department. Work on such pavements shall conform to County specifications.

All specifications of the several agencies having jurisdiction over pavement restoration work shall be the current issue of such specifications as of the date of the "Notice to Bidders," except as specified otherwise herein.

W-16.03 Temporary Restoration

Upon completion of backfilling, the street or sidewalk surface damaged or destroyed shall be promptly placed in condition for safe temporary use. Temporary work shall be maintained in a suitable and safe condition for traffic until the permanent pavement is laid, or until final acceptance of the work.

Where the area over which existing pavement has been disturbed is to be repaved as part of an overall project by the agency having jurisdiction, any special temporary pavement replacement shall be as specified in the "Specific Provisions."

Pavement surfaces shall be temporarily restored by placing thereon, to proper line, grade and transverse profile, a layer or layers of compacted limerock conforming to all requirements regarding configuration, thickness, and density as detailed in the Plans, specified, and directed by the Engineer. When the compacted thickness of the limerock layer is greater than 6 inches, the base shall be constructed in multiple courses. Each course shall not exceed 6 inches in compacted thickness. Where the existing pavement has a permanent wearing surface, the temporary pavement shall be finished with a suitable grade of asphalt and sand to provide a temporary wearing course and to eliminate dust nuisance.

Curbs, where possible, shall be temporarily reset in place, as part of the work of temporary restoration of pavement.

Damaged or destroyed sidewalks shall be temporarily restored, immediately upon placing of the backfill, by placing a compacted layer of fine crushed limestone, choked with limestone screenings, which shall have a minimum thickness of three inches below the existing finished sidewalk grade.

The temporary pavement shall be maintained by the Contractor and all holes and depressions filled until the permanent pavement is placed.

Limerock or shell placed in areas where the existing pavement is shell, limerock, crushed stone, or other similar material and is classed as nonpermanent pavement, will not be measured for separate payment. Placement of limerock or shell as nonpermanent pavement replacement will be included for payment under the various classified Unit Price Contract Items for pipelines.

Temporary sand and asphalt wearing courses placed on limerock base on which a permanent pavement surface will be constructed shall be incidental to the permanent pavement base work, and no separate payment will be made therefor.

Limestone screenings for temporary sidewalk surface shall be incidental to sidewalk

replacement, and no separate payment will be made therefor.

Limerock base placed in areas to receive a permanent pavement surface will be measured for payment under the appropriate Contract Item for permanent pavement base.

W-16.04 Preparation of Temporary Pavement for Permanent Pavement Replacement

After due notice and within the time specified, the temporary limerock pavement shall be prepared as the base to receive the new permanent pavement surface.

Prior to construction of the pavement base, the City will furnish the Contractor with the preconstruction survey notes for the streets disturbed by construction. The Contractor shall use these notes in bringing the base installed to grade allowing for the permanent pavement surface to be constructed.

The preparation of the base shall consist of bringing the area to be replaced to a grade conforming to the required grade and cross section, of uniform density, ready to receive the permanent pavement. This is to be accomplished by excavating or backfilling as needed, shaping, watering as required, or permitting to dry to proper consistency, and rolling the entire area with an approved self-propelled roller weighing not less than eight tons. Shaping and rolling shall be continued until the base has been properly prepared and shows that no further compaction of any practical benefit would result from continued rolling. The base shall be tested as to cross section, crown, and elevation. After being properly prepared, it shall be so maintained until the permanent pavement is constructed. Any part of the base area not accessible to the roller shall be thoroughly compacted by hand or by mechanical compaction in a manner acceptable to the Engineer. Preparation shall include sawing, cutting and trimming edges of existing pavements to provide a neat, uniform edge to abut the new pavement.

After completion of the base, the Contractor shall furnish the Engineer with survey notes verifying the base has been constructed to grade. Upon approval, payment will be made for permanent pavement base.

W-16.05 Certification for Limerock for Pavement Base

The Contractor shall furnish notarized certifications from all suppliers of limerock stating that all limerock supplied for use as pavement base conforms to the requirements of the applicable sections of the Florida Department of Transportation Standard Specifications for Road and Bridge Construction.

W-16.06 Permanent Pavement Base Densities

Permanent base material shall be installed and compacted to the required densities (98% modified proctor) in layers not exceeding six inches.

W-16.07 Permanent Pavement Surface Restoration

Permanent restoration of pavement shall be pavement of the type and thickness detailed in the Plans, Specific Provisions, or as directed by the Engineer.

If the existing type of pavement is classified as nonpermanent pavement, the temporary

restoration shall be reworked and completed and left in a condition at least equivalent to the existing nonpermanent pavement.

W-16.08 Replacement of Curb, Curb and Gutter, Sidewalk and Driveways

All permanent restoration of street curb or curb and gutter shall be of the same type and thickness as the curb or curb gutter which abuts. The grade of the restored curb and curb and gutter shall conform with the grade of the existing adjacent curb or curb and gutter.

Except as otherwise specified herein or detailed in the Plans, all permanent restoration of driveways and sidewalks shall conform to the manner of construction as originally placed and to the lines and grades as given by the Engineer. No patching of concrete driveway areas will be allowed between joints or dummy joints.

Where sidewalks are replaced, the replacement shall be the full width of the walk and minimum lengths shall be 60 inches. Restoration of adjacent lawn is incidental to sidewalk replacement, and no separate payment will be made therefor.

W-16.09 Replacement of Traffic Markings and Signalization Loops

The Contractor shall furnish all labor, equipment and materials to replace, test and maintain all traffic markings (temporary and permanent) and signalization loops removed or damaged by pipeline construction and appurtenance work as shown on the Plans, specified and directed by the Engineer.

The replacement of traffic markings (temporary and permanent), signalization loops and all appurtenant work shall be replaced by the Contractor in kind.

It shall be the Contractor's responsibility to field verify before construction begins all markings and signalization loops to be replaced.

All traffic markings and signalization loops shall conform to the Workmanship and Materials standards set forth in the latest edition of the Florida Department of Transportation Standard and Supplemental Specifications.

Payment for the replacement of temporary and permanent traffic markings, signalization loops and all appurtenant work shall be included in the unit bid price for Permanent Pavement Surface Replacement, Asphaltic Concrete, and no separate payment shall be made therefor.

W-16.10 Hot Bituminous Mixtures (Section 330) Type S Asphaltic Concrete (Section 331)

This Subsection shall Replace and/or Modify Portions of F.D.O.T. Standard Specifications for Road and Bridge Construction (2007) Sections 330, 331 and 334.

SECTION 330 HOT BITUMINOUS MIXTURES

All references to the CITY OF TAMPA shall mean the local agency. All references to the Engineer shall mean the designated Engineer of the local agency. Any incorrect references to FDOT specifications, test methods, or standards should be brought to the attention of the Engineer for clarification.

330-1 Description. Construct plant-mixed hot bituminous pavements and bases. Establish and maintain a quality control system that provides assurance that all materials, products and completed construction submitted for acceptance meet Contract requirements.

330-1.1 General: Meet the requirements of Section 320 for plant and equipment, and meet the general construction requirements of Section 330. The Engineer will accept the work based on one of the following methods as described in 334-5 and 334-6:

1) Asphalt Work Category 1,
2) Asphalt Work Category 2,
3) Asphalt Work Category 3

330-1.2 Quality Control/Acceptance Testing: The contractor's submittal of documentation for quality control testing may be waived by the Engineer; however, the contractor shall not be exempt from implementing quality control procedures regarding material and workmanship. The local agency shall perform the quality acceptance testing, or utilize a licensed private testing laboratory of the Engineer's choice.

SECTION 331 TYPE S ASPHALTIC CONCRETE

331-1 Description.

331-1.1 General: Construct a Type S Hot Mix Asphalt (HMA) pavement course as specified by the Contract. The general composition and physical test properties for all mixes shall be met per F.D.O.T Standard Specifications for Road and Bridge Construction. Meet the applicable requirements for plants, equipment, and construction requirements.

Where Type S Asphalt Concrete is specified in the Contract, if approved by the Engineer, the equivalent fine Type SP Asphalt Concrete mixture (Traffic Level C) meeting the requirements of Section 334 may be selected as an alternate at no additional cost to the Department. The equivalent mixes are as follows:

Type S-I…….. ……Type SP-12.5
Type S-II…….……Type SP-19.0
Type S-III……... Type SP-9.5

Meet the requirements for plant and equipment specified in Section 320. Meet the general construction requirements specified in Section 330.

331-1.2 Layer Thicknesses:

331-1.2.1 Structural Layers: The allowable layer thicknesses for Type S Asphalt Concrete mixtures used in structural and overbuild applications is as follows:

Type S-III…….. 3/4 – 1 1/4 inches [20 – 30 mm]
Type S-I……. 1 1/4 – 2 1/2 inches [30 – 60 mm]
Type S-II…… 2 – 2 3/4 inches [50 – 70 mm]

In addition to the minimum and maximum thickness requirements, the following restrictions are placed on Type S mixtures when used as a structural course:

Type S-III – Limited to the final (top) structural layer, one layer only.
Type S-I – May not be used in the first layer of courses over 3 1/2 inches [90 mm] thick, nor in the first layer of courses over 2 3/4 inches [70 mm] thick on limited access

facilities.

Type S-II – May not be used in the final (top) structural layer.

331-1.2.2 Additional Requirements: The following requirements also apply to Type S Asphalt Concrete mixtures:

1. A minimum 1 1/2 inch [40 mm] initial lift is required over an Asphalt Rubber Membrane Interlayer (ARMI).

2. When construction includes the paving of adjacent shoulders (#5 feet [#1.5 m] wide), the layer thickness for the upper pavement layer and shoulder shall be the same and paved in a single pass, unless shown differently in the plans.

3. All overbuild layers shall be Type S asphalt concrete. Use the minimum and maximum layer thicknesses as specified in 331-1.2.1 unless shown differently in the plans. On variable thickness overbuild layers, the minimum allowable thickness may be **reduced by 1/2 inch (13 mm), and the maximum allowable thickness may be increased 1/2** inch (13 mm), unless shown differently in the plans. Other variations from these thicknesses must be approved by the Engineer.

331-4 General Composition of Mixture.

331-4.3 Mix Design: Prior to the production of any asphalt mixture, obtain the Engineer's conditional approval of the mix design. If required by the Engineer, send representative samples of all component materials, including asphalt binder to a laboratory designated by the Engineer for verification. The Engineer will consider any marked variations from original test data for a mix design or any evidence of inadequate field performance of a mix design as sufficient evidence that the properties of the mix design have changed, and at his discretion, the Engineer may no longer allow the use of the mix design. Furnish the following information:

1. The specific project on which the mixture will be used.

2. The source and description of the materials to be used.

3. The gradation and approximate proportions of the raw materials as intended to be combined in the paving mixture. The gradation of the component materials shall be representative of the material at the time of use.

4. A single percentage of the combined mineral aggregate passing each specified sieve. Degradation of the aggregate due to processing (particularly No. 200 [75 μm]) should be accounted for and identified for the applicable sieves.

5. A single percentage of asphalt by weight of total mix intended to be incorporated in the completed mixture, shown to the nearest 0.1%. For structural mixes (S-I, S-II and S-III) establish the optimum asphalt content at a level corresponding to a minimum of 4.5% air voids. For FC-3 mixes, establish optimum asphalt content at a level corresponding to a minimum of 5.0% air voids.

6. A single temperature at which the mixture is intended to be discharged from the plant.

7. The laboratory density of the asphalt mixture for all mixes except Open-Graded Friction Courses.

8. Evidence that the completed mixture will meet all specified physical requirements.

9. The name signature dated of the individual responsible for the Quality Control of the mixture during production.

331-4.4 Contractor Quality Control: Assume full responsibility for controlling all operations and processes such that the requirements of these Specifications are met at all times. Perform any tests necessary at the plant and roadway for quality control purposes.

331-5 Acceptance Procedures:

331-5.1 General Construction Requirements: shall meet same requirements as 334-5 General Construction Requirements (with exception to requirements regarding SP spread rates, unless specified by the Engineer).

331-6 Acceptance of the Mixture: shall meet same requirements as 334-6 Acceptance of the Mixture (with exception to Table 334-3 to be replaced with Table 331-6).

Table 331-6 Tolerances for Acceptance Tests	
Characteristic	Tolerance
Asphalt Binder Content	±0.55%
Passing No. 4 [4.75 mm] sieve	±7.00%
Passing No. 10 [2.00 mm] sieve	±5.50%
Passing No. 40 [425 µm] sieve*	±4.50%
Passing No. 200 [75 µm] sieve	±2.00%
*Applies only to Types S-I, S-II, S-III, and FC-3.	

331-7 Acceptance of the Mixture at the Roadway: shall meet same requirements as 334-6 Acceptance of the Mixture (with exception to Table 334-3 shall be replaced with Table 331-6).

Table 334-7 Roadway Density Acceptance Values	
Characteristic	Tolerance
Roadway Density (average of three cores)	92.0% G_{mm} (proposed mix design)
Roadway Density (avg. of 5 tests nuclear method)	95.0% G_{sb} (proposed mix design)
Roadway Density (avg. of 5 tests nuclear method)	96.0 % G_{sb} (lab density)

SECTION 334 SUPERPAVE ASPHALT CONCRETE

334-1 Description.

334-1.1 General: Construct a Type SP Hot Mix Asphalt (HMA) pavement based on the type of work specified in the Contract and the Asphalt Work Categories as defined below. Meet the applicable requirements for plants, equipment, and construction requirements as defined below. Use a HMA mix that meets the requirements of this specification.

334-1.2 Asphalt Work Mix Categories: Construction of Hot Mix Asphalt Pavement will fall into one of the following work categories:

334-1.2.1 Asphalt Work Category 1: Includes the construction of bike paths.

334-1.2.2 Asphalt Work Category 2: Includes the construction of new HMA turn lanes, paved shoulders and other non-mainline pavement locations.

334-1.2.3 Asphalt Work Category 3: Includes the construction of new mainline HMA pavement lanes, milling and resurfacing.

334-1.3 Mix Types: Use the appropriate HMA mix as shown in Table 334-1.

Table 334-1 HMA Mix Types		
Asphalt Work Category	Mix Types	Traffic Level
1	Type SP-9.5 , or equivalent as determined by the Engineer	A

2	Type SP-9.5, SP-12.5, or equivalent as determined by the Engineer	B or C
3	Type SP-9.5, SP-12.5	C

A Type SP mix one traffic level higher than the traffic level specified in the Contract may be substituted, at no additional cost (i.e. Traffic Level B may be substituted for Traffic Level A, etc.).

334-1.4 Gradation Classification: HMA mixes are classified as either coarse or fine, depending on the overall gradation of the mixture. Coarse and fine mixes are defined in 334 3.2.2. Use only fine mixes.

The equivalent AASHTO nominal maximum aggregate size Superpave mixes are as follows:

Type SP-9.5……... 9.5 mm
Type SP-12.5…….. 12.5 mm

334-1.5 Thickness: The total pavement thickness of the HMA Pavement will be based on a specified spread rate or plan thickness as shown in the Contract Documents. Before paving, propose a spread rate or thickness for each individual layer meeting the requirements of this specification, which when combined with other layers (as applicable) will equal the plan spread rate or thickness. When the total pavement thickness is specified as plan thickness, the plan thickness and individual layer thickness will be converted to spread rate using the following equation:

$$\text{Spread rate (lbs/yd}^2) = t \times G_{mm} \times 43.3$$

where: t = Thickness (in.) (Plan thickness or individual layer thickness)
G_{mm} = Maximum specific gravity from the mix design

For target purposes only, spread rate calculations shall be rounded to the nearest whole number.

334-1.5.1 Layer Thicknesses: Unless otherwise called for in the Contract Documents, the allowable layer thicknesses for HMA mixtures are as follows:

Type SP-9.5…… 3/4 - 1 1/2 inches
Type SP-12.5……...1 1/2 - 2 1/2 inches

334-1.5.2 Additional Requirements: The following requirements also apply to HMA mixtures:

1. When construction includes the paving of adjacent shoulders (≤5 feet wide), the layer thickness for the upper pavement layer and shoulder shall be the same and paved in a single pass, unless otherwise called for in the Contract Documents.

2. For overbuild layers, use the minimum and maximum layer thicknesses as specified above unless called for differently in the Contract Documents. On variable thickness overbuild layers, the minimum allowable thickness may be reduced by 1/2 inch, and the maximum allowable thickness may be increased by 1/2 inch, unless called for differently in the Contract Documents.

334-1.6 Weight of Mixture: The weight of the mixture shall be determined as provided in 320 2.2 of the Florida Department of Transportation (FDOT) specifications.

334-2 Materials.

334-2.1 Superpave Asphalt Binder: Unless specified elsewhere in the Contract or in 334-2.3.3, use a PG 67 22 asphalt binder from the FDOT Qualified Products List (QPL).

334-2.2 Aggregate: Use aggregate capable of producing a quality pavement. For Category 2 and 3 projects, require the aggregate supplier to certify that the material meets FDOT requirements.

334-2.3 Reclaimed Asphalt Pavement (RAP) Material:

334-2.3.1 General requirements: RAP may be used as a component of the asphalt mixture if approved by the Engineer. Usage of RAP is subject to the following requirements:

1. Limit the amount of RAP material used in the mix to a maximum of 50 percent by weight of total aggregate.
2. Do not use RAP material in any friction course mixes.
3. Provide stockpiled RAP material that is reasonably consistent in characteristics and contains no aggregate particles which are soft or conglomerates of fines.
4. Provide RAP material having a minimum average asphalt content of 4.0 percent by weight of total mix. The Engineer may sample the stockpile to verify that this requirement is met.
5. Use a grizzly or grid over the RAP cold bin, in-line roller crusher, screen, or other suitable means to prevent oversized RAP material from showing up in the completed recycle mixture. If oversized RAP material appears in the completed recycle mix, take the appropriate corrective action immediately. If the appropriate corrective actions are not immediately taken, stop plant operations.

334-2.3.2 Material Characterization: Assume responsibility for establishing the asphalt binder content, gradation, viscosity and bulk specific gravity (Gsb) of the RAP material based on a representative sampling of the material.

334-2.3.3 Asphalt Binder for Mixes with RAP: Select the appropriate asphalt binder grade based on Table 334 2. Maintain the viscosity of the recycled mixture within the range of 4,000 to 12,000 poises.

Table 334-2
Asphalt Binder Grade for Mixes Containing RAP

Percent RAP	Asphalt Binder Grade
<20	PG 67-22
20 – 29	PG 64-22
≥ 30	Recycling Agent

334-3 Composition of Mixture.

334-3.1 General: Compose the asphalt mixture using a combination of aggregates, mineral filler, if required, and asphalt binder material. Size, grade and combine the aggregate fractions to meet the grading and physical properties of the mix design. Aggregates from various sources may be combined.

334-3.2 Mix Design:

334-3.2.1 General: Design the asphalt mixture in accordance with AASHTO R35 04, except as noted herein. Submit the proposed mix design with supporting test data indicating compliance with all mix design criteria to the Engineer. Prior to the production of any asphalt mixture, obtain the Engineer's conditional approval of the mix design. If required by the Engineer, send representative samples of all component materials, including asphalt binder to a

laboratory designated by the Engineer for verification. The Engineer will consider any marked variations from original test data for a mix design or any evidence of inadequate field performance of a mix design as sufficient evidence that the properties of the mix design have changed, and at his discretion, the Engineer may no longer allow the use of the mix design.

334-3.2.2 Mixture Gradation Requirements: Combine the aggregates in proportions that will produce an asphalt mixture meeting all of the requirements defined in this specification and conform to the gradation requirements at design as defined in AASHTO M323 04, Table 3. Aggregates from various sources may be combined.

334-3.2.2.1 Mixture Gradation Classification: Plot the combined mixture gradation on an FHWA 0.45 Power Gradation Chart. Include the Control Points from AASHTO M323 04, Table 3, as well as the Primary Control Sieve (PCS) Control Point from AASHTO M323 04, Table 4. Fine mixes are defined as having a gradation that passes above or through the primary control sieve control point. Use only fine mixes

334-3.2.3 Gyratory Compaction: Compact the design mixture in accordance with AASHTO T312 04. Use the number of gyrations as defined in AASHTO R35 04, Table 1.

334-3.2.4 Design Criteria: Meet the requirements for nominal maximum aggregate size as defined in AASHTO M323 04, as well as for relative density, VMA, VFA, and dust-to-binder ratio as specified in AASHTO M323 04, Table 6.

334-3.2.5 Moisture Susceptibility: Test 4 inch specimens in accordance with FM 1 T 283. Provide a mixture having a retained tensile strength ratio of at least 0.80 and a minimum tensile strength (unconditioned) of 100 psi. If necessary, add a liquid anti-stripping agent from the FDOT's Qualified Products List, or hydrated lime in order to meet these criteria.

In lieu of moisture susceptibility testing, add a liquid anti-stripping agent from the FDOT Qualified Products List. Add 0.5% liquid anti-stripping agent by weight of binder.

334-3.2.6 Additional Information: In addition to the requirements listed above, provide the following information on each mix design:

1. The design traffic level and the design number of gyrations (N_{design}).
2. The source and description of the materials to be used.
3. The FDOT source number and the FDOT product code of the aggregate components furnished from an FDOT approved source (if required).
4. The gradation and proportions of the raw materials as intended to be combined in the paving mixture. The gradation of the component materials shall be representative of the material at the time of use. Compensate for any change in aggregate gradation caused by handling and processing as necessary.
5. A single percentage of the combined mineral aggregate passing each specified sieve. Degradation of the aggregate due to processing (particularly material passing the No. 200 sieve) should be accounted for and identified.
6. The bulk specific gravity (G_{sb}) value for each individual aggregate and .
7. A single percentage of asphalt binder by weight of total mix intended to be incorporated in the completed mixture, shown to the nearest 0.1 percent.
8. A target temperature at which the mixture is to be discharged from the plant and a target roadway temperature. Do not exceed a target temperature of 330°F for modified asphalts and 315°F for unmodified asphalts.
9. Provide the physical properties achieved at four different asphalt binder contents. One shall be at the optimum asphalt content, and must conform to all specified physical requirements.
10. The name of the Mix Designer.
11. The ignition oven calibration factor.

334-4 Contractor Quality Control.

Assume full responsibility for controlling all operations and processes such that the requirements of these Specifications are met at all times. Perform any tests necessary at the plant and roadway for quality control purposes.

334-5 General Construction Requirements.

334-5.1 Weather Limitations: Do not transport asphalt mix from the plant to the roadway unless all weather conditions are suitable for the laying operations.

334-5.2 Limitations of Laying Operations:

334-5.2.1 General: Spread the mixture only when the surface upon which it is to be placed has been previously prepared, is intact, firm, and properly cured, and is dry.

334-5.2.2 Air Temperature: Spread the mixture only when the air temperature in the shade and away from artificial heat is at least 40ºF for layers greater than 1 inch (100 lb/yd^2) in thickness and at least 45ºF for layers 1 inch (100 lb/yd^2) or less in thickness (this includes leveling courses). The minimum temperature requirement for leveling courses with a spread rate of 50 lb/yd^2 or less is 50ºF.

334-5.3 Mix Temperature: Heat and combine the ingredients of the mix in such a manner as to produce a mixture with a temperature at the plant and at the roadway, within a range of ±30ºF from the target temperature as shown on the mix design. Reject all loads outside of this range.

334-5.4 Transportation of the Mixture: Transport the mixture in vehicles previously cleaned of all foreign material. After cleaning, thinly coat the inside surface of the truck bodies with soapy water or an asphalt release agent as needed to prevent the mixture from adhering to the beds. Do not allow excess liquid to pond in the truck body. Do not use diesel fuel or any other hazardous or environmentally detrimental material as a coating for the inside surface of the truck body. Cover each load at all times.

334-5.5 Preparation of Surfaces Prior to Paving:

334-5.5.1 Cleaning: Clean the surface of all loose and deleterious material by the use of power brooms or blowers, supplemented by hand brooming where necessary.

334-5.5.2 Patching and Leveling Courses: Where the HMA is to be placed on an existing pavement which is irregular, wherever the plans indicate, or if directed by the Engineer, bring the existing surface to proper grade and cross-section by the application of patching or leveling courses.

334-5.5.3 Application over Surface Treatment: Where an asphalt mix is to be placed over a surface treatment, sweep and dispose of all loose material from the paving area.

334-5.5.4 Tack Coat: Apply a tack coat on existing pavement structures that are to be overlaid with an asphalt mix and between successive layers of all asphalt mixes, unless directed otherwise by the Engineer. Use a tack coat product meeting FDOT specifications. Use an emulsified tack coat spread rate of 0.02 to 0.08 gal/sy or as specified by the Engineer.

334-5.6 Paving:

334-5.6.1 Alignment of Edges: With the exception of pavements placed adjacent to curb and gutter or other true edges, place all pavements by the stringline method to obtain an accurate, uniform alignment of the pavement edge. Control the unsupported pavement edge to ensure that it will not deviate more than ± 1.5 inches from the stringline.

334-5.6.2 Rain and Surface Conditions: Immediately cease transportation of asphalt mixtures from the plant when rain begins at the roadway. Do not place asphalt mixtures while rain is falling, or when there is water on the surface to be covered. Once the rain has stopped

and water has been removed from the tacked surface to the satisfaction of the Engineer and the temperature of the mixture caught in transit still meets the requirements as specified in 334-5.3, the Contractor may then place the mixture caught in transit.

334-5.6.3 Checking Depth of Layer: Check the depth of each layer at frequent intervals, and make adjustments when the thickness exceeds the allowable tolerance. When making an adjustment, allow the paving machine to travel a minimum distance of 32 feet to stabilize before the second check is made to determine the effects of the adjustment.

334-5.6.4 Hand Spreading: In limited areas where the use of the spreader is impossible or impracticable, spread and finish the mixture by hand.

334-5.6.5 Spreading and Finishing: Upon arrival, dump the mixture in the approved paver, and immediately spread and strike-off the mixture to the full width required, and to such loose depth for each course that, when the work is completed, the required weight of mixture per square yard, or the specified thickness, is secured. Carry a uniform amount of mixture ahead of the screed at all times.

334-5.6.6 Thickness of Layers: Construct each course of Type SP mixtures in layers of the thickness shown in 334-1.5.1.

334-5.7 Leveling Courses:

334-5.7.1 Patching Depressions: Before spreading any leveling course, fill all mixture, and compact thoroughly.

334-5.7.2 Spreading Leveling Courses: Place all courses of leveling with an asphalt paver or by the use of two motor graders, one being equipped with a spreader box. Other types of leveling devices may be used upon approval by the Engineer.

334-5.7.3 Rate of Application: When using Type SP-9.5 (fine graded) for leveling, do not allow the average spread of a layer to be less than 50 lb/yd^2 or more than 75 lb/yd^2. The quantity of mix for leveling shown in the plans represents the average for the entire project; however, the Contractor may vary the rate of application throughout the project as directed by the Engineer. When leveling in connection with base widening, the Engineer may require placing all the leveling mix prior to the widening operation.

334-5.8 Compaction: For each paving or leveling train in operation, furnish a separate set of rollers, with their operators.

When density testing for acceptance is required (Asphalt Work Category 3) to meet the specified density requirement, select equipment, sequence, and coverage of rolling. Regardless of the rolling procedure used, complete the final rolling before the surface temperature of the pavement drops to the extent that effective compaction may not be achieved or the rollers begin to damage the pavement.

When density testing for acceptance is not required (Asphalt Work Categories 1 and 2), use a rolling pattern approved by the Engineer.

Use hand tamps or other satisfactory means to compact areas which are inaccessible to a roller, such as areas adjacent to curbs, headers, gutters, bridges, manholes, etc.

334-5.9 Joints.

334-5.9.1 Transverse Joints: Construct smooth transverse joints, which are within 3/16 inch of a true longitudinal profile when measured with a 15 foot manual straightedge.

334-5.9.2 Longitudinal Joints: For all layers of pavement except the leveling course, place each layer so that longitudinal construction joints are offset 6 to 12 inches laterally between successive layers. Do not construct longitudinal joints in the wheelpaths. The Engineer may waive these requirement where offsetting is not feasible due to the sequence of construction.

334-5.10 Surface Requirements: Construct a smooth pavement with good surface texture and the proper cross-slope.

334-5.10.1 Texture of the Finished Surface of Paving Layers: Produce a finished surface of uniform texture and compaction with no pulled, torn, raveled, crushed or loosened portions and free of segregation, bleeding, flushing, sand streaks, sand spots, or ripples. Correct any area of the surface that does not meet the foregoing requirements in accordance with 334-5.10.4.

334-5.10.2 Cross Slope: Construct a pavement surface with cross slopes in compliance with the requirements of the Contract Documents.

334-5.10.3 Pavement Smoothness: Construct a smooth pavement meeting the requirements of this Specification. Furnish a 15 foot manual and a 15 foot rolling straightedge meeting the requirements of FM 5-509. Make them available at the job site at all times during paving operations for Asphalt Work Category 3 and make them available upon request of the Engineer for Asphalt Work Categories 1 and 2.

334-5.10.3.1 Asphalt Work Category 3:

334-5.10.3.1.1 Acceptance Testing: Straightedge the final Type SP structural layer and friction course layer with a rolling straightedge. Test all pavement lanes where the width is constant using a rolling straightedge and document all deficiencies on a form approved by the Engineer. Notify the Engineer of the location and time of all straightedge testing a minimum of 48 hours before beginning testing.

334-5.10.3.1.2 Rolling Straightedge Exceptions: Testing with the rolling straightedge will not be required in the following areas: intersections, tapers, crossovers, parking lots and similar areas. In addition, testing with the rolling straightedge will not be performed on the following areas when they are less than 50 feet in length: turn lanes, acceleration/deceleration lanes and side streets. However, correct any individual surface irregularity in these areas that deviates from the plan grade in excess of 3/8 inch as determined by a 15 foot manual straightedge, and that the Engineer deems to be objectionable, in accordance with 334-5.10.4. The Engineer may waive or modify straightedging requirements if no milling, leveling, overbuild or underlying structural layer was placed on the project and the underlying layer was determined to be exceptionally irregular.

334-5.10.3.1.3 Final Type SP Structural Layer: Straightedge the final Type SP structural layer with a rolling straightedge behind the final roller of the paving train. Correct all deficiencies in excess of 3/16 inch in accordance with 334-5.10.4.2, and retest the corrected areas.

334-5.10.3.1.4 Friction Course Layer: At the completion of all paving operations, straightedge the friction course. Correct all deficiencies in excess of 3/16 inch in accordance with 334-5.10.4.3. Retest all corrected areas.

334-5.10.3.2 Asphalt Work Categories 1 and 2: If required by the Engineer, straightedge the final structural layer with a rolling straightedge, either behind the final roller of the paving train or as a separate operation. Correct all deficiencies in excess of 5/16 inch in accordance with 334-5.10.4.2. Retest all corrected areas. If the Engineer determines that the deficiencies on a bicycle path are due to field geometrical conditions, the Engineer will waive corrections with no deduction to the pay item quantity.

334-5.10.4 Correcting Unacceptable Pavement:

334-5.10.4.1 General: Correct all areas of unacceptable pavement at no additional cost.

334-5.10.4.2 Structural Layers: Correct deficiencies in the Type SP structural

layer by one of the following methods:

a. Remove and replace the full depth of the layer, extending a minimum of 50 feet on either side of the defective area for the full width of the paving lane.

b. Mill the pavement surface to a depth and width that is adequate to remove the deficiency. (This option only applies if the structural layer is not the final surface layer.)

334-5.10.4.3 Friction Course: Correct deficiencies in the friction course layer by removing and replacing the full depth of the layer, extending a minimum of 50 feet on either side of the defective area for the full width of the paving lane. Corrections may be waived if approved by the Engineer.

334-6 Acceptance of the Mixture.

334-6.1 General: The asphalt mixture will be accepted based on the Asphalt Work Category as defined below:

1) Asphalt Work Category 1 – Certification by the Contractor as defined in 334-6.2.
2) Asphalt Work Category 2 – Certification and quality control testing by the Contractor as defined in 334-6.3
3) Asphalt Work Category 3 – Quality control testing by the Contractor and acceptance testing by the Engineer as defined in 334-6.4.

334-6.2 Certification by the Contractor: On Asphalt Work Category 1 construction, the Engineer will accept the mix on the basis of visual inspection. Submit a Notarized Certification of Specification Compliance letter on company letterhead to the Engineer stating that all material produced and placed on the project was in substantial compliance with the Specifications. The Engineer may run independent tests to determine the acceptability of the material.

334-6.3 Certification and Quality Control Testing by the Contractor: On Asphalt Work Category 2 construction, submit a Notarized Certification of Specification Compliance letter on company letterhead to the Engineer stating that all material produced and placed on the project was in substantial compliance with the Specifications, along with supporting test data documenting all quality control testing as described in 334-6.3.1. If so required by the Contract, utilize an Independent Laboratory as approved by the Engineer for the quality control testing. The mix will also require visual acceptance by the Engineer. In addition, the Engineer may run independent tests to determine the acceptability of the material.

334-6.3.1 Quality Control Sampling and Testing Requirements: Perform quality control testing at a frequency of once per day. Obtain the samples in accordance with FDOT Method FM 1 T 168. Test the mixture at the plant for gradation (P-8 and P-200) and asphalt binder content (P_b). Test the mixture on the roadway for density using six-inch diameter roadway cores obtained at a frequency of three cores per day or by Nuclear Density Method if approved by Engineer.

Determine the asphalt content of the mixture in accordance with FM 5 563. Determine the gradation of the recovered aggregate in accordance with FM 1 T 030. Determine the roadway density in accordance with FM 1 T 166 or with FM 1-T 238. The minimum roadway density will be based on the percent of the maximum specific gravity (G_{mm}) from the approved mix design. If the Contractor or Engineer suspects that the mix design G_{mm} is no longer representative of the asphalt mixture being produced, then a new G_{mm} value will be determined from plant-produced mix with the approval of the Engineer. Roadway density testing will not be required in certain situations as described in 334-6.4.1. Assure that the asphalt content, gradation and density test results meet the criteria in Table 334-3.

Table 334-3

Quality Control and Acceptance Values	
Characteristic	Tolerance
Asphalt Binder Content (percent)	Target ± 0.55
Passing No. 8 Sieve (percent)	Target ± 6.00
Passing No. 200 Sieve (percent)	Target ± 2.00
Roadway Density (average of three cores	91.5% G_{mm}
Roadway Density (any single core)	90.0 % G_{mm}
Roadway Density (any single core)	90.0 % G_{mm}
Roadway Density (avg. of 5 tests nuclear method if approved by Engineer)	91.5% G_{mm}

334-6.4 Quality Control Testing by the Contractor and Acceptance Testing by the Engineer: On Asphalt Work Category 3, perform quality control testing as described in 334-6.3.1. In addition, the Engineer will accept the mixture at the plant or at the site with respect to gradation (P-8 and P-200) and asphalt binder content (P_b). The mixture will be accepted on the roadway with respect to density. The Engineer will sample and test the material as described in 334-6.3.1. The Engineer will randomly obtain at least one set of samples per day. Assure that the asphalt content, gradation and density test results meet the criteria in Table 334-3. Material failing to meet these acceptance criteria will be addressed as directed by the Engineer.

334-6.4.1 Acceptance Testing Exceptions: When the total quantity of any mix type in the Project is less than 200 tons, or on Asphalt Work Category 1 construction, the Engineer will accept the mix on the basis of visual inspection. The Engineer may run independent tests to determine the acceptability of the material.

Density testing for acceptance will not be performed on widening strips or shoulders with a width of 5 feet or less, variable thickness overbuild courses, leveling courses, first lift of asphalt base course placed on subgrade, miscellaneous asphalt pavement, or any course with a specified thickness less than 1 inch or a specified spread rate less than 100 lbs/sy. In addition, density testing for acceptance may not be performed on the following areas when they are less than 100 feet in length: crossovers, intersections, turning lanes, acceleration lanes, deceleration lanes, or ramps. Compact these courses in accordance with a standard rolling procedure approved by the Engineer. In the event that the rolling procedure deviates from the approved procedure, placement of the mix will be stopped.

334-7 Method of Measurement.

For the work specified under this Section, the quantity to be paid for will be the weight of the mixture, in tons.

The bid price for the asphalt mix will include the cost of the liquid asphalt or the asphalt recycling agent and the tack coat application as specified in 334-5.5.4. There will be no separate payment or unit price adjustment for the asphalt binder material in the asphalt mix.

334-8 Basis of Payment.

334-8.1 General: Price and payment will be full compensation for all the work specified under this Section.

SECTION 17 - LAWN REPLACEMENT

W-17.01 General

The Contractor shall replace all lawn areas which have been removed or damaged due to construction. Lawn replacement includes fine grading the areas to be restored and furnishing and placing topsoil, fertilizer, sod, sprigs, seeding, and maintaining all areas. Grassing and mulching or sodding lawn areas will be required as directed. Grassing shall be accomplished by seeding.

Sod shall be Argentine Bahia, St. Augustine, or other approved native grass sod, and shall be well matted with grass roots. It shall be sufficiently thick to secure a dense stand of live grass, with a minimum thickness of 2 inches. The sod shall be live, fresh and uninjured, and shall contain sufficient moisture at the time of planting to induce growth. The type and quality of sod shall be approved by the Engineer before placing.

Grass seed shall be Argentine Bahia, 60 #/acre from March 1 to November 1; 50 #/acre with 20 #/acre of rye grass seed from November 1 to March 1. Argentine Bahia seed shall be a scarified seed having a minimum active germination of 40% and total of 85%.

Mulch material shall be free of weeds and shall be oat straw or rye, Pangola, peanut, Coastal Bermuda or Bahia grass hay.

W-17.02 Topsoil

Where areas are to be restored by sodding, topsoil shall be placed to a minimum compacted depth of 2 inches over the subgrade. Where areas are to be restored by grassing, topsoil shall be placed to a minimum compacted depth of 4 inches over the subgrade. All topsoil shall be suitable excavated topsoil which has been segregated or other topsoil material approved by the Engineer. Topsoil shall be free from stones, roots, sticks, or other foreign substances.

W-17.03 Water

The Contractor shall furnish at his own expense all water required for lawn replacement and maintenance of the work until final acceptance.

W-17.04 Construction Methods

Prior to sodding or grassing, the Contractor shall fine grade the subgrade to 4 inches below finished grade. Topsoil shall be spread over the subgrade to a uniform depth and density. Topsoil shall be uniformly compacted by a light hand roller weighing between 250 and 750 pounds to the specified depths for sodding or grassing.

After the surface has been properly prepared, the sod shall be placed and firmly embedded by light tamping. Additionally, dolomite (lime) shall be applied at a rate of 2 tons per acre if required for pH control.

Immediately after the sod has been planted, if the soil does not contain sufficient moisture to ensure growth, water shall be applied twice daily for the first week, once in the morning or late evening and once at approximately 2:00 P.M. Water shall then be applied once a day over the next 2 weeks and alternating days for an additional 2 weeks. If rooting has not taken place by the end of

the third week, 1 daily watering shall continue until sod is firmly rooted.

One month after the sod has been planted, a complete fertilizer with a 14-14-14 or 15-0-15 fertilizer with minor elements shall be applied at the rate of 16 pounds per 1,000 square foot. The ground shall not be wet when the fertilizer is applied but will be immediately watered after application of the fertilizer to remove it from the leaf area.

Prior to grassing, 14-4-14 or 15-0-15 fertilizer shall be applied to the soil at the rate of approximately 300 pounds per acre. Grass seed at the specified rate per acre shall then be raked into the soil and covered with mulching material. The area shall then be thoroughly rolled with approved equipment.

After the grass has been planted, if the soil does not contain sufficient moisture to ensure growth, water shall be applied as directed by the Engineer. After the grass has started growing, fertilizer shall be applied uniformly over the area weekly, at a rate of 0.5 pounds nitrogen and potash per 1,000 square feet, until turf cover the area. The fertilizer shall not be applied unless the surface of the ground or sod is sufficiently moist to quickly dissolve the fertilizer.

W-17.05 Caretaking

The Contractor shall keep all replaced lawn areas in good, healthy, insect free, moist condition by watering, replanting or resodding, weeding, fertilizing, and cutting as specified, and directed by the Engineer.

* * *

SECTION 70 - SEWER LINE CLEANING

W-70.01 Intent

The intent of sewer line cleaning is to remove foreign materials from the lines and restore the sewer to a minimum of 95% of the original carrying capacity or as required for proper seating of internal pipe joint sealing packers. Since the success of the other phases of work depends a great deal on the cleanliness of the lines, the importance of this phase of the operation is emphasized. It is recognized that there are some conditions such as broken pipe and major blockages that prevent cleaning from being accomplished or where additional damage would result if cleaning were attempted or continued. Should such conditions be encountered, the Contractor will not be required to clean those specific manhole sections. If in the course of normal cleaning operations, damage does result from preexisting and unforeseen conditions such as broken pipe, the Contractor will not be held responsible.

W-70.02 Cleaning Equipment

(a) Hydraulically Propelled Equipment: The equipment used shall be of a moveable dam type and be constructed in such a way that a portion of the dam may be collapsed at any time during the cleaning operation to protect against flooding of the sewer. The moveable dam shall be equal in diameter to the pipe being cleaned and shall provide a flexible scraper around the outer periphery to ensure removal of grease. If sewer cleaning balls or other equipment which cannot be collapsed is used, special precautions to prevent flooding of the sewers and public or private property shall be taken.

(b) High-Velocity Jet (Hydrocleaning) Equipment: All high-velocity sewer cleaning equipment shall be constructed for ease and safety of operation. The equipment shall have a selection of two or more high-velocity nozzles. The nozzles shall be capable of producing a scouring action from 15 to 45 degrees in all size lines designated to be cleaned. Equipment shall also include a high-velocity gun for washing and scouring manhole walls and floor. The gun shall be capable of producing flows from a fine spray to a solid stream. The equipment shall carry its own water tank, auxiliary engines, pumps, and hydraulically driven hose reel.

(c) Mechanically Powered Equipment: Bucket machines shall be in pairs with sufficient power to perform the work in an efficient manner. Machines shall be belt operated or have an overload device. Machines with direct drive that could cause damage to the pipe will not be allowed. A power rodding machine shall be either a sectional or continuous rod type capable of holding a minimum of 750 feet of rod. The rod shall be specifically heat-treated steel. To ensure safe operation, the machine shall be fully enclosed and have an automatic safety clutch or relief valve.

W-70.03 Cleaning Precautions

During sewer cleaning operations, satisfactory precautions shall be taken in the use of cleaning equipment. When hydraulically propelled cleaning tools (which depend upon water pressure to provide their cleaning force) or tools which retard the flow in the sewer line are used, precautions shall be taken to ensure that the water pressure created does not damage or cause flooding of public or private property being served by the sewer. When possible, the flow of sewage in the sewer shall be utilized to provide the necessary pressure for hydraulic cleaning devices. When additional water from hydrants is necessary to avoid delay in normal work

procedures, the water shall be conserved and not used unnecessarily. No fire hydrant shall be obstructed in case of a fire in the area served by the hydrant.

W-70.04 Sewer Cleaning

The designated sewer manhole sections shall be cleaned using hydraulically propelled, high-velocity jet, or mechanically powered equipment. Selection of the equipment used shall be based on the conditions of lines at the time the work commences. The equipment and methods selected shall be satisfactory to the Engineer. The equipment shall be capable of removing dirt, grease, rocks, sand, and other materials and obstructions from the sewer lines and manholes. If cleaning of an entire section cannot be successfully performed from one manhole, the equipment shall be set up on the other manhole and cleaning again attempted. If, again, successful cleaning cannot be performed or the equipment fails to traverse the entire manhole section, it will be assumed that a major blockage exists and the cleaning effort shall be abandoned.

W-70.05 Root Removal

Roots shall be removed in the designated sections where root intrusion is a problem. Special attention should be used during the cleaning operation to assure almost complete removal of roots from the joints. Any roots which could prevent the seating of the packer or could prevent the proper application of chemical sealants shall be removed. Procedures may include the use of mechanical equipment such as rodding machines, bucket machines and winches using root cutters and porcupines, and equipment such as high-velocity jet cleaners. Chemical root treatment may be used at the option of the Contractor.

W-70.06 Chemical Root Treatment

To aid in the removal of roots and at the option of the Contractor, manhole sections that have root intrusion may be treated with an approved herbicide. The application of the herbicide to the roots shall be done in accordance with the manufacturer's recommendations and specifications in such a manner to preclude damage to surrounding vegetation. Any damaged vegetation so designated by the Engineer shall be replaced by the Contractor at no additional cost to the City. All safety precautions as recommended by the manufacturer shall be adhered to concerning handling and application of the herbicide. Suggested herbicide is Sanifoam or equal.

W-70.07 Material Removal

All sludge, dirt, sand, rocks, grease, and other solid or semisolid material resulting from the cleaning operation shall be removed at the downstream manhole of the section being cleaned. Passing material from manhole section to manhole section, which could cause line stoppages, accumulations of sand in wet wells, or damage pumping equipment, shall not be permitted.

W-70.08 Disposal of Materials

All solids or semisolids resulting from the cleaning operations shall be removed from the site and disposed of at a site designated by the Engineer. All materials shall be removed from the site no less often than at the end of each workday. Under NO circumstances will the Contractor be allowed to accumulate debris, etc., on the site of work beyond the stated time, except in totally enclosed containers and as approved by the Engineer.

W-70.09 Final Acceptance

Acceptance of sewer line cleaning shall be made upon the successful completion of the television inspection and shall be to the satisfaction of the Engineer. If TV inspection shows the cleaning to be unsatisfactory, the Contractor shall be required to reclean and reinspect the sewer line until the cleaning is shown to be satisfactory. In areas where television inspection is not performed, the Engineer may require the Contractor to pull a double squeegee (with each squeegee the same diameter as the sewer) through each manhole section as evidence of adequate cleaning. If internal sealing is to follow the television inspection, particular attention should be given to the adequacy of the cleaning to ensure that proper seating of the sealing packer can be achieved.

* * *

SECTION 112 - TREES, PLANTS, AND GROUNDCOVERS

PART 1 - GENERAL

1.1 DESCRIPTION OF WORK:

Furnish all materials, equipment and labor as necessary for preparation of planting areas, soil treatment, planting of trees, shrubs, groundcovers and grass, relocation of designated plants, protection of plants, maintenance, guarantee and replacement of plants, and related items as required to complete the work as indicated on the drawings and specified herein.

1.2 DEFINITIONS:

A. The following words and terms or pronouns used instead shall wherever they appear in these specifications, be construed as follows, unless a different meaning is clear from the context:

"Final Acceptance" shall mean that point in time when all requirements of project drawings and specifications are completed, including any punch list items, to the satisfaction of the Engineer. The contractor shall be notified in writing of final acceptance by the Engineer.

"Warranty Period" shall be a one year period beginning at Final Acceptance.

"Maintenance Period" shall begin when plant material is installed and continue for thirty (30) days after notification of Final Acceptance.

"Final Maintenance Inspection" shall occur at the end of the thirty (30) day maintenance period.

1.3 QUALITY ASSURANCE:

A. The landscape installation shall be by a single firm specializing in landscape work.

B. Plant names indicated shall comply with "Standardized Plant Names" as adopted by the latest edition of the American Joint Committee of Horticultural Nomenclature. Names of varieties not listed shall conform generally with names accepted by the nursery trade. Provide stock true to botanical name and legibly tagged.

C. Comply with sizing and grading standards of the latest edition of "American Standard for Nursery Stock" (ANSI Z60 1) and, sizing and grading standards of the latest edition of "Grades and Standards for Nursery Plants: Part I and II" by the Florida Department of Agriculture and Consumer Services. All plant material shall be "Florida No. 1" or better.

1. Caliper measurement shall be taken six (6) inches above ground level if four (4) inches or less. If greater than 4 (four) inches, caliper measurement will be taken at twelve (12) inches above ground level.

D. Do not make substitutions. If specified landscape material is not obtainable submit to the Engineer in writing, proof of non-availability and proposal for use of equivalent material.

E. All plants shall be nursery grown and 100% acclimatized to local planting conditions.

F. Stock furnished shall be at least the minimum size indicated. Larger stock is acceptable, at no additional

cost, and providing that the larger plants will not be cut back to size indicated. Provide plants indicated by two measurements so that only a maximum of 25% are of the minimum size indicated and 75% are of the maximum size indicated. Height and spread specified will prevail over container size specified, for groundcover and shrub material only.

G. All trees will be inspected and approved by the Engineer at the place of growth, for compliance with specification requirements for quality, size, and variety. When trees cannot be obtained locally, provide sufficient photographs of the proposed plants for approval.

1. Approval shall not impair the right of inspection and rejection upon delivery at the site or during the progress of the work.

2. Tag trees at the source of supply prior to inspection by the Engineer.

1.4 SUBMITTALS:

A. Submit planting schedule showing scheduled dates for each type of planting in each area of site two weeks prior to beginning work.

B. Submit certificates of inspection, as required by governmental authorities; and manufacturers or vendors certified analysis for soil amendments, herbicides, insecticides and fertilizer materials; submit other data substantiating that materials comply with specified requirements.

C. Submit the following material samples:

1. Mulch
2. Topsoil with verification of sterilization and source.
3. One typical sample of each shrub and groundcover material as specified, prior to planting for approval.

a. Such approval shall not impair the right of inspection and rejection upon delivery at the site or during the progress of the work.

D. Upon final acceptance of plant material, submit two (2) written maintenance instructions recommending procedures for maintenance of plant materials for a one year period.

E. Provide landscape planting as-built drawings:

1. Legibly mark drawings to record actual installation.

2. Identify field changes of dimension and detail and changes made as directed by the Engineer.

1.5 DELIVERY, STORAGE AND HANDLING:

A. Deliver fertilizer materials in original, unopened, and undamaged containers showing weight, analysis, and name of manufacturer. Store in manner to prevent wetting and deterioration.

B. Trees must be held and fully acclimatized over a period not less than eight (8) weeks prior to delivery to site.

C. Take all precautions customary in good trade practice in preparing plants for moving. Workmanship that fails to meet the highest standards will be rejected. Spray deciduous plants in foliage with an

approved "Anti-Desiccant" immediately prior to digging to prevent dehydration. Dig, pack, transport, and handle plants with care to ensure protection against injury. Inspection certificates required by law shall accompany each shipment invoice or order. Upon arrival, the certificate shall be submitted to the Engineer. Protect all plants from drying out. If plants cannot be planted immediately upon delivery, properly protect them with soil, wet peat moss, or in a manner acceptable to the Engineer. Water heeled-in plantings daily. No plant shall be bound with rope or wire in a manner that could damage or break the branches.

D. Plant material that is stored improperly shall receive a special review established on a case by case basis.

E. Cover plants transported on open vehicles with a protective covering to prevent wind burn.

F. Topsoil shall be kept dry and loose for planting bed mixes.

G. Label at least one (1) tree and one (1) shrub of each variety with a securely attached waterproof tag bearing legible designation of botanical and common names.

1.6 JOB CONDITIONS:

A. Work notification: Notify the Engineer at least seven (7) working days prior to installation of plant material. All plant samples shall be reviewed for approval prior to notification.

B. Protect existing utilities, paving and other facilities from damage caused by landscaping operations. Notify any affected utilities 48 hours prior to beginning work, if applicable.

C. A complete list of plants, including a schedule of sizes, quantities, and other requirements are shown on the drawings. In the event that quantity discrepancies or material omissions occur in the plant materials list, the planting plans shall govern.

D. Examine the subgrade, verify the elevations, observe the conditions under which work is to be performed, and examine unsatisfactory conditions before proceeding with the work.

1. When conditions detrimental to plant growth are encountered such as rubble fill, adverse drainage conditions or obstructions, notify the Engineer before planting to determine alternative action.

2. Contractor shall be responsible for the removal of existing vegetation deemed necessary by the Engineer to carry out the scope of the project.

E. The irrigation system shall be installed prior to planting, if applicable. Locate, protect and maintain the irrigation system during planting operations. Repair irrigation system components, new and existing, damaged during planting operations. Test system prior to installation of plant material.

F. Any work taking place along a city, county or state road or median must comply with appropriate regulating authorities guidelines for "Traffic Controls for Construction and Maintenance Operations". Contractor shall be responsible to file and obtain any and all required agency permits.

PART 2 - PRODUCTS

2.1 MATERIALS:

A. Plants: Provide plants typical of their species or variety; with normal, densely-developed branches and vigorous, fibrous root systems. Provide only sound, healthy vigorous plants free from defects, disfiguring knots, sunscald injuries, frost cracks, abrasion of the bark, plant diseases, insect eggs, borers, and all forms of infestation. All plants shall have a fully developed form without voids and open spaces.

1. All plant material shall be "Florida No. 1", or better.

2. Dig balled and burlapped plants with firm, natural balls of earth of diameter and depth to encompass the fibrous and feeding root system necessary for full recovery of the plant. Provide ball sizes complying with the latest edition of the "American Standard for Nursery Stock". Cracked or mushroomed balls are not acceptable.

3. Container-grown stock: Grown in container for sufficient length of time for the root system to have developed to hold its soil together, firm and whole.

   a. No plants shall be loose in container.
   b. Container stock shall not be pot bound.

4. Trees that have the main trunk forming a "Y" shape are not acceptable. Trees shall have a minimum of five (5) feet of trunk free from branching, unless otherwise specified.

5. Sanding of palm tree trunks will not be accepted. Palm tree fronds shall be tied up to protect the bud from stress and damage. Fronds shall be tied with a material that will decompose naturally.

6. Plants planted in rows shall be matched in form.

7. Plants larger than those specified in the plant list may be used when approved by the Engineer.

   a. If the use of larger plants is acceptable, increase the spread of roots or root ball in proportion to the size of the plant.

8. The height of the tree, measured from the crown of the roots to the average height of the top of the tree, shall not be less than the minimum size designated in the plant list. Container size designated, if any, shall be the minimum size required.

9. No pruning wounds shall be present with a diameter of more than 1" and such wounds must show vigorous bark on all edges.

10. Height and spread requirements, of shrub and groundcover material, indicated in the plant list shall prevail over container size indicated, unless otherwise specified.

11. Shrubs and small plants shall conform to the following standards:

    a. The measurements for height shall be taken from the ground level to the average height of the top of the plant and not the longest branch.
    b. Single stemmed or thin plants will not be accepted.

    c. Side branches shall be generous, well-twigged, and the plant as a whole well-bushed to the ground, unless otherwise specified.

    d. Plants shall be in a vigorous condition, free from dead wood, bruises, or other root or

branch injuries.

12. Any plant material showing signs of shock will be judged on a case by case basis for acceptance or rejection.

2.2 ACCESSORIES:

A. Refer to drawings and other portions of specifications for accessories specifically used on this project.

PART 3 - EXECUTION

3.1 INSPECTION:

Contractor shall examine proposed planting areas and conditions for installation. Do not start planting work until unsatisfactory conditions are corrected.

3.2 PREPARATION:

A. Time of planting.

1. Deciduous material: If deciduous trees are planted in-leaf, they shall be sprayed with an anti-desiccant prior to planting operation.

B. Planting shall be performed only by experienced workmen familiar with planting procedures under the supervision of a qualified supervisor.

C. Layout individual tree and shrub locations and areas for multiple plantings. Stake locations and outline areas, then secure the Engineer's acceptance before start of planting work. Give 24 hour notice for inspection. If obstructions are encountered that are not shown on the drawings, do not proceed with planting operations until alternate plant locations have been selected. Verify locations of existing utilities.

D. Excavate circular plant pits with vertical sides, except for plants specifically indicated to be planted in beds. Provide shrub pits at least 12" greater than the diameter of the root system and 3 times greater than diameter of rootball for trees. Depth of pit shall accommodate the root system. Scarify the bottom of the pit to a depth of 4". Remove excavated materials from the site, as specified and directed by the Engineer.

E. Provide pre-mixed planting mixture for use around the balls and roots of the plants consisting of topsoil and 1/2 lb. plant fertilizer as specified, for each cu. yd. of mixture.

F. Provide pre-mixed ground cover bed planting mixture consisting of topsoil and 1/2 lb. plant fertilizer as specified, per cu. yd. Provide beds a minimum of 8" deep. Excavate groundcover beds 4" deep, add planting mixture and fill to a depth of 8". If slopes are greater than 4 to 1 increase depth to 12".

G. Palm trees with clear trunk greater than six (6) feet in height shall be backfilled with soil indigenous to the site.

3.3 INSTALLATION:

A. Set plant material in the planting pit to proper grade and alignment. Set plants upright, plumb, and

faced to give the best appearance or relationship to each other or adjacent structure. Set plant material 2-3" above the finished grade. No filling will be permitted around trunks or stems. Backfill the pit with half indigenous soil to the site and half planting mixture until approximately 2/3 full, then water thoroughly before placing remainder of backfill. Repeat watering until no more is absorbed. Do not use muddy mixtures for backfilling. Form a ring of soil around the edge of each planting pit to retain water.

After balled and burlapped plants are set, place soil mixture around bases of balls and fill all voids.

1. Remove all burlap, ropes, and wires from the tops of balls.

B. Space groundcover plants in accordance with indicated dimensions. Adjust spacing as necessary to evenly fill planting bed with indicated quantity of plants. Plant to within 4" of the trunks of trees and shrubs within planting bed and to within 6" edge of bed.

C. Care of Existing Trees:

1. All existing trees, if any, shall be protected through the duration of this project as outlined in the Tree Protection Standards of the City of Tampa Site Clearing Ordinance. These requirements and those attached at the end of this section are available in the City Hall Annex Building, 3rd floor east, Duplication Office for a fee.

D. Tree Relocation:

1. Tree relocation shall be performed under the supervision of the City Arborist.

3.4 MAINTENANCE:

A. Begin maintenance immediately after planting. Maintain all plant material until final acceptance and for an establishment period of thirty (30) days after final acceptance.

B. Maintenance shall include but is not limited to pruning, cultivating, mowing, weeding, fertilizing, watering, and application of appropriate insecticides and fungicides necessary to maintain plants free of insects and disease.

1. Re-set settled plants to proper grade and position. Restore planting saucer and adjacent material and remove dead material.

2. Tighten and repair guy wires and stakes as required.

3. Correct defective work immediately after deficiencies become apparent and weather permits.

4. In addition to irrigation system, water trees every other day saturating the soil to a depth of three (3) feet for the first two (2) weeks. If no irrigation system exists, water plant material per the following schedule:

1-30 days - water every other day, saturating the soil to a depth of three (3) feet.

30-90 days - water twice a week, saturating the soil to a depth of three (3) feet.

90-365 days - water once a week, saturating the soil to a depth of three (3) feet.

Quantity of water applied should be adjusted in accordance to rainfall.

3.5 ACCEPTANCE:

A. Inspection to determine acceptance of planted areas will be made by the Engineer upon Contractor's request. Provide notification at least five (5) working days before requested inspection date.

1. Planted areas will be accepted provided all requirements, including maintenance, have been complied with and plant materials are alive and in a healthy, vigorous condition.

B. The Engineer will prepare a "punch list" of those items which must be corrected before reinspection for final acceptance. The Engineer will determine an appropriate time period in which punch list items must be corrected. Provide 48 hour notification of need for reinspection.

C. The City will assume plant maintenance 30 days after final acceptance, at which time, the contractor shall request a final maintenance inspection for acceptance, where requirements as stated in 3.5 apply.

3.6 WARRANTY:

A. Warrant plant material to remain alive and be in a healthy, vigorous condition for a period of one (1) year after completion and final acceptance of entire project.

B. Replace, in accordance with the drawings and specifications, all plants that are dead or as determined by the Engineer to be in an unhealthy or unsightly condition, and have lost their natural shape due to Contractor's negligence. The cost of such replacement(s) shall be at Contractor's expense. Warrant all replacement plants for one (1) year after final acceptance.

C. Warranty shall not include damage or loss of trees, plants, or groundcovers caused by fires, floods, freezing, rains, lightning storms or winds over 75 miles per hour, winter kill caused by extreme cold and severe winter conditions not typical of planting area; and acts of vandalism.

D. Remove and replace immediately all plants found to be dead or in unhealthy condition as determined by the Engineer at any time during warranty period. Make replacements within four (4) weeks of notification.

1. An inspection will be conducted at the end of the warranty period. Contractor will replace any plants found to be dead or in poor condition at this time within four (4) weeks of inspection. Contractor will also remove any tree bracing or guying determined by the Engineer to be unnecessary at this point in the tree's development.

3.7 CLEANING

Perform cleaning during installation of the work and upon completion of work. Remove from site all excess materials, soil, debris, and equipment. Repair damage resulting from planting operations.

* * *

SECTION 113 – DISPOSAL OF DEBRIS

W-113.01 General

The Contractor shall furnish all labor, materials and equipment required to transport and dispose of debris removed from all pipelines and structures to an approved facility at the Contractor's expense. Any permits required for the hauling and disposing of materials shall be obtained by the Contractor at their expense.

W-113.02 Scope of Work

The Contractor will have the following responsibilities:

a. Be solely responsible to handle, transport, test, permit and dispose of debris in accordance with all applicable regulatory requirements.

b. For transportation between project site and disposal site.

c. To apply for, pay fees and obtain all required environmental or transportation permits prior to handling debris. Permitting agencies include, but are not limited to, EPA, DER, DOT, Hillsborough County, City of Tampa and Expressway Authority.

d. To perform all necessary tests as required by permit and all applicable regulatory requirements.

e. To select a disposal site and acquire approval from the disposal site owner for disposal of debris. The Contractor is responsible to pay all applicable disposal fees.

SECTION 425 - STORMWATER INLETS, MANHOLES AND JUNCTION BOXES

W-425.01 General

The work specified in this section consists of the construction of inlets, manholes, junction boxes, shoulder gutter inlets, and yard drains. These structures shall be of reinforced concrete, or may be of brick masonry if circular and constructed in place, and shall include the necessary metal frames and gratings. The work under this section shall also include the adjustment of those structures shown in the plans to be adjusted or which are required to be adjusted for the satisfactory completion of the work. The new structures shall be constructed in conformity with the plans and in accordance with these specifications and the latest City of Tampa Stormwater Standard Details.

W-425.02 Composition and Proportioning

Concrete: Unless otherwise shown in the plans, all concrete for these structures shall be Class II as specified in the latest FDOT Standard Specifications Section 346, except Section 346.6.1.

Mortar: The mortar for brick masonry shall be of portland cement and sand, mixed in the proportions of one part cement to two parts of sand. Miami Oolitic rock screenings may be substituted for the sand upon prior approval of the Engineer. All the materials shall pass the No. 8 Sieve, and be uniformly graded from coarse to fine. At the option of the Contractor, hydrated lime, in an amount not to exceed ten percent of the amount of cement used, may be added to the mortar.

As an alternate to the above, masonry cement may be used in lieu of the above-specified mortar provided that it is delivered in packages properly identified by brand name of manufacturer, net weight of package, and whether it is Type 1 or Type 2, and further provided that it has not been in storage for a period greater than six months. Hydrated lime shall not be used with masonry cement.

The sand and cement shall be thoroughly mixed dry in proper boxes or mortar mixers and such quantity of clean fresh water added as will provide a stiff mortar of the proper consistency. The whole mass shall be thoroughly mixed until used. Any mortar that has set shall not be retempered in any way, and no mortar shall be used more than one and one-half (1-1/2) hours after mixing.

W-425.03 Gratings

Gratings and frames fabricated from structural steel shall be Zinc (hot-dip galvanized) Coatings on Iron and Steel Products, in accordance with the requirements of ASTM A123. These requirements do not apply when A-588 steel is used.

When Alternate "G" grates are specified, the chain, bolt, nuts, and cold shuts shall be galvanized after fabrication in accordance with the requirements of ASTM A153.

W-425.04 Forms

Forms shall be of wood or metal, so designed and constructed that they may be removed without injury to the concrete. They shall be built true to line and grade and braced in a substantial and unyielding manner, and shall be approved by the Engineer before being filled with concrete.

W-425.05 Precast Inlets, Manholes, and Junction Boxes

Careful attention shall be given to the proper construction or reconstruction of the pavement adjacent to the gutters and at street intersections to obtain satisfactory drainage to the inlets from the intersecting streets.

The Contractor may request to substitute precast inlets, manholes, and junction boxes in lieu of cast-in-place units unless otherwise shown in the plans or directed by the Engineer. At locations not so restricted, the Contractor shall carefully examine the plan details at each structure to determine if use of a precast unit is feasible. The design and fabrication of precast units shall be in accordance with the standard index drawings, which may allow use of designs other than those detailed in the standard index drawings.

Smooth welded wire fabric may be substituted for deformed re-bar or welded deformed wire reinforcement in non-circular precast drainage structures provided the following requirements are met:

1. The smooth welded wire fabric shall comply with ASTM A-185.

2. Substitution of equal areas of smooth wire fabric for the reinforcing steel and provided the width and length of the unit is four times the width of the spacing of the cross wires.

3. Wire shall be continuous around the box and spliced at a quarter point of one side with an overlap of not less than the spacing of the cross wires plus two inches.

W-425.06 Construction Methods

Excavation: Excavation shall comply with the requirements specified in Section 1.

Placing and Curing Concrete: The concrete shall be placed in the forms, to the depth shown in the plans and thoroughly vibrated. After the concrete has hardened sufficiently, it shall be covered with suitable material approved by the Engineer, and kept moist for a period of three days.

Setting Manhole Castings: After the concrete has been cured as specified above, the frame of the casting shall be set in a full mortar bed composed of one part portland cement to two parts of fine aggregate.

Reinforcing Steel: The construction methods for the steel reinforcement shall be as specified in Section 6.

Laying Brick: All brick shall be saturated with water before being laid. The brick shall be laid by the shovejoint method so as to bond them thoroughly into the mortar. Headers and stretchers shall be so arranged as to bond the mass thoroughly. Joints shall be finished properly as the work progresses and shall be not less than 1/4 inch or more than 3/4 inch in thickness. No spalls or bats shall be used except for shaping around irregular openings or when unavoidable at corners.

The inside of the brick masonry walls shall be plastered uniformly with cement mortar one-half (1/2) inch in thickness mixed in proportions of one part of cement and two parts of clean, sharp sand.

Placing Pipe: Inlet and outlet pipes shall be of the same size and kind as the connecting pipe

shown in the plans. They shall extend through the walls for a distance beyond the outside surface sufficient for the intended connections, and the concrete shall be constructed around them neatly so as to prevent leakage along their outer surface. The inlet and outlet pipes shall be flush with the inside of the wall.

Backfilling: Backfilling shall conform with the requirements specified in Section 2.

Adjusting Existing Structures: Existing manholes, catch basins, inlets, valve boxes, monument boxes, etc., within the limits of the proposed work, that do not conform to the finished grade of the proposed pavement, or to the finished grade designated on the plans for such structures, shall be cut down or extended, and made to conform to the grade of the new pavement, or to the designated grade of the structure if outside of the proposed pavement area. The materials and construction methods for this work shall conform to the requirements specified above.

Where manholes are to be raised, the adjustment may, at the Contractor's option, be made by the use of adjustable extension rings of the type which do not require the removal of the existing manhole frame. The extension device shall provide positive locking action and shall permit adjustment in height as well as diameter. The particular type of device used shall meet the approval of the Engineer.

Adjusting Structures: When an item of payment for adjusting manholes, valve boxes, inlets, or monument boxes is provided in the proposal, the number of such structures designated to be paid for under separate items, and which are satisfactorily adjusted, shall be paid for at the contract units prices each for Adjusting Inlets, Adjusting Manholes, Adjusting Valve Boxes, and Adjusting Monument Boxes.

For any of such types of these structures required to be adjusted but for which no separate item of payment is shown in the proposal for the specific type, payment shall be made under the item of Adjusting Miscellaneous Structures.

W-425.07 Drainage Structures

1. All inlets, manholes, and junction boxes shall, unless otherwise directed by the Engineer, be constructed as per design plans and applicable design standards. All manholes shall be Traffic Bearing type. It shall be the responsibility of the Contractor to assure that the designated sizes of the drainage structures meet the following criteria:

    a. The minimum distance from the top of the opening for the highest pipe to the bottom of the top slab shall be ten inches (10"); 12 inches from top of pipe to bottom of top slab, before "stack" is used.

    b. The minimum diameter for stack heights shall be thirty-six (36) inches.

    c. The minimum distance between pipe openings shall be nine (9) inches.

    d. For four-sided structures having openings in more than one corner, individual shop drawings must be submitted for prior approval.

2. If warranted by field conditions and directed by the Engineer, the Contractor shall, at such locations, construct brick drainage structures (in place of concrete drainage structures),

according to the standards specified below:

Brick construction shall be as follows:

a. Wall thickness minimum eight inches (8") up to eight feet (8') height, unless specified otherwise.

b. Wall thickness minimum twelve inches (12") up to twelve feet (12') height, unless specified otherwise.

c. Brick shall be laid in 1:2 (Portland cement-sand) mortar.

d. Before laying the bricks in mortar, the bricks shall be thoroughly sprinkled with clean water (not to saturation extent).

e. Brick for manhole and inlet structures shall be laid in stretcher courses, with every sixth course a header course.

f. All brick structures shall be plastered smooth inside also with 1/2-inch thick, 1:2 (Portland cement-sand) mortar.

g. No "unsound" brick shall be used. As a test, if a light hammer blow, with the brick held lightly in hand, does not produce a uniform crisp ringing sound, the brick shall be construed to have crack(s), or otherwise unsound and shall be rejected.

h. All bricks shall be solid.

3. No additional compensation shall be paid for brick structures. Brick and concrete shall not be used simultaneously in drainage structure walls. Walls of round structures shall be constructed of concrete only.

4. For all types of manholes, the top and bottom slab shall be as per applicable D.O.T. standards, even if brick is allowed to be used in the manhole walls. The following criteria shall apply to slab thicknesses and steel reinforcements:

a. Top and bottom slabs shall have same thicknesses and reinforcements in any manhole structure.

b. The minimum slab thickness and reinforcement shall be 8 inches thick and #6 bars at 6-inch centers both ways.

c. 4-foot by 6-foot (4' x 6') or larger manholes, including circular manholes with inside diameter of 5-feet (5.0') or larger, shall have 10-inch thick slabs with #7 bars at 6-inch centers both ways.

d. Unless specified on the Plans, four-sided structures with both inside dimensions in excess of eight feet (8.0') and circular structures with inside diameter in excess of eight feet (8.0') shall not be covered by D.O.T. and the above criteria.

5. All grate inlets shall conform to the City of Tampa design standards.

6. Grates on inlets, as well as all other structures, shall be Traffic Bearing Type, unless specified otherwise, and subject to approval of the Engineer. All grate inlets shall be fitted with an approved metal frame at the top to seat the grates.

7. All Type-P manholes shall be bid at one average unit price regardless of size and shape. Similarly, all Type-J manholes will be bid at one average unit price regardless of size and shape unless indicated otherwise in the proposal.

8. The reinforcements and shapes for all drainage structures, unless directed by the Engineer otherwise, shall conform to the Plans and applicable design standards.

9. Vertical support columns (one in case of Type 5 inlet) shall be constructed by the Contractor, as a part of the D.O.T. Type 5 and 6 curb inlets, where and as directed by the Engineer.

10. The Contractor, if so directed by the Engineer in order to better meet site requirements, shall construct B-S-1, B-R-2, B-V-1, or B-R-1 type curb inlets in lieu D.O.T. Type 5 and 6 inlets and vice-versa without additional cost to the City. P-5 and P-6 inlets shall have 3-1/2-foot by 3-1/2-foot substructures unless oversize pipe is to be accommodated or otherwise directed by the Engineer. Legible, detailed plans of each inlet type shall be provided to the Contractor.

    Side openings in curb and grate type inlets may be specified in the Plans or by the Construction Engineer to meet site conditions. The Contractor shall provide such openings without any additional cost.

11. When precast drainage structures are requested as substitutions for poured in place concrete structures, the Contractor shall meet the following additional requirements:

    a. Minimum height of the base structure (manhole or inlet barrel), unless restricted by design, shall be 5 feet 0 inches before extending the structure height by another precast "barrel." The minimum height of the top (extension) precast "barrel" shall be 1 foot 6 inches. "Barrel" extensions of less than 1-foot 6-inch height shall be cast in place with continuous reinforcement.

    b. Four-sided structures may be considered as an alternate to circular structures, but not the reverse.

    c. For substructures for the City-type curb inlets, unless specified otherwise, directed by the Engineer, or to accommodate larger pipes, the Contractor may use a 3-foot by 4-foot (inside dimensions) structure. This structure shall have same slab and wall thicknesses and steel reinforcing as specified for "Type E" grate inlet.

    d. When circular structures are precast in accordance with ASTM C-478, minimum wall thickness shall be six inches (6") thick or as specified in ASTM C-478 for larger diameter structures.

    e. The location of the pipe holes and adequate basic substructures height, unless directed otherwise by the Engineer, shall be the responsibility of the Contractor.

    f. The Contractor shall submit shop drawings only as specified below:

(1) One each-typical for different type of structures.

(2) For structures directed by the Engineer, and/or requiring change with respect to design plans, or as otherwise required by these specifications.

g. Provide schedule of manufacture of the structures. No compensation shall be paid to the Contractor for unusable precast drainage structures.

h. Provide material testing acceptance reports by a licensed private laboratory verifying:

(1) that the structures were constructed in accordance with details shown on the Plans and/or Shop Drawings;

(2) the exact design criteria adhered to; if more than one, identify which criteria applies to which structures;

(3) the project title, project number, file number, date cast, structure, plan sheet number and station;

(4) reinforcement size, spacing and amount;

(5) concrete placement, curing and strength, and verification of concrete cover on reinforcement; and

(6) that the testing laboratory stamp is placed on each structure prior to shipment.

i. Cooperate with Department personnel regarding periodic inspection of the precast units and the precast operations.

12. All manhole and inlet structures shall be set on a minimum 6-inch thick layer of compacted number 57 size coarse aggregate unless noted otherwise in the Plans or Specifications, or unless the Engineer determines a thicker layer is required due to soil and/or water conditions. All such coarse aggregate shall be completely enveloped in non-woven filter fabric as directed by the Engineer.

Payment for the 6-inch thick layer of stone shall be included in the price of the structure. Payment for thicker layers of stone shall be made from the select bedding material (stone) pay item, if available, or as extra work.

13. All casting covers, such as for inlets and manholes, shall bear the appropriate City of Tampa identification for storm sewers and for sanitary sewers, as shown on the Plans and directed by the Engineer.

* * *

SECTION 430 - PIPE CULVERTS AND STORM SEWERS

W-430.01 General

The work specified in this section consists of furnishing drainage pipe and mitered end sections, conforming to these specifications and of the particular types, sizes, and dimensions shown in the plans. This work shall include the installation of the pipe and mitered end sections at the locations called for, in conformity with the lines and grades given, and the furnishing and construction of such joints and connections to existing pipes, catch basins, inlets, manholes, walls, etc., as may be required to complete the work as indicated in the plans.

W-430.02 Laying Pipe

General: Each section of pipe shall be inspected for defects before being lowered into the trench. All pipe shall be carefully laid, true to the lines and grades given, with hubs upgrade and tongue end fully entered into the hub. When pipe with quadrant reinforcement, or circular pipe with elliptical reinforcement, is used, the pipe shall be installed in a position such that the manufacturer's marks designating "top" and "bottom" of the pipe shall not be more than five degrees from the vertical plane through the longitudinal axis of the pipe. Any pipe that is not in true alignment or which shows any settlement after laying shall be taken up and relaid without additional compensation.

Trench Excavation: The excavation of the trench for pipe culverts and storm sewers shall be as specified in Section 1.

Foundation: Where the foundation material is of inadequate supporting value, a suitable foundation shall be provided, as directed by the Engineer, by the removal of unsuitable material and replacing with suitable material as specified in Section 2. Where in the Engineer's opinion, the removal and replacement of unsuitable material is not practicable, he may direct alternates in the design of the pipeline, as required to provide adequate support. Should such alteration in the design result in an increase in the costs of the installation, an appropriate adjustment will not be considered as an adequate basis for extra compensation.

Pipe shall not be laid on blocks or timbers, or on other unyielding material, except where the use of such devices is called for in the plans.

Backfilling: The backfilling around the pipe shall be as specified in Section 2.

Plugging Pipe: When so shown in the plans, the ends of the pipe culverts shall be sealed with a masonry plug a minimum of eight (8) inches in thickness unless otherwise shown in the plans.

End Treatment: The end treatment required at each cross drain, side drain, or storm sewer pipe end is shown in the plans. Alternate types are permitted only when shown. Details for each type of end treatment are contained in the standard index drawings.

As an exception to the above, when concrete mitered end sections are permitted, reinforced concrete U-endwalls may be used but shop drawings must be submitted to the Engineer for approval prior to use.

Metal pipe Protection: To protect corrugated steel or aluminum pipe embedded in a concrete structure, such as an inlet, manhole, junction box, endwall, or concrete jacket, a bituminous coating shall be applied to the surface area of the pipe within and 12 inches beyond the concrete or mortar seal prior to sealing.

The surface preparation, application methods (dry film thickness and conditions during application), and equipment used shall be in accordance with the coating manufacturer's published specifications.

All coating products used must be approved by the Bureau of Materials and Research, Florida Department of Transportation, Gainesville, Florida.

The cost of furnishing and applying the bituminous material shall be included in the contract unit price for new pipe.

W-430.03 Removing and Relaying Existing Pipe

Removal: If the plans indicate that existing pipe is to remain the property of the City, all existing pipe or pipe arch so indicated in the plans to be removed or that does not conform to the lines and grades of the proposed work and that is not to be relaid, shall be taken up and stacked neatly along the right of way, as directed by the Engineer. Due care shall be exercised to prevent damage to salvageable pipe during removal and stacking operations.

Relaying: Where so shown in the plans, existing culvert pipe shall be taken up and cleaned and shall be relaid in the same manner as specified for new culvert pipe. Where necessary, existing metal pipe or pipe arch shall be straightened before it is relaid.

W-430.04 Placing Pipe Under Railroad

General: Pipe culverts to be constructed under railroad tracks shall be constructed in accordance with the requirements of the railroad company.

Unless the specific provisions specifically stipulate that the work of shoring under the tracks, and sheeting and bracing of the trench, is to be done by the railroad company, all such work required by the railroad company or deemed necessary by the Engineer in order to assure safe and uninterrupted movement of the railroad equipment, shall be done by the Contractor ar his expense.

Requirements of the Railroad Company: The method of installation shall be as required by the railroad company as specified in the specific provisions.

When the general method of installation which the railroad company will require is indicated in the plans, such method and any other specific details of the installation which might be indicated in the plans, shall not be changed without written approval of the Engineer, after the approval (or the direction) for such change has been obtained from the railroad.

Notification to Railroad Company; The Contractor shall notify the railroad company of the date on which he expects to begin the work of placing pipe under the railroad tracks at least ten days prior to such date.

Placing Pipe by Jacking: When the placing of the pipe through the railroad embankment is done by the jacking method, the details of the jacking method to be used must be approved by the Engineer and the railroad company before the work is started.

Use of Tunnel Liner: When the railroad company requires that a tunnel liner be used for placing the pipe in lieu of the jacking method, separate payment for the tunnel liner material will be made only in cases where the plans or specifications do not specifically provide that a tunnel liner will be required; in which cases the City will reimburse the Contractor for the actual cost of the liner, delivered at the site. Such cost shall be based on a liner having the minimum gauge acceptable to the railroad.

W-430.05 Specific Requirements for Concrete Pipe

Sealing Joints:

(1) Round Concrete Pipe Other than Side Drain: For all round concrete pipe other than side drain pipe, the pipe joints shall be sealed by the use of round rubber gaskets. When rubber gaskets are used, the pipe joints shall meet the requirements specified in Section W-942-1. The gasket and the surface of the pipe joint, including the gasket recess, shall be clean and free from grit, dirt, and other foreign matter at the time the joints are made. In order to facilitate closure of the joint, application of an approved vegetable soap lubricant immediately prior to closing of the joint will be permitted.

(2) Side Drain Pipe: For all concrete pipe which does not have rubber-gasket joints, the joints shall be thoroughly wetted before the inside mortar is placed; and before succeeding sections of the pipe are laid, the lower half of the joint portion of the pipe in place shall be filled on the inside with cement mortar and the upper half of the tongue portion of the next joint wiped with cement mortar, both in sufficient thickness to bring the inner surface of the abutting pipe flush and even, when the pipe is laid. After the pipe is laid, the inside of the joint shall be wiped and finished smooth and a mortar bead not less than 3/4 inch thick shall be formed completely around the outside of the joint.

Laying Requirements for Concrete Pipe with Rubber Gasket Joints: For concrete pipe laid with rubber gasket joints, any deviation from true alignment or grade which would result in a displacement from the normal position of the gasket of as much as 1/4 inch, or which would produce a gap exceeding 1/2 inch between sections of pipe for more than 1/3 of the circumference of the inside of the pipe, will not be acceptable and where such occurs the pipe shall be relaid without additional compensation. Where minor imperfections in the manufacture of the pipe cause a gap greater than 1/2 inch between pipe sections, the joint will be acceptable provided the gap does not extend more than 1/3 the circumference of the inside of the pipe. No mortar, joint compound, or other filler which would tend to restrict the flexibility of the gasket joint shall be applied to the gap.

Field Joints for Elliptical Concrete Pipe: Field joints for elliptical concrete pipe will be detailed in the plans or may be made with a preformed plastic gasket material. Pipe to be laid with joints made from preformed plastic material shall be subject to the following requirements:

(1) General: Installation shall be in accordance with the manufacturer's instructions and

these specifications. The Contractor shall be responsible for obtaining a permanent watertight joint.

(2) Material: The preformed gasket material shall conform to the requirements of Section W-942-2.

(3) Joint Design: The pipe manufacturer shall furnish the Engineer with details in regard to configuration of the joint and the amount of gasket material required to effect a satisfactory seal. Joint surfaces which are to be in contact with the gasket material shall not be brushed or wiped with a cement slurry. Minor voids may be filled with cement slurry provided that all excess cement slurry is removed from the joint surface at the point of manufacture.

(4) Primer: Prior to application of the gasket material, a primer of the type recommended by the manufacturer of the gasket material shall be applied to all joint surfaces which are to be in contact with the gasket material. The surface to be primed shall be thoroughly cleaned and dry when the primer is applied.

(5) Application of Gasket: Prior to placing a section of pipe in the trench, gasket material shall be applied to form a continuous gasket around the entire circumference of the leading edge of the tongue and the groove joint in accordance with the detail entitled "Detail for Application of Gasket Material (Before Joint Pull-Up)." The paper wrapper on the exterior surface of the gasket material shall be left in place until immediately prior to joining of sections. The gasket material shall be checked to assure that it is bonded to the joint surface, immediately prior to placing a joint in the trench. Plastic gasket material shall be applied only to surfaces which are dry. A hand heating device shall be kept at the job site to dry joint surfaces immediately before application of the plastic gasket material. When the atmospheric temperature is below 60 degrees F., plastic joint seal gaskets shall either be stored in an area warm to above 70 degrees F., or artificially warmed to this temperature in a manner satisfactory to the Engineer.

(6) Installation of Pipe: Handling of a section of pipe after the gasket material has been affixed shall be carefully controlled to avoid displacement of gaskets or contamination of gasket material with dirt or other foreign material. Any gasket displaced or contaminated in handling of the pipe shall be removed and repositioned or replaced as directed. The pipe shall be installed in a dry trench. The bottom of the trench shall be carefully shaped so as to minimize the need for realignment of sections of pipe after they are placed in the trench. Care shall be taken to properly align each section of pipe prior to the gaskets coming into contact. Realignment of a joint after the gaskets come into contact tends to reduce the effectiveness of the seal and shall be held to a minimum. When the pipes are joined, the entire joint shall be filled with gasket material and there shall be evidence of squeeze-out of gasket material for the entire internal and external circumference of the joint. Excess material on the interior of the pipe shall be trimmed to provide a smooth interior surface. After the pipe is in its final position, the joint shall be carefully examined to determine that the gasket material is satisfactorily adhering to all surfaces of the joint and that the entire joint is filled with gasket material. If a joint is defective, the leading section of pipe shall be removed and the joint resealed.

Requirements for Concrete Radius Pipe:

Design: Concrete radius pipe shall be constructed in segments not longer than four feet (along the pipe centerline), except where another length is called for in the plans or the specific provisions. Each segment shall be joined by round rubber gaskets. The pipe manufacturer shall submit details of his proposed joint and the segment length and shape for approval by the Engineer prior to manufacture.

Pre-Assembly: Prior to acceptance of the pipe, the manufacturer shall pre-assemble the entire radius section in his yard to assure a proper fit for all parts. This assembly may be made without gaskets at the option of the manufacturer. Upon satisfactory assembly, the joints shall be consecutively numbered on both the interior and exterior surfaces of each joint, and match marks showing proper position of joints shall be made. Installation on the project shall be in the order of pre-assembly.

W-430.06 Field Joints for Aluminum Pipe

General: Field joints for aluminum pipe shall be made with bands fabricated of the same alloy as the culvert sheeting and shall meet the requirements of AASHTO M 196.

Aluminum Cross Drains, Storm Sewers, and Gutter Drains: The provisions specified above for corrugated steel pipe for these installations shall apply also to aluminum pipe (for circular and helical corrugations) except that the material used in the bands and band connections for the alternate combination of joint materials shall be fabricated of the same alloy as the culvert sheeting.

W-430.07 Joints in Cast Iron Pipe

The provisions of Section 430.07 for mortaring and wetting inside the joints, as specified for concrete side drain pipe without rubber gaskets, shall apply to the inside joints of all cast iron pipe.

* * *

SECTION 960 - STRUCTURAL REPAIR SPECIFICATIONS AND DETAILS

A. CRACK INJECTION REPAIR
B. SEALING CRACKS AND CONCRETE STRUCTURE SURFACES
C. MINOR SPALL REPAIR
D. MAJOR SPALL REPAIR
E. CULVERT ROOT INTRUSION REPAIR
F. TOP SLAB INLET ACCESS REPAIR
G. ARTESIAN WELL REPAIR
H. RESTORE SPALLED AREAS WITH GUNITE
I. VOID FILLING REPAIR
J. JOINT SEALING REPAIR

A. CRACK INJECTION REPAIR

Description:
Inject epoxy into cracks in the culvert ceiling, walls, or floor where water infiltrates through cracks, or as directed by the Engineer. The method generally consists of drilling holes at close intervals along the cracks, installing entry ports, and injecting the epoxy under pressure. Reference Figure 1.1 for additional notes and details.

1. Materials – Meet the requirements of FDOT Section 926 and as follows:
   a. Use Type E compound epoxy for injection.
   b. Use Type F-1 compound epoxy for sealing crack surfaces in preparation for injection.
   c. Use epoxy materials on the FDOT Approved Products List (APL).
   d. Submit 10 copies of the proposed repair's product data and Material Safety Data Sheets (MSDS) for review and approval prior to initiating the repair work. For each product submitted, list the location (e.g. horizontal, vertical or overhead application) where the product will be used. Product data sheets shall list how the product is packaged, how the product is mixed, application temperature, product shelf life, storage conditions, curing times, product strength, etc. For each submission, allow 10 days for the City to review and approve.

2. Equipment – For the equipment used to inject the epoxy, meet the recommendations of the epoxy injection material manufacturer and the following requirements:
   a. Use equipment that has the capacity to automatically proportion the material components within the mix ratio tolerances set by the epoxy materials manufacturer.
   b. Use equipment that has the capacity to automatically mix the epoxy component materials within the pump and injection apparatus. The Engineer will not allow batch mixing.
   c. Use equipment that has the capacity to inject the epoxy resin under controlled variable pressures up to 200 psi, with a pressure gauge mounted at or near the nozzle to indicate the actual working pressure.

3. Injection Personnel Qualifications – Employ personnel trained in performing injection work similar to that required for the project to carry out the epoxy injection of cracks in concrete. Provide an on-site supervisor for the epoxy injection work who is qualified by one of the following methods:
   a. Certified by the manufacturer of the epoxy injection material as having the necessary competence to accomplish the epoxy injection work in a satisfactory and safe manner in compliance with these Specifications.
   b. Furnish documented evidence that the supervisor has a minimum of three years of experience of on-site supervision of similar epoxy injection work and a list of five contracts in which similar epoxy injection was acceptably completed. Ensure that the listed experience in on-site supervision and completed contracts contains the project name and location, names of contracting parties, the owner's name, brief description of the work, and dates of completion of the epoxy injection work. Furnish written evidence showing personnel training and the on-site supervisor's qualification to the City prior to beginning any epoxy injection work.

4. Crack Surface Preparation and Cleaning Requirements:
   a. Clean the area surrounding the cracks of all deteriorated concrete, efflorescence and other contaminants detrimental to the adhesion of the surface sealing epoxy compound. Clean the interiors of the cracks with air under sufficient pressure to remove loose materials entrapped within the crack including efflorescence, oil, grease, dirt, or fine particles of concrete that may prevent epoxy penetration and bonding.

5. Sealing Cracks for Epoxy Injection:
   a. After cleaning, drill injection port holes using a swivel drill chuck and hollow drill bits, including a vacuum attachment which will remove dust and debris generated during drilling. Determine the spacing of the injection port holes by the size of the crack and the depth of the crack in the concrete substrate. Generally, space the injection ports from 4 to 8 inches apart. Determine the actual spacing of injection ports by field trials. Drill the holes to a minimum depth of 5/8 inch, exercising care in aligning the hole along the plane of the crack so that the hole follows the crack for the full 5/8 inch depth.
   b. Insert the injection ports in the drilled holes approximately 1/2 inch, allowing for a small reservoir below the injection port.
   c. After cleaning the cracks and drilling the injection port holes, seal the crack surface and the injection ports with suitable epoxy.

6. Epoxy Injection:
   a. Inject the epoxy in accordance with the epoxy manufacturer's instructions. Determine the actual injection procedures and pressures in field trials, based on crack widths and depth into the substrate and sufficiency of the results.
   b. Begin at one end of the crack and inject epoxy at a pressure determined by the field trials. If the epoxy begins to flow from an adjacent port, seal that port and continue with the epoxy injection. Continue with the epoxy injection until the epoxy will not flow into the crack. Seal the working port and move to the next open port to continue the epoxy injection.

7. Cleaning After Epoxy Injection: Clean concrete surface areas of excess epoxy materials and injection ports after completing the epoxy injection work. Clean in a manner which will not damage the concrete by scraping, light sand blasting, grinding, use of solvents, or any other appropriate method approved by the epoxy manufacturer. Clean excess materials so that no epoxy material or injection ports extend beyond the plane surface of the concrete.

8. Acceptance: Inform the City when each repair is completed. Drill three cores located in each day's work as directed by the Engineer. Take drilled core samples containing representative crack sizes. The Engineer will accept the epoxy injection work represented by the core samples when the core samples indicate that 90% of the crack void greater than 0.006 inch wide is filled with epoxy resin and the concrete of the core sample is bonded through the crack into a unit.

   Reinject epoxy injection work which does not satisfy the acceptance criteria, and correct it as necessary at no expense to the City. Install additional injection ports as required to achieve satisfactory reinjection of epoxy resin.

   After the epoxy injection work is completed and accepted, fill the core holes with an epoxy mortar consisting of one part by volume epoxy injection resin and four parts by volume clean, dry sand. Supply the sand in moisture proof bags. Do not use previously opened bags of sand for making epoxy mortar. The Contractor may use one part by volume epoxy material for sealing with one part by volume clean, dry sand in lieu of the above.

   The Contractor shall perform the required tests and shall fill the test core holes at no additional expense to the City. Additionally, crack injection repairs will be accepted as adequate if the repaired crack does not permit water to seep through the repair for 120 days after the crack is repaired. The Contractor will correct all deficient crack repairs as necessary at no expense to the City.

<u>Payment will be made under:</u>
Item No. 960-A Crack Injection Repair – LF

B. SEALING CRACKS AND CONCRETE SURFACES

Description:
Sealing of concrete surfaces and cracks in concrete using materials, surface preparation, and application of penetrant sealers and high molecular weight methacrylates as specified in this Section is provided as an alternative to repairing cracks in the culvert ceiling, walls, or floor using the injection of epoxy material described in 960-A above. Consult with the Engineer in the event of conflict between the manufacturer's recommendations and this specification. Perform surface preparation and application to all areas as shown in the Plans or as directed by the Engineer.

Materials:
Use alkylalkoxysilane penetrant sealers, with 40% solids and active materials dispersed in water that meet the following:

Table 1: Physical Properties of Penetrant Sealers	
Appearance	White, Milky Liquid
VOC content (EPA method 24)	Less than 350 g/l
Flash Point (ASTM 3278)	Greater than 200°F SETA
Resistance to Chloride ion penetration AASHTO T259 and T260	Less than 0.52 pounds/yd^3 (criteria of 1.5) at 1/2 inch level; 0.00 pounds/yd^3 (criteria of 0.75) at 1 inch level
Water absorption test (ASTM C 642)	0.50% maximum/48 days 1.5% maximum/50 days
NCHRP 244	
Series II – cube test	
Water weight gain	85% reduction minimum
Absorbed chloride	87% reduction minimum
Series IV – Southern Climate	
Absorbed chloride	95% reduction minimum
Scaling resistance test (ASTM C 672)	(non – air – entrained concrete) 0 rating "No Scaling" (100 cycles)

Surface Preparation for Penetrant Sealer:
General: Prepare concrete surfaces to receive a penetrant sealer in accordance with these Specifications dependent on whether the surfaces are of recently cast concrete (new construction) or of existing concrete.

Surface Preparation for New Construction: Remove substances such as dust, grime, dirt, curing compounds, form oil, debris, etc. by water blasting, light sandblasting, wire brushing, or other methods acceptable to the Engineer, all in accordance with the penetrant sealer manufacturer's recommendations. When using cleaning methods other than water blasting, wash the cleaned surfaces with water meeting the requirements of Section 923, as a final cleaning operation.

Surface Preparation for Existing Concrete: Remove substances such as dust, grime, dirt, stains, mineral deposits, oil, bituminous materials, debris, and all other deleterious material by using water blasting equipment of sufficient operating capacity and pressure, all in accordance with the penetrant sealer manufacturer's recommendations.

Cleaning Equipment: Use approved water blasting equipment to clean existing concrete surfaces. Use water blasting equipment which is specifically manufactured to clean concrete surfaces. Use equipment that has a minimum rated nozzle capacity of 6,000 psi using the spray head proposed for use in the work.

Water for Blasting: Use water meeting the requirements of Section 923.

Concrete Surface Cleaning Operation: During the cleaning operation, exercise sufficient care to minimize the removal of the concrete matrix. Furnish hand tools, power grinders, and other similar equipment to remove materials which cannot be removed by water blasting without abrading the concrete matrix beyond acceptable limits. Wash concrete surfaces cleaned by methods other than water blasting with water blasting equipment as the final cleaning operation.

Limit the duration of water blasting to provide a light abraded surface. Do not allow surface abrasion to exceed 0.016 inch. The Engineer will not require further cleaning of stains still apparent after abrading to a depth of 0.016 inch. Avoid exposure of coarse aggregate by water blasting.

Re-clean concrete surfaces which become contaminated before applying the penetrant sealer at no expense to the City prior to applying the penetrant sealer.

Application of Penetrant Sealer Materials: Apply the penetrant sealer only to surfaces which have been prepared in accordance with these Specifications and approved by the Engineer. For application of the penetrant sealer, meet these Specifications and the penetrant sealer manufacturer's recommendations.

Prior to application of any penetrant sealer, cure concrete for a minimum of 21 days.

Apply penetrant sealer no later than ten days after completion of the surface preparation and prior to any contamination of the prepared surfaces as determined by the Engineer.

Application Equipment: Apply the penetrant sealer using any suitable air or airless sprayer with an operating pressure of approximately 20 psi.

Application Limitations: Apply the penetrant sealer material only when the ambient air temperature is between 50 and 90ºF. Apply the penetrant sealer only to concrete surfaces as prescribed by the manufacturer's recommendations. Do not apply the penetrant sealer when winds are blowing 25 mph or more, during rainfall, or when water spray or mist is present.

Application: Apply the penetrant sealer only to concrete surfaces that have been prepared in accordance with the requirements and limitations set forth in these Specifications. Determine the actual coverage rate in square feet per gallon on the basis of field trials. Conduct a field trial to determine coverage rate at the beginning of any penetrant sealer application operation. Conduct additional confirmation field trials at a frequency of once for every 5,000 ft^2 applied, each production day of application, or when the character of the work changes, whichever is sooner. For each field trial, determine the optimum coverage rate for 500 ft^2 of surface area. Maintain the penetrant sealer application rate between 155 and 225 ft^2 covered per gallon of penetrant sealer used. Apply the penetrant sealer in a uniform manner without puddling and skips. Redistribute any penetrant sealer which is applied and subsequently puddles in low areas over the concrete surfaces by use of a squeegee.

Generally, begin the application of the penetrant at the lowest elevation and proceed upward toward higher elevations.
Maintain operating pressures in the sprayers used for application of the penetrant sealer material sufficiently low so that atomization or misting of the material does not occur.

<u>Control of Materials:</u>
Packaging and Identification: Deliver the penetrant sealer to the project in unopened, sealed containers with the manufacturer's label identifying the product and with numbered seals intact. Ensure that each container is clearly marked by the manufacturer with the following information:

a. Manufacturer's name and address.
b. Product name.
c. Date of manufacture.
d. Expiration date.
e. LOT identification number.

f. Container serial number.

Manufacturer's Certification: Provide the Engineer a certification conforming to the requirements of FDOT Specifications Section 6 from the manufacturer, confirming that the penetrant sealer meets the requirements of this Section. Do not incorporate these materials into the project until the Engineer has accepted and approved the certification for the material.
Submit such certification for each LOT of material delivered to the project. In each certification, identify the serial or LOT numbers of the containers certified.

Materials Sampling for Tests: The Engineer may require samples from each LOT or container of materials delivered to the project or from containers at the point of use. When samples are required, furnish samples in accordance with the Engineer's instructions.

Storage of Materials: Store materials delivered to the job site in original unopened containers within an appropriate storage facility. Use a storage facility that provides protection from the elements, and safe and secure storage of the materials.

Unused Material in Opened Containers: Do not return unused material in opened containers to storage for later use. Either apply such material to appropriate areas on concrete surfaces or remove and dispose of it at offsite locations provided by the Contractor.

Acceptance: The Engineer will accept penetrant sealer application when it is determined that the Contractor has properly cleaned all surface areas to be sealed and has applied the penetrant sealer within the required rates of application.

High Molecular Weight Methacrylate (HMWM):
General: Perform the surface preparation and application of a high molecular weight methacrylate to seal cracks on horizontal and slightly sloped concrete surfaces as approved by the Engineer.

The rate of application (gl/ft^2 of concrete) and the application method and equipment must be approved by the Engineer prior to commencement of work based on the size, depth and the internal condition of cracks. Submit a written sealer application plan based on the above described crack characteristics for approval by the Engineer. In addition, provide a minimum of 14 days advanced notice so that personnel from the City may be present at the beginning of work to evaluate the cracks and provide final approval of the application rate. Make arrangements with the material manufacturer to provide on-site technical assistance for the initial application and certify that the mixing ratio, application methods, and sand broadcasting are correct and in accordance with their recommendations.

Maintain a daily log of used resin material to be verified by the Engineer. Include the drum or container identification number in the log as well as the date and location of use.

Retain the containers at the jobsite until the Engineer verifies its use and authorizes removal from the site.

Materials: The methacrylate system must be a three component system consisting of: a) methacrylate monomer, b) cumene hydroperoxide (CHP) initiator, and c) cobalt promoter. Use a HMWM monomer that is included on the FDOT's Qualified Products List (QPL). Use initiator and promoter approved by the monomer manufacturer.

Properties: Use a methacrylate material that meets the following physical and performance requirements:

Table 2: Physical Properties of Methacrylate Resin	
Viscosity (Brookfield RVT)	14-20 cps at 50 rpm
Density (ASTM D1481)	8.5 - 9.0 lb/gl at 77°F
Flash Point (ASTM D93)	> 200°F (Pensky Martens CC)

Odor	Low
Bulk Cure Speed	3 Hours @ 73°F (max.)
Surface Cure	8 Hours @ 73°F (max.)
Gel Time (ASTM 2471)	60 minutes (max.)
Tack Free Time	5 Hours (max.) (at 72° F and 50% Relative Humidity)
Compressive Strength (AASHTO T106)	6,500 psi (min)
Tensile Strength (ASTM C307)	1,300 psi (min)
Shear Bond Adhesion (ASTM C882)	600 psi (min)
Wax Content	0

The monomer shall have a shelf life of no less than 12 months and shall be no more than 8 months old at the time of application. Provide each container shipped to the job site with the following information on a manufacturer's label: manufacturer's name, product name, lot or batch number, date of production, and drum serial number. Identify the catalysts by their generic classification and provide the date of manufacture.

Sand: Use uniformly graded 6-20 (or similar), clean, bagged, blast sand for spreading over the applied polymer on bridge decks and other riding surfaces. Certify that the sand has a maximum moisture content that does not exceed 0.25% and that the maximum amount of dust or other material that may pass through a No. 200 sieve -200 content) is not greater than 0.75%.

Store the sand at a location that will preserve the above described conditions and characteristics of the sand until applied.

Surface Preparation:
Cleaning: On the day of application, thoroughly power sweep the area to be treated to remove all dust, dirt or debris present. On bridge decks and other riding surfaces, use a tractor mounted (or similar) power broom with non-metallic bristles suitable for the intended purpose.

Use a power vacuum after sweeping when sealing cracks on grooved bridge decks. Re-clean the deck as necessary just prior to the application as debris may be blown back onto the work area by adjacent traffic or other means.

If present, remove oils and oil based substances from the concrete surface using an approved solvent.

Containment: Provide adequate containment to prevent the sealer material from flowing beyond the designated area of application. Plug any drain holes or openings within the work area. Prevent airborne material from dispersing onto open traffic lanes or outside the work area.

Application:
Equipment: Apply the material according to the manufacturer's specifications using mobile equipment capable of distributing material on large areas of decks and riding surfaces. Apply the material by hand using adequate containers for isolated or localized applications.

Mixing: Mix the methylmethacrylate material following the manufacturer's specified mixing proportions for the catalysts. Perform the initial mixing by equally dividing the resin to be used into two separate containers. In all instances, mix the initiator (CHP) at the HMWM manufacturer's specified volume with 50% of the monomer resin in one container and the cumene promoter at the HMWM manufacturer's specified volume with the other 50% in the second container. After properly blending, combine the two resins and mix as per manufacturer's instructions. For spray bar application, mix the activator/resin blend and the promoter/resin blend through a static mixer in the feed line located ahead of the material distribution bars where polymerization would start. Calibrate the valves to the static mixer to ensure a one to one mixing ratio of the two blends.

Polymer Application (Mobile Distribution): Apply the material only under weather conditions recommended by the manufacturer and when no rainfall has occurred during the previous 48 hours and no rain is expected for the next 6 hours following completion of the application. Unless otherwise approved by the Engineer, distribute the monomer uniformly over the work area using a pressure nozzle or spray head distribution bar system. Provide feed to the distribution bar(s) using positive displacement pumps moving equal amounts of the two monomer blends from two calibrated drums.

Calibrate the equipment to mix the two monomer blends to the recommended ratio (by volume) within plus or minus 5%. The discharge volume shall be calibrated to the moving speed to provide a discharge rate capability ranging from 50 to 200 square feet per gallon at a pressure ranging from 15 to 60 psi.

The typical application rate of the material is approximately 100 square feet per gallon. Prior to application of the monomer, the State Materials Office will determine the final production application rate based on the internal characteristics of the cracks as determined from Contractor supplied cores that the Engineer approves as being representative of the overall cracking conditions.

Polymer Application (Localized Distribution): Distribute the material by hand over the work area using pails or other suitable containers adequate for the size of the area. This only applies to localized small areas or areas where the use of mobile distribution equipment would be considered impractical as approved by the Engineer.

Apply the material only under conditions recommended by the manufacturer and on areas that comply with manufacturer's requirements and specifications.

Sealing of Cracks: Regardless of the method used to apply the material over the concrete surface, work the material back and forth over the cracks to maximize the amount of material to be absorbed by the cracks. Move the material over the cracks using brooms, squeegees or paint brushes as appropriate, based on the size of the area. Commence this operation immediately after distributing the material on the concrete surface. Continue this operation until no additional material is flowing inside the cracks or the material begins to exhibit signs of polymerization.

Do not distribute material over areas larger than what the available personnel can effectively work over the cracks within the limits of the pot life.

Sand Distribution: Apply sand over the monomer treated area within a timely period following the application of the polymer based on the manufacturer's recommendations for the existing conditions. Use equipment that will produce a uniform distribution of the sand over the treated area. If wheel mounted, use a sand spreader that has pneumatic tires compatible with the treatment material such that no tire footprints are left on the deck surface.

Use an initial application rate of 0.6 (plus or minus 0.05) pounds of sand per square yard of treated area, and adjust the rate as necessary to produce a skid number (SN) of no less than 25 at 24 hours and 30 at 7 days. Coordinate with the Engineer to conduct a preliminary on-site skid test to determine the actual sand application rate prior to the beginning of production application. If friction numbers below those specified are obtained, completely remove all loose sand from the surface and re-apply the polymer at a rate of 150 square feet per gallon and spread additional sand as necessary to achieve the specified skid numbers. Remove the surface material by grinding or other approved method if satisfactory friction values are not achieved. Friction tests will be conducted by the State Materials Office.

Opening Riding Surfaces to Traffic: Protect the sand covered area from vehicular traffic until the polymer has fully cured. After curing, power vacuum to remove excess sand from the riding surface, before opening to traffic.

Cure Test: Test curing on the treated area using a cotton strand or cotton ball. Consider the material fully cured and ready for traffic when polymer does not adhere to the cotton ball when pressed against the treated surface and then pulled away. Obtain approval from the Engineer prior to reopening area to traffic.

Method of Measurement:
Prestressed, precast items designated in the Plans to be sealed with penetrant sealer, will not be measured for separate payment. The Contractor shall include the cost of cleaning, sealing, and applying penetrant sealer with the cost of the prestressed, precast items. For cast-in-place surfaces to be sealed with penetrant sealer, the quantities to be paid for will be (1) the volume, in gallons, of penetrant sealer as determined by use of the field measured area satisfactorily sealed divided by the approved application rate based on field trials, and (2) the area, in square feet, of cleaning and sealing concrete surfaces as determined by field measurement, completed and accepted.

Quantities of high molecular weight methacrylate to be paid will be based on the volume in gallons of monomer resin material (not including the promoter and initiator) actually used to seal the cracked surfaces at the approved application rate, and the dimensions of the treated areas in square feet.

The area of application will be computed based on the plan dimensions of concrete surface sealed with methacrylate. For localized application, the Engineer will determine the method of measurement that most accurately reflects the area of application in square feet.

Basis of Payment:
Prices and payments will be full compensation for all work specified in this Section, including cleaning, furnishing and applying the material required to satisfactorily clean and seal cracks and designated surface areas, testing, and miscellaneous related costs including storage, handling, etc.

No additional compensation will be made for material, reapplication or removal due to Contractor error, or to correct deficient friction (skid) values.

Payment will be made under:
Item No. 960-B Sealing Cracks and Concrete Structure Surfaces – SF

C. MINOR SPALL REPAIR

Repair areas of spall, delaminations, and unsound concrete where surface spalling in the culvert ceilings, walls and floor is present under any of the following conditions:

1. exposed and corroded reinforcing steel,
2. bond between the exposed rebar and surrounding concrete is sound,
3. reinforcing steel exhibits limited section loss,
4. does not meet the criteria for a Major Spall Repair, as defined below,
5. or as directed by the Engineer.

If two or more adjacent lengths of rebar are visible, or the visible thickness of reinforcing steel exceeds 50% of its diameter/thickness, or where the bond between the exposed rebar and surrounding concrete is destroyed, or where the existing reinforcing steel has greater than 25% loss in cross-sectional area due to corrosive deterioration or damage, then a perform a Major Spall Repair. Refer to Figure 2.1 for additional notes and details.

Concrete Removal and Surface Preparation Notes:

1. Sound all concrete surfaces near the exposed rebar to determine the limits of unsound concrete to be removed and repaired. Limits shall be marked on the surfaces for review and approval by the Engineer before concrete removal may proceed. The depth of removal shall be limited to 1/2 of the exposed rebar diameter/thickness or as approved by the Engineer.
2. Remove all unsound concrete and prepare surfaces for repair in accordance with ICRI Technical Guidelines 310.1R-2008 "Guide for Surface Preparation of Deteriorated Concrete Resulting from Reinforcing Steel Corrosion." Prepared concrete surfaces shall be structurally sound and free of bond inhibiting substances.
3. Sawcut along the perimeter of the exposed rebar and chip to remove unsound concrete. Sawcut edges shall 3/4" deep, feathered edges will not be acceptable. Chip until the repair corners are clean.
4. Remove unsound concrete using mechanical abrasion. Do not use excessive force which may result in micro fracturing of the sound concrete.
5. Remove rust from exposed reinforcing steel by abrading to "white metal condition." Care shall be taken to avoid damaging the existing reinforcing.
6. Prepared surfaces shall be intentionally roughened to a 1/4" minimum amplitude to provide a mechanical lock for the repair.

Repair Procedure:

1. Submit 10 copies of the proposed repair's product data and Material Safety Data Sheets (MSDS) for review and approval prior to initiating the repair. For each product submitted, list the location (e.g. horizontal, vertical or overhead application) the product will be used. Product data sheets shall list how the product is packaged, how the product is mixed, application temperature, product shelf life, storage conditions, curing times, product strength, etc. For each submission, allow 10 days for the City to review.
2. Apply a Type A epoxy compound in accordance with Section 926 of the FDOT Specifications to the existing concrete surfaces prior to placing the fresh repair mortar.
3. Restore concrete surfaces using approved materials in accordance with Section 926 or Section 930 of the FDOT Specifications. Select materials suitable for application, including orientation (e.g. horizontal, vertical or overhead application) and thickness. Mix, place and cure repair materials in accordance with manufacturer's recommendations. Finish repair materials flush with the original concrete surface unless noted otherwise. The surface finish shall meet the requirements for a general surface finish per Section 400 of the FDOT Specifications.
4. Inform the City when each repair is completed. The Contractor will perform concrete core testing per ASMT C1583 to determine the bond strength between the existing culvert concrete and the repair. The City will accept the repair, if the tension pull test equals or exceeds 200 psi, or failure occurs in the existing culvert concrete. The Contractor will fill the test core holes at no additional expense to the City.

Payment will be made under:
Item No. 960-C Rebar Repair – SY

D. MAJOR SPALL REPAIR

Repair spalls in the culvert ceilings, walls and floor where two or more adjacent lengths of reinforcing steel are exposed and corroded and spalling is present due to exposed and corroded reinforcing steel, or where the visible thickness of reinforcing steel exceeds 50% of its diameter/thickness, or where the bond between the exposed rebar and surrounding concrete is destroyed, or where the existing reinforcing steel has greater than 25% loss in cross-sectional area due to corrosive deterioration or damage, or as directed by the Engineer. See Figures 3.1, 3.2, and 3.3 for additional notes and details.

Concrete Removal and Surface Preparation Notes:

1. Sound all concrete surfaces at the proposed repair to determine the limits of unsound concrete to be removed and repaired. Limits shall be marked on the surfaces for review and approval by the engineer before concrete removal may proceed. The depth of removal shall be per the notes and details on Figures 3.1, 3.2, and 3.3, or as approved by the engineer.
2. Remove all unsound concrete and prepare surfaces for repair in accordance with ICRI technical guidelines 310.1R-2008 "Guide for Surface Preparation of Deteriorated Concrete Resulting from Reinforcing Steel Corrosion." Prepared concrete surfaces shall be structurally sound and free of bond inhibiting substances.
3. All repair areas shall have square edges around the perimeter of the spall defined by 3/4" deep saw cut lines. Chip the repair edges clean to form 45 to 90 degree corners along the edges and corners of the repair area. The depth of the chipped edge shall be 3/4" or greater. Feathered edges will not be acceptable.
4. Remove unsound concrete using mechanical abrasion, but do not use excessive force, which may cause micro fracturing of the sound concrete. Remove concrete around the bars to 3/4" minimum or “1.5X” the maximum aggregate size, whichever is greater. Phased repairs may be necessary.
5. Where depth of concrete removal exceeds 2", install galvanized welded wire fabric conforming to ASTM A185. Field bend welded wire fabric to conform with any changes in the concrete surface profile. Tie welded wire fabric to existing reinforcement with galvanized wire. Ties shall be spaced at 6" maximum.
6. Remove rust from exposed reinforcing steel by abrading to "white metal condition" and prepare surfaces in accordance with ICRI Technical Guide 310.1R-2008 "Guide for Surface Preparation of Deteriorated Concrete Resulting from Reinforcing Steel Corrosion." Where existing reinforcing steel has greater than 25% loss in cross-sectional area due to corrosive deterioration or damage, supplement reinforcing with additional reinforcing as shown in Figure 3.3. Care shall be taken to avoid damaging the existing reinforcing.
7. Prepared surfaces shall be intentionally roughened to a minimum profile of 1/4" to provide mechanical lock for the repair.
8. Where the bond between existing concrete and reinforcement has been destroyed or where more than half the diameter of the bar is exposed, remove the concrete adjacent to the bar to a depth that will permit the concrete repair mortar to bond to the periphery of the bar. Provide a minimum 3/4” clearance around the reinforcement or “1.5X” the maximum aggregate size, whichever is greater.

Repair Procedure:

1. Submit 10 copies of the proposed repair’s product data and Material Safety Data Sheets (MSDS) for review and approval prior to initiating the repair. For each product submitted, list the location (e.g. horizontal, vertical or overhead application) the product will be used. Product data sheets shall list how the product is packaged, how the product is mixed, application temperature, product shelf life, storage conditions, curing times, product strength, etc. For each submission, allow 10 days for the City to review.
2. Apply a Type A epoxy compound in accordance with Section 926 of the FDOT Specifications to the existing concrete surfaces prior to placing the fresh repair mortar.
3. Restore concrete surfaces using approved materials in accordance with Section 926 or Section 930 of the FDOT Specifications. Select materials suitable for application, including orientation (e.g. horizontal, vertical or overhead application) and thickness. Mix, place and cure repair materials in accordance with manufacturer's recommendations. Finish repair materials flush with the original concrete surface unless noted otherwise. The surface finish shall meet the requirements for a general surface finish per Section 400 of the FDOT Specifications.
4. Inform the City when each repair is completed. The Contractor will perform concrete core testing per ASMT C1583 to determine the bond strength between the existing culvert concrete and the repair. The City will accept the repair, if the tension pull test equals or exceeds 200 psi, or failure occurs in the existing culvert concrete. The Contractor will fill the test core holes at no additional expense to the City.

Payment will be made under:
Item No. 960-D Major Spall Repair - SY

E. CULVERT ROOT INTRUSION REPAIR

Description:
Repair culvert ceilings, walls and floor where damage has occurred by root intrusion. Reference Figure 4.1 for additional notes and details.

Repair Procedure:

1. Prior to initiating the repair, submit 10 shop drawings to include:
   a. The location and a unique identifier of each root intrusion to be repaired.
   b. The proposed root intrusion approximate location (station), size and distance to the culvert bottom slab.
   c. Material Safety Data Sheets (MSDS)
   The City will have 10 days to review and approve each submission.
2. The repair area is defined as the area of the root intrusion plus a minimum of 4" in all directions. The Contractor shall mark the limits of the repair area on the structure for approval by the Engineer.
3. All repair areas shall have square edges around the perimeter of the spall defined by 3/4" deep saw cut lines. Chip the repair edges clean to form 45 to 90 degree corners along the edges and corners of the repair area. The depth of the chipped edge shall be 3/4" or greater. Feathered edges will not be acceptable.
4. Remove unsound concrete using mechanical abrasion, but do not use excessive force, which may cause micro fracturing of the sound concrete. Remove concrete around the bars to 3/4" minimum or "1.5x" the maximum aggregate size, whichever is greater.
5. Where depth of concrete removal exceeds 2", install galvanized welded wire fabric conforming to ASTM A185. Field bend welded wire fabric to conform with any changes in the concrete surface profile. Tie welded wire fabric to existing reinforcement with galvanized wire. Ties shall be spaced at 6" maximum.
6. Remove rust from exposed reinforcing steel by abrading to "white metal condition" and prepare surfaces in accordance with ICRI Technical Guide 310.1R-2008 "Guide for Surface Preparation of Deteriorated Concrete Resulting from Reinforcing Steel Corrosion." Where existing reinforcing steel has greater than 25% loss in cross-sectional area due to corrosive deterioration or damage, supplement reinforcing with additional reinforcing as shown in Figure 3.3. Care shall be taken to avoid damaging the existing reinforcing.
7. Prepared concrete surfaces shall be intentionally roughened to a minimum profile of 1/4" to provide mechanical lock for the repair. Prepared concrete surfaces shall be structurally sound and free of bond inhibiting substances.
8. Where the bond between existing concrete and reinforcement has been destroyed or where more than half the diameter of the bar is exposed, remove the concrete adjacent to the bar to a depth that will permit the concrete repair mortar to bond to the periphery of the bar. Provide a minimum 3/4" clearance around the reinforcement or "1.5x" the maximum aggregate size, whichever is greater.
9. Apply a Type A epoxy compound in accordance with Section 926 of the FDOT Specifications to the existing concrete surfaces prior to placing the fresh repair mortar.
10. Restore concrete surfaces using approved materials in accordance with Section 926 or Section 930 of the FDOT Specifications. Select materials suitable for application, including orientation (e.g. horizontal, vertical or overhead application) and thickness. Mix, place and cure repair materials in accordance with manufacturer's recommendations. Finish repair materials flush with the original concrete surface unless noted otherwise. The surface finish shall meet the requirements for a general surface finish per Section 400 of the FDOT Specifications.

Payment will be made under:

Item No. 960-E Culvert Intrusion Repair – EA

F. TOP SLAB INLET ACCESS REPAIR

Description:

Repair inlet access where access holes have been "cut" through the top slab. Reference Figures 5.1 and 5.2 for additional notes and details

Top Slab Surface Preparation Notes:

1. Shore the top slab in the vicinity of the inlet opening. Provide shop drawings and calculations, signed and sealed by a Florida registered professional engineer, that demonstrate the temporary shoring to be used. The shop drawings and calculations shall conform to Section 5 of the FDOT Standard Specifications and the AASHTO Guide Design Specifications for Bridge Temporary Works, current edition.
2. Measure the top slab width at each inlet opening and list the measurements on the shop drawings. Provide hot dipped galvanized angles (4 - L6 x 6 x 1) at each opening to provide supplemental supports. Galvanizing shall conform to ASTM A153. The angles shall terminate within 1 inch of the culvert wall face. Any chamfered corners shall be removed to the wall vertical face.

Shop Drawings:

1. As a minimum, the shop drawings will include:
   a. The location and a unique identifier of each inlet to be repaired.
   b. Culvert span, top slab thickness and earth fill at the inlet.
   c. The proposed inlet opening size and edge distance to each culvert wall. Superimpose the inlet barrel and identify the inlet construction materials. Identify the edge distance between the inside face of the manhole and proposed opening edge.
   d. Size, location and orientation of each rebar to be cut.
   e. A plan view at ground level at the inlet repair of any structure that provides a 50 psf (or larger) surcharge, any tree larger than 6 ft, adjacent roadway(s), and similar dead or surcharge loads within 30 ft of the inlet.
   f. Provide a panoramic photographic documentation at ground level at the inlet repair at a 30 degree (±) rotation. For consistency, the initial photograph shall be facing north with successive photographs in a clockwise direction. The photographs shall be date stamped.
   g. Submit 10 copies of the shop drawings for review and approval prior to initiating the repair. For each submission, allow 20 days for the City to review.

Repair Procedure:

1. Mark and cut full depth along the inlet opening to square the opening and remove deleterious concrete. Note: This repair is designed for a top slab inlet opening less than 2 ft in any dimension. If the opening exceeds 2 ft, do not proceed with cutting the rebar or top slab. Immediately notify the Engineer of the expected cut size to establish the preferred repair.
2. Apply a galvanizing compound to the face of all exposed reinforcing steel. The galvanizing compound shall conform to FDOT Specification 975.
3. After the galvanizing compound has dried (min. 24 hrs), apply two (2) coats of a mastic epoxy along the vertical face of the inlet opening. Allow the first mastic coating to dry (min. 24 hrs) prior to applying the second coat. The epoxy mastic shall conform to FDOT Specification 926, Type M.
4. Grind along the culvert top slab to provide a flat surface to place the angle.
5. Use 3/4" diameter ITW Red Head Stainless Steel Trubolt Wedge Anchors (or approved equal) at 4 inch centers. Minimum embedment depth is 4 inches. Do not drill through the top slab.
6. Prior to installing the top slab angles, inform the City 72 hours in advance for the City to perform an inspection of the inlet repair. The City will not accept the repairs if they cannot verify the wedge anchor hole depth and that the holes drilled in the top slab match the holes in the angle. Any additional holes in the top slab caused by the Contractor (i.e., by hitting rebar or other embedded items) will be fill by the Contractor at no additional expense to the City.
7. Remove the temporary shoring after all angles are installed (at each opening).
8. Inform the City when each repair is completed. The City will perform a visual inspection of the completed inlet repair to approve the repair.

Payment will be made under:
Item No. 960-F Top Slab Inlet Access Repair – EA

G. ARTESIAN WELL REPAIR:

Description:
The artesian well repair is to be used at selected locations where located on the plans or identified in the field. To complete this repair, it will be necessary to remove a section of the culvert bottom slab and construct a "French drain" at the artesian well point to permit the pressurized water to flow into the culvert without creating additional cracking in the bottom slab. Storm water, local groundwater, and local surface water runoff through the culvert has the potential to impact this repair. It is required that adequate dewatering activities be incorporated to keep each artesian well repair area as dry as possible until the repair is completed, inspected and approved. Reference Figures 6.1 and 6.2 for additional notes and details.

Artesian Well Repair Preparation:

1. The Contractor shall install a relief well. The relief well shall include a pump and relief line(s) sufficient to draw the artesian well water away from its entrance through the culvert bottom slab. The tip of the relief line(s) shall be sufficient to depress and maintain the water surface a minimum of 2 ft below the culvert bottom slab.
2. The hydraulic conductivity of the natural soil is not known. The Contractor will employ an experienced person to use a piezometer, standpipe, manometer, Pitot tube or another approved method to measure the groundwater hydraulic head at the artesian well. This information will be required to size the pump and relief line(s) to permit the artesian well area to be excavated and prevent soil heave into the culvert through the open bottom slab.
3. Depth to groundwater is not known and is assumed variable along the length of the culvert. The groundwater depth is also expected to change seasonally and with local precipitation events.
4. The dewatering system will be installed to allow continuous dewatering operations without interfering with other construction activities. Water removed from the dewatering system will not require treatment prior to discharge. If turbidity becomes an issue, then hay bales or other filtering methods will be required.

Dewatering Plan:

1. The Contractor will submit a construction dewatering plan to the City and Engineer or review and approval. The artesian well repair shall not proceed until the dewatering plan is approved.
2. The dewatering plan will include:
   a. The measured hydraulic head.
   b. Pump location and size.
   c. Relief line(s) location and size.
   d. Storm water flow into the culvert cannot be prevented. The Contractor will make allowance to re-route storm water through/around the artesian well repair area while the repair is in progress. The dewatering plan will describe, and be supplanted with drawings, the method to re-route water around the artesian well while the repair is in progress.
   e. Tidal flows should also be expected to affect the artesian well hydraulic pressure and recharge the local soils near the repair area.

Repair Procedure:

1. Construct the water diversion system around the artesian well repair location.
2. The length and width of the sawcut shall be determined in the field. Sound around the existing artesian well to determine the limits of unsound concrete. Sawcut around the artesian well location, minimum size of the sawcut area is 1 ft x 1 ft. Concrete surfaces shall be structurally sound and free of bond inhibiting substances. The perimeter of the repair area shall have square edges. Concrete surfaces shall be intentionally roughened to a minimum profile of 1/4" to provide mechanical lock for the repair.

3. Remove the sawcut concrete and fill material below the culvert for a depth of 1 ft (±). Where reinforcing steel is cut and exposed, apply a galvanizing compound to the face of all exposed reinforcing steel. The galvanizing compound shall conform to FDOT Specification 975.

Place filter fabric and fill as specified on Figures 6.1.

Install the 4" dia. Schedule 80 PVC pipe 6" into the aggregate fill and flush with the culvert bottom slab. Note: The thickness of the culvert bottom slab is not known. The Contractor will measure the culvert bottom slab thickness to install the correct length of PVC pipe.

4. Drill 3/4" dia. holes 6 in. (min.) in the culvert bottom slab to match the existing rebar locations. Install #5 reinforcing steel in the bottom slab. The new reinforcing steel shall extend to the opposite side of the cut bottom slab.
5. Apply a Type A epoxy compound in accordance with Section 926 of the FDOT Specifications to the concrete surfaces prior to placing the repair concrete.
6. The Contractor will use a Class II concrete meeting FDOT Specification Section 346 to complete the bottom slab repair. As an alternate, the Contractor may propose a prepackaged concrete mix. To approve the prepackaged alternative, the Contractor must submit a quality control procedure for approval that describes how the product is mixed on site to ensure that the product is produced according to the manufacturer's inspections.
7. Restore concrete surfaces using approved materials in accordance with Section 926 or Section 930 of the FDOT Specifications. Select materials suitable for application and thickness. Mix, place and cure repair materials in accordance with manufacturer's recommendations. Finish repair materials flush with the original concrete surface unless noted otherwise. The surface finish shall meet the requirements for a general surface finish per Section 400 of the FDOT Specifications.
8. Provide the City with a minimum 72 hour notice so the City may inspect and approve the repair area and arrange for testing of the concrete. The City will use FDOT Specification 346-8 and 346-9 to accept the culvert slab concrete.
9. Inform the City when each repair is completed. The Contractor will replace deficient concrete at no expense to the City.

Payment will be made under:
Item No. 960-G Artesian Well Repair – EA

H. RESTORE SPALLED AREAS, GUNITE:

Description:

Repair spalled areas with gunite, if its application is approved by the Engineer. Gunite shall consist of an application of one or more layers of mortar or concrete conveyed through a hose and pneumatically projected at a high velocity against a prepared surface, finished, and cured. Place gunite, 3" thick, for Titanium Mesh Encapsulation of the restored spalled areas and in accordance with the American Concrete Institute (ACI) 506.2-95 Materials, Proportioning and Application of Gunite except as otherwise specified.

Materials:
Meet the following requirements:
Reinforcing Steel..... FDOT Specification Section 415
Coarse Aggregate..... FDOT Specification Section 901
Water..... FDOT Specification Section 923

Material shall be delivered, stored and handled to prevent contamination, segregation, corrosion or damage. Liquid admixtures shall be stored to prevent evaporation and freezing.

Wet-mix Process:
Wet-mix process shall consist of thoroughly mixing all the ingredients except accelerating admixtures, introducing the mixture into the delivery equipment and delivering the gunite by positive displacement to the nozzle. The wet-mix concrete shall be air jetted from the nozzle at high velocity onto the surface.

Dry-mix Process:
Dry-mix process shall consist of thoroughly mixing all the ingredients except accelerating admixtures and mixing water and conveying the mixture through the hose pneumatically and the mixing water is introduced at the nozzle. For additional descriptive information, the Contractor's attention shall be directed to the ACI 506R-05, Guide to gunite.

Bonding agents will not be allowed.

Qualifications:
Nozzlemen: All gunite nozzlemen on this project shall have the following qualifications:
1. A minimum of three years' experience in similar gunite application work.
2. ACI Certification for the gunite process used.
3. Experience record in accordance with FDOT Specification 105-8.8.3.

Construction Submittals:
Submit the following, at least 15 days before the planned start of gunite repair, to the Engineer for approval.

(a) Proposed methods of gunite placement and of controlling and maintaining facing alignment.
(b) Location and method of storage of raw gunite materials.
(c) gunite mix design including:
1) Type of Portland Cement
2) Aggregate source and gradation
3) Proportions of mix by weight and water-cement ratio
4) Proposed admixtures, manufacturer, dosage and technical literature.
5) Qualifications of Testing Laboratory
6) Gunite QC Plan
7) Previous strength test results for the proposed gunite mix completed within one year of start of gunite may be submitted for initial verification of the required compressive strengths at start of production work.

The Contractor will not be permitted to begin gunite work until the submittal requirements are satisfied and found acceptable to the Engineer.

Gunite Mix Design:
The Contractor will receive notification from the Engineer that the proposed mix design and method of placement of the gunite are acceptable before gunite repair placement work can begin.

Aggregate: Aggregate for gunite shall meet the following gradation requirements:

Sieve	Percent by weight (Mass)
Passing 1/2 inch	100.00
Passing 3/8 inch	90-100
Passing No. 4	70-85
Passing No. 8	50-70
Passing No. 16	35-55
Passing No. 30	20-35
Passing No. 50	8-20
Passing No. 100	2-10

Proportioning and Use of Admixtures:
The gunite shall be proportioned to be pumpable with the concrete pump furnished for the work, with a cementing materials content of at least 1,125 pounds per cubic yard and a water to cement ratio not greater than 0.45. Admixtures will not be permitted unless approved by the Engineer. The admixtures

shall be mixed thoroughly at the manufacturer's recommended rate. Accelerators, if used, shall be compatible with the cement, be non-corrosive to steel and not promote other detrimental effects such as cracking or excessive shrinkage.

Air Entrainment:

Air entrainment shall be required for wet-mix gunite. The air content measured at the truck shall be between 7 to 10 percent when tested in accordance with AASHTO T 152/ASTM C 231.

Strength and Durability Requirements:

The gunite mix shall be capable of attaining compressive strength of 2000 psi in three days and 4000 psi in 28 days. The average compressive strength of each set of three cores extracted from the test panels shall equal or exceed the specified compressive strength, with no individual core less than 75 percent of the specified compressive strength, in accordance with ACI 506.2R-95. The boiled absorption of gunite when tested in accordance with ASTM C 642 at seven days shall not exceed 8.0 percent.

Mixing and Batching:

Aggregate and cement may be batched by weight or by volume in accordance with the requirements of ASTM C 94 or AASHTO M 241/ASTM C 685. Mixing equipment shall thoroughly blend the materials in sufficient quantity to maintain placing continuity. Gunite shall be batched, delivered and placed within 90 minutes of mixing. Premixed and packaged gunite mix may be provided for on-site mixing. The packages shall contain materials in accordance with the material section of this specification. Placing time limit after mixing shall be per the manufacturer's recommendations.

Surface Preparation:

Remove unsound and delaminating concrete to sound material (or limits described in plans) by scarification or by chipping with light duty pneumatic or electric concrete chippers (30 pounds or less in general, 15 pounds or less adjacent to strand, reinforcing steel, and structural limits of construction). Remove concrete that is contaminated with grease or oil. If reinforcing steel becomes exposed, undercut around the reinforcing steel to provide a mechanical bond for the gunite. Roughen the remaining concrete surface to a ¼ inch amplitude.

Repair boundaries shall be at an out-sloping 30° angle to facilitate air and rebound escape. Chisel outer edge of repair area to a depth of ½ inch to prevent formation of feathered edges.

Blast clean all reinforcing steel exposed after concrete removal in accordance with The Society for Protective Coatings (SSPC) SP10 near white metal surface. Replace reinforcing steel that have lost 25 percent or more of their original diameter with new reinforcing steel spliced in place within the original cover, lapping steel to develop the full strength of the reinforcing or add dowel bars as detailed in the plans. See Figures 3.2 and 3.3. Dual reinforcing steel of equivalent or greater section may be used. Where the bond between existing concrete and reinforcing steel has been destroyed, or where the steel is exposed, remove the concrete adjacent to the reinforcing steel to a depth that will permit gunite to bond to the entire periphery of the exposed reinforcing steel. A clearance of ¾inch to 1inch behind the reinforcing steel is required for this purpose. Prevent cutting, stretching or damaging of exposed reinforcing steel.

Spray the existing concrete surfaces that will be in contact with the gunite with water and allow the surface to dry to a saturated surface-dry (SSD) condition.

Field Quality Control:

Production test panels shall be required and at the Contractor's expense. Qualified personnel shall perform gunite and core of the test panels with the Engineer present. Provide equipment, materials and personnel as necessary to obtain gunite cores for testing including construction of test panel boxes, field curing requirements and coring. Perform compressive strength testing and submit the results to the Engineer for

approval. Gunite final acceptance will be based on obtaining the specified 28 day compressive strength.

Production Test Panels:
At least one production test panel meeting the requirements of ASTM C1140 shall be furnished during each production application of gunite placed. The production test panels shall be constructed simultaneously with the gunite facing installation at times designated by the Engineer. Production test panels shall be made with the minimum full thickness and dimension of 21 x 21 inch and at least eight inches thick.

Test Panel Curing, Test Specimen Extraction and Testing:
Immediately after shooting, the test panels shall be field moist cured by covering and tightly wrapping with a sheet of material meeting the requirements of ASTM C 171 until delivered to the testing lab or test specimens are extracted. The test panels shall not be immersed in water. The test panels for the first 24 hours after shooting shall not be disturbed.

At least nine 3 inch diameter core samples shall be cut from each unreinforced production test panel for absorption and compressive strength testing. Contractor has the option of extracting the test specimens from test panels in the field or transporting to another location for extraction. The panels shall be kept in their forms when transported. Cores shall not be taken from the outer 6 inch of test panels measured in from the top outside edges of the panel form. The compressive strength cores ends shall be trimmed to provide test cylinders at least 3 inches long. The cores to be tested for boiled absorption shall not have the ends trimmed.

The cores and container shall be clearly marked to identify the core locations. For production testing, the production section of the unformed superstructure repair represented by the production test panel cores shall be marked on the cores and the container. Immediately wrap cores in wet burlap or material in accordance with the requirements of ASTM C 171 and seal in a plastic bag. Deliver cores to the testing lab, as approved by the Engineer, within 48 hours of shooting the panels.

Upon delivery to the testing lab, samples will be placed in the moist room until the time of test. When the test length of a core is less than twice the diameter, the correction factors given in AASHTO T 24/ASTM C 42 will be applied to obtain the compressive strength of individual cores. Three cores will be tested at 3 days and three cores will be tested at 28 days for compressive strength per AASHTO T 24/ASTM C 42. Three cores will be tested at 7 days for boiled absorption per ASTM C 642.

Gunite Facing Requirements:
Gunite Alignment Control: The final surface of the gunite shall maintain the existing concrete plane surface. Shooting wires, ground wires, or other devices acceptable to the Engineer shall be used to control the line, grade, and thickness of the gunite.

Surface Preparation: The surfaces to be gunite shall be cleaned of loose materials, rebound, overspray or other foreign matter that could prevent or reduce gunite bond. Adjacent surfaces shall be protected from overspray during shooting.

Delivery and Application: Maintain a clean, dry, oil free supply of compressed air sufficient for maintaining adequate nozzle velocity at all times and for simultaneous operation of a blow pipe for cleaning away rebound. The equipment shall be capable of delivering the premixed material accurately, uniformly and continuously through the delivery hose. Gunite application thickness, nozzle technique, air pressure and rate of gunite placement shall be controlled to prevent sagging or sloughing of freshly applied gunite.

The gunite shall be applied from the lower part of the area upwards to prevent accumulation of rebound. The nozzle shall be oriented at a distance and approximately perpendicular to the working face so that rebound will be minimal and compaction shall be maximized. Special attention shall be paid to

encapsulating reinforcement. Care shall be taken while encasing reinforcing steel and mesh to keep the front face of the reinforcement clean during shooting operations, so that the gunite builds up from behind, to encase the reinforcement and prevent voids and sand pockets from forming. A blow pipe shall be used to remove rebound and overspray immediately ahead of the nozzle. Rebound shall not be worked back into the construction. Rebound that does not fall clear of the working area shall be removed. Hardened rebound and hardened overspray shall be removed prior to the application of additional gunite using abrasive blast cleaning, chipping hammers, high pressure water blasting or other suitable techniques.

When the thickness of an individual gunite layer is 6 inch or greater or when gunite is conducted through two curtains of reinforcement, gunite shall be placed by the bench gunning method. The bench gunning method shall consist of building a thick layer of gunite from the bottom of the lift and maintaining the top surface at approximately a 45° slope.

When thickness of an individual gunite layer is 3 inch or greater and is unreinforced, install welded wire fabric (WWF). WWF shall be made electrically continuous with the existing reinforcing steel.

A clearly defined pattern of continuous horizontal or vertical ridges or depressions at the reinforcing elements after covered with gunite will be considered an indication of insufficient reinforcing cover or poor nozzle techniques. In this case the application of gunite shall be immediately suspended and the Contractor shall implement corrective measures before resuming the gunite operations. The gunite procedure may be corrected by adjusting the nozzle distance and orientation, by insuring adequate cover over the reinforcement, by adjusting the water content of the gunite mix or other means. Adjustment in water content of wet-mix shall require re-qualifying the gunite mix.

When using multiple layer gunite construction, the surface of the receiving layer shall be prepared before application of a subsequent layer, by either:

(a) Brooming the stiffened layer with a stiff bristle broom to remove all loose material, rebound, overspray or glaze, prior to the gunite attaining initial set.
(b) If the gunite has set, surface preparation shall be delayed 24 hours, at which time the surface shall be prepare by sandblasting or high pressure water blasting to remove all loose material, rebound, hardened overspray, glaze or other material that may prevent adequate bond.

Defective Gunite:

Gunite surface defects shall be repaired as soon as possible after placement. Gunite that exhibits segregation, honeycombing, laminations, voids or sand pockets shall be removed and replaced. In-place gunite determined not meeting the specified strength requirement will subject to remediation as approved by the Engineer. Possible remediation option includes removal and replacement

Construction Joints:

Construction joints shall be tapered uniformly toward the excavation face over a minimum distance equal to the thickness of the gunite layer. Square joints will not be permitted except at the expansion joint. The surface of the joints shall be rough, clean and sound. A minimum reinforcement overlap at reinforcement splice joints shall be provided. The surface of a joint shall be clean and wet before adjacent gunite is applied.

Final Face Finish:

After grade and alignment of the gunite is attained, gunite finish shall be a rubber float, steel trowel or smooth screed finish to match profile and finish of the existing concrete surface.

Weather Limitations:

The temperature of the gunite mix, when deposited, shall be not less than 50°F or more than 85°F. The air in contact with the gunite surfaces shall be maintained at temperatures above 32°F for a minimum of 7 days.

If the prevailing ambient temperature conditions (relative humidity, wind speed, air temperature and direct exposure to sunlight) are such that the gunite develops plastic shrinkage and/or early drying shrinkage cracking, gunite application shall be suspended. The Contractor shall reschedule the work to a time when more favorable ambient conditions prevail or adopt corrective measures, such as installation of sun screens, wind breaks or fogging devices to protect the work. Newly placed gunite exposed to rain that washes out cement or otherwise make the gunite unacceptable shall be removed and replaced at the Contractor's expense.

Curing: Permanent gunite shall be protected from loss of moisture for at least 7 days after placement while maintaining a temperature over 40°F. Cure gunite by methods that shall keep the gunite surfaces adequately wet and protected during the specified curing period. Curing shall commence within one hour of gunite application. When the ambient temperature exceeds 80°F, the work shall be planned such that curing can commence immediately after finishing. Curing shall be in accordance with the following requirements.

(a) Silica-fume gunite provides better bond strength and corrosion resistance properties but must always be continuously moist-cured to prevent plastic shrinkage cracking and assure proper strength gain and surface durability. Dry-mix gunite using pre-bagged mixes with silica-fume shall be moist cured for 7 days. The use of fogging nozzles can be very helpful in maintaining a moist condition on all new surfaces. Sprinklers and soaker hoses can also provide adequate curing so long as it can be assured that all the surface area is maintained in a moist condition. The use of water-saturated burlap covered with plastic sheets or plastic-coated water-saturated geotextile fabrics can also be appropriate for certain structures.

(b) Membrane Curing. Curing compounds are satisfactory for curing if drying conditions are not severe. If the evaporation rate is > 0.2 lbs/ft^2/hr steps shall be taken as described in (a) above to augment or in lieu of using curing compounds. Curing compounds will not be permitted on any surface against which additional gunite or other cementitious finishing materials are to be bonded unless the surface is thoroughly sandblasted in a manner acceptable to the Engineer. Membrane curing compounds shall be spray applied as quickly as practical after the initial gunite set at rate of coverage of not less than 7.1 square feet per gallon.

Quality Control:

Include the work under this Technical Special Provision in the Contractor Quality Control General requirements set forth in Section 105 of the FDOT Specifications.

Method of Measurement:

The quantity to be paid for will be the volume of gunite in cubic feet authorized, furnished and installed and accepted to restore spalled areas. The method utilized in determining the volume will be the surface area in square feet multiplied by the average depth of such areas.

Basis of Payment:

Price and payment will be full compensation for all work specified in this Technical Special Provision.

Payment will be made under:

Item No. 960-H Restore Spalled Areas, Gunite – CF

I. VOID FILLING REPAIR:

Description:
Fill voids behind the culvert ceilings, walls or floor as directed by the Engineer.

Materials:
Use material with a low viscosity, high expansion rate and cure to a solid closed cell foam. Use a single component, moisture activated MDI-based polyurethane resin. Use a product that is designed to bind together and waterproof loose granular soils. It must withstand wet/dry cycles, permeate well, and react quickly with water to form a dense, impermeable semi-rigid hydrophobic polyurethane foam.

Submit three (3) copies of the product data sheets including documentation of the mix procedure, application, and storage requirements to the Engineer for approval 10 days prior to performing repair.

Performance Specifications:

Uncured Properties	Cured Properties	Catalyst Properties
Appearance: Black brown liquid	Tensile Strength: 368.1 kPa (56 psi)	Appearance: Light yellow liquid
Corrosiveness: Non-Corrosive	Density: 1,074 kg/m^3 (8.96 lbs/gal)	Viscosity: 35 cP @ 68°F (20°C)
Solids: 100%	Bending Strength: 213 psi	Flash Point: C.O.C. 320°F (160°C)
Viscosity: 40-60cP @ 70°F (21°C)	Bond Strength: 99 psi	
Flash Point: C.O.C. 365°F (185°C)	Shrinkage: 0%	
Specific Gravity: 1.114 @ 72°F (21°C)	Toxicity: Non-Toxic	
Specific Weight: 69.5 lbs./ft^3 (9.3 lbs/gal) ±3%	Expands: 1500% - 2000%	

The material must also be solvent-free, pumpable as a single component, have a controllable reaction time, and withstand wet/dry cycles.

Gel (Cure) Times for Chemical Grout (Min:Sec)			
Temperature (°F)	Half Catalyst	Full Catalyst	Double Catalyst
40°F	8:17	4:30	2:55
50°F	7:05	4:08	2:27
60°F	4:30	3:18	2:10
70°F	3:40	2:08	1:00

Mix Procedure:
Follow manufacturer's recommended preparation procedures.

Storage:
Store between 60°F - 85°F (16°C - 30°C) in a dry atmosphere. Keep lid tightly closed when not in use.

Application:
Apply the material according to manufacturer recommendations.

Acceptance:
Inform the City when each repair is completed. If the repair is to be used in conjunction with permanent repair methods listed above, the permanent repair acceptance criteria will govern.

If the repair is used for sealing off infiltration or voids only (non-structural), the repair will be accepted as adequate if the repair does not permit water to seep through the repair for 120 days after completion of the repair. Correct all deficient repairs as necessary at no additional expense to the City.

Payment will be made under:
Item No. 960-I Void Filling Repair – LBS

J. JOINT SEALING REPAIR:

Description:
Joint Sealing is intended for filling smaller cracks or leaks in joints that are not structural connections or as directed by the Engineer.

Materials:
Use a single component, moisture activated MDI/TDI blended polyurethane injection resin capable of expanding to 10 times its weight in water. Use a product that is designed to permeate tight cracks or joints and cures to form a resilient and flexible, closed-cell foam with superb adhesive qualities.

Submit three (3) copies of the product data sheets including documentation of the mix procedure, application, and storage requirements to the Engineer for approval 10 days prior to performing repair.

Performance Specifications:

Uncured Properties	Cured Properties
Appearance: Black resin	Appearance: Milky colored foam
Corrosiveness: Non-Corrosive	Toxicity: Non-Toxic
Solids: 100%	Expansion: 400% - 600%
Viscosity: 650-800cP @ 72°F (22°C)	
Flash Point: >200°F (>93°C)	
Specific Gravity: 1.147 @ 72°F (22°C) ±3%	
Specific Weight: 71.5 lbs./ft^3 (9.6 lbs./gal) ±3%	

Mix Procedure:
Follow manufacturer's recommended preparation procedures and application specifications.

Storage:
Store between 60°F - 100°F (16°C - 38°C) in a dry atmosphere.

Application:
Apply the material according to manufacturer recommendations.

Acceptance:
Inform the City when each repair is completed. If the repair is to be used in conjunction with any permanent repair method listed above, the permanent repair acceptance criteria will govern.

If the repair is used for sealing off infiltration or voids only (non-structural), the repair will be accepted as adequate if the repair does not permit water to seep through the repair for 120 days after completion of the repair. Correct all deficient repairs as necessary at no additional expense to the City.

Payment will be made under:
Item No. 960-J Joint Sealing – LBS

REFERENCES

FDOT Standard Specifications – July 2016 Florida Department of Transportation Standard Specifications for Road and Bridge Construction

FDOT Design Standards – FY 2016-17 Florida Department of Transportation Design Standards for Design, Construction, Maintenance and Utility Operations on the State Highway System

City of Tampa Stormwater Engineering Technical Standards

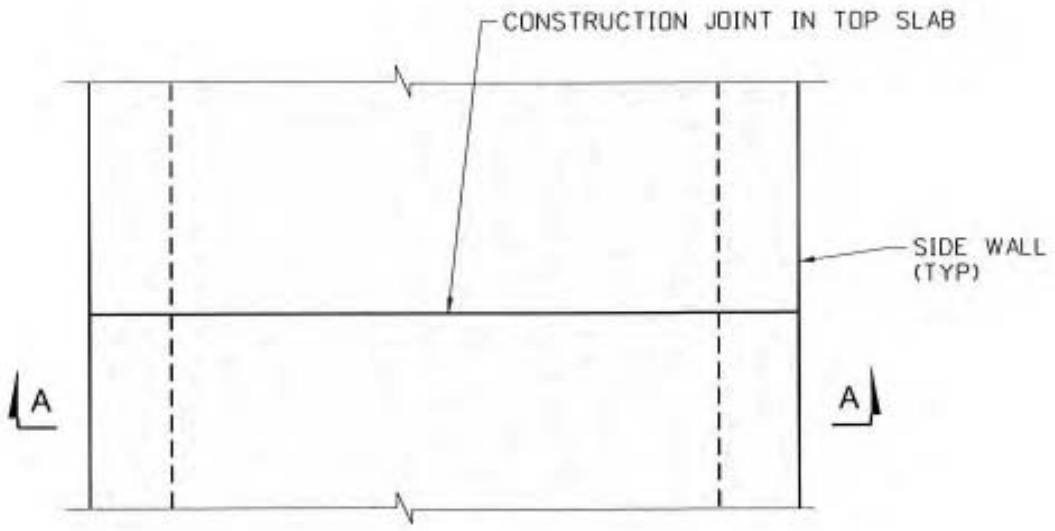

PLAN AT JOINT REPAIR

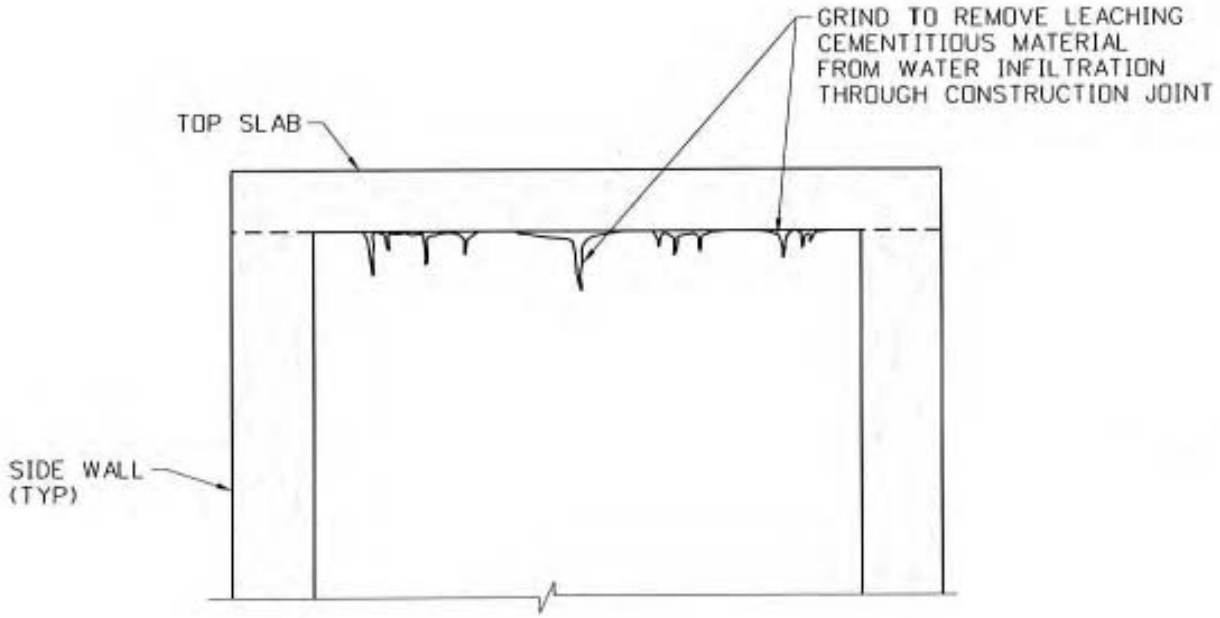

SECTION A-A

CITY of TAMPA **Department of Public Works** **Stormwater Engineering**	SHEET TITLE: FIGURE 1.1 – CRACK INJECTION REPAIR PROJECT NAME: CONTRACT # 14–C–00057 CITYWIDE BOX CULVERT REHABILITATION

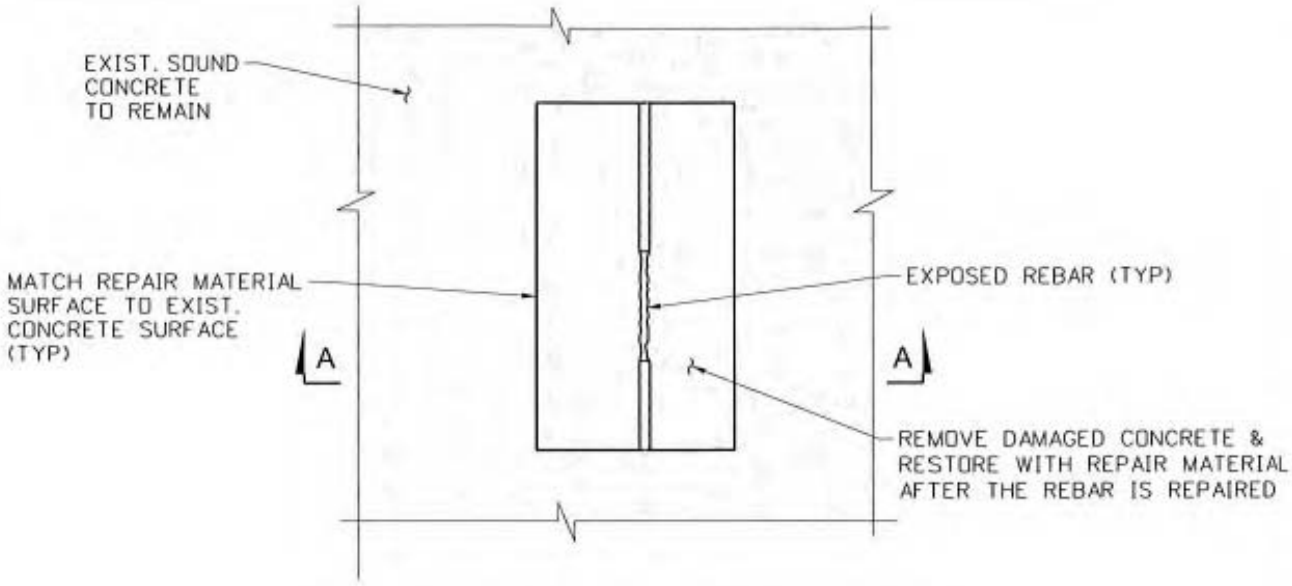

REFLECTED PLAN - EXPOSED REBAR REPAIR

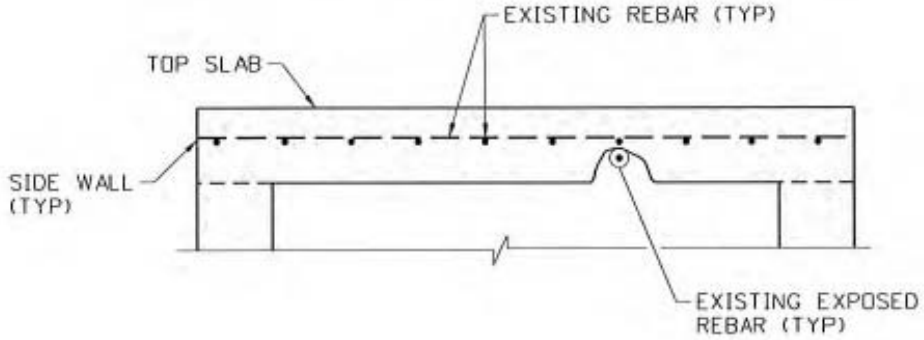

SECTION A-A - EXISTING CONDITION

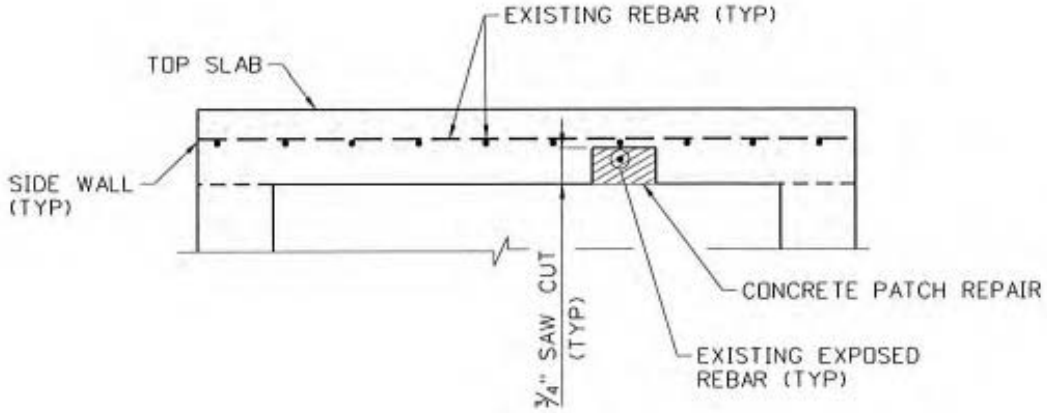

SECTION A-A - REPAIR CONDITION

CITY of TAMPA **Department of Public Works** **Stormwater Engineering**	SHEET TITLE: FIGURE 2.1 – MINOR SPALL REPAIR PROJECT NAME: CONTRACT # 14–C–00057 CITYWIDE BOX CULVERT REHABILITATION

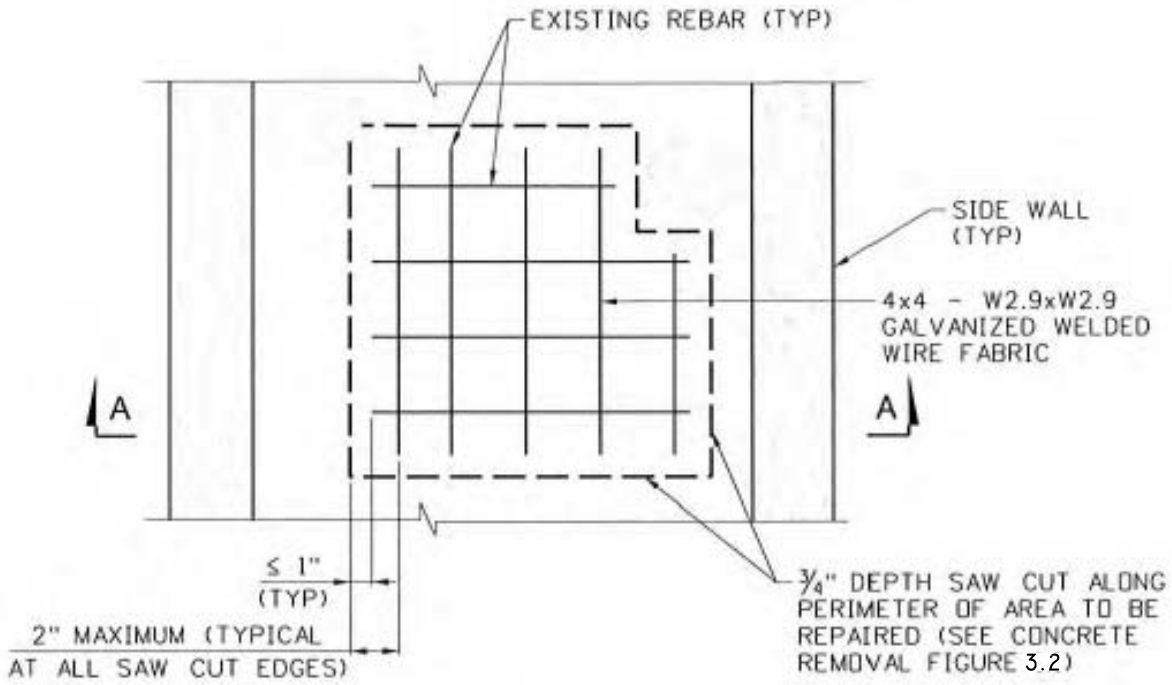

REFLECTED PLAN AT SLAB SPALLS

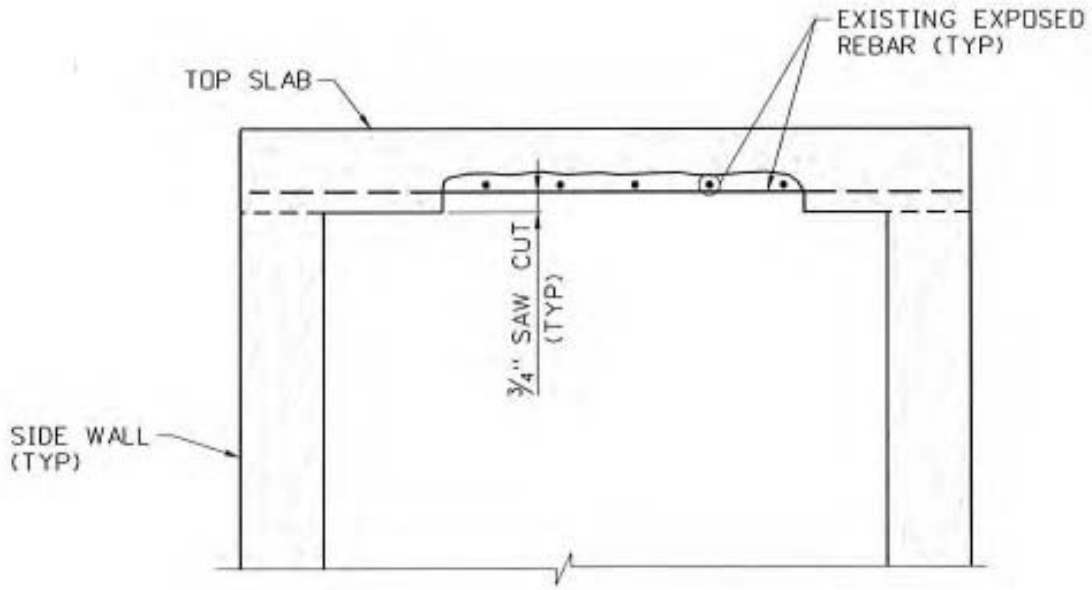

SECTION A-A

CITY of TAMPA **Department of Public Works** **Stormwater Engineering**	SHEET TITLE: FIGURE 3.1 – MAJOR SPALL REPAIR PROJECT NAME: CONTRACT # 14–C–00057 CITYWIDE BOX CULVERT REHABILITATION

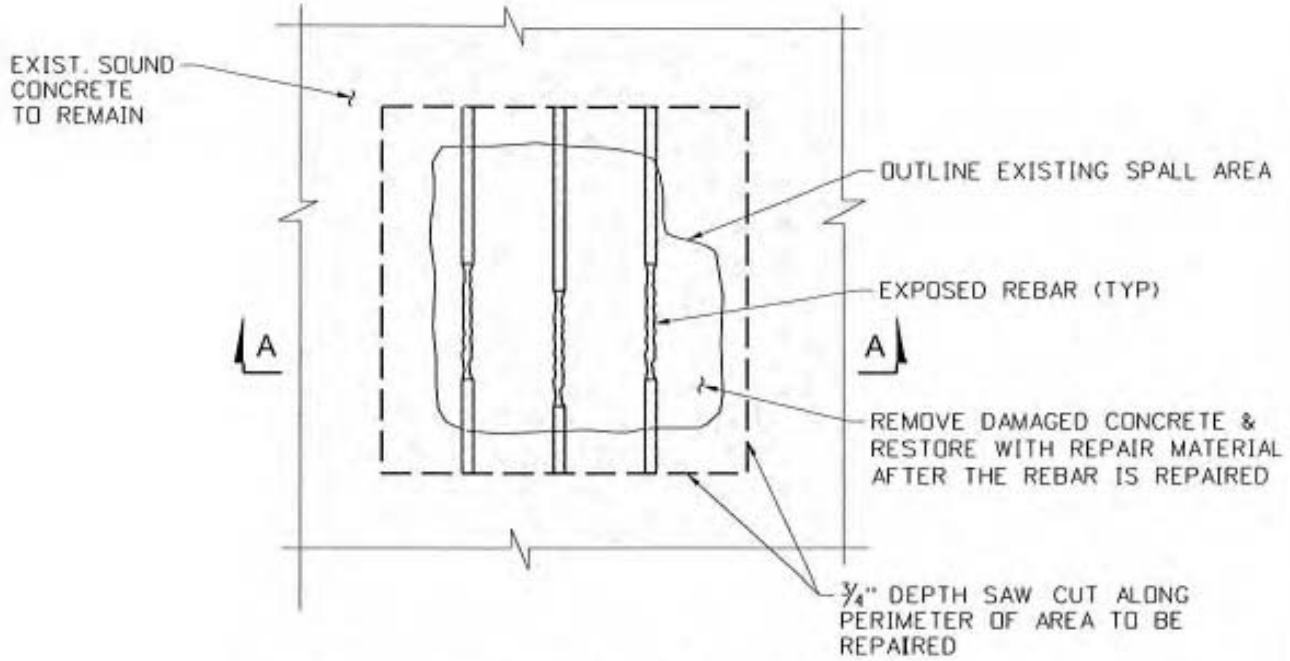

REFLECTED PLAN - EXPOSED REBAR REPAIR

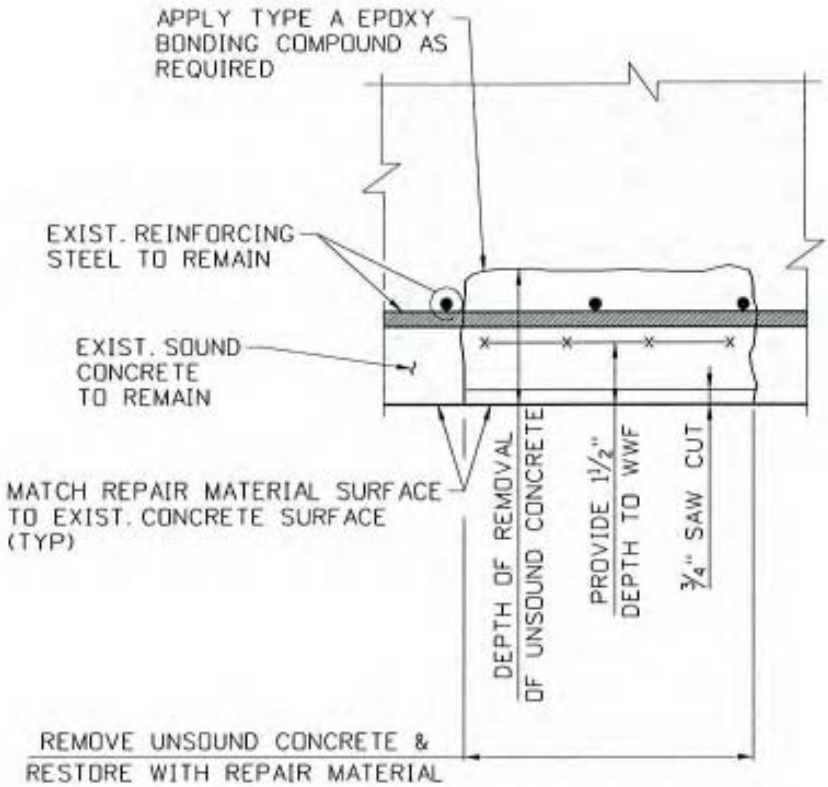

SECTION A-A

CITY of TAMPA **Department of Public Works** **Stormwater Engineering**	SHEET TITLE: FIGURE 3.2 – MAJOR SPALL REPAIR PROJECT NAME: CONTRACT # 14–C–00057 CITYWIDE BOX CULVERT REHABILITATION

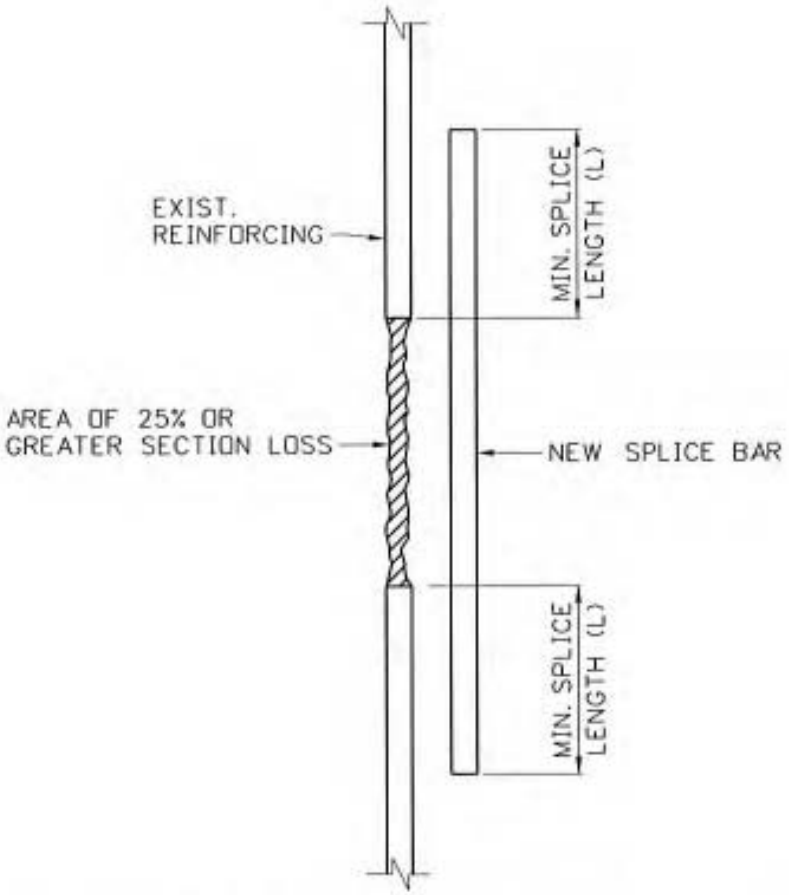

EXISTING BAR SIZE	SPLICE BAR SIZE	LENGTH (L)
#4 BAR	#4 BAR	14"
#5 BAR	#5 BAR	17"
#6 BAR	#6 BAR	22"

EXISTING REBAR REPAIR

CITY of TAMPA **Department of Public Works** **Stormwater Engineering**	SHEET TITLE: FIGURE 3.3 – MAJOR SPALL REPAIR PROJECT NAME: CONTRACT # 14–C–00057 CITYWIDE BOX CULVERT REHABILITATION

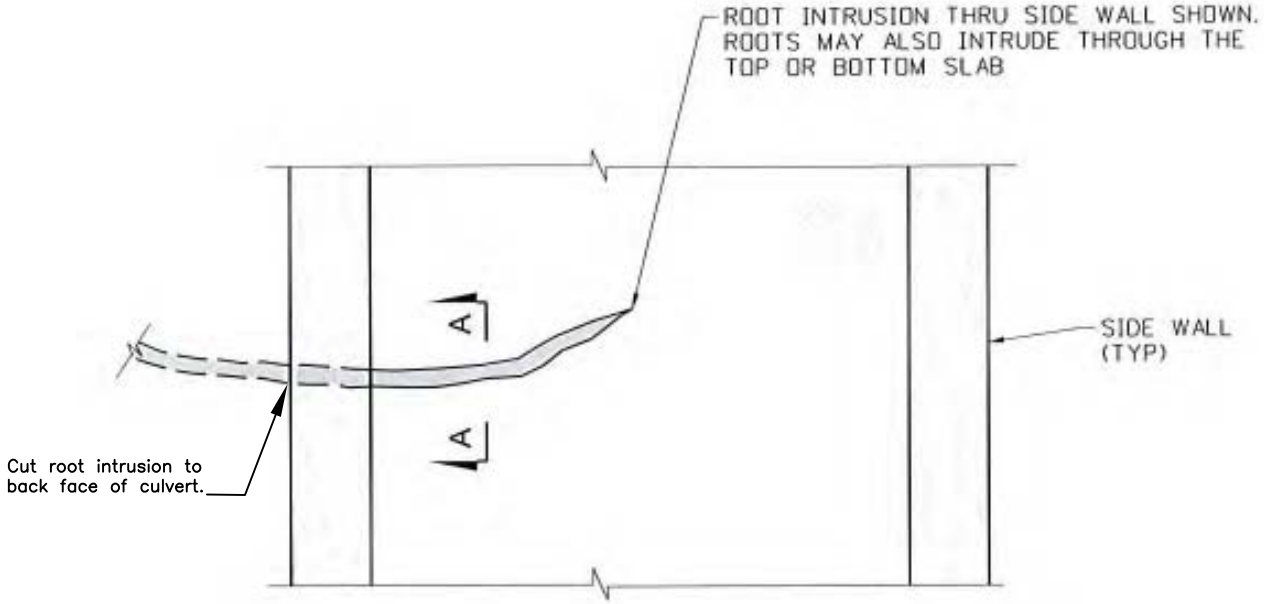

PLAN THRU TOP SLAB

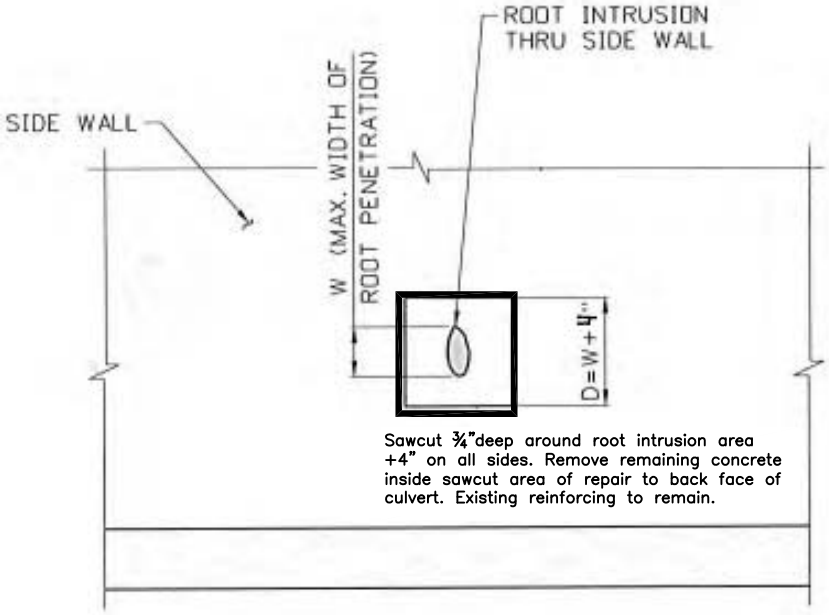

SECTION A-A

CITY of TAMPA **Department of Public Works** **Stormwater Engineering**	SHEET TITLE: FIGURE 4.1 – CULVERT ROOT INTRUSION REPAIR PROJECT NAME: CONTRACT # 14–C–00057 CITYWIDE BOX CULVERT REHABILITATION

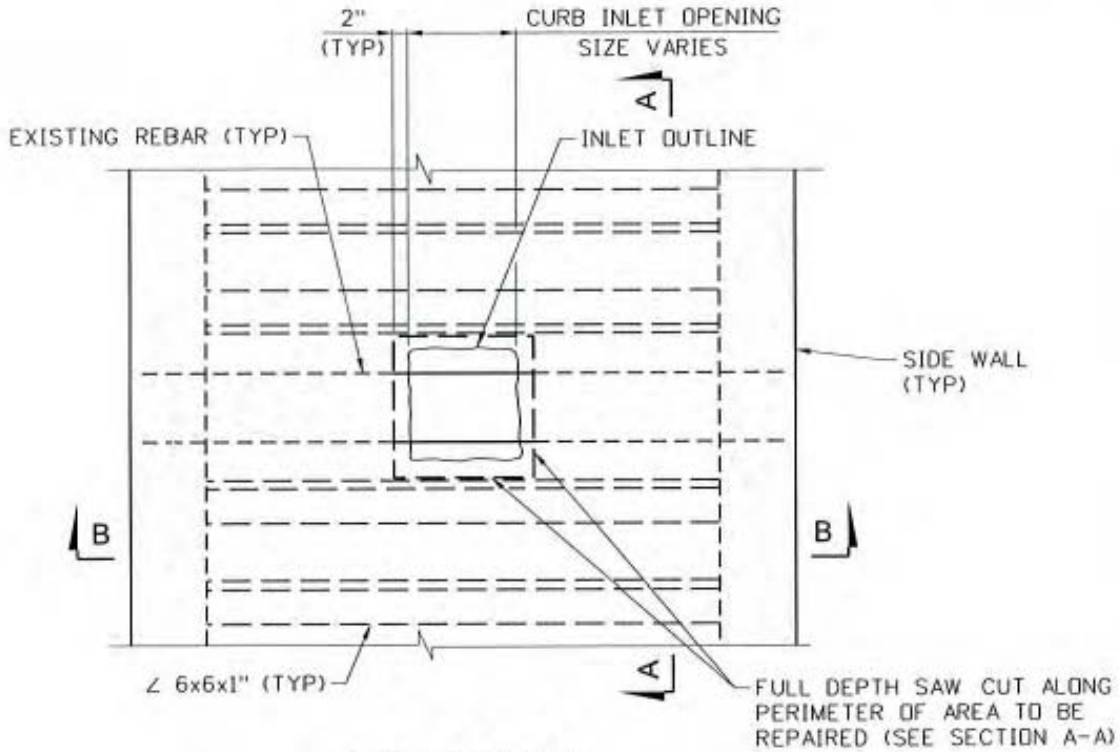

PLAN - TOP SLAB

NOTES:

1. THE TOP SLAB INLET REPAIR INCLUDED THESE ASSUMPTIONS:
   IF THE FIELD CONDITIONS INCLUDE GREATER LOADS, OR THE CULVERT AS-CONSTRUCTED CONDITION IS LESS THAN ASSUMED, THEN CONTACT THE ENGINEER FOR THE REVISED DESIGN.

   A. EXISTING CONCRETE COMPRESSIVE STRENGTH = 3,000 PSI.

   B. EXISTING REINFORCEMENT STEEL IS GRADE 40. AREA OF STEEL PER FOOT IS 1.19 IN^2 PER FT.

   C. CONCRETE CREEP IS NEGLECTED DUE TO AGE OF EXISTING CONCRETE.

   E. MINIMUM TOP SLAB THICKNESS OF 6 INCHES USED FOR SECTION PROPERTIES.

   F. MAXIMUM DEPTH OF FILL OVER BOX CULVERT IS 5 FEET.

2. FOR SECTIONS A-A AND B-B, SEE FIGURE 5.2

CITY of TAMPA **Department of Public Works** **Stormwater Engineering**	SHEET TITLE: FIGURE 5.1 – TOP SLAB INLET ACCESS REPAIR
	PROJECT NAME: CONTRACT # 14–C–00057 CITYWIDE BOX CULVERT REHABILITATION

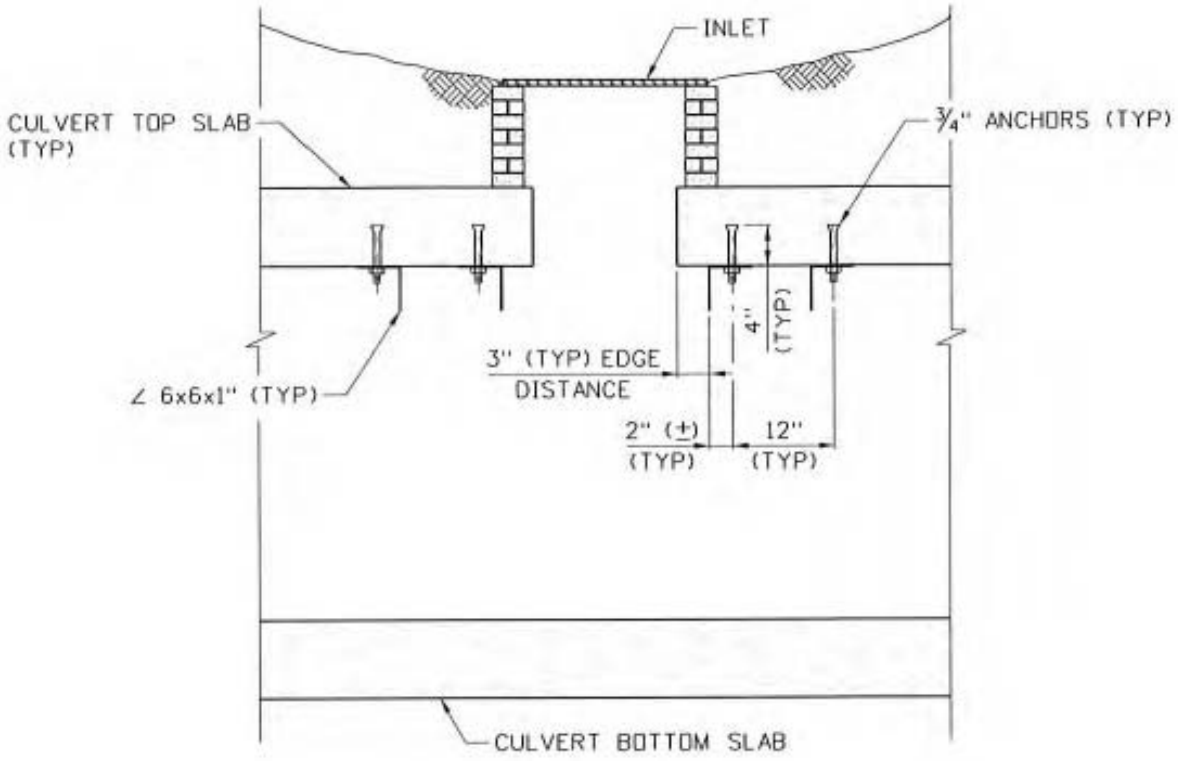

SECTION A-A

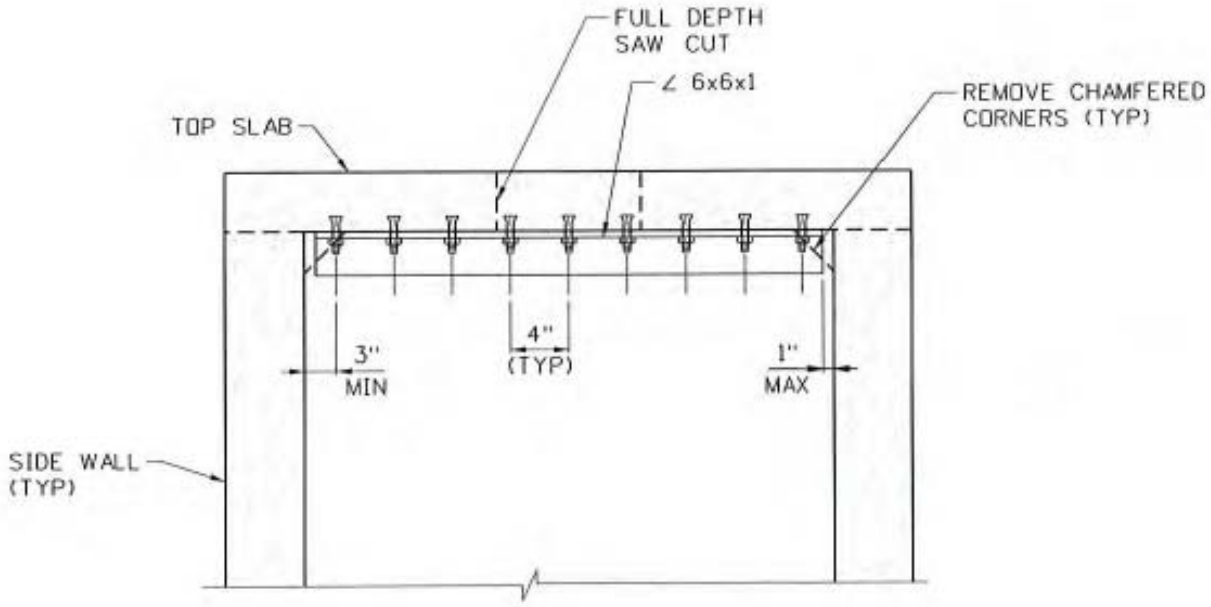

SECTION B-B

CITY of TAMPA **Department of Public Works** **Stormwater Engineering**	SHEET TITLE: FIGURE 5.2 – TOP SLAB INLET ACCESS REPAIR PROJECT NAME: CONTRACT # 14–C–00057 CITYWIDE BOX CULVERT REHABILITATION

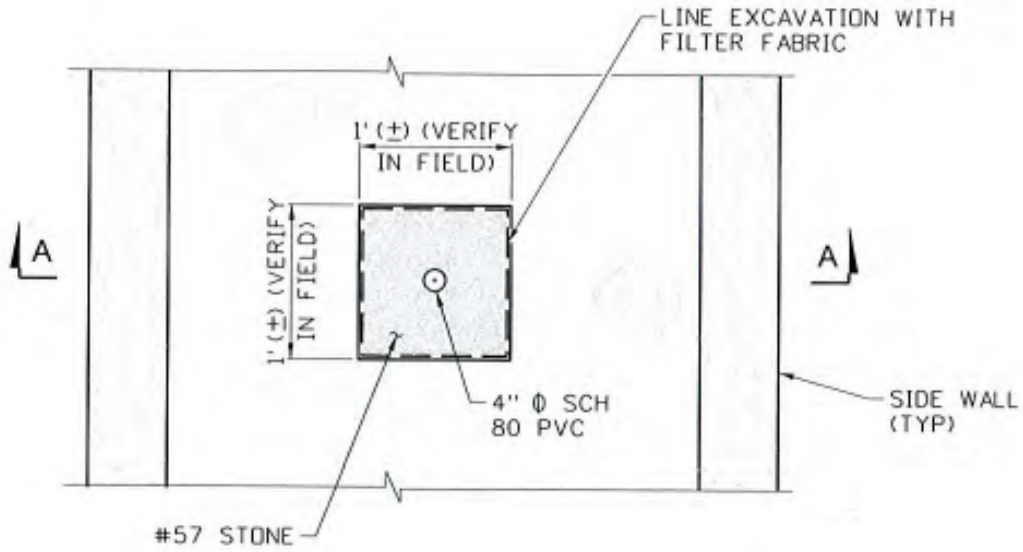

BOTTOM PLAN AT ARTESIAN WELL

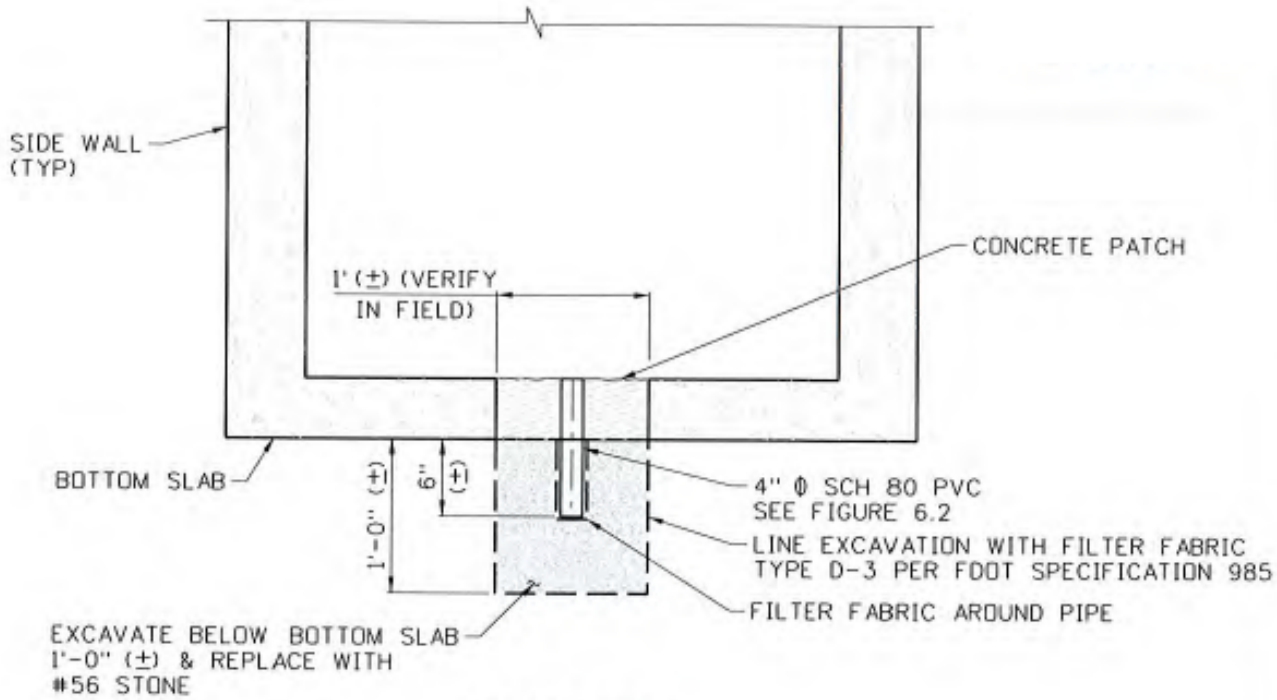

SECTION A-A

CITY of TAMPA **Department of Public Works** **Stormwater Engineering**	SHEET TITLE: FIGURE 6.1 – ARTESIAN WELL REPAIR PROJECT NAME: CONTRACT # 14–C–00057 CITYWIDE BOX CULVERT REHABILITATION

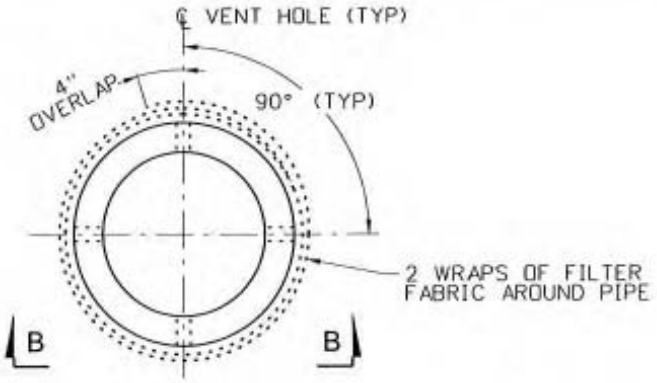

PLAN - SCH 80 PVC PIPE

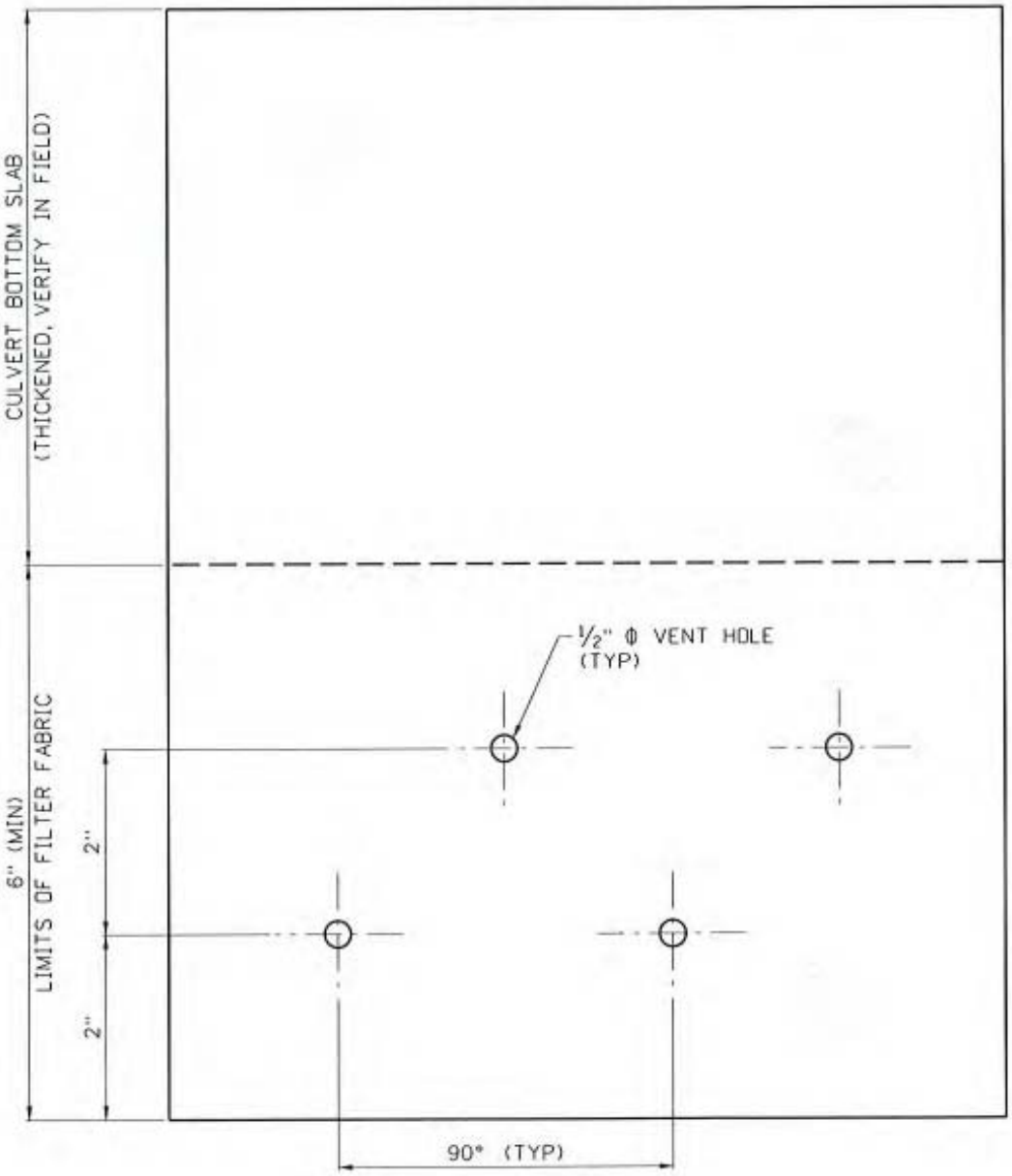

VIEW B-B DEVELOPED

CITY of TAMPA **Department of Public Works** **Stormwater Engineering**	SHEET TITLE: FIGURE 6.2 – ARTESIAN WELL REPAIR PROJECT NAME: CONTRACT # 14–C–00057 CITYWIDE BOX CULVERT REHABILITATION

Examples of Typical Structural Problems

Within the City's Box Culverts

Project 16 – C – 00022

Department of

Transportation and Stormwater Services

PHOTOGRAPHS OF TYPICAL SPALLING

These photographs depict examples of structural problems typically found in the box culverts within the City of Tampa and are not meant to represent specific problems or locations.

These photographs depict examples of structural problems typically found in the box culverts within the City of Tampa and are not meant to represent specific problems or locations.

These photographs depict examples of structural problems typically found in the box culverts within the City of Tampa and are not meant to represent specific problems or locations.

These photographs depict examples of structural problems typically found in the box culverts within the City of Tampa and are not meant to represent specific problems or locations.

PHOTOGRAPHS OF TYPICAL ACCESSWAYS

These photographs depict examples of structural problems typically found in the box culverts within the City of Tampa and are not meant to represent specific problems or locations.

These photographs depict examples of structural problems typically found in the box culverts within the City of Tampa and are not meant to represent specific problems or locations.

PHOTOGRAPHS OF TYPICAL LEAKING CRACKS

These photographs depict examples of structural problems typically found in the box culverts within the City of Tampa and are not meant to represent specific problems or locations.

These photographs depict examples of structural problems typically found in the box culverts within the City of Tampa and are not meant to represent specific problems or locations.

These photographs depict examples of structural problems typically found in the box culverts within the City of Tampa and are not meant to represent specific problems or locations.

PHOTOGRAPH OF ARTESIAN WELL IN FLOOR

These photographs depict examples of structural problems typically found in the box culverts within the City of Tampa and are not meant to represent specific problems or locations.

PHOTOGRAPHS OF TYPICAL ROOT INTRUSION

These photographs depict examples of structural problems typically found in the box culverts within the City of Tampa and are not meant to represent specific problems or locations.

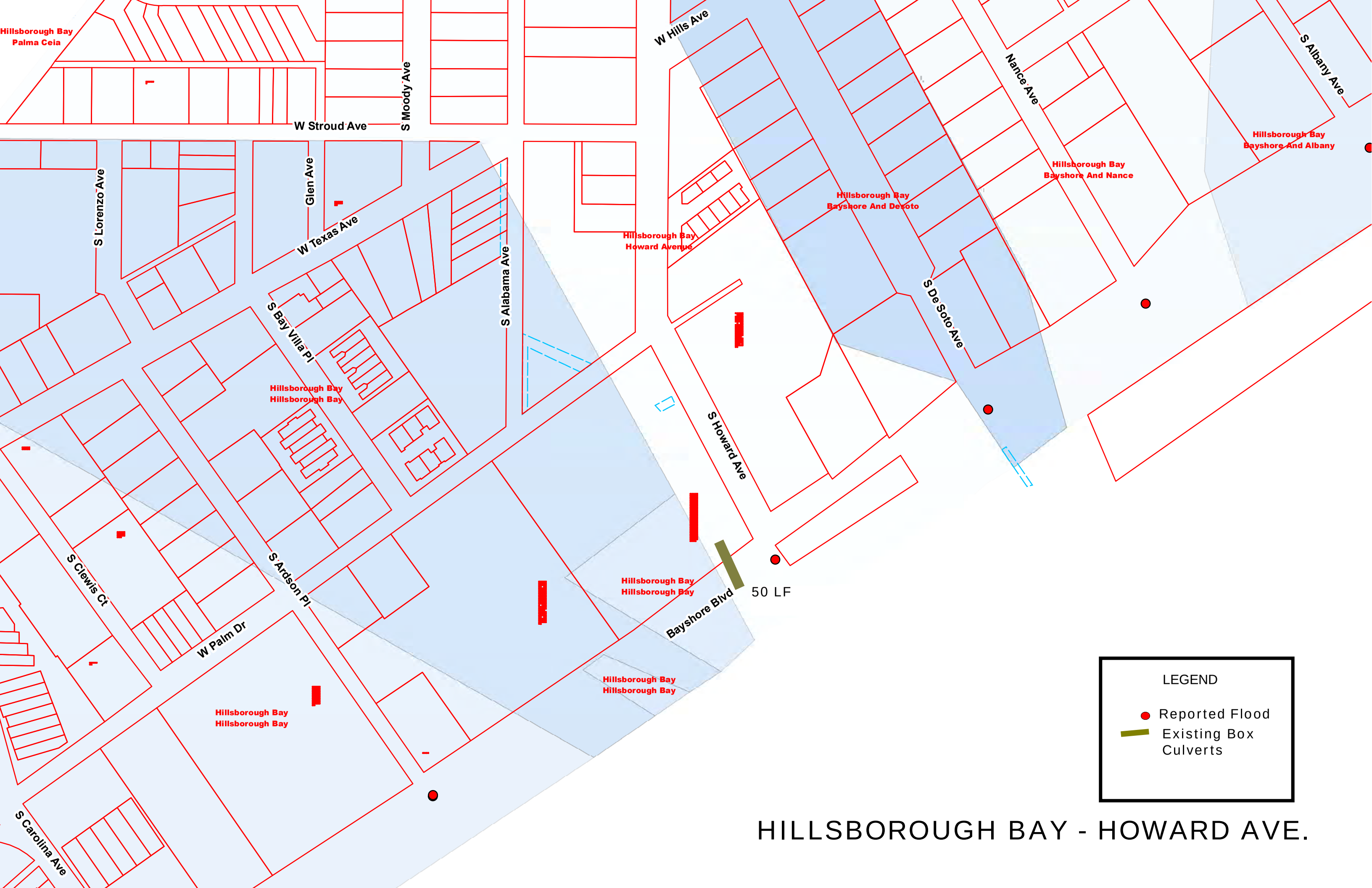

HILLSBOROUGH BAY - HOWARD AVE.

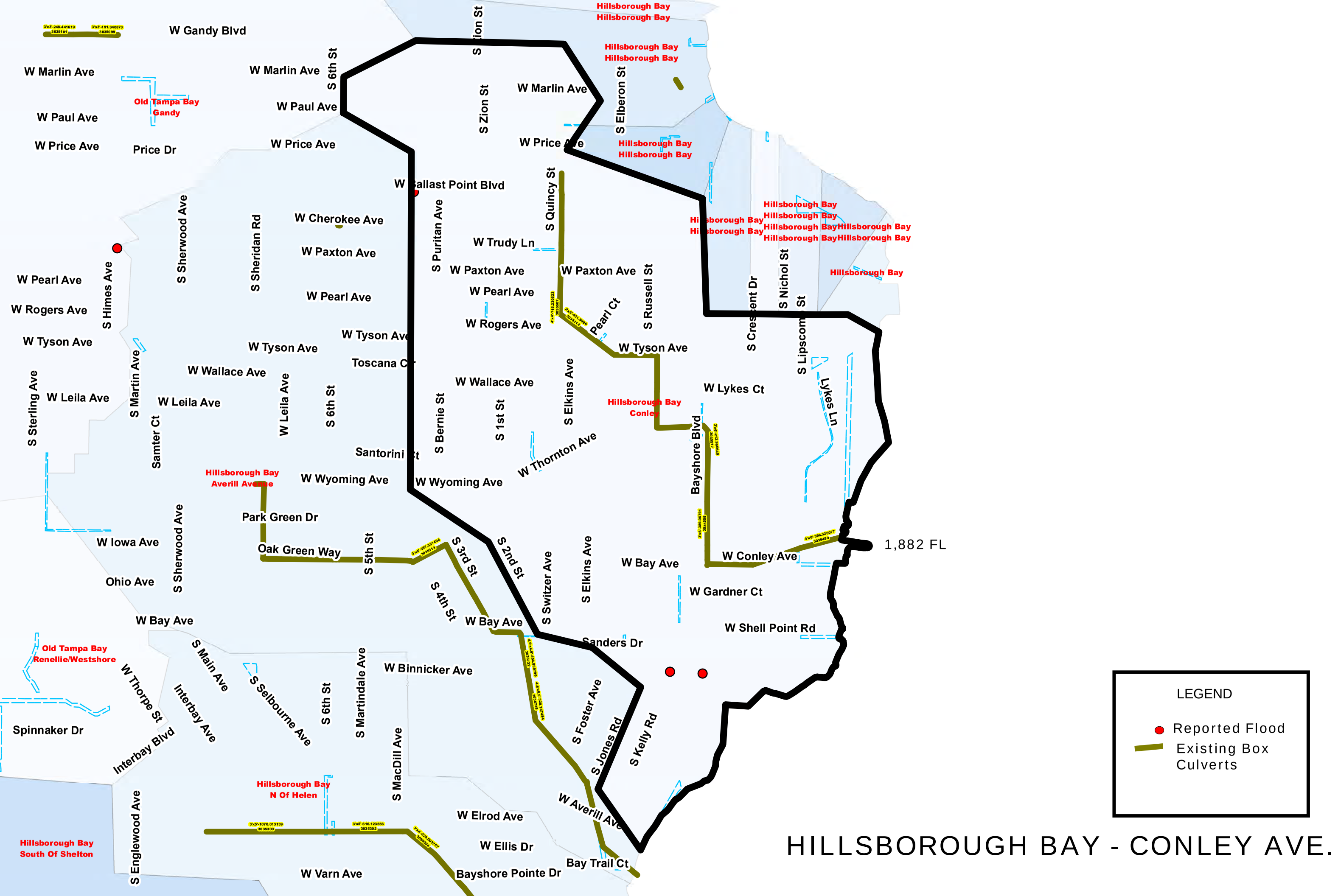

HILLSBOROUGH BAY - CONLEY AVE.

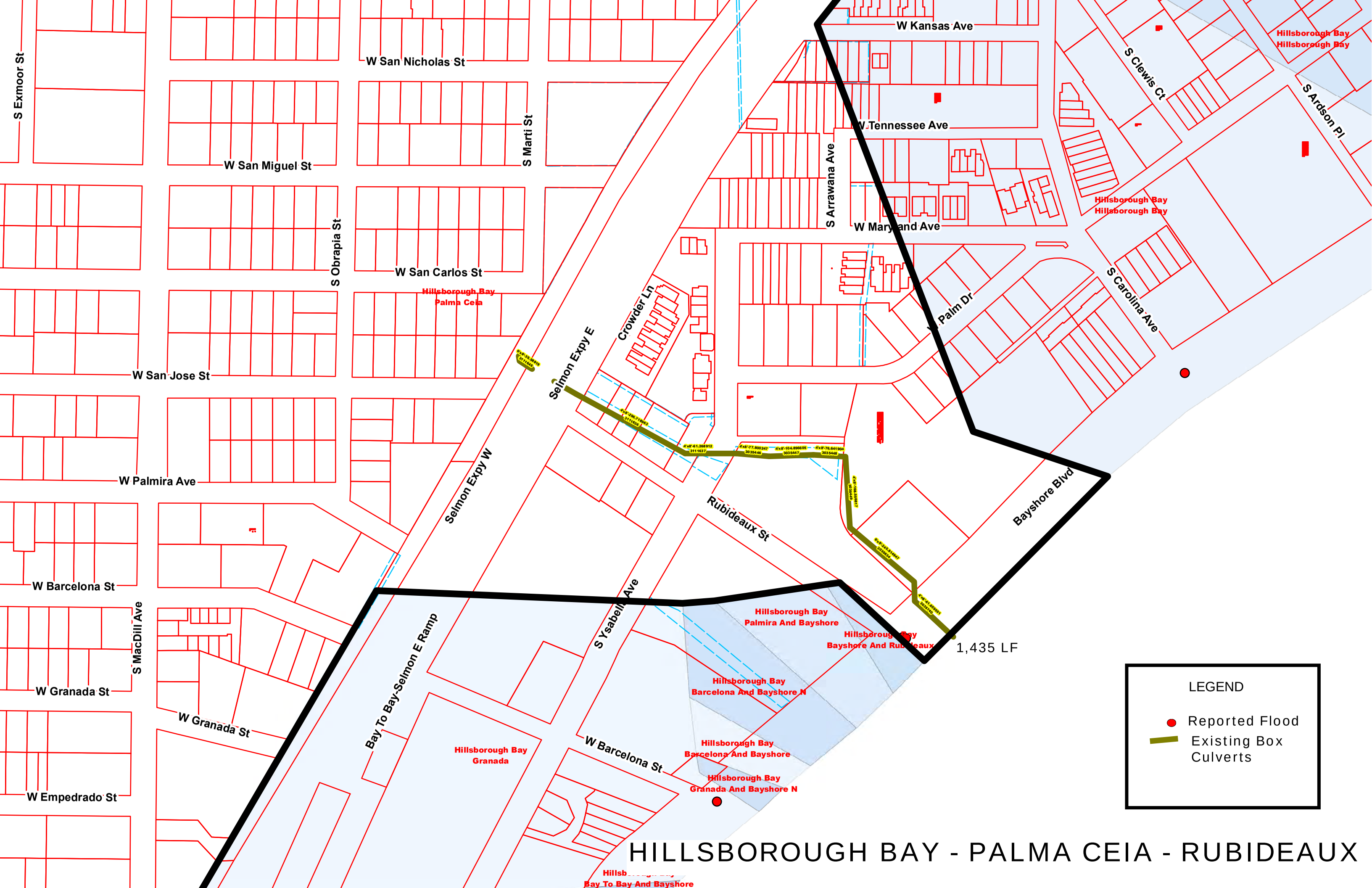
W Kansas Ave
W Tennessee Ave
W Maryland Ave
S Exmoor St
W San Nicholas St
S Marti St
W San Miguel St
S Obrapia St
W San Carlos St
W San Jose St
W Palmira Ave
W Barcelona St
S MacDill Ave
W Granada St
W Empedrado St
S Arrawana Ave
S Clewis Ct
S Ardson Pl
S Carolina Ave
Palm Dr
Crowder Ln
Selmon Expy E
Selmon Expy W
Rubideaux St
Bayshore Blvd
S Ysabella Ave
Bay To Bay-Selmon E Ramp
Hillsborough Bay
Hillsborough Bay
Hillsborough Bay
Hillsborough Bay
Palma Ceia
Hillsborough Bay
Granada
Hillsborough Bay
Palmira And Bayshore
Hillsborough Bay
Bayshore And Rubideaux
Hillsborough Bay
Barcelona And Bayshore N
Hillsborough Bay
Barcelona And Bayshore
Hillsborough Bay
Granada And Bayshore N
Hillsborough Bay
Bay To Bay And Bayshore
1,435 LF
LEGEND
Reported Flood
Existing Box Culverts
HILLSBOROUGH BAY - PALMA CEIA - RUBIDEAUX