`

CITY OF
TAMPA, FLORIDA

NOTICE TO BIDDERS, INSTRUCTIONS TO BIDDERS
PROPOSAL, BID BOND, FORM OF NOTICE OF AWARD,
AGREEMENT, PERFORMANCE BOND AND
SPECIFICATIONS

FOR

Contract 20-C-00012

Ignacio Haya Park Living Shoreline

Sheltered Market

City of Tampa
CONTRACT ADMINISTRATION DEPARTMENT
TAMPA MUNICIPAL OFFICE BUILDING
306 E. JACKSON STREET - 4TH FLOOR NORTH
TAMPA, FLORIDA 33602

NOVEMBER 2019

CITY OF TAMPA
CONTRACT ADMINISTRATION DEPARTMENT
306 E. Jackson Street 280A4N
Tampa, FL 33602

****

BID NOTICE MEMO
****

Bids will be received no later than 1:30 p.m. on the indicated Date(s) for the following Project(s):
****

Only bids from current City of Tampa Certified Small Local Business Enterprises or Underutilized Women/Minority Business Enterprises will be considered for this project.

CONTRACT NO.: 20-C-00012; Ignacio Haya Park Living Shoreline

BID OPENING: 1:30PM, Tuesday, December 17, 2019 **ESTIMATE:** $152,876 **SCOPE:** Construction of new, and repair of existing, breakwater in the Hillsborough River including tree protection, backfilling and grading of eroded shoreline, rip-rap stabilization of shoreline around existing stormwater outfalls, mechanical and chemical removal of invasive plant species, grading of stormwater ditch, shoreline plantings and landscaping with all associated work required for a complete project in accordance with the Contract Documents. **PRE-BID CONFERENCE:** 2:00PM, Tuesday, December 03, 2019. Attendance is not mandatory, but recommended.
****

Bids will be opened in the 4th Floor Conference Room, Tampa Municipal Office Building, 306 E. Jackson Street, Tampa, Florida 33602. Pre-Bid Conference is held at the same location unless otherwise indicated. Plans and Specifications and Addenda for this work may be examined at, and downloaded from, www.demandstar.com. Backup files are available at http://www.tampagov.net/contract-administration/programs/construction-project-bidding. **Email Questions to: contractadministration@tampagov.net .**

TABLE OF CONTENTS

BIDDING REQUIREMENTS

Notice to Bidders N-1
Instructions to Bidders ..... I-1a thru I-4
Insurance Requirements ..... INS-1 thru INS-2
MBD Form 70 ..... 1 Page

BID FORMS

Proposal ..... P-1 thru P-3
Good Faith Efforts Compliance Plan ..... GFECP
SLBE Solicited ..... DMI – Solicited
SLBE Utilized ..... DMI – Utilized
Bid Bond BB-1

CONTRACT FORMS

Agreement ..... A-1 thru A-15
Public Construction Bond ..... PB-1 thru PB-3

GENERAL PROVISIONS

General Provisions ..... G-1 thru G-10
Subcontractors Payment Form ..... DMI – Payments
Project Sign ..... Sign-1 thru Sign-2

SPECIFICATIONS

DIVISION 2

SECTION 01025 ..... Technical Provisions ..... 01025-1 thru 01025-24

PERMITS

Army Corps Permit ..... 9 pages
Environmental Resource Permit, DEP ..... 13 pages

Plans 25 Sheets of Drawings

NOTICE TO BIDDERS
CITY OF TAMPA, FLORIDA
Contract 20-C-00012; Ignacio Haya Park Living Shoreline

Sealed Proposals will be received by the City of Tampa no later than 1:30 P.M., December 17, 2019, in the 4th Floor Conference Room, Tampa Municipal Office Building, 306 E. Jackson Street, Tampa, Florida, there to be publicly opened and read aloud.

Only bids from current City certified Small Local Business Enterprises (SLBEs), or Underutilized Women/Minority Business Enterprises (WMBEs) within the industry category of "Construction" shall be considered (see MBD Form-70).

NOTE: The City of Tampa's WMBE policies are narrowly-tailored to identify **Underutilized** WMBEs by industry category. WMBE Bidders/Proposers who are certified in the **Underutilized** category for the work/score detailed herein are eligible for award. In all cases, the Bidder/Proposer must be WMBE and/or SLBE certified prior to the opening date and time of the bid/proposal. As proof of certification, include copies of the applicable City of Tampa WMBE and SLBE certificates in the bid/proposal.

The proposed work is to include, but not be limited to, construction of new, and repair of existing, breakwater in the Hillsborough River including tree protection, backfilling and grading of eroded shoreline, rip-rap stabilization of shoreline around existing stormwater outfalls, mechanical and chemical removal of invasive plant species, grading of stormwater ditch, shoreline plantings and landscaping, with all associated work required for a complete project in accordance with the Contract Documents.

The Instructions to Bidders, Proposal, Form of Bid Bond, Agreement, Form of Public Construction Bond, Specifications, Plans and other Contract Documents are posted at DemandStar.com. Backup files may be downloaded from http://www.tampagov.net/contract-administration/programs/construction-project-bidding. One set may be available for reference at the office of the Contract Administration Department, Municipal Office Building, Fourth Floor North, City Hall Plaza, Tampa, Florida 33602.

Each Proposal must be submitted on the Proposal form included in the Specifications and must be accompanied by a certified check or cashier's check on a solvent bank or trust company in compliance with Section 255.051, Florida Statutes, made payable to the City of Tampa, in an amount of not less than five per cent of the total bid, or a Bid Bond, of like amount, on the form set forth in the Contract Documents, as a guarantee that, if the Proposal is accepted, the Bidder will execute the Proposed Contract and furnish a Public Construction Bond within twenty (20) days after receipt of Notice of Award of Contract.

To be eligible to submit a proposal, a Bidder must hold the required and/or appropriate current license, certificate, or registration (e.g. DBPR license/certificate of authorization, etc.) in good standing at the time of receipt of Bids. **Per Section 489.131, Florida Statutes, Proposals submitted for the construction, improvement, remodeling, or repair of public projects must be accompanied by evidence that the Bidder holds the required and/or appropriate current certificate or registration, unless the work to be performed is exempt under Section 489.103, Florida Statutes**.

The City of Tampa reserves the right to reject any or all Bids and to waive any informalities in the Bid and/or Bid Bond. Acceptance or rejection of Proposals will be made as soon as practicable after the Proposals are received, but the City reserves the right to hold Proposals for ninety (90) days from the date of Opening.

Bid Protest Procedures: Unless subsequently indicated otherwise, in a revised posting on the Department's web page for Construction Project Bidding, the City of Tampa intends to award the referenced project to the lowest bidder listed in the tabulation posted on or about the date of Bid Opening. A bidder aggrieved by this decision may file a protest not later than 4:30 P.M., five (5) business days from the first posting thereof, pursuant to City of Tampa Code Chapter 2, Article V, Division 3, Section 2-282, Procurement Protest Procedures. Protests not conforming therewith shall not be reviewed.

> Pursuant to Section 2-282, City of Tampa Code, during the solicitation period, including any protest and/or appeal, NO CONTACT with City officers or employees is permitted from any bidder or proposer, other than as specifically stated in this solicitation and as follows:
> Director of the Contract Administration Department (CAD)
> Contracts Management Supervisor, Jim Greiner
> Contract Officer, Jody Gray
> City legal department

Any Requests For Information must be submitted by email to ContractAdministration@tampagov.net

A person or affiliate who has been placed on the convicted vendor list following a conviction for a public entity crime may not submit a bid on a contract to provide any goods or services to a public entity, may not submit a bid on a contract with a public entity for the construction or repair of a public building or public work, may not submit bids on leases of real property to a public entity, may not be awarded or perform work as a contractor, supplier, subcontractor, or consultant under a contract with any public entity, and may not transact business with any public entity in excess of the threshold amount provided in Section 287.017, for CATEGORY TWO for a period of 36 months from the date of being placed on the convicted vendor list." Refer to Section 287.133, Florida Statues.

INSTRUCTIONS TO BIDDERS
SECTION 1 - SPECIAL INSTRUCTIONS

I-1.01 GENERAL:

The proposed work is the Ignacio Haya Park Living Shoreline in the City of Tampa, as required for a complete project, as shown on the plans and detailed in the specifications. The work is located on land owned or controlled by the City of Tampa.

To be eligible to submit a proposal, a Bidder must hold the required and/or appropriate current license, certificate, or registration (e.g. DBPR license/certificate of authorization, etc.) in good standing at the time of receipt of Bids. **Per Section 489.131, Florida Statutes, Proposals submitted for the construction, improvement, remodeling, or repair of public projects must be accompanied by evidence that the Bidder holds the required and/or appropriate current certificate or registration, unless the work to be performed is exempt under Section 489.103, Florida Statutes.**

I-1.02 FORM PREPARATION AND PRESENTATION OF PROPOSALS: Replace the second sentence with the following: Submission of the entire specification book is not required.

I-1.03 ADDENDA – Section I-2.03 is replaced with the following: No interpretation of the meaning of the Plans, Specifications, or other Contract Documents will be made to any Bidder orally.

Every request for such interpretation must be in writing, addressed to the City of Tampa, Contract Administration Department, 306 E. Jackson St., 4th Floor, Tampa, Florida 33602 and then emailed to ContractAdministration@tampagov.net. To be given consideration, such request must be received at least seven (7) days prior to the date fixed for the opening of the Proposals. Any and all such interpretations and any supplemental instructions will be in the form of written addenda which, if issued, will be posted on DemandStar.Com and on the Department's web page. Failure of any Bidder to receive any such addenda shall not relieve said Bidder from any obligation under his Proposal as submitted. All addenda so issued shall become part of the Contract Documents.

I-1.04 INSTRUCTIONS TO BIDDERS

SECTION 2 – GENERAL INSTRUCTIONS. Section I-2.07 SIGNATURE AND QUALIFICATIONS OF BIDDERS is replaced with the following:

> Proposals must be signed in ink by the Bidder with signature in full. When firm is a Bidder, the Proposal shall be signed in the name of the firm by one or more partners. When a corporation is a bidder the officer signing shall set out the corporate name in full beneath which he shall sign his name and give the title of his office.
>
> If the bidder referred to in Section I-2.07 is a corporation, it must submit; upon request, a copy of its filed Articles of Incorporation. In addition, if the bidder was incorporated in another state, it must establish that it is authorized to do business in the State of Florida. If the bidder is using a fictitious name, it must submit upon request, proof of registration of such name with the Clerk of the Circuit Court of the County where its principal place of business is. Failure to submit what is required is grounds to reject the bid of that bidder.

SECTION 2 – GENERAL INSTRUCTIONS. Section I-2.14 NONDISCRIMINATION IN EMPLOYMENT is changed to add the following to the end of the existing text:

The following provisions are hereby incorporated into any contract executed by or on behalf of the City. Contractor shall comply with the following Statement of Assurance: During the performance of the Contract, the Contractor assures the City, that the Contractor is in compliance with Title VII of the 1964 Civil Rights Act, as amended, the Florida Civil Rights Act of 1992, and the City of Tampa Code of Ordinances, Chapter 12, in that Firm/Contractor does not on the grounds of race, color, national origin, religion, sex, sexual orientation, gender identity or expression, age, disability, familial status, or marital status, discriminate in any form or manner against said Firm's/Contractor's employees or applicants for employment. Contractor understands and agrees that the Contract is conditioned upon the veracity of this Statement of Assurance, and that violation of this condition shall be considered a material breach of the Award/Contract. Furthermore, Contractor herein assures the City that said Contractor will comply with Title VI of the Civil Rights Act of 1964 when federal grant(s) is/are

involved. This Statement of Assurance shall be interpreted to include Vietnam-Era Veterans and Disabled Veterans within its protective range of applicability. Firm/Contractor further acknowledges and agrees to provide the City with all information and documentation that may be requested by the City from time to time regarding the solicitation, selection, treatment and payment of subcontractors, suppliers and vendors in connection with this Award/Contract. Firm/Contractor further acknowledges that it must comply with City of Tampa Code of Ordinances, Chapter 26.5, as enacted by Ordinance No. 2008-89.

I-1.05 TIME FOR COMPLETION:

The work shall be arranged to be completed in accordance with a progress schedule approved by the Construction Engineer.

The time for completion of this project, referred in Article 4.01 of the Agreement, shall be 150 consecutive calendar days. The period for performance shall start from the date indicated in the Notice To Proceed.

I-1.06 LIQUIDATED DAMAGES:

The amount of liquidated damages, referred to in Article 4.06 of the Agreement, for completion of this project shall be $500 per calendar day.

I-1.07 BASIS OF AWARD OF CONTRACT:

The basis of award referred to in Item I-2.11 of Instructions to Bidders shall be the greatest amount of work, which can be accomplished within the funds available as budgeted. The award may be made on the basis of the total bid, base bid, alternates(s) if any, unit bids if any, or any combination thereof deemed to be in the best interest of the City.

Unless all bids are rejected, the award will be made within 90 days after opening proposals.

I-1.08 GROUND BREAKING CEREMONY:

Arrangement may be made by the City in coordination with the Contractor, for construction to commence with a Ground Breaking Ceremony. Details will be discussed at the pre-construction conference.

I-1.09 INSURANCE:

The insurance required for this project shall be as indicated on the attached and incorporated Special Instructions pages beginning with page INS-1 entitled CITY OF TAMPA INSURANCE REQUIREMENTS, which among other things requires the Contractor to provide a Certificate of Insurance to the City prior to commencing work. The City may from time to time use a third party vendor to manage its insurance certificates and related documentation which vendor may periodically initiate contact, requests for information, etc. on the City's behalf.

I-1.10 EQUAL BUSINESS OPPORTUNITY PROGRAM REQUIREMENTS

BIDDERS MUST SUBMIT COMPLETED FORMS MBD-10 AND MBD-20 WITH BIDS. BIDS SUBMITTED WITHOUT THE COMPLETED FORMS (INCLUDING SIGNATURES) WILL BE DEEMED NON-RESPONSIVE.

In accordance with the City of Tampa's Equal Business Opportunity Program, no goal has been established for subcontracting with Women-Minority Business Enterprises (WMBEs) and Small Local Business Enterprises (SLBEs) certified by the City. The goal is based upon the availability of firms.

INSTRUCTIONS TO BIDDERS
SECTION 1 - SPECIAL INSTRUCTIONS

SHELTERED MARKET for SLBEs or Underutilized WMBEs: This bid/proposal is a Sheltered Market solicitation for current City of Tampa certified Small Local Business Enterprises (SLBEs) and Underutilized Women/Minority Business Enterprises (WMBEs) identified on MBD Form-70 for "Construction". Only submissions from current certified SLBEs and Underutilized WMBEs on MBD Form-70 will be reviewed. To determine if your company is eligible as a City of Tampa Small Local Business Enterprise and/or Women/Minority Business Enterprise, please contact the Minority and Small Business Development Office at (813) 274-5512.

DIVERSITY MANAGEMENT INITIATIVE, DMI, DATA REPORTING FORMS REQUIRED - Bidders must submit, with its bid, "DMI-Solicited" forms listing all subcontractors solicited and "DMI-Utilized" forms listing all subcontractors to be utilized. Supplemental forms, documentation, or information may be submitted at bid time or as requested by the City.

After an award, "DMI-Payments" forms are to be submitted with payment requests to report payments to subcontractors.

Bidders may visit the Minority Business Development web page at TampaGov.net for other information about the program, FAQ's, and the latest directory of certified firms.

I-1.11 BID SECURITY:

Surety companies shall have a rating of not less than B+ Class VI as evaluated in the most recently circulated Best KeyRating Guide Property/Casualty.

I-1.12 PUBLIC CONSTRUCTION BOND:

The Bidder who is awarded the Contract will be required to furnish a Public Construction Bond upon the form provided herein, equal to 100 percent of the Contract price, such Bond to be issued and executed by (a) surety company(ies) acceptable to the City and licensed to underwrite contracts in the State of Florida. After execution of the Agreement and before commencing work, the Contractor must provide the City a certified copy of the officially recorded Bond.

I-1.13 AGREEMENT

SECTION 2 – POWERS OF THE CITY'S REPRESENTATIVES, new Article 2.05:

Add the following:

Article 2.05 CITY'S TERMINATION FOR CONVENIENCE:

The City may, at any time, terminate the Contract in whole or in part for the City's convenience and without cause. Termination by the City under this Article shall be by a notice of termination delivered to the Contractor, specify the extent of termination and the effective date.

Upon receipt of a notice of termination, the Contractor shall immediately, in accordance with instructions from the City, proceed with performance of the following duties regardless of delay in determining or adjusting amounts due under this Paragraph:

(a) cease operations as specified in the notice;
(b) place no further orders and enter into no further subcontracts for materials, labor, services or facilities except as necessary to complete continued portions of the Contract;
(c) terminate all subcontracts and orders to the extent they relate to the Work terminated;
(d) proceed to complete the performance of Work not terminated; and
(e) take actions that may be necessary, or that the City may direct, for the protection and preservation of the terminated Work.

The amount to be paid to the Contractor by the City because of the termination shall consist of:

(a) for costs related to work performed on the terminated portion of the Work prior to the effective date including termination costs relative to subcontracts that are properly chargeable to the terminated portion of the Work;

(b) the reasonable costs of settlement of the Work terminated, including accounting, legal, clerical and other expenses reasonable necessary for the preparation of termination settlement proposals and supporting data; additional costs of termination and settlement of subcontracts excluding amounts of such settlements; and storage, transportation, and other costs incurred which are reasonably necessary for the preservation, protection or disposition of the terminated Work; and

(c) a fair and reasonable profit on the completed Work unless the Contractor would have sustained a loss on the entire Contract had it been completed.

Allowance shall be made for payments previously made to the Contractor for the terminated portion of the Work, and claims which the City has against the Contractor under the Contract, and for the value of materials supplies, equipment or other items that are part of the costs of the Work to be disposed of by the Contractor.

SECTION 5 – SUBCONTRACTS AND ASSIGNMENTS, Article 5.01, Page A-7, last paragraph:
Change "…twenty-five (25) percent…" to "…fifty-one (51) percent…"

SECTION 8 – CONTRACTOR'S EMPLOYEES, Article 8.03, Page A-9, delete Article 8.03 in its entirety and replace with the following new article:

ARTICLE 8.03 EMPLOYMENT OPPORTUNITIES
The Contractor shall, in the performance of the work required to be done under this Contract, employ all workers without discrimination and must not maintain, provide or permit facilities that are segregated.

SECTION 10 – PAYMENTS, Article 10.05, Page A-10, 1st Paragraph, 1st Sentence:
Change "…fair value of the work done, and may apply for…" to "…fair value of the work done, and shall apply for…"

SECTION 11 – MISCELLANEOUS PROVISIONS, Article 11.02, Page A-12, 1st Paragraph, 2nd Sentence:
Delete the 2nd Sentence in its entirety and replace it with the following new 2nd Sentence:

Without limiting application of Article 11.07, below, whenever the Contractor is required or desires to use any design, device, material, or process covered by letters of patent or copyright, the Contractor shall indemnify, defend, and hold harmless the City Indemnified Parties (as defined below) from any and all Claims (as defined below) for infringement by reason of the use of any such patented design, device, tool, material, equipment, or process, to be performed under the Contract and damages which may be incurred by reason of such infringement at any time during the prosecution or after completion of the work.

SECTION 11 – MISCELLANEOUS PROVISIONS, Article 11.03, Page A-12:
Delete Article 11.03 in its entirety and replace with the following new article:

ARTICLE 11.03 INTENTIONALLY OMITTED.

SECTION 11 – MISCELLANEOUS PROVISIONS, Article 11.07, Page A-12:
Delete Article 11.07 in its entirety and replace with the following new article:

ARTICLE 11.07 INDEMNIFICATION PROVISIONS
Whenever there appears in this Agreement, or in the other Contact Documents made a part hereof, an indemnification provision within the purview of Chapter 725.06, Laws of Florida, the monetary limitation on the extent of the indemnification under each such provision shall be One Million Dollars or a sum equal to the total Contract price, whichever shall be the greater.

Contractor releases and agrees to defend, indemnify and hold harmless the City, its officers, elected and appointed officials, employees, and/or agents (collectively, "City Indemnified Parties") from and against any and all losses,

liabilities, damages, penalties, settlements, judgments, charges, or costs (including without limitation attorneys' fees, professional fees, or other expenses) of every kind and character arising out of any and all claims, liens, is entitled to indemnification hereunder. This obligation shall in no way be limited in any nature whatsoever by any limitation on the amount or type of Contractor's insurance coverage.

The parties agree that to the extent the written terms of this indemnification are deemed by a court of competent jurisdiction to be in conflict with any provisions of Florida law, in particular Sections 725.06 and 725.08, Florida Statutes, the written terms of this indemnification shall be deemed by any court of competent jurisdiction to be modified in such a manner as to be in fully and complete compliance with all such laws and to contain such limiting conditions or limitations of liability, or to not contain any unenforceable or prohibited term or terms, such that this indemnification shall be enforceable in accordance with and to the maximum extent permitted by Florida law.

The obligation of Contractor under this Article is absolute and unconditional; it is not conditioned in any way on any attempt by a City Indemnified Party to collect from an insurer any amount under a liability insurance policy, and is not subject to any set-off, defense, deduction, or counterclaim that the Contactor might have against the City Indemnified Party. The duty to defend hereunder is independent and separate from the duty to indemnify, and the duty to defend exists regardless of any ultimate liability of Contractor, the City, and any City Indemnified Party. The duty to defend arises immediately upon presentation of a Claim by any party and written notice of such Claim being provided to Contractor. Contractor's defense and indemnity obligations hereunder will survive the expiration or earlier termination of this Contract.

Contractor agrees and recognizes that the City Indemnified Parties shall not be held liable or responsible for any Claims which may result from any actions or omissions of Contractor in which the City Indemnified Parties participated either through providing data or advice and/or review or concurrence of Contractor's actions. In reviewing, approving or rejecting any submissions by Contractor or other acts of Contractor, the City in no way assumes or shares any responsibility or liability of Contractor or any tier of subcontractor/subconsultant/supplier, under this Contract.

In the event the law is construed to require a specific consideration for such indemnification, the parties agree that the sum of Ten Dollars and 00/100 ($10.00), receipt of which is hereby acknowledged, is the specific consideration for such indemnification and the providing of such indemnification is deemed to be part of the specifications with respect to the services provided by Contractor.

SECTION 11 – MISCELLANEOUS PROVISIONS, Article 11.12, Page A-13:
Change Article 11.12 to add the following new language after existing text:

The City of Tampa is a public agency subject to Chapter 119, Florida Statutes. In accordance with Florida Statutes, 119.0701, Contractor agrees to comply with Florida's Public Records Law, including the following:

1. Contractor shall keep and maintain public records required by the City to perform the services under this Agreement;

2. Upon request by the City, provide the City with copies of the requested records, having redacted records in total on in part that are exempt from disclosure by law or allow the records to be inspected or copied within a reasonable time (with provision of a copy of such records to the City) on the same terms and conditions that the City would provide the records and at a cost that does not exceed that provided in Chapter 119, Florida Statutes, or as otherwise provided by law;

3. Ensure that records, in part or in total, that are exempt or that are confidential and exempt from disclosure requirements are not disclosed except as authorized by law for the duration of the Agreement term and following completion (or earlier termination) of the Agreement if Contractor does not transfer the records to the City;

4. Upon completion (or earlier termination) of the Agreement, Contractor shall within 30 days after such event either transfer to the City, at no cost, all public records in possession of the Contractor or keep and maintain the public records in compliance with Chapter 119, Florida Statutes. If Contractor transfers all public records to the City upon completion (or earlier termination) of the Agreement, Contractor shall destroy any duplicate records that are exempt or confidential and exempt from public records disclosure requirements. If Contractor keeps and maintains public records upon completion (or earlier termination) of the Agreement, Contractor shall meet all applicable requirements for retaining public records. All records stored electronically must be provided to the City in a format that is compatible with the information technology systems of the agency.

The failure of Contractor to comply with Chapter 119, Florida Statutes, and/or the provisions set forth in this Article shall be grounds for immediate unilateral termination of the Agreement by the City; the City shall also have the option to withhold compensation due Contractor until records are received as provided herein.

IF CONTRACTOR HAS QUESTIONS REGARDING THE APPLICATION OF CHAPTER 119, FLORIDA STATUTES, TO CONTRACTOR'S DUTY TO PROVIDE PUBLIC RECORDS RELATING TO THIS AGREEMENT, CONTACT THE CUSTODIAN OF PUBLIC RECORDS AT 813-274-8598, JIM.GREINER@TAMPAGOV.NET, AND CONTRACT ADMINISTRATION DEPARTMENT, TAMPA MUNICIPAL OFFICE BUILDING, 4TH FLOOR, 306 E. JACKSON ST. TAMPA, FLORIDA 33602.

I-1.14 Contractors must utilize the U.S. Department of Homeland Security's E-Verify Systems to verify the employment eligibility of all persons employed during the term of the Contract to perform employment duties within the State of Florida and all persons, including subcontractors, assigned by Contractor to perform work pursuant to the contract.

I-1.15 GENERAL PROVISIONS; G-2.02 Copies Furnished to Contractor: Replace the first paragraph with the following:

The Contractor shall acquire for its use copies of the plans and specifications as needed, which may be downloaded from the City's web site, at http://www.tampagov.net/contract-administration/programs/construction-project-bidding.

Bidder as part of the solicitation process (and as Contractor if Bidder is successful) may hold, come into possession of, and/or generate certain building plans, blueprints, schematic drawings, including draft, preliminary, and final formats, which depict the internal layout and structural elements of a building, facility, or other structure owned or operated by the City or an agency (singularly or collectively "Exempt Plans"), which pursuant to Section 119.071(3), Florida Statutes, are exempt from Section 119.07(1), Florida Statutes and Section 24(a), Art. I of the Florida State Constitution. Contractor certifies it has read and is familiar the exemptions and obligations of Section 119.071(3), Florida Statutes; further that Contractor is and shall remain in compliance with same, including without limitation maintaining the exempt status of such Exempt Plans, for so long as any Exempt Plans are held by or otherwise in its possession.

I-1.16 PAYMENT DISPUTE RESOLUTION

Any dispute pertaining to pay requests must be presented to the City pursuant to Executive Order 2003-1.

I-1.17 SCRUTINIZED COMPANIES CERTIFICATION

Section 287.135, Florida Statutes, prohibits agencies or local governmental entities from contracting for goods or services of any amount with companies that are on the Scrutinized Companies that Boycott Israel List or are engaged in a boycott of Israel, and of $1 million or more with companies that are on either the Scrutinized Companies with Activities in Sudan List or the Scrutinized Companies with Activities in the Iran Petroleum Energy

Sector List, or are engaged in business operations in Cuba or Syria. Specifically, Section 287.135(2), Florida Statutes, states: "A company is ineligible to, and may not, bid on, submit a proposal for, or enter into or renew a contract with an agency or local governmental entity for goods or services of: (a) Any amount if, at the time of bidding on, submitting a proposal for, or entering into or renewing such contract, the company is on the Scrutinized Companies that Boycott Israel List, created pursuant to s. 215.4725, or is engaged in a boycott of Israel; or (b) One million dollars or more if, at the time of bidding on, submitting a proposal for, or entering into or renewing such contract, the company: 1. Is on the Scrutinized Companies with Activities in Sudan List or the Scrutinized Companies with Activities in the Iran Petroleum Energy Sector List, created pursuant to s. 215.473; or 2. Is engaged in business operations in Cuba or Syria."

Upon submitting its bid or proposal, a bidder/proposer: (i) certifies the company is not in violation of Section 287.135, Florida Statutes, and shall not be in violation at the time the company enters into or renews any resulting contract; and (ii) agrees any such resulting contract shall be deemed to contain a provision that allows the City, at its option, to terminate such contract for cause if the company is found to have submitted a false certification, been placed on one or any of the foregoing Lists, been engaged in a boycott of Israel, or been engaged in business operations in Cuba or Syria.

I-1.18 FLORIDA'S PUBLIC RECORDS LAW; DATA COLLECTION

Pursuant to Section 119.071(5)(a)2a, Florida Statutes, social security numbers shall only be collected from Bidders and/or Contractor by the City should such number be needed for identification, verification, and/or tax reporting purposes. To the extent Bidder and/or Contractor collects an individual's social security number in the course of acting on behalf of the City pursuant to the terms and conditions of its Proposal or, if awarded, the Agreement, Bidder and/or Contractor shall follow the requirements of Florida's Public Records Law.

I-1.19 Florida's Public Records Law; DATA COLLECTION

Pursuant to Section 119.071(5)(a)2a, Florida Statutes, social security numbers shall only be collected from Bidders and/or Contractor by the City should such number be needed for identification, verification, and/or tax reporting purposes. To the extent Bidder and/or Contractor collects an individual's social security number in the course of acting on behalf of the City pursuant to the terms and conditions of its Proposal or, if awarded, the Agreement, Bidder and/or Contractor shall follow the requirements of Florida's Public Records Law.

I-1.20 CONFLICT OF INTEREST

The Contractor shall comply with the following provision, and shall include, and require its subcontractors to include in each subcontract the following provision: No member, officer or employee of the Recipient or of the locality during his tenure or for 2 years thereafter shall have any interest, direct or indirect, in this contract or the proceeds thereof.

I-1.21 INDEMNIFICATION

To the extent provided by law, the Contractor shall indemnify, defend, and hold harmless the City and the State of Florida, Department of Transportation, including the Department's officers, agents, and employees, against any actions, claims, or damages arising out of, relating to, or resulting from negligent or wrongful act(s) of the Contractor, or any of its officers, agents, or
employees, acting within the scope of their office or employment, in connection with the rights granted to or exercised by the Contractor hereunder, to the extent and within the limitations of Section 768.28, Florida Statutes.

The foregoing indemnification shall not constitute a waiver of sovereign immunity beyond the limits set forth in Florida Statutes, Section 768.28. Nor shall the same be construed to constitute agreement by the Contractor to indemnify the City for the negligent acts or omissions of the City, its officers, agents, or employees, or third parties. Nor shall the same be

construed to constitute agreement by the Contractor to indemnify the Department for the negligent acts or omissions of the Department, its officers, agents, or employees, or third parties. This indemnification shall survive the termination of this Agreement.

I-1.22 s.20.055(5) Florida Statutes

It is the duty of every state officer, employee, agency, special district, board, commission, contractor, and subcontractor to cooperate with the inspector general in any investigation, audit, inspection, review, or hearing pursuant to this section.

SECTION 2
GENERAL INSTRUCTIONS

I-2.01 BIDDER'S RESPONSIBILITY
Before submitting Proposals, Bidders shall carefully examine the entire site of the proposed work and adjacent premises and the various means of approach and access to the site, and make all necessary investigations to inform themselves thoroughly as to the facilities necessary for delivering, placing and operating the necessary construction equipment, and for delivering and handling materials at the site, and inform themselves thoroughly as to all difficulties involved in the completion of all the work in accordance with the Contract Documents.

Bidders must examine the Plans, Specifications, and other Contract Documents and shall exercise their own judgment as to the nature and amount of the whole of the work to be done, and for the bid prices must assume all risk of variance, by whomsoever made, in any computation or statement of amounts or quantities necessary to complete the work in strict compliance with the Contract Documents.

Elevations of the ground are shown on the Plans and are believed to be reasonably correct, but are not guaranteed to be absolutely so and are presented only as an approximation. Bidders shall satisfy themselves as to the correctness of all elevations.

The City may have acquired, for its own use, certain information relating to the character of materials, earth formations, probable profiles of the ground, conditions below ground, and water surfaces to be encountered at the site of the proposed work. This information, if it exists, is on file at the offices of the Department of Public Works and Bidders will be permitted to see and examine this information for whatever value they consider it worth. However, this information is not guaranteed, and Bidders should satisfy themselves by making borings or test pits, or by such other methods as they may prefer, as to the character, location, and amounts of water, peat, clay, sand, quicksand, gravel, boulders, conglomerate, rock, gas or other material to be encountered or work to be performed.

Various underground and overhead structures and utilities are shown on the plans. The location and dimensions of such structures and utilities, where given, are believed to be reasonably correct, but do not purport to be absolutely so. These structures and utilities are plotted on the Plans for the information of the Bidders, but information so given is not to be construed as a representation or assurance that such structures will be found or encountered as plotted, or that such information is complete or accurate.

I-2.02 FORM, PREPARATION AND PRESENTATION OF PROPOSALS
Each Proposal shall be submitted upon the Proposal Form and in accordance with the instructions included herein. The Proposal Form must not be detached herefrom. All blank spaces for bid prices must be filled in, in both words and figures, with the unit or lump sum prices, or both, for which the Proposal is made. The computed total price for each unit price Contract Item shall be determined by multiplying the estimated quantity of the item, as set forth in the Proposal Form, by the corresponding unit price bid for such item. The resulting product shall be entered in the appropriate blank space under the column headed "Computed Total Price for Item". The lump sum price bid for each lump sum price Contract Item shall also be entered in the column headed "Computed Total Price for Item". If a Proposal contains any omissions, erasures, alterations, additions, or items not called for in the itemized Proposal, or contains irregularities of any kind, such may constitute sufficient cause for rejection of the Proposal. In case of any discrepancy in the unit price or amount bid for any item in the Proposal, the price as expressed in written words will govern. In no case is the Agreement Form to be filled out or signed by the Bidder.

In the case of certain jobs bid Lump Sum a "Schedule of Unit Prices" must be filled out as an attachment to the Lump Sum proposal. These prices may be used as a guide for the negotiation of change orders, at the City's option.

The proposal must be signed and certified and be presented on the prescribed form in a sealed envelope on/or before the time and at the place stated in the Notice of Bidders, endorsed with the name of the person, firm or corporation presenting it, the date of presentation, and the title of the work for which the Proposal is made.

Unless the apparent low bidder is now engaged in or has recently completed contract work for the City of Tampa, he, if requested, shall furnish to the City, after the opening of bids and prior to award, a summary statement of record of construction experience over the past three (3) years with proper supporting evidence, and, if required by the City, shall also furnish a list of equipment and other facilities pertinent to and available for the proper execution of the proposed work, and a statement of financial resources to the extent necessary to establish ability to carry on the proposed work. The City may make further investigations as considered necessary with respect to responsibility of the Bidder to whom it appears may be awarded the Contract.

If forwarded by mail, the sealed envelope containing the Proposal, endorsed as directed above, must be enclosed in another envelope addressed as specified in the Notice to Bidders and sent by registered mail.

I-2.03 ADDENDA AND INTERPRETATIONS
No interpretation of the meaning of the Plans, Specifications, or other Contract Documents will be made to any Bidder orally.

Every request for such interpretation must be in writing, addressed to the Contract Administration Department, Tampa Municipal Office Building, 4th Floor North, City Hall Plaza, Tampa, Florida 33602. To be given consideration, such request must be received at least seven (7) days prior to the date fixed for the opening of the Proposals. Any and all such interpretations and any supplemental instructions will be in the form of written addenda which, if issued, will be sent by certified mail, with return receipt requested, to all prospective bidders at the respective addresses furnished, for such purposes, not later than three (3) working days prior to the date fixed for the opening of the Proposals, and if requested, a copy will be delivered to the prospective bidder's representative. Failure of any Bidder to receive any such addenda shall not relieve said Bidder from any obligation under his Proposal as submitted. All addenda so issued shall become part of the Contract Documents.

I-2.04 BID SECURITY
Each Proposal must be accompanied by a certified or cashier's check issued by a solvent bank or trust company and payable at sight to the City of Tampa, in compliance with Section 255.051 Florida Statutes, or a Bid Bond upon the form provided herein, in an amount of not less than five percent of the sum of the computed total amount of the Bidder's Proposal as a guarantee that if the Proposal is accepted, the Bidder will execute and fill in the proposed Contract and Public Construction Bond within twenty (20) days after notice of award of the Contract. Certified checks shall have all necessary documentary revenue stamps attached if required by law. Surety on Bid Bonds shall be a duly authorized surety company authorized to do business in the State of Florida, and all such Bonds shall be issued or countersigned by a local resident producing agent, and satisfactory evidence of the authority of the person or persons executing such Bond to Execute the same shall be submitted with the Bond. Bid Bonds shall be issued by a surety company acceptable to the City.

Within ten (10) days after the opening of Proposals, the bid security of all but the three lowest Bidders will be returned. The bid security of the remaining two Bidders whose Proposals are not accepted will be

returned within ten (10) days after the execution of the Contract, or, if no such Contract has been executed, within ninety (90) days after the date of opening Proposals. The bid security of the Bidder whose Proposal is accepted will be returned only after he has duly executed the Contract and furnished the required Public Construction Bond and insurance.

Should it be necessary for the City to retain the bid security and said bid security is in the form of checks, the checks of these Bidders will be returned if replaced by Bid Bonds in an amount equal to the amount of the checks of such Bidders in such form and issued by a surety company acceptable to the City.

A Bidder may withdraw his Proposal before the time fixed for the opening of Proposals, without prejudice to himself, by communicating his purpose, in writing, to the Mayor and City Council, and when his communication is received, the Proposal will be handed to him or his authorized agent unopened. No Bidder may withdraw his Proposal within ninety (90) days after the day of opening Proposals.

The Bidder whose Proposal is accepted shall enter into a written contract, upon the Agreement form included herein, for the performance of the work and furnish the required Public Construction Bond within twenty (20) days after written notice by the City of Award of Contract has been served on such Bidder personally or after receipt of the written notice by registered mail to such Bidder at the address given in his Proposal.

If the Bidder to whom a Contract is awarded refuses or neglects to execute it or fails to furnish the required Public Construction Bond within twenty (20) days after receipt by him of the Notice of Award of Contract, the amount of his bid security shall be forfeited and shall be retained by the City as liquidated damages, and not as a penalty, it being now agreed that said sum is a fair estimate of the amount of damages that the City will sustain in case said Bidder fails to enter into a Contract and furnish the required Public Construction Bond. If a Bid Bond was furnished, the full amount of the Bond shall become due and payable as liquidated damages caused by such failure. The full amount of the bid security shall be forfeited as liquidated damages without consideration of the fact that an award may be less than the full amount of the Bidder's Proposal, excepting that the award shall be within the conditions of said Proposal relating to the basis of consideration for an award. No plea of mistake in the bid or misunderstanding of the conditions of forfeiture shall be available to the Bidder for the recovery of his deposit or as a defense to any action based upon the neglect or refusal to execute a contract.

I-2.05 LAWS AND REGULATIONS
The Bidder who is awarded the Contract must comply with all laws of the State of Florida, and all applicable Ordinances of the City of Tampa respecting labor and compensation and with all other statutes, ordinances, rules and regulations applicable and having the force of law.

I-2.06 PUBLIC CONSTRUCTION BOND
The Bidder who is awarded the Contract will be required to furnish a Public Construction Bond upon the form provided herein, equal to 100 percent of the Contract price, such Bond to be executed by a surety company acceptable to the City of Tampa and licensed to underwrite contracts in the State of Florida. Surety companies shall have a rating of not less than: B+ Class VI as evaluated in the most recently circulated BEST'S KEY RATING GUIDE PROPERTY-LIABILITY.

I-2.07 SIGNATURE AND QUALIFICATIONS OF BIDDERS
Proposals must be signed in ink by the Bidder with signature in full. When a firm is a Bidder, the Proposal shall be signed in the name of the firm by one or more of the partners. When a corporation is a Bidder the officer signing shall set out the corporate name in full beneath which he shall sign his name and give the title of his office. The Proposal shall also bear the seal of the corporation attested by its secretary. Anyone signing the Proposal as agent must file with it legal evidence of his authority to do so.

Bidders who are nonresident corporations shall furnish to the City a duly certified copy of their permit to transact business in the State of Florida, signed by the Secretary of State, within ten days of the notice to do so. Such notice will be given to Bidders who are nonresident corporations, to whom it appears an award will be made, and the copy of the permit must be filed with the City before the award will be made. Failure to promptly submit this evidence of qualification to do business in the State of Florida may be basis for rejection of the Proposal.

I-2.08 REJECTION OF PROPOSALS
The City reserves the right to reject any Proposal if investigation of the Bidder fails to satisfy the City that such Bidder is properly qualified to carry out the obligations and to complete the work contemplated therein. Any or all Proposals will be rejected if there is reason to believe that collusion exists among Bidders. Proposals will be considered irregular and may be rejected if they show serious omissions, alterations in form, additions not called for, conditions or unauthorized alternates, or irregularities of any kind. The City reserves the right to reject any or all Proposals and to waive such technical errors as may be deemed best for the interests of the City.

I-2.09 QUANTITIES ESTIMATED ONLY
The estimate of quantities of the various items of work and materials, if set forth in the Proposal Form, is approximate only and is given solely to be used as a uniform basis for the comparison of Proposals. The quantities actually required to complete the Contract work may be less or more than so estimated, and if awarded a Contract for the work specified, the Contractor agrees that he will not make any claim for damages or for loss of profits because of a difference between the quantities of the various classes of work assumed for comparison of Proposals and quantities of work actually performed. The City further reserves the right to vary the quantities in any amount.

I-2.10 COMPARISON OF PROPOSALS
Except jobs bid on a "One Lump Sum" basis, proposals will be compared on the basis of a total computed price arrived at by taking the sum of the estimated quantity of each time and the corresponding unit price of each item, and including any lump sum prices on individual items.

The computed total prices for individual Contract Items and the total computed price for the entire Contract, as entered by the Bidder in the Proposal Form, are for convenience only and are subject to correction in the tabulation and computation of the Proposals.

I-2.11 BASIS OF AWARD
The Contract will be awarded, if at all, to the lowest responsible Bidder or Bidders, as determined by the City and by the terms and conditions of the Contract Documents. Unless all bids are rejected, the award will be made within ninety (90) days after the opening of Proposals. The successful Bidder will be required to possess, or obtain, a valid City Occupational License.

I-2.12 INSURANCE REQUIRED
The successful Bidder and his subcontractors will be required to procure and pay for insurance covering the work in accordance with the provisions of Article 6.02 of the Agreement as indicated on special instructions pages beginning with INS-1.

I-2.13 NO ASSIGNMENT OF BID
No Bidder shall assign his bid or any rights thereunder.

I-2.14 NONDISCRIMINATION IN EMPLOYMENT
Contracts for work under this Proposal will obligate the contractors and subcontractors not to discriminate in employment practices.

Bidders must, if requested, submit with their initial bid a signed statement as to whether they have previously performed work subject to the President's Executive Order Nos. 11246 and 11375.
Bidders must, if requested, submit a compliance report concerning their employment practices and policies in order to maintain their eligibility to receive the award of the Contract.

Successful Bidders must, if requested, submit a list of all subcontractors who will perform work on the project and written,

signed statement from authorized agents of the labor pools with which they will or may deal for employees on the work together with supporting information to the effect that said labor pools practices and policies are in conformity with Executive Order No. 11246 and that said labor pools will affirmatively cooperate in or offer no hindrance to the recruitment, employment and equal treatment of employees seeking employment and performing work under the Contract, or a certification as to what efforts have been made to secure such statements when such agents or labor pools have failed or refused to furnish them prior to the award of the Contract.

I-2.15 LABOR STANDARDS
The Bidder's attention is directed to the Contract Provisions of the Labor Standards for federally assisted projects which may be attached to and made a part of the Agreement.

I-2.16 NOTICE TO LABOR UNIONS
If applicable, the successful Bidder will be required to provide Labor Unions and other organizations of workers a completed copy of the form entitled "Notice to Labor Unions or Other Organizations of Workers", and such form may be made a part of the Agreement.

I-2.17 NOTICE TO PROSPECTIVE FEDERALLY-ASSISTED CONSTRUCTION CONTRACTORS
A Certification of Nonsegregated Facilities, as required by the May 9, 1967, Order (32 F.R. 7439, May 19, 1967) on Elimination of Segregated Facilities, by the Secretary of Labor, must be submitted to said Secretary prior to the award of a federally-assisted construction and Contract exceeding $10,000 which is not exempt from the provisions of the Equal Opportunity Clause. The form of certification may be bound herein following the form of Bid Bond.

Contractors receiving federally-assisted construction Contract awards exceeding $10,000 which are not exempt from the provisions of the Equal Opportunity Clause will be required to provide for the forwarding of the following notice to prospective subcontractor for supplies and construction contracts where the subcontracts exceed $10,000 and are not exempt from the provisions of the Equal Opportunity Clause:

NOTICE TO PROSPECTIVE SUBCONTRACTORS OF REQUIREMENT
FOR CERTIFICATIONS OF NONSEGREGATED FACILITIES

"A Certification of Nonsegregated Facilities, as required by the May 9, 1967, Order (32 F.R. 7439, May 19, 1967) on Elimination of Segregated Facilities, by the Secretary of Labor, must be submitted prior to the award of a subcontract exceeding $10,000 which is not exempt from the provisions of the Equal Opportunity Clause."

"Contractors receiving subcontract awards exceeding $10,000 which are not exempt from the provisions of the Equal Opportunity Clause will be required to provide from the forwarding of this notice to prospective subcontractors for supplies and construction contracts where the subcontracts exceed $10,000 and are not exempt from the provisions of the Equal Opportunity Clause."

The United States requires a pre-award conference if a proposed construction contract exceeds one million dollars to determine if the the prospective contractor is in compliance with the Equal Employment Opportunity requirements of Executive Order 11246 of September 24, 1965. In such instances, a meeting may be scheduled at which the prospective contractor must specify what affirmative action he has taken or proposed to take to assure equal employment opportunity which must be approved by the United States before award of the contract will be authorized.

Bidders must be prepared to submit an Equal Employment Opportunity (EEO) plan at a pre-award conference. The plan must include bidding opportunities offered by the Bidder to minority subcontractors.

On October 13, 1971, President Nixon issued Executive Order 11246 emphasizing the government's commitment to the promotion of minority business enterprise. Accordingly, the United States is firmly committed to the utilization of available resources to support this important program. U.S. agencies are most interested in realizing minority participation on the subject. Achieving equal employment opportunity compliance is required through Executive Order 11246. WE cannot emphasize too strongly that minority subcontractors be extended subcontractors bidding opportunities as but one step in your affirmative action policy.

Due to the importance of this contract, U.S. Agencies may conduct an EEO Conference prior to the award of the Contract. It is suggested that the responsive Bidder confirm the minority subcontractors he contacted for bids or quotations in his EEO plan submitted at the conference.

I-2.18 EEO AFFIRMATIVE ACTION REQUIREMENTS
By the submission of a Proposal, each Bidder acknowledges that he understands and will agree to be bound by the equal opportunity requirements of Federal regulations which shall be applicable throughout the performance of work under any contract awarded pursuant to solicitation. Each Bidder agrees that if awarded a contract, he will similarly bind contractually each subcontractor. In policies, each Bidder further understands and agrees that if awarded a contract, he must engage in Affirmative Action directed to promoting and ensuring equal employment opportunity in the work force used under the contract (and he must require contractually the same effort of all subcontractors whose subcontracts exceed $100,000). The Bidder understands and agrees that "Affirmative Action" as used herein shall constitute a good faith effort to achieve and maintain minority employment in each trade in the on-site work force used on the project. * * * * * * * END of SECTION * * * * * * *

CITY OF TAMPA INSURANCE REQUIREMENTS

Prior to commencing any work or services or taking occupancy under that certain written agreement or award (for purposes of this document, Agreement) between the City of Tampa, Florida (City) and Firm/Awardee/Contractor/Consultant/Lessee/non-City party, etc. (for purposes of this document, Firm) to which this document is attached and incorporated as an Exhibit or otherwise, and continuing during the term of said Agreement (or longer if the Agreement and/or this document so requires), Firm shall provide, pay for, and maintain insurance against claims for injuries to persons (including death) or damages to property which may arise from or in connection with the performance of the Agreement (including without limitation occupancy and/or use of certain property/premises) by Firm, its agents, representatives, employees, suppliers, subtenants, or subcontractors (which term includes sub-consultants, as applicable) of any tier subject to the terms and conditions of this document. Firm's maintenance of insurance coverage as required herein is a material element of the Agreement and the failure to maintain or renew coverage or provide evidence of same (defined to include without limitation Firm's affirmative duty to provide from time to time upon City's request certificates of insurance, complete and certified copies of Firm's insurance policies, forms, and endorsements, information on the amount of claims payments or reserves chargeable to the aggregate amount of coverage(s) whether during the term of the Agreement or after as may be requested by the City in response to an issue or potential claim arising out of or related to the Agreement to which Firm's insurance obligations hereunder may apply or possibly help mitigate) may be treated as a material breach of the Agreement. Should at any time Firm not maintain the insurance coverages required, City at its sole option (but without any obligation or waiver of its rights) may (i) terminate the Agreement or (ii) purchase such coverages as City deems necessary to protect itself (charging Firm for same) and at City's option suspending Firm's performance until such coverage is in place. If Firm does not reimburse City for such costs within 10 days after demand, in addition to any other rights, City shall also have the right to offset such costs from amounts due Firm under any agreement with the City. All provisions intended to survive or to be performed subsequent to the expiration or termination of the Agreement shall survive, including without limitation Firm's obligation to maintain or renew coverage, provide evidence of coverage and certified copies of policies, etc. upon City's request and/or in response to a potential claim, litigation, etc.

The City reserves the right from time to time to modify or waive any or all of these insurance requirements (or to reject policies) based on the specific nature of goods/services to be provided, nature of the risk, prior experience, insurer, coverage, financial condition, failure to operate legally, or other special circumstances. If Firm maintains broader coverage and/or higher limits than the minimums shown herein, the City requires and shall be entitled to such broader coverage and/or higher limits maintained by Firm. Any available insurance proceeds in excess of the specified minimum limits of insurance and coverage shall be available to the City. No representation is made that the minimum insurance requirements are sufficient to cover Firm's interests, liabilities, or obligations. Required insurance shall not limit Firm's liability.

Firm acknowledges and agrees Firm and not the City is the party in the best position to determine applicability (e.g. "IF APPLICABLE"), confirm, and/or verify its insurance coverage. Acceptance by the City, or by any of its employees, representatives, agents, etc. of certificates or other documentation of insurance or policies pursuant to the terms of this document and the Agreement evidencing insurance coverages and limits does not constitute approval or agreement that the insurance requirements have been met or that coverages or policies are in compliance. Furthermore, receipt, acceptance, and/or approval of certificates or other documentation of insurance or policies or copies of policies by the City, or by any of its employees, representatives, agents, etc., which indicate less coverage than required does not constitute a waiver of Firm's obligation to fulfill these insurance requirements.

MINIMUM SCOPE AND LIMIT OF INSURANCE [1]

A. Commercial General Liability (CGL) Insurance on the most current Insurance Services Office (ISO) Form CG 00 01 or its equivalent on an "occurrence" basis (Modified Occurrence or Claims Made forms are not acceptable without prior written consent of the City). Coverage must be provided to cover liability contemplated by the Agreement including without limitation premises and operations, independent contractors, contractual liability, products and completed operations, property damage, bodily, personal and advertising injury, contractual liability, explosion, collapse, underground coverages, personal injury liability, death, employees-as-insureds. Products and completed operations liability coverage maintained for at least 3 years after completion of work. Limits shall not be less than $1M per occurrence and $2M general aggregate for Agreements valued at $2M or less; if valued over $2M, a general aggregate limit that equals or exceeds the Agreement's value. If a general aggregate limit applies; it shall apply separately to the project/location (ISO CG 2S 03 or 2S 04 or equivalent). **(ALWAYS APPLICABLE)**

B. Automobile Liability (AL) Insurance in accordance with Florida law, as to the ownership, maintenance, and use of all owned, non-owned, leased, or hired vehicles. AL insurance shall not be less than: (a) $500,000 combined single limit each occurrence bodily injury and property damage for Agreements valued at $100,000 or less or (b) $1M combined single limit each occurrence bodily injury and property damage for Agreements valued over $100,000. If transportation of hazardous material involved, the MCS-90 endorsement (or equivalent). **(ALWAYS APPLICABLE)**

C. Worker's Compensation (WC) & Employer's Liability Insurance for all employees engaged under the Agreement, Worker's Compensation as required by Florida law. Employer's Liability with minimum limits of (a) $500,000 bodily injury by accident and each accident, bodily injury by disease policy limit, and bodily injury by disease each employee for Agreements valued at $100,000 and under or (b) $1M bodily injury by accident and each accident, bodily injury by disease policy limit, and bodily injury by disease each for all other Agreements. **(ALWAYS APPLICABLE)**

D. Excess (Umbrella) Liability Insurance for Agreements valued at $2M or more, at least $4M per occurrence in excess of underlying limits and no more restrictive than underlying coverage for all work performed by Firm. May also compensate for a deficiency in CGL, AL, or WC. **(ALWAYS APPLICABLE)**

E. Builder's Risk Insurance for property loss exposure associated with construction/renovation/additions to buildings or structures, including materials or fixtures to be incorporated. Must be "All Risk" form with limits of no less than the project's completed value, have no coinsurance penalties, eliminate the "occupancy clause", cover Finn (together with its contractors, subcontractors of every tier, and suppliers), and name City as a Loss Payee. **(IF APPLICABLE)**

F. Installation Floater coverage for property (usually highly valued equipment or materials such as compressors, generators, etc.) during its installation. Coverage must be "All Risk" including installation and transit for no less than 100% of the installed replacement cost value. **(IF APPLICABLE)**

G. Architects & Engineers Liability/ Professional Liability (E&O)/ Contractors Professional Liability (CPrL)/ Medical Malpractice Insurance where Agreement involves Florida-regulated professional services (e.g. architect, engineer, design-builder, CM, accountant, appraiser, investment banker medical professional) at any tier, whether employed or independent, vicarious design liability exposure (e.g. construction means & methods, design supervision), value engineering, constructability assessments/reviews, BIM process, and/or performance specifications. Limits of at least $1M per occurrence and $2M aggregate; deletion of design/ build liability exclusions, as applicable, and maintained for at least 3 years after completion of work/services and City's acceptance of same. **(IF APPLICABLE)**

H. Railroad Protective Liability CRPL) Insurance for construction within 50ft of operated railroad track(s) or where affects any railroad bridge, trestle, tunnel, track(s) roadbed, or over/under pass. Subject to involved rail road's approval prior to commencement of work. **(IF APPLICABLE).**

I. Pollution and/or Asbestos Legal Liability Insurance where Agreement involves asbestos and/or environmental hazards/contamination risks (defined broadly, e.g. lead, mold, bacteria, fuel storage, underground work, cleanup (owned or non-owned sites), pollutant generation/transportation, marine/natural resource damage, contamination claim, restitution, business interruption, mold, fungus, lead-based paint, 3rd party claims/removal, etc.), with limits of at least $1M per occurrence and $2M aggregate, maintained for at least 3 years after Agreement completion. **(IF APPLICABLE)**

J. Cyber Liability Insurance where Agreement involves portals allowing access to obtain, use, or store data; managed dedicated servers; cloud hosting services; software/hardware; programming; and/or other IT services

[1] "M" indicates million(s), for example $1M is $1,000,000

Document updated and approved by Legal and Risk Management as of 08/16/2016

and products are involved. Limits of not less than $2M per occurrence and $2M aggregate. Coverage sufficiently broad to respond to duties and obligations undertaken by Firm, and shall include, but not be limited to, claims involving infringement of intellectual property/copyright, trademark, trade dress, invasion of privacy violations, damage to or destruction of electronic information, information theft, release of confidential and/or private information, alteration of electronic information, extortion, virus transmission, and network security. Coverage, as applicable and with sufficient limits to respond, for breach response costs, regulatory fines and penalties, credit monitoring expenses. **(IF APPLICABLE)**

K. Drone/UAV Liability Insurance where Agreements involves unmanned aerial vehicles/drones. Coverage to include products and completed operations, property damage, bodily injury with limits no less than $1M per occurrence, and $2M aggregate; may be provided by CGL endorsement subject to City's prior written approval. **(IF APPLICABLE)**

L. Longshore & Harbor Workers' Compensation Act/Jones Act for work being conducted near, above, or on "navigable waters" for not less than the above Employer's Liability Insurance limit. **(IF APPLICABLE)**

M. Garagekeeper/Hangerkeeper/Marina Operator Legal Liability Insurance and/or Hull/P&IInsurance where parking lot, valet, dealership, garage services, towing, etc. and/or operation of a hangar, marina, or air plane/ship repairer, providing safe berth, air/watercraft storage/docking (on land/ in water), fueling, tours, charters, ferries, dredges, tugs, mooring, towing, boat/aircraft equipment/repair/alteration/maintenance, etc.; cover- age against liability for damage to vehicles air/watercraft, their machinery in Firm's care, custody, or control both private & commercial. Limits at least equal to greater of $1M, value of max number of vehicles that may be in Firm's custody, or of most costly object in Firm's custody. (IF **APPLICABLE)**

N. Property Insurance and Interruption of Business CIOB) Insurance where premises, building, structure, or improved real property is leased, licensed, or otherwise occupied by Firm. Property Insurance against all risks of loss to any occupant/tenant improvements at full replacement cost with no coinsurance penalty, including fire, water, leak damage, and flood, as applicable, vandalism and malicious mischief endorsements. IOB by which minimum monthly rent will be paid to City for up to 1 year if premises are destroyed, rendered inaccessible or untenantable, including disruption of utilities, water, or telecommunications. **(IF APPLICABLE)**

0. Liquor Liability/Host Liquor Liability where Firm directly or indirectly provides alcoholic beverages, limits of at least $1M per occurrence and $1M aggregate. **(IF APPLICABLE)**

P. Educators Legal Liability Insurance where day care, after school program, recreational activities, etc. limits per G above. **(IF APPLICABLE)**

ADDITIONAL REQUIREMENTS

ACCEPTABILTIY OF INSURERS- Insurance is to be placed with insurers admitted in the State of Florida and who have a current A.M. Best rating of no less than **A-:VII** or, if not rated by A.M. Best, as otherwise approved by the City in advance and in writing.

ADDITONAL INSURED - **City, its elected officials, departments, officers, officials, employees, and volunteers together with, as applicable, any associated lender of the City shall be covered as additional insureds on all liability coverage** (e.g. CGL, AL, and Excess (Umbrella) Liability) as to liability arising out of work or operations performed by or on behalf of Firm including materials, parts, or equipment furnished in connection with such work or operations and automobiles owned, leased, hired, or borrowed by or on behalf of Firm. Coverage can be provided in the form of an endorsement to Firm's insurance (at least as broad as ISO Form CG 20 10 11 85 or **both** CG 10 20, CG 20 26, CG 20 33, or CG 20 38 **and** CG 20 37 if later revisions used).

CANCELLATION/NON-RENEWAL – Each insurance policy shall provide that at least 30 days written notice must be given to City of any cancellation, intent to non-renew, or material reduction in coverage (except aggregate liability limits) and at least 10 days' notice for non-payment of premium. Firm shall also have an independent duty to notify City in like manner, within 5 business days of Firm's receipt from its insurer of any notices of same. **If** any policy's aggregate limit is reduced, Firm shall directly take steps to have it reinstated. Notice and proof of renewal/continued coverage/certifications, etc. shall be sent to the City's notice (or Award contact) address as stated in the Agreement with a copy to the following:

☑ Contract Administration Department, 306 E Jackson St, Tampa, FL 33602 ☐ Purchasing Department, 306 E Jackson Street, Tampa, FL 33602

☐ Other:_____

CERTIFICATE OF INSURANCE (COI) – to be provided to City by insurance carrier prior to Firm beginning any work/services or taking occupancy and, if the insurance expires prior to completion of the work or services or Agreement term (as may be extended), a renewal COI at least 30 days before expiration to the above address(es). COIs shall specifically identify the Agreement and its subject (project, lease, etc.), shall be sufficiently comprehensive to insure City (named as additional insured) and Firm and to certify that coverage extends to subcontractors' acts or omissions, and as to permit the City to determine the required coverages are in place without the responsibility of examining individual policies. **Certificate Holder must be The City of Tampa, Florida.**

CLAIMS MADE – **If** any liability insurance is issued on a claims made form, Firm agrees to maintain such coverage uninterrupted for at least 3 years following completion and acceptance of the work either through purchase of an extended reporting provision or purchase of successive renewals. The Retroactive Date must be shown and be a date not later than the earlier of the Agreement date or the date performance/occupancy began thereunder.

DEDUCTIBLES/ SELF-INSURED RETENTIONS (SIR) – must be disclosed to City and, if over $500,000, approved by the City in advance and in writing, including at City's option being guaranteed, reduced, or eliminated (additionally if a SIR provides a financial guarantee guaranteeing payment of losses and related investigations, claim administration, and defense expenses). Firm shall be fully responsible for any deductible or SIR (without limiting the foregoing a policy with a SIR shall provide or be endorsed to provide that the SIR may be satisfied by either the City or named insured). In the event of loss which would have been covered but for a deductible or SIR, City may withhold from any payment due Firm, under any agreement with the City, an amount equal to same to cover such loss should full recovery not be obtained under the policy.

PERFORMANCE- All insurance policies shall be fully performable in Hillsborough County, Florida (the County), and construed in accordance with Florida law. Further, all insurance policies must expressly state that the insurance company will accept service of process in the County and that the exclusive venue for any action concerning any matter under those policies shall be in the appropriate state court of the County.

PRIMARY POLICIES - Firm's insurance coverage shall be primary insurance coverage at least as broad as ISO CG 20 01 04 13 as to the City, its elected officials, departments, officers, employees, and volunteers. Any insurance or self-insurance maintained by the City, its elected officials, departments, officers, employees, and volunteers shall be excess of the Firm's insurance and shall not contribute with it.

SUBCONTRACTORS/INDEPENDENT ASSOCIATES/CONSULTANTS/SUBTENANTS/SUBLICENSEE - **Firm shall require and verify that all such entities maintain insurance meeting all requirements stated herein with the City as an additional insured** by endorsement (ISO FORM CG 20 38, or broader) or otherwise include such entities within Firm's insurance policies. Upon City's request, Firm shall furnish complete and certified copies of copies of such entities' insurance policies, forms, and endorsements.

SUBCONTRACTOR DEFAULT INSURANCE CONTROLLED INSURANCE PROGRAM, WRAP-UP. Use requires express prior written consent of City Risk Manager.

UNAVAILABILTIY- To the fullest extent permitted by law, if Firm is out of business or otherwise unavailable at the time a claim is presented to City, Firm hereby assigns to the City all of its right, title and interest (but not any liabilities or obligations) under any applicable policies of insurance.

WAIVER OF SUBROGATION – With regard to any policy of insurance that would pay third party losses, Firm hereby grants City a waiver of any right to subrogation which any insurer of Firm may acquire against the City by virtue of the payment of any loss under such insurance. Firm agrees to obtain any endorsement that may be necessary to affect such waiver, but this provision shall apply to such policies regardless.

WAIVER/RELEASE AGREEMENT – Where Firm has a defined group of persons who might be exposed to harm (e.g. participants in an athletic event/program, volunteers) any waiver or release agreement used by Firm whereby such persons (and their parent/guardian as applicable) discharge Firm from claims and liabilities, shall include the City, its elected officials, departments, officers, officials, employees, and volunteers to the same extent as Firm.

Document updated and approved by Legal and Risk Management as of 08/16/2016

Procurement Guidelines
To Implement
Minority & Small Business Participation

Underutilized WMBE Primes by Industry Category

FORMAL PROCUREMENT

Construction	Construction-Related	Professional	Non-Professional	Goods
Black	Asian	Black	Black	Black
Hispanic	Native Am.	Hispanic	Asian	Hispanic
Native Am.	Woman	Asian	Native Am.	Asian
Woman		Native Am.		Native Am.
		Woman		Woman

Underutilized WMBE Sub-Contractors / Sub-Consultants

SUB WORK

Construction	Construction-Related	Professional	Non-Professional	Goods
Black	Black	Black	Black	Black
	Asian	Hispanic	Asian	Asian
	Native Am.	Asian	Native Am.	Native Am.
	Woman	Native Am.		Woman
		Woman		

Policy

The Guidelines apply to formal procurements and solicitations. WMBE participation will be narrowly-tailored.

Index

- Black = Black/African-American Business Enterprise
- Hispanic = Hispanic Business Enterprise
- Asian = Asian Business Enterprise
- Native Am. = Native American Business Enterprise
- Woman = Woman Business Enterprise (Caucasian)

Industry Categories

Construction is defined as: new construction, renovation, restoration, maintenance of public improvements and underground utilities.
Construction-Related Services are defined as: architecture, professional engineering, landscape architecture, design build, construction management services, or registered surveying and mapping.
Professional Services are defined as: attorney, accountant, medical doctor, veterinarian, miscellaneous consultant, etc.
Non-Professional Services are defined as: lawn maintenance, painting, janitorial, printing, hauling, security guard, etc.
Goods are defined as: all supplies, materials, pipes, equipment, machinery, appliances, and other commodities.

MBD Form-70

PROPOSAL

To the Mayor and City Council of the City of Tampa, Florida:

Legal Name of Bidder: _____

Bidder's Fictitious Name, *if applicable*: _____

Bidder is a/an: ☐ Individual ☐ Partnership* ☐ Joint Venture* ☐ LLC ☐ Corp. ☐ Other:

Bidder is organized under the laws of: ☐ State of Florida ☐ Other:

Bidder Mailing Address: _____

Bidder's Federal Employee Identification No. (FEI/EIN): _____

Bidder's License No.:_____ Bidder's FDOS (SUNBIZ) Doc. No.: _____

(See Ch. 489. FS; use entity's, individual's only if applicable)

Bidder Contact Name**: _____ Email:_____ Phone: (_____) _____

Bidder's own initial application for employment has criminal history screening practices similar in nature to the practices contained in Chapter 12, Article VI, City of Tampa Code *(Responses, whether "Yes" or "No", are for informational purposes only and will not be used as a basis of award or denial, nor as a basis for any protest)*: ☐Yes ☐No

The below named person, appearing before the undersigned authority and after being first duly sworn, for him/herself and on behalf of the entity submitting this Proposal does hereby affirm and declare as follows:

(1) He/She is of lawful age and is authorized to act on behalf of Bidder (the individual, partnership, corporation, entity, etc. submitting this Proposal) and that all statements made in this document are true and correct to the best of my knowledge.

(2) If Bidder is operating under a fictitious name, Bidder has currently complied with any and all laws and procedures governing the operation of businesses under fictitious names in the State of Florida

(3) No person or entity other than Bidder has any interest in this Proposal or in the Contract proposed to be entered into.

(4) This Proposal is made without any understanding, agreement, or connection with any person or entity making Proposal for the same purposes, and is in all respects fair and without collusion or fraud.

(5) Bidder is not in arrears to the City of Tampa, upon debt or contract, and is not a defaulter, as surety or otherwise, upon any obligation to the City of Tampa.

(6) That no officer or employee or person whose salary is payable in whole or in part from the City Treasury is, shall be or become interested, directly or indirectly, as a contracting party, partner, stockholder, surety or otherwise, in this Proposal, or in the performance of the Contract, or in the supplies, materials, or equipment and work or labor to which it relates, or in any portion of the profits thereof.

(7) Bidder has carefully examined and fully understands the Solicitation and has full knowledge of the scope, nature, and quality of the work to be performed; furthermore, Bidder has carefully examined the site of the work and that, from his own investigations, he has satisfied himself as to the nature and location of the work, the character, quality, and quantity of materials and the kinds and extent of equipment and other facilities needed for the performance of the work, the general and local conditions and all difficulties to be encountered, and all other items which may, in any way, affect the work or its performance.

(8) Bidder (including its principals) ☐ has | ☐ has NOT been debarred or suspended from contracting with a public entity.

(9) Bidder ☐ has | ☐ has NOT implemented a drug-free workplace program that meets the requirements of Section 287.087, Florida Statutes.

(10) Bidder has carefully examined and fully understands all the component parts of the Contract Documents and agrees Bidder will execute the Contract, provide the required Public Construction Bond, and will fully perform the work in strict accordance with the terms of the Contract and Contract Documents therein referred to for the following prices, to wit:

* If a Partnership or Joint Venture, attach Partnership or Joint Venture Agreement.

** Someone the City may contact with questions/correspondence regarding this Solicitation and/or permits.

Item No.	Description	Unit	Approx Quantity	Unit Price in Words	Unit Price	Total Computed Price
110.1	MOBILIZATION	LS	1.00		$	$
102.1	MAINTENANCE OF TRAFFIC	LS	1.00		$	$
104.1	EROSION CONTROL - SILT FENCE	LF	600.00		$	$
104.2	EROSION CONTROL - TURBIDITY BARRIER	LF	300.00		$	$
110.4	CLEARING & GRUBBING	AC	0.11		$	$
110.15.1	TREE PROTECTION	LF	6,000.00		$	$
110.15.2	VEGETATION REMOVAL - STUMP TREAT	AC	0.11		$	$
110.15.3	HERBACIDE TREATMENT	AC	0.12		$	$
120.2	EXCAVATION AND DISPOSAL OFF SITE	CY	304.00		$	$
120-1000	GRADING	SY	722.22		$	$
430.2	18" ROUND STORMWATER PIPE (HDPE PIPE)	LF	20.00		$	$
430.400	10" FLARED-END SECTION	EA	2.00		$	$
530	RIPRAP (RUBBLE)	TN	250.00		$	$
580-1	LANDSCAPE (SMOOTH CORDGRASS)	EA	1,312.00		$	$
580-2	LANDSCAPE (SOFTSTEM BULRUSH)	EA	216.00		$	$
580-3	LANDSCAPE (SALTMARSH BULRUSH)	EA	116.00		$	$
580-4	LANDSCAPE (MARSH HAY CORDGRASS)	EA	250.00		$	$
580-5	LANDSCAPE (BLACK NEEDLERUSH)	EA	116.00		$	$
580-6	LANDSCAPE (HERB-OF-GRACE)	EA	38.00		$	$
580-7	LANDSCAPE (SAND CORDGRASS)	EA	260.00		$	$
580-8	LANDSCAPE (MUHLY GRASS)	EA	260.00		$	$
580-9	LANDSCAPE (DUNE SUNFLOWER)	EA	198.00		$	$
580-10	SOD - BAHIA	SY	2,222.22		$	$
901.1	COARSE AGGREGATE (3"-6" BEDDING STONE)	TN	2,222.22		$	$
902.1	FINE AGGREGATE (CLEAN SAND FILL)	TN	450.00		$	$
985	GEOSYNTHETIC MATERIALS	SF	2,200.00		$	$
999	SURVEY, TESTING, QUALITY CONTROL & RECORD DRAWINGS	LS	1.00		$	$
SP-11.16	CONTINGENCY ALLOWANCE	LS	1.00	EIGHT THOUSAND FIVE HUNDRED DOLLARS AND NO CENTS	$ 8,500.00	$8,500.00
					TOTAL :	

Computed Total Price in Words: _____

_____dollars and _____ cents.

Computed Total Price in Figures: $_____

Bidder acknowledges that the following addenda have been received and that the changes covered by the addendum(s) have been taken into account in this proposal: #1 ____ #2 ____ #3 ____ #4 ____ #5 ____ #6 ____ #7 ____ #8 ____.

Bidder acknowledges the requirements of the City of Tampa's Equal Business Opportunity Program.

Bidder acknowledges that it is aware of Florida's Trench Safety Act (Sections 553.60-553.64, Florida Statutes), and agrees that Bidder together with any involved subcontractors will comply with all applicable trench safety standards. Bidder further acknowledges that included in the various items of this Proposal and the total bid price (as applicable) are costs for complying with the Trench Safety Act. Bidder further identifies the costs and methods summarized below:

	Trench Safety Measure (Description)	Unit of Measure (LF, SY)	Unit Quantity	Unit Cost	Extended Cost
A.					
B.					
C.					

Total Cost: $ _____

Accompanying this Proposal is a certified check, cashier's check or Tampa Bid Bond (form included herein must be used) for at least five percent (5%) of the total amount of the Proposal which check shall become the property of the City, or which bond shall become forthwith due and payable to the City, if this Proposal shall be accepted by the City and the Bidder shall fail to enter into a legally binding contract with and to furnish the required Public Construction Bond to the City within twenty (20) days after the date of its receipt of written Notice of Award by the City so to do.

FAILURE TO COMPLETE THE ABOVE MAY RESULT IN THE PROPOSAL BEING DECLARED NON-RESPONSIVE.

[SEAL]

Name of Bidder:_____

Authorized Signature:_____

Signer's Printed Name:_____

Signer's Title: _____

STATE OF _____

COUNTY OF _____

For an entity: The forgoing instrument was sworn (or affirmed) before me this ____ day of _____, 20____ by _____ as _____ of _____, a/n □ Partnership □ Joint Venture □ LLC □ Corp □ Other:_____, on behalf of such entity. Such individual is □ personally known to me or □ produced a/n _____ state driver's license as identification.

For an individual: The forgoing instrument was sworn (or affirmed) before me this ____ day of _____, 20____ by _____, who is □ personally known to me or □ produced a/n _____ state driver's license as identification.

[NOTARY SEAL]

_____

Notary Public, State of _____

Notary Printed Name: _____

Commission No.: _____

My Commission Expires: _____

Good Faith Effort Compliance Plan Guidelines

for Women/Minority Business Enterprise\Small Local Business Enterprise Participation
City of Tampa - Equal Business Opportunity Program
(MBD Form 50 – detailed instructions on page 2 of 2)

Contract Name_____ Bid Date _____

Bidder/Proposer_____

Signature _____ Date _____

Name _____ Title _____

The Compliance Plan with attachments is a true account of Good Faith Efforts (GFE) made to achieve the participation goals as specified for Women/Minority Business Enterprises/Small Local Business Enterprises (WMBE/SLBE) on the referenced contract:

□ The WMBE/SLBE participation Goal is Met or Exceeded. See DMI Forms 10 and 20 which accurately report all subcontractors solicited and all subcontractors to-be-utilized.

□ The WMBE/SLBE participation Goal is Not Achieved. The following list is an overview of the baseline GFE action steps already performed. Furthermore, it is understood that these GFE requirements are weighted in the compliance evaluation based on the veracity and demonstrable degree of documentation provided with the bid/proposal:

(Check applicable boxes below. Must enclose supporting documents accordingly with remarks)

(1) Solicited through reasonable and available means the interest of WMBE/SLBEs that have the capability to perform the work of the contract. The Bidder or Proposer must solicit this interest within sufficient time to allow the WMBE/SLBEs to respond. The Bidder or Proposer must take appropriate steps to follow up initial solicitations with interested WMBE/SLBEs. □ See DMI report forms for subcontractors solicited. □ See enclosed supplemental data on solicitation efforts. □ Qualifying Remarks:

(2) Provided interested WMBE/SLBEs with adequate, specific scope information about the plans, specifications, and requirements of the contract, including addenda, in a timely manner to assist them in responding to the requested-scope identified by bidder/proposer for the solicitation. □ See enclosed actual solicitations used. □ Qualifying Remarks:

(3) Negotiated in good faith with interested WMBE/SLBEs that have submitted bids (e.g. adjusted quantities or scale). Documentation of negotiation must include the names, addresses, and telephone numbers of WMBE/SLBEs that were solicited; the date of each such solicitation; a description of the information provided regarding the plans and specifications for the work selected for subcontracting; and evidence as to why agreements could not be reached with WMBE/SLBEs to perform the work. Additional costs involved in soliciting and using subcontractors is not a sufficient reason for a bidder/proposer's failure to meet goals or achieve participation, as long as such costs are reasonable. Bidders are not required to accept excessive quotes in order to meet the goal.
□ DMI Utilized Forms for sub-(contractor/consultant) reflect genuine negotiations □ This project is an RFQ/RFP in nature and negotiations are limited to clarifications of scope/specifications and qualifications. □ See enclosed documentation. □ Qualifying Remarks:

(4) Not rejecting WMBE/SLBEs as being unqualified without justification based on a thorough investigation of their capabilities. The WMBE/SLBEs standing within its industry, membership in specific groups, organizations / associations and political or social affiliations are not legitimate causes for rejecting or not soliciting bids to meet the goals.
□ Not applicable. □ See attached justification for rejection of a subcontractor's bid or proposal. □ Qualifying Remarks:

(5) Made scope(s) of work available to WMBE/SLBE subcontractors and suppliers; and, segmented portions of the work or material consistent with the available WMBE/SLBE subcontractors and suppliers, so as to facilitate meeting the goal. □ Sub-Contractors were allowed to bid on their own choice of work or trade without restriction to a pre-determined portion. □ See enclosed comments. □ Qualifying Remarks:

(6) Made good faith efforts, despite the ability or desire of Bidder/Proposer to perform the work of a contract with its own forces/organization. A Bidder/Proposer who desires to self-perform the work of a contract must demonstrate good faith efforts if the goal has not been met. □ Sub-Contractors were not prohibited from submitting bids/proposals and were solicited on work typically self-performed by the prime. □ Qualifying Remarks:

(7) Segmented portions of the work to be performed by WMBE/SLBEs in order to increase the likelihood that the goals will be met. This includes, where appropriate, breaking out contract work items into economically feasible units (quantities/scale) to facilitate WMBE/SLBE participation, even when the Bidder/Proposer might otherwise prefer to perform these work items with its own forces. □ Sub-Contractors were allowed to bid on their own choice of work or trade without restriction to a pre-determined portion. □ Sub-Contractors were not prohibited from submitting bids/proposals and were solicited on work typically self-performed by the prime. □ See enclosed comments. □ Qualifying Remarks:

(8) Made efforts to assist interested WMBE/SLBEs in obtaining bonding, lines of credit, or insurance as required by the city or contractor.
□ See enclosed documentation on initiatives undertaken and methods to accomplish. □ Qualifying Remarks:

(9) Made efforts to assist interested WMBE/SLBEs in obtaining necessary equipment, supplies, materials, or related assistance or services, including participation in an acceptable mentor-protégé program. □ See enclosed documentation of initiatives and/or agreements. □ Qualifying Remarks:

(10) Effectively used the services of the City and other organizations that provide assistance in the recruitment and placement of WMBE/SLBEs.
□ See enclosed documentation. □ The following services were used:

Note: Provide any unsolicited information that will support the Bid/RFP Compliance Evaluation. □ Named Documents Are:

Participation Plan: Guidance for Complying with Good Faith Efforts Outreach

(page 2 of 2)

1. All firms on the WMBE/SLBE Goal Setting List must be solicited and documentation provided for email, fax, letters, phone calls, and other methods of outreach/communication with the listed firms. The DMI Solicited and DMI-Utilized forms must be completed for all firms solicited or utilized. Other opportunities for subcontracting may be explored by consulting the City of Tampa MBD Office and/or researching the on-line Diversity Management Business System Directory for Tampa certified WMBE/SLBE firms.

2. Solicitation of WMBE/SLBEs, via written or electronic notification, should provide specific information on the services needed, where plans can be reviewed and assistance offered in obtaining these, if required. Solicitations should be sent a minimum of a week (i.e. 5 business days or more) before the bid/proposal date. Actual copies of the bidder's solicitation containing their scope specific instructions should be provided.

3. With any quotes received, a follow-up should be made when needed to confirm detail scope of work. For any WMBE/SLBE low quotes rejected, an explanation Shall be provided detailing negotiation efforts.

4. If a low bid WMBE/SLBE is rejected or deemed unqualified the contractor must provide an explanation and supporting documentation for this decision.

5. Prime Shall break down portions of work into economical feasible opportunities for subcontracting. The WMBE/SLBE directory may be useful in identifying additional subcontracting opportunities and firms not listed in the "WMBE/SLBE Goal Setting Firms List."

6. Contractor Shall not preclude WMBE/SLBEs from bidding on any part of work, even if the Contractor may desire to self-perform the work.

7. Contractor Shall avoid relying solely on subcontracting out work-scope where WMBE/SLBE availability is not sufficient to attain the pre-determined subcontract goal set for the Bid or when targeted sub-consultant participation is stated within the RFP/RFQ.

8. In its solicitations, the Bidder should offer assistance to WMBE/SLBEs in obtaining bonding, insurance, et cetera, if required of subcontractors by the City or Prime Contractor.

9. In its solicitation, the Bidder should offer assistance in obtaining equipment for a specific job to WMBE/SLBEs, if needed.

10. Contractor should use the services offered by such agencies as the City of Tampa Minority and Small Business Development Office, Hillsborough County Entrepreneur Collaborative Center, Hillsborough County Economic Development Department's MBE/SBE Program and the NAACP Empowerment Center to name a few for the recruitment and placement of WMBEs/SLBEs.

Failure to Complete, Sign and Submit Both Forms 10 & 20 SHALL render the Bid or Proposal Non-Responsive

Page 1 of 4 – DMI Solicited/Utilized Schedules
City of Tampa – Schedule of All Solicited Sub-(Contractors/Consultants/Suppliers)
(FORM MBD-10)

Contract No.:_____ Contract Name:_____
Company Name:_____ Address:_____
Federal ID:_____ Phone:_____ Fax:_____ Email:_____

Check applicable box(es). Detailed Instructions for completing this form are on page 2 of 4.
[ ] No Firms were contacted or solicited for this contract.
[ ] No Firms were contacted because:_____
[ ] See attached list of additional Firms solicited and all supplemental information (List must comply to this form)
Note: Form MBD-10 must list ALL subcontractors solicited including Non-minority/small businesses

NIGP Code Categories: Buildings = 909, General = 912, Heavy = 913, Trades = 914, Architects = 906, Engineers & Surveyors = 925, Supplier = 912-77

S = SLBE W=WMBE O = Neither Federal ID	Company Name Address Phone, Fax, Email	Type of Ownership (F=Female M=Male) BF BM = African Am. HF HM = Hispanic AF AM = Asian Am. NF NM = Native Am. CF CM = Caucasian	Trade or Services NIGP Code (listed above)	Contact Method L=Letter F=Fax E=Email P=Phone	Quote or Response Received Y/N

Failure to Complete, Sign and Submit this form with your Bid or Proposal Shall render the Bid Non-Responsive (Do Not Modify This Form)

It is hereby certified that the information provided is an accurate and true account of contacts and solicitations for sub–contracting opportunities on this contract.

Signed:_____ Name/Title:_____ Date:_____

Failure to Complete, Sign and Submit Both Forms 10 & 20 SHALL render the Bid or Proposal Non-Responsive
Forms must be included with Bid / Proposal

Instructions for completing The Sub-(Contractors/Consultants/ Suppliers) Solicited Form (Form MBD-10)

This form must be submitted with all bids or proposals. **All** subcontractors (regardless of ownership or size) solicited and subcontractors from whom unsolicited quotations were received must be included on this form. The instructions that follow correspond to the headings on the form required to be completed. Note: Ability or desire to self-perform all work shall not exempt the prime from Good Faith Efforts to achieve participation.

- **Contract No.** This is the number assigned by the City of Tampa for the bid or proposal.
- **Contract Name.** This is the name of the contract assigned by the City of Tampa for the bid or proposal.
- **Contractor Name.** The name of your business and/or doing business as (dba) if applicable.
- **Address.** The physical address of your business.
- **Federal ID.** FIN. A number assigned to your business for tax reporting purposes.
- **Phone.** Telephone number to contact business.
- **Fax.** Fax number for business.
- **Email.** Provide email address for electronic correspondence.
- **No Firms were contacted or solicited for this contract.** Checking the box indicates that a pre-determined Subcontract Goal or Participation Plan Requirement was not set by the City resulting in your business not using subcontractors and will self-perform all work. If during the performance of the contract you employ subcontractors, the City must pre-approve subcontractors. Use of the "Sub-(Contractors/Consultants/Suppliers) Payments" form (MBD Form-30) must be submitted with every pay application and invoice. Note: Certified SLBE or WMBE firms bidding as Primes are not exempt from outreach and solicitation of subcontractors.
- **No Firms were contacted because.** Provide brief explanation why no firms were contacted or solicited.
- **See attached documents.** Check box, if after you have completed the DMI Form in its entirety, you need more space to list additional firms and/or if you have supplemental information/documentation relating to the form. All DMI data not submitted on the MBD Form-10 must be in the same format and have all requested data from MBD Form-10 included.

The following instructions are for information of any and all subcontractors solicited.

- **"S" = SLBE, "W" = WMBE.** Enter "**S**" for firms Certified by the City as Small Local Business Enterprises and/or "**W**" for firms Certified by the City as either Women/Minority Business Enterprise; **"O" = Non-certified others**.
- **Federal ID.** FIN. A number assigned to a business for tax reporting purposes. This information is critical in proper identification and payment of the contractor/subcontractor.
- **Company Name, Address, Phone & Fax**. Provide company information for verification of payments.
- **Type of Ownership.** Indicate the Ethnicity and Gender of the owner of the subcontracting business.
- **Trade, Services, or Materials** indicate the trade, service, or materials provided by the subcontractor. NIGP codes aka "National Institute of Governmental Purchasing" are listed at top section of document.
- **Contact Method L=letter, F=fax, E=Email, P=Phone.** Indicate with letter the method(s) of soliciting for bid.
- **Quote or Resp. (response) Rec'd (received) Y/N**. Indicate "Y" Yes if you received a quotation or if you received a response to your solicitation. Indicate "N" No if you received no response to your solicitation from the subcontractor. Must keep records: log, ledger, documentation, etc. that can validate/verify.

If additional information is required or you have questions, please contact the Equal Business Opportunity Program - Minority and Small Business Development Office at (813) 274-5522.

Failure to Complete, Sign and Submit Both Forms 10 & 20 SHALL render the Bid or Proposal Non-Responsive

City of Tampa – Schedule of All To-Be-Utilized Sub-(Contractors/Consultants/Suppliers)

(FORM MBD-20)

Contract No.:_____ Contract Name:_____
Company Name:_____Address:_____
Federal ID:_____ Phone:_____ Fax:_____ Email:_____

Check applicable box(es). Detailed Instructions for completing this form are on page 4 of 4.

[ ] See attached list of additional Firms Utilized and all supplemental information (List must comply to this form)
Note: Form MBD-20 must list ALL subcontractors To-Be-Utilized including Non-minority/small businesses

[ ] No Subcontracting/consulting (of any kind) will be performed on this contract.

[ ] No Firms are listed to be utilized because:_____

NIGP Code General Categories: Buildings = 909, General = 912, Heavy = 913, Trades = 914, Architects = 906, Engineers & Surveyors = 925, Supplier = 912-77

Enter "S" for firms Certified as Small Local Business Enterprises, "W" for firms Certified as Women/Minority Business Enterprise, "O" for Other Non-Certified

S = SLBE W=WMBE O =Neither Federal ID	Company Name Address Phone, Fax, Email	Type of Ownership (F=Female M=Male) BF BM = African Am. HF HM = Hispanic Am. AF AM = Asian Am. NF NM = Native Am. CF CM = Caucasian	Trade, Services, or Materials NIGP Code Listed above	$ Amount of Quote. Letter of Intent (LOI) if available	Percent of Scope or Contract %

Failure to Complete, Sign and Submit this form with your Bid or Proposal Shall render the Bid Non-Responsive. (Do Not Modify This Form)

Total ALL Subcontract / Supplier Utilization $_____
Total SLBE Utilization $ _____
Total WMBE Utilization $ _____
Percent SLBE Utilization of Total Bid/Proposal Amt. _____% Percent WMBE Utilization of Total Bid/Proposal Amt. _____%

It is hereby certified that the following information is a true and accurate account of utilization for sub-contracting opportunities on this Contract.

Signed:_____ Name/Title:_____ Date:_____

Failure to Complete, Sign and Submit Both Forms 10 & 20 SHALL render the Bid or Proposal Non-Responsive
Forms must be included with Bid / Proposal

Instructions for completing The Sub-(Contractors/Consultants/ Suppliers) to be Utilized Form

(Form MBD-20)

This form must be submitted with all bids or proposals. All subcontractors (regardless of ownership or size) projected to be utilized must be included on this form. Note: Ability or desire to self-perform all work shall not exempt the prime from Good Faith Efforts to achieve participation.

Contract No. This is the number assigned by the City of Tampa for the bid or proposal.

- **Contract Name.** This is the name of the contract assigned by the City of Tampa for the bid or proposal.
- **Contractor Name.** The name of your business and/or doing business as (dba) if applicable.
- **Address.** The physical address of your business.
- **Federal ID.** FIN. A number assigned to your business for tax reporting purposes.
- **Phone.** Telephone number to contact business.
- **Fax.** Fax number for business.
- **Email.** Provide email address for electronic correspondence.
- **No Subcontracting/consulting (of any kind) will be performed on this contract.** Checking box indicates your business will not use subcontractors when no Subcontract Goal or Participation Plan Requirement was set by the City, but will self-perform all work. When subcontractors are utilized during the performance of the contract, the "Sub-(Contractors/Consultants/Suppliers) Payments" form (MBD Form-30) must be submitted with every pay application and invoice. Note: certified SLBE or WMBE firms bidding as Primes are not exempt from outreach and solicitation of subcontractors, including completion and submitting Form-10 and Form-20.
- **No Firms listed To-Be-Utilized.** Check box; provide brief explanation why no firms were retained when a goal or participation plan requirement was set on the contract. Note: mandatory compliance with Good Faith Effort outreach (GFECP) requirements applies (MBD Form-50) and supporting documentation must accompany the bid.
- **See attached documents.** Check box, if after completing the DMI Form in its entirety, you need more space to list additional firms and/or if you have supplemental information/documentation relating to the scope/value/percent utilization of subcontractors. Reproduce copies of MBD-20 and attach. All data not submitted on duplicate forms must be in the same format and content as specified in these instructions.

The following instructions are for information of Any and All subcontractors To Be Utilized.

- **Federal ID.** FIN. A number assigned to a business for tax reporting purposes. This information is critical in proper identification of the subcontractor.
- **"S" = SLBE, "W" = WMBE.** Enter "**S**" for firms Certified by the City as Small Local Business Enterprises and/or "**W**" for firms Certified by the City as Women/Minority Business Enterprise; **"O" = Non-certified others**.
- **Company Name, Address, Phone & Fax**. Provide company information for verification of payments.
- **Type of Ownership.** Indicate the Ethnicity and Gender of the owner of the subcontracting business.
- **Trade, Services, or Materials (NIGP code if Known)** Indicate the trade, service, or material provided by the subcontractor. Abbreviated list of NIGP is available at http:/www.tampagov.net/mbd "Information Resources".
- **Amount of Quote, Letters of Intent** (required for both SLBEs and WMBEs).
- **Percent of Work/Contract.** Indicate the percent of the total contract price the subcontract(s) represent. For CCNA only (i.e. Consultant A/E Services) you must indicate subcontracts as percent of total scope/contract.
- **Total Subcontract/Supplier Utilization.** – Provide total dollar amount of all subcontractors/suppliers projected to be used for the contract. (Dollar amounts may be optional in CCNA depending on solicitation format).
- **Total SLBE Utilization.** Provide total dollar amount for all projected SLBE subcontractors/Suppliers used for this contract. (Dollar amounts may be optional in CCNA proposals depending on the solicitation format).
- **Total WMBE Utilization.** Provide total dollar amount for all projected WMBE subcontractors/Suppliers used for this contract. (Dollar amounts may be optional in CCNA proposals depending on the solicitation format).
- **Percent SLBE Utilization.** Total amount allocated to SLBEs divided by the total bid/proposal amount.
- **Percent WMBE Utilization.** Total amount allocated to WMBEs divided by the total bid/proposal amount.

If additional information is required or you have questions, please contact the Equal Business Opportunity Program - Minority and Small Business Development Office at (813) 274-5522.

TAMPA BID BOND
Contract 20-C-00012; Ignacio Haya Park Living Shoreline

KNOW ALL MEN BY THESE PRESENTS, that we, _____

_____

(hereinafter called the Principal) and _____

(hereinafter called the Surety) a Corporation chartered and existing under the laws of the State of _____, with its principal offices in the City of _____, and authorized to do business in the State of Florida, are held and firmly bound unto the City of Tampa, a Municipal Corporation of Hillsborough County, Florida, in the full and just sum of 5% of the amount of the (Bid) (Proposal) good and lawful money of the United States of America, to be paid upon demand of the City of Tampa, Florida, to which payment will and truly to be made we bind ourselves, our heirs, executors, administrators, successors, and assigns, jointly and severally and firmly these presents.

WHEREAS, the Principal is about to submit, or has submitted to the City of Tampa, Florida, a Proposal for the construction of certain facilities for the City designated Contract 20-C-00012, Ignacio Haya Park Living Shoreline 15.

WHEREAS, the Principal desires to file this Bond in accordance with law, in lieu of a certified Bidder's check otherwise required to accompany this Proposal.

NOW, THEREFORE: The conditions of this obligation are such that if the Proposal be accepted, the Principal shall, within twenty (20) days after the date of receipt of written Notice of Award, execute a contract in accordance with the Proposal and upon the terms, conditions and price set forth therein, in the form and manner required by the City of Tampa, Florida and execute a sufficient and satisfactory Public Construction Bond payable to the City of Tampa, Florida in an amount of one hundred percent (100%) of the total contract price, in form and with security satisfactory to said City, then this Bid Bond obligation is to be void; otherwise to be and remain in full force and virtue in law, and the Surety shall, upon failure of the Principal to comply with any or all of the foregoing requirements within the time specified above, immediately pay to the aforesaid City, upon demand, the amount thereof, in good and lawful money of the United States of America, not as a penalty, but as liquidated damages.

IN TESTIMONY THEREOF, the Principal and Surety have caused these presents to be duly signed and sealed this _____ day of _____, 20___.

Principal _____

BY _____

TITLE _____

BY _____

TITLE _____

(SEAL) _____
Producing Agent

_____
Producing Agent's Address

_____
Name of Agency

_____
The addition of such phrases as "not to exceed" or like import shall render the (Bid) (Proposal)non-responsive.

AGREEMENT

For furnishing all labor, materials and equipment, together with all work incidental thereto, necessary and required for the performance of the work for the construction of Contract 20-C-00012 in accordance with your Proposal dated _____, amounting to a total of $_____ as completed in accordance with subsections I-2.09 and I-2.10 of the Instruction to Bidders.

This AGREEMENT, made and entered into in triplicate, between the City of Tampa, Florida, hereinafter called the City, and _____ hereinafter called the Contractor, as of the _____ day of _____, 20___ when the City Council of the City of Tampa, Florida adopted a Resolution authorizing, among other things, the Mayor's execution of this Agreement.

WITNESSETH that, in consideration of the mutual stipulations, agreements, and covenants herein contained, the parties hereto have agreed and hereby agree with each other, the Party of the First Part for itself, its successors and assigns, and the Party of the Second Part for itself, or himself, or themselves, and its successors and assigns, or his or their executors, administrators and assigns, as follows:

Contract 20-C-00012; Ignacio Haya Park Living Shoreline 15, shall include, but not be limited to, construction of new, and repair of existing, breakwater in the Hillsborough River including tree protection, backfilling and grading of eroded shoreline, rip-rap stabilization of shoreline around existing stormwater outfalls, mechanical and chemical removal of invasive plant species, grading of stormwater ditch, shoreline plantings and landscaping with all associated work required for a complete project in accordance with the Contract Documents.

Contract Documents referred to in Article 1.01 of this Agreement also includes this volume, applicable standard drawings, the plans and any provisions referred to whether actually attached or not.

TAMPA AGREEMENT

SECTION 1
GENERAL

ARTICLE 1.01 THE CONTRACT

Except for titles, subtitles, headings, running headlines, and tables of contents (all of which are printed herein merely for convenience), the following, except for such portions thereof as may be specifically excluded, constitute the Contract:

The Notice to Bidders;
The Instructions to Bidders, including Special Instructions and General Instructions;
The Proposal;
The Bid Bond;
The Certification of Nonsegregated Facilities;
The Notice of Award;
The Agreement;
The Performance Bond;
The Notice To Proceed;
The Specifications, including the General Provisions, the Workmanship and Materials, the Specific Provisions or the Contract Items
The Plans;
All Supplementary Drawings Issued after award of the Contract;
All Addenda issued by the City prior to the receipt of proposals;
All provisions required by law to be inserted in this Contract, whether actually inserted or not.

ARTICLE 1.02 DEFINITIONS

The following words and terms, or pronouns used in their stead, shall, wherever they appear in this Contract, be construed as follows, unless different meaning is clear from the context:

(a)"City" shall mean the City of Tampa, Florida, represented by its Mayor and City Council, Party of the First Part, or such other City official as shall be duly empowered to act for the City on matters relating to this Contract.

(b)"Contractor" shall mean the Party of the Second Part hereto, whether corporation, firm or individual, or any combination thereof, and its, their, or his successors, personal representatives, executors, administrators, and assigns, and any person, firm or corporation who or which shall at any time be substituted in the place of the Party of the Second Part under this Contract.

(c)"Engineer" shall mean the Director of the Department or his duly authorized representative.

(d)"Consultant" shall mean the engineering or architectural firm or individual employed by the City to consult with and advise the City in the construction of the project.

(e)"Surety" shall mean any person, firm or corporation that has executed as Surety the Contractor's Performance Bond securing the performance of this Contact.

(f)"The Work" shall mean everything expressly or implied required to be furnished and done by the Contractor under the Contract, and shall include both Contract Work and Extra Work.

(g)"Contract Work" shall mean everything expressly or implied required to be furnished and done by the Contractor by any one or more of the Contract parts referred to in Article 1.01 hereof, except Extra Work, as hereinafter defined; it being understood that, in case of any inconsistency in or between any part or parts of this Contract, the Engineer shall determine which shall prevail.

(h)"Contract" or "Contract Documents" shall mean each of the various part of the Contract referred to in Article 1.01 hereof, both as a whole and severally.

(i)"Extra Work" shall mean work other than that required either expressly or implied by the contract in its present form.

(j)"Plans" shall mean only those drawings specifically referred to as such in these documents, or in any Addendum. Drawings issued after the execution of the Contract to explain further, or to illustrate, or to show changes in the work, will be known as "Supplementary Drawings" and shall be binding upon the Contractor with the same force as the Plans.

(k)"Specifications" shall mean all of the directions, requirements, and standards of performance applying to the work, as hereinafter detailed and designated as such, or which may be issued in an addendum.

(l)"Addendum or Addenda" shall mean the additional contract provisions issued in writing prior to the receipt of bids.

(m)"Notice" shall mean written notice. Notice shall be served upon the Contractor, either personally or by leaving the said notice at his residence or with any employee found on the work, or addressed to the Contractor at the residence or place of business given in his proposal and deposited in a postpaid wrapper in any post office box regularly maintained by the United States Post Office.

(n)"Project" shall mean the entire improvement package or related work. The "project" may consist of several different, but related, contracts.

(o)"Site" shall mean, and be limited to, the area upon or in which the Contractor's operations are carried on and such other appropriate areas as may be designed as such by the Engineer.

(p)"Subcontractor" shall mean any person, firm, or corporation, other than employees of the Contractor, who or which contracts with the Contractor to furnish, or actually furnishes labor, or labor and materials, or labor and equipment or labor, materials, and equipment at the site.

(q)Whenever in the Contract the words "directed", "required", "permitted", "ordered", "designated", "prescribed", and words of like import are used, they shall imply the direction, requirement, permission, order, designation, or prescription of the Engineer; and "approved", "acceptable", "satisfactory", "in the judgement of", and words of like import shall mean approved by, or acceptable to, or satisfactory to, or in the judgment of the Engineer.

(r)Whenever in the Contract the word "day" is used, it shall mean calendar day.

(s)"Final Acceptance" shall mean acceptance of the

work as evidenced by an official resolution of the City. Such acceptance shall be deemed to have taken place only if and when an approving resolution has been adopted by the City Council. The final acceptance shall be signed only after the City has assured itself by tests, inspection, or otherwise, that all of the provisions of the Contract have been carried out to its satisfaction.

(t)"Eastern Standard Time" shall be construed as the time being observed in the City on the day proposals are received or other documents issued or signed.

SECTION 2
POWERS OF THE CITY'S REPRESENTATIVES

ARTICLE 2.01 THE ENGINEER

It is covenanted and agreed that the Engineer, in addition to those matters elsewhere herein expressly made subject to his determination, direction, or approval, shall have the power, subject to such express provisions and limitations herein contained as are not in conflict herewith, and subject to review by the Mayor and City Council:

(a)To monitor the performance of the work.

(b)To determine the amount, kind, quality, sequence, and location of the work to be paid for hereunder and, when completed, to measure such work for payment.

(c)To determine all questions of an engineering character in relation to the work, to interpret the Plans, Specifications and Addenda.

(d)To determine how the work of this Contract shall be coordinated with the work of other contractors engaged simultaneously on this project.

(e)To make minor changes in the work as he deems necessary, provided such changes do not result in a net increase in the cost to the City or to the Contractor of the work to be done under the Contract.

(f)To amplify the Plans, add explanatory information and furnish additional Specifications and Drawings consistent with the intent of the Contract Documents.

The power of the Engineer shall not be limited to the foregoing enumeration, for it is the intent of this Contract that all of the work shall be subject to his determinations and approval, except where the determination or approval of someone other than the Engineer is expressly called for herein and except as subject to review by the Mayor and City Council. All orders of the Engineer requiring the Contractor to perform work as Contract work shall be promptly obeyed by the Contractor.

The Engineer shall not, however, have the power to issue an extra work order, and the performance of such work on the order of the Engineer without previously obtaining written confirmation thereof from the Mayor in accordance with Article 7.02 hereof may constitute a waiver of any right to extra compensation therefor. The Contractor is warned that the Engineer has no power to change the terms and provisions of this Contract, except minor changes where such change results in no net increase in the Contract Price.

ARTICLE 2.02 DIRECTOR

The Director of the Department in addition to those matters expressly made subject to his determination, direction or approval in his capacity as "Engineer", shall also have the power:

(a)To review any and all questions in relation to this Contract and its performance, except as herein otherwise specifically provided, and his determination upon such review shall be final and conclusive upon the Contractor.

(b)With the approval of the Mayor and City Council to authorize modifications or changes in the Contract so as to require: (1) the performance of extra work, or (2) the omission of Contract work whenever he deems it in the interest of the City to do so, or both.

(c)To suspend the whole or any part of the work whenever, in his judgment, such suspension is required: (1) in the interest of the City generally, or (2) to coordinate the work of the various Contractors engaged on this project, or (3) to expedite the completion of the entire project, even though the completion of this particular Contract may be thereby delayed, <u>without compensation to the Contractor for such suspension other than extending the time for the completion of the work, as much as it may have been, in the opinion of the City, delayed by such a suspension.</u>

(d)If, before the final acceptance of all the work contemplated herein, it shall be deemed necessary to take over, use, occupy, or operate any part of the completed or partly completed work, the Engineer shall have the right to do so and the Contractor will not, in any way, interfere with or object to the use, occupation, or operation of such work by the City after receipt of notice in writing from the Engineer that such work or part thereof will be used by the City on and after the date specified in such notice. Such taking over, use, occupancy or operation of any part of the completed or partially completed work shall not constitute final acceptance or approval of any such part of the work.

ARTICLE 2.03 NO ESTOPPEL

The City shall not, nor shall any department, officer, agent, or employee thereof, be bound, precluded, or estopped by any determination, decision, acceptance, return, certificate, or payment made or given under or in connection with this Contract by any officer, agent or employee of the City at any time either before or after final completion and acceptance of the work and payment therefor: (a) from showing the true and correct classification, amount, quality, or character of the work done, or that any determination, decision, acceptance, return certificate or payment is untrue, incorrect or improperly made in any particular, or that the work or any part thereof does not in fact conform to the requirements of the Contract Documents, and (b) from demanding and recovering from the Contractor any overpayments made to him or such damages as it may sustain by reason his failure to comply with the requirements of the Contract of Documents, or both.

ARTICLE 2.04 NO WAIVER OF RIGHTS

Neither the inspection, nor any order, measurements or certificate of the City or its employees, officers, or agents, nor by any order of the City for payment of money, nor any money, nor payments for or acceptance of the whole or any part of the work by the City, nor any extension of time, nor any changes in the Contract, Specifications or Plans, nor any possession by the City or its employees shall operate as a

waiver of any provisions of this Contract, nor any power herein provided nor shall any waiver of any breach of this Contract be held as a waiver of any other subsequent breach.

Any remedy provided in this Contract shall be taken and construed as cumulative, namely, in addition to each and every other suit, action, or legal proceeding. The City shall be entitled as of right to an injunction against any breach of the provisions of this Contract.

SECTION 3
PERFORMANCE OF WORK

ARTICLE 3.01 CONTRACTOR'S RESPONSIBILITY

The Contractor shall do all the work and furnish, at his own cost and expense, all labor, materials, equipment, and other facilities, except as herein otherwise provided, as may be necessary and proper for performing and completing the work under this Contract. The Contractor shall be responsible for the entire work until completed and finally accepted by the City.

The work shall be performed in accordance with the true intent and meaning of the Contract Documents. Unless otherwise expressly provided, the work must be performed in accordance with the best modern practice, with materials as specified and workmanship of the highest quality, all as determined by and entirely to the satisfaction of the Engineer.

Unless otherwise expressly provided, the means and methods of construction shall be such as the Contractor may choose, subject, however, to the approval of the Engineer. Only adequate and safe procedure, methods, structures and equipment shall be used. The Engineer's approval or the Engineer's failure to exercise his right thereon shall not relieve the Contractor of obligations to accomplish the result intended by the Contract, nor shall such create a cause of action for damages.

ARTICLE 3.02 COMPLIANCE WITH LAWS

The Contractor must comply with all local, State and Federal laws, rules, ordinances and regulations applicable to this Contract and to the work done hereunder, and must obtain, at his own expense, all permits, licenses or other authorization necessary for the prosecution of the work.

No work shall be performed under this Contract on Sundays, legal holidays or after regular working hours without the express permission of the Engineer. Where such permission is granted, the Engineer may require that such work be performed without additional expense to the City.

ARTICLE 3.03 INSPECTION

During the progress of the work and up to the date of final acceptance, the Contractor shall, at all times, afford the representatives of the City, the Florida Department of Environmental Regulation, and if applicable, the Federal Environmental Protection Agency and the Federal Department of Labor every reasonable, safe and proper facility for inspecting the work done or being done at the site. The inspection of any work shall not relieve the Contractor of any of his obligations to perform proper and satisfactory work as herein specified. Finished or unfinished work found not to be in strict accordance with the Contract shall be replaced as directed by the Engineer, even though such work may have been previously approved and payment made therefor.

The City shall have the right to reject materials and workmanship which are defective or require their correction. Rejected work and materials must be promptly removed from the site, which must at all times be kept in a reasonably clean and neat condition.

Failure or neglect on the part of the City to condemn or reject bad or inferior work or materials shall not be construed to imply an acceptance of such work or materials, if it becomes evident at any time prior to the final acceptance of the work by the City. Neither shall it be construed as barring the City at any subsequent time from the recovery of damages of such a sum of money as may be needed to build anew all portions of the work in which inferior work or improper materials were used, wherever found.

Should it be considered necessary or advisable by the City at any time before final acceptance of the entire work to make examinations of work already completed, by removing or tearing out all or portions of such work, the Contractor shall, on request, promptly furnish all necessary facilities, labor, and material for that purpose. If such work is found to be defective in any material respect, due to the fault of the Contractor or his subcontractors, he shall defray all expenses of such examination and of satisfactory reconstruction. If, however, such work is found to meet the requirements of the Contract, the cost of examination and restoration of the work shall be considered an item of extra work to be paid for in accordance with the provisions of Article 7.02 hereof.

ARTICLE 3.04 PROTECTION

During performance and until final acceptance, the Contractor shall be under an absolute obligation to protect the finished and unfinished work against any damage, loss, or injury. The Contractor shall take proper precaution to protect the finished work from loss or damage, pending completion and the final acceptance of all the work included in the entire Contract, provided that such precaution shall not relieve the Contractor from any and all liability and responsibility for loss or damage to the work occurring before final acceptance by the City. Such loss or damage shall be at the risk of and borne by the Contractor, whether arising from acts or omissions of the Contractor or others. In the event of any such loss or damage, the Contractor shall forthwith repair, replace, and make good the work without extension of time therefor, except as may be otherwise provided herein.

The provisions of this Article shall not be deemed to create any new right of action in favor of third parties against the Contractor or the City.

ARTICLE 3.05 PRESERVATION OF PROPERTY

The Contractor shall preserve from damage all property along the line of the work, or which is in the vicinity of or is in anywise affected by the work, the removal or destruction of which is not called for by the Plans. This applies, but is not limited, to the public utilities, trees, lawn areas, building monuments, fences, pipe and underground structures, public streets (except natural wear and tear of streets resulting from legitimate use thereof by the Contractor), and wherever such property is damaged due to the activities of the Contractor, it shall be immediately restored to its original condition by the Contractor and at his own expense.

In case of failure on the part of the Contractor to restore such property, or make good such damage or injury, the City may, upon forty-eight (48) hour written notice, proceed to repair, rebuild, or otherwise restore such property as may be deemed necessary, and the cost thereof will be deducted from any monies due or which may become due the Contractor under this Contract. Nothing in this clause shall prevent the Contractor from receiving proper compensation for the removal, damage, or replacement of any public or private property not shown on the Plans, when this is made necessary by alteration of grade or alignment authorized by the Engineer, provided that such property has not been damaged through fault of the Contractor, his employees or agents.

ARTICLE 3.06 BOUNDARIES
The Contractor shall confine his equipment, apparatus, the storage of materials, supplies and apparatus of his workmen to the limits indicated on the plans, by law, ordinances, permits or direction of the Engineer.

ARTICLE 3.07 SAFETY AND HEALTH REGULATIONS
The Contractor shall comply with the Department of Labor Safety and Health Regulations for construction promulgated under the Occupational Safety and Health Act of 1970 (PL 91- 596) and under Section 107 of the Contract Work Hours and Safety Standards Act (PL91-54).

ARTICLE 3.08 TAXES
All taxes of any kind and character payable on account of the work done and materials furnished under this Contract shall be paid by the Contractor and shall be deemed to have been included in his bid. The laws of the State of Florida provide that sales and use taxes are payable by the Contractor upon the tangible personal property incorporated in the work and such taxes shall be paid by the Contractor and shall be deemed to have been included in his bid.

ARTICLE 3.09 ENVIRONMENTAL CONSIDERATIONS
The Contractor, in the performance of the work under this Contract, shall comply with all Local, State and Federal laws, statutes, ordinances, rules and regulations applicable to protection of the environment; and, in the event he violates any of the provisions of same, he shall be answerable to the Local, State and Federal agencies designated by law to protect the environment. In the event the City receives, from any of the environmental agencies, a citation which is occasioned by an act or omission of the Contractor or his subcontractor or any officers, employees or agents of either, it is understood and agreed that the Contractor shall automatically become a party-respondent under said citation; and the City immediately shall notify the Contractor and provide him with a copy of said citation.

The Contractor shall comply with the requirements of the citation and correct the offending conditions(s) within the time stated in said citation and further shall be held fully responsible for all fines and/or penalties.

SECTION 4
TIME PROVISIONS

ARTICLE 4.01 TIME OF START AND COMPLETION
The Contractor must commence work within thirty (30) days subsequent to the date of the receipt of the "Notice to Proceed" by the City unless otherwise provided in the Specific Provisions and Special Instructions. Time being of the essence of this Contract, the Contractor shall thereafter prosecute the work diligently, using such means and methods of construction as well as secure its full completion in accordance with the requirements of the Contract Documents no later than the date specified therefor, or on the date to which the time for completion may be extended.

The Contractor must complete the work covered by this Contract in the number of consecutive calendar days set forth in the Instructions to Bidders, unless the date of completion is extended pursuant to the provisions of Article 4.05 hereof. The period for performance shall start from the date of signing of this Agreement by the City.

The actual date of completion will be established after a final inspection as provided in Article 4.07 hereof.

ARTICLE 4.02 PROGRESS SCHEDULE
To enable the work to be laid out and prosecuted in an orderly and expeditious manner, the Contractor shall submit to the Engineer a proposed progress schedule within fifteen (15) days after the award of this Contract.

The schedule shall state the Contract starting date, time for completion and date of completion and shall show the anticipated time of starting and completion of each of the various operations to be performed under this Contract, together with all necessary and appropriate information regarding sequence and correlation of work and an estimated time required for the delivery of all materials and equipment required for the work. The proposed schedule shall be revised as directed by the Engineer until finally approved by him, and, after such approval, shall be strictly adhered to by the Contractor. The approved progress schedule may be changed only with the written permission of the Engineer.

If the Contractor shall fail to adhere to the approved progress schedule or the schedule as revised, he shall promptly adopt such other or additional means and methods of construction as will make up for the time lost, and will assure completion in accordance with the contract time.

ARTICLE 4.03 APPROVAL REQUESTS
From time to time, as the work progresses and in the sequence indicated by the approved schedule, the Contractor must submit to the Engineer a specific request, in writing, for each item of information or approval required of him by the Contract. These requests must be submitted sufficiently in advance of the date upon which the information or approval is actually required by the Contractor to allow for the time the Engineer may take to act upon such submissions or resubmissions. The Contractor shall not have any right to an extension of time on account of delays due to his failure to submit his requests for the required information or the required approval in accordance with these requirements.

ARTICLE 4.04 COORDINATION WITH OTHER CONTRACTORS
During progress of the work, other Contractors may be engaged in performing other work on this project or on other projects on the site. In that event, the Contractor shall coordinate the work to be done hereunder with the work of such other Contractors in such manner as the Engineer may direct.

ARTICLE 4.05 EXTENSION OF TIME
If such an application is made, the Contractor shall be entitled to an extension of time for delay in completion of the work should the Contractor be obstructed or delayed in the commencement, prosecution or completion of any part of said work by any act or delay of the City, or by acts or omissions of other Contractors on this project, or by a riot, insurrection, war, pestilence, acts of public authorities, fire, lightning, hurricanes, earthquakes, tornadoes, floods, extremely abnormal and excessive inclement weather as indicated by the records of the local weather bureau for a five-year period preceding the date of the Contract, or by strikes, or other causes, which causes of delay mentioned in this Article, in the opinion of the City, are entirely beyond the expectation and control of the Contractor.

The Contractor shall, however, be entitled to an extension of time for such causes only for the number of days of delay which the City may determine to be due solely to such causes and only to the extent that such occurrences actually delay the completion of the project and then only if the Contractor shall have strictly complied with all of the requirements of Articles 4.01, 4.02, 4.03 and 4.04 hereof. It is hereby understood that the determination by the Engineer as to the order and sequence of the work shall not in itself constitute a basis for extension of time.

The determination made by the City on an application for an extension of time shall be binding and conclusive on the Contractor.

Delays caused by failure of the Contractor's materialmen, manufacturers, and dealers to furnish approved working drawings, materials, fixtures, equipment, appliances, or other fittings on time or failure of subcontractors to perform their work shall not constitute a basis of extension of time.

The Contractor agrees to make no claim for damages for delay in the performance of this Contract occasioned by any act or omission to act of the City or any of its representatives or because of any injunction which may be brought against the City or its representatives and agrees that any such claim shall be fully compensated for by an extension of time to complete performance of the work as provided herein.

ARTICLE 4.06 LIQUIDATED DAMAGES
It is mutually agreed between the parties that time is the essence of this Contract and that there will be on the part of the City considerable monetary damage in the event the Contractor should fail to complete the work within the time fixed for completion in the Contract or within the time to which such completion may have been extended.

The amount per day set forth in the Instructions to Bidders is hereby agreed upon as the liquidated damages for each and every calendar day that the time consumed in completing the work under this Contract exceeds the time allowed.

This amount shall, in no event, be considered as a penalty or otherwise than as the liquidated and adjusted damages to the City because of the delay and the Contractor and his Surety agree that the stated sum per day for each such day of delay shall be deducted and retained out of the monies which may become due hereunder and if not so deductible, the Contractor and his Surety shall be liable therefor.

ARTICLE 4.07 FINAL INSPECTION
When the work has been completed in accordance with the requirements of the Contract and final cleaning up performed, a date for final inspection of the work by the Engineer shall be set by the Contractor in a written request therefor, which date shall be not less than ten (10) days after the date of such request. The work will be deemed complete as of the date so set by the Contractor if, upon such inspection, the Engineer determines that no further work remains to be done at the site.

If such inspection reveals interms of work still to be performed, however, the Contractor shall promptly perform them and then request a reinspection. If, upon such inspection, the Engineer determines that the work is complete, the date of final completion shall be deemed to be the last day of such reinspection.

SECTION 5
SUBCONTRACTS AND ASSIGNMENTS

ARTICLE 5.01 LIMITATIONS AND CONSENT
The Contractor shall not assign, transfer, convey, sublet or otherwise dispose of this Contract or of his right, title, or interest therein, or his power to execute such Contract, or to assign any monies due or to become due thereunder to any other person, firm or corporation unless the previous written consent of the City shall first be obtained thereto and the giving of any such consent to a particular subcontract or assignment shall not dispense with the necessity of such consent to any further or other assignment.

Before making any subcontract, the Contractor must submit a

written statement to the Engineer, giving the name and address of the proposed contractor, the portion of the work and materials which he is to perform and furnish and any other information tending to prove that the proposed subcontractor has the necessary facilities, skill, integrity, past experience and financial resources to perform the work in accordance with the terms and conditions of this Contract.

If the City finds that the proposed subcontractor is qualified, the Contractor will be notified in writing. The City may revoke approval of any subcontractor when such subcontractor evidences an unwillingness or inability to perform his work in strict accordance with these Contract Documents. Notice of such revocation of approval will be given in writing to the Contractor.

The Contractor will promptly, upon request, file with the City a conformed copy of the subcontract. The Contractor shall cause appropriate provisions to be inserted in all subcontracts relative to the work to bind subcontractors to the Contractor by the terms of these Contract Documents, insofar as applicable to the work of subcontractors, and to give the Contractor the same power as regards terminating any subcontracts that the City may exercise over the Contractor under provisions of these Contract Documents.

The Contractor shall be required to perform with his own forces at least twenty-five (25) percent of the work, unless written consent to subcontract a greater percentage of the work is first obtained from the City.

ARTICLE 5.02 RESPONSIBILITY
The approval by the City of a subcontractor shall not relieve the Contractor of any of his responsibilities, duties, and liabilities hereunder. The Contractor shall be solely responsible to the City for the acts or defaults or omissions of his subcontractor and of such subcontractor's officers, agents, and employees, each of whom shall for all purposes be deemed to be the agent or employee of the Contractor. Nothing contained in the Contract Documents shall create any contractual relationship between any subcontractor and the City.

SECTION 6
SECURITY AND GUARANTY

ARTICLE 6.01 CONTRACT SECURITY
The Contractor shall execute and deliver to the City a Performance Bond on the form as provided herein, in an amount at least equal to one hundred (100) percent of the full Contract price, such Bond to be executed by a surety company acceptable to the City. The surety on such Performance Bond shall be a surety company duly authorized to do business in the State of Florida, and the Bond shall be issued or countersigned by a local resident producing agent of such surety company who is a resident of the State of Florida, regularly commissioned and licensed in said State, and satisfactory evidence of the authority of the person or persons executing such Bond shall be submitted with the Bond. The Performance Bond shall serve as security for the faithful performance of this Contract, including maintenance and guaranty provisions, and for the payment of all persons performing labor and furnishing materials in connection with the Contract. The premiums on the Performance Bond shall be paid by the Contractor.

If, at any time, the City shall become dissatisfied with any surety or sureties then upon the Performance Bond, or if for any other reason such bond shall cease to be adequate security for the City, the Contractor shall, within five days after notice so to do, substitute an acceptable Bond in such form and sum and signed by such other sureties as may be satisfactory to the City. The premiums on such Bond shall be paid by the Contractor. No further partial payments shall be deemed due or shall be made until the new sureties have qualified.

ARTICLE 6.02 CONTRACTORS INSURANCE
Insurance required shall be as indicated on Special Instructions pages beginning with "INS-1"

ARTICLE 6.03 AGAINST CLAIMS AND LIENS
The City may withhold from the Contractor as much as any approved payments to him as may, in the opinion of the City, be necessary to secure (a) just claims of any persons supplying labor or materials to the Contractor or any of his subcontractors for the work then due and unpaid; (b) loss due to defective work not remedied, or (c) liability, damage, or loss due to injury to persons or damages to the work or property of other contractors, subcontractors, or others, caused by the act or neglect of the Contractor or of any of his subcontractors. The City shall have the right, as agent for the Contractor, to apply any such amounts so withheld in such manner as the City may deem proper to satisfy such claims or to secure such protection. Such application of such money shall be deemed payments for the account of the Contractor.

ARTICLE 6.04 MAINTENANCE AND GUARANTY
The Contractor hereby guarantees all the work furnished under this Contract against any defects in workmanship and materials for a period of one year following the date of final acceptance of the work by the City. Under this guarantee, the Contractor hereby agrees to make good, without delay, at his own expense, any failure of any part of the work due to faulty materials or manufacture, construction, or installation, or the failure of any equipment to perform satisfactorily all the work put upon it within the limits of the Contract Documents, and further, shall make good any damage to any part of the work caused by such failure. It is hereby agreed that the Performance Bond shall fully cover all guarantees contained in this Article.
It is also agreed that all warranties, expressed or implied, inure to the benefit of the City and are enforceable by the City.

SECTION 7
CHANGES

ARTICLE 7.01 MINOR CHANGES
The City reserves the right to make such additions, deductions, or changes to this Contract from time to time as

it deems necessary and in a manner not materially affecting the substance thereof or materially changing the price to be paid in order to carry out and complete more fully and perfectly the work herein agreed to be done and performed. This Contract shall in no way be invalidated by any such additions, deductions, or changes, and no claim by the Contractor shall be made for any loss of anticipated profits thereby.

Construction conditions may require that minor changes be made in the location and installation of the work and equipment to be furnished and other work to be performed hereunder, and the Contractor when ordered by the Engineer, shall make such adjustments and changes in said locations and work as may be necessary, without additional cost to the City, provided such adjustments and changes do not alter the character, quantity of cost of the work as a whole, and provided further that Plans and Specifications showing such adjustments and changes are furnished to the Contractor by the City within a reasonable time before any work involving such adjustment and changes is begun. The Engineer shall be the sole judge of what constitutes a minor change for which no additional compensation shall be allowed.

ARTICLE 7.02 EXTRA WORK

The City may at any time by a written order and without notice to the sureties require the performance of such extra work as it may find necessary or desirable. An order for extra work shall be valid only if issued in writing and signed by the Mayor and the work so ordered must be performed by the Contractor.

The amount of compensation to be paid to the Contractor for any extra work as so ordered shall be determined as follows:

(a)By such applicable unit prices, if any, as are set forth in the Proposal; or

(b)If no such unit prices are set forth then by a lump sum or other unit prices mutually agreed upon by the City and the Contractor; or

(c)If no such unit prices are set forth in the Proposal and if the parties cannot agree upon a lump sum or other unit prices then by the actual net cost in money to the Contractor of the extra work performed, which cost shall be determined as follows:

(1) For all labor and foreman in direct charge of the authorized operations, the Contractor shall receive the current local rate of wages to be agreed upon, in writing, before starting such work for each hour that said labor and foremen are actually engaged thereon, to which shall be added an amount equal to 25 percent of the sum thereof which shall be considered and accepted as full compensation for general supervision, FICA taxes, contributions under the Florida Unemployment Compensation Act, insurance, bond, subcontractor's profit and overhead, the furnishing of small tools and miscellaneous equipment used, such as picks, shovels, hand pumps, and similar items.

(2) For all materials used, the Contractor shall receive the actual cost of such materials delivered at the site or previously approved delivery point as established by original receipted bills. No percentage shall be added to this cost.

(3) For special equipment and machinery such as power-driven pumps, concrete mixers, trucks, and tractors, or other equipment, required for the economical performance of the authorized work, the Contractor shall receive payment based on the average local area rental price for each item of equipment and the actual time of its use on the work. No percentage shall be added to this sum.

(4) Records of extra work done under this procedure shall be reviewed at the end of each day by the Contractor or his representative and the Engineer. Duplicate copies of accepted records shall be made and signed by both Contractor or his representative and the Engineer, and one copy retained by each.

Request for payment for approved and duly authorized extra work shall be submitted in the same form as Contract work or in the case of work performed under paragraph (c) (1) above upon a certified statement supported by receipted bills. Such statement shall be submitted for the current Contract payment for the month in which the work was done.

ARTICLE 7.03 DISPUTED WORK

If the Contractor is of the opinion that any work required, necessitated, or ordered violates the terms and provisions of this Contract, he must promptly notify the Engineer, in writing, of his contentions with respect thereto and request a final determination thereof. If the Engineer determines that the work in question is Contract work and not extra work or that the order complained of is proper, he will direct the Contractor to proceed and the Contractor shall promptly comply. In order, however, to reserve his right to claim compensation for such work or damages resulting from such compliance, the Contractor must, within five (5) days after receiving notice of the Engineer's determination and direction, notify the City in writing that the work is being performed or that the determination and direction is being complied with under protest. Failure of the Contractor to notify shall be deemed as a waiver of claim for extra compensation or damages therefor.

Before final acceptance by the City, all matters of dispute must be adjusted to the mutual satisfaction of the parties thereto. Final determinations and decisions, in case any questions shall arise, shall constitute a condition precedent to the right of the Contractor to receive the money therefor until the matter in question has been adjusted.

ARTICLE 7.04 OMITTED WORK

The City may at any time by a written order and without notice to the sureties require the omission of such Contract work as it may find necessary or desirable.

An order for omission of work shall be valid only if signed by the Mayor and the work so ordered must be omitted by the Contractor. The amount by which the Contract price shall be reduced shall be determined as follows:

(a) By such applicable unit prices, if any, as are set forth in the Contract; or

(b) By the appropriate lump sum price set forth in the Contract; or

(c) By the fair and reasonable estimated cost to the City

of such omitted work as determined by the Engineer and approved by the City.

SECTION 8
CONTRACTOR'S EMPLOYEES

ARTICLE 8.01 CHARACTER AND COMPETENCY

The Contractor and his subcontractors shall employ upon all parts of the work herein contracted for only competent, skillful, and trustworthy workers. Should the Engineer at any time give notice, in writing, to the Contractor or his duly authorized representative on the work that any employee in his opinion is incompetent, unfaithful, disorderly, careless, unobservant of instructions, or in any way a detriment to the satisfactory progress of the work, such employee shall immediately be dismissed and not again allowed upon the site.

ARTICLE 8.02 SUPERINTENDENCE

The Contractor shall give his personal supervision to the faithful prosecution of the work and in case of his absence shall have a competent, experienced, and reliable supervisor or superintendent, acceptable to the Engineer on the site who shall follow without delay all instructions of the Engineer in the prosecution and completion of the work and every part thereof, in full authority to supply workers, material, and equipment immediately. He shall keep on hand at all times copies of the Contract Documents.

ARTICLE 8.03 EMPLOYMENT OPPORTUNITIES

The Contractor shall, in the performance of the work required to be done under this Contract, employ all workers without discrimination regarding race, creed, color, sex or national origin and must not maintain or provide facilities that are segregated on the basis of race, color, creed or national origin.

ARTICLE 8.04 RATES OF WAGES

On federally assisted projects, the rates of wages to be paid under this Contract shall not be less than the rates of wages set forth in Section 12 of this Agreement.

On other projects, no wage rate determination is included. Florida's Prevailing Wage Law (Section 215.19, Florida Statutes) was repealed effective April 25, 1979.

ARTICLE 8.05 PAYROLL REPORTS

The Contractor and each subcontractor shall, if requested to do so, furnish to the Engineer a duly certified copy of his payroll and also any other information required by the Engineer to satisfy him that the provisions of the law as to the hours of employment and rate of wages are being observed.

Payrolls shall be prepared in accordance with instructions furnished by the City and on approved forms. The Contractor shall not carry on his payroll any persons not employed by him. Subcontractor's employees shall be carried only on the payrolls of the employing subcontractor.

SECTION 9
CONTRACTOR'S DEFAULT

ARTICLE 9.01 CITY'S RIGHT AND NOTICE

It is mutually agreed that: (a) if the Contractor fails to begin work when required to do so, or (b) if at any time during the progress of the work it shall appear to the Engineer that the Contractor is not prosecuting the work with reasonable speed, or is delaying the work unreasonably and unnecessarily, or (c) if the force of workmen or quality or quantity of material furnished are not sufficient to insure completion of the work within the specified time and in accordance with the Specifications hereto attached, or (d) if the Contractor shall fail to make prompt payments for materials or labor or to subcontractors for work performed under the Contract, or (e) if legal proceedings have been instituted by others than the City in such manner as to interfere with the progress of the work and may subject the City to peril of litigation or outside claims of (f) if the Contractor shall be adjudged a bankrupt or make an assignment for the benefit of creditors, or (g) if in any proceeding instituted by or against the Contractor an order shall be made or entered granting an extension of time of payment, composition, adjustment, modification, settlement or satisfaction of his debts or liabilities, or (h) if a receiver or trustee shall be appointed for the Contractor or the Contractor's property, or (i) if the Contract or any part thereof shall be sublet without the consent of the City being first obtained in writing, or (j) if this Contract or any right, monies, or claim thereunder shall be assigned by the Contractor, otherwise than as herein specified, or (k) if the Contractor shall fail in any manner of substance to observe the provisions of this Contract, or (l) if any of the work, machinery, or equipment shall be defective, and shall not be replaced as herein provided, or (m) if the work to be done under this Contract shall be abandoned, then such fact or conditions shall be certified by the Engineer and thereupon the City without prejudice to any other rights or remedies of the City, shall have the right to declare the Contractor in default and so notify the Contractor by a written notice, setting forth the ground or grounds upon which such default is declared and the Contractor must discontinue the work, either as a portion of the work or the whole thereof, as directed.

ARTICLE 9.02 CONTRACTOR'S DUTY UPON DEFAULT

Upon receipt of notice that his Contract is in default, the Contractor shall immediately discontinue all further operations on the work or such part thereof, and shall immediately quit the site or such part thereof, leaving untouched all plant, materials, equipment, tools, and supplies.

ARTICLE 9.03 COMPLETION OF DEFAULTED WORK

The City, after declaring the Contractor in default, may then have the work completed or the defective equipment or machinery replaced or anything else done to complete the work in strict accordance with the Contract Documents by such means and in such manner, by Contract with or without public letting, or otherwise, as it may deem advisable,

utilizing for such purpose without additional cost to the City such of the Contractor's plant, materials, equipment, tools, and supplies remaining on the site, and also such subcontractors as it may deem advisable.

The City shall reimburse all parties, including itself, for the expense of such completion, including liquidated damages, if any, and the cost of reletting. The City shall deduct this expense from monies due or to become due to the Contractor under this Contract, or any part thereof, and in case such expense is more than the sum remaining unpaid of the original contract price, the Contractor and his sureties shall pay the amount of such deficiency to the City.

ARTICLE 9.04 PARTIAL DEFAULT
In case the City shall declare the Contractor in default as to a part of the work only, the Contractor shall discontinue such part, shall continue performing the remainder of the work in strict conformity with the terms of the Contract, and shall in no way hinder or interfere with any other contractor or person whom the City may engage to complete the work as to which the Contractor was declared in default.

SECTION 10
PAYMENTS

ARTICLE 10.01 PRICES
For the Contractor's complete performance of the work, the City will pay and the Contractor agrees to accept, subject to the terms and conditions hereof, the lump sum prices or unit prices in the Contractor's Proposal and the award made therein, plus the amount required to be paid for any extra work ordered under Article 7.02 hereof, less credit for any work omitted pursuant to Article 7.04 hereof. Under unit price items, the number of units actually required to complete the work under the Contract may be more than stated in the Proposal. The Contractor agrees that no claim will be made for any damages or for loss of profits because of a difference between the quantities of the various classes of work assumed and stated in the Proposal Form as a basis for comparing Proposals and the quantities of work actually performed.

The sum as awarded for any lump sum Contract or lump sum Contract Item shall represent payment in full for all of the various classes of work, including materials, equipment, and labor necessary or required to complete, in conformity with the Contract Document, the entire work shown, indicated or specified under the lump sum Contract or lump sum Contract Item.

The amount as awarded as a unit price for any unit price Contact Item shall represent payment in full for all the materials, equipment, and labor necessary to complete, in conformity with the Contract Documents, each unit of work shown, specified, or required under the said unit price Contract Item.

No payment other than the amount as awarded will be made for any class of work included in a lump sum Contract Item or a unit price Contract Item, unless specific provision is made therefor in the Contract Documents.

ARTICLE 10.02 SUBMISSION OF BID BREAKDOWN
Within fifteen (15) days after the execution of this Contract, the Contractor must submit to the Engineer in duplicate an acceptable breakdown of the lump sums and unit prices bid for items of the Contract, showing the various operations to be performed under the Contract, as described in the progress schedule required under Article 4.02 hereof, and the value of each of such operations, the total of such items to equal the total price bid. The Contractor shall also submit such other information relating to the bid prices as may be required and shall revise the bid breakdown as directed. Thereafter, the breakdown may be used for checking the Contractor's applications for partial payments hereunder but shall not be binding upon the City or the Engineer for any purpose whatsoever.

ARTICLE 10.03 REPORTS, RECORDS AND DATA
The Contractor shall furnish to the Engineer such schedules of quantities and costs, progress schedules, reports, invoices, delivery tickets, estimates, records, and other data as the Engineer may request concerning work performed or to be performed and the materials furnished under the Contract.

ARTICLE 10.04 PAYMENTS BY CONTRACTOR
The Contractor shall pay (a) for all transportation and utility services not later than the 20th day of the calendar month following that in which such services are rendered, (b) for all materials, tools, and equipment delivered at the site of the project, and the balance of the cost thereof not later than the 30th day following the completion of that part of the work in or on which such materials, tools, and equipment are incorporated or used, and (c) to each of his subcontractors, not later than the 5th day following each payment to the Contractor, the respective amounts allowed the Contractor on account of the work performed by his subcontractors, to the extent of each subcontractor's interest therein; and proof of such payments or releases therefor shall be submitted to the Engineer upon request.

ARTICLE 10.05 PARTIAL PAYMENTS
On or about the first of each month, the Contractor shall make and certify an estimate, on forms prescribed by the City, of the amount and fair value of the work done, and may apply for partial payment therefor. The Contractor shall revise the estimate as the Engineer may direct. When satisfactory progress has been made, and shows that the value of the work completed since the last payment exceeds one percent (1%) of the total Contract price in amount, the Engineer will issue a certificate that such work has been completed and the value thereof. The City will then issue a voucher to the Contractor in accordance with the following schedule:

FOR CONTRACT AMOUNTS UNDER $250,000
(A)In the amount of ninety percent (90%) of the value of the work completed as certified until construction is one hundred percent (100%) complete (operational or beneficial occupancy), the withheld amount may be reduced below ten percent (10%), at the Engineer's option, to only that amount necessary to assure completion.

FOR CONTRACT AMOUNTS OVER $250,000

(A)In the amount of ninety percent (90%) of the value of the work completed as certified until construction is fifty percent (50%) complete.

(B)When the dollar value, as determined by the Engineer, of satisfactorily completed work in place is greater than fifty percent (50%) of the original contract price, vouchers for partial payment will be issued by the City to the Contractor in the amount of one hundred percent (100%) of the value of the work, above 50%, completed as certified for that payment period.

(C)If the Contractor has performed satisfactorily and the work is substantially complete (operational or beneficial occupancy) the withheld amount may be reduced, at the Engineer's option, to only that amount necessary to assure completion.

In addition to the Conditions set forth in (A), (B), and (C) above, payments will always be less any sums that may be retained or deducted by the City under the terms of any of the contract documents and less any sums that may be retained to cover monetary guarantees for equipment, materials or progress performance.

Payment on estimates made on or about the first of the month may be expected on or about the 20th of the month.

Unless specified otherwise in the Contract Items, the delivered cost of equipment and nonperishable materials suitably stored at the site of the work and tested for adequacy may be included in the Contractor's application for partial payment provided, however, that the Contractor shall furnish evidence satisfactory to the City that the Contractor is the unconditional owner and in possession of such materials or equipment. The amount to be paid will be 90 percent of the invoice cost to the Contractor which cost shall be supported by receipted bills within 30 days of the date of payment by the City to the Contractor. Such payment shall not relieve the Contractor from full responsibility for completion of the work and for protection of such materials and equipment until incorporated in the work in a permanent manner as required by the Contract Documents.

Before any payment will be made under this Contract, the Contractor and every subcontractor, if required, shall deliver to the Engineer a written, verified statement, in satisfactory form, showing in detail all amounts then due and unpaid by such Contractor or subcontractor to all laborers, workmen, and mechanics, employed by him under the Contract for the performance of the work at the site thereof, for daily or weekly wages, or to other persons for materials, equipment, or supplies delivered at the site of the work during the period covered by the payment under consideration.

ARTICLE 10.06 FINAL PAYMENT

Under determination of satisfactory completion of the work under this Contract as provided in Article 4.07 hereof, the Engineer will prepare the final estimate showing the value of the completed work. This estimate will be prepared within 30 days after the date of completion or as soon thereafter as the necessary measurements and computations can be made. All prior certificates and estimates, being approximate only, are subject to correction in the final estimate and payment.

When the final estimate has been prepared and certified by Engineer, he will submit to the Mayor and City Council the final certificate stating that the work has been completed and the amount based on the final estimate remaining due to the Contractor. The City will then accept the work as fully completed and will, not later than 30 days after the final acceptance, as defined in Article 1.02, of the work done under this Contract, pay the Contractor the entire amount so found due thereunder after deduction of all previous payments and all percentages and amounts to be kept and retained under provisions of this Contract; provided, however, and it is understood and agreed that, as a precedent to receiving final payment, the Contractor shall submit to the City a sworn affidavit that all bills for labor, service, materials, and subcontractors have been paid and that there are no suits pending in connection with this work. The City, at its option, may permit the Contractor to execute a separate surety bond in a form satisfactory to the City. The surety bond shall be in the full amount of the suit or suits.

Neither the final payment nor any part of the retained percentage shall be paid until the Contractor, if required, shall furnish the City with a complete release from any should remain unsatisfied after all payments are made, the Contractor shall refund to the City all monies which the City may be compelled to pay in discharging such claim, including incidental costs and attorney's fees.

ARTICLE 10.07 ACCEPTANCE OF FINAL PAYMENT

The acceptance by the Contractor, or by anyone claiming by or through him, of the final payment shall operate as and shall be a release to the City and every officer and agent thereof from any and all claims and liability to the Contractor for anything done or furnished in connection with the work or project and for any act or neglect of the Contractor or of any others relating to or affecting the work. No payment, however, final or otherwise, shall operate to release the Contractor or his sureties from any obligations under this Contract or the Performance Bond.

SECTION 11
MISCELLANEOUS PROVISIONS

ARTICLE 11.01 CONTRACTOR'S WARRANTIES

In consideration of, and to induce the award of this contract to him, the Contractor represents and warrants:

(a)That he is not in arrears to the City upon debt or contract, and he is not a defaulter, as surety, contractor, or otherwise.

(b)That he is financially solvent and sufficiently experienced and competent to perform the work.

(c)That the work can be performed as called for by the Contract Documents.

(d)That the facts stated in his proposal and the information given by him are true and correct in all respects.

(e)That he is fully informed regarding all the conditions affecting the work to be done and labor and materials to be

furnished for the completion of this Contract, and that his information was secured by personal investigation and research.

ARTICLE 11.02 PATENTED DEVICES, MATERIAL AND PROCESSES

It is mutually understood and agreed that Contract prices include all royalties and costs arising from patents, trademarks, and copyrights in any way involved in the work. Whenever the Contractor is required or desires to use any design, device, material, or process covered by letters of patent or copyright, the Contractor shall indemnify and save harmless the City, its officers, agents and employees from any and all claims for infringement by reason of the use of any such patented design, device, tool, material, equipment, or process, to be performed under the Contract, and shall indemnify the said City, its officers, agents, and employees for any costs, expenses, and damages which may be incurred by reason of such infringement at any time during the prosecution or after completion of the work.

ARTICLE 11.03 SUITS AT LAW

In case any action at law or suit in equity may or shall be brought against the City or any of its officers, agents, or employees for or on account of the failure, omission, or neglect of the Contractor or his subcontractors, employees, or agents, to do or perform any of the covenants, acts, matters, or things by this Contract undertaken to be done or performed by the Contractor of his subcontractors, employees, or agents, or from any injuries done to property or persons and caused by the negligence or alleged negligence of the Contractor of his subcontractors, employees, or agents, or in any other manner arising out of the performance of this Contract, then the Contractor shall immediately assume and take charge of the defense of such actions or suits in like manner and to all intents and purposes as if said actions or suits have been brought directly against the Contractor, and the Contractor shall also indemnity and save harmless the City, its officers, agents, and employees from any and all loss, cost or damage whatever arising out of such actions or suits, in like manner and to all intents and purposes as if said actions or suits have been brought directly against the Contractor.

The Contractor shall and does hereby assume all liability for and agrees to indemnify the City or its Engineer against any or all loss, costs, damages, and liability for any or by reason of any lien, claims or demands, either for materials purchased or for work performed by laborers, mechanics, and others and from any damages, costs, actions, or causes of action and judgement arising from injuries sustained by mechanics, laborers, or other persons by reason of accidents or otherwise, whether caused by the carelessness or inefficiency or neglect of said Contractor, his subcontractors, agents, employees, workmen or otherwise.

ARTICLE 11.04 CLAIMS FOR DAMAGES

If the Contractor shall claim compensation for any damage sustained, other than for extra or disputed work covered by Article 7.02 and 7.03 hereof, by reason of any act or omission of the City, its agents, or any persons, he shall, within five days after sustaining such damage, make and deliver to the Engineer a written statement of the nature of the damage sustained and of the basis of the claim against the City. On or before the 15th of the month succeeding that in which any damage shall have been sustained, the Contractor shall make and deliver to the Engineer an itemized statement of the details and amounts of such damage, duly verified by the Contractor. Unless such statements shall be made delivered within the times aforesaid, it is stipulated that and all claims for such compensation shall be forfeited and invalidated, and the Contractor shall not be entitled to payment on account of such claims.

ARTICLE 11.05 NO CLAIMS AGAINST INDIVIDUALS

No claim whatsoever shall be made by the Contractor against any officer, agent, employee of the City for, or on account of, anything done or omitted to be done in connection with this Contract.

ARTICLE 11.06 LIABILITY UNAFFECTED

Nothing herein contained shall in any manner create any liability against the City on behalf of any claim for labor, services, or materials, or of subcontractors, and nothing herein contained shall affect the liability of the Contractor or his sureties to the City or to any workmen or materialsmen upon bond given in connection with this Contract.

ARTICLE 11.07 INDEMNIFICATION PROVISIONS

Whenever there appears in this Agreement, or in the other Contact Documents made a part hereof, an indemnification provision within the purview of Chapter 725.06, Laws of Florida, the monetary limitation on the extent of the indemnification under each such provision shall be One Million Dollars or a sum equal to the total Contract price, whichever shall be the greater.

ARTICLE 11.08 UNLAWFUL PROVISIONS DEEMED STRICKEN

If this contract contains any unlawful provisions not an essential part of the Contract and which shall not appear to have a controlling or material inducement to the making thereof, such provisions shall be deemed of no effect and shall, upon notice by either party, be deemed stricken from the Contract without affecting the binding force of the remainder.

ARTICLE 11.09 LEGAL PROVISIONS DEEMED INCLUDED

Each and every provision of any law and clause required by law to be inserted in this Contract shall be deemed to be inserted herein, and the Contract shall be read and enforced as though it were included herein and if, through mistake or otherwise, any such provision is not inserted or is not correctly inserted, then upon application of either party the Contract shall forthwith be physically amended to make such insertion.

ARTICLE 11.10 DEATH OR INCOMPETENCY OF CONTRACTOR

In the event of death or legal incompetency of a Contractor who shall be an individual or surviving member of a contracting firm, such death or adjudication of incompetency

shall not terminate the Contract, but shall act as default hereunder to the effect provided in Article 9.01 hereof and the estate of the Contractor and his surety shall remain liable hereunder to the same extent as though the Contractor had lived. Notice of default, as provided in Article 9.01 hereof, shall not be required to be given in the event of such death or adjudication of incompetency.

ARTICLE 11.11 NUMBER AND GENDER OF WORDS
Whenever the context so admits or requires, all references herein in one number shall be deemed extended to and including the other number, whether singular or plural, and the use of any gender shall be applicable to all genders.

ARTICLE 11.12 ACCESS TO RECORDS
Representatives of Federal Agencies, if applicable, and the State of Florida shall have access to the work whenever it is in preparation of progress. On federally assisted projects the Federal Agency, the Comptroller General of the United States, or any authorized representative shall have access to any books, documents, papers, and records of the Contractor which are pertinent to the project for the purpose of making audit, examination, excerpts, and transcription thereof.

SECTION 12
LABOR STANDARDS

ARTICLE 12.01 LABOR STANDARDS
The Contractor shall comply with all of the regulations set forth in "Labor Standards Provisions for Federally Assisted Construction Contracts", which may be attached, and any applicable Florida Statutes.

ARTICLE 12.02 NOTICE TO LABOR UNIONS
If required, the Contractor shall provide Labor Unions and other organizations of workers, and shall post, in a conspicuous place available to employees or applicants for employment, a completed copy of the form entitled "Notice to Labor Unions or Other Organizations of Workers" attached to and made a part of this Agreement.

ARTICLE 12.03 SAFETY AND HEALTH REGULATIONS
The Contractor shall comply with the Department of Labor Safety and Health Regulations for construction promulgated under the Occupational Safety and Health Act of 1970 (PL 91- 596) and under Section 107 of the Contract Work Hours and Safety Standards Act (PL 91-54). Nothing in these Acts shall be construed to supersede or in any manner affect any worker's compensation law or statutory rights, duties, or liabilities of employers and employees under any law with respect to injuries, diseases, or death of employees arising out of, or in the course of, employment.

ARTICLE 12.04 EEO AFFIRMATIVE ACTION REQUIREMENTS
The Contractor understands and agrees to be bound by the equal opportunity requirements of Federal regulations which shall be applicable throughout the performance of work under this Contract. The Contractor also agrees to similarly bind contractually each subcontractor. In policies, the Contractor agrees to engage in Affirmative Action directed at promoting and ensuring equal employment opportunity in the work force used under the Contract (and the Contractor agrees to require contractually the same effort of all subcontractors whose subcontractors exceed $100,000). The Contractor understands and agrees that "Affirmative Action" as used herein shall constitute a good faith effort to achieve and maintain minority employment in each trade in the on-site work force used on the Contract.

ARTICLE 12.05 PREVAILING RATES OF WAGES
Florida's prevailing wage law was repealed effective April 25, 1979.

For Federally assisted projects, appropriate prevailing wage rate determinations are indicated on pages beginning with WR-1.

* * * * * * *

IN WITNESS THEREOF, the parties have hereunto set their hands and seals, and such of them as are corporation have caused these present to be signed by their duly authorized officers.

CITY OF TAMPA, FLORIDA

_____
Jane Castor, Mayor
(SEAL)

ATTEST:

_____
City Clerk

Approved as to Form:
The execution of this document was authorized
by Resolution No. _____

_____
Justin R. Vaske, Assistant City Attorney

Contractor

By:_____
(SEAL)

Title:

ATTEST:

_____
Witness

TAMPA AGREEMENT (ACKNOWLEDGMENT OF PRINCIPAL)

STATE OF)
) SS:
COUNTY OF)

For a Corporation:

STATE OF _____
COUNTY OF _____

The foregoing instrument was acknowledged before me this ___ of _____, 20___ by _____ of _____, a _____ corporation, on behalf of the corporation. He/she is ___ personally known or has ___ produced _____ as identification.

_____
Notary

My Commission Expires:

_____

For an Individual:

STATE OF _____
COUNTY OF _____

The foregoing instrument was acknowledged before me this ___ of _____, 20___ by _____ who is ___ personally known to me or has ___ produced _____ as identification.

_____
Notary

My Commission Expires:

_____

For a Firm:

STATE OF _____
COUNTY OF _____

The foregoing instrument was acknowledged before me this ___ of _____, 20___ by _____ who signed on behalf of the said firm. He/she is ___ personally known or has ___ produced _____ as identification.

_____
Notary

My Commission Expires:

_____

_____

PUBLIC CONSTRUCTION BOND

Bond No. (enter bond number)_____

Name of Contractor:_____

Principal Business Address of Contractor:_____

_____

Telephone Number of Contractor:_____

Name of Surety (if more than one list each):_____

_____

Principal Business Address of Surety:_____

_____

Telephone Number of Surety:_____

Owner is The City of Tampa, Florida

Principal Business Address of Owner: 306 E Jackson St, Tampa, FL 33602

Contract Administration Department (280A4N)

Telephone Number of Owner: 813/274-8456

Contract Number Assigned by City to contract which is the subject of this bond:_____

Legal Description or Address of Property Improved or Contract Number is:_____

_____

_____

_____

General Description of Work and Services:_____

_____

_____

_____

Revised 2019 09/18

KNOW ALL MEN BY THESE PRESENTS That we, _____

_____
(Name of Contractor)

as Principal, hereinafter called CONTRACTOR, of the State of _____, and

_____(Name of Surety)
a corporation organized and existing under and by virtue of the laws of the State of _____, and regularly authorized to do business in the State of Florida, as SURETY, are held and firmly bound unto the City of Tampa, a municipal corporation organized and existing under the laws of the State of Florida, hereinafter called Owner, in the penal sum of _____Dollars and _____Cents ($_____), lawful money of the United States of America, for the payment whereof well and truly to be made, we bind ourselves, our heirs, executors, and administrators, successors and assigns, jointly and severally, firmly by these presents.

THE CONDITION OF THIS BOND is that if Principal:

1. Performs the contract dated _____, _____, 20___, between Principal and Owner for construction of _____, the contract being made a part of this bond by reference, in the time and in the manner prescribed in the contract; and

2. Promptly makes payments to all claimants, as defined in Section 255.05(1) (Section 713.01), Florida Statutes, supplying Principal with labor, materials, or supplies, used directly or indirectly by Principal in the prosecution of the work provided for in the contract; and

3. Pays Owner all losses, damages, expenses, costs, and attorney's fees, including appellate proceedings, that Owner sustains because of a default by Principal under the contract; and

4. Performs the guarantee of all work and materials furnished under the contract for the time specified in the contract, then this bond is void; otherwise it remains in full force.

5. Contractor and Surety acknowledge that the Work for which this bond has been issued may be one of several such contract documents for a group of projects. This bond does not secure covenants to pay for or to perform design services survey or program management services. The Owner/Obligee is expected to reasonably account for damages that are caused to Owner with respect to Principal's (Contractor's) default in performance of the scope of the Work incorporated by reference into the bond, and notwithstanding any contractual or common law remedy permitted to Owner as against Contractor, the obligation of Surety for any damages under this bond shall be determined by the cost of completion of the Work less the contract balance unpaid upon default of Contractor for the Work plus liquidated damages at the rate of $500.00 per day for delays by the Contractor and/or Surety in reaching substantial completion.

6. The notice requirements for claimants and conditions for entitlement to payment set forth in Section 255.05, Fla. Stat. and the limitations period to actions upon Section 255.05, Fla. Stat. bonds apply to claimants seeking payment from surety under this bond. Any action instituted by a claimant under this bond for payment must be in accordance with the notice and time limitation provisions in Section 255.05, Florida Statutes.

7. The Surety, for value received, hereby stipulates and agrees that no changes, extensions of time, alterations or additions to the terms of the contract documents or other Work to be performed hereunder, or the specifications referred to therein shall in any way affect its obligations under this bond, and it does hereby waive notice of any such changes, extensions of time, alterations or additions to the terms of the Contract or to Work or to the specifications.

8. The above SURETY states that it has read all of the Contract Documents made by the CONTRACTOR with the CITY, hereto attached, and the terms and conditions of the contract and work, and is familiar therewith and in particular those portions of the Agreement concerning the guaranty of such CONTRACTOR for a period of one year following the date of the final acceptance of the completed work under the Contract by the CITY, all of which this BOND includes.

DATED ON _____, 20___

_____
(Name of Principal)

_____
(Principal Business Address)

By _____

Title _____

_____
Telephone Number of Principal

_____
(Name of Surety)

_____
(Surety Address)

By _____
(As Attorney in Fact)*

_____
Telephone Number of Surety

Approved as to legal sufficiency:

By _____
Assistant City Attorney

Countersignature:

_____
(Name of Local Agency)

_____
(Address of Resident Agent)

By _____

Title _____

_____
Telephone Number of Local Agency

*(As Attorney in Fact) attach Power of Attorney and Current Certificate with Original Signature

SPECIFICATIONS
GENERAL PROVISIONS

SECTION 1
SCOPE AND INTENT

G-1.01 DESCRIPTION
The work to be done consists of the furnishing of all labor, materials and equipment, and the performance of all work included in this Contract.

G-1.02 WORK INCLUDED
The Contractor shall furnish all labor, superintendence, materials, plant, power, light, heat, fuel, water, tools, appliances, equipment, supplies, and other means of construction necessary or proper for performing and completing the work. He shall obtain and pay for all required permits. He shall perform and complete the work in the manner best calculated to promote rapid construction consistent with safety of life and property and to the satisfaction of the Engineer, and in strict accordance with the Contract Documents. The Contractor shall clean up the work and maintain it during and after construction, until accepted, and shall do all work and pay all costs incidental thereto. He shall repair or restore all structures and property that may be damaged or disturbed during performance of the work.

The cost of incidental work described in these General Provisions, for which there are no specific Contract Items, shall be considered as part of the overhead cost of doing the work and shall be included in the prices for the various Contract Items. No additional payment will be made therefor.

The Contractor shall provide and maintain such modern plant, tools, and equipment as may be necessary, in the opinion of the Engineer, to perform in a satisfactory and acceptable manner all the work required by this Contract. Only equipment of established reputation and proven efficiency shall be used. The Contractor shall be solely responsible for the adequacy of his plant and equipment, prior approval of the Engineer notwithstanding.

G-1.03 PUBLIC UTILITY INSTALLATIONS AND STRUCTURES
Public utility installations and structures shall be understood to include all poles, tracks, pipes, wires, conduits, house service connections, vaults, manholes, and all other appurtenances and facilities pertaining thereto whether owned or controlled by the City, other governmental bodies or privately owned by individuals, firms, or corporations, and used to serve the public with transportation, traffic control, gas, electricity, telephone, sewerage, drainage, water or other public or private property which may be affected by the work.

The Contract Documents contain data relative to existing public utility installations and structures above and below the ground surface. These data are not guaranteed as to their completeness or accuracy and it is the responsibility of the Contractor to make his own investigations to inform himself fully of the character, condition and extent of all such installations and structures as may be encountered and as may affect the construction operations.

The Contractor shall protect all public utility installations and structures from damage during the work. Access across any buried public utility installation or structure shall be made only in such locations and by means approved by the Engineer. The Contractor shall so arrange his operations as to avoid any damage to these facilities. All required protective devices and construction shall be provided by the Contractor at his expense. All existing public utilities damaged by the Contractor which are shown on the Plans or have been located in the field by the utility shall be repaired by the Contractor, at his expense, as directed by the Engineer. No separate payment shall be made for such protection or repairs to public utility installations or structures.

Public utility installations or structures owned or controlled by the City or other governmental body which are shown on the Plans to be removed, relocated, replaced or rebuilt by the Contractor shall be considered as a part of the general cost of doing the work and shall be included in the prices bid for the various Contract Items. No separate payment shall be made therefor.

Where public utility installations or structures owned or controlled by the City or other governmental body are encountered during the course of the work, and are not indicated on the Plans or in the Specifications, and when, in the opinion of the Engineer, removal, relocation, replacement or rebuilding is necessary to complete the work under this Contract, such work shall be accomplished by the utility having jurisdiction or such work may be ordered, in writing by the Engineer, for the Contractor to accomplish. If such work is accomplished by the utility having jurisdiction it will be carried out expeditiously and the Contractor shall give full cooperation to permit the utility to complete the removal, relocation, replacement or rebuilding as required. If such work is accomplished by the Contractor, it will be paid for as extra work as provided for in Article 7.02 of the Agreement.

The Contractor shall, at all times in performance of the work, employ approved methods and exercise reasonable care and skill so as to avoid unnecessary delay, injury, damage or destruction of public utility installations and structures; and shall, at all times in the performance of the work, avoid unnecessary interference with, or interruption of, public utility services, and shall cooperate fully with the owners thereof to that end.

All City and other governmental utility departments and other owners of public utilities, which may be affected by the work, will be informed in writing by the Engineer within two weeks after the execution of the Contract or Contracts covering the work. Such notice will set out, in general, and direct attention to, the responsibilities of the City and other governmental

utility departments and other owners of public utilities for such installations and structures as may be affected by the work and will be accompanied by one set of Plans and Specifications covering the work under such Contract or Contracts.

In addition to the general notice given by the Engineer, the Contractor shall give written notice to all City and other governmental utility departments and other owners of public utilities of the location of his proposed construction operations, at least forty-eight (48) hours in advance of breaking ground in any area or on any unit of the work. This can be accomplished by making the appropriate contact with the "Underground Utility Notification Center for Excavators (Call Candy)".

The maintenance, repair, removal, relocation, or rebuilding of public utility installations and structures, when accomplished by the Contractor as herein provided, shall be done by methods approved by the Engineer.

SECTION 2
PLANS AND SPECIFICATIONS

G-2.01 PLANS
The Plans referred to in the Contract Documents bear the general project name and number as shown in the Notice To Bidders.

When obtaining data and information from the Plans, figures shall be used in preference to scaled dimensions, and large scale drawings in preference to small scale drawings.

G-2.02 COPIES FURNISHED TO CONTRACTOR
After the Contract has been executed, the Contractor will be furnished with five sets of paper prints, the same size as the original drawings, of each sheet of the Plans and five copies of the Specifications. Additional copies of the Plans and Specifications, when requested, may be furnished to the Contractor at cost of reproduction.

The Contractor shall furnish each of the subcontractors, manufacturers, and material suppliers such copies of the Contract Documents as may be required for his work.

G-2.03 SUPPLEMENTARY DRAWINGS
When, in the opinion of the Engineer, it becomes necessary to explain more fully the work to be done or to illustrate the work further or to show any changes which may be required, drawings known as Supplementary Drawings, with specifications pertaining thereto, will be prepared by the Engineer and five paper prints thereof will be given to the Contractor.

The Supplementary Drawings shall be binding upon the Contractor with the same force as the Plans. Where such Supplementary Drawings require either less or more than the estimated quantities of work, credit to the City or compensation therefor to the Contractor shall be subject to the terms of the Agreement.

G-2.04 CONTRACTOR TO CHECK PLANS AND DATA
The Contractor shall verify all dimensions, quantities, and details shown on the Plans, Supplementary Drawings, Schedules, Specifications, or other data received from the Engineer, and shall notify him of all errors, omissions, conflicts, and discrepancies found therein. Failure to discover or correct errors, conflicts or discrepancies shall not relieve the Contractor of full responsibility for unsatisfactory work, faulty construction or improper operation resulting therefrom nor from rectifying such conditions at his own expense. He will not be allowed to take advantage of any errors or omissions as full instructions will be furnished by the Engineer, should such errors or omissions be discovered. All schedules are given for the convenience of the Engineer and the Contractor and are not guaranteed to be complete. The Contractor shall assume all responsibility for the making of estimates of the size, kind, and quality of materials and equipment included in work to be done under the Contract.

G-2.05 SPECIFICATIONS
The specifications consist of four parts, the General Provisions, the Technical Specifications, the Special Provisions and the Contract Items. The General Provisions and Technical Specifications contain general requirements which govern the work. The Special Provisions and the Contract Items modify and supplement these by detailed requirements for the work and shall always govern, whenever there appears to be conflict.

G-2.06 INTENT
All work called for in the Specifications applicable to this Contract, but not shown on the Plans in their present form, or vice versa, shall be of like effect as if shown or mentioned in both. Work not specified in either the Plans or in the Specifications, but involved in carrying out their intent or in the complete and proper execution of the work, is required and shall be performed by the Contractor as though it were specifically delineated or described.

The apparent silence of the Specifications as to any detail, or the apparent omission from them of a detailed description concerning any work to be done and materials to be furnished, shall be regarded as meaning that only the best general practice is to prevail and that only material and workmanship of the best quality is to be used, and interpretation of these Specifications shall be made upon that basis.

SECTION 3
WORKING DRAWINGS

G-3.01 SCOPE
The Contractor shall promptly prepare and submit layout, detail and shop drawings to insure proper construction, assembly, and installation of the work using those materials and methods as hereafter specified under the Technical Specifications, Special Provisions and Contract Items.

These drawings shall accurately and distinctly present the following:

a. All working and erection dimensions.
b. Arrangements and sectional views.
c. Necessary details, including complete information for making connections between work under this Contract and work under other Contracts.
d. Kinds of materials and finishes.
e. Parts listed and description thereof.

Drawings for mechanical equipment shall present, where applicable, such data as dimensions, weight and performance characteristics. These data shall show conformance with the performance characteristics and other criteria incorporated in the Plans and Specifications.

Each drawing shall be dated and shall contain the name of the project, Division number and description, the technical specifications section number, names of equipment or materials and the location at which the equipment or materials are to be installed. Location shall mean both physical location and location relative to other connected or attached material. The Engineer will return unchecked any submittal which does not contain complete data on the work and full information on related matters.

Stock or standard drawings will not be accepted for review unless full identification and supplementary information is shown thereon in ink or typewritten form.

The Contractor shall review all working drawing submittals before transmitting them to the Engineer to determine that they comply with requirements of the Specifications. Drawings which are incomplete or are not in compliance with the Contract Documents shall not be submitted for processing by the Engineer. The Contractor shall place his stamp of approval on all working drawings submitted to the Engineer to indicate compliance with the above.

G-3.02 APPROVAL
If the working drawings show departures from the Contract requirements, the Contractor shall make specific mention thereof in his letter of submittal; otherwise approval of such submittals shall not constitute approval of the departure. Approval of the drawings shall constitute approval of the subject matter thereof only and not of any structure, material, equipment, or apparatus shown or indicated.

The approval of drawings will be general and shall not relieve the Contractor of responsibility for the accuracy of such drawings, nor for the proper fitting and construction of the work, nor for the furnishing of materials or work required by the Contract and not indicated on the drawings. No work called for by working drawings shall be done until such drawings have been approved by the Engineer.

The procedure in seeking approval of the working drawings shall be as follows:

1.The Contractor shall submit four complete sets of drawings and other descriptive data together with one copy of a letter of transmittal to the Engineer for approval. The letter of transmittal shall contain the name of the project, contract number, technical specifications section number, the name of the Contractor, a list of drawings with numbers and titles, and any other pertinent information.

2.Drawings or descriptive data will be stamped "Approved", "Approved Subject to Corrections Marked", or "Examined and Returned for Correction" and one copy with a letter of transmittal will be returned to the Contractor.

3.If a drawing or other data is stamped "Approved", the Contractor shall insert the date of approval on five additional copies of the document and transmit the five copies to the Engineer together with one copy of a letter of transmittal containing substantially the same information as described in Instruction 1. above.

4.If a drawing or other data is stamped "Approved Subject to Corrections Marked", the Contractor shall make the corrections indicated and proceed as in Instruction 3., above.

5.If a drawing or data is stamped "Examined and Returned for Correction", the Contractor shall make the necessary corrections and resubmit the documents as set forth in Instruction 1., above. The letter of transmittal shall indicate that this is a resubmittal.

The Contractor shall revise and resubmit the working drawings as required by the Engineer, until approval thereof is obtained.

SECTION 4
MATERIALS AND EQUIPMENT

G-4.01 GENERAL REQUIREMENTS
All materials, appliances, and types or methods of construction shall be in accordance with the Specifications and shall, in no event, be less than that necessary to conform to the requirements of any applicable laws, ordinances, and codes.

All materials and equipment shall be new, unused, and correctly designed. They shall be of standard first grade quality, produced by expert personnel, and intended for the use for which they are offered. Materials or equipment which, in the opinion of the Engineer, are inferior or of a lower grade than indicated, specified, or required will not be accepted.

The quality of Workmanship and Materials entering into the work under this Contract shall conform to the requirements of the pertinent sections, clauses, paragraphs, and sentences, both directly and indirectly applicable thereto, of that part of the Technical Specifications, whether or not direct reference to such occurs in the Contract Items.

Equipment and appurtenances shall be designed in conformity with ANSI, ASME, IEEE, NEMA and other

generally accepted standards and shall be of rugged construction and of sufficient strength to withstand all stresses which may occur during fabrication, testing, transportation, installation, and all conditions of operation. All bearings and moving parts shall be adequately protected against wear by bushings or other approved means and shall be fully lubricated by readily accessible devices. Details shall be designed for appearance as well as utility. Protruding members, joints, corners, gear covers, and the like, shall be finished in appearance. All exposed welds shall be ground smooth and the corners of structural shapes shall be mitered.

Equipment shall be of the approximate dimensions as indicated on the Plans or as specified, shall fit the spaces shown on the Plans with adequate clearances, and shall be capable of being handled through openings provided in the structure for this purpose. The equipment shall be of such design that piping and electrical connections, ductwork, and auxiliary equipment can be assembled and installed without causing major revisions to the location or arrangement of any of the facilities.

Machinery parts shall conform exactly to the dimensions shown on the working drawings. There shall be no more fitting or adjusting in setting up a machine than is necessary in assembling high grade apparatus of standard design. The equivalent parts of identical machines shall be made interchangeable. All grease lubricating fittings on equipment shall be of a uniform type. All machinery and equipment shall be safeguarded in accordance with the safety codes of the ANSI and applicable state and local codes.

G-4.02 MANUFACTURER

The names of proposed manufacturers, suppliers, material, and dealers who are to furnish materials, fixtures, equipment, appliances or other fittings shall be submitted to the Engineer for approval, as early as possible, to afford proper investigation and checking. Such approval must be obtained before shop drawings will be checked. No manufacturer will be approved for any materials to be furnished under this Contract unless he shall be of good reputation and have a plant of ample capacity. He shall, upon the request of the Engineer, be required to submit evidence that he has manufactured a similar product to the one specified and that it has been previously used for a like purpose for a sufficient length of time to demonstrate its satisfactory performance.

All transactions with the manufacturers or subcontractors shall be through the Contractor, unless the Contractor shall request, in writing to the Engineer, that the manufacturer or subcontractor deal directly with the Engineer. Any such transactions shall not in any way release the Contractor from his full responsibility under this Contract.

Any two or more pieces of material or equipment of the same kind, type or classification, and being used for identical types of service, shall be made by the same manufacturer.

G-4.03 REFERENCE TO STANDARDS

Whenever reference is made to the furnishing of materials or testing thereof to conform to the standards of any technical society, organization or body, it shall be construed to mean the latest standard, code, specification or tentative specification adopted and published at the date of advertisement for proposals, even though reference has been made to an earlier standard, and such standards are made a part hereof to the extent which is indicated or intended.

Reference to a technical society, organization or body may be made in the Specifications by abbreviations, in accordance with the following list:

AASHTO for American Association of State Highway and Transportation Officials (formerly AASHO)
ACI for American Concrete Institute
AGMA for American Gear Manufacturer's Association
AFBMA for Anti-Friction Bearing Manufacturer's Association
AISC for American Institute of Steel Construction
AISI for American Iron and Steel Institute
ANSI for American National Standards Institute
ASCE for American Society of Civil Engineers
ASTM for American Society for Testing and Materials
ASME for American Society of Mechanical Engineers
AWS for American Welding Society
AWWA for American Water Works Association
AWPA for American Wood Preservers Association
CEMA for Conveyor Equipment Manufacturers Association
CIPRA for Cast Iron Pipe Research Association
IEEE for Institute of Electrical and Electronic Engineers
IPCEA for Insulated Power Cable Engineers Association
NEC for National Electrical Code
NEMA for National Electrical Manufacturers Association
SAE for Society of Automotive Engineers
SHBI for Steel Heating Boiler Institute
Fed.Spec. for Federal Specifications
Navy Spec. for Navy Department Specifications
U.L.,Inc. for Underwriters' Laboratories, Inc.

When no reference is made to a code, standard or specification, the Standard Specifications of the ANSI, the ASME, the ASTM, the IEEE, or the NEMA shall govern.

G-4.04 SAMPLES

The Contractor shall, when required, submit to the Engineer for approval typical samples of materials and equipment. The samples shall be properly identified by tags and shall be submitted sufficiently in advance of the time when they are to be incorporated into the work, so that rejections thereof will not cause delay. A letter of transmittal, in duplicate, from the Contractor requesting approval must accompany all such samples.

G-4.05 EQUIVALENT QUALITY

Whenever, in the Contract Documents, an article, material, apparatus, equipment, or process is called for by trade name or by the name of a patentee, manufacturer, or dealer or by reference to catalogs of a manufacturer or dealer, it shall be understood as intending to mean and specify the article, material, apparatus, equipment or process designated, or any

equal thereto in quality, finish, design, efficiency, and durability and equally serviceable for the purposes for which it is intended.

Whenever material or equipment is submitted for approval as being equal to that specified, the decision as to whether or not such material or equipment is equal to that specified shall be made by the Engineer.

Upon rejection of any material or equipment submitted as the equivalent of that specifically named in the Contract, the Contractor shall immediately proceed to furnish the designated material or equipment.

Neither the approval by the Engineer of alternate material or equipment as being equivalent to that specified nor the furnishing of the material or equipment specified, shall in any way relieve the Contractor of responsibility for failure of the material or equipment, due to faulty design, material, or workmanship, to perform the functions required of them by the Specifications.

G-4.06 DELIVERY

The Contractor shall deliver materials in ample quantities to insure the most speedy and uninterrupted progress of the work so as to complete thw work within the allotted time. The Contractor shall also coordinate deliveries in order to avoid a delay in, or impediment of, the progress of the work of any related Contractor.

G-4.07 CARE AND PROTECTION

The Contractor shall be solely responsible for properly storing and protecting all materials, equipment, and work furnished under the Contract from the time such materials and equipment are delivered at the site of the work until final acceptance thereof. He shall, at all times, take necessary precautions to prevent injury or damage by water, freezing, or by inclemencies of the weather to such materials, equipment and work. All injury or damage to materials, equipment, or work resulting from any cause whatsoever shall be made good by the Contractor.

The Engineer shall, in all cases, determine the portion of the site to be used by the Contractor for storage, plant or for other purposes. If, however, it becomes necessary to remove and restack materials to avoid impeding the progress of any part of the work or interference with the work to be done by any other Contractor, the Contractor shall remove and restack such materials at his own expense.

G-4.08 TOOLS AND ACCESSORIES

The Contractor shall, unless otherwise stated in the Contract Documents, furnish with each type, kind or size of equipment, one complete set of suitably marked high grade special tools and appliances which may be needed to adjust, operate, maintain, or repair the equipment. Such tools and appliances shall be furnished in approved painted steel cases, properly labeled and equipped with good grade cylinder locks and duplicate keys.

Spare parts shall be furnished as specified.

Each piece of equipment shall be provided with a substantial nameplate, securely fastened in place and clearly inscribed with the manufacturer's name, year of manufacture, serial number, weight and principal rating data.

G-4.09 INSTALLATION OF EQUIPMENT

The Contractor shall have on hand sufficient proper equipment and machinery of ample capacity to facilitate the work and to handle all emergencies normally encountered in work of this character.

Equipment shall be erected in a neat and workmanlike manner on the foundations at the locations and elevations shown on the Plans, unless directed otherwise by the Engineer during installation. All equipment shall be correctly aligned, leveled and adjusted for satisfactory operation and shall be installed so that proper and necessary connections can be made readily between the various units.

The Contractor shall furnish, install and protect all necessary anchor and attachment bolts and all other appurtenances needed for the installation of the devices included in the equipment specified. Anchor bolts shall be as approved by the Engineer and made of ample size and strength for the purpose intended. Substantial templates and working drawings for installation shall be furnished.

The Contractor shall, at his own expense, furnish all materials and labor for, and shall properly bed in non-shrink grout, each piece of equipment on its supporting base that rests on masonry foundations. Grout shall completely fill the space between the equipment base and the foundation.

G-4.10 OPERATING INSTRUCTIONS

The Contractor, through qualified individuals, shall adequately instruct designated employees of the City in the operation and care of all equipment installed hereunder, except for equipment that may be furnished by the City.

The Contractor shall also furnish and deliver to the Engineer three complete sets for permanent files, identified in accordance with Subsection G-3.01 hereof, of instructions, technical bulletins and any other printed matter, such as diagrams, prints or drawings, containing full information required for the proper operation, maintenance, and repair, of the equipment installed and the ordering of spare parts, except for equipment that may be furnished by the City.

In addition to the above three copies, the Contractor shall furnish any additional copies that may be required for use during construction and start-up operations.

G-4.11 SERVICE OF MANUFACTURER'S ENGINEER

The Contract prices for equipment shall include the cost of furnishing a competent and experienced engineer or superintendent who shall represent the manufacturer and shall assist the Contractor, when required, to install, adjust, test and place in operation the equipment in conformity with the Contract Documents. After the equipment is placed in

permanent operation by the City, such engineer or superintendent shall make all adjustments and tests required by the Engineer to provide that such equipment is in proper and satisfactory operating condition, and shall instruct such personnel as may be designated by the City in the proper operation and maintenance of such equipment.

SECTION 5
INSPECTION AND TESTING

G-5.01 GENERAL
The Contractor's attention is hereby directed to Article 3.03 of the Agreement.

Inspection and testing of materials will be performed by the City unless otherwise specified.

For tests specified to be made by the Contractor, the testing personnel shall make the necessary inspections and tests and the reports thereof shall be in such form as will facilitate checking to determine compliance with the Contract Documents. Five copies of the reports shall be submitted and authoritative certification thereof must be furnished to the Engineer as a prerequisite for the acceptance of any material or equipment.

If, in the making of any test of any material or equipment, it is ascertained by the Engineer that the material or equipment does not comply with the Contract, the Contractor will be notified thereof and he will be directed to refrain from delivering said material and equipment, or to remove it promptly from the site or from the work and replace it with acceptable material, without cost to the City.

Tests of electrical and mechanical equipment and appliances shall be conducted in accordance with recognized test codes of the ANSI, ASME, or the IEEE, except as may otherwise be stated herein.

The Contractor shall be fully responsible for the proper operation of equipment during tests and instruction periods and shall neither have nor make any claim for damage which may occur to equipment prior to the time when the City formally takes over the operation thereof.

G-5.02 COSTS
All inspection and testing of materials furnished under this Contract will be performed by the City or duly authorized inspection engineers or inspection bureaus without cost to the Contractor, unless otherwise expressly specified.

The cost of shop and field tests of equipment and of certain other tests specifically called for in the Contract Documents shall be borne by the Contractor and such costs shall be deemed to be included in the contract price.

Materials and equipment submitted by the Contractor as the equivalent to those specifically named in the Contract may be tested by the City for compliance. The Contractor shall reimburse the City for the expenditures incurred in making such tests on materials and equipment which are rejected for noncompliance.

G-5.03 INSPECTIONS OF MATERIALS
The Contractor shall give notice, in writing to the Engineer, sufficiently in advance of his intention to commence the manufacture or preparation of materials especially manufactured or prepared for use in or as part of the permanent construction. Such notice shall contain a request for inspection, the date of commencement and the expected date of completion of the manufacture or preparation of materials. Upon receipt of such notice the Engineer will arrange to have a representative present at such times during the manufacture as may be necessary to inspect the materials or he will notify the Contractor that inspection will be made at a point other than the point of manufacture, or he will notify the Contractor that inspection will be waived. The Contractor must comply with these provisions before shipping any material. Such inspection shall not release the Contractor from the responsibility for furnishing materials meeting the requirements of the Contract Documents.

G-5.04 CERTIFICATE OF MANUFACTURE
When inspection is waived or when the Engineer so requires, the Contractor shall furnish to him authoritative evidence in the form of Certificates of Manufacture that the materials to be used in the work have been manufactured and tested in conformity with the Contract Documents. These certificates shall be notarized and shall include copies of the results of physical tests and chemical analyses, where necessary, that have been made directly on the product or on similar products of the manufacturer.

G-5.05 SHOP TESTS OF OPERATING EQUIPMENT
Each piece of equipment for which pressure, duty, capacity, rating, efficiency, performance, function, or special requirements are specified shall be tested in the shop of the maker in a manner which shall conclusively prove that its characteristics comply fully with the requirements of the Contract Documents. No such equipment shall be shipped to the work until the Engineer notifies the Contractor, in writing, that the results of such tests are acceptable.

Five copies of the manufacturer's actual test data and interpreted results thereof, accompanied by a certificate of authenticity sworn to by a responsible official of the manufacturing company, shall be forwarded to the Engineer for approval.

The cost of the shop tests and of furnishing manufacturer's preliminary and shop test data of operating equipment shall be borne by the Contractor.

G-5.06 PRELIMINARY FIELD TESTS
As soon as conditions permit, the Contractor shall furnish all labor, materials, and instruments and shall make preliminary field tests of equipment. If the preliminary field tests disclose any equipment furnished under this Contract which does not comply with the requirements of the Contract Documents, the Contractor shall, prior to the acceptance tests, make all changes, adjustments, and replacements required.

G-5.07 FINAL FIELD TESTS
Upon completion of the work and prior to final payment, all equipment and appliances installed under this Contract shall be subjected to acceptance tests as specified or required to prove compliance with the Contract Documents.

The Contractor shall furnish labor, fuel, energy, water and all other materials, equipment, and instruments necessary for all acceptance tests, at no additional cost to the City.

G-5.08 FAILURE OF TESTS
Any defects in the materials and equipment or their failure to meet the tests, guarantees or requirements of the Contract Documents shall be promptly corrected by the Contractor by replacements or otherwise. The decision of the Engineer as to whether or not the Contractor has fulfilled his obligations under the Contract shall be final and conclusive. If the Contractor fails to make those corrections or if the improved materials and equipment, when tested, shall again fail to meet the guarantees or specified requirements, the City, notwithstanding its partial payment for work, and materials and equipment, may reject the materials and equipment and may order the Contractor to remove them from the site at his own expense.

In case the City rejects any materials and equipment, then the Contractor shall replace the rejected materials and equipment within a reasonable time. If he fails to do so, the City may, after the expiration of a period of thirty calendar days after giving him notice in writing, proceed to replace such rejected materials and equipment, and the cost thereof shall be deducted from any compensation due or which may become due the Contractor under this Contract.

The City agrees to obtain other equipment within a reasonable time and the Contractor agrees that the City may use the equipment furnished by him without rental or other charges until the new equipment is obtained.

Materials or work in place that fails to pass acceptability tests shall be retested at the direction of the construction engineer all such retests shall be at the Contractor's expense. The rates charged shall be in accordance with the Department of Public Works current annual inspection contract which is available for inspection at the offices of the Department of Public Works.

G-5.09 FINAL INSPECTION
The procedures for final inspection shall be in accordance with the provisions of Article 4.07 of the Agreement. During such final inspections, the work shall be clean and free from water. In no case will the final estimate be prepared until the Contractor has complied with all the requirements set forth and the Engineer has made his final inspection of the entire work and is satisfied that the entire work is properly and satisfactorily cosntructed in accordance with the requirements of the Contract Documents.

SECTION 6

TEMPORARY STRUCTURES

G-6.01 GENERAL
All false work, scaffolding, ladders, hoistways, braces, pumping plants, shields, trestles, roadways, sheeting, centering forms, barricades, drains, flumes, and the like, any of which may be needed in the construction of any part of the work and which are not herein described or specified in detail, must be furnished, maintained and removed by the Contractor, and he shall be responsible for the safety and efficiency of such works and for any damages that may result from their failure or from their improper construction, maintenance, or operation.

G-6.02 PUBLIC ACCESS
At all points in the work where public access to any building, house, place of business, public road, or sidewalk would be obstructed by any action of the Contractor in executing the work required by this Contract, the Contractor shall provide such temporary structure, bridges or roadway as may be necessary to maintain public access at all times. At least one lane for vehicular traffic shall be maintained in streets in which the Contractor is working. Street closure permits are required from the Department of Public Works.

The Contractor shall provide suitable temporary bridges, as directed by the Engineer, at street intersections when necessary for the maintenance of vehicular and pedestrian traffic.

Prior to temporarily cutting of access to driveways and garages, the Contractor shall give twelve (12) hours notice to affected property owners. Interruptions to use of private driveways shall be kept to a minimum.

G-6.03 CONTRACTOR'S FIELD OFFICE
The Contractor shall erect, furnish and maintain a field office with a telephone at the site during the entire period of construction. He or an authorized agent shall be present at this office at all times while his work is in progress. Readily accessible copies of both the Contract Documents and the latest approved working drawings shall be kept at this field office.

G-6.04 TEMPORARY FENCE
If, during the course of the work, it is necessary to remove or disturb any fence or part thereof, the Contractor shall, at his own expense, if so ordered by the Engineer, provide a suitable temporary fence which shall be maintained until the permanent fence is replaced. The Engineer shall be solely responsible for the determination of the necessity for providing a temporary fence and the type of temporary fence to be used.

G-6.05 RESPONSIBILITY FOR TEMPORARY STRUCTURES
In accepting the Contract, the Contractor assumes full responsibility for the sufficiency and safety of all temporary structures or work and for any damage which may result from their failure or their improper construction, maintenance, or operation and will indemnify and save harmless the City from

all claims, suits or actions and damages or costs of every description arising by reason of failure to comply with the above provisions.

SECTION 7
TEMPORARY SERVICES

G-7.01 WATER
The Contractor shall provide the necessary water supply at his own expense. He shall, if necessary, provide and lay necessary waterlines from existing mains to the place of using, shall secure all necessary permits and pay for all taps to water mains or hydrants and for all water used at the established rates.

G-7.02 LIGHT AND POWER
The Contractor shall provide, at his own expense, temporary lighting and power facilities required for the proper prosecution and inspection of the work. If, in the opinion of the Engineer, these facilities are inadequate, the Contractor will not be permitted to proceed with any portion of the work affected thereby.

G-7.03 SANITARY REGULATIONS
The Contractor shall prohibit and prevent the committing of nuisances on the site of the work or on adjoining property and shall discharge any employee who violates this rule.

Ample washrooms and toilet facilities and a drinking water supply shall be furnished and maintained in strict conformity with the law by the Contractor for use by his employees.

G-7.04 ACCIDENT PREVENTION
Precautions shall be exercised at all times for the protection of persons and property. The safety provisions of applicable laws, building and construction codes shall be observed. The Contractor shall comply with the U. S. Department of Labor Safety and Health Regulations for construction promulgated under the Occupational Safety and Health Act of 1970 (PL 91-596), and under Section 107 of the Contract Work. Hours and Safety Standards Act (PL 91-54), except where state and local safety standards exceed the federal requirements and except where state safety standards have been approved by the Secretary of Labor in accordance with provisions of the Occupational Safety and Health Act.

G-7.05 FIRST AID
The Contractor shall keep upon the site, at each location where work is in progress, a completely equipped first aid kit and shall provide ready access thereto at all times when men are employed on the work.

G-7.06 HEATING
The Contractor shall provide temporary heat, at his own expense, whenever required on account of work being carried on during cold weather and to prevent freezing of water pipes and other damage to the work.

SECTION 8

LINES AND GRADES

G-8.01 GENERAL
All work done under this Contract shall be constructed in accordance with the lines and grades shown on the Plans, or as given by the Engineer. The full responsibility for keeping alignment and grade shall rest upon the Contractor.

The Engineer will establish bench marks and base line controlling points. Reference remarks for lines and grades as the work progresses will be located to cause as little inconvenience to the prosecution of the work as possible. The Contractor shall so place excavation and other materials as to cause no inconvenience in the use of the use of the reference marks provided. He shall remove any obstructions placed by him contrary to this provision.

G-8.02 SURVEYS
The Contractor shall furnish and maintain, at his own expense, stakes and other such materials, and give such assistance, including qualified helpers, as may be required by the Engineer for setting reference marks. The Contractor shall check such reference marks by such means as he may deem necessary and, before using them, shall call the Engineer's attention to any inaccuracies. The Contractor shall, at his own expense, establish all working or construction lines and grades as required from the reference marks set by the Engineer, and shall be solely responsible for the accuracy thereof. He shall, however, be subject to the check and review of the Engineer.

The Contractor shall keep the Engineer informed a reasonable time in advance as to his need for line and grade reference marks, in order that they may be furnished and all necessary measurements made for record and payment with the minimum of inconvenience to the Engineer or of delay to the Contractor.

It is the intention not to delay the work for the establishment of reference marks but, when necessary, working operations shall be suspended for such reasonable time as the Engineer may require for this purpose.

G-8.03 SAFEGUARDING MARKS
The Contractor shall safeguard all points, stakes, grade marks, monuments and bench marks made or established on the work, bear the cost of reestablishing them if disturbed, and bear the entire expense of rectifying work improperly installed due to not maintaining or protecting or to removing without authorization such established points, stakes and marks.

The Contractor shall safeguard all existing and known property corners, monuments and marks adjacent to but not related to the work and, if required, shall bear the cost of reestablishing them if disturbed or destroyed.

G-8.04 DATUM PLANE
All elevations indicated or specified refer to the Mean Sea Level Datum of the U.S.C. & G.S. (N.O.S.) which is 0.80 feet above the Mean Low Water Datum of the U. S. Army

Corps of Engineers.

SECTION 9
ADJACENT STRUCTURES AND LANDSCAPING

G-9.01 RESPONSIBILITY
The responsibility for removal, replacement, relocation, repair, rebuilding or protection of all public utility installations, including poles, tracks, pipes, wires, conduits, house service connections, vaults, manholes, sewers, traffic control and fire alarm signal circuit installations and other appurtenances and facilities shall be in accordance with G-1.02 and G-1.03.

The Contractor shall also be entirely responsible and liable for all damage or injury as a result of his operations to all other adjacent public and private property, structures of any kind and appurtenances thereto met with during the progress of the work. The cost of protection, replacement in their original locations and conditions or payment of damages for injuries to such adjacent public and private property and structures affected by the work, whether or not shown on the Plans, and the removal, relocation, and reconstruction of such items called for on the Plans or specified shall be included in the various Contract Items and no separate payment will be made therefor. Where such public and private property, structures of any kind and appurtenances thereto are not shown on the Plans and when, in the opinion of the Engineer, removal or relocation and reconstruction is necessary to avoid interference with the work, payment therefor will be made as provided for extra work in Article 7.02 of the Agreement.

G-9.02 PROTECTION OF TREES
All trees and shrubs shall be adequately protected by the Contractor with boxes or otherwise and, within the City of Tampa, in accordance with ordinances governing the protection of trees. No excavated materials shall be placed so as to injure such trees or shrubs. Trees or shrubs destroyed by negligence of the Contractor or his employees shall be replaced by him with new stock of similar size and age, at the proper season, and at the sole expense of the Contractor.

Beneath trees or other surface structures, where possible, pipelines may be built in short tunnels, backfilled with excavated materials, except as otherwise specified, or the trees or structures carefully supported and protected from damage.

The City may order the Contractor, for the convenience of the City, to remove trees along the line of trench excavation. If so ordered, the City will obtain any permits required for removal of trees. Such tree removal ordered shall be paid for under the appropriate Contract Items.

G-9.03 LAWN AREAS
Lawn areas shall be left in as good condition as before the starting of the work. Where sod is to be removed, it shall be carefully removed and later replaced, or the area where sod has been removed shall be restored with new sod in the manner described in the Technical Specifications section.

G-9.04 RESTORATION OF FENCES
Any fence, or part thereof, that is damaged or removed during the course of the work shall be replaced or repaired by the Contractor and shall be left in as good a condition as before the starting of the work. The manner in which the fence is repaired or replaced and the materials used in such work shall be subject to the approval of the Engineer. The cost of all labor, materials, equipment, and work for the replacement or repair of any fence shall be deemed included in the appropriate Contract Item or Items, or if no specific Item is provided therefor, as part of the overhead cost of the work, and no additional payment will be made therefor.

SECTION 10
PROTECTION OF WORK AND PUBLIC

G-10.01 TRAFFIC REGULATIONS
The Contractor shall arrange his work to comply with Article G-6.02. The work shall be done with the least possible inconvenience to the public and to that end the work may be confined by the Engineer to one block at a time.

G-10.02 BARRIERS AND LIGHTS
During the prosecution of the work, the Contractor shall put up and maintain at all times such barriers, and lights, as will effectually prevent accidents. The Contractor shall provide suitable barricades, red lights, "danger" or "caution" or "street closed" signs and watchmen at all places where the work causes obstructions to the normal traffic or constitutes in any way a hazard to the public. Such barriers and signs shall be constructed to State of Florida Department of Transportation standards and placed as recommended by the Traffic Division of the City's Department of Public Works.

No open fires will be permitted.

G-10.03 SMOKE PREVENTIONS
The Contractor shall use hard coal, coke, oil or gas as fuel for equipment generating steam. A strict compliance with ordinances regulating the production and emission of smoke will be required.

G-10.04 NOISE
The Contractor shall eliminate noise to as great an extent as practicable at all times. Air compressing plants shall be equipped with silencers and the exhaust of all gasoline motors or other power equipment shall be provided with mufflers. In the vicinity of hospitals and schools, special care shall be used to avoid noise or other nuisances. The Contractor shall strictly observe all local regulations and ordinances covering noise control.

Except in the event of an emergency, no work shall be done between the hours of 7:00 p.m. and 7:00 a.m., or on Sundays. If the proper and efficient prosecution of the work requires operations during the night, the written permission of the Engineer shall be obtained before starting such items of the work.

G-10.05 ACCESS TO PUBLIC SERVICES
Neither the materials excavated nor the materials or plant used in the construction of the work shall be so placed as to prevent free access to all fire hydrants, valves or manholes.

G-10.06 DUST PREVENTION
The Contractor shall prevent dust nuisance from his operations or from traffic by keeping the streets sprinkled with water at all times.

G-10.07 PRIVATE PROPERTY
The Contractor shall so conduct the work that no equipment, material, or debris will be placed or allowed to fall upon private property in the vicinity of the work unless he shall have obtained the owner's written consent thereto and shall have shown this consent to the Engineer.

SECTION 11
SLEEVES AND INSERTS

G-11.01 COORDINATION
When the Contract requires the placing of conduits, saddles, boxes, cabinets, sleeves, inserts, foundation bolts, anchors, and other like work in floors, roofs, or walls of buildings and structures, they shall be promptly installed in conformity with the construction program. The Contractor who erects the floors, roofs, and walls shall facilitate such work by fully cooperating with the Contractors responsible for installing such appurtenances. The Contractor responsible for installing such appurtenances shall arrange the work in strict conformity with the construction schedule and avoid interference with the work of other contractors.

G-11.02 OPENINGS TO BE PROVIDED
In the event timely delivery of sleeves and other materials cannot be made and to avoid delay, the affected Contractor may arrange to have boxes or other forms set at the locations where the appurtenances are to pass through or into the floors, roofs, walls, or other work. Upon the subsequent installation of these appurtenances, the Contractor erecting the structure shall fill around them with materials as required by the Contract. The necessary expenditures incurred for the boxing out and filling in shall be borne by the Contractor or Contractors required to furnish the sleeves and inserts. Formed openings and later installation of sleeves will not be permitted at locations subject to hydrostatic pressure.

SECTION 12
CUTTING AND PATCHING

G-12.01 GENERAL
The Contractor shall do all cutting, fitting, or patching of his portion of the work that may be required to make the several parts thereof join and coordinate in a manner satisfactory to the Engineer and in accordance with the Plans and Specifications. The work must be done by competent workmen skilled in the trade required by the restoration.

SECTION 13
CLEANING

G-13.01 DURING CONSTRUCTION
During construction of the work, the Contractor shall, at all times, keep the site of the work and adjacent premises as free from material, debris, and rubbish as is practicable and shall remove the same from any portion of the site if, in the opinion of the Engineer, such material, debris, or rubbish constitutes a nuisance or is objectionable.

The Contractor shall remove from the site all of his surplus materials and temporary structures when no further need therefor develops.

G-13.02 FINAL CLEANING
At the conclusion of the work, all erection plant, tools, temporary structures and materials belonging to the Contractor shall be promptly taken away, and he shall remove and promptly dispose of all water, dirt, rubbish or any other foreign substances.

The Contractor shall thoroughly clean all equipment and materials installed by him and shall deliver such materials and equipment undamaged in a bright, clean, polished, and new appearing condition.

SECTION 14
MISCELLANEOUS

G-14.01 PROTECTION AGAINST SILTATION AND BANK EROSION
The Contractor shall arrange his operations to minimize siltation and bank erosion on construction sites and on existing or proposed watercourses and drainage ditches.

G-14.02 EXISTING FACILITIES
The work shall be so conducted to maintain existing facilities in operation insofar as is possible. Work shall be scheduled to minimize bypassing during construction. Requirements and schedules of operations for maintaining existing facilities in service during construction shall be as described in the Special Provisions.

G-14.03 USE OF CHEMICALS
All chemicals used during project construction or furnished for project operation, whether herbicide, pesticide, disinfectant, polymer, reactant or of other classification, must show approval of either EPA or USDA. Use of all such chemicals and disposal of residues shall be in strict conformance with instructions.

* * * * * * *

City of Tampa – DMI Sub-(Contractors/Consultants/Suppliers) Payments

(FORM MBD-30)

[ ] Partial [ ] Final

Contract No.: _____ WO#,(if any):_____ Contract Name:_____

Contractor Name:_____ Address:_____

Federal ID:_____ Phone:_____ Fax:_____ Email:_____

GC Pay Period:_____ Payment Request/Invoice Number:_____ City Department:_____

Total Amount Requested for pay period: $_____ Total Contract Amount(including change orders):$_____

-Type of Ownership - (F=Female M=Male), BF BM = African Am., HF HM = Hispanic Am., AF AM = Asian Am., NF NM = Native Am., CF CM = Caucasian S = SLBE

Type Trade/Work Activity []Sub []Supplier Federal ID		Total Sub Contract Or PO Amount	Amount Paid To Date Amount Pending Previously Reported	Amount To Be Paid For This Period Sub Pay Period Ending Date
			$	$
			$	$
			$	$
			$	$
			$	$
			$	$

(Modifying This Form or Failure to Complete and Sign May Result in Non-Compliance)

Certification: I hereby certify that the above information is a true and accurate account of payments to sub – contractors/consultants on this contract.

Signed:_____ Name/Title:_____ Date:_____

Note: Detailed Instructions for completing this form are on the next page

Page 2 of 2 – DMI Payment

Instructions for completing The DMI Sub-(Contractors/Consultants/ Suppliers) Payment Form

(Form MBD-30)

This form must be submitted with all invoicing or payment requests where there has been subcontracting rendered for the pay period. If applicable, after payment has been made to the subcontractor, "Waiver and Release of Lien upon Progress Payment", "Affidavit of Contractor in Connection with Final Payment", or an affidavit of payment must be submitted with the amount paid for the pay period. The following will detail what data is required for this form. The instructions that follow correspond to the headings on the form required to be completed. **(Modifying or omitted information from this form my result in non-compliance).**

- **Contract No.** This is the number assigned by the City of Tampa for the bid or proposal.
- **W.O.#** If the report covers a work order number (W.O.#) for the contract, please indicate it in that space.
- **Contract Name.** This is the name of the contract assigned by the City of Tampa for the bid or proposal.
- **Contractor Name.** The name of your business.
- **Address.** The physical address of your business.
- **Federal ID.** A number assigned to a business for tax reporting purposes.
- **Phone.** Telephone number to contact business.
- **Fax.** Fax number for business.
- **Email.** Provide email address for electronic correspondence.
- **Pay Period.** Provide start and finish dates for pay period. (e.g. 05/01/13 – 05/31/13)
- **Payment Request/Invoice Number.** Provide sequence number for payment requests. (ex. Payment one, write 1 in space, payment three, write 3 in space provided.)
- **City Department**. The City of Tampa department to which the contract pertains.
- **Total Amount Requested for pay period.** Provide all dollars you are expecting to receive for the pay period.
- **Total Contract Amount (including change orders).** Provide expected total contract amount. This includes any change orders that may increase or decrease the original contract amount.
- **Signed/Name/Title/Date**. This is your certification that the information provided on the form is accurate.
- **See attached documents.** Check if you have provided any additional documentation relating to the payment data. Located at the bottom middle of the form.
- **Partial Payment.** Check if the payment period is a partial payment, not a final payment. Located at the top right of the form.
- **Final Payment.** Check of this period is the final payment period. Located at the top right of the form.

The following instructions are for information of any and all subcontractors used for the pay period.

- **(Type) of Ownership.** Indicate the Ethnicity and Gender of the owner of the subcontracting business or SLBE.
- **Trade/Work Activity.** Indicate the trade, service, or material provided by the subcontractor.
- **SubContractor/SubConsultant/Supplier.** Please indicate status of firm on this contract.
- **Federal ID.** A number assigned to a business for tax reporting purposes. This information is critical in proper identification of the subcontractor.
- **Company Name, Address, Phone & Fax**. Provide company information for verification of payments.
- **Total Subcontract Amount.** Provide total amount of subcontract for subcontractor including change orders.
- **Amount Paid To Date.** Indicate all dollars paid to date for the subcontractor.
- **Amount Pending, Previously Reported.** Indicate any amount previously reported that payments are pending.
- **Amount To Be Paid for this Period.** Provide dollar amount of dollars requested for the pay period.
- **Sub Pay Period Ending Date.** Provide date for which subcontractor invoiced performed work.

Forms must be signed and dated or will be considered incomplete. The company authorized representative must sign and certify the information is true and accurate. Failure to sign this document or return the document unsigned can be cause for determining a company is in non-compliance of Ordinance 2008-89.

If any additional information is required or you have any questions, you may call the Minority Business Development Office at (813) 274-5522.

SIGN EXAMPLE ONLY GRAPHIC TO BE DEVELOPED BY CONTRACTOR

not to scale

Sign Information

Building a Better Tampa

David L. Tippin Water Treatment Facility
Caustic Soda Piping Improvements

Project provides for improvements at the David L. Tippin Water Treatment Facility to improve the reliability and safety of the Sodium Hydroxide System of the water distribution system within the facility.

$TBD investment
Scheduled for completion in TBD 2014

TBD

Colors

Blue: Sherwin Williams Naval SW6244
Green: Sherwin Williams Center Stage SW6920
White: Sherwin Williams Pure White SW7005

Font

Franklin Gothic

K:\CA\edr\dpw project sign 4-28-04.dwg, 08/22/2005 12:32:38 PM, pw1m

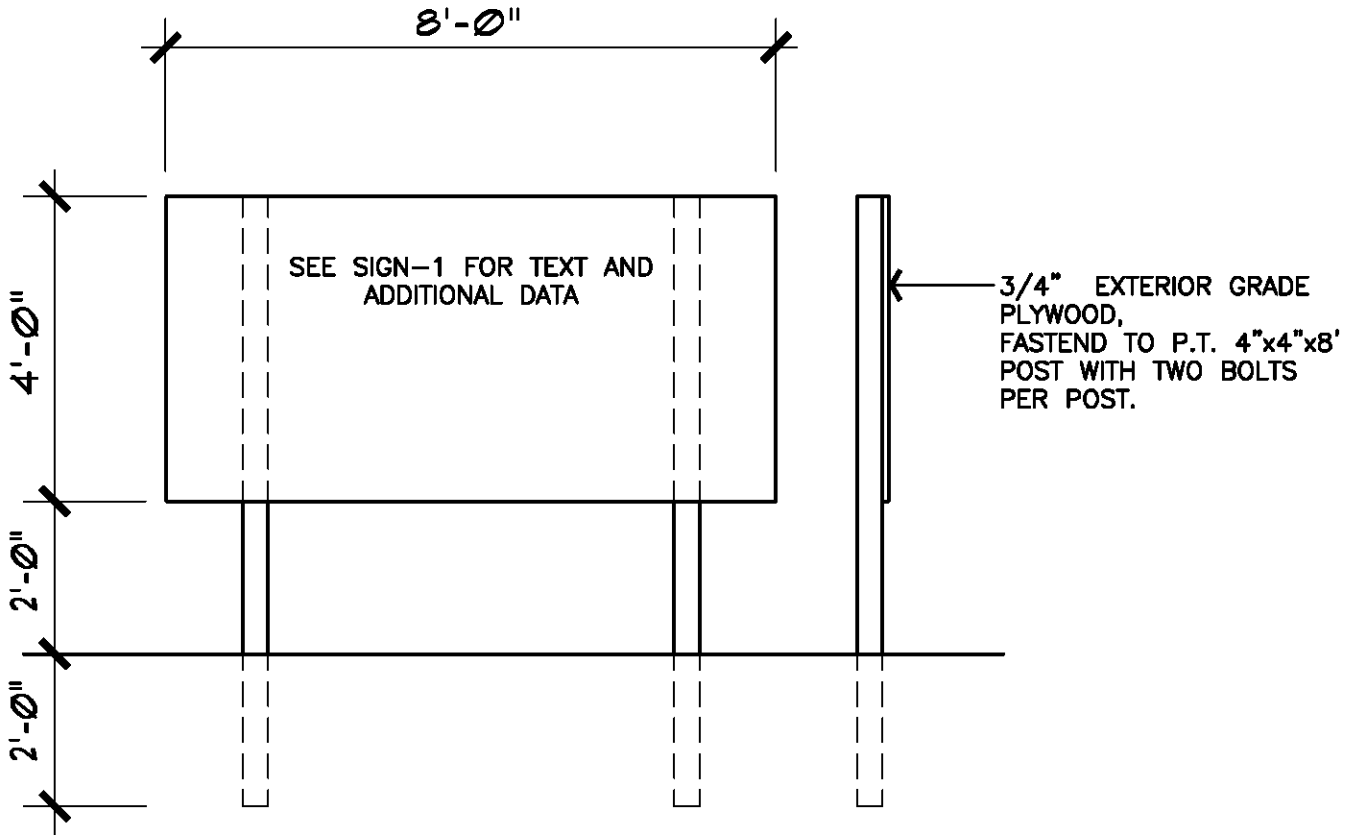

CITY OF TAMPA–PROJECT SIGN
REVISED 4/28/04

SIGN – 2

DIVISION 2 - TECHNICAL PROVISIONS

Table of Contents

DIVISION 2 - TECHNICAL PROVISIONS 1

SECTION 001 - STANDARD SPECIFICATIONS 1
SECTION 004 - SCOPE OF WORK 3
SECTION 101 - MOBILIZATION 3
SECTION 102 - MAINTENANCE OF TRAFFIC 3
SECTION 104 - PREVENTION, CONTROL, AND ABATEMENT OF EROSION AND WATER POLLUTION 5
SECTION 110 - CLEARING AND GRUBBING 11
SECTION 120 - EXCAVATION AND EMBANKMENT 12
SECTION 120-1100 - GRADING 14
SECTION 530-1 RIPRAP (RUBBLE) 14
SECTION 530-2 ARMOR STONE 14
SECTION 580 - LANDSCAPE 19
SECTION 901 – COARSE AGGREGATE – BEDDING STONE (3-5”) 20
SECTION 985-1 - GEOSYNTHETIC FABRIC 21
SECTION 985-2 - EROSION CONTROL BLANKET 21
SECTION 999 - RECORDS/AS-BUILTS 21

SECTION 001 - STANDARD SPECIFICATIONS

A. All work of this Contract shall conform to the applicable technical specifications of Florida Department of Transportation Standard Specifications for Road and Bridge Construction, 2017 and Supplemental Specification, Special Provisions and addenda thereto, except as modified and supplemented hereinafter. Reference to Article numbers herein-after apply to the FDOT Standard Specifications, and reference in FDOT Standard Specifications to Department shall be taken as the City of Tampa or its appointed Representative. Wherever the Specifications, Supplementals, etc. may refer to the "Owner", "Department", "State of Florida Department of Transportation", or words relating to offices of State Government, such words shall be taken as meaning Owner or City of Tampa, Florida. Wherever the word “Owner’s Engineer”, “Engineer”, “Project Engineer”, etc., appears, it shall be taken to mean the Registered Professional Project Engineer of the City of Tampa Public Works Department, Engineering Division acting directly or through duly authorized representatives. Wherever the word “Resident Engineer” appears, it shall be taken to mean an authorized representative of the City of Tampa's Engineer on the Project (Resident Construction Inspector) who will act as an agent for the City of Tampa, assigned to observe the progress quantity and quality of the work.

B. Permissible Work Days and Hours
Regular working hours are defined as Monday through Friday 7AM to 5PM, however, construction activity shall be limited to those daylight hours between to ½ hour after sunrise through ½ hour before sundown. The times sunset shall be those published by the National Oceanic and Atmospheric Administration for each day of the work. At the CONTRACTOR’s election, construction activity may be undertaken seven days per week. Suitable additional safety precautions, including additional personnel or

barricades as required, shall be implemented during weekend operations.

C. Site Maintenance
The CONTRACTOR shall inspect the work areas at the end of every workday to ensure that all debris left by the CONTRACTOR's and or subcontractor's workers has been removed from the work areas and properly disposed. Turbidity curtains shall be removed each day to eliminate the ability for entanglement by manatees, sea turtles or smalltooth sawfish.

D. Project Sign
The CONTRACTOR shall furnish, install, maintain, and remove a Project Sign at the work site. The sign shall be of the format, style and minimum size indicated on the sketch at the end of these specifications. The sign shall be neatly and sturdily constructed and shall be securely erected in a workmanlike manner to support the sign properly for the life of the contract. Upon completion and acceptance of construction, the CONTRACTOR shall remove the sign and dispose of the sign at a disposal site subject to the approval of the CITY OF TAMPA.

E. Construction Access
The CONTRACTOR will access the construction site via North River Boulevard and the existing Construction Access shown on the Drawings. During construction, the CONTRACTOR shall make provisions to (a) not interfere with normal vehicular traffic on North River Boulevard and, (b) control public access and provide for public safety within the construction area and Construction Access. Existing topography, vegetation, and upland improvements shall be disturbed only to the minimum extent necessary for construction and construction access and other authorized activities. To the maximum extent feasible, the CONTRACTOR shall limit clearing for the access to areas of exotic vegetation. The CONTRACTOR shall avoid disturbing native vegetation wherever possible; any disturbance of existing native vegetation by the CONTRACTOR shall be restored by the CONTRACTOR at no additional cost to the CITY OF TAMPA.

F. Inspection Notification
The CONTRACTOR shall notify the CITY OF TAMPA at least 48 hours before the following construction activities:

- Mobilization
- Arrival of rock rip-rap/fill at the site
- Site preparation
- Material placement
- Dredging activities commence
- Site restoration
- Demobilization

G. Pre-Construction Meeting
Prior to commencement of construction, the CONTRACTOR shall meet with the CITY OF TAMPA to verify the construction access, and pre-construction conditions of the site (Pre-Construction Photos/Video to be supplied by the Contractor). At this meeting, the CONTRACTOR shall identify (a) his proposed trucking or barge route and provide, (b) schedule for the work, (c) methods of construction staking, (d)

location of staging area, and (e) location of the Project Sign; these items are subject to review and acceptance by the CITY OF TAMPA.

H. Survey Layout & As-Built
The Contractor's Surveyor shall establish secondary control points and maintain grade stakes throughout the project. After final completion all grade stakes must be collected and disposed of properly by the CONTRACTOR.

I. Completion of Work
Upon Substantial Completion of the Work, deliver Record Drawings/As-Built Drawings to ENGINEER. Final payment will not be made until satisfactory record documents are received and approved by ENGINEER.

SECTION 004 - SCOPE OF WORK

The project consists of maintenance dredging and re-contouring the drainage ditch at the south end of Ignacio Haya Park. Dredged material will be stockpiled and tested in the staging areas. It will be tested for suitable reuse as fill along the park shoreline. The CONTRACTOR will also provide, deliver, place and grade specifically sized rock riprap along approximately 1000 linear feet of shoreline for rehabilitation of an existing breakwater and installation of a new rip rap revetment along the east shore of the Hillsborough River and within Ignacio Haya Park. The CONTRACTOR is to place clean rock riprap along the existing shoreline as shown in the Construction Drawings. The CONTRACTOR will also install flared end sections on two existing 18" HDPE pipes and treat and dispose of exotic/nuisance vegetation. The shoreline will be planted with native estuarine species according to the planting plan. The construction site is located on the Hillsborough River Shoreline and lies directly east of, and parallel to the Hillsborough River south of Hillsborough Avenue Bridge.

SECTION 101 - MOBILIZATION

The work specified in this section shall conform to Section 101 of the Florida Department of Transportation Standard Specifications for Road and Bridge Construction.

Item of Payment

Payment for the work specified in this item shall be made under:

Bid Item No. 101-1 - Mobilization – Per Lump Sum Sixty percent (60%) of the lump sum price for mobilization-demobilization is payable to the CONTRACTOR after 100 tons of material have been delivered. Truck weight tickets will be used to verify the volume. The remaining forty percent (40%) will be paid upon completion and acceptance of the all work.

All costs associated with the work and not specifically included in other bid items shall be included in the CONTRACTOR's bid for BID ITEM 101-1.

SECTION 102 - MAINTENANCE OF TRAFFIC

The work specified in this item shall conform to Section 102 of the Florida Department of Transportation Standard Specifications for Road and Bridge Construction, except as modified

herein.

A. GENERAL PROVISIONS-DESCRIPTION: The work specified in this Section consists of maintaining traffic within the limits of the project for the duration of the construction period, including any temporary suspensions of the work. It shall include the construction and maintenance of any necessary detour facilities; the providing of necessary facilities for access to residences, businesses, etc., along the project; the furnishing, installing and maintaining of traffic control and safety devices during construction, the control of dust through the use of calcium chloride if necessary, and any other special requirements for safe and expeditious movement of traffic as may be called for on the plans. The term, Maintenance of Traffic, as used herein, shall include all of such facilities, devices and operations as are required for the safety and convenience of the public as well as for minimizing public nuisance.

B. BEGINNING DATE OF CONTRACTOR'S RESPONSIBILITY: The Contractor shall present his Maintenance of Traffic Plan at the pre-construction conference. The Maintenance of Traffic Plan shall indicate the type and location of all signs, lights, barricades, striping and barriers to be used for the safe passage of pedestrians and vehicular traffic through the project and for the protection of the workmen. The plan will indicate conditions and setups for each phase of the CONTRACTOR'S activities.

When the project plans include or specify a specific Maintenance of Traffic Plan, alternate proposals will be considered when they are found to be equal to or better than the plan specified.

In no case may the CONTRACTOR begin work until the Maintenance of Traffic Plan has been approved in writing by the ENGINEER. Modifications to the Maintenance of Traffic Plan that become necessary shall also be approved in writing. Except in an emergency, no changes to the approved plan will be allowed until approval to change such plan has been received.

The cost of all work included in the Maintenance of Traffic Plan shall be included in the pay item for Maintenance of Traffic.

The Contractor shall be responsible for performing daily inspections, including weekends and holidays, with some inspections at nighttime, of the installations on the project and replace all equipment and devices not conforming with the approved standards during that inspection. The project personnel will be advised of the schedule of these inspections and be given the opportunity to join in the inspection as is deemed necessary.

C. TRAFFIC CONTROL - STANDARDS: The FDOT Design Standards for Design, Construction, Maintenance and Utility Operations On the State Highway System, Edition as dated on the plans set forth the basic principles and prescribes minimum standards to be followed in the design, application, installation, maintenance and removal of all traffic control devices and all warning devices and barriers which are necessary to protect the public and workmen from hazards within the project limits. The standards established in the aforementioned manual constitute the minimum requirements for normal conditions, and additional traffic control devices warning

devices, barriers or other safety devices will be required where unusual, complex or particularly hazardous conditions exist.

The above referenced standards were developed using F.H.W.A., U.S.D.O.T. Manual on Uniform Traffic Control Devices (MUTCD).

D. TRAFFIC CONTROL DEVICES, WARNING DEVICES AND BARRIERS - INSTALLATION: The responsibility for installation and maintenance of adequate traffic control devices, warning devices and barriers, for the protection of the travel in public and workmen, as well as to safeguard the work area in general shall rest with the CONTRACTOR. Consideration shall be given to recommendations of the Engineer. The required traffic control devices, warning devices and barriers shall be erected by the Contractor prior to creation of any hazardous condition and in conjunction with any necessary re-routing of traffic. The CONTRACTOR shall immediately remove, turn or cover any devices or barriers which do not apply to existing conditions. All traffic control devices shall conform to MUTCD standards and shall be clean and relatively undamaged. Damaged devices diminishing legibility and recognition, during either night or day conditions, are not acceptable for use.

E. NO WAIVER OF LIABILITY: The CONTRACTOR shall conduct his operations in such a manner that no undue hazard will result due to the requirements of this article, and the procedures and policies described therein shall in no way act as a waiver of any of the terms of the liability of the CONTRACTOR or his surety.

F. CONTRACTOR'S Maintenance of Traffic Plan shall maintain continuous vehicular traffic on North River Boulevard at all times. The Contractor shall maintain one lane of traffic at all times during Construction.

G. The Changeable Variable Message Sign shall be used as necessary. The location, message, and duration shall be as directed by ENGINEER.

Item of Payment

Payment for the work specified in this item shall be made under:

Bid Item No. 102 - Maintenance of Traffic – Per Lump Sum

SECTION 104 - PREVENTION, CONTROL, AND ABATEMENT OF EROSION AND WATER POLLUTION

PART 1 – GENERAL

1.1 SCOPE

A. This Section covers erosion control and the treatment of dewatering water and stormwater runoff from the construction site and work area. Pollution control measures shall prevent polluted or turbid waters from being discharged from the construction site or work area to undeveloped portions of the site or offsite, including but not limited to Multiple Separate Storm Sewer Systems (MS4s) and Waters of the State.

B. The CITY OF TAMPA considers pollution from dewatering water and stormwater runoff from a construction site or work area to be a very serious offense. The CONTRACTOR is solely responsible for preventing pollution caused by dewatering water and stormwater runoff from the construction site or work area. Note that state regulations do not allow mixing stormwater and dewatering groundwater in the same release – separate and independent discharges are required.

C. Pollution control measures specified herein represent minimum standards to be adhered to by the CONTRACTOR throughout the Project's construction. The CITY OF TAMPA reserves the right to require the CONTRACTOR to employ additional pollution control measures, when in the sole opinion of the CITY OF TAMPA, they are warranted. If site specific conditions require additional erosion and stormwater pollution control measures during any phase of construction or operation to prevent erosion or to control sediment or other pollution, beyond those specified in the Drawings, the Project's approved Stormwater Pollution Prevention Plan (SWPPP), or herein, implement additional best management practices as necessary, in accordance with Chapter 4, "Best Management Practices for Erosion and Sedimentation Control" of the Florida Erosion and Sediment Control Inspector's Manual and other references as may be applicable or required by regulatory permits.

D. The CITY OF TAMPA may terminate this Contract if the CONTRACTOR fails to comply with this Section. Alternatively, the CITY OF TAMPA may halt the CONTRACTOR's operations until the CONTRACTOR is in full compliance with this Section. If the CITY OF TAMPA halts the CONTRACTOR's Work as a result of failure to comply with this Section, the Contract time clock will continue to run.

E. In addition to these Specifications, comply with Chapter 4 - "Best Management Practices for Erosion and Sedimentation Control" and Chapter 5 – "Best Management Practices for Dewatering" of the Florida Erosion and Sediment Control Inspector's Manual. In the event of a conflict between the referenced chapters and these Specifications, the more stringent requirement shall prevail.

1.2 PERMITS

A. The CITY OF TAMPA has obtained certain permits for this project and they are listed below. The CONTRACTOR must apply for and obtain all other required federal, state, and local permits, licenses, sampling, and tests.

1. U.S. Army Corps of Engineers
2. Florida Department of Environmental Protection
3. Hillsborough County Environmental Protection Commission – Minor Work Permit

B. The CONTRACTOR must provide copies of all approved permits to the CITY OF TAMPA and ENGINEER and comply with all conditions contained in all permits at no extra cost to the CITY OF TAMPA. If there is a conflict between any permit requirement and these Specifications or requirements between permits, the more stringent specification or requirement shall govern.

C. The CONTRACTOR must pay for all required water quality sampling and laboratory tests.

1.3 GENERAL

A. Do not begin any other construction work until the pollution control and treatment system has been constructed in accordance with approved plans, permits, and these Specifications; and the installed system has been examined by the CITY OF TAMPA for compliance.

B. From time to time, the CITY OF TAMPA or ENGINEER will inspect the pollution control and treatment system and may take effluent samples for analysis by a testing laboratory selected and paid for by the CITY OF TAMPA. If at any time, the CITY OF TAMPA or ENGINEER determines that the pollution control and treatment system is not in compliance with the approved system, the CITY OF TAMPA or ENGINEER will shut the portion of the project down that is not in compliance, and it shall remain shut-down until the pollution control and treatment system is properly constructed or repaired, and complies with the approved pollution control and treatment system plans, specifications, contract documents, and permits.

C. The CONTRACTOR shall schedule construction to minimize erosion and stormwater runoff from the construction site. Implement erosion control measures on disturbed areas as soon as practicable in portions of the site where construction activities have temporarily or permanently ceased, but in no case more than 7 days after the construction activity in that portion of the site has temporarily or permanently ceased.

D. Inspect each pollution control system at least once per day and after each rainfall event. Clean and maintain each pollution control system as required until the system is no longer needed. If a water quality violation occurs, immediately cease all work contributing to the water quality violation and correct the problem. Immediately report all water quality violations to the CITY OF TAMPA. Immediately report the discharge of any hazardous substance to the State Warning Point at 800-320-0519 or 850-413-9911.

E. Discharge shall not violate State or local water quality standards in receiving waters, nor cause injury to the public health or to public or private property, nor to the Work completed or in progress. The receiving point for water from construction operations shall be approved by the applicable owner, regulatory agency, and the ENGINEER. The receiving point shall be shown on the Project SWPPP.

F. Promptly repair all damage at no cost to the CITY OF TAMPA.

1.4 SUBMITTALS

A. Shop Drawings: Submit shop drawings of the proposed pollution control and treatment systems.

B. Approved Stormwater Pollution Prevention Plan.

C. "Contractor's Affidavit Regarding Erosion Control and Treatment of Dewatering Water and Stormwater from Construction Activities"

1.5 STORMWATER TREATMENT AND EROSION CONTROL SYSTEM RESPONSIBILITY

A. Prepare a site-specific design of the erosion and stormwater pollution control system. Install and maintain all erosion and stormwater pollution control devices under the supervision of a State Certified Stormwater, Erosion, and Sedimentation Control Inspector. Maintain the erosion and stormwater pollution control devices until in the ENGINEER's sole opinion, the devices are no longer necessary (such time not to extend past the date the CITY OF TAMPA formally accepts the project as complete). Before beginning construction, submit to the City of Tampa, Florida Department of Environmental Protection (FDEP) and other applicable regulatory agencies for review and approval, a Stormwater Pollution Prevention Plan (SWPPP), prepared by the certified erosion control subcontractor. Construction shall not begin until the SWPPP has been approved by the City of Tampa, FDEP, and all applicable regulatory agencies. Submit the approved SWPPP to the ENGINEER before beginning construction. Include in the SWPPP, the "Contractor's Affidavit Regarding Erosion Control and Treatment of Dewatering Water and Stormwater from Construction Activities" (located at the end of this Section).

1.6 "POLLUTION" AND CERTAIN UNCONTESTABLE POLLUTION EVENTS DEFINED

A. With respect to this Section, "pollution" is the presence in off-site waters of any substances, contaminants, or manmade or human-induced impairment of off-site waters or alteration of the chemical, physical, biological, or radiological integrity of off-site water in quantities or at levels which are or may be potentially harmful or injurious to human health or welfare, animal or plant life, or property. Pollutants to be removed include but are not limited to, sediment and suspended solids, solid and sanitary wastes, phosphorus, nitrogen, pesticides, oil and grease, concrete truck washout, stucco mixer washout, curb machine washout, washout from other construction equipment, construction chemicals, and construction debris.

J. When the Discharge is Directly into an Existing Water Body

An existing water body (including ditches and canals) is defined to be polluted by the CONTRACTOR's operations when at any time, the turbidity of the water immediately downstream of the CONTRACTOR's discharge point(s) is at least 29 nephelometric turbidity units (NTUs) higher than the turbidity of the background water upstream of the discharge point(s). [See Fla. Administrative Code 62-302.530]. Exception: When the discharge is directly into or through an outfall discharging into "Outstanding Florida Waters," designated by Florida Statute 403.061(27), the turbidity of the discharged water cannot exceed the turbidity of the immediate receiving water. The ENGINEER or CITY OF TAMPA shall determine the locations where the turbidity is measured.

K. When the Discharge is not Directly into an Existing Water Body

In some instances, dewatering water or stormwater runoff from the construction site or work area may reach a water body indirectly, such as by overland flow. If the discharge water's TSS and turbidity measurements exceed pre-construction

background values by 20 percent for TSS and 29 NTUs for turbidity, then the discharge is defined to be polluted.

L. When Pollution Always Occurs

The discharge from a construction site or work area is defined to be polluted whenever the pH of the discharge is less than 6.5 or greater than 8.5, or whenever any of the following is present in the discharge water:

(1) Hazardous waste or hazardous materials in any quantity,
(2) Any petroleum product or by-product in any quantity,
(3) Any chemical in any quantity, or
(4) Concentrated pollutants.

E. Above paragraphs do not in any way, limit the types of conditions in which pollution may be determined to occur.

1.7 PENALTIES FOR NONCOMPLIANCE WITH THIS SECTION

A. In addition to the CITY OF TAMPA's specific remedies, if erosion or pollution is caused by dewatering water or stormwater runoff from the construction site, the CITY OF TAMPA may report the violations to the SWFWMD, FDEP as appropriate, and other pertinent regulatory or enforcement agencies.

PART 2 - MATERIALS AND INSTALLATION

2.1 GENERAL

A. Staked Silt Fences:

1. General: Use silt fences to control runoff from the construction site where the soil has been disturbed.
2. Installation: Install per the manufacture's recommendations and as specified herein. In general, install the silt fence in a manner that allows it to stop the water long enough for the sediment to settle while the water passes through the silt fence fabric. All supporting posts shall be on the down-slope side of the fencing. Place the bottom of the fabric 6-inches minimum, under compacted soil to prevent the flow of sediment underneath the fence. Place silt fences away from the toe of slopes. Otherwise, work shall conform to Section 104 of the Florida Department of Transportation Standard Specifications for Road and Bridge Construction.
3. Product: All material shall be new and unused. Use FDOT Types III through IV silt fences where large sediment loads are anticipated, where slopes are 1:2 (vertical: horizontal) or steeper, or as directed by the ENGINEER; otherwise use FDOT Type II silt fence.

B. Turbidity Barriers:

1. General: Use turbidity barriers to control sediment contamination of rivers, lakes, ponds, canals, etc.

2. Installation: Install per the manufacturer's recommendations and per Section 104 of the Florida Department of Transportation Standard Specifications for Road and Bridge

Construction unless directed otherwise by the ENGINEER. Under Bid Item 104-2, the CONTRACTOR shall install, maintain, and remove floating turbidity barriers to contain turbidity that may occur as the result of construction activities. As shown on the Drawings, the CONTRACTOR shall place the floating turbidity barrier prior to construction in 100' – 200' segments, which shall be removed at the end of each day. The CONTRACTOR may need to deploy turbidity barriers around isolated areas of concern. The CITY OF TAMPA will identify such areas. Install the barriers in accordance with the details shown in the plans or as approved by the CITY OF TAMPA and or ENGINEER. Ensure that the type barrier used and the deployment and maintenance of the barrier will minimize dispersion of turbid waters from the construction site. The CITY OF TAMPA may approve alternate methods or materials.

Operate turbidity barriers in such a manner to avoid or minimize the degradation of the water quality of the surrounding waters.

3. Product: All material shall be new and unused. The turbidity barrier shall be a pervious barrier and the fabric color shall be yellow. Use staked turbidity barriers in water less than one-foot deep. Use floating turbidity barriers in water one-foot or deeper.

PART 3 - EXECUTION

A. Design, construct, and maintain the pollution control and treatment system to minimize erosion and capture and remove pollutants from the construction site and from all other areas disturbed by construction activities.

B. Turbidity curtains shall be removed each day to eliminate the ability for entanglement by manatees, sea turtles or smalltooth sawfish

C. REPAIR ALL EROSION DAMAGE – At no additional cost to the CITY OF TAMPA and regardless of the state of completion of the Work, immediately clean all dirt and debris from all pipes and drainage structures; and repair all flooding, washouts, and all other erosion damage to the Work. This responsibility shall not end until Final Acceptance of the Work by the CITY OF TAMPA. Included is damage caused by erosion of any kind (e.g. wind, waves, stormwater runoff, hurricanes, etc.) including Acts of God. Restore all erosion damaged areas to design grades and elevations.

Item of Payment

Payment for the work specified in this item shall be made under:

Bid Item No. 104-1– Silt Fence - Per Linear Foot
Bid Item No. 104-2 – Floating Turbidity Barrier – Per Linear Foot

SECTION 110 - CLEARING AND GRUBBING

The work specified in this item shall conform to Section 110 of the Florida Department of Transportation Standard Specifications for Road and Bridge Construction with the following modifications:

A. Prior to any clearing and grubbing, the contractor will stake the right-of-way. Unimproved areas shall be cleared of trees, logs, stumps, brush, vegetation, rubbish and other perishable or objectionable matter within limits shown on the plans excepting for certain trees and shrubs shown on the plans or as directed by the Engineer which are to remain undisturbed and protected. Stumps and roots between slope stakes in cuts and in embankments 3 feet or less in depth shall be removed to a depth of 18 inches below subgrade. No stumps, roots, or perishable matter of any description shall remain under concrete slabs or footing, including pavement and sidewalks.

B. No trees shall be removed or relocated until the ENGINEER or his representative has marked all trees to be saved, after a review of the project site with the CONTRACTOR'S representative.

C. Where the final pavement or structural work will be close to existing trees, the CONTRACTOR shall exercise care in the vicinity of the trees (see Tree Protection Details, Sheet C-25) Further, the CONTRACTOR shall saw cut along the edge of the outside limits of the stabilization, structure subgrade or sidewalk to a minimum depth of 4 feet below the finish grade and paint with a commercial grade pruning paint the ends of all sawn roots. If directed by the Engineer or where shown on the drawings, work shall be done by hand in order to protect the trees.

D. The CONTRACTOR shall exercise care when working in the vicinity of all trees to remain so as to not damage or remove major root structures. The CONTRACTOR shall not pull hair or major root structures. All severed roots shall be sawn clean and paint with pruning paint. Stumps, roots, etc., shall be completely removed and disposed of by the CONTRACTOR. Undesirable, dead, and/or damaged trees (as so designated by the ENGINEER) shall be removed.

E. All trees to be removed shall be disposed offsite; burning will be strictly prohibited.

F. All trees or shrubs which are to remain shall be preserved and protected by the CONTRACTOR. Where the removal of valuable trees or shrubs specifically for transplanting is required, this work shall be done in cooperation with the CITY OF TAMPA and at no additional expense to the City.

G. All items to be removed shall be excavated to their full depth. All metal castings for catch basins, manholes, or other structures shall be carefully removed and stored in the City's Storage Yard if they are deemed salvageable by the ENGINEER. The excavated materials shall be removed from the job site and disposed in a location designated or approved by the CITY OF TAMPA. Any culverts, structures or any material excavated or removed from the project site under clearing and grubbing

deemed unsalvageable by the ENGINEER shall be disposed of in a legal manner by the CONTRACTOR. Where required, suitable material as approved by the ENGINEER shall then be backfilled and compacted to restore the original contour of the ground. The fill material shall be backfilled and compacted in accordance with Section 120 of these specifications.

H. No additional payment will be made, nor will additional work, or change orders be authorized for work needed to remove, relocate, protect, or otherwise account for in the construction of the work depicted in the plans, for any feature, or item that would be apparent from a careful inspection of the site and review of the plans, even though such feature or item is not specifically called out in the plans. It is therefore essential the contractor make such inspection and review.

I. The unit price bid for this item shall include the cost of all labor, tools, and equipment necessary to excavate, remove, and dispose of those items as directed by the Engineer and where designated on the Drawings. The cost of restoration and backfill and compaction for the specific area of removal shall also be included under this item.

Item of Payment

Payment for the work specified in this item shall be made under:

Bid Item No. 110 - Clearing and Grubbing – Per Lump Sum

SECTION 120 - EXCAVATION AND EMBANKMENT

Earthwork shall be paid for as excavation and embankment. Cost shall include all work specified in this section and Section 120 of the FDOT Standard Specifications for Road and Bridge Construction. Such price and payment shall specifically include all cost of any roadway, lateral ditch or canal, and final dressing operations. Excavator will be utilized in the maintenance dredge and re-contouring of the ditch and the slope embankment. Fill can be used from the immediate project area with approval of the CITY OF TAMPA and the ENGINEER. Native vegetation existing along the periphery of the embankments that does not need to be removed for access to the embankment shall remain. All work shall be in accordance with the Plans, Specifications and requirements set forth within the Contract and conducted in accordance with all federal, state and local permits and authorizations issued for this Project.

a. Access to Work Areas.
All work areas in this project are tidal in nature. The CONTRACTOR should be prepared isolate the work from the tidal water exchange during excavation and grading. The purpose of this project is restoration and the CITY OF TAMPA would like as little impact to natural resources as possible, therefore resource protection procedures during excavation must be approved by the ENGINEER and the CITY OF TAMPA.

b. Allowable Vertical Tolerance of Excavation.

Final design elevations must be within 0.2 feet of design grade with no more than 60% of grade shots being either below or above the target grade for that location.

c. Disposal of debris and obstructions.
Debris, such as vegetation, trees, stumps, roots, logs, rocks, bedrock, concrete, asphalt, wood, trash, garbage, unusable soil, metal and any other objects except archeological or historic resources that are unearthed during the excavation operations, shall be removed, transported, and properly disposed of at an approved location. If archeological or historic resources are encountered the CONTRACTOR shall notify the CITY OF TAMPA immediately and stop work until directed to restart. Removal and disposal of debris and obstructions shall not be provided for separately for payment. All costs associated with the required disposal of debris shall be included in the Contract Price for Excavation, (Regular Excavation). These specifications are not an all-inclusive reference of debris types, which may be encountered during this excavation.

d. Compaction of Material.
Embankment areas above the Mean High Water Line shall be filled in 12 inch lifts, and compacted to a minimum of 95% of the Modified Proctor Maximum Dry density in accordance with ASTM D-1557. The CONTRACTOR shall hire a geotechnical firm acceptable to the CITY OF TAMPA to perform one density test per lift in accordance with ASTM D-2922.

B. Earthwork quantities shall be considered as in-place material with no shrinkage or expansion factors.

C. Subsoil Excavation - Contractor shall coordinate with CITY OF TAMPA/ENGINEER prior to any subsoil excavation.

D. Embankment - General Requirements for Embankment Materials:

If the material excavated from the ditch onsite is less volume than that required for fill, or if a portion of the ditch material is not suitable for reuse onsite, then the CONTRACTOR should supplement with suitable upland fill approved by the CITY OF TAMPA and ENGINEER meeting the following criteria:

Roadway Design Standard Index No. 505, Embankment Utilization Details is modified by the addition of the following:

Any stratum or stockpile or soil which contains obvious pockets of highly organic material may be designated as muck or unsuitable for construction of subgrade by the CITY OF TAMPA.

Backfill material containing more than 5.0% by weight of organic material, as determined by FM 1-T 267 and by averaging the test results for three randomly selected samples from each stratum or stockpile of a particular material, shall not be used in construction of the reinforced volume. If an individual test value of the three samples exceeds 8.0%, the stratum or stockpile will not be suitable for construction of the reinforced volume.

No A-8 material permitted in embankment.

E. Payment shall be made under:

Bid Item No. 120-1 – Excavation, Regular (Roadway) – Per Lump Sum
Bid Item No. 120-6 – Embankment (Compacted in Place) - Per Lump Sum

SECTION 120-1100 - GRADING

Grading shall be for upland (above the Mean High Water Line) areas only. Grading will be to the elevations shown on the Plans and shall be verified complete by as-built survey prior to planting and/or sodding. Final design elevations must be within 0.2 feet of design grade with no more than 60% of grade shots being either below or above the target grade for that location.

A. Payment shall be made under:

Bid Item No. 120-1100 – Grading– Per Lump Sum

430-400 FLARED END SECTION

The CONTRACTOR shall install two (2) flared end sections.

The work specified under this Section consists of the furnishing and installation of pipe culvert flared end sections, in accordance with the requirements of Sections 346, 400, 415 and 430 of the FDOT Specifications, latest edition, as amended herein, all applicable drawings of the FDOT Standard Plans, latest edition, and the details and notes shown in the Plans.

A Class II surface finish must be applied as directed by the ENGINEER.

The work specified under this Section must include all forms, bracing, concrete, reinforcing steel, grates and other required materials and accessories, all clearing and grubbing, excavation, backfilling, disposal of surplus material, and any other incidental work required to complete the installation of the end sections to the satisfaction of the Engineer.

Ownership of all suitable material must remain with the CITY OF TAMPA until all earthwork
requirements for the project have been fulfilled. Except as otherwise provided for in the contract for the project, all surplus material and other items not claimed by the CITY OF TAMPA must become the property of the CONTRACTOR and must be disposed of by the CONTRACTOR in off-site areas provided by the CONTRACTOR.

A. Payment shall be made under:

Bid Item No. 430-400 – FLARED END SECTION – Per Each

SECTION 530-1 - RIPRAP (RUBBLE)

Under Bid Item 530-1, the CONTRACTOR shall furnish, deliver and place clean rock riprap and filter fabric to the site. Rubble riprap shall consist entirely of broken limestone conforming to the following requirements:

a. The material shall be sound and durable quality stone, and shall have a minimum specific gravity of 2.3 (density of 140 pcf).
b. The faces of individual pieces of stone shall be roughly angular, not rounded, in shape.
c. The least dimension of each stone shall not be less than one-third (1/3) of the greatest dimension of that stone.
d. Stones shall be of a graded mixture, with individual pieces weighing, in general, from 180 pounds to 550 pounds each.
e. At least 97% of the material by weight is smaller than 550 lbs. and at least 50% of the material by weight is greater than 350 lbs. and at least 85% of the material by weight is greater than 180 pounds. The thickness of stones shall not exceed 2.0 ft. (24 inches).
f. A sample of the rip rap material shall be provided to the ENGINEER for approval prior to CONTRACTOR staging on site.
g. ENGINEER has the option to reject any rip rap material either in the staging area or placed on the breakwater. Proper disposal of any rejected material and costs associated with disposal shall be the responsibility of the CONTRACTOR.
h. Rip rap stone shall be free of loose sediment, rebar, steel, wood, and other construction debris.
i. Site Preparation: The CONTRACTOR is responsible for any site preparation required of the base prior to the installation of the riprap, including but not limited to removing trash, grading, minimal dredging/excavation, leveling, compaction, etc. If the CONTRACTOR encounters soft or unexpected sediments along the base that may cause instability in the placement of the revetment the CONTRACTOR shall notify the CITY OF TAMPA and ENGINEER immediately.

The riprap shall be placed and arranged to form compact layers conforming to the neat lines called for in the Plans, and to the thickness' specified, plus or minus six (6) inches. The riprap shall be placed in a manner such that the smaller pieces are evenly distributed and placed so as to fill the voids between the larger pieces, and in a manner to avoid sharp exposed edges. No material may be placed outside the footprint of the structure as shown on the drawings without prior written approval of the ENGINEER.

Interlocking of Stones: Stones shall be placed in such a manner that they will be properly interlocked with the adjacent stones to resist displacement by wave action and form a uniform and compact section. Each stone shall be firmly set and well-supported by underlying material and adjacent stone with a minimum of four points of contact.

Excessive Material Placement: Material placement from beyond the Project limits as specified on the Contract Drawings shall be considered excessive material for which payment will NOT be made. The CONTRACTOR shall be responsible for all federal,

state, and local regulatory permits, implications, violations and/or fees as a result of such work.

Misplaced Project Materials: Any project materials deposited at locations other than as designated or approved by the CITY OF TAMPA shall be considered misplaced material and shall NOT be paid for until the CONTRACTOR, at their expense, removes and replaces such misplaced material to an approved location. This required removal and replacement of misplaced material and any necessary restoration work shall not be the basis for a time extension or additional compensation under this Contract.

Transport/Delivery: The CONTRACTOR shall transport material to the construction site by truck or barge. No overflow or spill-out of fill shall be permitted during transport to the fill site. All trucks shall be covered in order to prevent spillage. Failure to modify those methods of operation which are resulting in spillage during transport will result in suspension of transport operations and shall require prompt repair or change of operations so as to prevent spillage as a prerequisite to resumption of transport operations.

Measurement and Payment of Fill Quantities: The CONTRACTOR shall load and weigh (before and after loading) the trucks used to transport the material from the pit to the construction site. The trucks shall be weighed empty, loaded with rock material and weighed full in a location that is easily accessible and will cause no delay in the transport of the rock material to the construction site. The CONTRACTOR shall have available such equipment as will be necessary to collect the material, store the material, load the transport trucks and weigh the trucks full and empty, without interruption. The scales used for weighing the trucks shall be certified by The Florida Department of Transportation. The CONTRACTOR shall provide a “weight ticket” for each truckload citing the net weight of material in the truck and the date of delivery; these tickets will be the basis for final payment to the CONTRACTOR under Bid Item 2. During construction, by 10 a.m. each day, the CONTRACTOR will provide to the CITY OF TAMPA a daily log including (1) a summary table of all truckloads of material delivered to the site during the prior day including the net weight and the location of delivery (the survey stationing along the shoreline construction, i.e. STA.5+00) for each truckload or barge load, and (2) the total tonnage of material delivered through the prior day. With the CONTRACTOR’s requests for payment under this bid item, the CONTRACTOR shall provide the CITY OF TAMPA with copies of all yard tickets that shall be the basis of payment.

Payment for rock material shall be made on the basis of the quantity (tons) of material placed within the limits of the project as measured by the weight tickets for each truckload, as reported by the CONTRACTOR, and as verified by the CITY OF TAMPA through review of weight tickets and measurements of the material placement area.

Payment for all materials and labor shall be made by the CITY OF TAMPA to the CONTRACTOR according to the unit prices indicated on the Bid Schedule for materials actually used in the construction and accepted by the CITY OF TAMPA and ENGINEER. The CITY OF TAMPA may increase or decrease quantities prior to materials actually being used by the CONTRACTOR for construction and performance of the work; the unit prices cited on the CONTRACTOR’s Bid Schedule shall remain valid for adjustments in

quantities by the CITY OF TAMPA equivalent to up to 25% of the Total Cost cited on the CONTRACTOR's Bid Schedule.

Unsuitable Material: All material furnished under this Agreement must comply with these Technical Provisions and any deviation from this specification may result in a material breach of the Agreement. Any material that the CONTRACTOR provides, which does not meet this specification, shall be removed and replaced at the CONTRACTOR's expense. The material may be collected and tested by the CITY OF TAMPA periodically throughout the construction project. In the event that unsuitable material is detected as part of these procedures, the CONTRACTOR will immediately stop furnishing such material and shall be responsible for immediately removing the unsuitable material prior to any further construction. Any unsuitable material shall be removed at the expense of the CONTRACTOR in a manner approved by the CITY OF TAMPA. Burial of material that does not conform to these specifications is prohibited.

A. Payment shall be made under:

Bid Item No. 530-1 – RIPRAP (RUBBLE 2.0 ft. dia. Limestone) – Per Ton

SECTION 530-2 – ARMOR STONE

Under Bid Item 530-2, the CONTRACTOR shall furnish, deliver and place clean rock p and filter fabric to the site. Armor stone shall consist entirely of broken limestone conforming to the following requirements:

a. The material shall be sound and durable quality stone, and shall have a minimum specific gravity of 2.3 (density of 140 pcf).
b. The faces of individual pieces of stone shall be roughly angular, not rounded, in shape.
c. The least dimension of each stone shall not be less than one-third (1/3) of the greatest dimension of that stone.
d. Stones shall be of a graded mixture, with individual pieces weighing, in general, from 350 pounds to 925 pounds each.
e. At least 97% of the material by weight is smaller than 925 lbs. and at least 50% of the material by weight is greater than 585 lbs. and at least 85% of the material by weight is greater than 350 pounds. The thickness of stones shall not exceed 3.0 ft. (36 inches).
f. A sample of the armor stone material shall be provided to the ENGINEER for approval prior to CONTRACTOR staging on site.
g. ENGINEER has the option to reject any armor stone material either at the borrow pit, in the staging area or placed on the breakwater. Proper disposal of any rejected material and costs associated with disposal shall be the responsibility of the CONTRACTOR.
h. Armor stone shall be free of loose sediment, rebar, steel, wood, and other construction debris.
i. Site Preparation: The CONTRACTOR is responsible for any site preparation required of the base prior to the installation of the armor stone, including but not limited to removing trash, grading, minimal dredging/excavation, leveling, compaction, etc. If the CONTRACTOR encounters soft or unexpected

sediments along the base that may cause instability in the placement of the breakwater, the CONTRACTOR shall notify the CITY OF TAMPA and ENGINEER immediately.

The armor stone shall be placed and arranged to form compact layers conforming to the neat lines called for in the Plans, and to the thickness' specified, plus or minus six (6) inches. The armor stone shall be placed in a manner such that the smaller pieces are evenly distributed and placed so as to fill the voids between the larger pieces, and in a manner to avoid sharp exposed edges. No material may be placed outside the footprint of the structure as shown on the drawings without prior written approval of the ENGINEER.

Interlocking of Stones: Stones shall be placed in such a manner that they will be properly interlocked with the adjacent stones to resist displacement by wave action and form a uniform and compact section. Each stone shall be firmly set and well-supported by underlying material and adjacent stone with a minimum of four points of contact. Armor stone placement will require an excavator with a thumb (or equivalent machinery) to manipulate each stone for proper fitment into the existing breakwater. Material will not be dumped or dropped from a height greater than 2 feet.

Excessive Material Placement: Material placement from beyond the Project limits as specified on the Contract Drawings shall be considered excessive material for which payment will NOT be made. The CONTRACTOR shall be responsible for all federal, state, and local regulatory permits, implications, violations and/or fees as a result of such work.

Misplaced Project Materials: Any project materials deposited at locations other than as designated or approved by the CITY OF TAMPA shall be considered misplaced material and shall NOT be paid for until the CONTRACTOR, at their expense, removes and replaces such misplaced material to an approved location. This required removal and replacement of misplaced material and any necessary restoration work shall not be the basis for a time extension or additional compensation under this Contract.

Transport/Delivery: The CONTRACTOR shall transport material to the construction site by truck or barge. No overflow or spill-out of fill shall be permitted during transport to the fill site. All trucks shall be covered in order to prevent spillage. Failure to modify those methods of operation which are resulting in spillage during transport will result in suspension of transport operations and shall require prompt repair or change of operations so as to prevent spillage as a prerequisite to resumption of transport operations.

Measurement and Payment of Fill Quantities: The CONTRACTOR shall load and weigh (before and after loading) the trucks used to transport the material from the pit to the construction site. The trucks shall be weighed empty, loaded with rock material and weighed full in a location that is easily accessible and will cause no delay in the transport of the rock material to the construction site. The CONTRACTOR shall have available such equipment as will be necessary to collect the material, store the material, load the transport trucks and weigh the trucks full and empty, without interruption. The scales used for weighing the trucks shall be certified by The Florida Department of

Transportation. The CONTRACTOR shall provide a “weight ticket” for each truckload citing the net weight of material in the truck and the date of delivery; these tickets will be the basis for final payment to the CONTRACTOR under Bid Item 2. During construction, by 10 a.m. each day, the CONTRACTOR will provide to the CITY OF TAMPA a daily log including (1) a summary table of all truckloads of material delivered to the site during the prior day including the net weight and the location of delivery (the survey stationing along the shoreline construction, i.e. STA.5+00) for each truckload or barge load, and (2) the total tonnage of material delivered through the prior day. With the CONTRACTOR’s requests for payment under this bid item, the CONTRACTOR shall provide the CITY OF TAMPA with copies of all yard tickets that shall be the basis of payment.

Payment for rock material shall be made on the basis of the quantity (tons) of material placed within the limits of the project as measured by the weight tickets for each truckload, as reported by the CONTRACTOR, and as verified by the CITY OF TAMPA through review of weight tickets and measurements of the material placement area.

Payment for all materials and labor shall be made by the CITY OF TAMPA to the CONTRACTOR according to the unit prices indicated on the Bid Schedule for materials actually used in the construction and accepted by the CITY OF TAMPA and ENGINEER. The CITY OF TAMPA may increase or decrease quantities prior to materials actually being used by the CONTRACTOR for construction and performance of the work; the unit prices cited on the CONTRACTOR’s Bid Schedule shall remain valid for adjustments in quantities by the CITY OF TAMPA equivalent to up to 25% of the Total Cost cited on the CONTRACTOR’s Bid Schedule.

Unsuitable Material: All material furnished under this Agreement must comply with these Technical Provisions and any deviation from this specification may result in a material breach of the Agreement. Any material that the CONTRACTOR provides, which does not meet this specification, shall be removed and replaced at the CONTRACTOR’s expense. The material may be collected and tested by the CITY OF TAMPA periodically throughout the construction project. In the event that unsuitable material is detected as part of these procedures, the CONTRACTOR will immediately stop furnishing such material and shall be responsible for immediately removing the unsuitable material prior to any further construction. Any unsuitable material shall be removed at the expense of the CONTRACTOR in a manner approved by the CITY OF TAMPA. Burial of material that does not conform to these specifications is prohibited.

A. Payment shall be made under:

Bid Item No. 530-2 – ARMOR STONE (3.0 ft. dia. Limestone) – Per Ton

SECTION 580 - LANDSCAPE

This section pertains to the planting of Smooth cordgrass (*Spartina alterniflora*), Marsh hay cordgrass (*Spartina patens*), Sand cordgrass (*Spartina bakeri*), Muhly grass (*Muhlenbergia capillaris*), Dune sunflower (*Helianthus debilis*), Softstem bulrush (*Schoenoplectus tabermontani*), Saltmarsh bulrush (*Bolboschoenus robustus*), Black rush (*Juncus roemerianus*), Herb-of-grace (*Bocopa monnieri*) species:

a. Handle and transport plants so that roots and root balls are adequately protected from breakage, from sun or drying winds. Ensure tops of roots or plants are not permitted to desiccate.
b. Protect tops of plants from damage. Damaged plants will be rejected.
c. Plant species when there are sufficient moisture conditions, or alternatively provide sufficient water immediately after installation to ensure proper establishment.
d. Plants are to be installed within 24 hours of delivery and only after acceptance of the planting areas by the ENGINEER.
e. Material shall be installed at the soil/sediment depths at which it was grown.
f. Indicate locations of plant installations for approval of the ENGINEER prior to installation.
g. CONTRACTOR is required to maintain and provide sufficient water to the plantings during the 90-day establishment period to ensure plant establishment. Maintenance is intended to prevent nuisance or exotic species from becoming established within the planting zones during any portion of the establishment period.
h. The CONTRACTOR shall be responsible for the labor and materials to replace existing and installed vegetation that may be damaged during the maintenance and watering activities.

Bid Item No. 580-1 – Landscape (Smooth cordgrass – 2”) – Per Each
Bid Item No. 580-2 – Landscape (Marsh hay cordgrass – 2”) – Per Each
Bid Item No. 580-3 – Landscape (Sand cordgrass – 4”) – Per Each
Bid Item No. 580-4 – Landscape (Muhly grass – 4”) – Per Each
Bid Item No. 580-5 – Landscape (Dune sunflower – 2”) – Per Each
Bid Item No. 580-6 – Landscape (Softstem bulrush – 2”) – Per Each
Bid Item No. 580-7 – Landscape (Saltmarsh bulrush – 2”) – Per Each
Bid Item No. 580-8 – Landscape (Black rush – 2”) – Per Each
Bid Item No. 580-9 – Landscape (Herb-of-grace – 2”) – Per Each

SECTION 901 – COARSE AGGREGATE – BEDDING STONE (3-5”)

The CONTRACTOR shall furnish and install a Coarse Aggregate - Bedding Stone of either a durable quality limestone or other quarry run stone, with a bulk specific gravity of not less than 1.90 and that is reasonably free from thin, flat and elongated pieces. Ensure that the bedding stone is also reasonably free from organic matter and soft, friable particles. Meet the following gradation limits:

Standard Sieve Sizes	Individual Percentage by Weight Passing
6 inches	100
4 inches	50 to 100
2 inches	15 to 50
1 inch	0 to 15

In lieu of limestone or other quarry run stone, the Contractor may substitute non-reinforced concrete.

Bid Item No. 901– Coarse Aggregate – Bedding Stone (3”-5”) - Per Ton

SECTION 985-1 - GEOSYNTHETIC FABRIC

The CONTRACTOR shall furnish and install a geotextile fabric after grading of the embankment and prior to installation of the Rip Rap. The geotextile material shall be Mirafi 404 (Tencate), or FDOT D-4 equivalent as approved by the CITY OF TAMPA and ENGINEER. Geotextile Fabric shall be installed per manufacturer’s recommendations and keyed in at the top of slope extend from the top of bank down to the toe of slope, underneath the placement of the Rip Rap.

Bid Item No. 985-1 – Geosynthetic Materials (Filter Fabric) - Per Square Foot

SECTION 985-2 - EROSION CONTROL BLANKET

The CONTRACTOR shall furnish and install an erosion control blanket after grading of the embankment and prior to installation of plantings. The erosion control blanket shall be North American Green EroNet SC-150, or equal, with a 2-year longevity, as approved by the CITY OF TAMPA and ENGINEER. The Erosion Control Blanket shall be installed per manufacturer’s recommendations and keyed in at the top of slope extend from the top of bank down to the toe of slope, on top of the graded and compacted slope. Staking should be installed with biodegradable stakes and doubled along the bottom edge. Plantings shall be installed through the blanket.

Bid Item No. 985-2 – Geosynthetic Materials (Coconut Jute Material) - Per Square Foot

SECTION 999 - RECORDS/AS-BUILTS

GENERAL

Maintain, prepare and provide the ENGINEER with record documents as specified below, except where otherwise specified or modified within the scope of work provided in the specific project contract documents. The Contractor and/or Developer shall be responsible for, and required to provide, Record Drawings as outlined in this section.

MAINTENANCE OF RECORD DOCUMENTS:

1. Maintain in CONTRACTOR's field office in clean, dry, legible condition complete sets of the following project documents: Drawings, Specifications, Addenda, approved Shop Drawings, samples, photographs, Change Orders, other modifications of Contract Documents, test records, survey data, Field Orders, and all other documents pertinent to CONTRACTOR'S Work.

2. Provide files and racks for proper storage and easy access.

3. Make documents available at all times for inspection by ENGINEER and CITY OF TAMPA.

4. Do not use record documents for any other purpose and do not remove them from the field office.

5. Label each document "RECORD DRAWING" in 2-inch high printed letters.

6. Keep record documents current at all times.

7. No work shall be permanently concealed until the required record data has been obtained.

RECORD / AS-BUILT DRAWINGS

A. During the construction operation, the CONTRACTOR shall maintain records of all deviations from the approved Project Plans and Specifications and shall prepare therefrom “RECORD” drawings showing correctly and accurately all changes and deviations from the work made during construction to reflect the work as it was actually constructed.

B. The Record/As-Built survey shall be performed and subsequent plans prepared by a Professional Surveyor and Mapper, registered in the state of Florida and certified to the standards set forth in Chapter 472, Florida Statutes and Chapter 5J-17.050 Florida Administrative Code (Florida Minimum Technical Standards).

C. Field measurements of vertical or horizontal dimensions of constructed improvements shall be obtained so that the constructed facility can be delineated in such a way that the location of the construction may be compared with the construction plans. Clearly shown by symbols, notations, or delineations, those constructed improvements located by the survey.

D. All vertical information (elevations) provided on the Record Drawings shall be referenced to the North American Vertical Datum of 1988 (NAVD 88) unless otherwise specified by the Project Engineer.

E. The horizontal information provided on the Record Drawings shall be referenced to the State of Florida, State Plane Coordinate System, Florida East Zone as established by Global Positioning System (GPS) which meets or exceeds Third Order Class I Accuracy Standards according to current publication of the Federal Geodetic Control Committee (FGCC) procedures.

F. All Record/As-Built drawings shall be prepared in digital format (ACAD Civil 3D 2013) and shall utilize the digital design drawings as prepared by the Project ENGINEER as a base for the Record/As-Built drawings. It is the responsibility of the Surveyor to request these files from the Contractor or Project CITY OF TAMPA in order to produce the Record/As-Built drawing set.

G. ALL improvements proposed to be constructed as shown on the approved construction

plans shall be field measured upon completion and shown on the Record/As-Built survey. Any improvements that appear in both plan and profile views shall show the Record/As-Built information in both views.

H. The following items are required to be shown on all City of Tampa project Record/As-Built drawings submitted to the CITY OF TAMPA:

DRAINAGE:

1. Right-of-way Swale/Drainage – All culvert inverts, elevations and station offsets; inlet grate and bottom elevations; swale beginning and end bottom elevations; and highs and lows along top of bank. Size of swale.

2. Pipe Culvert/PVC Sleeves – All inverts, pipe size, stations and offsets.

3. Outfalls – All pipe inverts, pipe size, elevations and station offsets, weir box elevations, weir elevation, bleeder elevation and sizes.

4. Roadway/Off Site Drainage – All inverts, elevations and station offsets; manhole top elevation; grate top elevations.

5. Retention Ponds – Provide perimeter elevations, grade breaks, depths and calculated pond areas at control elevation and grade breaks above and below water surface. Show as-built of typical cross section as shown on design plan.

ROADWAY:

1. Stations and offsets related to controlling baseline and elevations of all structures, side street and major driveway radius returns (edge of pavement), bends and/or change in direction of roadway alignment, minimum of 1000' intervals along roadway alignment.
2. Elevations along Profile Grade Line (PGL), of all edge of pavements on each side of Profile Grade Line (PGL), at medians at the high/low and PVI points along Profile Grade Line (PGL).
3. All final Elevations to be plotted on PGL AND Plan & Profile sheets as applicable.
4. Elevations of edge of pavement and flow line at curb inlets and on the adjacent edge of pavement at curb inlets.

SURVEY CONTROL

1. Install/re-establish: It shall be the contractor's responsibility to hire a Professional Surveyor and Mapper as defined per Chapter 472, Florida Statutes, to replace any horizontal and vertical control shown on the engineering plans that was destroyed during construction.

2. New control points (survey baseline or controlling line and all points as indicated on the plans or control sheet) upon final completion. State plane coordinates and elevations for all control points.

3. If shown on plans or not: Any Public Land Corner or Governmental Survey Control point(s), vertical control (bench marks), property corners destroyed and/or disturbed during the scope of the project shall be properly re-established as per standards as set forth within Florida Statutes, Administrative code and Minimum Technical Standards for that type of survey. All said surveying mentioned above shall be performed under the direct supervision of a registered Professional Surveyor and Mapper in the state of Florida and certified accordingly. Said Governmental agency(s) shall be notified in writing of disturbance and re-establishments.

RECORD/AS-BUILTS DRAWINGS FORMAT - SUBMITTAL

A. ENGINEER will supply the CONTRACTOR with the electronic file of the approved construction plans for the input of the As-Built (record) information.

B. CONTRACTOR shall deliver seven (7) certified sets of Record/As-Builts with Electronic Drawing files prepared in AutoCAD Civil 3D 2013 and PDF format or in current version as agreed by the ENGINEER.

C. CONTRACTOR's surveyor shall review, sign and seal As-Builts or Record drawing(s). Said drawing(s) shall clearly state type of survey, positional tolerances, adhere and be certified to by a registered Professional Surveyor and Mapper in the state of Florida, any standards set forth by Florida Statutes, Administrative code and Minimum Technical Standards for As-Built/Record surveys.

D. All Record/As-Built drawings are subject to review and approval by the CITY OF TAMPA'S Surveyor.

ACCURACY

The CONTRACTOR will be held responsible for the accuracy and completeness of Record Drawings and Electronic As-Builts and shall bear any costs incurred in finding utilities as a result of incorrect data furnished by the CONTRACTOR.

COMPLETION OF WORK

Upon Substantial Completion of the Work, deliver Record Drawings/As-Built Drawings to ENGINEER. Final payment will not be made until satisfactory record documents are received and approved by ENGINEER.

Item of Payment

Payment for the work specified in this item shall be made under:

Bid Item No. 999 – Record Drawings/As-Builts – Per Lump Sum

DEPARTMENT OF THE ARMY
CORPS OF ENGINEERS, JACKSONVILLE DISTRICT
701 SAN MARCO BOULEVARD
JACKSONVILLE, FLORIDA 32207-8915

REPLY TO ATTENTION OF

July 12, 2019

Regulatory Division
West Permits Branch
Tampa Permits Section
SAJ-2018-03656 (NW-LEO)

City of Tampa Parks and Recreation Department
Attn: Paul Dial
3401 W. Columbus Dr.
Tampa, FL 33607
Email: paul.dial@tampagov.net

Dear Applicant:

The U.S. Army Corps of Engineers (Corps) assigned your application for a Department of the Army permit, which the Corps received on May 16, 2019, the file number SAJ-2018-03656. A review of the information and drawings provided indicates that the proposed work involves rehabilitating existing breakwater and Hillsborough Avenue bridge footer; conducting bank stabilization activities; and restoring wetlands. See enclosed project plans. Project would affect waters of the U.S. associated with the Hillsborough River. Project is located at Ignacio Haya Linear Park, 5108-5100 N. River Blvd., Tampa in Section 01, Township 29 South, Range 18 East, Hillsborough County, FL.

Your project, as depicted on the enclosed drawings, is authorized by Nationwide Permit (NWP) Number 3, 13, and 27. In addition, project specific conditions have been enclosed. This verification is valid until **March 18, 2022**. Furthermore, if you commence or are under contract to commence this activity before the date that the relevant nationwide permit is modified or revoked, you will have 12 months from the date of the modification or revocation of the NWP to complete the activity under the present terms and conditions of

this nationwide permit. Please access the U.S. Army Corps of Engineers' (Corps) Jacksonville District's Regulatory Internet page to access Internet links to view the Final Nationwide Permits, Federal Register Vol. 82, dated January 6, 2017, specifically pages 1983 to 2008, and the table of Regional Conditions. The Internet page address is:

http://www.saj.usace.army.mil/Missions/Regulatory.aspx

Please be aware this Internet address is case sensitive and should be entered as it appears above. Once there you will need to click on "Source Book"; and, then click on "Nationwide Permits." These files contain the description of the Nationwide Permit authorization, the Nationwide Permit general conditions, and the regional conditions, which apply specifically to this verification for NWP 3, 13, and 27. Enclosed is a list of General Conditions, which apply to all Department of the Army authorizations. You must comply with all of the special and general conditions and any project specific condition of this authorization or you may be subject to enforcement action. In the event you have not completed construction of your project within the specified time limit, a separate application or re-verification may be required.

The following special conditions are included with this verification:

1. **Reporting Address:** The Permittee shall submit all reports, documentation, and correspondence required by conditions of this permit to the following address: SAJ-RD-Enforcement@usace.army.mil. The Permittee shall reference this permit number, SAJ-2018-03656, on all submittals.

2. **Commencement Notification:** Within 10 days from the date of initiating the work authorized by this permit, the Permittee shall provide a written notification of the date of commencement of authorized work to the Corps.

3. **Self-Certification:** Within 60 days of completion of the work authorized by this permit, the Permittee shall complete the enclosed "Self-Certification Statement of Compliance" form and submit it to the Corps. In the event that the completed work deviates in any manner from the authorized work, the Permittee shall describe the deviations between the work authorized by this permit and the work as constructed on the "Self-Certification Statement of Compliance" form. The description of any deviations on the "Self-Certification Statement of Compliance" form does not constitute approval of any deviations by the Corps.

4. **Erosion Control:** Prior to the initiation of any work authorized by this permit, the Permittee shall install erosion control measures along the perimeter of all work areas to prevent the displacement of fill material outside the work area into waters of the United States. Immediately after completion of the final grading of the land surface, all slopes, land surfaces, and filled areas shall be stabilized using sod, degradable mats, barriers, or a combination of similar stabilizing materials to prevent erosion. The erosion control measures shall remain in place and be maintained until all authorized work is completed and the work areas are stabilized.

5. **Fill Material:** The Permittee shall use only clean fill material for this project. The fill material shall be free from items such as trash, debris, automotive parts, asphalt, construction materials, concrete block with exposed reinforcement bars, and soils contaminated with any toxic substance, in toxic amounts in accordance with Section 307 of the Clean Water Act.

6. **Regulatory Agency Changes:** Should any other agency require and/or approve changes to the work authorized or obligated by this permit, the Permittee is advised that a modification to this permit instrument is required prior to initiation of those changes. It is the Permittee's responsibility to request a modification of this permit from the Tampa Permits Section.

7. **Posting of Permit:** The Permittee shall have available and maintain for review a copy of this permit and approved plans at the construction site.

8. **Turbidity Barriers:** Prior to the initiation of any of the work authorized by this permit, the Permittee shall install floating turbidity barriers with weighted skirts that extend to within define distance desired or use 1 foot or eliminate distance from bottom of the bottom around all work areas that are in, or adjacent to, surface waters. The turbidity barriers shall remain in place and be maintained until the authorized work has been completed and all suspended and erodible materials have been stabilized. Turbidity barriers shall be removed upon stabilization of the work area.

9. **Dredged Material Disposal:** The Permittee shall place all dredged material in a self-contained, upland disposal site as detailed on drawing plans Exhibit 6. The Permittee shall maintain the upland disposal site to prevent the discharge of dredged material and associated effluent into waters of the United States.

10. **Assurance of Navigation:** The authorization letter will contain a special condition stating that if future operations by the United States require the removal, relocation, or other alteration, of the structures or work herein authorized, or if, in the opinion of the Secretary of the Army or his authorized representative, said structure or work shall cause unreasonable obstruction to the free navigation of the navigable waters, the applicant would be required, upon due notice from the Corps of Engineers, to remove, relocate, or alter the structural work or obstructions caused thereby, without expense to the United States. No claim shall be made against the United States on account of any such removal or alteration.

11. **Cultural Resources/Historic Properties:**

    a. No structure or work shall adversely affect impact or disturb properties listed in the *National Register of Historic Places* (NRHP) or those eligible for inclusion in the NRHP.

    b. If during the ground disturbing activities and construction work within the permit area, there are archaeological/cultural materials encountered which were not the subject of a previous cultural resources assessment survey (and which shall include, but not be limited to: pottery, modified shell, flora, fauna, human remains, ceramics, stone tools or metal implements, dugout canoes, evidence of structures or any other physical remains that could be associated with Native American cultures or early colonial or American settlement), the Permittee shall immediately stop all work and ground-disturbing activities within a 100-meter diameter of the discovery and notify the Corps within the same business day (8 hours). The Corps shall then notify the Florida State Historic Preservation Officer (SHPO) and the appropriate Tribal Historic Preservation Officer(s) (THPO(s)) to assess the significance of the discovery and devise appropriate actions.

    c. Additional cultural resources assessments may be required of the permit area in the case of unanticipated discoveries as referenced in accordance with the above Special Condition ; and if deemed necessary by the SHPO, THPO(s), or Corps, in accordance with 36 CFR 800 or 33 CFR 325, Appendix C (5). Based, on the circumstances of the discovery, equity to all parties, and considerations of the public interest, the Corps may modify, suspend or revoke the permit in accordance with 33 CFR Part 325.7. Such activity shall not resume on non-federal lands without written authorization from the SHPO for finds under his or her jurisdiction, and from the Corps.

d. In the unlikely event that unmarked human remains are identified on non-federal lands, they will be treated in accordance with Section 872.05 Florida Statutes. All work and ground disturbing activities within a 100-meter diameter of the unmarked human remains shall immediately cease and the Permittee shall immediately notify the medical examiner, Corps, and State Archeologist within the same business day (8-hours). The Corps shall then notify the appropriate SHPO and THPO(s). Based, on the circumstances of the discovery, equity to all parties, and considerations of the public interest, the Corps may modify, suspend or revoke the permit in accordance with 33 CFR Part 325.7. Such activity shall not resume without written authorization from the State Archeologist and from the Corps.

This letter of authorization does not obviate the necessity to obtain any other Federal, State, or local permits, which may be required. Prior to the initiation of any construction, projects qualifying for this Nationwide permit must qualify for an exemption under section 403.813(1), Florida Statutes or 373.406, Florida Statutes, or otherwise be authorized by the applicable permit required under Part IV of Chapter 373, Florida Statutes, by the Department of Environmental Protection, a water management district under section 373.069, Florida Statutes, or a local government with delegated authority under section 373.441, Florida Statutes, and receive Water Quality Certification and applicable Coastal Zone Consistency Concurrence or waiver thereto, as well as any authorizations required for the use of state-owned submerged lands under Chapter 253, Florida Statutes, and, as applicable, Chapter 258, Florida Statutes. You should check State-permitting requirements with the Florida Department of Environmental Protection or the appropriate water management district.

This letter of authorization does not give absolute Federal authority to perform the work as specified on your application. The proposed work may be subject to local building restrictions mandated by the National Flood Insurance Program. You should contact your local office that issues building permits to determine if your site is located in a flood-prone area, and if you must comply with the local building requirements mandated by the National Flood Insurance Program.

If you are unable to access the internet or require a hardcopy of any of the conditions, limitations, or expiration date for the above referenced NWP, please contact me by telephone at 813-769-7071.

Thank you for your cooperation with our permit program. The Corps Jacksonville District Regulatory Division is committed to improving service to our customers. We strive to perform our duty in a friendly and timely manner while working to preserve our environment. We invite you to complete our automated Customer Service Survey at: http://corpsmapu.usace.army.mil/cm_apex/f?p=regulatory_survey. Please be aware this Internet address is case sensitive; and, you will need to enter it exactly as it appears above. Your input is appreciated – favorable or otherwise.

Sincerely,

LEANNE OBRA
Project Manager

Enclosures:
1. General Conditions of 33CFR Part 320-330 (1 page)
2. Self-Certification Statement of Compliance (1 page)
3. Permit Transfer Request (1 page)
4. Project Plans (24 pages)

Copies Furnished:
1. Bryan Flynn, blynn@esassoc.com
2. CESAJ-RD-PE- U.S. Army Corps, Regulatory Division, Enforcement Section

GENERAL CONDITIONS
33 CFR PART 320-330

1. The time limit for completing the work authorized ends on **March 18, 2022**.

2. You must maintain the activity authorized by this permit in good condition and in conformance with the terms and conditions of this permit. You are not relieved of this requirement if you abandon the permitted activity, although you may make a good faith transfer to a third party in compliance with General Condition 4 below. Should you wish to cease to maintain the authorized activity or should you desire to abandon it without a good faith transfer, you must obtain a modification of this permit from this office, which may require restoration of the area.

3. If you discover any previously unknown historic or archeological remains while accomplishing the activity authorized by this permit, you must immediately notify this office of what you have found. We will initiate the Federal and state coordination required to determine if the remains warrant a recovery effort of if the site is eligible for listing in the National Register of Historic Places.

4. If you sell the property associated with this permit you must obtain the signature of the new owner in the space provided and forward a copy of the permit to this office to validate the transfer of this authorization.

5. If a conditioned water quality certification has been issued for your project, you must comply with the conditions specified in the certification as special conditions to this permit. For your convenience, a copy of the certification is attached if it contains such conditions.

6. You must allow a representative from this office to inspect the authorized activity at any time deemed necessary to ensure that it is being or has been accomplished in accordance with the terms and conditions of your permit.

SELF-CERTIFICATION STATEMENT OF COMPLIANCE

Permit Number: SAJ-2018-03656

Permittee's Name & Address (please print or type):_____

_____

Telephone Number:_____

Location of the Work:_____

Date Work Started:_____ Date Work Completed:_____

PROPERTY IS INACCESSIBLE WITHOUT PRIOR NOTIFICATION: YES _____ NO_____

TO SCHEDULE AN INSPECTION PLEASE CONTACT _____ AT _____

Description of the Work (e.g. bank stabilization, residential or commercial filling, docks, dredging,
etc.):_____

_____

_____

Acreage or Square Feet of Impacts to Waters of the United States: _____

Describe Mitigation completed (if applicable): _____

_____

Describe any Deviations from Permit (attach drawing(s) depicting the deviations):

_____

_____

****

I certify that all work, and mitigation (if applicable) was done in accordance with the limitations and conditions as described in the permit. Any deviations as described above are depicted on the attached drawing(s).

_____
Signature of Permittee

_____
Date

DEPARTMENT OF THE ARMY PERMIT TRANSFER REQUEST

PERMIT NUMBER: SAJ-2018-03656 (NW-LEO)

When the structures or work authorized by this permit are still in existence at the time the property is transferred, the terms and conditions of this permit will continue to be binding on the new owner(s) of the property. Although the construction period for works authorized by Department of the Army permits is finite, the permit itself, with its limitations, does not expire.

To validate the transfer of this permit and the associated responsibilities associated with compliance with its terms and conditions, have the transferee sign and date below and mail to the U.S. Army Corps of Engineers, Enforcement Section, Post Office Box 4970, Jacksonville, FL 32232-0019.

_____
(TRANSFEREE-SIGNATURE)

_____
(DATE)

_____
(NAME-PRINTED)

_____

_____
(MAILING ADDRESS)

_____
(CITY, STATE, ZIP CODE)

_____
(SUBDIVISION)

_____ _____
(LOT) **(BLOCK)**

_____
(STREET ADDRESS)

FLORIDA DEPARTMENT OF Environmental Protection

Southwest District Office
13051 North Telecom Parkway #101
Temple Terrace, Florida 33637-0926

Ron DeSantis
Governor

Jeanette Nuñez
Lt. Governor

Noah Valenstein
Secretary

September 19,2019

City of Tampa
c/o Paul Dial, Tampa Parks and Recreation Director
3402 West Columbus Drive
Tampa, Florida 33607
Paul.Dial@Tampagov.net

Dear Mr. Dial:

Enclosed is the Environmental Resource Permit, DEP Project No. 29-0376272-001-EI, issued pursuant to Part IV of Chapter 373, Florida Statutes, and Title 62, Florida Administrative Code.

Appeal rights for you and for any affected third party are described in the text of the permit along with conditions that must be met when authorized activities are undertaken.

You, as the applicant, are responsible for all aspects of permit compliance. You should therefore review this permit document carefully to ensure compliance with the general conditions and specific conditions contained herein.

Please be aware of permit General Condition number 4, which states, "At least 48 hours prior to beginning the authorized activities, the permittee shall submit to the Agency a fully executed Form 62-330.350(1), "Construction Commencement Notice"."

If you have any questions about this document, please contact me at Katya.Brioni@FloridaDEP.gov or (813) 470-5775.

Thank you for your participation in the permit process and in managing the natural resources of the State of Florida.

Sincerely,

Katya Brioni
Environmental Specialist
Permitting and Waste Cleanup Program

cc: U.S. Army Corps of Engineers, tampareg@usace.army.mil
Kat Brioni, DEP Southwest District, Katya.Brioni@FloridaDEP.gov
DEP Southwest District, sw_erp@dep.state.fl.us
Jackie Julien, Port Tampa Bay, jjulien@tampaport.com
Thomas F. Ries, President Ecosphere Restoration Institute, Tries@ecospherestoration.org
Bryan Flynn, Environmental Science Associates, bflynn@esassoc.com

FLORIDA DEPARTMENT OF
Environmental Protection

Southwest District Office
13051 North Telecom Parkway #101
Temple Terrace, Florida 33637-0926

Ron DeSantis
Governor

Jeanette Nuñez
Lt. Governor

Noah Valenstein
Secretary

Enclosure: Environmental Resource Permit with Attachments (10 pages)

Permittee/Authorized Entity:
City of Tampa
c/o Paul Dial, Tampa Parks and Recreation Director
3402 West Columbus Drive
Tampa, Florida 33607

Haya Park Living Shoreline

Authorized Agent:
Ecosphere Restoration Institute
c/o Thomas F. Ries
323 12th Avenue
Indian Rocks Beach, Florida 33785

Individual Environmental Resource Permit

State-owned Submerged Lands Authorization – Not Applicable

U.S. Army Corps of Engineers Authorization – Not Approved

Permit No.: 29-0376272-001-EI

Permit Issuance Date: 9/19/2019
Permit Construction Phase Expiration Date: 9/19/2024

Environmental Resource Permit

Permittee: City of Tampa
Permit No: 29-0376272-001-EI

PROJECT LOCATION

The activities authorized by this permit are located at 5108 North River Boulevard, Tampa, Florida 33603, in Section 01, Township 29 South, Range 18 East, in Hillsborough County, at lat 27.99290687 x long -82.46512983. Activities will occur along the shoreline of Ignacio Haya Park, within the stormwater conveyance system, and portions of the uplands for mitigation and restoration.

PROJECT DESCRIPTION

The permittee is authorized to fill and recontour the eroding areas of the subject shoreline with approximately 1,350 cubic yards of clean fill, as needed, along Hillsborough River, a Class III Florida waterbody, and reestablish the shoreline with native vegetation after removal of all exotic and nuisance species. The installation of 1,000 linear feet of breakwater to protect the shoreline planting area is also authorized. The breakwater will have five-foot gaps every 75 feet to prevent entrapment of wildlife. Riprap replacement will also take place 120-feet southeast of the Hillsborough Avenue bridge. To prevent erosion, rip rap aprons will be installed around the discharge point of existing 18-inch HDPE pipes in two separate locations along the shoreline. In addition, 300 cubic-yards of material will be dredged from an existing ditch area to remove pollutants and establish an improved stormwater conveyance feature. Enhancement of the existing ditch area will include the creation of 0.09 acres of wetlands from existing uplands. Authorized activities are depicted on the attached exhibits.

To offset unavoidable impacts that will occur from placing fill within wetlands (FLUCCs 510) along the shoreline, the permittee shall provide mitigation by removing all exotic and nuisance species from a 0.263-acre area of shoreline on-site, and replant with native wetland vegetation, including *Spartina alterniflora, Spartina patens, Spartina bakeri, Muhlenbergia capillaris, and Helianthus debilis*. In addition, the existing ditch feature will be expanded and enhanced to include vegetated side slopes, and an increased capacity to filter runoff received from River Boulevard before discharging into the Hillsborough River.

AUTHORIZATIONS

Environmental Resource Permit
The Department has determined that the activity qualifies for an Environmental Resource Permit. Therefore, the Environmental Resource Permit is hereby granted, pursuant to Part IV of Chapter 373, Florida Statutes (F.S.), and Chapter 62-330, Florida Administrative Code (F.A.C.).

Sovereignty Submerged Lands Authorization
As staff to the Board of Trustees of the Internal Improvement Trust Fund (Board of Trustees), the Department has determined the activity is not on submerged lands owned by the State of Florida. Therefore, your project is not subject to the requirements of Chapter 253, F.S., or Rule 18-21, F.A.C.

Federal Authorization

Your proposed activity as outlined on your application and attached drawings **does not qualify** for Federal authorization pursuant to the State Programmatic General Permit and a **SEPARATE permit** or authorization **shall be required** from the Corps. You must apply separately to the Corps using their APPLICATION FOR DEPARTMENT OF THE ARMY PERMIT, ENG FORM 4345, or alternative as allowed by their

regulations. More information on Corps permitting may be found online in the Jacksonville District Regulatory Division Source Book at: https://www.saj.usace.army.mil/Missions/Regulatory/Source-Book.

Authority for review - an agreement with the USACOE entitled "Coordination Agreement Between the U. S. Army Corps of Engineers (Jacksonville District) and the Florida Department of Environmental Protection (or Duly Authorized Designee), State Programmatic General Permit", Section 10 of the Rivers and Harbor Act of 1899, and Section 404 of the Clean Water Act.

Coastal Zone Management
Issuance of this authorization also constitutes a finding of consistency with Florida's Coastal Zone Management Program, as required by Section 307 of the Coastal Zone Management Act.

Water Quality Certification
This permit also constitutes a water quality certification under Section 401 of the Clean Water Act, 33 U.S.C. 1341

Other Authorizations
You are advised that authorizations or permits for this activity may be required by other federal, state, regional, or local entities including but not limited to local governments or municipalities. This permit does not relieve you from the requirements to obtain all other required permits or authorizations.

The activity described may be conducted only in accordance with the terms, conditions and attachments contained in this document. Issuance and granting of the permit and authorizations herein do not infer, nor guarantee, nor imply that future permits, authorizations, or modifications will be granted by the Department.

PERMIT CONDITIONS

The activities described must be conducted in accordance with:

- **The Specific Conditions**
- **The General Conditions**
- **The limits, conditions and locations of work shown in the attached drawings**
- **The term limits of this authorization**

You are advised to read and understand these conditions and drawings prior to beginning the authorized activities, and to ensure the work is conducted in conformance with all the terms, conditions, and drawings herein. If you are using a contractor, the contractor also should read and understand these conditions and drawings prior to beginning any activity. Failure to comply with these conditions, including any mitigation requirements, shall be grounds for the Department to revoke the permit and authorization and to take appropriate enforcement action. Operation of the facility is not authorized except when determined to be in conformance with all applicable rules and this permit, as described.

SPECIFIC CONDITIONS – CONSTRUCTION ACTIVITIES

1. Submittals required herein (e.g., progress reports, as-built drawings, etc.) shall include the permittee's name and permit number 29-0376272-001 and shall be directed by e-mail to SW_erp@FloridaDEP.gov with a subject line of "Compliance: permit number 29-0376272-001", or by mail to:

    Department of Environmental Protection
    Southwest District
    ATTN: ERP Compliance Assurance
    13051 North Telecom Parkway

Temple Terrace, FL 33637-0926

2. Wetland areas or waterbodies that are outside the specific limits of construction authorized by this permit, must be protected from erosion, sedimentation, siltation, scouring, excess turbidity, and/or dewatering. There shall be no discharge in violation of the water quality standards in Chapter 62-302, F.A.C. Turbidity/erosion controls shall be installed prior to clearing, excavation or placement of fill material, shall be maintained until construction is completed, disturbed areas are stabilized, and turbidity levels have fallen to less than 29 NTU's above background. The turbidity and erosion control devices shall be removed within 14 days once these conditions are met.

3. The structure/work authorized by this permit shall not be placed/conducted on any property, other than that owned by the permittee, without the prior written approval of that property owner.

4. In the event the permittee files for bankruptcy prior to completion of work permitted and required by this permit, the permittee must notify the Department within 30 days of filing. The notification shall identify the bankruptcy court and case number and shall include a copy of the bankruptcy petition.

5. Areas of exposed soils shall be isolated from wetlands or other surface waters to prevent erosion and deposition of these soils into wetlands or other surface waters during construction and operation of permitted activities.

6. Grass seed, or sod shall be installed and maintained on exposed slopes and disturbed soil areas within 48 hours of completing final grade, and at other times as necessary, to prevent erosion, sedimentation or turbid discharges into waters of the state and/or adjacent wetlands. A vegetative cover that stabilizes and prevents erosion of the fill material shall be established within 60 days of sodding or seeding. Turbidity barriers/erosion control devices shall be removed upon establishment of a substantial vegetative cover.

7. The permittee shall be responsible for ensuring erosion control devices/procedures are inspected and maintained daily during all phases of construction authorized by this permit until areas disturbed during construction are sufficiently stabilized to prevent erosion, siltation, and turbid discharges.

8. Staked filter cloth shall be positioned at the edge of the permitted fill slopes adjacent to wetlands to prevent turbid run-off and erosion.

9. A floating turbidity apron/curtain shall be installed around the waterward boundary of the construction area prior to construction and shall remain in place until construction is complete and turbidity levels within the work area have returned to background levels.

10. Dredging shall be limited to day light; no dredging or dewatering activities are authorized to be conducted at night.

11. The dredged material shall be dewatered in a self-contained, upland disposal area on site, which will prevent the escape of dredged material and associated effluent into wetlands and surface waters, as shown on Sheet C-18 of the attached permit drawings.

12. Areas to be dredged shall be in accordance with the attached permit drawings and shall not exceed the areas and depths indicated on those drawings. The dredged material shall be temporarily placed in a self-contained, upland area as depicted on Sheet C-18 of the attached permit drawings. The temporary dewatering/storage area shall be constructed in a manner which shall prevent the escape of dredged material and associated effluent into wetlands and surface waters. Discharge of water or dredged material to waters of the State shall not be allowed during transport.

13. All dredged materials shall be disposed of at an off-site solid waste disposal facility within 15 days of the completion of dredge/ dewatering activities. To provide evidence of compliance with this condition, the permittee shall submit weight tickets to the Department within 30 days of material disposal. The authorized spoil dewatering/ disposal area shall be restored to pre-construction conditions within 15 days of the completion of dredge/ dewatering activities.

14. The revetment shall be constructed in accordance with the distances from fixed landmarks as shown on Sheet C-14 and C-15 the attached permit drawings.

15. "Riprap" shall consist of unconsolidated boulders, rocks, or clean concrete rubble with no exposed reinforcing rods or similar protrusions. The riprap shall be free of sediment, debris and toxins or otherwise deleterious substances, and shall have average dimensions of one to three feet in diameter.

16. The riprap revetment shall be fully constructed as shown on Sheet C-14 and C-15 of the attached permit drawings prior to the placement of backfill material. Fill material used behind the riprap revetment shall be clean fill and free of vegetative matter, trash, garbage, toxic or hazardous waste or other unsuitable materials.

17. The permittee shall report any damage to wetlands/littoral zone area as a result of the riprap construction to the Department within 24 hours.

18. The revetment shall be installed so that it is tied into and does not extend waterward of the existing revetment north of the project site.

19. This permit does not authorize the installation of water, sewer, cable or utility lines within wetlands or waterbodies.

20. Unauthorized impacts to shoreline as a result of the authorized construction shall be reported to the Department within 24 hours.

21. Storage or stockpiling of tools and materials (i.e., lumber, pilings, debris) within wetlands or other surface waters is prohibited.

SPECIFIC CONDITIONS – MITIGATION/ENHANCEMENT

22. To mitigate for the fill impacts along the shoreline, the permittee shall implement the mitigation plan as described in Attachment C-14, C-15, C-16 of the permit. The plan shall consist of:

    a. the creation of 0.09 acres of wetlands and the enhancement of 0.263 acres of jurisdictional wetlands and shoreline.

SPECIFIC MANATEE CONDITIONS

23. All personnel associated with the project shall be instructed about the presence of manatees and manatee speed zones, and the need to avoid collisions with, and injury to manatees. The permittee shall advise all construction personnel that there are civil and criminal penalties for harming, harassing, or killing manatees which are protected under the Marine Mammal Protection Act, the Endangered Species Act, and the Florida Manatee Sanctuary Act.

24. All vessels associated with the construction project shall operate at "Idle Speed/No Wake" at all times while in the immediate area and while in water where the draft of the vessel provides less than a four-foot clearance from the bottom. All vessels shall follow routes of deep water whenever possible.

25. Siltation or turbidity barriers shall be made of material in which manatees cannot become entangled, shall be properly secured, and shall be regularly monitored to avoid manatee entanglement or entrapment. Barriers shall not impede manatee movement.

26. All on-site project personnel are responsible for observing water-related activities for the presence of manatees. All in-water operations, including vessels, shall be shutdown if a manatee comes within 50 feet of the operation. Activities shall not resume until every manatee has moved beyond the 50-foot radius of the project operation, or until 30 minutes has elapsed wherein a manatee has not reappeared within 50 feet of the operation. Animals shall not be herded away or harassed into leaving.

27. Any collision with or injury to a manatee shall be reported immediately to the FWC Hotline at 1-888-404-FWCC. Collision and/or injury should also be reported to the U.S. Fish and Wildlife Service in Jacksonville (1-904-731-3336) for north Florida or Vero Beach (1-772-562-3909) for south Florida.

28. Temporary signs concerning manatees shall be posted prior to and during all in-water project activities. All signs are to be removed by the permittee upon completion of the project. Awareness signs that have already been approved for this use by the Florida Fish and Wildlife Conservation Commission (FWC) must be used. One sign measuring at least 3 ft. by 4 ft. which reads *Caution: Manatee Area* must be posted. A second sign measuring at least 8 1/2" by 11" explaining the requirements for "Idle Speed/No Wake" and the shutdown of in-water operations must be posted in a location prominently visible to all personnel engaged in water-related activities. Please see the Florida Fish and Wildlife Conservation Commission website for information on how to obtain appropriate signs: http://www.myfwc.com/docs/WildlifeHabitats/Manatee_EducationalSign.pdf

SPECIFIC CONDITIONS- CONSTRUCTION COMPLETION

(The permittee shall comply with the following conditions prior to the transfer to operation phase. All documentation required below shall be included with the permittee's request to transfer the project to the operation phase [Form No. 62-330.310(2),F.A.C.].)

29. The permittee shall submit one set of signed, dated and sealed as-built drawings to the Department via the Department's electronic submittal portal at ftp://ftp.dep.state.fl.us/pub/incoming/ (two copies if submitting paper sets) for review and approval within 30 days of completion of construction. The as-built drawings shall be based on the Department permitted construction drawings and any pertinent specific conditions, which should be revised to reflect changes made during construction. Both the original design and constructed elevations must be clearly shown. The plans must be clearly labeled as "as-built" or "record" drawings. Surveyed dimensions and elevations required shall be verified and signed, dated and sealed by a Florida registered professional. As-builts shall be submitted to the Department regardless of whether or not deviations are present.

    The following information shall be verified on the as-built drawings from the engineering drawings signed and sealed by Byran Flynn, #70856, on May 13, 2019, drawings signed/sealed:

Plan View/ Cross Section Name	Drawing Number

Plan-View Drawing (Ditch)	C-18
Cross-Section Drawings (Ditch)	C-24

SPECIFIC CONDITIONS – MONITORING/REPORTING REQUIREMENTS

30. A "Time Zero" Monitoring Report shall be submitted within 30 days of completion of planting of the shoreline and ditch enhancement area(s) and shall include the following:

    a. Date the planting was completed;

    b. Color photographs to provide an accurate representation of the shoreline enhancement area. The photographs shall be taken from fixed reference points and directions which are shown on a scaled plan view; and

    c. A table depicting numbers, spacing, and sizes (including tree height) of each species planted.

31. Monitoring reports shall be submitted for a minimum of three (3) years. Monitoring reports shall be submitted semi-annually for the first year following construction completion, and annually for years two (2) and three (3).

    The Monitoring reports shall include the following for each mitigation/enhancement area:

    a. Color photographic prints taken from the reference points established in the Time Zero Monitoring Report.

    b. Detailed description of statistical methods used which must include the following:
        i. Subsample method and map of sampling locations
        ii. Method used to determine percent cover and growth
        iii. Statistical analyses used to determine valid subsample size and to analyze results of sampling

    c. Total percent cover by planted herbaceous species.

    d. Plant species composition with estimates of the contribution of each species to percent cover.

32. The mitigation shall be deemed successful when the below criteria have been continuously met for a period of at least one (1) year, following the initial three-year monitoring period:

    a. Planted herbaceous species and naturally recruited wetland species have achieved a minimum 80% cover.

    b. Total contribution to percent cover by non-native wetland species and species not listed in 62-340.450, F.A.C. shall be maintained below 20 %.

    c. The Department's State Lands and Environmental Resource Program staff has inspected the mitigation area and determined that the mitigation area(s) meet the above success criteria.

33. The responsibility to assess if the mitigation is meeting the permit-specified success criteria shall not fall solely on the Department. In the event the permittee becomes aware mitigation is not meeting the success criteria (based on either site observations or review of monitoring reports), the permittee,

no later than six months before the permit construction phase expiration date, shall submit an alternative mitigation plan to the Department for review and approval.

34. The permittee shall implement the alternative restoration plan no later than 60 days after receiving Department approval.

35. Failure of the Department to notify the permittee of mitigation failure does not prevent the Department from requiring the permittee to meet mitigation success criteria as defined in specific condition No. 51.

GENERAL CONDITIONS FOR INDIVIDUAL PERMITS

The following general conditions are binding on all individual permits issued under chapter 62-330, F.A.C., except where the conditions are not applicable to the authorized activity, or where the conditions must be modified to accommodate project-specific conditions.

1. All activities shall be implemented following the plans, specifications and performance criteria approved by this permit. Any deviations must be authorized in a permit modification in accordance with Rule 62-330.315, F.A.C. Any deviations that are not so authorized may subject the permittee to enforcement action and revocation of the permit under Chapter 373, F.S.

2. A complete copy of this permit shall be kept at the work site of the permitted activity during the construction phase, and shall be available for review at the work site upon request by the Agency staff. The permittee shall require the contractor to review the complete permit prior to beginning construction.

3. Activities shall be conducted in a manner that does not cause or contribute to violations of state water quality standards. Performance-based erosion and sediment control best management practices shall be installed immediately prior to, and be maintained during and after construction as needed, to prevent adverse impacts to the water resources and adjacent lands. Such practices shall be in accordance with the *State of Florida Erosion and Sediment Control Designer and Reviewer Manual (Florida Department of Environmental Protection and Florida Department of Transportation June 2007)*, and the *Florida Stormwater Erosion and Sedimentation Control Inspector's Manual (Florida Department of Environmental Protection, Nonpoint Source Management Section, Tallahassee, Florida, July 2008)*, which are both incorporated by reference in subparagraph 62-330.050(9)(b)5., F.A.C., unless a project-specific erosion and sediment control plan is approved or other water quality control measures are required as part of the permit.

4. At least 48 hours prior to beginning the authorized activities, the permittee shall submit to the Agency a fully executed Form 62-330.350(1), "Construction Commencement Notice," [October 1, 2013], which is incorporated by reference in paragraph 62-330.350(1)(d), F.A.C., indicating the expected start and completion dates. A copy of this form may be obtained from the Agency, as described in subsection 62-330.010(5), F.A.C. If available, an Agency website that fulfills this notification requirement may be used in lieu of the form.

5. Unless the permit is transferred under Rule 62-330.340, F.A.C., or transferred to an operating entity under Rule 62-330.310, F.A.C., the permittee is liable to comply with the plans, terms and conditions of the permit for the life of the project or activity.

6. Within 30 days after completing construction of the entire project, or any independent portion of the project, the permittee shall provide the following to the Agency, as applicable:

a. For an individual, private single-family residential dwelling unit, duplex, triplex, or quadruplex – "Construction Completion and Inspection Certification for Activities Associated With a Private Single-Family Dwelling Unit" [Form 62-330.310(3)]; or

b. For all other activities – "As-Built Certification and Request for Conversion to Operational Phase" [Form 62-330.310(1)].

c. If available, an Agency website that fulfills this certification requirement may be used in lieu of the form.

7. If the final operation and maintenance entity is a third party:

a. Prior to sales of any lot or unit served by the activity and within one year of permit issuance, or within 30 days of as- built certification, whichever comes first, the permittee shall submit, as applicable, a copy of the operation and maintenance documents (see sections 12.3 thru 12.3.3 of Volume I) as filed with the Department of State, Division of Corporations and a copy of any easement, plat, or deed restriction needed to operate or maintain the project, as recorded with the Clerk of the Court in the County in which the activity is located.

b. Within 30 days of submittal of the as- built certification, the permittee shall submit "Request for Transfer of Environmental Resource Permit to the Perpetual Operation Entity" [Form 62-330.310(2)] to transfer the permit to the operation and maintenance entity, along with the documentation requested in the form. If available, an Agency website that fulfills this transfer requirement may be used in lieu of the form.

8. The permittee shall notify the Agency in writing of changes required by any other regulatory agency that require changes to the permitted activity, and any required modification of this permit must be obtained prior to implementing the changes.

9. This permit does not:

a. Convey to the permittee any property rights or privileges, or any other rights or privileges other than those specified herein or in Chapter 62-330, F.A.C.;

b. Convey to the permittee or create in the permittee any interest in real property;

c. Relieve the permittee from the need to obtain and comply with any other required federal, state, and local authorization, law, rule, or ordinance; or

d. Authorize any entrance upon or work on property that is not owned, held in easement, or controlled by the permittee.

10. Prior to conducting any activities on state-owned submerged lands or other lands of the state, title to which is vested in the Board of Trustees of the Internal Improvement Trust Fund, the permittee must receive all necessary approvals and authorizations under Chapters 253 and 258, F.S. Written authorization that requires formal execution by the Board of Trustees of the Internal Improvement Trust Fund shall not be considered received until it has been fully executed.

11. The permittee shall hold and save the Agency harmless from any and all damages, claims, or liabilities that may arise by reason of the construction, alteration, operation, maintenance, removal, abandonment or use of any project authorized by the permit.

12. The permittee shall notify the Agency in writing:
    a. Immediately if any previously submitted information is discovered to be inaccurate; and

    b. Within 30 days of any conveyance or division of ownership or control of the property or the system, other than conveyance via a long-term lease, and the new owner shall request transfer of the permit in accordance with Rule 62-330.340, F.A.C. This does not apply to the sale of lots or units in residential or commercial subdivisions or condominiums where the stormwater management system has been completed and converted to the operation phase.

13. Upon reasonable notice to the permittee, Agency staff with proper identification shall have permission to enter, inspect, sample and test the project or activities to ensure conformity with the plans and specifications authorized in the permit.

14. If any prehistoric or historic artifacts, such as pottery or ceramics, stone tools or metal implements, dugout canoes, or any other physical remains that could be associated with Native American cultures, or early colonial or American settlement are encountered at any time within the project site area, work involving subsurface disturbance in the immediate vicinity of such discoveries shall cease. The permittee or other designee shall contact the Florida Department of State, Division of Historical Resources, Compliance and Review Section, at (850) 245-6333 or (800) 847-7278, as well as the appropriate permitting agency office. Such subsurface work shall not resume without verbal or written authorization from the Division of Historical Resources. If unmarked human remains are encountered, all work shall stop immediately and notification shall be provided in accordance with Section 872.05, F.S.

15. Any delineation of the extent of a wetland or other surface water submitted as part of the permit application, including plans or other supporting documentation, shall not be considered binding unless a specific condition of this permit or a formal determination under Rule 62-330.201, F.A.C., provides otherwise.

16. The permittee shall provide routine maintenance of all components of the stormwater management system to remove trapped sediments and debris. Removed materials shall be disposed of in a landfill or other uplands in a manner that does not require a permit under Chapter 62-330, F.A.C., or cause violations of state water quality standards.

17. This permit is issued based on the applicant's submitted information that reasonably demonstrates that adverse water resource-related impacts will not be caused by the completed permit activity. If any adverse impacts result, the Agency will require the permittee to eliminate the cause, obtain any necessary permit modification, and take any necessary corrective actions to resolve the adverse impacts.

18. A Recorded Notice of Environmental Resource Permit may be recorded in the county public records in accordance with subsection 62-330.090(7), F.A.C. Such notice is not an encumbrance upon the property.

NOTICE OF RIGHTS

Judicial Review

Once this decision becomes final, any party to this action has the right to seek judicial review pursuant to Section 120.68, F.S., by filing a Notice of Appeal pursuant to Rules 9.110 and 9.190, Florida Rules of Appellate Procedure, with the Clerk of the Department in the Office of General Counsel, 3900 Commonwealth

Boulevard, M.S. 35, Tallahassee, Florida 32399-3000; and by filing a copy of the Notice of Appeal accompanied by the applicable filing fees with the appropriate District Court of Appeal. The Notice of Appeal must be filed within 30 days from the date this action is filed with the Clerk of the Department.

Executed in Hillsborough County, Florida.

STATE OF FLORIDA DEPARTMENT
OF ENVIRONMENTAL PROTECTION

_____

Pamala Vazquez
Program Administrator
Permitting and Waste Cleanup Program
Southwest District

Attachments:
Exhibit 1, Project Drawings and Design Specs., (24 pages)
As-built Certification and Request for Conversion to Operational Phase/ Form 62-330.310(2)(1 page)
Request for Transfer to the Perpetual Operation Entity/Form 62-330.310(1)(2 pages)
Request to Transfer Permit/Form 62-330.340(1 page)
Construction Commencement Notice/Form 62-330.350(1 page)

Copies furnished to:
U.S. Army Corps of Engineers, tampareg@usace.army.mil
Kat Brioni, DEP Southwest District, Katya.Brioni@FloridaDEP.gov
DEP Southwest District, SW_ERP@FloridaDEP.gov
DEP Southwest District, sw_clerical@FloridaDEP.gov
Jackie Julien, Port Tampa Bay, jjulien@tampaport.com
Thomas F. Ries, President Ecosphere Restoration Institute, Tries@ecospherestoration.org
Bryan Flynn, Environmental Science Associates, bflynn@esassoc.com

CERTIFICATE OF SERVICE

The undersigned hereby certifies that this permit, including all copies, were mailed before the close of business on _____, to the above listed persons.

FILING AND ACKNOWLEDGMENT

FILED, on this date, under 120.52(7) of the
Florida Statutes, with the designated Department Clerk,
receipt of which is hereby acknowledged.

Shonathuray Burie
_____ September 19, 2019
Clerk Date

Request for Transfer of Environmental Resource Permit to the Perpetual Operation and Maintenance Entity

Instructions: Complete this form to transfer ~~to~~ the permit to the operation and maintenance entity. This form can be completed concurrently with, or within 30 days of approval of, the As-Built Certification and Request for Conversion to Operation Phase (Form 62-330.310(1)). Please include all documentation required under Section 12.2.1(b) of Applicant's Handbook Volume I (see checklist below). **Failure to submit the appropriate final documents will result in the permittee remaining liable for operation and maintenance of the permitted activities.**

Permit No.: Application No(s):

Project Name: Phase (if applicable):

A. Request to Transfer: The permittee requests that the permit be transferred to the legal entity responsible for operation and maintenance (O&M).

By: _____ _____

Signature of Permittee — Name and Title

_____ _____

Company Name — Company Address

_____ _____

Phone/email address — City, State, Zip

B. Agreement for System Operation and Maintenance Responsibility: The below-named legal entity agrees to operate and maintain the works or activities in compliance with all permit conditions and provisions of Chapter 62-330, Florida Administrative Code (F.A.C.) and Applicant's Handbook Volumes I and II.

The operation and maintenance entity does not need to sign this form if it is the same entity that was approved for operation and maintenance in the issued permit.

Authorization for any proposed modification to the permitted activities shall be applied for and obtained prior to conducting such modification.

By: _____ _____

Signature of Representative of O&M Entity — Name of Entity for O&M

_____ _____

Name and Title — Address

_____ _____

Email Address — City, State, Zip

_____ _____

Phone — Date

Enclosed are the following documents, as applicable:

☐ Copy of recorded transfer of title to the operating entity for the common areas on which the stormwater management system is located (unless dedicated by plat)
☐ Copy of all recorded plats
☐ Copy of recorded declaration of covenants and restrictions, amendments, and associated exhibits
☐ Copy of filed articles of incorporation (if filed before 1995)
☐ ~~A~~ Completed documentation that the operating entity meets the requirements of Section 12.3 of Environmental Resource Permit Applicant's Handbook Volume I. (Note: this is optional, but aids in processing of this request)

As-Built Certification
And Request for Conversion to Operation Phase

Instructions: Complete and submit this page within 30 days of completion of the entire project, or any independent portion of the project, as required by the permit conditions. The operation phase of the permit is effective when the construction certification for the entire permit/application is approved by the Agency. If the final operation and maintenance entity is not the permittee, the permittee shall operate the project, system, works, or other activities temporarily until such time as the transfer to the operation entity is finalized (use Form 62-330.310(2)).

Permit No: Application No: Permittee:

Project Name: Phase or Independent Portion (if applicable):

I HEREBY CERTIFY THAT (please check only one box):

☐ To the best of my knowledge, information, and belief, construction of the project has been completed in substantial conformance with the plans specifications and conditions permitted by the Agency. Any minor deviations will not prevent the project from functioning in compliance with the requirements of Chapter 62-330, F.A.C. Attached are documents to demonstrate satisfaction of the outstanding permit conditions, other than long term monitoring and inspection requirements.

☐ Construction of the project was NOT completed in substantial conformance with the plans and specifications permitted by the Agency. Any deviations or independent phasing will not prevent the project from functioning in compliance with the requirements of Chapter 62-330, F.A.C. (Contact the permitting agency to determine whether a modification of the permit will be required in accordance with Rule 62-330.315, F.A.C.) Attached is a description of substantial deviations, a set of as-built drawings, and documents to demonstrate satisfaction of the outstanding permit conditions, other than long term monitoring and inspection requirements.

☐ Construction of the project was NOT completed in substantial conformance with the plans and specifications permitted by the Agency. There are substantial deviations that prevent the project from functioning in compliance with the requirements of Chapter 62-330, F.A.C. I acknowledge that corrections to the project and/or a modification of the permit will likely be required, and that conversion to the operation phase cannot be approved at this time. As-built or record drawings reflecting the substantial deviations are attached.

For activities that require certification by a registered professional*:*

By: _____ (Print Name) (Fla. Lic. or Reg. No.)
Signature

(Company Name) (Company Address)

(Telephone Number) (Email Address)

AFFIX SEAL

(Date)

For activities that do not require certification by a registered professional:

By: _____ (Print Name)
Signature

(Company Name) (Company Address)

(Telephone Number) (Email Address) (Date)

Drawings and Information Checklist

Following is a list of information that is to be verified and/or submitted by the Registered Professional or Permittee:

1. All surveyed dimensions and elevations shall be certified by a registered Surveyor or Mapper under Chapter 472, F.S.

2. The registered professional's certification shall be based upon on-site observation of construction (scheduled and conducted by the registered professional of record or by a project representative under direct supervision) and review of as-built drawings, with field measurements and verification as needed, for the purpose of determining if the work was completed in accordance with original permitted construction plans, specifications, and conditions.

3. If submitted, the as-built drawings are to be based on the permitted construction drawings revised to reflect any substantial deviations made during construction. Both the original design and constructed condition must be clearly shown. The plans need to be clearly labeled as "as-built" or "record" drawings that clearly highlight (such as through "red lines" or "clouds") any substantial deviations made during construction. As required by law, all surveyed dimensions and elevations required shall be verified and signed, dated, and sealed by an appropriate registered professional. The following information, at a minimum, shall be verified on the as-built drawings~~,~~ and supplemental documents if needed:

    a. Discharge structures - Locations, dimensions and elevations of all, including weirs, orifices, gates, pumps, pipes, and oil and grease skimmers;
    b. Detention/Retention Area(s) – Identification number, size in acres, side slopes (h:v), dimensions, elevations, contours, or cross-sections of all, sufficient to determine stage-storage relationships of the storage area and the permanent pool depth and volume below the control elevation for normally wet systems,
    c. Side bank and underdrain filters, or exfiltration trenches - locations, dimensions, and elevations of all, including clean-outs, pipes, connections to control structures, and points of discharge to receiving waters;
    d. System grading - dimensions, elevations, contours, final grades, or cross-sections to determine contributing drainage areas, flow directions, and conveyance of runoff to the system discharge point(s);
    e. Conveyance - dimensions, elevations, contours, final grades, or cross-sections of systems utilized to divert off-site runoff around or through the new system;
    f. Benchmark(s) - location and description (minimum of one per major water control structure);
    g. Datum- All elevations should be referenced to a vertical datum clearly identified on the plans, preferably the same datum used in the permit plans.

4. Wetland mitigation or restoration areas - Show the plan view of all areas, depicting a spatial distribution of plantings conducted by zone (if plantings are required by permit), with a list showing all species planted in each zone, numbers of each species, sizes, date(s) planted, and identification of source of material; also provide the dimensions, elevations, contours, and representative cross-sections depicting the construction.

5. A map depicting the phase or independent portion of the project being certified, if all components of the project authorized in the permit are not being certified at this time.

6. Any additional information or outstanding submittals required by permit conditions or to document permit compliance, other than long-term monitoring or inspection requirements.

Request to Transfer
Environmental Resource Permit

Instructions: To be completed, executed, and submitted by the new owner to the Agency within 30 days after any transfer of ownership or control of the real property where the permitted activity is located.

Use of this form is not required when a valid permit is in the operation and maintenance phase. In such case, the owner must notify the Agency in writing within 30 days of a change in ownership or control of the entire real property, project, or activity covered by the permit. The notification may be by letter or e-mail, or through use of this form, and must be sent to the office that issued the permit. A processing fee is not required for this notice. The permit shall automatically transfer to the new owner or person in control, except in cases of abandonment, revocation, or modification of a permit as provided in Sections 373.426 and 373.429, F.S. (2013). If a permittee fails to provide written notice to the Agency within 30 days of the change in ownership or control, or if the change does not include the entire real property or activity covered by the permit, then the transfer must be requested using this form.

Permit No: Application No(s).: Acres to be Transferred:

Permitted Project:

Proposed Project Name (if different):

Phase of Project (if applicable):

I hereby notify the Agency that I have acquired ownership or control of the land on which the permitted system is located through the sale or other legal transfer of the land. By signing below, I hereby certify that I have sufficient real property interest or control in the land in accordance with subsection 4.2.3(d) of Applicant's Handbook Volume I; attached is a copy of my title, easement, or other demonstration of ownership or control in the land, including any revised plats, as recorded in the Public Records. I request that the permit be modified to reflect that I agree to be the new permittee. By so doing, I acknowledge that I have examined the permit terms, conditions, and drawings, and agree to accept all rights and obligations as permittee, including agreeing to be liable for compliance with all of the permit terms and conditions, and to be liable for any corrective actions required as a result of any violations of the permit after approval of this modification by the Permitting Agency. Also attached are copies of any recorded restrictive covenants, articles of incorporation, and certificate of incorporation that may have been changed as a result of my assuming ownership or control of the lands. As necessary, I agree to furnish the Agency with demonstration that I have the ability to provide for the operation and maintenance of the system for the duration of the permit in accordance with subsection 12.3 of Applicant's Handbook Volume I.

Name of Proposed Permittee:

Mailing Address:

City: State: Zip:

Telephone: E-mail:

_____ _____

Signature of Proposed Permittee Date:

_____

Name and Title

Enclosures:

☐ Copy of title, easement, or other demonstration of ownership or control in the land, as recorded in the Public Records

☐ Copy of current plat(s) (if any), as recorded in the Public Records

☐ Copy of current recorded restrictive covenants and articles of incorporation (if any)

☐ Other

CONSTRUCTION COMMENCEMENT NOTICE

Instructions: In accordance with Chapter 62-330.350(1)(d), F.A.C., complete and submit this form at least 48 hours prior to commencement of activity authorized by permit.

Permit No. _____ Application No. _____

Project Name _____ Phase _____

Construction of the system authorized by the above referenced Environmental Resource Permit and Application, is expected to commence on _____ , 20 _____ and will have an estimated completion date of _____ , 20 _____

PLEASE NOTE: If the actual construction commencement date is not known within 30 days of issuance of the permit, District staff should be so notified in writing. As soon as a construction commencement date is known, the permittee shall submit a completed construction commencement notice form.

Permittee's or Authorized Agent's Signature	Company	
Print Name	Title	Date
E-mail		Phone Number