The Enclosed Document Is Provided For Your Convenience.

Please Email ALL Questions:

MailTo:ContractAdministration@TampaGov.net

Please Let Us Know If You Plan To Bid

City of Tampa
Contract Administration Department
306 E. Jackson St. #280A4N
Tampa, FL 33602
(813)274-8456

CITY OF TAMPA

CITYWIDE BRIDGES MINOR REPAIRS

BRIDGE NO'S: 5, 6, 7, 8, 11, 13, 16, 17, 100086, 105501, 105502, 100507, 105600, 105605, 105606, 105608, 105610, 105612, 105618, 105622, 105623, 105625, 105626, 105627, 105628, 105629, 105906, 105908, 105912, 105913, 105915

PROJECT NO. TR0145

TRANSPORTATION DIVISION

DEPARTMENT OF PUBLIC WORKS

CITY OF TAMPA, FLORIDA

INDEX OF DRAWINGS

SHEET NO	DESCRIPTION
1	Key Sheet / Index
2	General Notes
3	Bridge Locations Map
4	Bridge Repair Estimated Quantities (1 of 2)
5	Bridge Repair Estimated Quantities (2 of 2)
6	Spall Repair Details
7	Slope Protection Details
8	Railing Details
9	Misc. Details

Prepared By:

VOLKERT, INC.
3409 West Lemon Street
Tampa, Florida 33609

APPROVED BY:

ALTAFHUSEN BUKHARI, P.E.
PROJECT MANAGER
DEPARTMENT OF PUBLIC WORKS

CERTIFICATION

SHEET 1

ENGINEER OF RECORD:
VOLKERT, INC.
3409 West Lemon Street
Tampa, Florida 33609
Certificate of Authorization No: 4641

Robert J. Harrigan, Jr., P.E. 4/19/13
Date
Certificate No. 45236

ROBERT J. HARRIGAN, JR. LICENSE FLORIDA PROFESSIONAL ENGINEER

GENERAL NOTES

GENERAL SPECIFICATIONS:

FLORIDA DEPARTMENT OF TRANSPORTATION (FDOT) STANDARD SPECIFICATIONS FOR ROAD AND BRIDGE CONSTRUCTION 2013 EDITION AND SUPPLEMENTS THERETO.

DESIGN SPECIFICATION:

1. AMERICAN ASSOCIATION OF STATE HIGHWAY AND TRANSPORTATION OFFICIALS (AASHTO) STANDARD SPECIFICATIONS FOR HIGHWAY BRIDGES (2002 EDITION), WITH APPLICABLE INTERIMS THROUGH 2003.
2. AASHTO STANDARD SPECIFICATIONS FOR MOVABLE HIGHWAY BRIDGES (1988 EDITION).

CONCRETE:

CLASS	MAXIMUM COMPRESSIVE STRESS (PSI)	MINIMUM 28-DAYS COMPRESSIVE STRENGTH (PSI)	DESIGN UNIT WEIGHT INCL. REINFORCING (PCF)	DESIGN MODULUS OF ELASTICITY (KSI)	LOCATION OF CONCRETE IN STRUCTURE
IV	FC - 2,200	F'C - 5,500	150	3,846	RAILING
IV	FC - 2,200	F'C - 5,500	150	3,846	TRUNNION SUPPORT

CONCRETE DETAILS:

1. PROVIDE ¾" CHAMFERS ON ALL EXPOSED EDGES EXCEPT AS OTHERWISE NOTED.
2. CONSTRUCTIONS JOINTS WILL BE PERMITTED ONLY AT LOCATIONS INDICATED ON PLANS. ADDITIONAL CONSTRUCTION JOINTS OR ALTERATIONS TO THOSE SHOWN SHALL REQUIRE WRITTEN APPROVAL OF THE ENGINEER.
3. ALL DIMENSIONS PERTAINING TO LOCATIONS OF REINFORCING ARE TO CENTERLINE OF BARS EXCEPT WHERE THE CLEAR DIMENSION IS SHOWN TO FACE OF REINFORCING BAR.

EF	DENOTES	"EACH FACE"
NF	DENOTES	"NEAR FACE"
FF	DENOTES	"FAR FACE"
T&B	DENOTES	"TOP AND BOTTOM"
CL	DENOTES	"CLEAR"

BONDING COMPOUND:

BONDING COMPOUND SHALL BE APPLIED TO ALL SET CONCRETE PRIOR TO PLACING NEW CONCRETE UNLESS OTHERWISE NOTED. BONDING COMPOUND SHALL BE TYPE "A" EPOXY COMPOUND MEETING THE REQUIREMENTS OF SECTION 926 OF THE GENERAL SPECIFICATIONS. BONDING COMPOUNDS SHALL BE MIXED, APPLIED TO A PROPERLY PREPARED SURFACE AND CURED IN STRICT ACCORDANCE WITH THE MANUFACTURER'S RECOMMENDATIONS.

FIELD VERIFICATION:

DIMENSIONS SHOWN IN THE CONTRACT PLANS WERE OBTAINED FROM FIELD OBSERVATION, AND PREVIOUS CONTRACT PLANS AND SHOP DRAWINGS AND ARE INTENDED FOR INFORMATION AND ESTIMATING PURPOSES ONLY. THE CONTRACTOR IS RESPONSIBLE FOR FIELD VERIFICATION OF ALL DIMENSIONS AND CONDITIONS REQUIRED TO PERFORM THE RENOVATIONS. FAILURE BY THE CONTRACTOR TO FIELD VERIFY DIMENSIONS WILL NOT BE A JUSTIFICATIONS FOR CLAIMS.

MANUFACTURER'S REFERENCES & SUBSTITUTIONS:

REFERENCE TO A PARTICULAR MANUFACTURER, TRADE NAME, OR CATALOG NUMBER ESTABLISHES THE QUALITY STANDARDS OF MATERIAL AND EQUIPMENT REQUIRED FOR THIS INSTALLATION AND IS NOT INTENDED TO EXCLUDE PRODUCTS EQUAL IN QUALITY AND SIMILAR DESIGN. WHENEVER A MATERIAL OR EQUIPMENT IS DEFINED BY SPECIFYING A PROPRIETARY PRODUCT OR MANUFACTURER OR VENDOR NAME, THE TERM "OR APPROVED EQUAL," IF NOT INSERTED SHALL BE IMPLIED.

EQUIVALENT PRODUCTS MAY BE SUBSTITUTED BY THE CONTRACTOR, SUBSEQUENT TO THE PRODUCT BEING SUBMITTED FOR APPROVAL, PROVIDED THE CHANGE IS AT NO ADDITIONAL COST TO THE CITY.

WORKING DRAWINGS:

THE CONTRACTOR SHALL SUBMIT DETAILED SHOP DRAWINGS AND/OR MANUFACTURER'S LITERATURE FOR ALL NEW STRUCTURAL COMPONENTS TO BECOME PART OF THE FINAL STRUCTURE AND FACILITIES. SUCH DRAWINGS SHALL INCLUDE ALL DIMENSIONS, FITS, FINISHES, MATERIALS, AND SPECIAL INSTRUCTIONS REQUIRED TO PROPERLY CONSTRUCT, FABRICATE, AND INSTALL THESE COMPONENTS. FIELD VERIFIED DIMENSIONS SHALL BE SHOWN AND CLEARLY IDENTIFIED AS SUCH IN THE SHOP DRAWINGS.

MAINTENANCE OF TRAFFIC:

FDOT STANDARD INDEX 600 PROVISIONS SHALL GOVERN MAINTENANCE OF TRAFFIC. CONTRACTOR SHALL SUBMIT A PLAN FOR CITY APPROVAL WHERE TRAFFIC CONTROL IS NECESSARY.

BOLTS:

BOLTS FOR STRUCTURAL STEEL CONNECTIONS SHALL BE ASTM A325 TYPE 1, HIGH STRENGTH BLACK BOLTS. BOLTS SHALL BE COMPLETE WITH NUT AND WASHER(S). BEVELED WASHERS SHALL BE USED ON TAPERED FLANGES. BOLTS REMOVED (TEMPORARILY OR NOT) SHALL NOT BE REUSED. BOLTS SHALL BE ⅞" DIA. UNLESS OTHERWISE SPECIFIED.

ANCHOR BOLTS SHALL BE AS SHOWN IN THE PLANS AND AS DEFINED IN THE SPECIFICATIONS.

WELDING:

WELD DETAILS AND THE WELDING OPERATIONS SHALL BE IN ACCORDANCE WITH THE CURRENT EDITION OF THE ANSI/AASHTO/AWS D1.5 BRIDGE WELDING CODE. DOCUMENTATION OF THEIR QUALIFICATIONS TO PERFORM THE SPECIFIC WELDING TASK IN ACCORDANCE WITH THE APPROPRIATE CODE GOVERNING THE WORK IS REQUIRED PRIOR TO PERMITTING WELDERS, WELDING OPERATORS, OR TACKERS TO PERFORM WELDING ON THE STRUCTURE.

BRIDGE NOTES: (REFERENCED ON BRIDGE REPAIR ESTIMATED QUANTITIES SHEETS)

BRIDGE #7 - CHANNEL EXCAVATION IS TO RESTORE DRAINAGE DITCH TO ORIGINAL CONTOURS.

BRIDGE #105600 - STRUCTURAL STEEL CONSISTS OF REPAIRS/REPLACEMENTS FOR HANDRAIL ANCHOR BOLTS AND NUTS. MATCH EXISTING HARDWARE.

BRIDGE #105622 - RIPRAP TO INCLUDE +/- 50 LF ON BACK SIDE OF APPROACH SIDEWALK.

BRIDGE #105623 - INJECT AND SEAL CRACK (3 LF), TO INCLUDE ROUTING.

BRIDGE #105628 - BRIDGE DECK EXPANSION JOINT (POURABLE) IS ON SIDEWALK, NOT ON BRIDGE DECK.

BRIDGE #105915 - REPAIR SCOUR HOLE USING TOE SLAB DETAIL.

PAY ITEM NOTES:

1. PAYMENT FOR INCIDENTAL ITEMS NOT SPECIFICALLY COVERED IN THE INDIVIDUAL PAY ITEMS SHALL BE INCLUDED IN THE CONTRACT UNIT PRICES FOR PAY ITEMS. DEMOLITION AND REMOVAL SHALL BE INCIDENTAL UNLESS NOTED OTHERWISE.
2. THE COST OF REINFORCING STEEL SHALL BE CONSIDERED TO BE INCIDENTAL TO CONCRETE SPALL REPAIR AND DECK JOINT REHABILITATION RESPECTIVELY.

SCOPE OF WORK NOTES:

1. WHEN WORKING AT A BRIDGE SITE, THE GENERAL INTENT IS TO ADDRESS ALL WORK AT THAT BRIDGE. THE ACTUAL SEQUENCE OF BRIDGES TO BE ADDRESSED WILL BE AS DIRECTED BY THE CITY.
2. THESE PLANS ARE INTENDED TO ADDRESS DEFICIENCIES IDENTIFIED IN THE LATEST BRIDGE INSPECTION REPORT AND TO BE USED WITH THOSE REPORTS FOR LOCATIONS OF SPECIFIC DEFICIENCIES.
3. WORK DEPICTED IN THESE PLANS IS OF A GENERALIZED NATURE AND CERTAIN DECISIONS IN THE FIELD BY THE CITY AND CONTRACTOR ARE REQUIRED. ACTUAL QUANTITIES MAY BE HIGHER OR LOWER THAN THOSE ESTIMATED.

ROBERT J. HARRIGAN JR. LICENSED No. 45236 STATE OF FLORIDA PROFESSIONAL ENGINEER

Robert J. Harrigan Jr. 4/19/13

ENGINEER OF RECORD:
VOLKERT & ASSOCIATES, INC.
3409 West Lemon Street
Tampa, Florida 33609
Certificate of Authorization No. 4641
Robert J. Harrigan, Jr., P.E. No. 45236

DRAWN: KES	DATE: 9/04	△
DESIGNED: RJH	DATE: 9/04	△
CHECKED: TCW	DATE: 9/04	△
REVIEWED: RJH	DATE: 9/04	△
APPROVED: TCW	DATE: 9/04	△
APPROVED:	DATE: 9/04	NO: DATE: REVISION: BY:

CITY OF TAMPA
DEPARTMENT OF PUBLIC WORKS
TRANSPORTATION DIVISION

CITYWIDE BRIDGES MINOR REPAIRS
GENERAL NOTES

FIELD BOOK:
ATLAS SHEET:
FILE NO. INDEX NO
JOB NO.
SCALE:
SHEET 2

4/18/2013 3:31:53: RWORK - FLORIDA\CITY OF TAMPA\MINOR REPAIRS TO BRIDGES\CADD\GNOTES.DGN

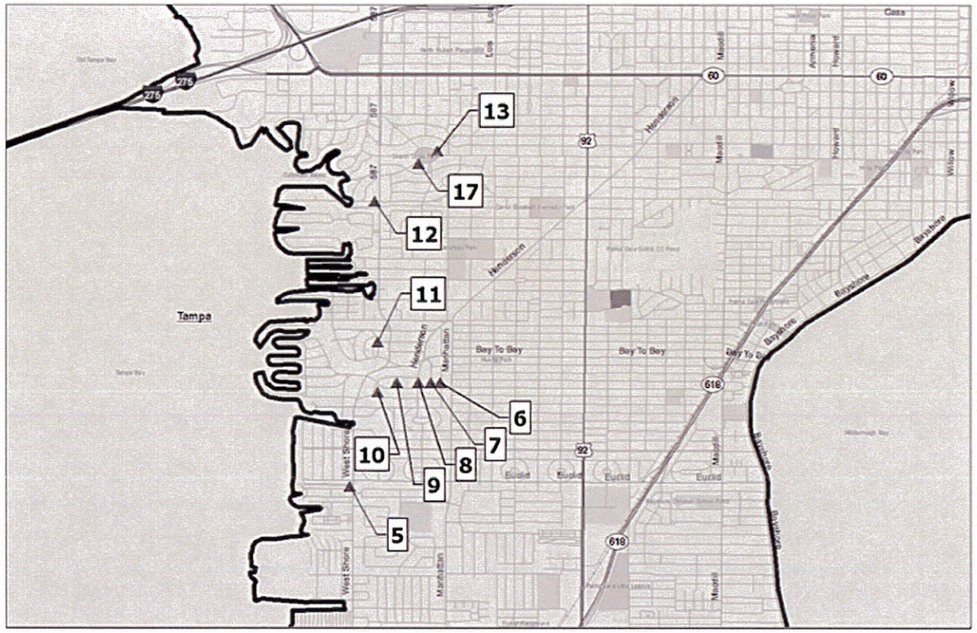

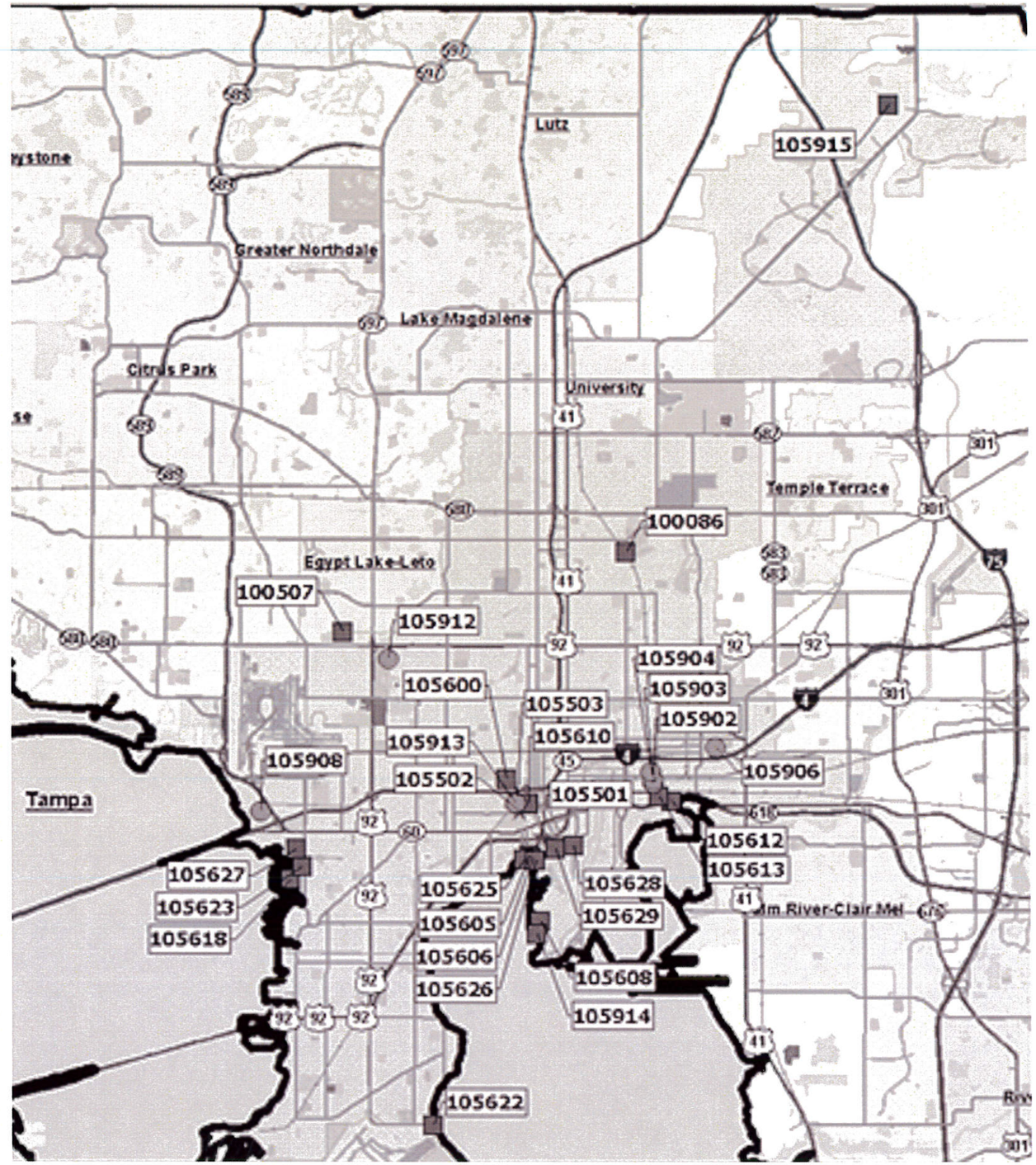

Robert J. Harrigan, Jr.
4/19/13

ENGINEER OF RECORD: VOLKERT & ASSOCIATES, INC. 3409 West Lemon Street Tampa, Florida 33609 Certificate of Authorization No. 4641 Robert J. Harrigan, Jr., P.E. No. 45236	DRAWN: KES DATE: 9/04					CITY OF TAMPA DEPARTMENT OF PUBLIC WORKS TRANSPORTATION DIVISION	CITYWIDE BRIDGES MINOR REPAIRS BRIDGE LOCATIONS MAP
	DESIGNED: RJH DATE: 9/04						
	CHECKED: TCW DATE: 9/04						
	REVIEWED: RJH DATE: 9/04						
	APPROVED: TCW DATE: 9/04						
	APPROVED: DATE: 9/04	NO:	DATE:	REVISION:	BY:		

FIELD BOOK:
ATLAS SHEET:
FILE NO.
JOB NO.
SCALE:
SHEET 3
INDEX NO

4/4/2013 \WORK10\R4055.AM\CITY OF TAMPA\MINOR REPAIRS TO BRIDGES\CADD\BRIDGE LOCATION MAP.DGN

BRIDGE NUMBER	BRIDGE NAME	BRIDGE LOCATION	121-70 Flowable Fill (CY)	110-4 Removal of Exist. Pavement (SY)	120-5 Channel Excavation (CY)	120-6 Embankment (CY)	327-70-1 Milling (1" Avg Depth) (SY)	334-1-11 Superpave Asph. Conc. (TN)	337-7-33 Asphalt Conc. Friction Course (TN)	339-1 Misc. Asphalt Pavement (TN)	400-0 Conc. Class NS (CY)	400-1 Conc. Class I (misc.) (CY)	400-2 Conc. Class II (Approach Slab) (CY)	400-4 Conc. Class IV (CY)	400-32 Concrete for Joint Repair (CY)	401-70-5 Restore Spalled Areas (CF)	411-2 Cracks, Inject & Seal, Struct Rehab (LF)
105610	Ashley Street Ramp	Ashley St. Ramp to I-275	---	---	---	---	225	41	10	---	---	---	---	---	---	15	---
105600	Eugene Holtsinger Bridge	North Blvd. at Hillsborough River	---	---	---	---	---	---	---	---	---	---	---	---	1	16	---
105612	31st Street / 29th Street Outfall	31st / 29th Streets at SR-60 (Adamo Dr.)	---	---	---	---	---	---	---	---	---	---	---	---	---	3	16
105605	Davis Island Bridge	Bayshore Blvd. / Hyde Park Ave.	---	---	---	---	---	---	---	---	---	---	---	---	---	52	---
105627	Neptune Way / Shorecrest Canal	0.1 Mile W. of Westshore Blvd	---	---	---	3	---	---	---	---	---	---	---	---	---	1	---
105623	Garden Club Drive / Lily Canal	25 ft E. of Grove Park Ave.	---	---	---	---	107	18	---	---	---	---	---	---	---	---	3*
105912	Himes Avenue over Rusty Canal	Himes Ave. 0.2 Mile S. of Hillsborough Ave.	---	---	---	1	---	---	---	---	1	---	---	---	---	1	---
100086	CR 585 Rowlett Park Drive	N.N.E. Tampa / Hillsborough River	---	---	---	13	---	---	---	---	---	---	---	---	---	2	---
105629	S. Harbour Island Blvd. / Garrison Channel	0.2 Mile S. of Channelside Dr.	---	---	---	6	---	---	---	---	---	---	---	---	---	3	---
105618	Culbreath Isles Dr / Salt Bayou	Culbreath Isles	---	---	---	---	---	---	---	---	---	---	---	---	---	1	1
105906	Apex Drain at 43rd Street	43rd St. at Columbus Dr.	---	---	---	3	200	22	---	1	---	---	---	---	---	---	---
8	Schiller St. over Drainage Canal	150 ft N. of Lumb Avenue	1	---	---	---	---	---	---	---	---	5	---	---	---	---	---
6	Emerson St. over Drainage Canal	150 ft N. of Lumb Avenue	1	---	---	---	---	---	---	---	---	---	---	1	---	38	---
13	Swann Circle over Drainage Creek	At Woodmere Road on E. side of circle	---	---	---	---	---	---	---	---	---	5	---	---	---	3	---
17	Swann Circle over Drainage Creek	At Woodmere Road on W. side of circle	---	---	---	---	---	---	---	---	---	---	---	---	---	1	---
11	S. Parkview St. over Saltwater Bayou	At Browning Avenue	1	---	---	---	---	---	---	---	---	---	---	---	---	---	---
7	West Keats St. over Drainage Canal	150 ft N. of Lumb Avenue	---	---	60*	---	---	---	---	---	---	5	---	---	---	5	---
100507	Lois Avenue over Henry St. Canal	0.5 Mile N. of Hillsborough Avenue	---	---	---	---	---	---	---	---	---	---	---	---	---	---	---
105625	On-Ramp to Davis Island Boulevard	North Bayshore Blvd. / Upper Hillsborough Bay	---	---	---	---	---	---	---	---	---	---	---	---	---	21	16
105606	Plant Avenue Bridge	North Bayshore Blvd. / Upper Hillsborough Bay	---	---	---	1	---	---	---	---	---	---	---	---	4	125	---
105626	Off-Ramp to Tampa General Hospital	Davis Island Blvd. Exit / T.G.H	---	---	---	---	---	---	---	---	---	---	---	---	---	45	---
105628	Beneficial Drive / Garrison Channel	0.2 Mile S. of Channelside Dr.	---	---	---	---	---	---	---	---	---	---	---	---	---	2	---
105913	Cypress Street / Drainage Canal	In Julian B. Lane Park	---	---	---	---	---	---	---	---	---	---	---	---	---	32	---
105608	West Davis Boulevard Bridge	West Davis Island	---	---	---	2	---	---	---	---	---	---	---	---	---	45	84
105908	Reo Street / Saltwater Bayou	Reo St. 65 ft S. of Cypress St.	---	---	---	---	---	---	---	---	---	---	---	---	---	5	---
105622	Bayshore Boulevard / Crayfish Camp	0.6 Mile N of MacDill AFB	---	---	---	4	---	---	---	---	---	---	---	---	---	---	---
105501	Brorein Street	Hillsborough River	---	---	---	---	---	---	---	---	---	---	---	---	---	18	---
105502	Cass Street Draw Bridge	Hillsborough River	---	---	---	---	---	---	---	---	---	---	---	---	---	8	3
105915	New Tampa Boulevard / Trout Creek	New Tampa Blvd. 0.4 Mile W. of CR-581	---	---	---	6	245	27	10	---	1	---	---	---	---	---	---
5	Westshore Blvd. over Saltwater Canal	150 ft S. of W. Euclid Avenue	1	---	---	---	---	---	---	---	---	5	---	1	---	1	---
16	W. Sylvan Ramble St. over Drainage Creek	At Woodmere Road	---	16	---	---	---	---	---	---	---	---	---	---	---	---	---
	TOTAL	TOTAL	4	16	0	39	777	108	20	1	3	22	0	2	5	443	123

*See bridge notes sheet 2

Quantity shown for each bridge is estimated from FDOT bridge inspection reports. However, actual quantity for repair of each bridge will vary.

ROBERT J. HARRIGAN, JR. LICENSE 45236 STATE OF FLORIDA PROFESSIONAL ENGINEER

Robert J. Harrigan, Jr.
4/18/13

ENGINEER OF RECORD:
VOLKERT & ASSOCIATES, INC.
3409 West Lemon Street
Tampa, Florida 33609
Certificate of Authorization No. 4641
Robert J. Harrigan, Jr., P.E. No. 45236

DRAWN: KES DATE: 9/04
DESIGNED: RJH DATE: 9/04
CHECKED: TCW DATE: 9/04
REVIEWED: RJH DATE: 9/04
APPROVED: TCW DATE: 9/04
APPROVED: DATE: 9/04

NO.	DATE	REVISION	BY

CITY OF TAMPA
DEPARTMENT OF PUBLIC WORKS
TRANSPORTATION DIVISION

CITYWIDE BRIDGES MINOR REPAIRS
BRIDGE REPAIR ESTIMATED QUANTITIES (1 OF 2)

FIELD BOOK:
ATLAS SHEET:
FILE NO.
JOB NO.
SCALE:
SHEET 4
INDEX NO

4/18/2013 4:03:03 PM FLORIDA\CITY OF TAMPA\MINOR REPAIRS TO BRIDGES\CADD\QUANTITIESI.DGN

BRIDGE NUMBER	BRIDGE NAME	430-950 Desilting Box Culvert (CY)	457-1-22 Structural Pile Jacket (LF)	458-1-21 Bridge Deck Exp. Joint (LF)	460-95 Structural Steel (LB)	514-71-2 Plastic Filter Fabric (SY)	515-2-313 Pedestrian / Bridge Railing (LF)	520 Curbs, Curb & Gutter (LF)	522-1 4" Concrete Sidewalk (SY)	524-2 Conc. Slope Pavement (Non-Reinforced 4") (SY)	530-1 Riprap (Sand Cement) (CY)	536-1-1 Guardrail (LF)	536-7 Remove Guardrail (LF)	536-8 Bridge Anchorage Assemblies (EA)	536-8-6 Remove Anchorage Assemblies (EA)	536-83-1 Timber Guardrail Posts (EA)	536-85 Flared End Anchorage Assemblies (EA)	700-48-28 Replace Sign (EA)	705-10-13 Object Marker (Type 3) (EA)
105610	Ashley Street Ramp	---	---	147	---	---	---	8 Type D	---	---	---	---	---	---	---	---	---	---	---
105600	Eugene Holtsinger Bridge	---	---	15	20*	160	---	---	3	---	45	---	---	---	---	---	---	---	---
105612	31st Street / 29th Street Outfall	---	---	---	---	---	---	---	---	---	---	---	---	---	---	4	---	---	---
105605	Davis Island Bridge	---	10	---	---	---	---	---	---	---	---	---	---	---	---	---	---	---	---
105627	Neptune Way / Shorecrest Canal	---	---	69	---	---	---	---	---	3	---	---	---	---	---	1	---	---	---
105623	Garden Club Drive / Lily Canal	---	---	---	---	---	---	---	---	---	---	---	---	---	---	---	---	---	---
105912	Himes Avenue over Rusty Canal	---	---	---	---	1	---	---	---	---	1	---	---	---	---	---	---	---	---
100086	CR 585 Rowlett Park Drive	---	---	16	---	70	---	---	---	---	20	100	100	2	4	---	2	---	---
105629	S. Harbour Island Blvd. / Garrison Channel	---	---	---	---	2	---	---	---	---	1	---	---	---	---	---	---	---	---
105618	Culbreath Isles Dr / Salt Bayou	---	---	---	---	---	---	---	---	---	---	---	---	---	---	---	---	---	---
105906	Apex Drain at 43rd Street	---	---	---	---	4	---	---	---	---	1	13	13	---	1	---	1	---	---
8	Schiller St. over Drainage Canal	34	---	---	---	200	---	10 Type F	---	---	---	---	---	---	---	---	---	---	4
6	Emerson St. over Drainage Canal	23	---	---	---	---	---	---	---	---	---	---	---	---	---	---	---	---	4
13	Swann Circle over Drainage Creek	---	---	---	---	---	---	---	---	---	---	---	---	---	---	---	---	---	4
17	Swann Circle over Drainage Creek	---	---	---	---	---	---	61 Type D	---	---	---	---	---	---	---	---	---	---	4
11	S. Parkview St. over Saltwater Bayou	---	---	---	---	---	---	---	---	---	---	---	---	---	---	---	---	---	4
7	West Keats St. over Drainage Canal	35	---	---	---	---	---	---	---	---	---	---	---	---	---	---	---	---	4
100507	Lois Avenue over Henry St. Canal	---	---	---	---	---	---	---	---	---	---	---	---	---	---	---	---	---	---
105625	On-Ramp to Davis Island Boulevard	---	20	---	---	---	---	---	---	---	---	---	---	---	---	---	---	---	---
105606	Plant Avenue Bridge	---	---	244	---	2	282	---	---	---	1	---	---	---	---	---	---	---	---
105626	Off-Ramp to Tampa General Hospital	---	---	---	---	---	---	---	---	---	---	---	---	---	---	---	---	---	---
105628	Beneficial Drive / Garrison Channel	---	---	3*	---	---	---	---	---	---	---	---	---	---	---	---	---	---	---
105913	Cypress Street / Drainage Canal	---	---	---	---	---	---	---	---	---	---	---	---	---	---	---	---	---	---
105608	West Davis Boulevard Bridge	---	---	---	---	3	---	---	---	---	1	---	---	---	---	---	---	1	---
105908	Reo Street / Saltwater Bayou	---	---	---	---	---	---	---	---	---	1	---	---	---	---	---	---	---	---
105622	Bayshore Boulevard / Crayfish Camp	---	---	69	---	85	---	---	3**	---	25	---	---	---	---	---	---	---	---
105501	Brorein Street	---	---	---	---	---	---	---	---	---	---	---	---	---	---	---	---	---	---
105502	Cass Street Draw Bridge	---	---	---	---	---	---	---	---	---	---	---	---	---	---	---	---	---	---
105915	New Tampa Boulevard / Trout Creek	---	---	68	---	60	---	---	---	---	18*	---	---	---	---	---	---	---	---
5	Westshore Blvd. over Saltwater Canal	---	---	---	---	6	---	---	---	---	1	---	---	---	---	---	---	---	---
16	W. Sylvan Ramble St. over Drainage Creek	---	---	---	---	---	---	---	---	---	---	---	---	---	---	---	---	---	---
	TOTAL	92	30	631	20	593	282	79	6	3	97	113	113	2	5	5	3	1	24

* *See bridge notes sheet 2*

** *Includes handrail anchor bolts and remounting handrail with replacement sidewalk (4LF), see sheet 8*

ROBERT J. HARRIGAN JR. LICENSE 45236 STATE OF FLORIDA PROFESSIONAL ENGINEER

Robert J. Harrigan Jr. 4/19/13

ENGINEER OF RECORD:
VOLKERT & ASSOCIATES, INC.
3409 West Lemon Street
Tampa, Florida 33609
Certificate of Authorization No. 4641
Robert J. Harrigan, Jr., P.E. No. 45236

DRAWN: KES	DATE: 9/04	NO:	DATE:
DESIGNED: RJH	DATE: 9/04		
CHECKED: TCW	DATE: 9/04		
REVIEWED: RJH	DATE: 9/04		
APPROVED: TCW	DATE: 9/04		
APPROVED:	DATE: 9/04	REVISION:	BY:

CITY OF TAMPA
DEPARTMENT OF PUBLIC WORKS
TRANSPORTATION DIVISION

CITYWIDE BRIDGES MINOR REPAIRS
BRIDGE REPAIR ESTIMATED QUANTITIES (2 OF 2)

FIELD BOOK:
ATLAS SHEET:
FILE NO.
JOB NO.
SCALE:
SHEET 5
INDEX NO

4/18/2013 35 68WORK PM FLORIDA\CITY OF TAMPA\MINOR REPAIRS TO BRIDGES\CADD\QUANTITIES2.DGN

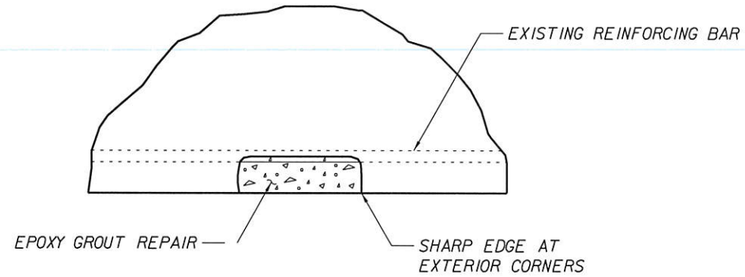

SPALL REPAIR DETAIL 1

(FOR SMALL ISOLATED SPALLS)

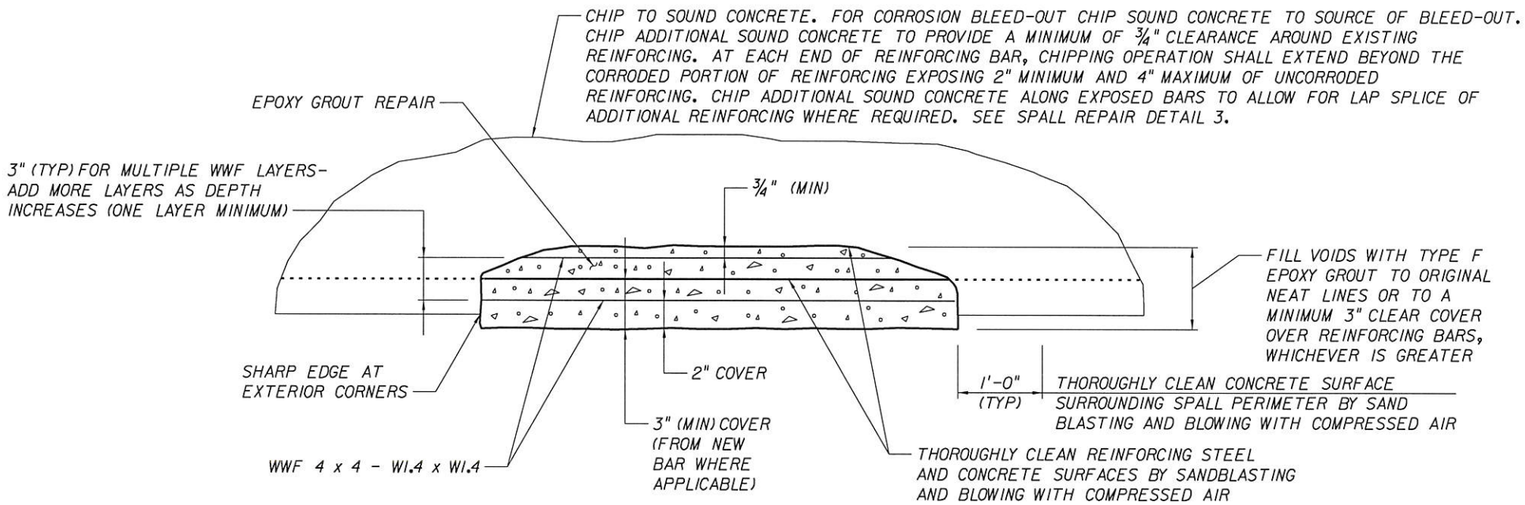

SPALL REPAIR DETAIL 2

COMPLETION OF CLEANING OPERATIONS AND COVERAGE OF REINFORCING STEEL BY EPOXY SHALL OCCUR WITHIN THE SAME DAY

SPALL REPAIR DETAIL 4

FOR REPAIR OF UNDERWATER SPALL USE SPEED CRETE BLUE LINE AS MANUFACTURED BY TAMMS INDUSTRIES OR ENGINEER APPROVED EQUAL APPLIED IN ACCORDANCE WITH THE MANUFACTURERS RECOMMENDATIONS.

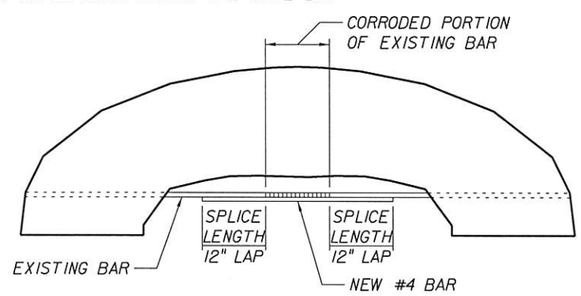

SPALL REPAIR DETAIL 3

SPALL REPAIR NOTES:

1. CHIP TO SOUND CONCRETE.
2. IF MORE THAN HALF OF PERIMETER OF REINFORCING BAR IS EXPOSED OR BOND AROUND BAR IS BROKEN USE DETAIL 2.
3. THOROUGHLY CLEAN REINFORCING STEEL AND CONCRETE SURFACES BY SANDBLASTING FOLLOWED BY BLOWING WITH COMPRESSED AIR.
4. PRIME THE SURFACE TO BE REPAIRED WITH TYPE F EPOXY, USING STIFF BRUSHES TO WORK INTO SURFACE.
5. WHILE PRIMING MATERIAL IS TACKY, FILL VOIDS WITH TYPE F EPOXY GROUT TO ORIGINAL NEAT LINES.
6. COMPLETION OF CLEANING OPERATIONS AND REPAIR SHALL OCCUR WITHIN THE SAME DAY.

SPLICE NOTES:

1. THIS DETAIL IS APPLICABLE WHEN THE EXISTING BAR EXHIBITS A 20% OR GREATER REDUCTION IN ITS CROSS SECTIONAL AREA.
2. FOR THE SPALL REPAIR USE DETAIL 2.

NOTES:

1. DETAILS ARE APPLICABLE TO ALL ORIENTATIONS: HORIZONTAL (INCLUDING OVERHEAD) AND VERTICAL.
2. EPOXY COMPOUND SHALL BE SUITABLE FOR OVERHEAD WORK AND SHALL BE LISTED ON THE FDOT QUALIFIED PRODUCTS LIST.
3. THERE MAY BE ADDITIONAL CRACKS AND SPALLS BEYOND THOSE ANTICIPATED. THE CONTRACTOR SHALL PERFORM A THOROUGH INVESTIGATION OF THE STRUCTURE TO LOCATE CRACKS, SPALLS AND DELAMINATION IN THE BRIDGE COMPONENTS, AND REPAIR THOSE AS DIRECTED BY THE ENGINEER.
4. PAYMENT FOR THE COSTS OF THE ABOVE INVESTIGATION SHALL BE INCLUDED IN THE RESPECTIVE ITEMS.

Robert J. Harrigan Jr.
4/19/13

ENGINEER OF RECORD:
VOLKERT & ASSOCIATES, INC.
3409 West Lemon Street
Tampa, Florida 33609
Certificate of Authorization No. 4641
Robert J. Harrigan, Jr., P.E. No. 45236

DRAWN: KES	DATE: 9/04	
DESIGNED: RJH	DATE: 9/04	
CHECKED: TCW	DATE: 9/04	
REVIEWED: RJH	DATE: 9/04	
APPROVED: TCW	DATE: 9/04	
APPROVED:	DATE: 9/04	

NO:	DATE:	REVISION:	BY:

CITY OF TAMPA
DEPARTMENT OF PUBLIC WORKS
TRANSPORTATION DIVISION

CITYWIDE BRIDGES MINOR REPAIRS
SPALL REPAIR DETAILS

FIELD BOOK:	
AJCAS SHEET:	
FILE NO:	INDEX NO
JOB NO:	
SCALE:	
SHEET 6	

4/4/2013 WORK FOLDER\DAMETY OF TAMPA\MINOR REPAIRS TO BRIDGES\CADD\SPALL REPAIR DETAILS.DGN

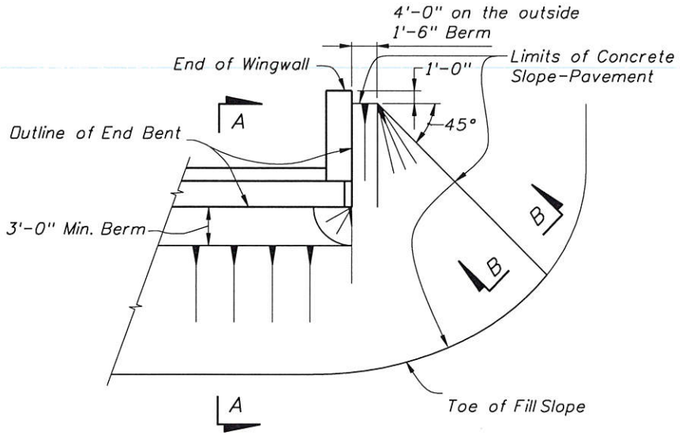

PARTIAL PLAN

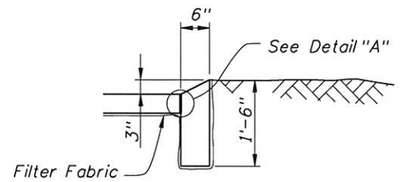

SECTION B-B

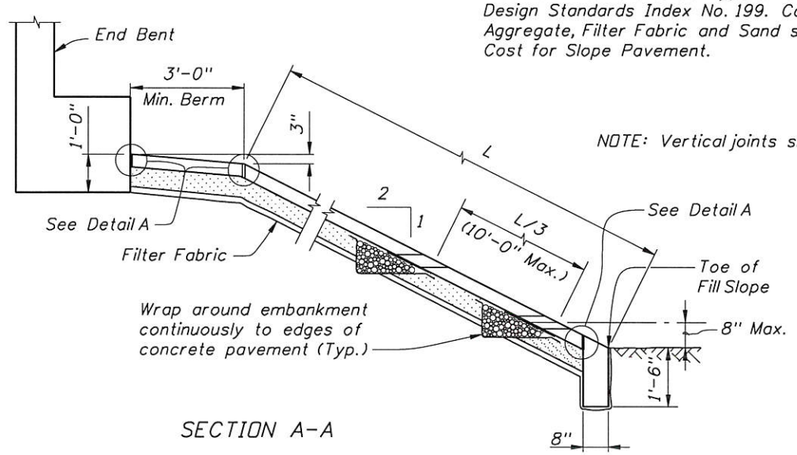

SECTION A-A

Note: The filter Fabric shall be Type D-6 in accordance with Design Standards Index No. 199. Cost of Holes, Wire Mesh, Aggregate, Filter Fabric and Sand shall be included in the Cost for Slope Pavement.

NOTE: Vertical joints shall be sealed.

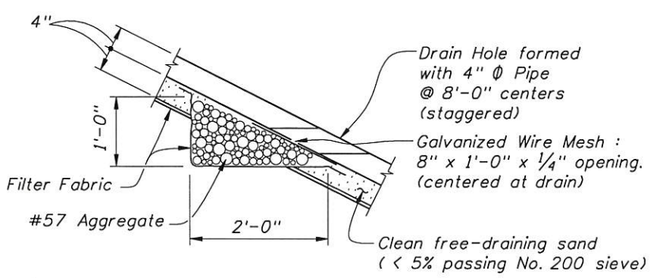

DRAIN DETAIL

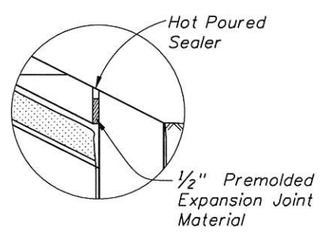

DETAIL A

CONCRETE SLOPE PAVEMENT PROTECTION ADJACENT TO ROAD

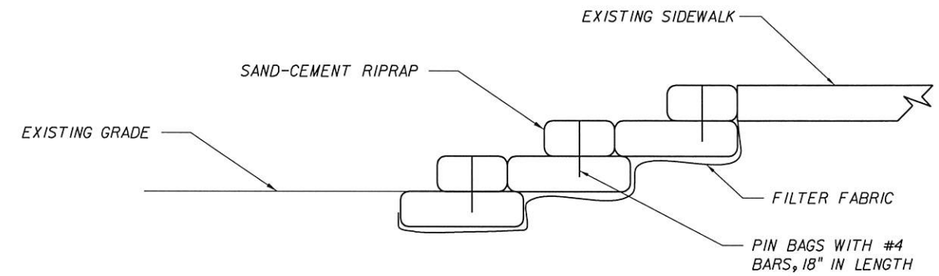

SAND-CEMENT REPAIR

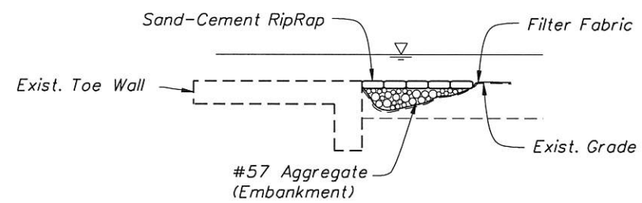

TOE SLAB UNDERMINING DETAIL

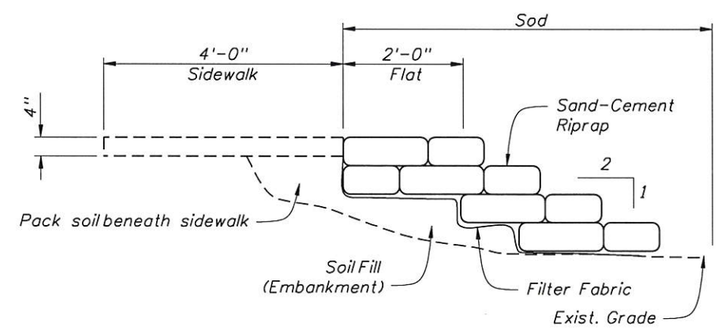

SIDEWALK UNDERMINING DETAIL

UNDERMINING REPAIRS

ROBERT J. HARRIGAN, JR. LICENSE NO. 45236 STATE OF FLORIDA PROFESSIONAL ENGINEER

Robert J. Harrigan Jr. 4/19/13

ENGINEER OF RECORD: VOLKERT & ASSOCIATES, INC. 3409 West Lemon Street Tampa, Florida 33609 Certificate of Authorization No. 4641 Robert J. Harrigan, Jr., P.E. No. 45236	DRAWN: KES DATE: 9/04	NO.	DATE:	REVISION:	BY:	CITY OF TAMPA DEPARTMENT OF PUBLIC WORKS TRANSPORTATION DIVISION	CITYWIDE BRIDGES MINOR REPAIRS SLOPE PROTECTION DETAILS	FIELD BOOK: ATLAS SHEET: FILE NO. INDEX NO JOB NO: SCALE: SHEET 7
	DESIGNED: RJH DATE: 9/04							
	CHECKED: TCW DATE: 9/04							
	REVIEWED: RJH DATE: 9/04							
	APPROVED: TCW DATE: 9/04							
	APPROVED: DATE: 9/04							

4/4/2013 WORK - RICOR10\SCAM OF TAMPA\MINOR REPAIRS TO BRIDGES\CADD\SLOPEPROTECTIONDETAILS.DGN

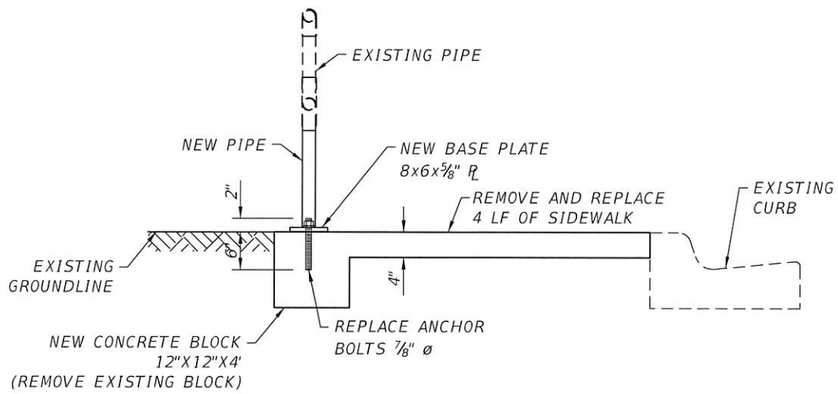

RAILING DETAIL BRIDGE 105912

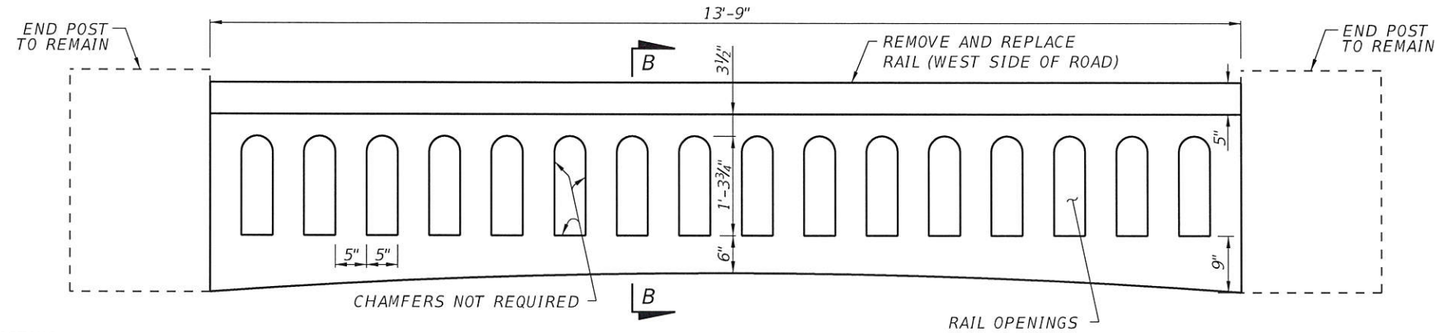

RAILING ELEVATION BRIDGE 13

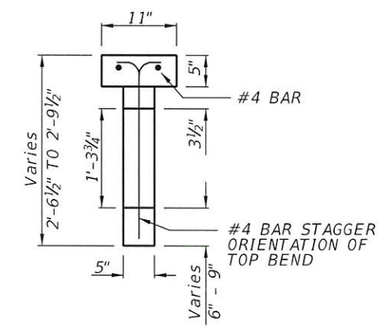

SECTION B-B

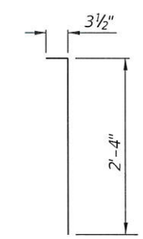

#4 BAR

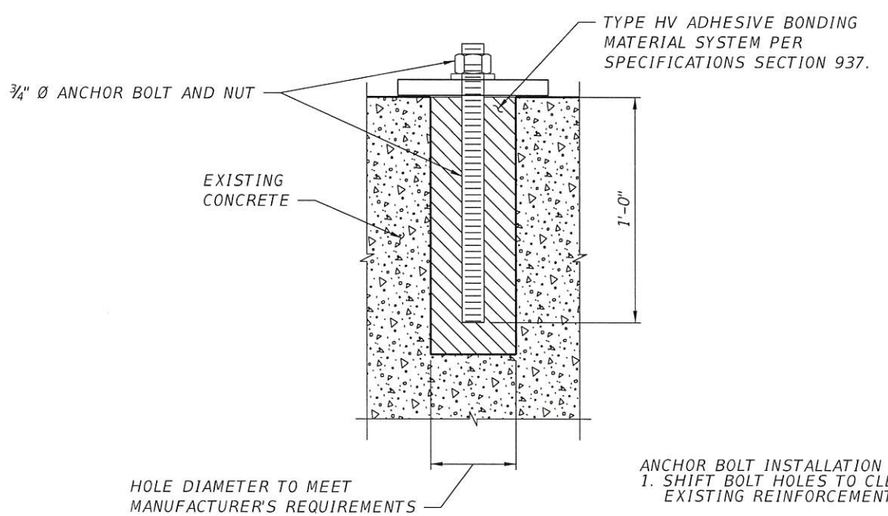

ANCHOR BOLT INSTALLATION NOTE:
1. SHIFT BOLT HOLES TO CLEAR IF THE EXISTING REINFORCEMENT IS ENCOUNTERED.

ANCHOR BOLT DETAIL BRIDGE 105600
(FOR HANDRAIL POSTS - NOT SHOWN)

NOTES:

1. SALVAGE 1'-6" OF ALL REINFORCING STEEL PROTRUDING FROM EXISTING CONCRETE TO REMAIN AND INCORPORATE INTO NEW CONCRETE.

2. PROVIDE 2" COVER ON REINFORCING STEEL.

ROBERT J. HARRIGAN, JR. LICENSED No. 45236 STATE OF FLORIDA PROFESSIONAL ENGINEER

Robert J. Harrigan Jr. 4/19/13

ENGINEER OF RECORD:
VOLKERT & ASSOCIATES, INC.
3409 West Lemon Street
Tampa, Florida 33609
Certificate of Authorization No. 4641
Robert J. Harrigan, Jr., P.E. No. 45236

DRAWN:	KES	DATE: 9/04	
DESIGNED:	RJH	DATE: 9/04	
CHECKED:	TCW	DATE: 9/04	
REVIEWED:	RJH	DATE: 9/04	
APPROVED:	TCW	DATE: 9/04	
APPROVED:		DATE: 9/04	

NO.	DATE:	REVISION:	BY:

CITY OF TAMPA
DEPARTMENT OF PUBLIC WORKS
TRANSPORTATION DIVISION

CITYWIDE BRIDGES MINOR REPAIRS
RAILING DETAILS

FIELD BOOK:	
ATLAS SHEET:	
FILE NO.	INDEX NO
JOB NO.	
SCALE:	
SHEET 8	

4/11/2013 9:07:54 AM WORK - FLORIDA\CITY OF TAMPA\MINOR REPAIRS TO BRIDGES\CADD\RAILING.DGN

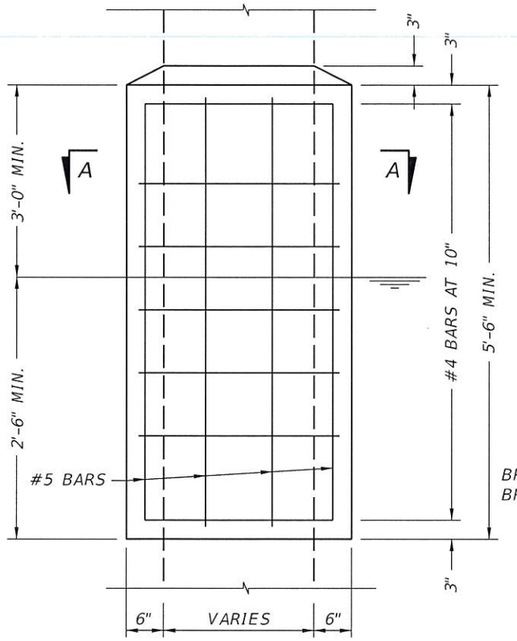

PILE JACKET ELEVATION

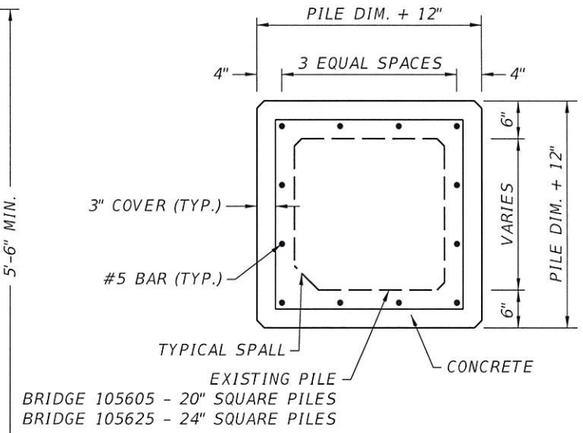

SECTION A-A

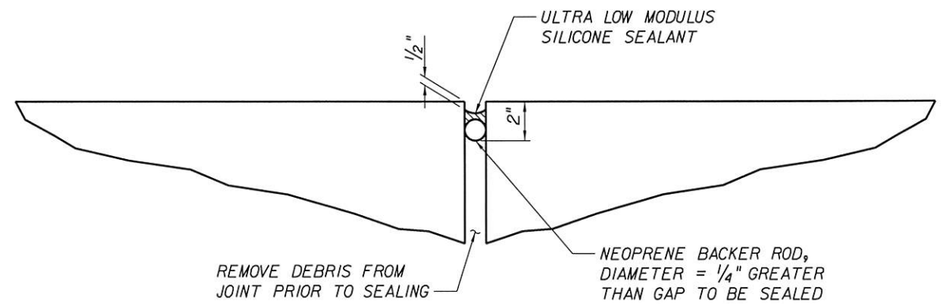

BRIDGE DECK EXPANSION JOINT

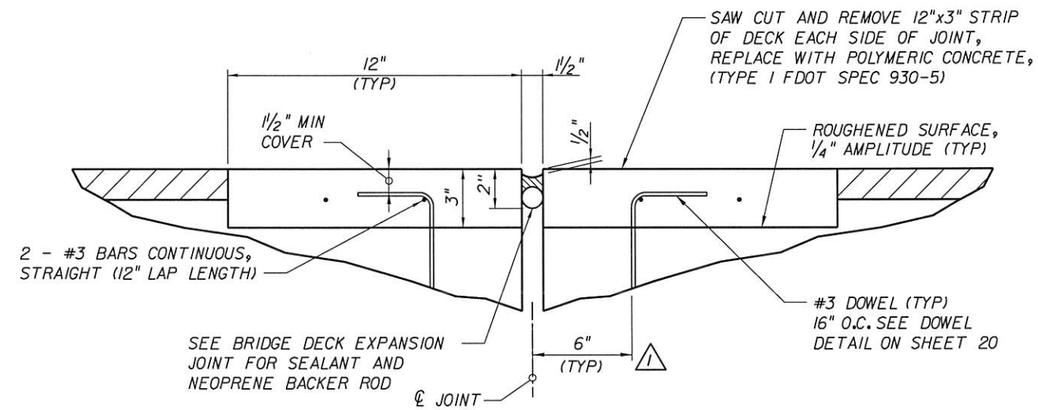

CONCRETE FOR JOINT REPAIR

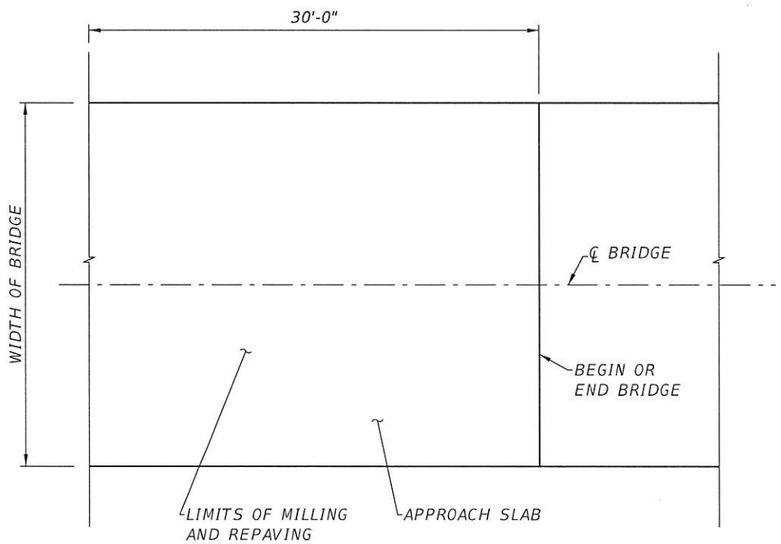

PLAN - LIMITS OF MILLING

SCHEDULE OF ASPHALT PAVEMENT REPAIRS

BRIDGES 105610, 105623, 105906 & 105915: MILL EXISTING ASPHALT PAVEMENT (1.0 INCH AVERAGE DEPTH)
BRIDGES 105610 & 105915: FRICTION COURSE FC-12.5 (1.5 INCHES) (RUBBER)
BRIDGE 150610: TYPE SP STRUCTURAL COURSE (TRAFFIC C) (2.0 INCHES)
BRIDGE 105623: TYPE SP STRUCTURAL COURSE (TRAFFIC C) (1.5 INCHES)
BRIDGE 105906: TYPE SP STRUCTURAL COURSE (TRAFFIC C) (2.5 INCHES)
BRIDGE 105915: TYPE SP STRUCTURAL COURSE (TRAFFIC C) (0.5 INCHES)

ROBERT J. HARRIGAN, JR. LICENSE No. 45236 STATE OF FLORIDA PROFESSIONAL ENGINEER
Robert J. Harrigan Jr.
4/19/13

ENGINEER OF RECORD: VOLKERT & ASSOCIATES, INC. 3409 West Lemon Street Tampa, Florida 33609 Certificate of Authorization No. 4641 Robert J. Harrigan, Jr., P.E. No. 45236	DRAWN: KES DATE: 9/04					CITY OF TAMPA DEPARTMENT OF PUBLIC WORKS TRANSPORTATION DIVISION	CITYWIDE BRIDGES MINOR REPAIRS MISC. DETAILS
	DESIGNED: RJH DATE: 9/04						
	CHECKED: TCW DATE: 9/04						
	REVIEWED: RJH DATE: 9/04						
	APPROVED: TCW DATE: 9/04						
	APPROVED: DATE: 9/04	NO.	DATE.	REVISION.	BY.		

FIELD BOOK:	
ATLAS SHEET:	
FILE NO.	INDEX NO
JOB NO.	
SCALE:	
SHEET 9	

4/4/2013 S:\DWG\PM\FLORIDA\CITY OF TAMPA\MINOR REPAIRS TO BRIDGES\CADD\MISC DETAILS.DGN