The Enclosed Document Is Provided For Your Convenience.

Please Email ALL Questions:

MailTo:ContractAdministration@TampaGov.net

City of Tampa
Contract Administration Department
306 E. Jackson St. #280A4N
Tampa, FL 33602
(813)274-8456

LOCATION MAP

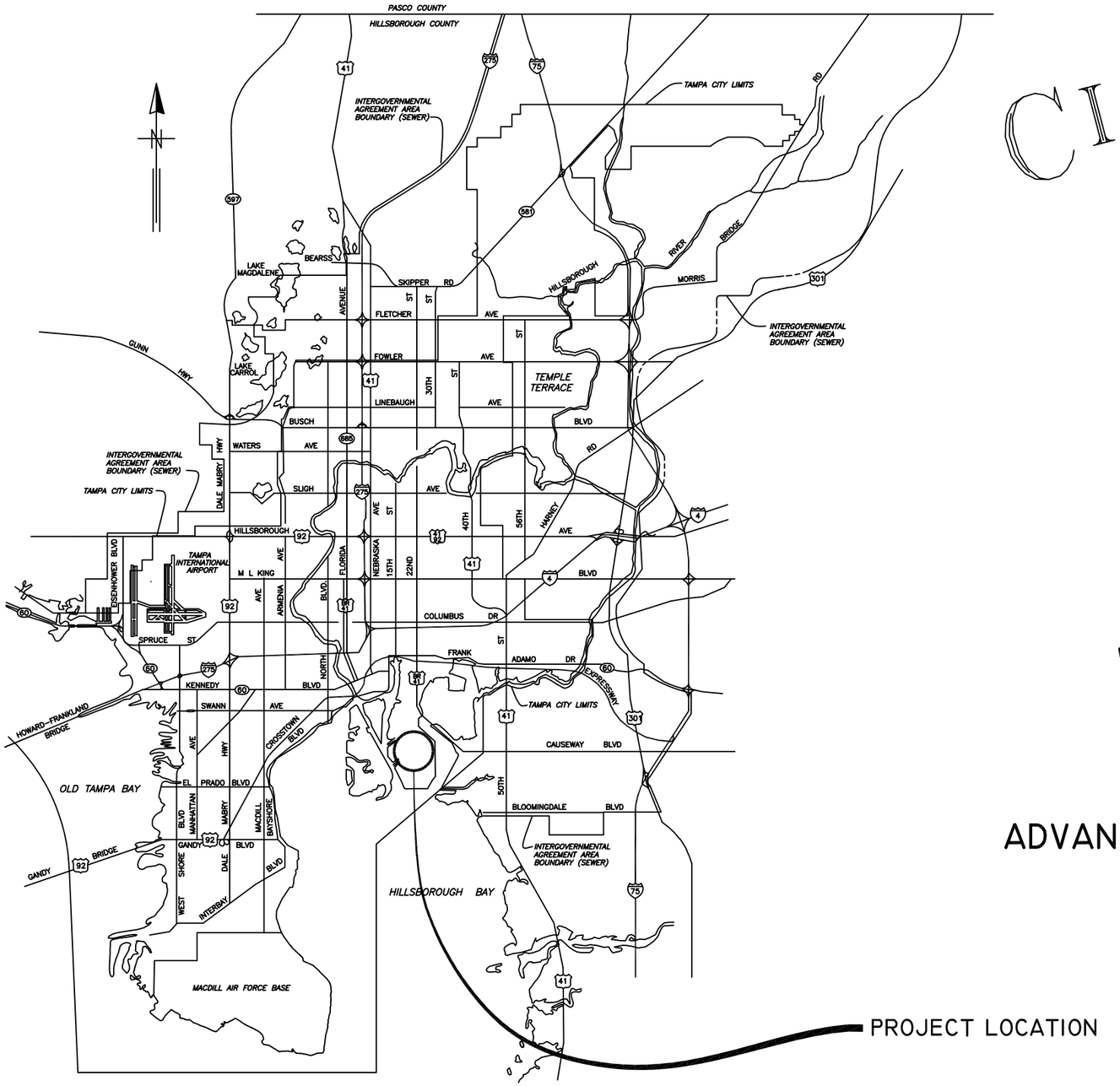

CITY of TAMPA

CITY OF TAMPA FLORIDA
ORGANIZED JULY 15 1887
MASCOTTE

WASTEWATER DEPARTMENT

PLANS FOR

HOWARD F. CURREN ADVANCED WASTEWATER TREATMENT PLANT

JUNCTION CHAMBER 2
SLUICE GATE REPLACEMENT

CONTRACT 18-C-000024

TRICON CONSULTING ENGINEERS
777 S. Harbour Island Blvd,
Suite 870
Tampa, FL 33602
813.227.9190
Certificate of Authorization No. 8363

JACINTO CARLOS FERRAS, P.E. #49454
DESIGN DIVISION HEAD
WASTEWATER DEPARTMENT

TIMOTHY THOMAS, P.E. #47079

No.	DATE	REVISIONS
3		
2		
1		

DES: MS
DRN: JHJ
CKD:
DATE: 8/1/19

CITY of TAMPA
WASTEWATER DEPARTMENT

HFCAWTP JUNCTION CHAMBER 2
SLUICE GATE REPLACEMENT
COVER SHEET

SHEET 1

User: ss13 Drawing Name: K:\WasteWater Projects\HFC ATWP Junction Chamber No.2 Sluice Gate Replacement\Drafting\DWG\HFCAWTP Junction Chamber 2 Sluice Gate Replacement 18-C-000024.dwg
Layout- Aug 01, 2019 - 10:09am CTB - MONOCHROME.CTB

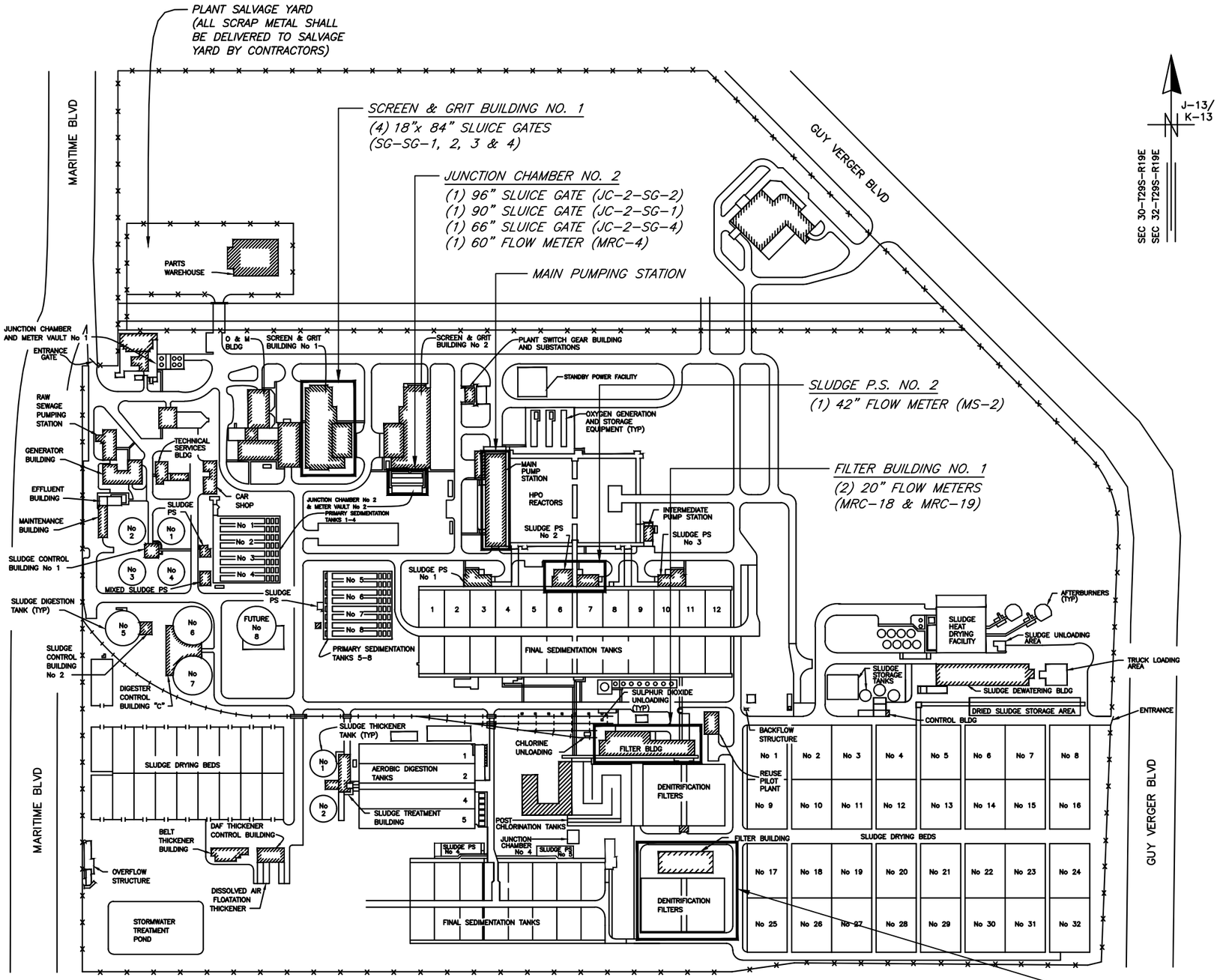

PROJECT LOCATIONS

INDEX

SHEET	DESCRIPTION
1	COVER SHEET
2	PROJECT MAP & INDEX
3	AERIAL VIEW/GENERAL NOTES
4	JUNCTION CHAMBER NO. 2 & MAIN PUMPING STATION AERIAL VIEW
5	JUNCTION CHAMBER NO. 2 PLAN VIEW
6	JUNCTION CHAMBER NO. 2 SECTION VIEWS
7	MAIN PUMPING STATION – STOP LOG LOCATION
8	MAIN PUMPING STATION – SECTION VIEW
9	SCREEN & GRIT BLDG. #1 – PLAN VIEW
10	SLUDGE PS #2 – DEMOLITION PLAN
10A	SLUDGE PS #2 – DEMOLITION PLAN VIEW
11	SLUDGE PS #2 – PROPOSED PLAN
11A	SLUDGE PS #2 – PROPOSED PLAN VIEW
12	DENITRIFICATION FILTERS (21–36) – DEMOLITION PLAN
12A	DEMOLITION SECTION VIEW DENITRIFICATION FILTERS (21–36)(16" FLOW METERS)
13	DENITRIFICATION FILTERS (21–36) – PROPOSED PLAN
13A	PROPOSED SECTION VIEW DENITRIFICATION FILTERS (21–36)(16" FLOW METERS)
14	FILTER BLDG. #1 – DEMOLITION PLAN
14A	FILTER BLDG. #1 – DEMOLITION PLAN
15	FILTER BLDG. #1 – PROPOSED PLAN
15A	FILTER BLDG. #1 – SECTION VIEW
16	EX. REMOVABLE SLAB SECTION TYPE B
17	GENERAL NOTES AND SCOPE OF WORK
18	SLUICE GATE REPLACEMENT OVERALL ELECTRICAL SITE PLAN
19	INDEX SCHEDULES AND GENERAL NOTES
20	SCREEN & GRIT BLDG NO. 2, JC NO. 2 AND METER VAULT NO. 2 SITE PLAN
21	JUNCTION CHAMBER NO. 2 AND METER VAULT NO. 2 SITE PLAN
22	SCREEN & GRIT BLDG NO. 2, ELECTRICAL ROOM PLAN AND DETAILS
23	JC–2–SG–1, JC–2–SG–2 AND JC–2–SG–4 CONTROL SCHEMATIC
24	SCREEN AND GRIT BLDG NO. 2, CONDUIT AND CABLE SCHEDULE
25	SCREEN & GRIT BUILDING NO. 1 PROPOSED ELECTRICAL PLAN ELEVATION 15'–6"
26	EXISTING MCC–28 ELEVATION AND DETAILS
27	SCREEN & GRIT BUILDING NO. 1 CONDUIT AND CABLE SCHEDULE
28	SLUDGE PUMP BUILDING NO. 2 PROPOSED ELECTRICAL PLAN ELEVATION 11'–0"
29	SLUDGE PUMP BUILDING NO. 2 REMOTE FLOW TRANSMITTER DETAILS
30	FILTER BUILDING NO. 2 PROPOSED ELECTRICAL PLAN 4'–0"
31	FILTER BUILDING NO. 2 PROPOSED ELECTRICAL PLAN ELEVATION 11'–0"
32	DENITRIFICATION FILTERS ELECTRICAL DETAILS
33	DENITRIFICATION FILTERS CONDUIT AND CABLE SCHEDULES
34	FILTER BUILDING NO. 1 PROPOSED ELECTGRICAL PLAN ELEVATION 3'–6"
35	EXISTING CONDITIONS PLAN ELEVATIONS 11'–0"
36	FILTER BUILDING NO. 1 PROPOSED ELECTRICAL PLAN ELEVATION 23'–6"
37	FILTER BUILDING NO. 1 ELECTRICAL DETAILS (SHEET 1 OF 2)
38	FILTER BUILDING NO. 1 ELECTRICAL DETAILS (SHEET 2 OF 2)
39	FILTER BUILDING NO. 1 CONDUIT AND CABLE SCHEDULE
40	TYPICAL FLOW METER REMOTE TRANSMITTER WIRING SCHEMATIC

JACINTO CARLOS FERRAS, P.E. #49454
DESIGN DIVISION HEAD
WASTEWATER DEPARTMENT

No.	DATE	REVISIONS
3		
2		
1		

DES: MS
DRN: JHJ
CKD:
DATE: 8/1/19

CITY of TAMPA
WASTEWATER DEPARTMENT

HFCAWTP JUNCTION CHAMBER 2
SLUICE GATE REPLACEMENT
PROJECT MAP & INDEX

SHEET
2

User: ss13 Drawing Name: K:\WasteWater Projects\HFC ATWP Junction Chamber No.2 Sluice Gate Replacement\Drafting\DWG\HFCAWTP Junction Chamber 2 Sluice Gate Replacement 18-C-000024.dwg
Layout - SHT 2, Sep 23, 2019 - 9:56am

GENERAL NOTES:

G–1 ALL WORK ASSOCIATED WITH REPLACING THE SLUICE GATES AT JUNCTION CHAMBER #2 & MRC–4 FLOW METER MUST BE DONE DURING THE DRY SEASON (DECEMBER THRU MAY). WE WILL ALSO REQUIRE THE REPLACEMENT OF THE SLUICE GATES IN SCREEN & GRIT BUILDING #1 TO BE DONE IN THE DRY SEASON.

G–2 REPLACING THE 96", 90", & 66" SLUICE GATE REQUIRES TAKING PRIMARY SEDIMENTATION TANKS 1–8 (ALL TANKS) OUT OF SERVICE. ONLY ONE SET OF PRIMARY SEDIMENTATION TANKS TO BE OUT OF SERVICE AT A TIME. CONTRACTOR SHALL PERFORM THE WORK AS PLANT OPERATIONS ALLOW. CONTRACTOR SHALL PROVIDE THE CITY WITH A MINIMUM ONE WEEK ADVANCE NOTICE OF WORK. WORK SHALL NOT COMMENCE UNTIL ALL EQUIPMENT IS LOCATED ON–SITE.

G–3 CONTRACTOR SHALL COORDINATE ALL CONSTRUCTION ACTIVITIES WITH WASTEWATER PERSONNEL AND PUMPING STATION OPERATIONS.

G–4 CONTRACTOR SHALL INSTALL TWO CITY SUPPLIED STEEL STOP LOGS TO ISOLATE FLOW, AS SHOWN ON SHEET 4. STOP LOGS ARE REQUIRED TO TO INSTALL THE SLUICE GATES.

STOP LOG NOTES:

SL–1 CONTRACTOR SHALL INSTALL THREE (3), 18'x6'–6", 304 S/S STOP LOGS AT JUNCTION CHAMBER #2 & MAIN PUMPING STATION TO ISOLATE EFFLUENT CONDUITS, AS REQUIRED. THE CITY OF TAMPA SHALL PROVIDE STOP LOGS. THE CONTRACTOR SHALL BE RESPONSIBLE FOR SAFELY TRANSPORTING STOP LOGS FROM THE AWTP HOUSING WAREHOUSE TO JUNCTION CHAMBER #2.

SL–2 FASTEN RUBBER MATERIAL TO WETTED PERIMETER OF STOP LOGS, PRIOR TO INSTALLATION, TO PREVENT LEAKAGE AROUND STOP LOGS ONCE INSTALLED.

SL–3 AFTER STOP LOGS ARE INSTALLED, CONTRACTOR SHALL DEWATER WET WELL/CHAMBER WITH ANY PUMPS AND PIPING NECESSARY TO DISCHARGE INTO ACTIVE WET WELL. PUMPS SHALL BE PROPERLY SIZED TO HANDLE ANY LEAKAGE FROM STOP LOG. DEWATERING PUMP MAY BE REQUIRED FOR ENTIRE DURATION TO FACILITATE WORK REQUIRED IN THIS CONTRACT.

SL–4 CONTRACTOR SHALL MINIMIZE ANY STOP LOG LEAKAGE AS NECESSARY TO FACILITATE THE WORK REQUIRED IN THIS CONTRACT. LEAKAGE MAY BE REDUCED BY INSTALLING VISQUEEN ROLLS BEHIND (WATER SIDE) OF STOP LOGS, OR INJECT OAKUM OR A CHEMICAL GROUT. ALL ITEMS USED SHALL BE CONTAINED, REMOVED AND PROPERLY DISCARDED OF AFTER WORK HAS COMPLETED.

SL–5 AT THE COMPLETION OF THIS PROJECT THE STOP LOGS SHALL BE RETURNED TO THE AWTP HOUSING WAREHOUSE. CONTRACTOR WILL BE RESPONSIBLE FOR REPAIRING OR REPLACING ANY STOP LOGS AND NECESSARY HARDWARE THAT MAY BE DAMAGED DURING CONSTRUCTION TO PRE–CONSTRUCTION CONDITION OR BETTER.

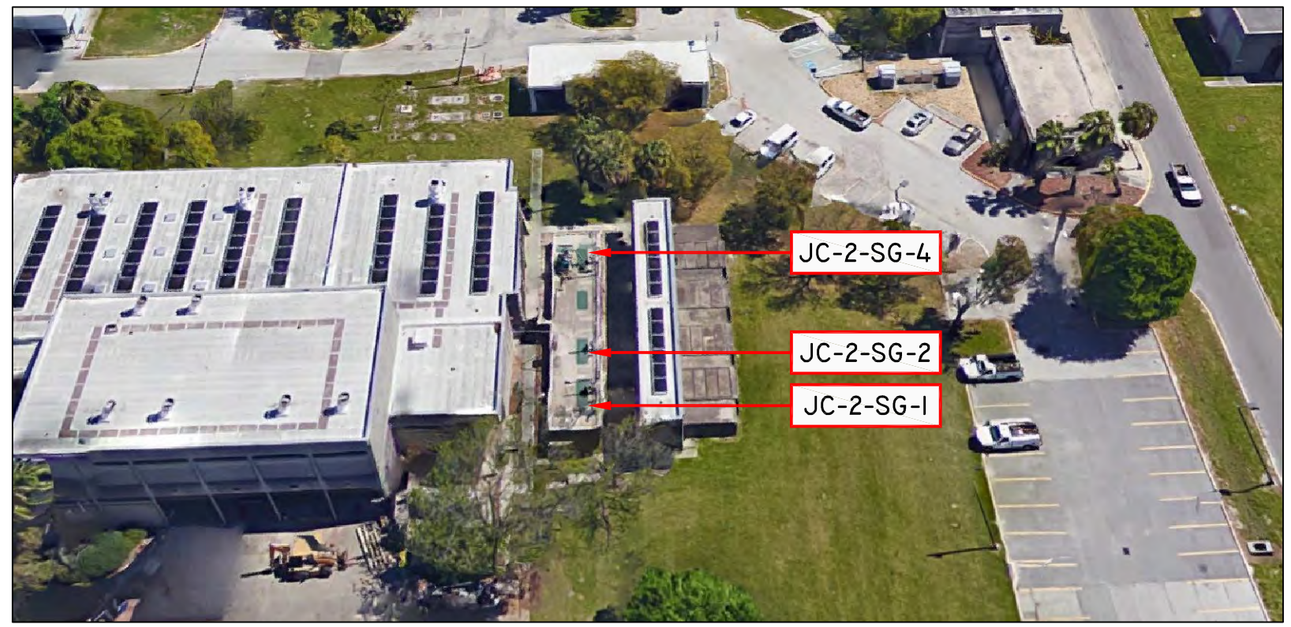

	No.	DATE	REVISIONS				
JACINTO CARLOS FERRAS, P.E. #49454 DESIGN DIVISION HEAD WASTEWATER DEPARTMENT	3			DES: MS DRN: JHJ CKD: DATE: 8/1/19	CITY of TAMPA WASTEWATER DEPARTMENT	HFCAWTP JUNCTION CHAMBER 2 SLUICE GATE REPLACEMENT GENERAL NOTES / AERIAL VIEW	SHEET 3
	2						
	1						

User: ss13 Drawing Name: K:\WasteWater Projects\HFC ATWP Junction Chamber No.2 Sluice Gate Replacement\Drafting\DWG\HFCAWTP Junction Chamber 2 Sluice Gate Replacement 18-C-000024.dwg
Layout – SHT 3, Aug 01, 2019 – 11:21am

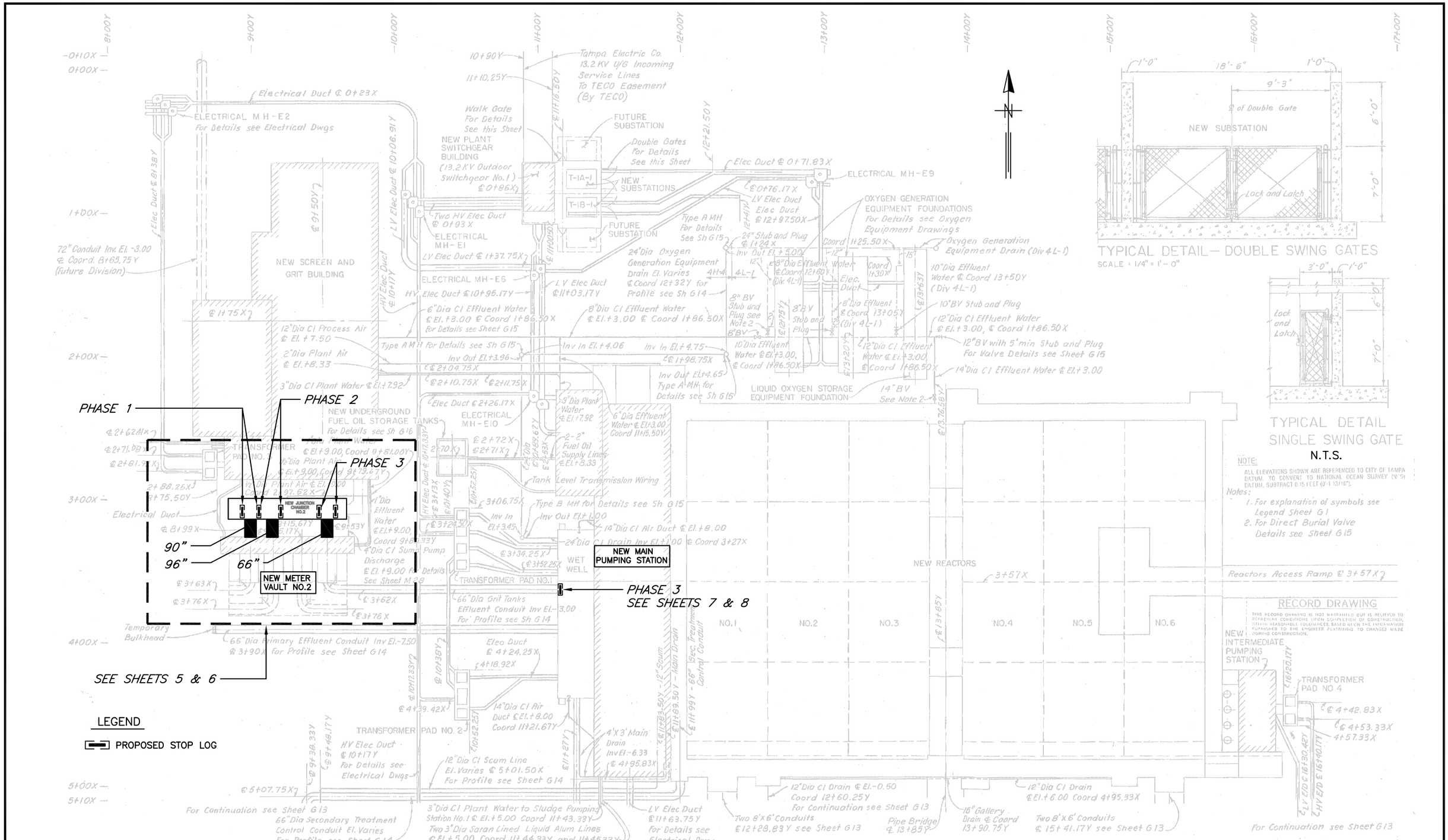

PLAN VIEW - JUNCTION CHAMBER NO. 2 (96", 90", 66" SLUICE GATES & 60" FLOW METER)

	No.	DATE	REVISIONS				
JACINTO CARLOS FERRAS, P.E. #49454 DESIGN DIVISION HEAD WASTEWATER DEPARTMENT	3			DES: MS DRN: JHJ CKD: DATE: 8/1/19	CITY of TAMPA WASTEWATER DEPARTMENT	HFCAWTP JUNCTION CHAMBER 2 SLUICE GATE REPLACEMENT JUNCTION CHAMBER NO. 2 & MAIN PUMPING STATION AERIAL VIEW	SHEET 4
	2						
	1						

User: ss13 Drawing Name: K:\WasteWater Projects\HFC ATWP Junction Chamber No.2 Sluice Gate Replacement 18-C-000024.dwg
Layout– Aug 01, 2019 – 1:55pm

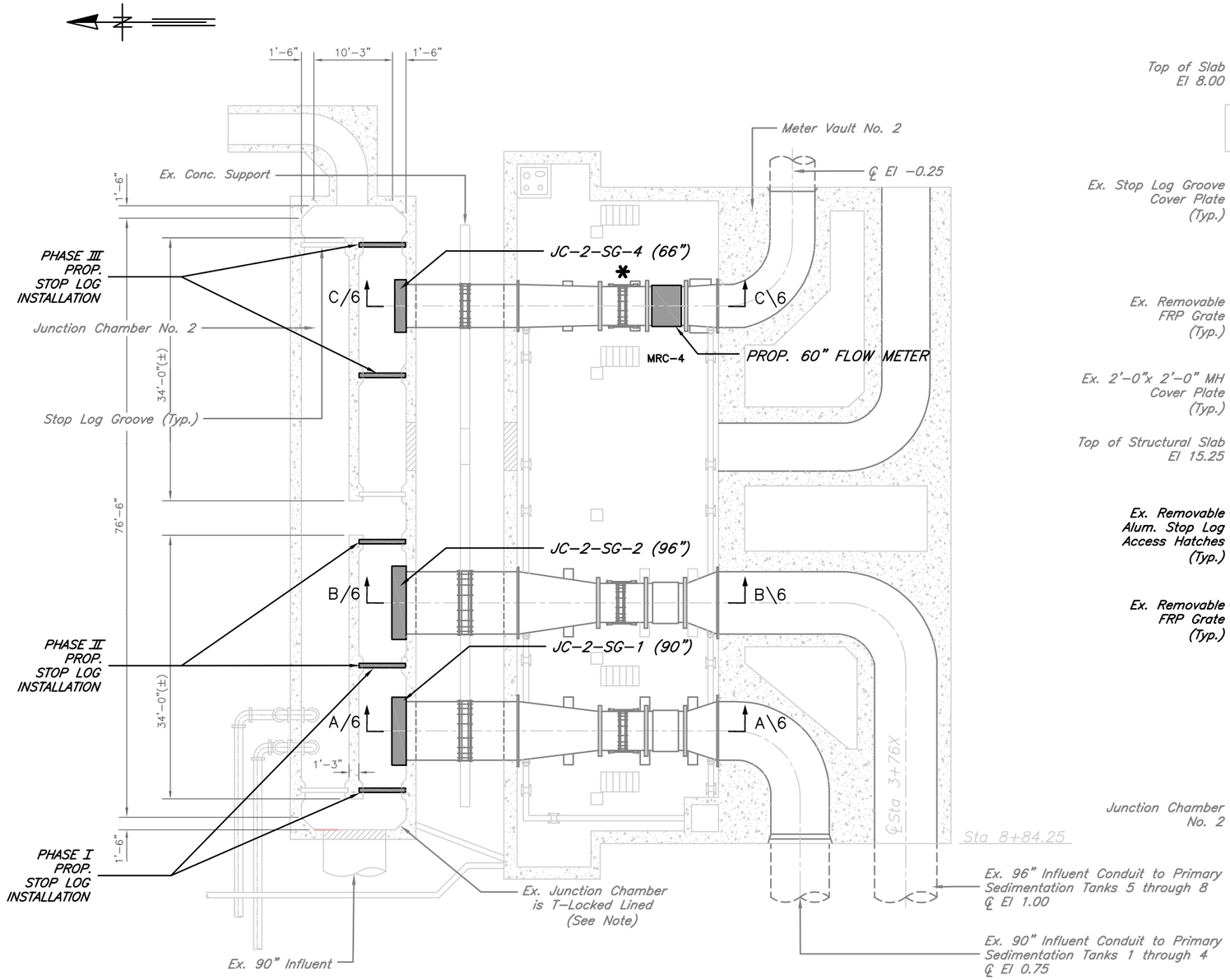

SECTION PLAN VIEW AT EL 19.00
SCALE: 1/16"=1-0'

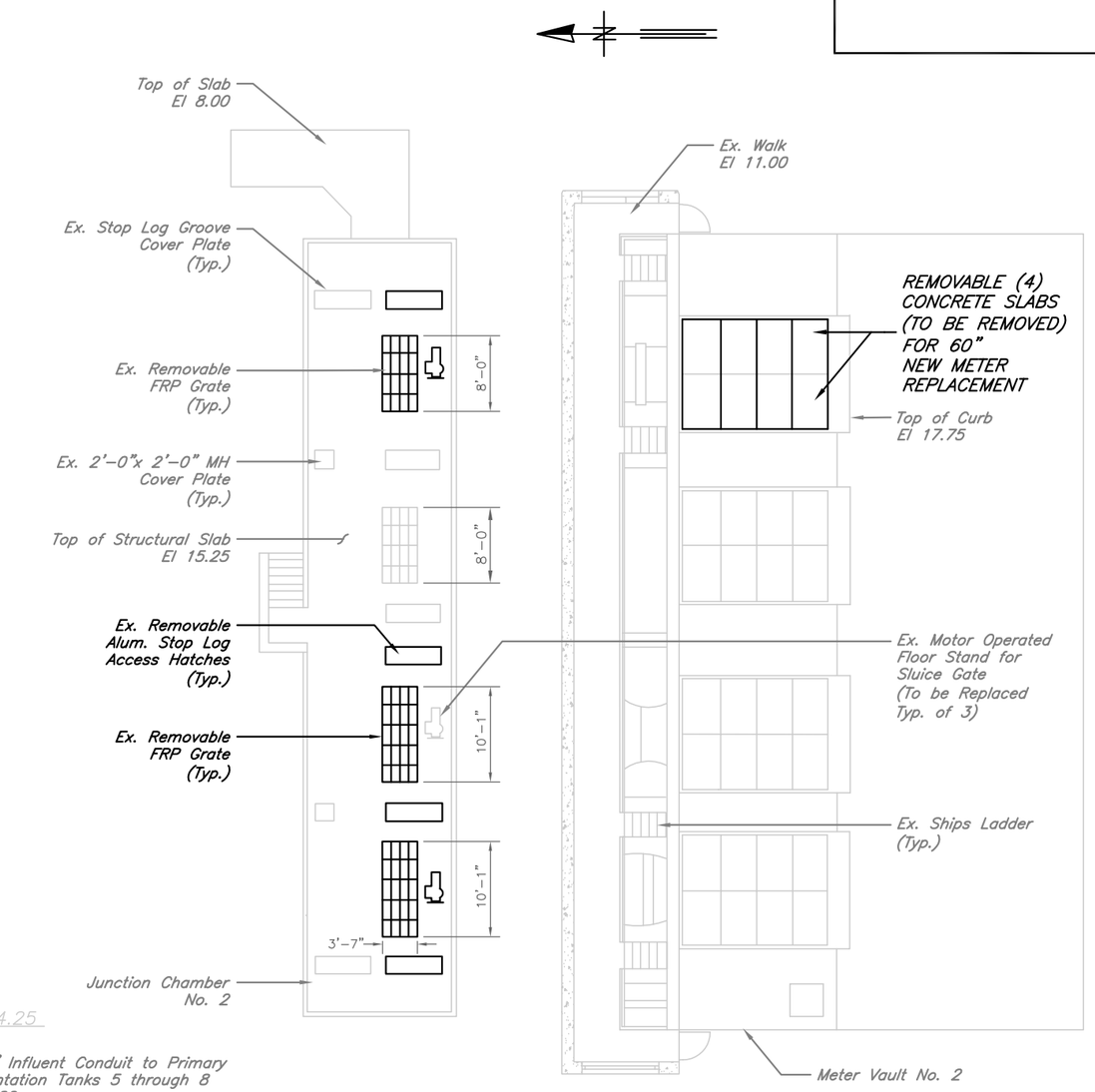

SECTION PLAN VIEW AT EL 20.00
SCALE: 1/16"=1-0'

NOTES:

1) CONTRACTOR SHALL INSTALL (2) STOP LOGS AT JC2 TO ISOLATE THE FLOW FOR EACH SLUICE GATE REPLACEMENT. ONLY ONE SET OF PRIMARY SEDIMENTATION TANKS TO BE OUT OF SERVICE AT A TIME.

2) IN ADDITION TO STOPLOGS AT JC2, THE CONTRACTOR SHALL INSTALL (1) STOP LOG AT MAIN PUMP STATION TO ISOLATE MCR-4

LEGEND

- PROPOSED SLUICE GATE/FLOW METER
- PROPOSED STOP LOG
- * REPLACE GASKET ON EXISTING HARDNESS COUPLING. (TYP)

	No.	DATE	REVISIONS			
JACINTO CARLOS FERRAS, P.E. #49454 DESIGN DIVISION HEAD WASTEWATER DEPARTMENT	3			DES: MS DRN: JHJ CKD: DATE: 8/1/19	CITY of TAMPA WASTEWATER DEPARTMENT	HFCAWTP JUNCTION CHAMBER 2 SLUICE GATE REPLACEMENT JUNCTION CHAMBER NO. 2 PLAN VIEW	SHEET 5
	2						
	1						

User: ss13 Drawing Name: K:\WasteWater Projects\HFC ATWP Junction Chamber No.2 Sluice Gate Replacement 18-C-000024.dwg
Layout- Aug 01, 2019 - 3:13pm
Gate Replacement\Drafting\DWG\HFCAWTP Junction Chamber 2 Sluice

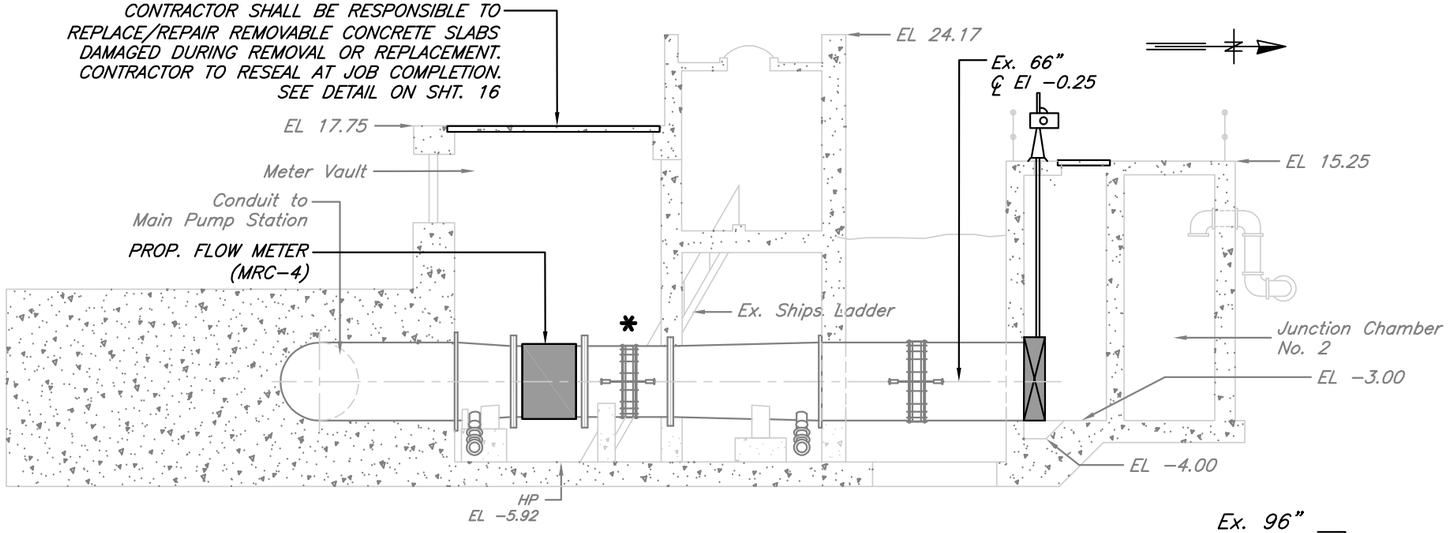

SECTION C/5 JC−2−SG−4 (66" PIPE) & MRC−4

SCALE: 3/32"=1−0'

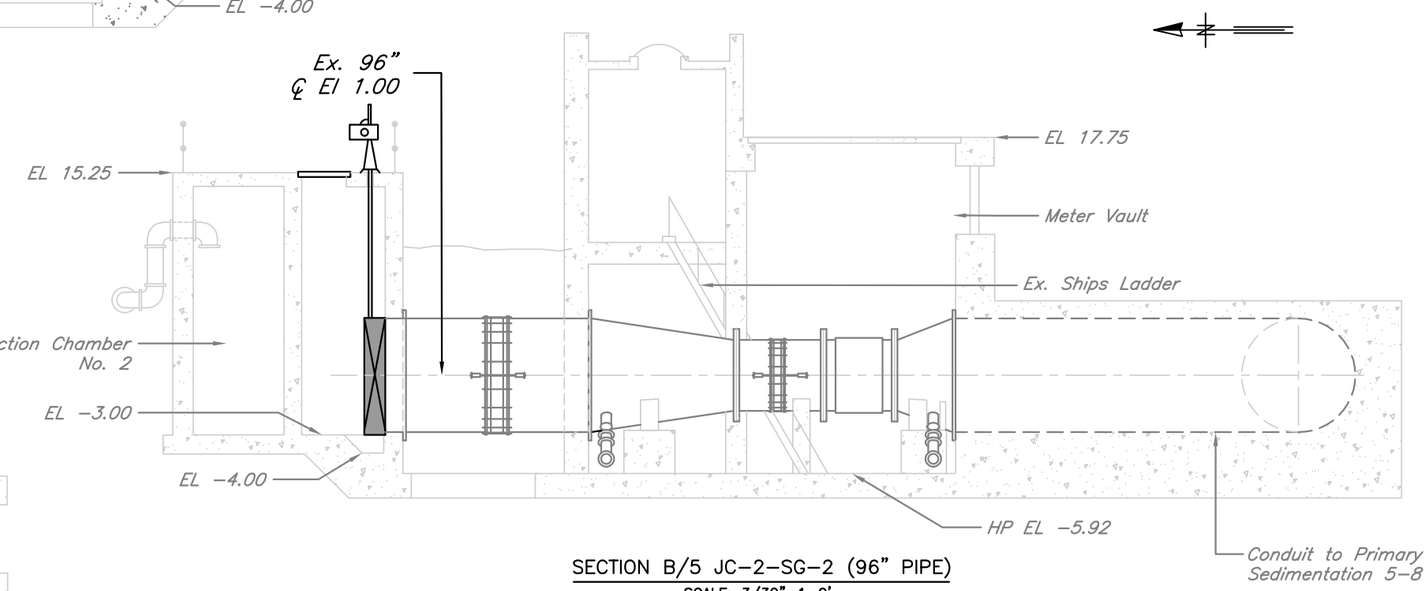

SECTION B/5 JC−2−SG−2 (96" PIPE)

SCALE: 3/32"=1−0'

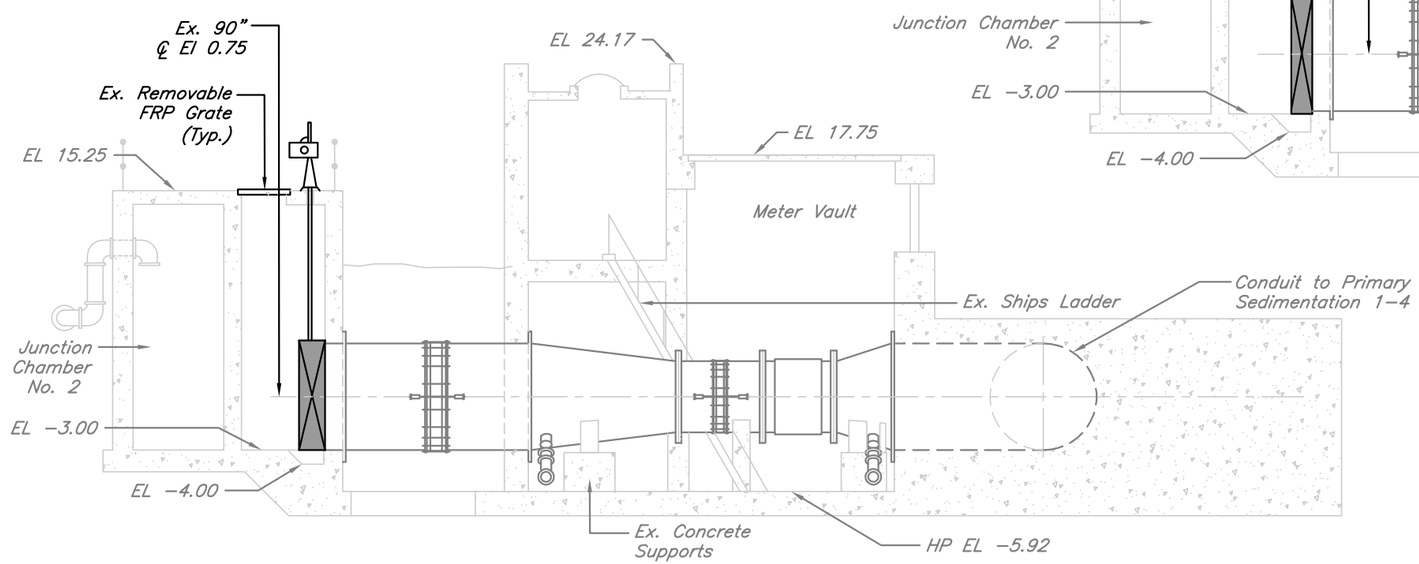

SECTION A/5 JC−2−SG−1 (90" PIPE)

SCALE: 3/32"=1−0'

LEGEND

- PROPOSED SLUICE GATE/FLOW METER
- PROPOSED STOP LOG
- * REPLACE GASKET ON EXISTING HARDNESS COUPLING. (TYP)

	No.	DATE	REVISIONS			
JACINTO CARLOS FERRAS, PE #49454 DESIGN DIVISION HEAD WASTEWATER DEPARTMENT	3			DES: MS DRN: JHJ CKD: DATE: 8/1/19	CITY of TAMPA WASTEWATER DEPARTMENT	HFCAWTP JUNCTION CHAMBER 2 SLUICE GATE REPLACEMENT JUNCTION CHAMBER NO. 2 SECTION VIEWS
	2					
	1					

SHEET 6

User: ss13 Drawing Name: K:\WasteWater Projects\HFC ATWP Junction Chamber No.2 Sluice Gate Replacement\Drafting\DWG\HFCAWTP Junction Chamber 2 Sluice Gate Replacement 18−C−000024.dwg
Layout− Aug 01, 2019 − 3:13pm

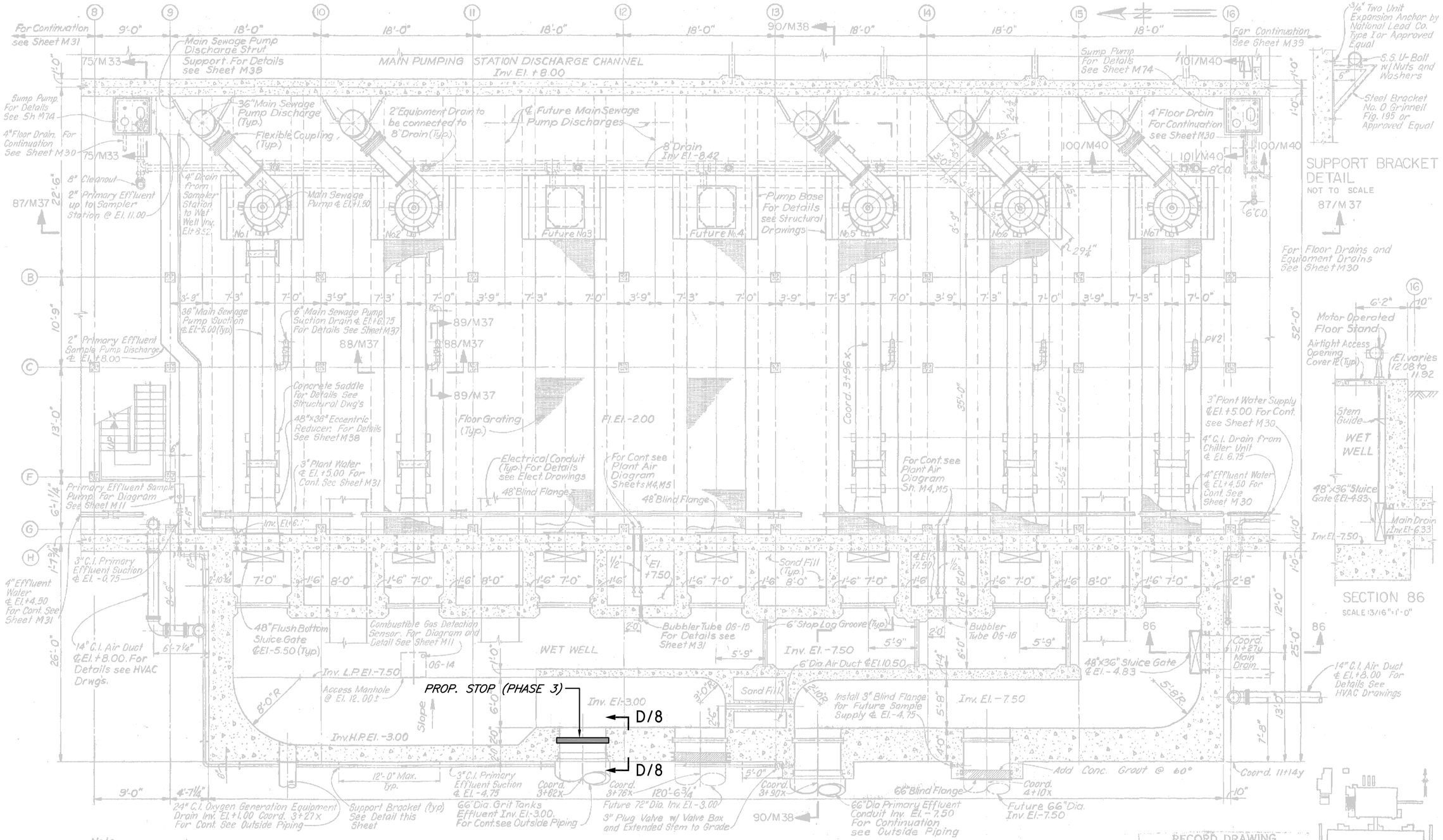

Note:
*-Indicates Dimensions or Elevations to be determined after Selection of Equipment

NOTE:
ALL ELEVATIONS SHOWN ARE REFERENCED TO CITY OF TAMPA DATUM. TO CONVERT TO NATIONAL OCEAN SURVEY (N.S.) DATUM, SUBTRACT 0.15 FEET (0'-1 13/16").

RECORD DRAWING
THIS RECORD DRAWING IS NOT WARRANTED BUT IS BELIEVED TO REPRESENT CONDITIONS UPON COMPLETION OF CONSTRUCTION, WITHIN REASONABLE TOLERANCES, BASED UPON THE INFORMATION FURNISHED TO THE ENGINEER PERTAINING TO CHANGES MADE DURING CONSTRUCTION.

STOP LOG PHASE 3 SECTIONAL PART PLAN
MAIN PUMPING STATION

N.T.S.

NOTE: THIS SHEET IS A COPY OF THE AS-BUILT DRAWING (NO PROPOSED INFORMATION IS SHOWN)

	No.	DATE	REVISIONS				
JACINTO CARLOS FERRAS, PE #49454 DESIGN DIVISION HEAD WASTEWATER DEPARTMENT	3			DES: MS DRN: JHJ CKD: DATE: 8/1/19	CITY of TAMPA WASTEWATER DEPARTMENT	HFCAWTP JUNCTION CHAMBER 2 SLUICE GATE REPLACEMENT MAIN PUMPING STATION - STOP LOG LOCATION	SHEET 7
	2						
	1						

User: ss13 Drawing Name: K:\WasteWater Projects\HFC ATWP Junction Chamber No.2 Sluice Gate Replacement\Drafting\DWG\HFCAWTP Junction Chamber 2 Sluice Gate Replacement 18-C-000024.dwg
Layout- Aug 01, 2019 - 3:13pm

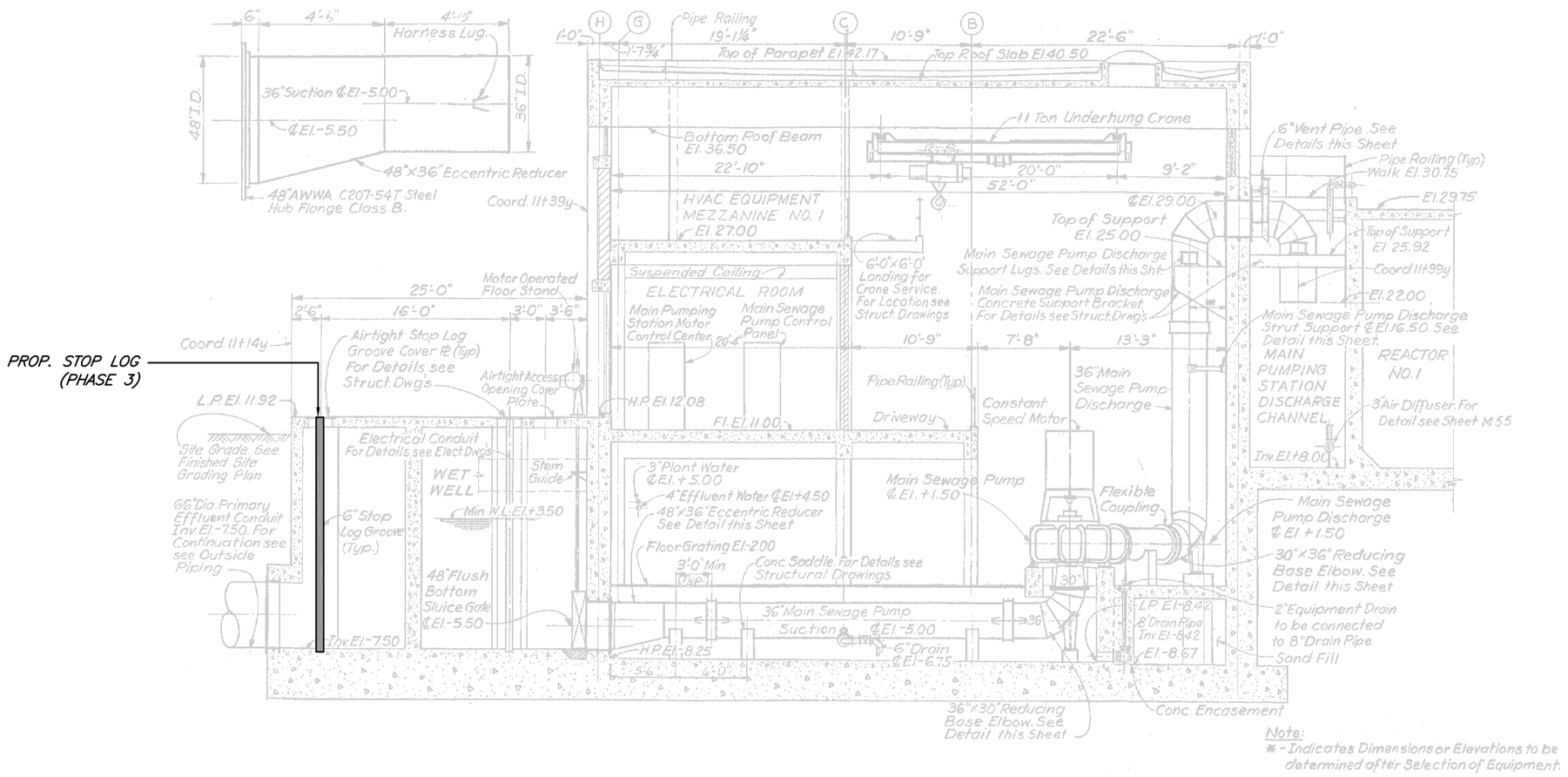

SECTION D/7 PHASE 3 STOP LOG

N.T.S.

	No.	DATE	REVISIONS				
JACINTO CARLOS FERRAS, PE #49454 DESIGN DIVISION HEAD WASTEWATER DEPARTMENT	3			DES: MS DRN: JHJ CKD: DATE: 8/1/19	CITY of TAMPA WASTEWATER DEPARTMENT	HFCAWTP JUNCTION CHAMBER 2 SLUICE GATE REPLACEMENT MAIN PUMPING STATION - SECTION VIEW	SHEET 8
	2						
	1						

User: ss13 Drawing Name: K:\WasteWater Projects\HFC ATWP Junction Chamber No.2 Sluice Gate Replacement\Drafting\DWG\HFCAWTP Junction Chamber 2 Sluice Gate Replacement 18-C-000024.dwg
Layout- Aug 01, 2019 - 3:13pm

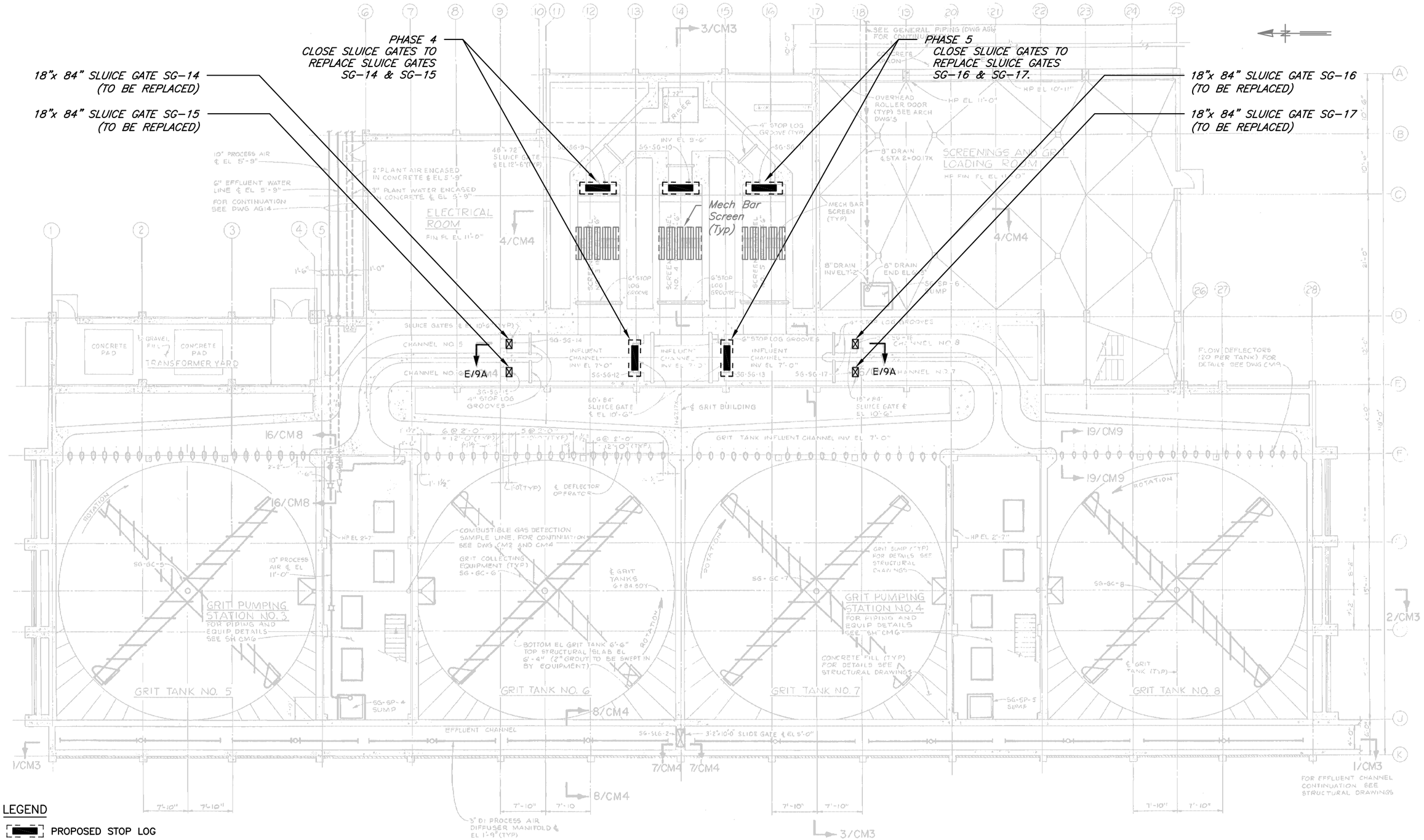

PLAN VIEW - SCREEN & GRIT BUILDING #1 (4 - 18" x 84" SLUICE GATES)

SCALE: 1/16" = 1'-0"

	No.	DATE	REVISIONS				
JACINTO CARLOS FERRAS, PE #49454 DESIGN DIVISION HEAD WASTEWATER DEPARTMENT	3			DES: MS DRN: JHJ CKD: DATE: 8/2/19	CITY of TAMPA WASTEWATER DEPARTMENT	HFCAWTP JUNCTION CHAMBER 2 SLUICE GATE REPLACEMENT SCREEN & GRIT BLDG. #1 - PLAN VIEW	SHEET 9
	2						
	1						

User: ss13 Drawing Name: K:\WasteWater Projects\HFC ATWP Junction Chamber No.2 Sluice Gate Replacement\Drafting\DWG\HFCAWTP Junction Chamber 2 Sluice Gate Replacement 18-C-000024.dwg
Layout- Aug 01, 2019 - 4:19pm

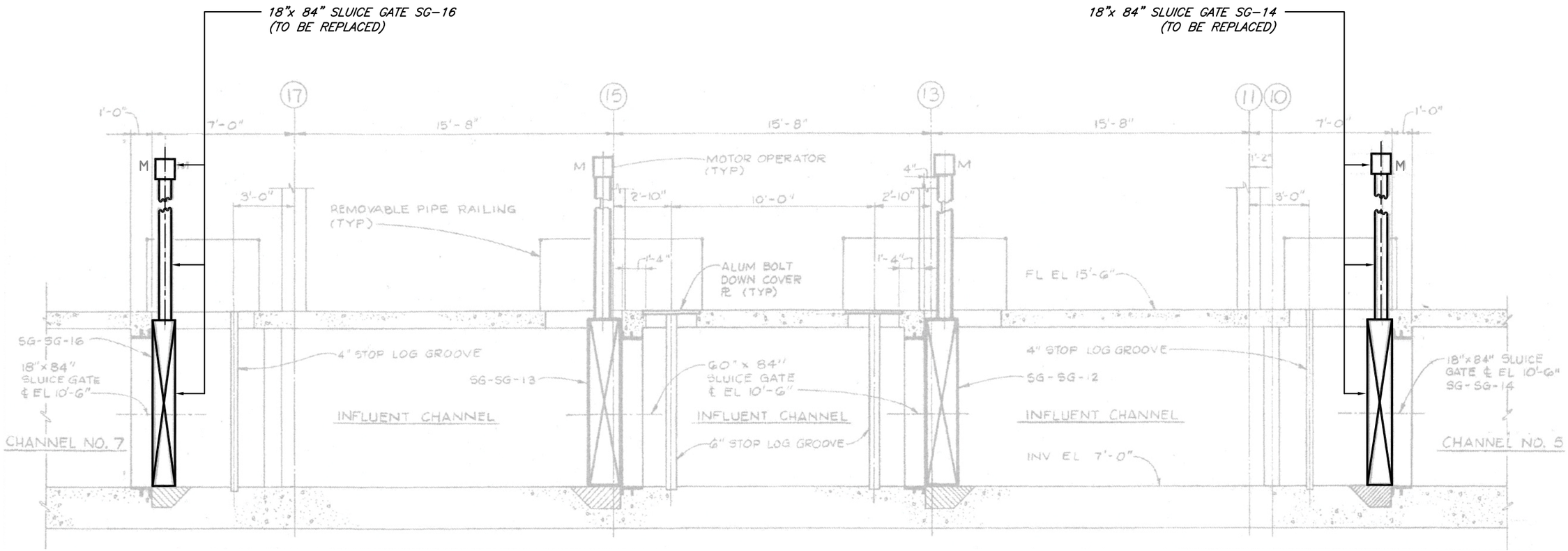

SECTION E/9

SECTION VIEW - SCREEN & GRIT BUILDING #1 (4 - 18" x 84" SLUICE GATES)

SCALE: 3/32" = 1'-0"

	No.	DATE	REVISIONS				
JACINTO CARLOS FERRAS, PE #49454 DESIGN DIVISION HEAD WASTEWATER DEPARTMENT	3			DES: MS DRN: JHJ CKD: DATE: 8/2/19	CITY of TAMPA WASTEWATER DEPARTMENT	HFCAWTP JUNCTION CHAMBER 2 SLUICE GATE REPLACEMENT SCREEN & GRIT BLDG. #1 - SECTION VIEW	SHEET 9A
	2						
	1						

User: ss13 Drawing Name: K:\WasteWater Projects\HFC ATWP Junction Chamber No.2 Sluice Gate Replacement\Drafting\DWG\HFCAWTP Junction Chamber 2 Sluice Gate Replacement 18-C-000024.dwg
Layout- Aug 01, 2019 - 4:19pm

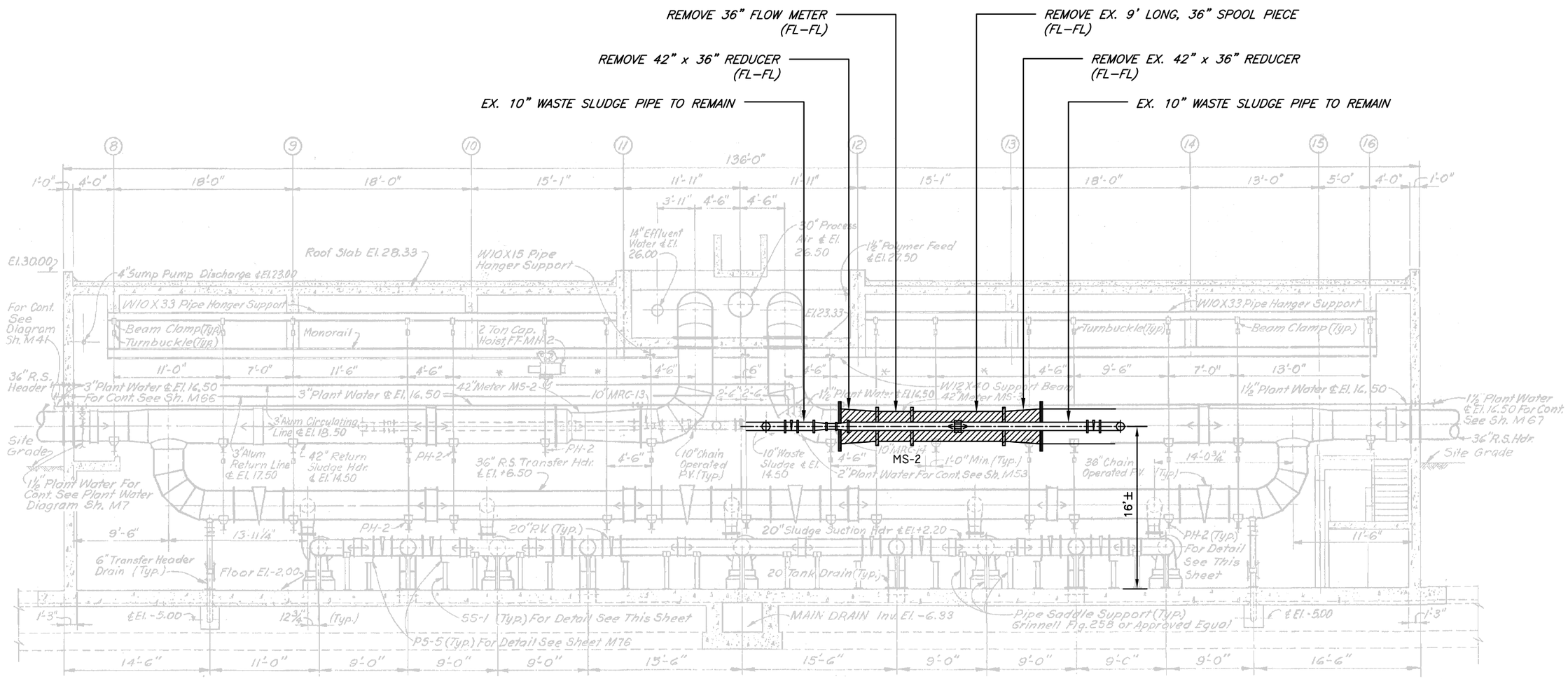

DEMOLITION - SECTION VIEW - SLUDGE PS No. 2 (42" FLOW METER)

SCALE: 3/32" = 1'-0"

SHADED AREAS ON THIS SHEET INDICATE PIPING AND EQUIPMENT TO BE REMOVED

GENERAL NOTE:

THE USE OF THE EXISTING OVERHEAD CRANE IN BUILDING IS ALLOWED FOR THE REMOVAL AND INSTALLATION OF THE FLOW METER. THE CRANE MUST BE OPERATED BY A CITY EMPLOYEE AND AT LEAST (1) WEEK NOTICE SHALL BE GIVEN TO THE CITY.

JACINTO CARLOS FERRAS, PE #49454
DESIGN DIVISION HEAD
WASTEWATER DEPARTMENT

No.	DATE	REVISIONS
3		
2		
1		

DES: MS
DRN: JHJ
CKD:
DATE: 8/2/19

CITY of TAMPA
WASTEWATER DEPARTMENT

HFCAWTP JUNCTION CHAMBER 2
SLUICE GATE REPLACEMENT
SLUDGE PS #2 - DEMOLITION PLAN

SHEET 10

User: ss13 Drawing Name: K:\WasteWater Projects\HFC ATWP Junction Chamber No.2 Sluice Gate Replacement\Drafting\DWG\HFCAWTP Junction Chamber 2 Sluice Gate Replacement 18-C-000024.dwg
Layout- Aug 01, 2019 - 4:19pm

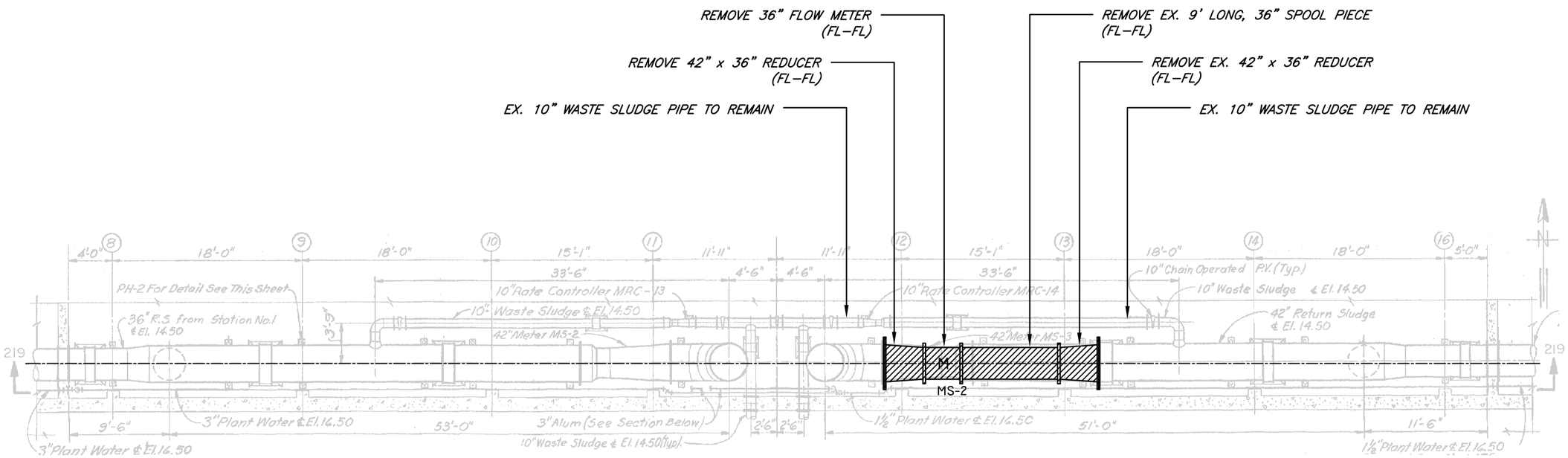

DEMOLITION - PLAN VIEW - SLUDGE PS No. 2 (42" FLOW METER)

SCALE: 3/32" = 1'-0"

SHADED AREAS ON THIS SHEET INDICATE PIPING AND EQUIPMENT TO BE REMOVED

JACINTO CARLOS FERRAS, PE #49454 DESIGN DIVISION HEAD WASTEWATER DEPARTMENT	No.	DATE	REVISIONS	DES: MS DRN: JHJ CKD: DATE: 8/2/19	CITY of TAMPA WASTEWATER DEPARTMENT	HFCAWTP JUNCTION CHAMBER 2 SLUICE GATE REPLACEMENT SLUDGE PS #2 - DEMOLITION PLAN VIEW	SHEET 10A
	3						
	2						
	1						

User: ss13 Drawing Name: K:\WasteWater Projects\HFC ATWP Junction Chamber No.2 Sluice Gate Replacement\Drafting\DWG\HFCAWTP Junction Chamber 2 Sluice Gate Replacement 18-C-000024.dwg
Layout- Aug 01, 2019 - 4:19pm

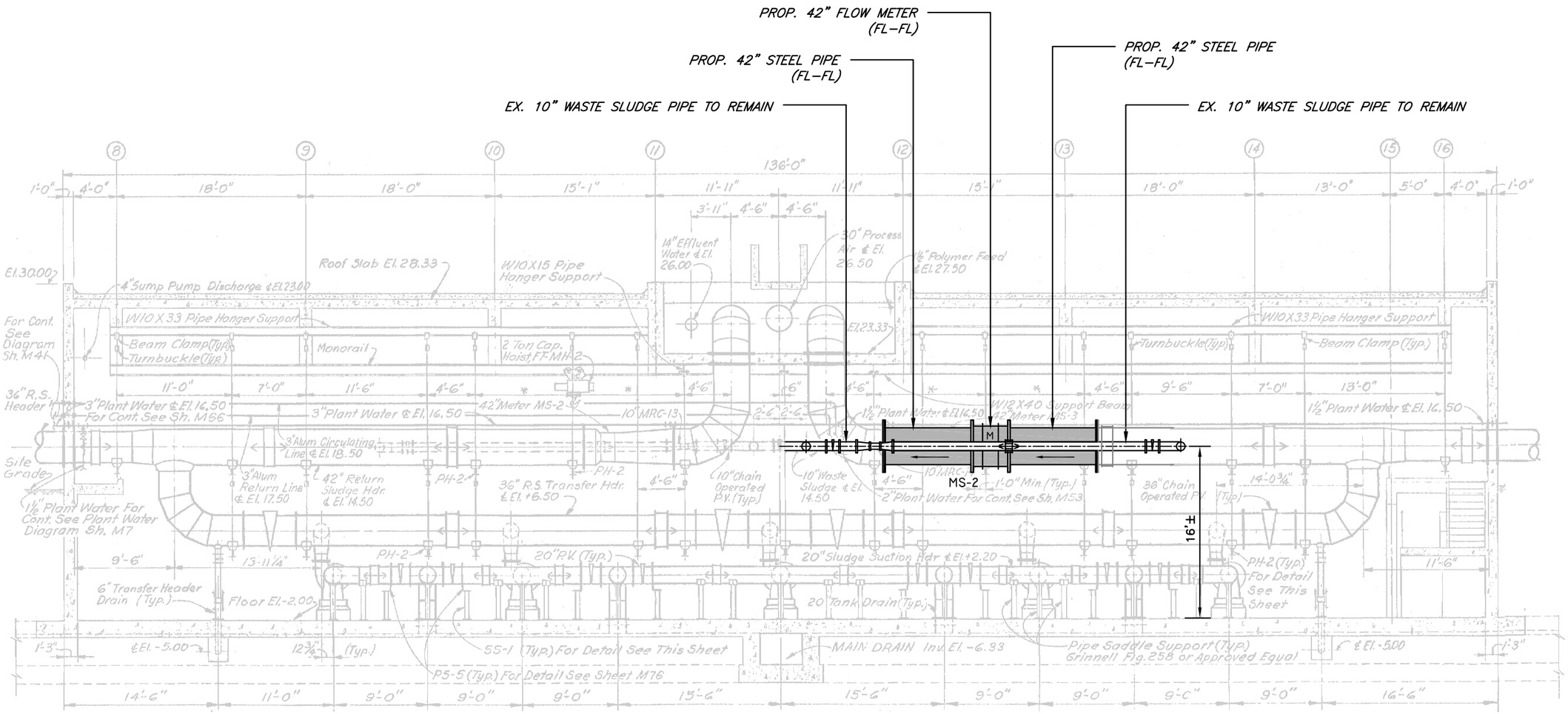

NOTES:

1. UPSTREAM / DOWNSTREAM LENGTHS PER MANUFACTURES RECOMMEDATIONS.

MIN. 7' DOWN STREAM LENGTH FROM FITTINGS/VALVES

MIN. 17.5' UP STREAM LENGTH FROM FITTINGS/VALVES

SEE NOTE 1

SHADED AREAS ON THIS SHEET INDICATE PIPING AND EQUIPMENT TO BE INSTALLED

PROPOSED - SECTION VIEW - SLUDGE PS No. 2 (42" FLOW METER)

SCALE: 3/32" = 1'-0"

GENERAL NOTE:

THE USE OF THE EXISTING OVERHEAD CRANE IN BUILDING IS ALLOWED FOR THE REMOVAL AND INSTALLATION OF THE FLOW METER. THE CRANE MUST BE OPERATED BY A CITY EMPLOYEE AND AT LEAST (1) WEEK NOTICE SHALL BE GIVEN TO THE CITY.

JACINTO CARLOS FERRAS, PE #49454
DESIGN DIVISION HEAD
WASTEWATER DEPARTMENT

No.	DATE	REVISIONS
3		
2		
1		

DES: MS
DRN: JHJ
CKD:
DATE: 8/2/19

CITY of TAMPA
WASTEWATER DEPARTMENT

HFCAWTP JUNCTION CHAMBER 2
SLUICE GATE REPLACEMENT
SLUDGE PS #2 - PROPOSED SECTION VIEW

SHEET 11

User: ss13 Drawing Name: K:\WasteWater Projects\HFC ATWP Junction Chamber No.2 Sluice Gate Replacement\Drafting\DWG\HFCAWTP Junction Chamber 2 Sluice Gate Replacement 18-C-000024.dwg
Layout- Aug 01, 2019 - 4:19pm

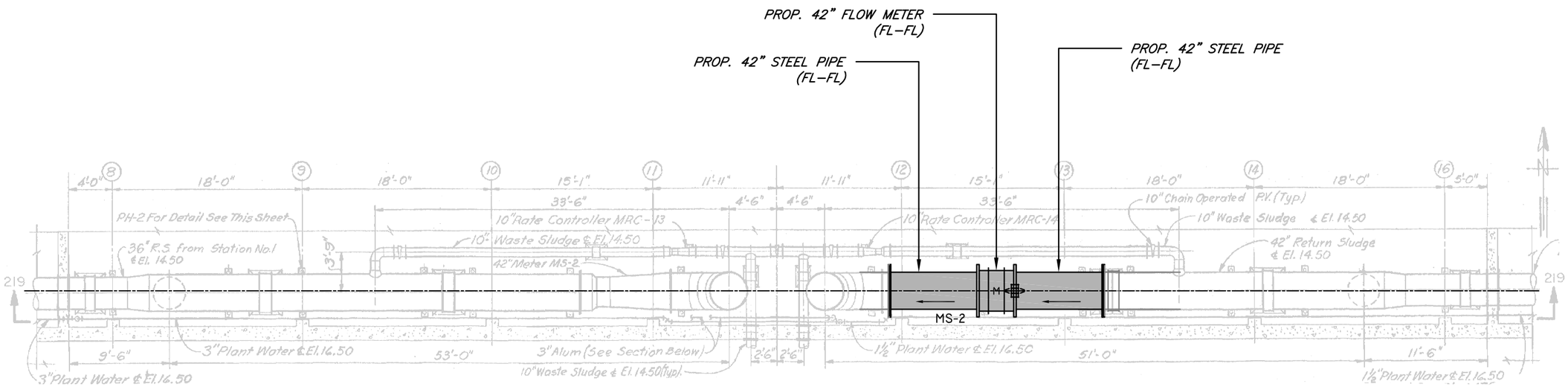

PROPOSED - PLAN VIEW - SLUDGE PS No. 2 (42" FLOW METER)

SCALE: 3/32" = 1'-0"

SHADED AREAS ON THIS SHEET INDICATE PIPING AND EQUIPMENT TO BE INSTALLED

JACINTO CARLOS FERRAS, PE #49454
DESIGN DIVISION HEAD
WASTEWATER DEPARTMENT

No.	DATE	REVISIONS
3		
2		
1		

DES: MS
DRN: JHJ
CKD:
DATE: 8/2/19

CITY of TAMPA
WASTEWATER DEPARTMENT

HFCAWTP JUNCTION CHAMBER 2
SLUICE GATE REPLACEMENT
SLUDGE PS #2 - PROPOSED PLAN VIEW

SHEET
IIA

User: ss13 Drawing Name: K:\WasteWater Projects\HFC ATWP Junction Chamber No.2 Sluice Gate Replacement\Drafting\DWG\HFCAWTP Junction Chamber 2 Sluice Gate Replacement 18-C-000024.dwg
Layout- Aug 01, 2019 - 4:19pm

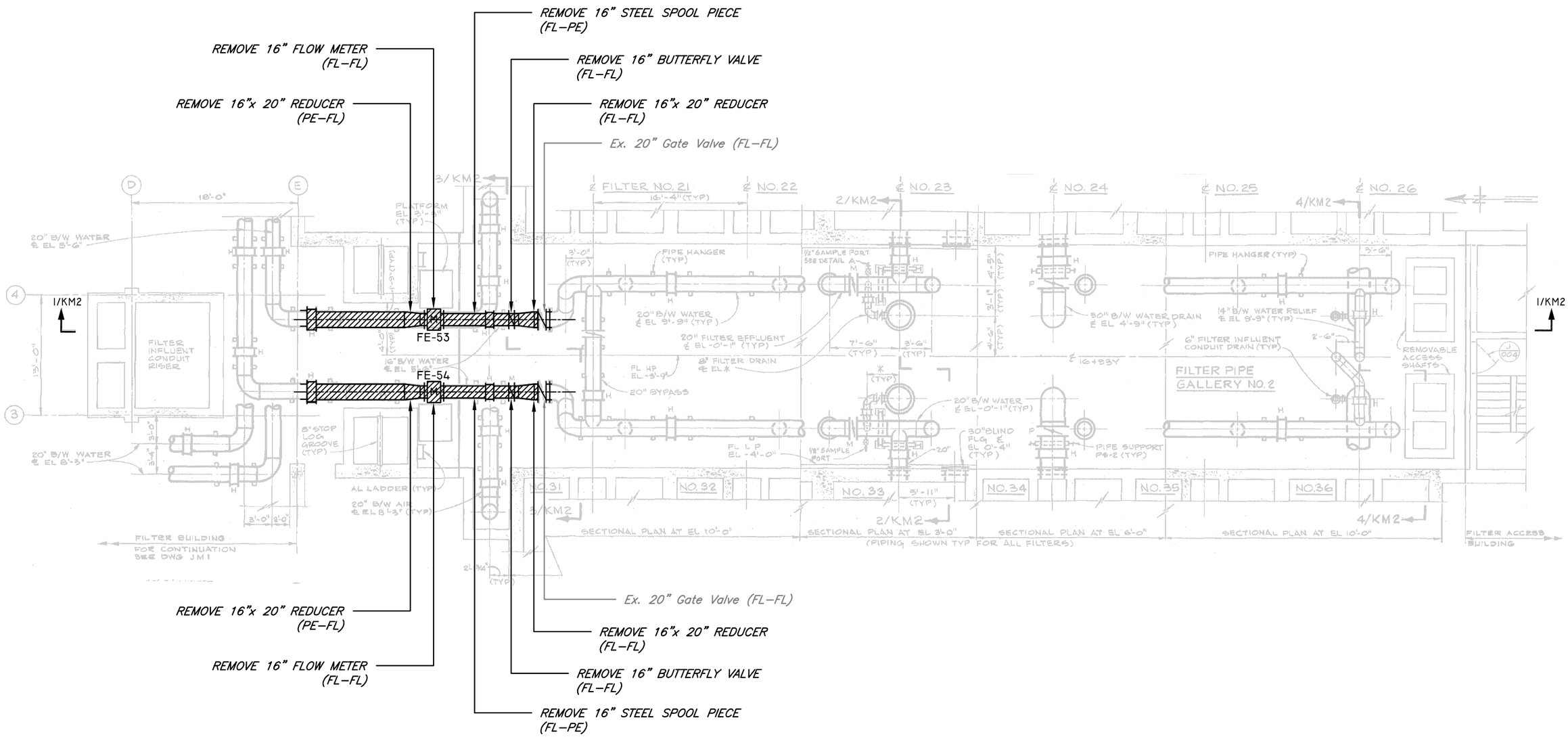

SHADED AREAS ON THIS SHEET INDICATE PIPING AND EQUIPMENT TO BE REMOVED

DEMOLITION - PLAN VIEW - DENITRIFICATION FILTERS (21 - 36)(16" FLOW METERS)

N.T.S.

	No.	DATE	REVISIONS			
JACINTO CARLOS FERRAS, PE #49454 DESIGN DIVISION HEAD WASTEWATER DEPARTMENT	3			DES: MS DRN: JHJ CKD: DATE: 8/2/19	CITY of TAMPA WASTEWATER DEPARTMENT	HFCAWTP JUNCTION CHAMBER 2 SLUICE GATE REPLACEMENT DENITRIFICATION FILTERS (21-36) - DEMOLITION PLAN
	2					SHEET 12
	1					

User: ss13 Drawing Name: K:\WasteWater Projects\HFC ATWP Junction Chamber No.2 Sluice Gate Replacement\Drafting\DWG\HFCAWTP Junction Chamber 2 Sluice Gate Replacement 18-C-000024.dwg
Layout- Aug 01, 2019 - 4:19pm

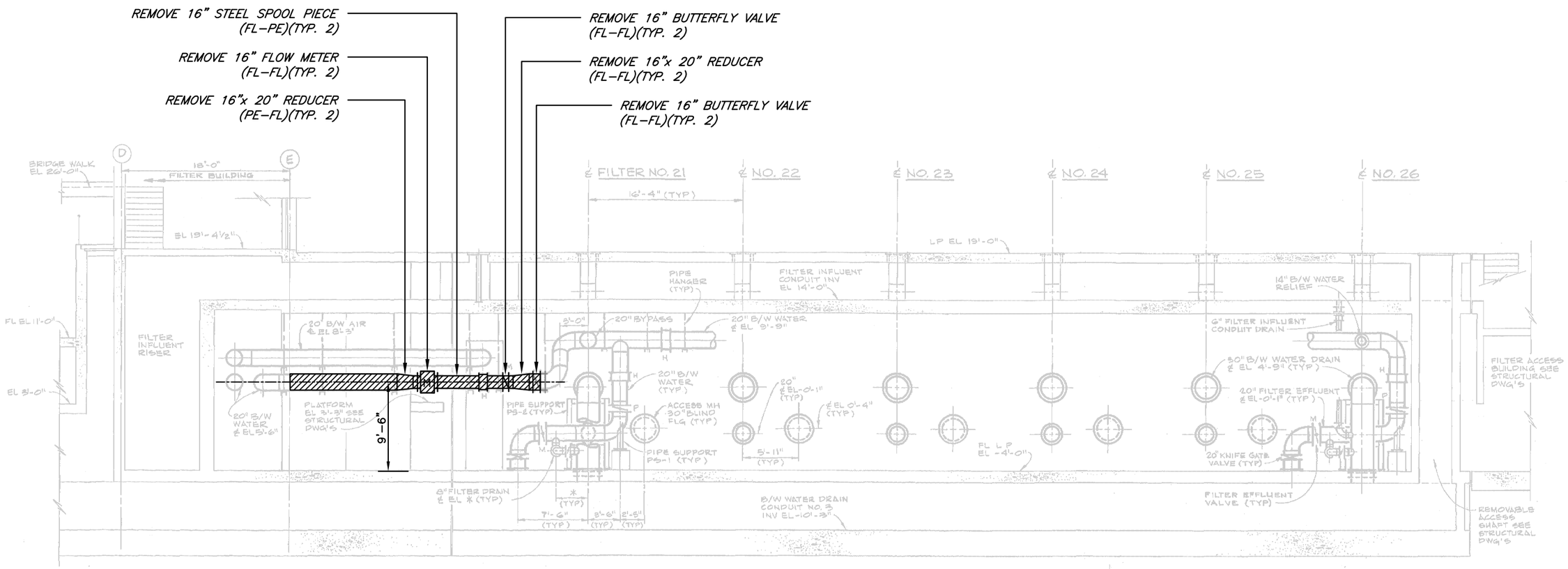

DEMOLITION SECTION VIEW - DENITRIFICATION FILTERS (21 - 36) (16" FLOW METERS)

N.T.S.

SHADED AREAS ON THIS SHEET INDICATE PIPING AND EQUIPMENT TO BE REMOVED

	No.	DATE	REVISIONS				
JACINTO CARLOS FERRAS, PE #49454 DESIGN DIVISION HEAD WASTEWATER DEPARTMENT	3			DES: MS DRN: JHJ CKD: DATE: 8/2/19	CITY of TAMPA WASTEWATER DEPARTMENT	HFCAWTP JUNCTION CHAMBER 2 SLUICE GATE REPLACEMENT DEMOLITION SECTION VIEW DENITRIFICATION FILTERS (21 - 36) (16" FLOW METERS)	SHEET 12A
	2						
	1						

User: ss13 Drawing Name: K:\WasteWater Projects\HFC ATWP Junction Chamber No.2 Sluice Gate Replacement\Drafting\DWG\HFCAWTP Junction Chamber 2 Sluice Gate Replacement 18-C-000024.dwg
Layout- Aug 01, 2019 - 4:19pm

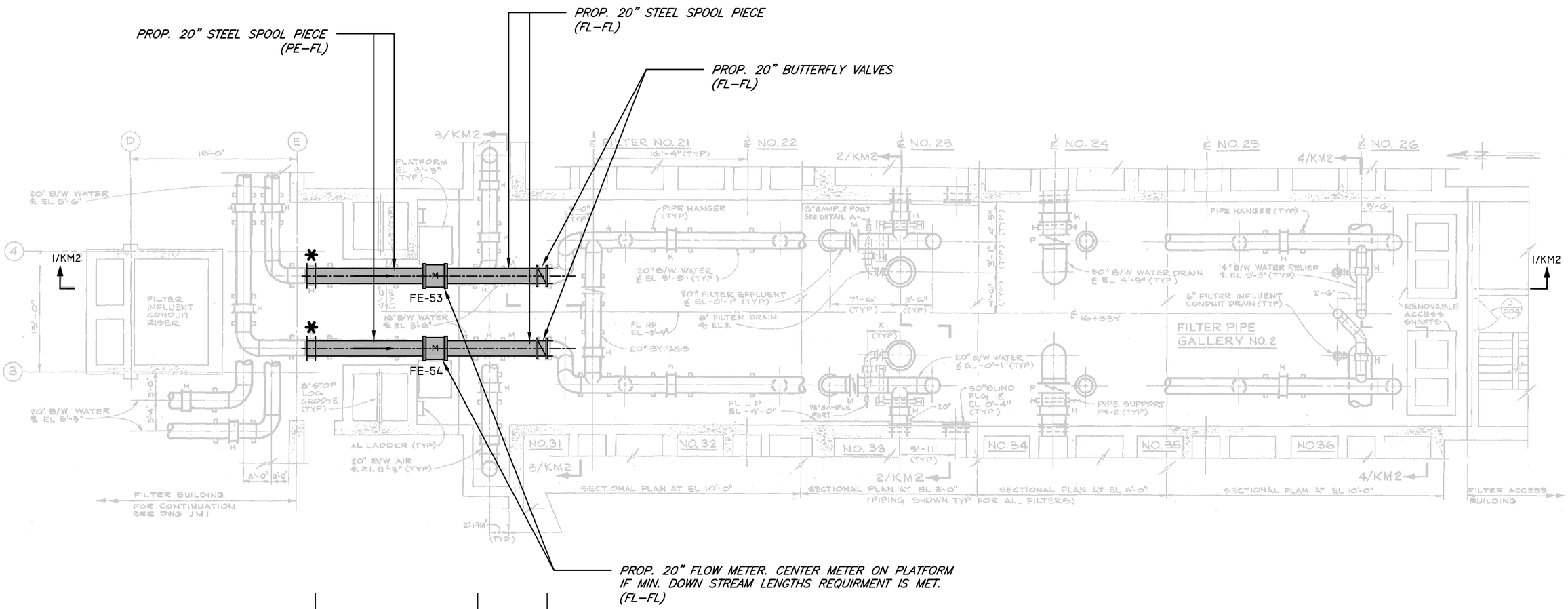

NOTES:

1. UPSTREAM/DOWNSTREAM LENGTHS PER MANUFACTURES RECOMMENDATIONS.

SHADED AREAS ON THIS SHEET INDICATE PIPING AND EQUIPMENT TO BE REMOVED

* REPLACE GASKET ON EXISTING HARDNESS COUPLING (TYP.)

PROPOSED - PLAN VIEW - DENITRIFICATION FILTERS (21 - 36)(20" FLOW METERS)

N.T.S.

JACINTO CARLOS FERRAS, PE #49454 DESIGN DIVISION HEAD WASTEWATER DEPARTMENT	No.	DATE	REVISIONS	DES: MS DRN: JHJ CKD: DATE: 8/2/19	CITY of TAMPA WASTEWATER DEPARTMENT	HFCAWTP JUNCTION CHAMBER 2 SLUICE GATE REPLACEMENT DENITRIFICATION FILTERS (21-36) - PROPOSED PLAN	SHEET 13
	3						
	2						
	1						

User: ss13 Drawing Name: K:\WasteWater Projects\HFC ATWP Junction Chamber No.2 Sluice Gate Replacement\Drafting\DWG\HFCAWTP Junction Chamber 2 Sluice Gate Replacement 18-C-000024.dwg
Layout- Aug 02, 2019 - 11:57am

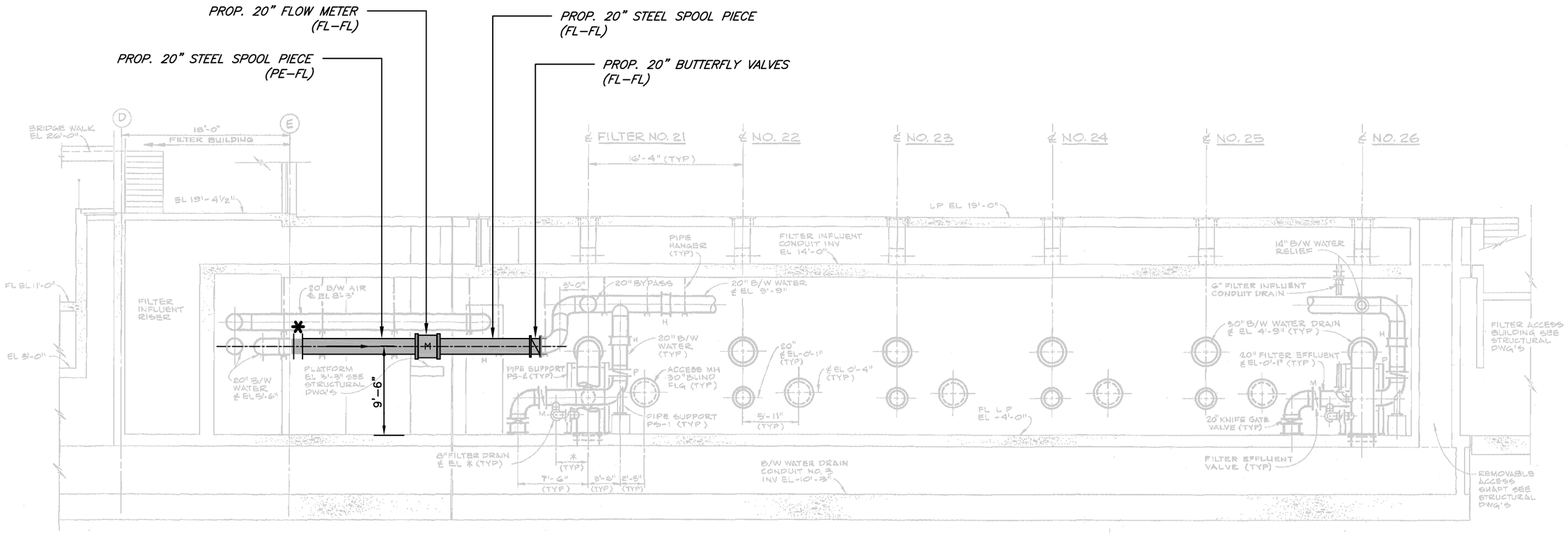

PROPOSED SECTION VIEW - DENITRIFICATION FILTERS (21 - 36) (16" FLOW METERS)

N.T.S.

SHADED AREAS ON THIS SHEET INDICATE PIPING AND EQUIPMENT TO BE REMOVED

* REPLACE GASKET ON EXISTING HARDNESS COUPLING (TYP.)

	No.	DATE	REVISIONS			
JACINTO CARLOS FERRAS, PE #49454 DESIGN DIVISION HEAD WASTEWATER DEPARTMENT	3			DES: MS DRN: JHJ CKD: DATE: 8/2/19	CITY of TAMPA WASTEWATER DEPARTMENT	HFCAWTP JUNCTION CHAMBER 2 SLUICE GATE REPLACEMENT PROPOSED SECTION VIEW DENITRIFICATION FILTERS (21 - 36) (16" FLOW METERS)
	2					SHEET 13A
	1					

User: ss13 Drawing Name: K:\WasteWater Projects\HFC ATWP Junction Chamber No.2 Sluice Gate Replacement\Drafting\DWG\HFCAWTP Junction Chamber 2 Sluice Gate Replacement 18-C-000024.dwg
Layout- Aug 02, 2019 - 11:51am

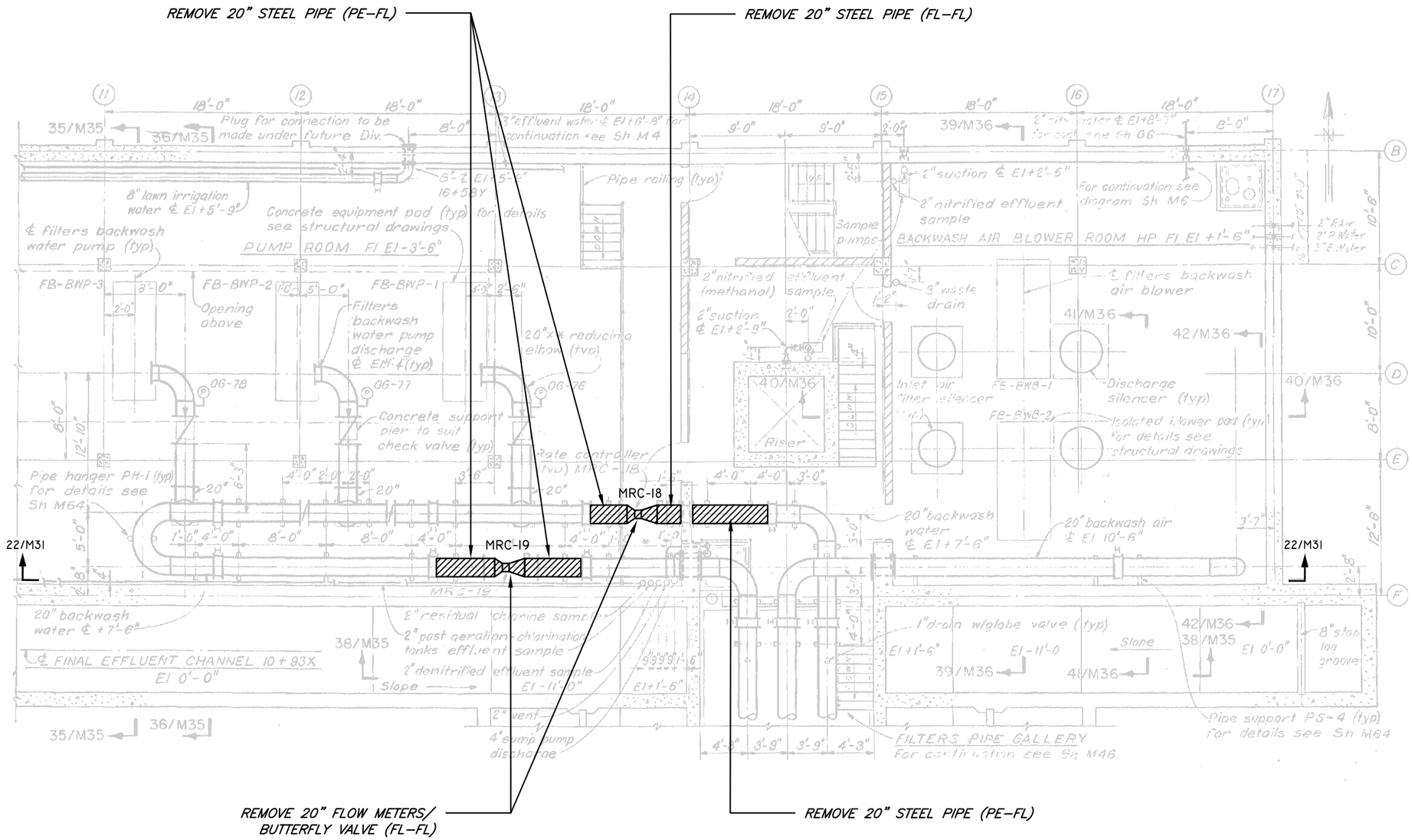

SHADED AREAS ON THIS SHEET INDICATE PIPING AND EQUIPMENT TO BE REMOVED

DEMOLITION - PLAN VIEW - FILTER BUILDING NO.1 (20" FLOW METERS)

N.T.S.

JACINTO CARLOS FERRAS, PE #49454 DESIGN DIVISION HEAD WASTEWATER DEPARTMENT	No.	DATE	REVISIONS	DES: MS DRN: JHJ CKD: DATE: 8/5/19	CITY of TAMPA WASTEWATER DEPARTMENT	HFCAWTP JUNCTION CHAMBER 2 SLUICE GATE REPLACEMENT FILTER BLDG. #1 - DEMOLITION PLAN	SHEET 14
	3						
	2						
	1						

User: ss13 Drawing Name: K:\WasteWater Projects\HFC ATWP Junction Chamber No.2 Sluice Gate Replacement\Drafting\DWG\HFCAWTP Junction Chamber 2 Sluice Gate Replacement 18-C-000024.dwg
Layout- Aug 05, 2019 - 9:30am

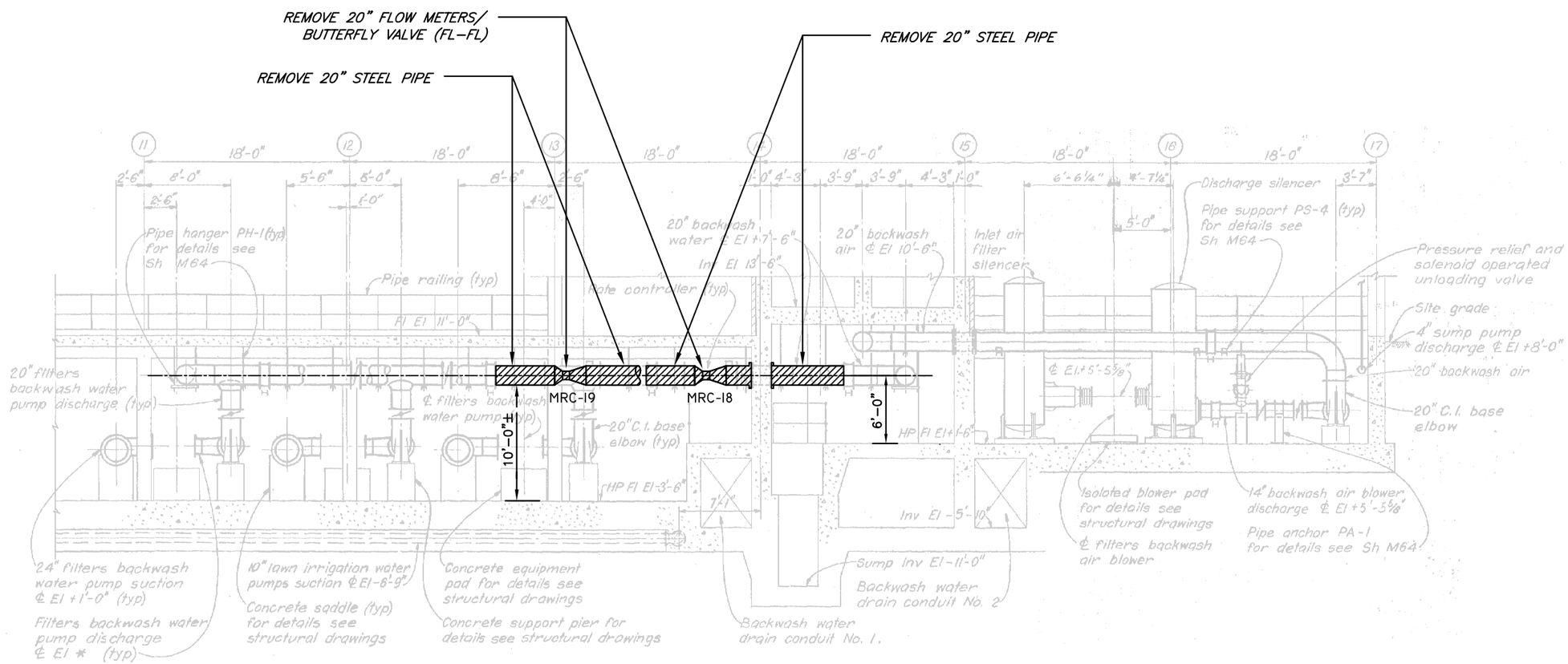

SHADED AREAS ON THIS SHEET INDICATE PIPING AND EQUIPMENT TO BE REMOVED

DEMOLITION - SECTION VIEW - FILTER BUILDING NO. 1 (20" FLOW METERS)

N.T.S.

	No.	DATE	REVISIONS				
JACINTO CARLOS FERRAS, PE #49454 DESIGN DIVISION HEAD WASTEWATER DEPARTMENT	3			DES: MS DRN: JHJ CKD: DATE: 8/5/19	CITY of TAMPA WASTEWATER DEPARTMENT	HFCAWTP JUNCTION CHAMBER 2 SLUICE GATE REPLACEMENT FILTER BLDG. #1 - DEMOLITION PLAN	SHEET 14A
	2						
	1						

User: ss13 Drawing Name: K:\WasteWater Projects\HFC ATWP Junction Chamber No.2 Sluice Gate Replacement\Drafting\DWG\HFCAWTP Junction Chamber 2 Sluice Gate Replacement 18-C-000024.dwg
Layout– Aug 05, 2019 – 10:04am

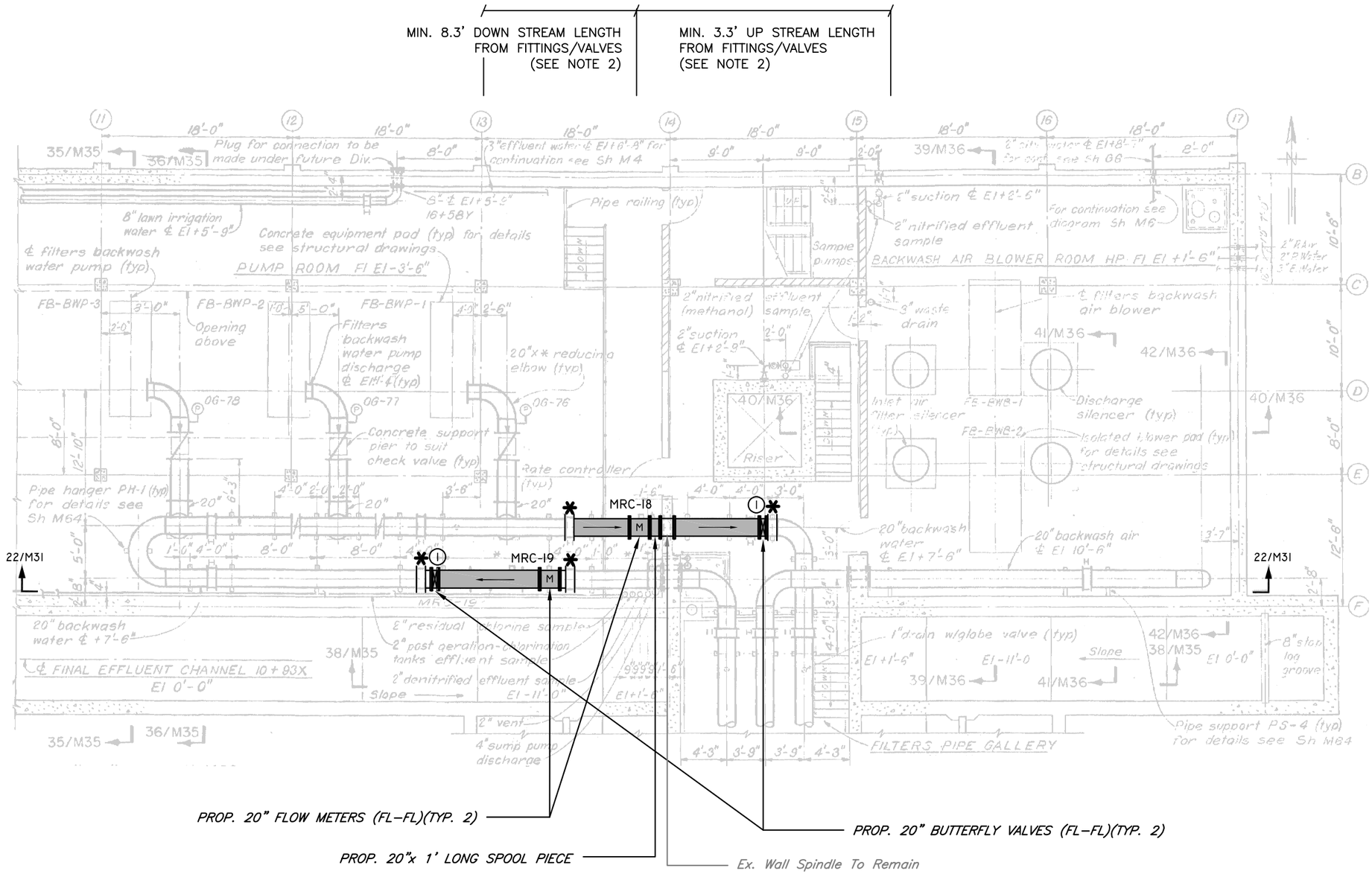

SHADED AREAS ON THIS SHEET INDICATE PIPING AND EQUIPMENT TO BE REMOVED

✱ REPLACE GASKET ON EXISTING HARDNESS COUPLING (TYP.)

PROPOSED - PLAN VIEW - FILTER BUILDING NO. 1 (20" FLOW METERS) MRC-18 & MRC-19

SCALE: 3/32" = 1-0'

NOTES:

1. PROP. BUTTERFLY VALVE OPERATOR SHALL FACE DOWN IN ORDER TO KEEP WALKWAY CLEAR.
2. UPSTREAM / DOWNSTREAM LENGTHS PER MANUFACTURES RECOMMEDATIONS.

JACINTO CARLOS FERRAS, PE #49454
DESIGN DIVISION HEAD
WASTEWATER DEPARTMENT

No.	DATE	REVISIONS
3		
2		
1		

DES: MS
DRN: JHJ
CKD:
DATE: 8/5/19

CITY of TAMPA
WASTEWATER DEPARTMENT

HFCAWTP JUNCTION CHAMBER 2
SLUICE GATE REPLACEMENT
FILTER BLDG. #1 - PROPOSED PLAN

SHEET 15

User: ss13 Drawing Name: K:\WasteWater Projects\HFC ATWP Junction Chamber No.2 Sluice Gate Replacement\Drafting\DWG\HFCAWTP Junction Chamber 2 Sluice Gate Replacement 18-C-000024.dwg
Layout- Aug 05, 2019 - 10:04am

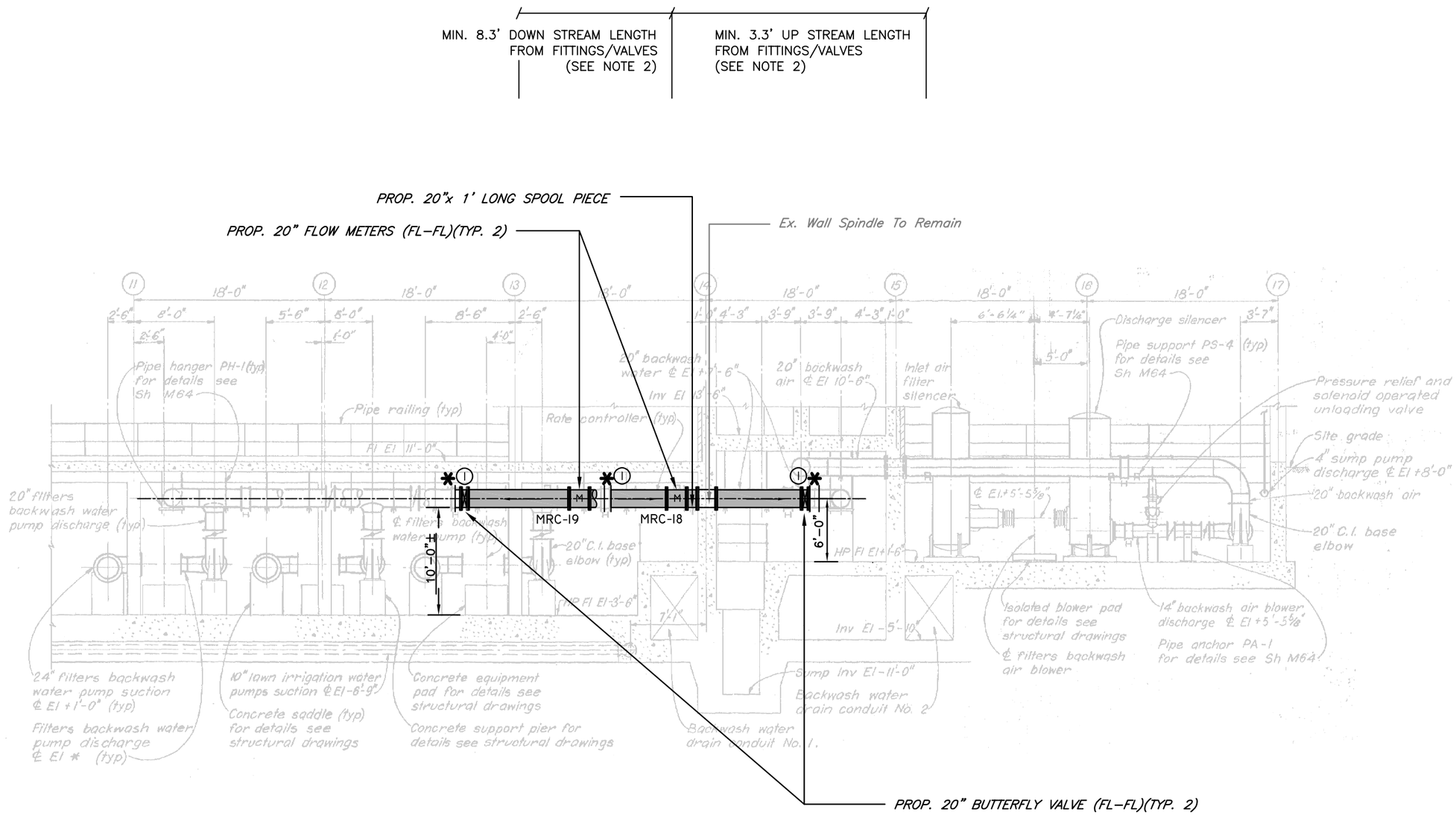

SHADED AREAS ON THIS SHEET INDICATE PIPING AND EQUIPMENT TO BE REMOVED

* REPLACE GASKET ON EXISTING HARDNESS COUPLING (TYP.)

PROPOSED - PLAN VIEW - FILTER BUILDING NO. 1 (20" FLOW METERS) MRC-18 & MRC-19

SCALE: 3/32" = 1-0'

NOTES:

1. PROP. BUTTERFLY VALVE OPERATOR SHALL FACE DOWN IN ORDER TO KEEP WALKWAY CLEAR.
2. UPSTREAM / DOWNSTREAM LENGTHS PER MANUFACTURES RECOMMEDATIONS.

JACINTO CARLOS FERRAS, PE #49454
DESIGN DIVISION HEAD
WASTEWATER DEPARTMENT

No.	DATE	REVISIONS
3		
2		
1		

DES: MS
DRN: JHJ
CKD:
DATE: 8/5/19

CITY of TAMPA
WASTEWATER DEPARTMENT

HFCAWTP JUNCTION CHAMBER 2
SLUICE GATE REPLACEMENT
FILTER BLDG. #1 - SECTION VIEW

SHEET 15A

User: ss13 Drawing Name: K:\WasteWater Projects\HFC ATWP Junction Chamber No.2 Sluice Gate Replacement\Drafting\DWG\HFCAWTP Junction Chamber 2 Sluice Gate Replacement 18-C-000024.dwg
Layout- Aug 05, 2019 - 10:36am

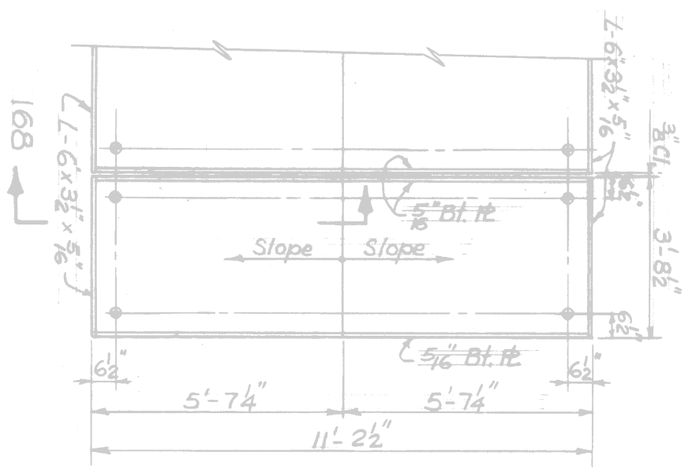

DETAIL
EXIST. REMOVABLE SLAB PLAN
TYPE B
Not to scale

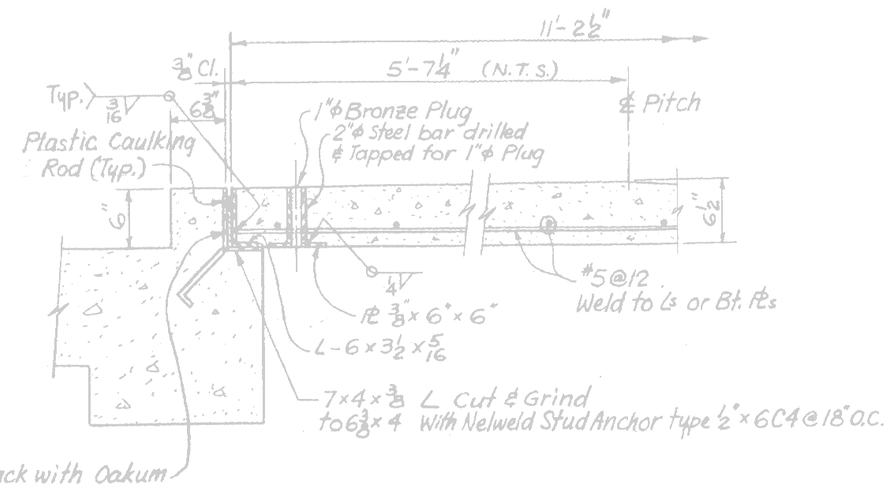

DETAIL
EXIST. REMOVABLE SLAB SECTION 168
TYPE B
Not to scale

(NOTE: APPROXIMATE WEIGHT OF ONE SLAB IS 3,500 LBS.)
TOTAL OF (4) SLABS (TOTAL WEIGHT 14,000 LBS)

JACINTO CARLOS FERRAS, P.E. #49454
DESIGN DIVISION HEAD
WASTEWATER DEPARTMENT

No.	DATE	REVISIONS
3		
2		
1		

DES: MS
DRN: JHJ
CKD:
DATE: 8/5/19

CITY of TAMPA
WASTEWATER DEPARTMENT

HFCAWTP JUNCTION CHAMBER 2
SLUICE GATE REPLACEMENT
EX. REMOVABLE SLAB SECTION TYPE B

SHEET
16

User: ss13 Drawing Name: K:\WasteWater Projects\HFC ATWP Junction Chamber No.2 Sluice Gate Replacement\Drafting\DWG\HFCAWTP Junction Chamber 2 Sluice Gate Replacement 18-C-000024.dwg
Layout- Aug 05, 2019 - 10:04am

GENERAL NOTES

THE WORK CONSIST OF FURNISHING ALL LABOR, MATERIALS, EQUIPMENT, AND TECHNICAL SUPERVISION TO INSTALL THE NEW MOTOR OPERATED VALVES, FLOW METER REMOTE TRANSMITTERS AND CIRCUIT BREAKERS AS INDICATED AND SHOWN. THE WORK INCLUDES, BUT IS NOT LIMITED TO, THE FOLLOWING:

1. CONTRACTOR SHALL SUBMIT SHOP DRAWINGS FOR APPROVAL PRIOR TO PURCHASING EQUIPMENT OR COMMENCING CONSTRUCTION.
2. ALL WIRING SHALL BE IDENTIFIED WITH NUMBERS AT ALL TERMINALS AND ON WIRING DIAGRAMS.
3. FIELD VERIFY ALL EQUIPMENT LOCATIONS AND CONNECTIONS PRIOR TO COMMENCING CONSTRUCTION.
4. ALL NEW EQUIPMENT SHALL BE PERMANENTLY IDENTIFIED WITH A BLACK ON WHITE LAMACOID TAG ENGRAVED WITH MINIMUM 3/16 INCH LETTERING.
5. ALL CONDUCTOR LENGTHS SHALL BE CONTINUOUS. NO SPLICES OR CONDUCTOR TERMINATIONS SHALL BE PERMITTED UNLESS SPECIFICALLY DESIGNATED IN THE DRAWINGS.
6. ALL EXISTING INSTALLATIONS DENOTED ON THE DRAWINGS ARE FOR THE CONTRACTORS REFERENCE ONLY. ALL EXISTING INSTALLATIONS SHALL BE FIELD VERIFIED PRIOR TO SUBMITTING A BID AND PRIOR TO COMMENCING CONSTRUCTION.
7. ALL ELECTRICAL WORK SHALL BE PERFORMED IN ACCORDANCE WITH THE FLORIDA BUILDING CODE 6TH EDITION 2017, THE NATIONAL FIRE PROTECTION ASSOCIATION (NFPA) SERIES 70/NATIONAL ELECTRICAL CODE (NEC) 2014 EDITION AND CHAPTER 6 OF THE CITY OF TAMPA CODE.
8. TEST AND START–UP REPORTS FOR THE PROPOSED MOTOR OPERATED VALVES AND FLOW METER REMOTE TRANSMITTERS SHALL BE INCLUDED IN THE OPERATION AND MAINTENANCE (O&M) MANUALS PROVIDED UNDER THIS CONTRACT. ALL CIRCUIT BREAKER SETTINGS SHALL BE TABULATED AND INCLUDED IN THE O&M MANUAL.

SCOPE OF WORK

THE WORK CONSISTS OF FURNISHING ALL LABOR, MATERIALS, EQUIPMENT, TRANSPORTATION, AND PERFORMING ALL OPERATIONS REQUIRED TO SUPPORT THE INSTALLATION AND COMMISSIONING OF THE ELECTRICAL PORTION OF THE HFC AWTP SLUICE GATE AND FLOW METER REPLACEMENT. THE WORK INCLUDES, BUT IS NOT LIMITED TO, THE FOLLOWING:

1. SUBMIT WORKING DRAWINGS, PARTS SCHEDULES AND CUT–SHEETS TO THE ENGINEER.
2. FURNISH AND INSTALL ALL EQUIPMENT AS SHOWN ON THE PLANS AND DESCRIBED IN THE SPECIFICATIONS.

SPECIFICALLY:

A. <u>INSTALLATION</u>

1. PRIOR TO DEMOLITION, THE PROPOSED MOTOR OPERATED VALVE ACTUATORS AND FLOW METER REMOTE TRANSMITTERS SHALL BE ON SITE AND READY FOR INSTALLATION. NO TEMPORARY POWER SHALL BE REQUIRED DURING THE REPLACEMENT OF THE EQUIPMENT.
2. VERIFY EXISTING CONTROL AND POWER CONNECTIONS IN THE FIELD PRIOR TO COMMENCING DEMOLITION WORK.
3. REMOVE THE EXISTING MOTOR OPERATED VALVE ACTUATORS AND FLOW METER REMOTE TRANSMITTERS. PREPARE THE EXISTING SPACES AS REQUIRED TO INSTALL THE NEW THE EQUIPMENT.
4. INSTALL THE MOTOR OPERATED VALVE ACTUATORS AND FLOW METER REMOTE TRANSMITTERS.
5. INSTALL NEW CONDUIT, CONDUCTORS, JUNCTION BOXES, CHANNEL SUPPORTS AND CIRCUIT BREAKERS AS SHOWN, INDICATED OR REQUIRED.
6. MAKE CABLE CONNECTIONS AS SHOWN.

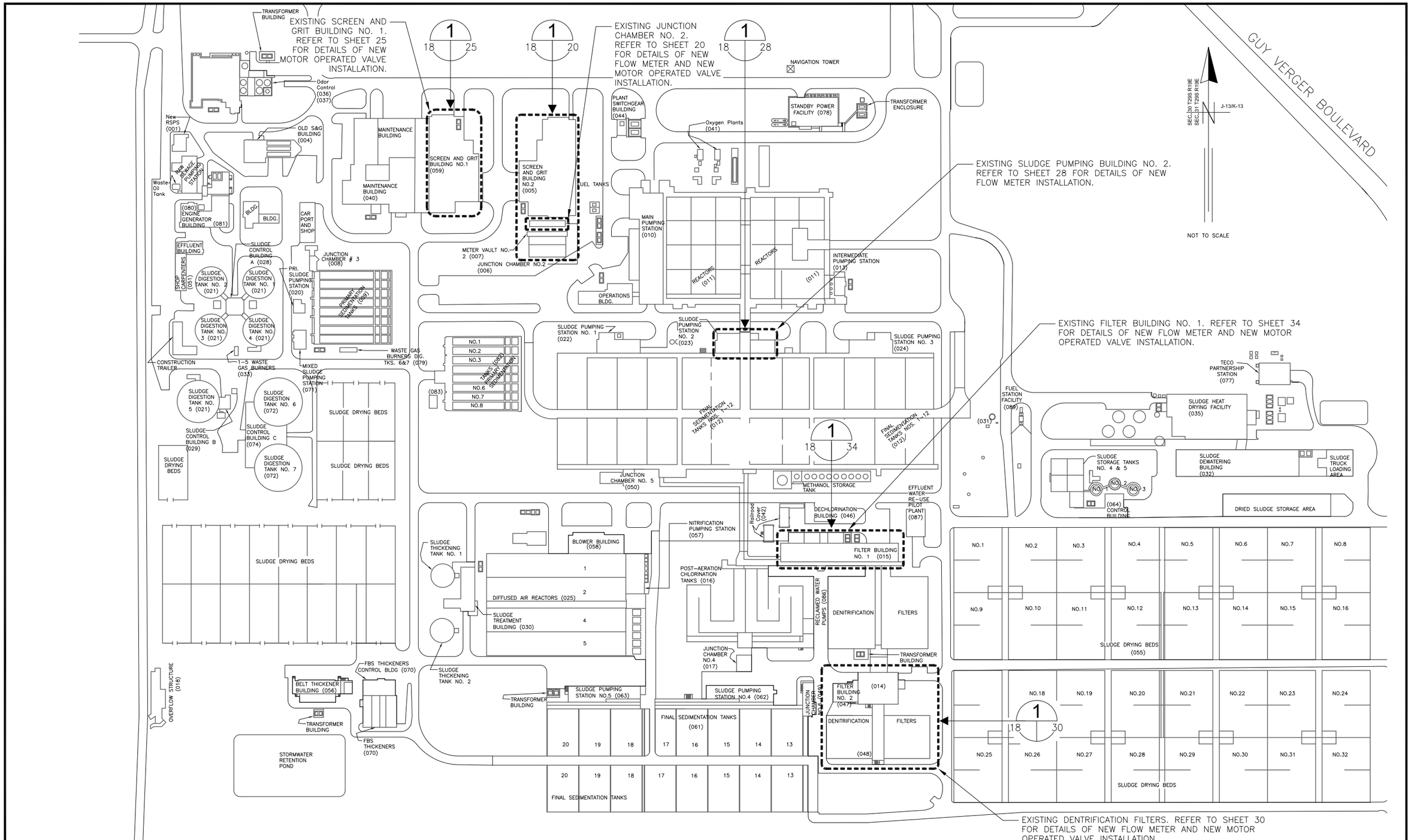

TRICON CONSULTING ENGINEERS
777 S. Harbour Island Blvd, Suite 350
Tampa, FL 33602
813.227.9190
Certificate of Authorization No. 8363

JOB No.	231900542					
DESIGNED	TDT					
DRAWN	JLH					
CHECKED	TDT					
DATE	8/2019	No.	DATE	BY	APP	REVISION DESCRIPTION

SCALE
NOT TO SCALE

City of Tampa Wastewater Department
HOWARD F. CURREN AWTP
SLUICE GATE AND FLOW METER REPLACEMENT

SLUICE GATE REPLACEMENT OVERALL ELECTRICAL SITE PLAN

TIMOTHY THOMAS, P.E. No. 47079

SHEET NUMBER
18
FILE: 171700842E01

CONDUIT RUN EXPOSED

CONDUIT RUN CONCEALED UNDERGROUND

CONDUIT RUN CONCEALED IN FLOOR OR SLAB

G — G GROUNDING ELECTRODE CONDUCTOR

CONDUIT STUB OUT AND CAP

GROUND ROD

JUNCTION BOX

JUNCTION BOX WITH FLEXIBLE CONNECTION

480V
15 KVA, 1*
120/240V

TRANSFORMER, 480V INDICATED PRIMARY VOLTAGE, 120/240V INDICATES SECONDARY VOLTAGE, 15 KVA REPRESENTS POWER RATING, AND 1* INDICATES SINGLE PHASE (THREE PHASE IF NOT INDICATED)

3P
30A

THERMAL MAGNETIC CIRCUIT BREAKER WITH NUMBER OF POLES AND AMPERE RATING

XX

COMBINATION MAGNETIC STARTER WITH CONTROL POWER TRANSFORMER (SIZED FOR LOAD). LETTERS INDICATE TYPE :
N – NON-REVERSING
R – REVERSING
2S – TWO-SPEED
C – CONTACTOR
SS – SOLID STATE SOFT START

XXX

XXX DEVICE	DESCRIPTION
HLS	HIGH LEVEL SWITCH
HOA	HAND-OFF-AUTO
LD	LEAK DETECTION
LLS	LOW LEVEL SWITCH
LOR	LOCAL-OFF-REMOTE
PB	PUSH BUTTON
RTU	REMOTE TERMINAL UNIT
SS	SOFT STARTER
SS/B	SOFT START OR BYPASS
TCP	TEMPERATURE CONTROL PANEL
TS	TEMPERATURE SWITCH
TVSS	TRANSIENT VOLTAGE SURGE SUPPRESSOR
ZS	POSTION SENSOR (LIMIT SWITCH)

FUSE

XX

MOTOR

THERMAL OVERLOAD

UTILITY METER

TRANSFER SWITCH

ELECTRIC PANELBOARD

DISCONNECT OR SAFETY SWITCH

FLOAT SWITCH. OPENS ON LOW LEVEL.

FLOAT SWITCH. CLOSES ON LOW LEVEL.

NORMALLY OPEN (N.O.) CONTACT

NORMALLY CLOSED (N.C.) CONTACT

GROUND CONNECTION

R

INDICATING PILOT LIGHT LETTER INDICATES COLOR OF LENS
R = RED
A = AMBER

DISCONNECT OR TOGGLE SWITCH

NORMALLY OPEN MOMENTARY CIRCUIT CLOSING PUSH-BUTTON SWITCH. SPRING OPEN. NUMBER OF ELECTRICAL CONTACTS ON SWITCH SHOWN ON CONTROL SCHEMATIC

NORMALLY CLOSED MOMENTARY CIRCUIT OPENING PUSH-BUTTON SWITCH. SPRING CLOSE. NUMBER OF ELECTRICAL CONTACTS ON SWITCH SHOWN ON CONTROL SCHEMATIC

LIMIT SWITCH NORMALLY OPEN CONTACT. CONTACT CLOSES WHEN ACTUATED

TORQUE SWITCH NORMALLY CLOSED CONTACT. CONTACT OPENS WHEN ACTUATED

PUMP THERMAL SENSOR

50/51/51G

SOLID STATE TRIP UNIT WITH FUNCTIONS NOTED:
50 INSTANTANEOUS TRIP
51 TIME DELAY TRIP
51G GROUND FAULT TRIP

ABBREVIATIONS:

4C	4 CONDUCTOR
A	AMPS
AF	AMPERE FRAME
AM	AMMETER
AT	AMPERE TRIP
AFF	ABOVE FINISHED FLOOR
AFG	ABOVE FINISHED GRADE
ATL	ACROSS-THE-LINE
C	CONDUIT
CLF	CURRENT LIMITING FUSE
CT	CURRENT TRANSFORMER
CU	COPPER
EO	ELECTRICALLY OPERATED
ELEC	ELECTRICAL
ETM	ELAPSED TIME METER
EX	EXISTING
EXP	EXPLOSION PROOF
FU	FUSE
GFI	GROUND FAULT INTERRUPTER
GND	GROUNDING CONDUCTOR
HP	HORSEPOWER
HZ	HERTZ
IG	ISOLATED GROUND
KI	KIRK-KEY INTERLOCK
KVA	KILOVOLT AMPERES
KW	KILOWATTS
MAX	MAXIMUM
MIN	MINIMUM
N/A	NOT APPLICABLE
NC	NORMALLY CLOSED
NO	NORMALLY OPEN
PB	PUSHBUTTON
PH	PHASE
PM	POWER MONITOR
RECP	RECEPTACLE
RPM	REVOLUTIONS PER MINUTE
RTU	REMOTE TERMINAL UNIT
RVSS	REDUCED VOLTAGE SOFT STARTER
SPD	SURGE PROTECTION DEVICE
TYP	TYPICAL
V	VOLTS
W	WIRE
WP	WEATHERPROOF

EXAMPLE OF SECTION CUT AND DETAIL

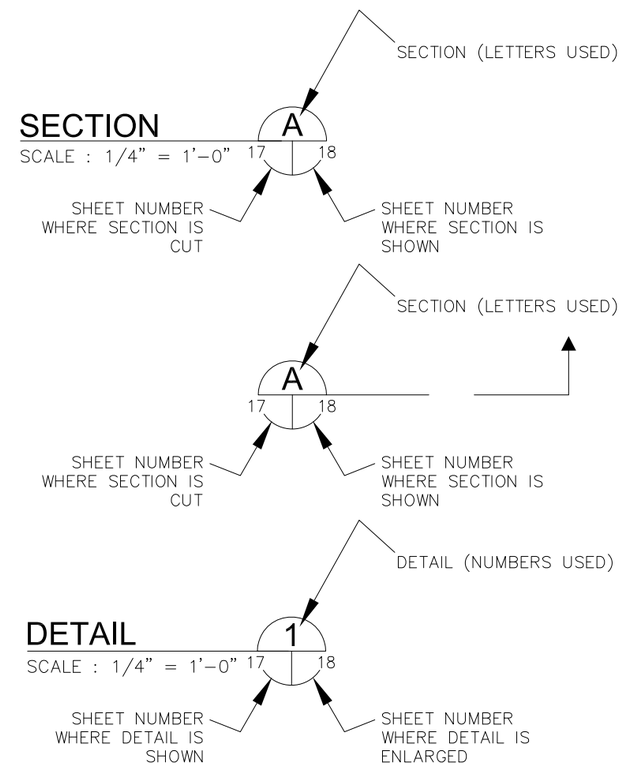

FIT FLOW INDICATING TRANSMITTER

FE FLOW METER ELEMENT

M

MOTOR OPERATED VALVE

TRICON CONSULTING ENGINEERS
777 S. Harbour Island Blvd,
Suite 350
Tampa, FL 33602
813.227.9190
Certificate of Authorization No. 8363

JOB No.	231900542					
DESIGNED	TDT					
DRAWN	JLH					
CHECKED	TDT					
DATE	8/2019	No.	DATE	BY	APP	REVISION DESCRIPTION

SCALE
AS SHOWN

City of Tampa Wastewater Department
HOWARD F. CURREN AWTP
SLUICE GATE AND FLOW METER REPLACEMENT

INDEX, SCHEDULES AND GENERAL NOTES

TIMOTHY THOMAS, P.E. No. 47079

SHEET NUMBER
19

FILE: 171700842E01

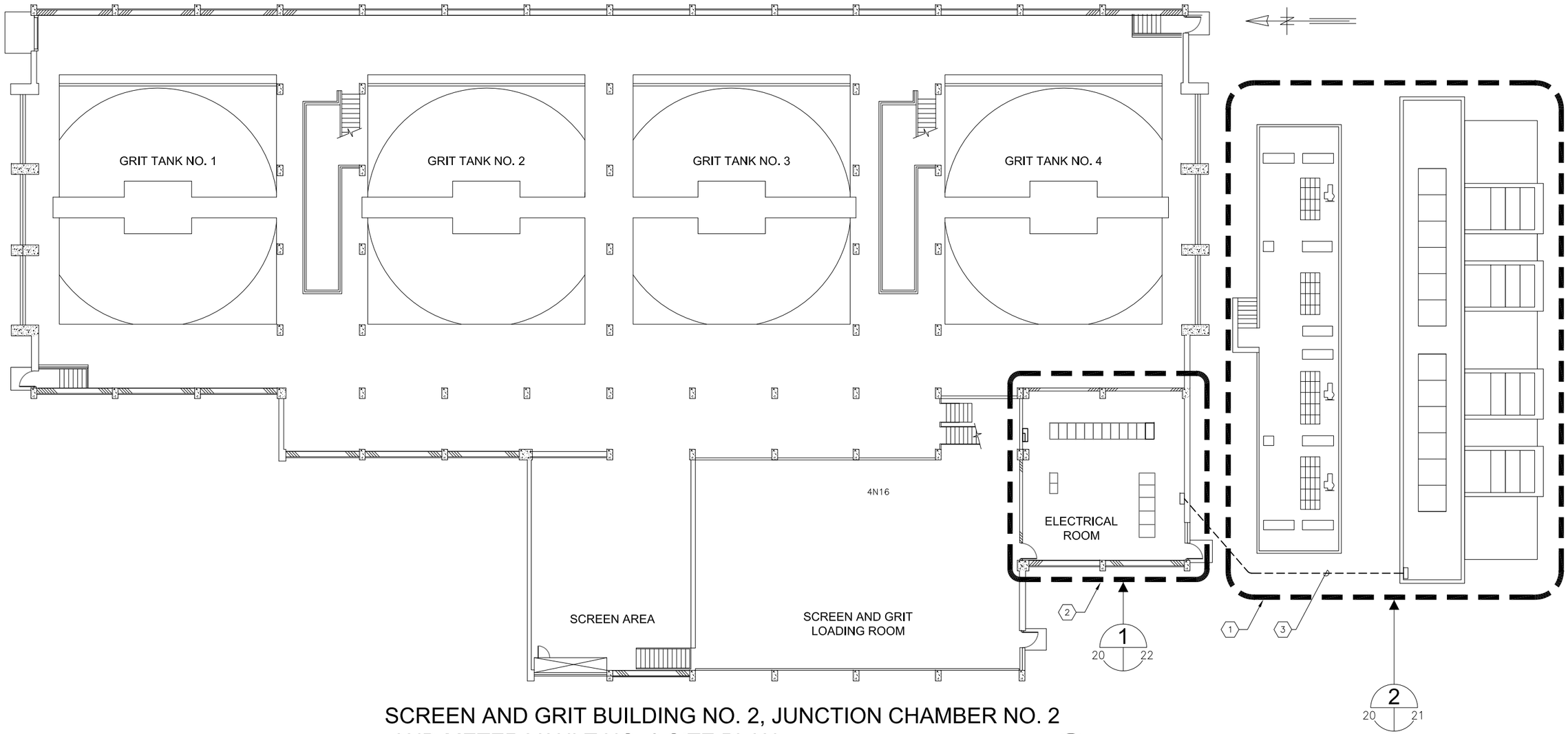

SCREEN AND GRIT BUILDING NO. 2, JUNCTION CHAMBER NO. 2 AND METER VAULT NO. 2 SITE PLAN

SCALE : 1" = 20'-0"

KEYED NOTES:

1. EXISTING JUNCTION CHAMBER NO. 2 AND METER VAULT NO. 2. REFER TO SHEET 21 FOR WORK REQUIRED.
2. EXISTING ELECTRICAL ROOM IN SCREEN AND GRIT BUILDING NO. 2. REFER TO SHEET 22 FOR WORK REQUIRED.
3. EXISTING CONDUITS AND CONDUCTORS FROM METER VAULT NO. 2 TO PULL BOX IN SCREEN AND GRIT BUILDING NO. 2 ELECTRICAL ROOM. REFER TO SHEETS 21 AND 22.

TRICON CONSULTING ENGINEERS
777 S. Harbour Island Blvd,
Suite 350
Tampa, FL 33602
813.227.9190
Certificate of Authorization No. 8363

JOB No.	231900542
DESIGNED	TDT
DRAWN	JLH
CHECKED	TDT
DATE	8/2019

No.	DATE	BY	APP	REVISION DESCRIPTION

SCALE: AS SHOWN

City of Tampa Wastewater Department
HOWARD F. CURREN AWTP
SLUICE GATE AND FLOW METER REPLACEMENT

SCREEN & GRIT BLDG NO. 2, JC NO. 2 AND METER VAULT NO. 2 SITE PLAN

TIMOTHY THOMAS, P.E. No. 47079

SHEET NUMBER 20

FILE: 231900542E01

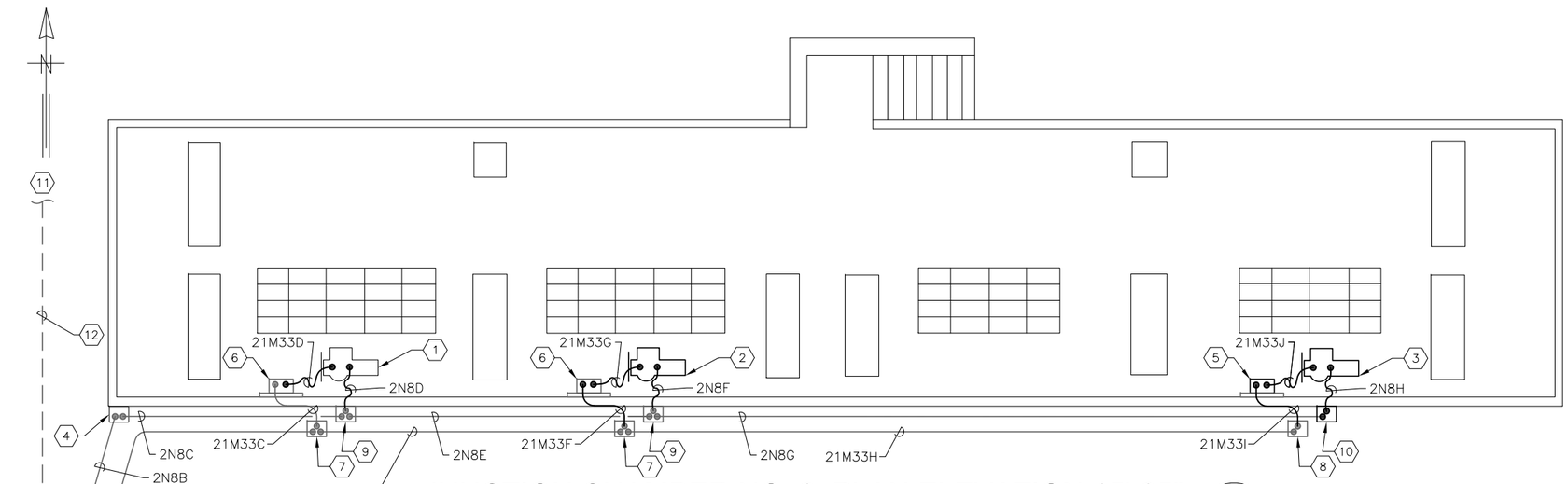

JUNCTION CHAMBER NO. 2: PLAN ELEVATION 15'-25"

SCALE : 1/16" = 1'-0"

1 (20 / 21)

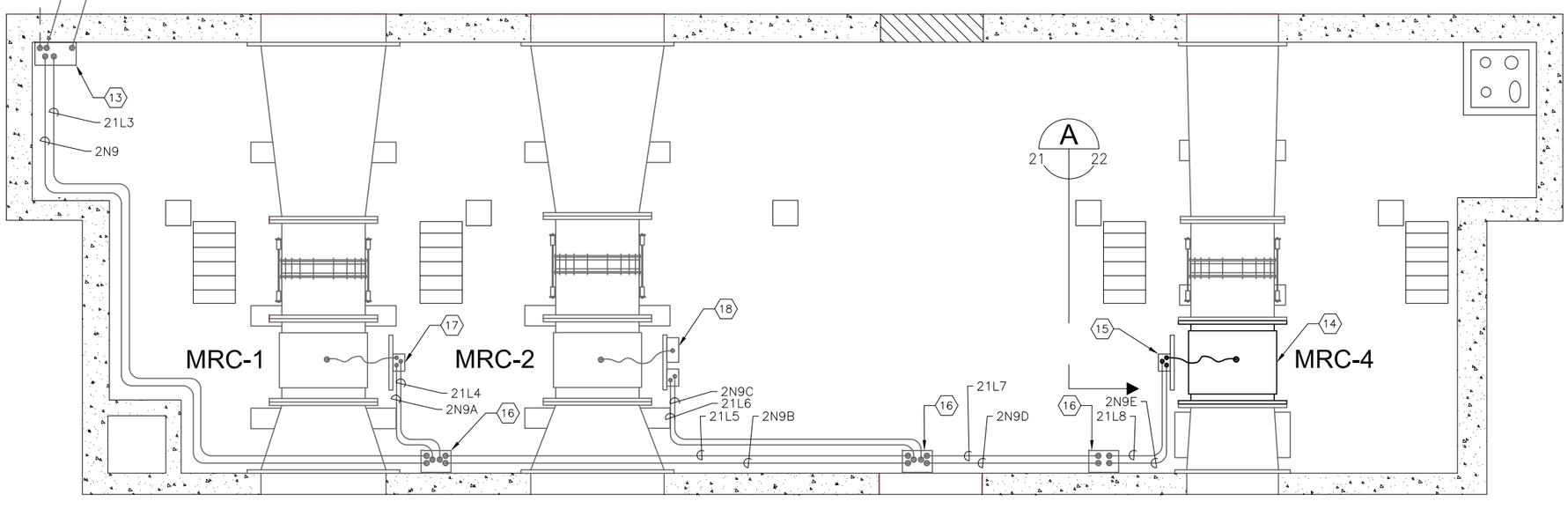

METER VAULT NO. 2: PLAN ELEVATION -5'-92"

SCALE : 1/16" = 1'-0"

2 (20 / 21)

KEYED NOTES:

1. EXISTING MOTOR OPERATED VALVE 'JC-2-SG-1' TO BE REPLACED.
2. EXISTING MOTOR OPERATED VALVE 'JC-2-SG-2' TO BE REPLACED.
3. EXISTING MOTOR OPERATED VALVE 'JC-2-SG-4' TO BE REPLACED.
4. EXISTING JUNCTION BOX LOCATED ON SOUTHWEST CORNER OF JUNCTION CHAMBER NO. 2 (ELEVATION 15'-25"). JUNCTION BOX SHALL REMAIN AND BE REUSED.
5. EXISTING DISCONNECT TO BE REPLACED. PROVIDE AND INSTALL NEW 600V, 30A, NON-FUSED DISCONNECT IN NEMA 4X STAINLESS STEEL ENCLOSURE. MOUNT DISCONNECT WITH 1-5/8" X 1-5/8" STAINLESS STEEL UNISTRUT ATTACHED TO HANDRAIL WITH AND STAINLESS STEEL U-BOLTS.
6. EXISTING DISCONNECT TO REMAIN AND BE REUSED.
7. EXISTING JUNCTION BOX FOR 480V POWER CONDUCTORS TO REMAIN AND BE REUSED. CONTRACTOR SHALL UTILIZE POLARIS IPL4-3 (THREE PORT) PRE-INSULTAED CONNECTORS (THREE TOTAL) FOR 480V PHASE CONDUCTOR CONNECTIONS.
8. EXISTING JUNCTION BOX FOR 480V POWER CONDUCTORS TO REMAIN AND BE REUSED. CONTRACTOR SHALL UTILIZE POLARIS IT-4 (TWO PORT) PRE-INSULTAED CONNECTORS (THREE TOTAL) FOR 480V PHASE CONDUCTOR CONNECTIONS.
9. EXISTING JUNCTION BOX FOR CONTROL CONDUCTORS TO REMAIN AND BE REUSED.
10. CONTRACTOR TO PROVIDE AND INSTALL NEW 4"X6"X3" NEMA 4X STAINLESS STEEL JUNCTION BOX FOR CONTROLS CONDUCTORS. HAMMOND EJ643S16 OR EQUAL.
11. CONTINUES TO PULL BOX IN SCREEN AND GRIT BUILDING NO. 2 ELECTRICAL ROOM (KEYED NOTE #5) ON SHEET 22.
12. 21M33A, 21L2
13. EXISTING JUNCTION BOX LOCATED ON NORTHWEST CORNER OF METER VAULT NO. 2 (AT CEILING SLAB OF ELEVATION -5'-92"). JUNCTION BOX SHALL REMAIN AND BE REUSED.
14. NEW FLOW METER ELEMENT TO BE PROVIDED AND INSTALLED BY CONTRACTOR. SEE DETAIL ON SHEET 40.
15. CONTRACTOR TO REMOVE EXISTING FLOW METER TRANSMITTER AND REPLACE WITH NEW FLOW METER TRANSMITTER. REFER TO SPECIFICATIONS FOR FLOW METER TRANSMITTER REQUIREMENTS. REFER TO DETAIL ON SHEET 22 FOR FLOW METER TRANSMITTER INSTALLATION DETAILS.
16. EXISTING JUNCTION BOX TO REMAIN AND BE REUSED.
17. EXISTING MRC-1. MRC-1 TO REMAIN. PROVIDE NEW CONDUIT AND CONDUCTORS AS NOTED.
18. EXISTING MRC-2. MRC-2 TO REMAIN. PROVIDE NEW CONDUIT AND CONDUCTORS AS NOTED.

TRICON CONSULTING ENGINEERS
777 S. Harbour Island Blvd, Suite 350
Tampa, FL 33602
813.227.9190
Certificate of Authorization No. 8363

JOB No.	231900542
DESIGNED	TDT
DRAWN	JLH
CHECKED	TDT
DATE	8/2019

No.	DATE	BY	APP	REVISION DESCRIPTION

SCALE: AS SHOWN

City of Tampa Wastewater Department

HOWARD F. CURREN AWTP
SLUICE GATE AND FLOW METER REPLACEMENT

JUNCTION CHAMBER NO. 2 AND METER VAULT NO. 2 SITE PLAN

TIMOTHY THOMAS, P.E. No. 47079

SHEET NUMBER 21

FILE: 231900542E01

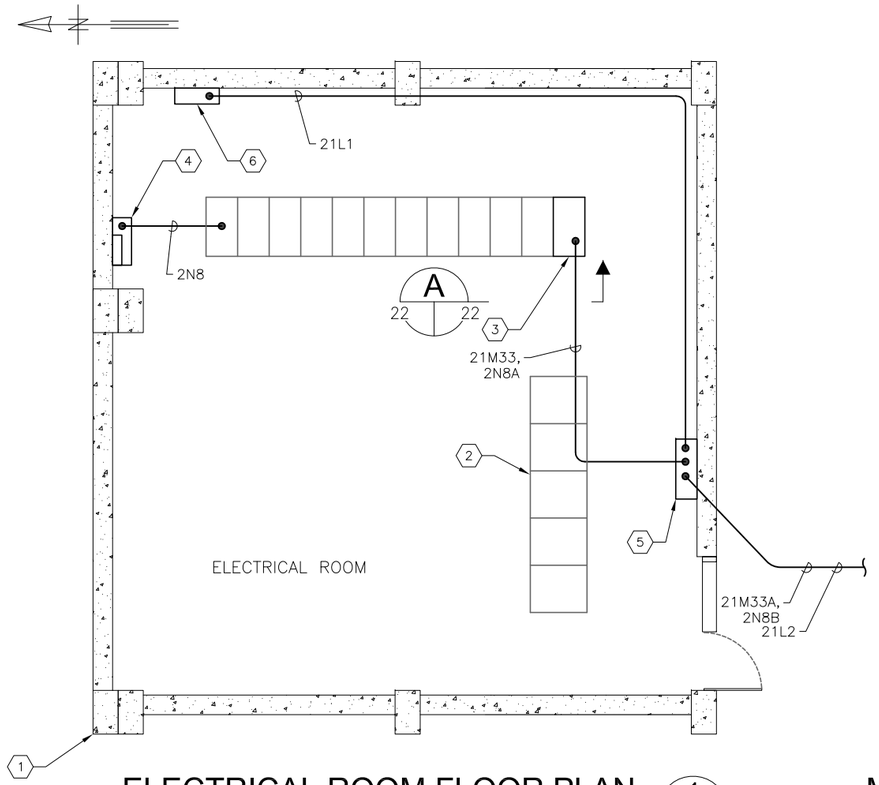

ELECTRICAL ROOM FLOOR PLAN

SCALE : 1/8" = 1'-0"

1 | 20 22

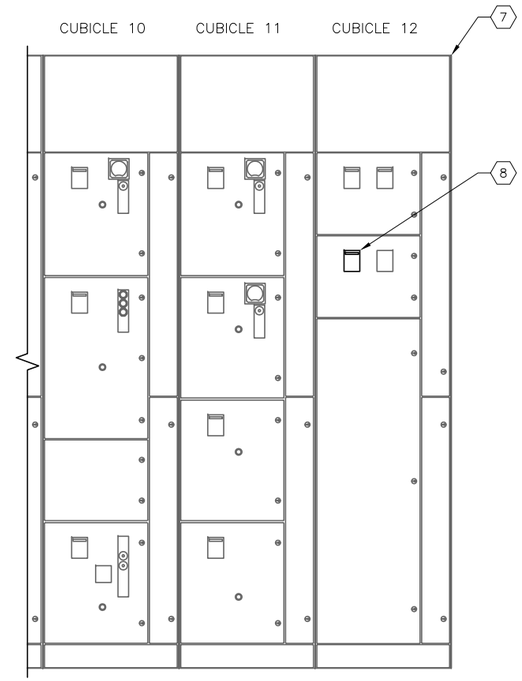

MCC-21 PARTIAL FRONT ELEVATION

SCALE: NOT TO SCALE

A | 22 22

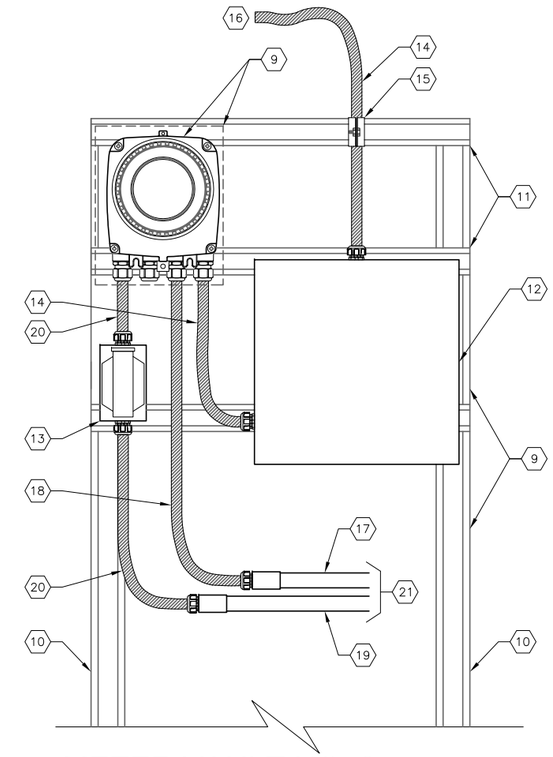

METER VAULT NO. 2 FLOW METER TRANSMITTER INSTALLATION DETAILS

SCALE: NOT TO SCALE

A | 21 22

KEYED NOTES:

1. EXISTING SCREEN AND GRIT BUILDING NO. 2 ELECTRICAL ROOM.
2. EXISTING SWITCHGEAR NO. 20. NO WORK REQUIRED.
3. EXISTING MCC-21. REFER TO PARTIAL FRONT ELEVATION ON THIS SHEET FOR WORK REQUIRED IN CUBICLE 12.
4. EXISTING SCADA RTU #4 IN SCREEN AND GRIT BUILDING NO. 2 (WITH JUNCTION BOX ABOVE).
5. EXISTING ELECTRICAL ROOM PULL BOX.
6. EXISTING 120/208V, 3ø PANELBOARD 'LP-21'.
7. EXISTING MCC-21.
8. CONTRACTOR SHALL REMOVE EXISTING 480V, 3-POLE, 70A TRIP CIRCUIT BREAKER CURRENTLY INSTALLED FOR JC-2-SG-1, JC-2-SG-2 AND JC-2-SG-4. REPLACE WITH 80A TRIP CIRCUIT BREAKER. REFER ALSO TO SPECIFICATIONS.
9. CONTRACTOR SHALL REMOVE EXISTING FLOW METER TRANSMITTER AND INSTALL NEW PROVIDE AND INSTALL ABB WATER MASTER REMOTE TRANSMITTER.
10. EXISTING UNISTRUT STANCHION AND BASE TO REMAIN AND BE REUSED.
11. EXISTING UNISTRUT SHALL BE REUSED IF POSSIBLE. CONTRACTOR SHALL MODIFY UNSTRUT LOCATIONS OR PROVIDE NEW STAINLESS STEEL UNISTRUT TO ACCOMMODATE NEW FLOW METER TRANSMITTER.
12. EXISTING JUNCTION BOX TO REMAIN AND BE REUSED.
13. EXISTING SINGLE-POLE SWITCH (120V DISCONNECTING MEANS) TO REMAIN AND BE REUSED.
14. PROVIDE AND INSTALL 3/4" LIQUID-TIGHT, NON-METALLIC, FLEXIBLE CONDUIT FOR MANUFACTURER SUPPLIED SENSOR CABLE.
15. PROVIDE AND INSTALL STAINLESS STEEL CONDUIT CLAMP TO SUPPORT NON-METALLIC, FLEXIBLE CONDUIT.
16. CONTINUE LIQUID-TIGHT, NON-METALLIC, FLEXIBLE CONDUIT AS NEAR AS POSSIBLE TO FLOW METER ELEMENT. ALL SLACK SENSOR CABLE SHALL BE LOOPED AT FLOW METER ELEMENT AND SECURED WITH NYLON TIE-WRAPS.
17. EXISTING CONDUIT (2N9E) TO BE REUSED.
18. PROVIDE AND INSTALL NEW 3/4" LIQUID-TIGHT, NON-METALLIC, FLEXIBLE CONDUIT FOR 2N9E.
19. EXISTING CONDUIT FOR 120V AC POWER (PANELBOARD 'LP-21' CIRCUIT 18) TO BE REUSED.
20. PROVIDE AND INSTALL NEW 3/4" LIQUID-TIGHT, NON-METALLIC, FLEXIBLE CONDUIT FOR 120V AC POWER.
21. REFER TO SHEET 21 FOR CONTINUATION.

TRICON CONSULTING ENGINEERS
777 S. Harbour Island Blvd, Suite 350
Tampa, FL 33602
813.227.9190
Certificate of Authorization No. 8363

JOB No.	231900542
DESIGNED	TDT
DRAWN	JLH
CHECKED	TDT
DATE	8/2019

No.	DATE	BY	APP	REVISION DESCRIPTION

SCALE: AS SHOWN

City of Tampa Wastewater Department
HOWARD F. CURREN AWTP
SLUICE GATE AND FLOW METER REPLACEMENT

SCREEN & GRIT BLDG NO. 2, ELECTRICAL ROOM PLAN AND DETAILS

TIMOTHY THOMAS, P.E. No. 47079

SHEET NUMBER 22

FILE: 231900542E01

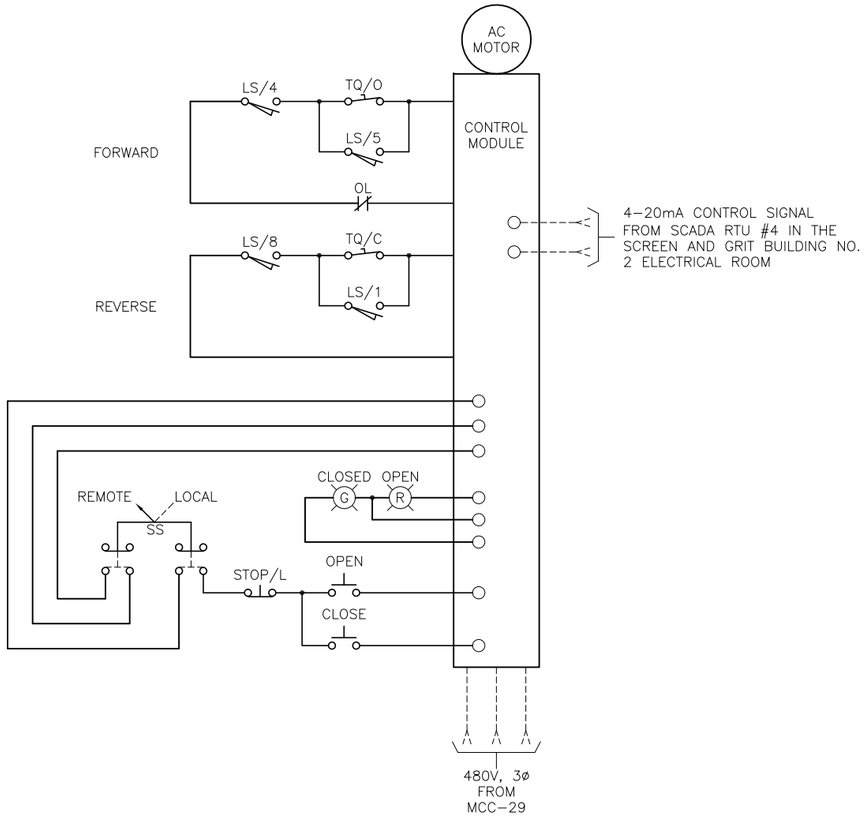

FLOW CONTROL VALVE
JC–2–SG–1
(SIMILAR FOR JC–2–SG–2 AND JC–2–SG–4)

TYPICAL LIMIT SWITCH CONTACT DEVELOPMENT FOR MOTORIZED FLOW CONTROL VALVE OPERATIONS

ROTOR NO.	CONTACT NO.	OPERATOR POSITION			CONTACT FUNCTION
		FULL OPEN	INTER–MEDIATE	FULL CLOSED	
1	1	X	— — —	— — —	BYPASS CIRCUIT
	2	X	— — —	— — —	AUXILIARY
	3	— — —	X	X	INDICATOR LIGHT
	4	— — —	X	X	FORWARD (OPEN LIMIT)
2	5	— — —	— — —	X	BYPASS CIRCUIT
	6	— — —	— — —	X	AUXILIARY
	7	X	X	— — —	INDICATOR LIGHT
	8	X	X	— — —	REVERSE (CLOSED) LIMIT
3	9	X	X	— — —	AUXILIARY
	10	X	X	— — —	AUXILIARY
	11	— — —	— — —	X	AUXILIARY
	12	— — —	— — —	X	AUXILIARY
4	13	— — —	X	X	AUXILIARY
	14	— — —	X	X	AUXILIARY
	15	X	— — —	— — —	AUXILIARY
	16	X	— — —	— — —	AUXILIARY

TQ/C – CLOSING TORQUE SWITCH

TQ/O – OPENING TORQUE SWITCH

X INDICATES CONTACT CLOSED

— — — INDICATES CONTACT OPEN

TRICON CONSULTING ENGINEERS
777 S. Harbour Island Blvd,
Suite 350
Tampa, FL 33602
813.227.9190
Certificate of Authorization No. 8363

JOB No.	231900542
DESIGNED	TDT
DRAWN	JLH
CHECKED	TDT
DATE	8/2019

No.	DATE	BY	APP	REVISION DESCRIPTION

SCALE: AS SHOWN

City of Tampa Wastewater Department

HOWARD F. CURREN AWTP
SLUICE GATE AND FLOW METER
REPLACEMENT

JC–2–SG–1, JC–2–SG–2 AND JC–2–SG–4 CONTROL SCHEMATIC

TIMOTHY THOMAS, P.E. No. 47079

SHEET NUMBER 23

FILE: 231900542E01

CONDUIT AND CABLE SCHEDULE

CONDUIT No.	SIZE	NUMBER OF CONDUCTORS/SIZE	FROM	TO	REMARKS
21M33	4"	3-#6 + 1-#8 GND & 6:2/C-#16 TW SHD	MCC-21	ELECTRICAL ROOM PULL BOX	4" CONDUIT IS EXISTING TO BE REUSED AFTER CLEANING, PROVIDE NEW CONDUCTORS. NOTE: CONDUIT INCLUDES CONDUCTORS FOR 21N8A (SIX 2/C-#16 TW SHD).
21M33A	4"	3-#6 + 1-#8 GND & 6:2/C-#16 TW SHD	ELECTRICAL ROOM PULL BOX	METER VAULT NO. 2 J.B.	4" CONDUIT IS EXISTING TO BE REUSED AFTER CLEANING, PROVIDE NEW CONDUCTORS. NOTE: CONDUIT INCLUDES CONDUCTORS FOR 21N8B (SIX 2/C-#16 TW SHD).
21M33B	1-1/4"	3-#6 + 1-#8 GND	METER VAULT NO. 2 J.B.	J.B. NEAR JC-2-SG-1	1-1/4" CONDUIT IS EXISTING TO BE REUSED AFTER CLEANING, PROVIDE NEW CONDUCTORS.
21M33C	3/4"	3-#12 + 1-#12 GND	J.B. NEAR JC-2-SG-1	DISC SW AT JC-2-SG-1	3/4" CONDUIT IS EXISTING TO BE REUSED AFTER CLEANING, PROVIDE NEW CONDUCTORS.
21M33D	3/4"	3-#12 + 1-#12 GND	DISC SW AT JC-2-SG-1	JC-2-SG-1	PROVIDE NEW CONDUCTORS AND NEW 3/4" NON-METALLIC FLEXIBLE CONDUIT CONNECTION TO JC-2-SG-1.
21M33E	1-1/4"	3-#6 + 1-#8 GND	J.B. NEAR JC-2-SG-1	J.B. NEAR JC-2-SG-2	1-1/4" CONDUIT IS EXISTING TO BE REUSED AFTER CLEANING, PROVIDE NEW CONDUCTORS.
21M33F	3/4"	3-#10 + 1-#10 GND	J.B. NEAR JC-2-SG-2	DISC SW AT JC-2-SG-2	3/4" CONDUIT IS EXISTING TO BE REUSED AFTER CLEANING, PROVIDE NEW CONDUCTORS.
21M33G	3/4"	3-#12 + 1-#12 GND	DISC SW AT JC-2-SG-2	JC-2-SG-2	PROVIDE NEW CONDUCTORS AND NEW 3/4" NON-METALLIC FLEXIBLE CONDUIT CONNECTION TO JC-2-SG-2.
21M33H	1-1/4"	3-#6 + 1-#8 GND	J.B. NEAR JC-2-SG-2	J.B. NEAR JC-2-SG-4	1-1/4" CONDUIT IS EXISTING TO BE REUSED AFTER CLEANING, PROVIDE NEW CONDUCTORS.
21M33I	3/4"	3-#12 + 1-#12 GND	J.B. NEAR JC-2-SG-4	DISC SW AT JC-2-SG-4	3/4" CONDUIT IS EXISTING TO BE REUSED AFTER CLEANING, PROVIDE NEW CONDUCTORS.
21M33J	3/4"	3-#12 + 1-#12 GND	DISC SW AT JC-2-SG-4	JC-2-SG-4	PROVIDE NEW CONDUCTORS AND NEW 3/4" NON-METALLIC FLEXIBLE CONDUIT CONNECTION TO JC-2-SG-2.
2N8	4"	SIX (6) 2/C-#16 TWISTED SHIELDED	RTU NO. 4	MCC-21	4" CONDUIT IS EXISTING TO BE REUSED AFTER CLEANING, PROVIDE NEW CONDUCTORS. THREE 2/C-#16 TW SHD FOR SLUICE GATES, THREE 2/C-#16 TW SHD FM'S
2N8A	4"	SIX (6) 2/C-#16 TWISTED SHIELDED	MCC-21	ELECTRICAL ROOM PULL BOX	4" CONDUIT IS EXISTING TO BE REUSED AFTER CLEANING, PROVIDE NEW CONDUCTORS. 3 2/C-#16 TW SHD FOR SLUICE GATES, 3 2/C-#16 TW SHD FM'S
2N8B	1"	THREE (3) 2/C-#16 TWISTED SHIELDED	METER VAULT NO. 2 J.B.	WEST J.B. AT JC NO. 2	1" CONDUIT IS EXISTING TO BE REUSED AFTER CLEANING, PROVIDE NEW CONDUCTORS.
2N8C	1"	THREE (3) 2/C-#16 TWISTED SHIELDED	WEST J.B. AT JC NO. 2	J.B. NEAR JC-2-SG-1	1" CONDUIT IS EXISTING TO BE REUSED AFTER CLEANING, PROVIDE NEW CONDUCTORS.
2N8D	3/4"	ONE (1) 2/C-#16 TWISTED SHIELDED	J.B. NEAR JC-2-SG-1	JC-2-SG-1	PROVIDE NEW CONDUCTORS AND NEW 3/4" NON-METALLIC FLEXIBLE CONDUIT CONNECTION TO JC-2-SG-1.
2N8E	1"	TWO (2) 2/C-#16 TWISTED SHIELDED	J.B. NEAR JC-2-SG-1	J.B. NEAR JC-2-SG-2	1" CONDUIT IS EXISTING TO BE REUSED AFTER CLEANING, PROVIDE NEW CONDUCTORS.
2N8F	3/4"	ONE (1) 2/C-#16 TWISTED SHIELDED	J.B. NEAR JC-2-SG-2	JC-2-SG-2	PROVIDE NEW CONDUCTORS AND NEW 3/4" NON-METALLIC FLEXIBLE CONDUIT CONNECTION TO JC-2-SG-1.
2N8G	1"	ONE (1) 2/C-#16 TWISTED SHIELDED	J.B. NEAR JC-2-SG-2	J.B. NEAR JC-2-SG-4	1" CONDUIT IS EXISTING TO BE REUSED AFTER CLEANING, PROVIDE NEW CONDUCTORS.
2N8H	3/4"	ONE (1) 2/C-#16 TWISTED SHIELDED	J.B. NEAR JC-2-SG-4	JC-2-SG-4	PROVIDE NEW CONDUCTORS AND NEW 3/4" NON-METALLIC FLEXIBLE CONDUIT CONNECTION TO JC-2-SG-1.
21L1	3/4"	2-#12 + 1-#12 GND	PANELBOARD LP-21	ELECTRICAL ROOM PULL BOX	3/4" CONDUIT IS EXISTING TO BE REUSED AFTER CLEANING, PROVIDE NEW CONDUCTORS. CIRCUIT 18.
21L2	3/4"	2-#12 + 1-#12 GND	ELECTRICAL ROOM PULL BOX	METER VAULT NO. 2 J.B.	3/4" CONDUIT IS EXISTING TO BE REUSED AFTER CLEANING, PROVIDE NEW CONDUCTORS.
21L3	3/4"	2-#12 + 1-#12 GND	METER VAULT NO. 2 J.B.	J.B. NEAR MRC-1	3/4" CONDUIT IS EXISTING TO BE REUSED AFTER CLEANING, PROVIDE NEW CONDUCTORS.
21L4	3/4"	2-#12 + 1-#12 GND	J.B. NEAR MRC-1	MRC-1	PROVIDE NEW CONDUCTORS AND NEW 3/4" NON-METALLIC FLEXIBLE CONDUIT CONNECTION TO MRC-1.
21L5	3/4"	2-#12 + 1-#12 GND	J.B. NEAR MRC-1	J.B. NEAR MRC-2	3/4" CONDUIT IS EXISTING TO BE REUSED AFTER CLEANING, PROVIDE NEW CONDUCTORS.
21L6	3/4"	2-#12 + 1-#12 GND	J.B. NEAR MRC-2	MRC-2	PROVIDE NEW CONDUCTORS AND NEW 3/4" NON-METALLIC FLEXIBLE CONDUIT CONNECTION TO MRC-2.
21L7	3/4"	2-#12 + 1-#12 GND	J.B. NEAR MRC-2	J.B. NEAR MRC-4	3/4" CONDUIT IS EXISTING TO BE REUSED AFTER CLEANING, PROVIDE NEW CONDUCTORS.
21L8	3/4"	2-#12 + 1-#12 GND	J.B. NEAR MRC-4	MRC-4	PROVIDE NEW CONDUCTORS AND NEW 3/4" NON-METALLIC FLEXIBLE CONDUIT CONNECTION TO MRC-4.
2N9	1"	THREE (3) 2/C-#16 TWISTED SHIELDED	METER VAULT NO. 2 J.B.	J.B. NEAR MRC-1	1" CONDUIT IS EXISTING TO BE REUSED AFTER CLEANING, PROVIDE NEW CONDUCTORS.
2N9A	3/4"	ONE (1) 2/C-#16 TWISTED SHIELDED	J.B. NEAR MRC-1	MRC-1	PROVIDE NEW CONDUCTORS AND NEW 3/4" NON-METALLIC FLEXIBLE CONDUIT CONNECTION TO MRC-1.
2N9B	1"	TWO (2) 2/C-#16 TWISTED SHIELDED	J.B. NEAR MRC-1	J.B. NEAR MRC-2	1" CONDUIT IS EXISTING TO BE REUSED AFTER CLEANING, PROVIDE NEW CONDUCTORS.
2N9C	3/4"	ONE (1) 2/C-#16 TWISTED SHIELDED	J.B. NEAR MRC-2	MRC-2	PROVIDE NEW CONDUCTORS AND NEW 3/4" NON-METALLIC FLEXIBLE CONDUIT CONNECTION TO MRC-2.
2N9D	1"	ONE (1) 2/C-#16 TWISTED SHIELDED	J.B. NEAR MRC-2	J.B. NEAR MRC-4	1" CONDUIT IS EXISTING TO BE REUSED AFTER CLEANING, PROVIDE NEW CONDUCTORS.
2N9E	3/4"	ONE (1) 2/C-#16 TWISTED SHIELDED	J.B. NEAR MRC-4	MRC-4	PROVIDE NEW CONDUCTORS AND NEW 3/4" NON-METALLIC FLEXIBLE CONDUIT CONNECTION TO MRC-4.

TRICON CONSULTING ENGINEERS
777 S. Harbour Island Blvd,
Suite 350
Tampa, FL 33602
813.227.9190
Certificate of Authorization No. 8363

JOB No.	231900542
DESIGNED	TDT
DRAWN	JLH
CHECKED	TDT
DATE	8/2019

No.	DATE	BY	APP	REVISION DESCRIPTION

SCALE
AS SHOWN

City of Tampa Wastewater Department
HOWARD F. CURREN AWTP
SLUICE GATE AND FLOW METER
REPLACEMENT

SCREEN & GRIT BLDG NO. 2,
CONDUIT AND CABLE
SCHEDULE

TIMOTHY THOMAS, P.E. No. 47079

SHEET NUMBER
24
FILE: 231900542E01

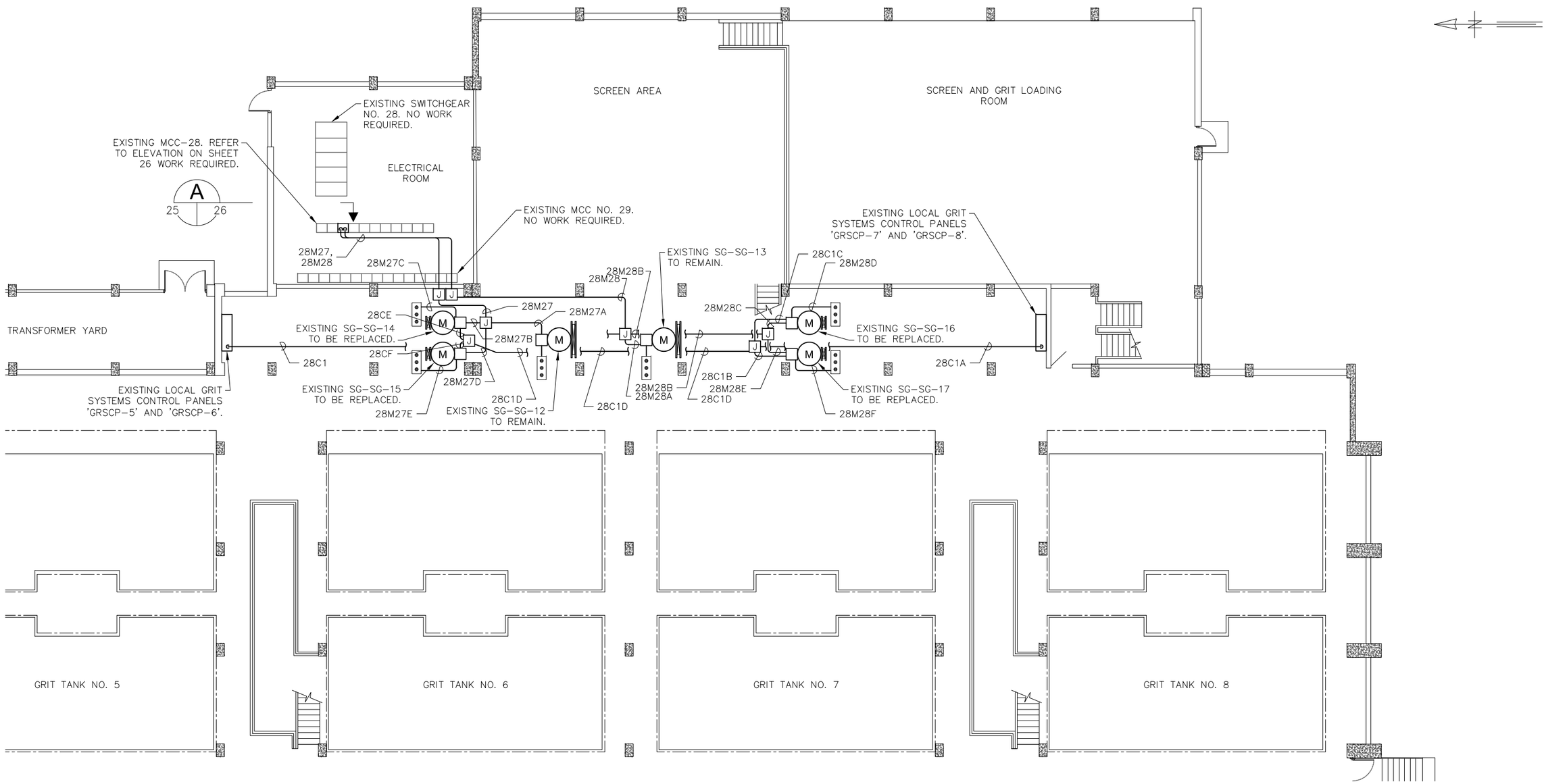

SCREEN AND GRIT BUILDING NO.1 (059) : PLAN ELEVATION 15'-6"

1
18 25

SCALE : 1/16" = 1'-0"

TRICON CONSULTING ENGINEERS	JOB No.	231900542					SCALE	City of Tampa Wastewater Department
777 S. Harbour Island Blvd, Suite 350 Tampa, FL 33602 813.227.9190 Certificate of Authorization No. 8363	DESIGNED	TDT						HOWARD F. CURREN AWTP SLUICE GATE AND FLOW METER REPLACEMENT
	DRAWN	JLH						
	CHECKED	TDT						
	DATE	8/2019	No.	DATE	BY	APP	REVISION DESCRIPTION	AS SHOWN

SCREEN & GRIT BUILDING NO. 1 PROPOSED ELECTRICAL PLAN ELEVATION 15'-6"

TIMOTHY THOMAS, P.E. No. 47079

SHEET NUMBER 25

FILE: 231900542E01

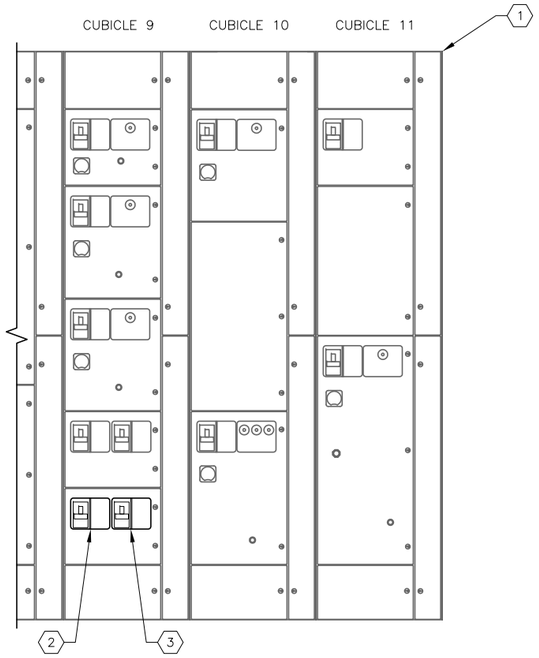

EXISTING MCC-28 PARTIAL FRONT ELEVATION

SCALE: NOT TO SCALE

A
25 26

KEYED NOTES:

1. EXISTING SCREEN AND GRIT BUILDING NO. 1, MCC-28.
2. EXISTING 480V, 3-POLE, 20A CIRCUIT BREAKER FOR SG-SG-12, SG-SG-14 AND SG-SG-15. CIRCUIT BREAKER SHALL BE REPLACED WITH 480V, 3-POLE, 40A CIRCUIT BREAKER. REFER ALSO TO SPECIFICATIONS.
3. EXISTING 480V, 3-POLE, 20A CIRCUIT BREAKER FOR SG-SG-13, SG-SG-16 AND SG-SG-17. CIRCUIT BREAKER SHALL BE REPLACED WITH 480V, 3-POLE, 40A CIRCUIT BREAKER. REFER ALSO TO SPECIFICATIONS.

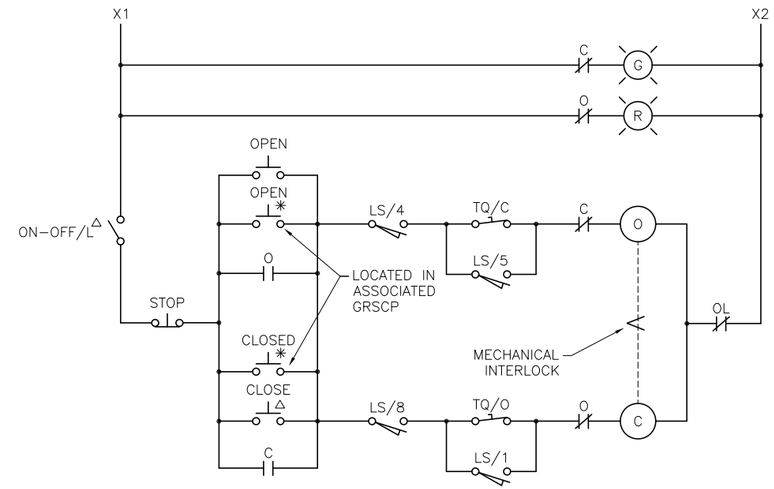

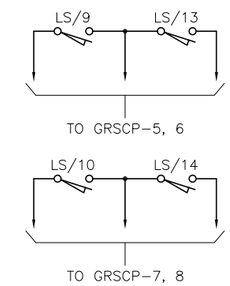

SLUICE GATE WIRING DIAGRAM

(TYPICAL FOR SG-SG-14 THRU SG-SG-17)

TYPICAL LIMIT SWITCH CONTACT DEVELOPMENT FOR MOTORIZED SLUICE GATE OPERATIONS

ROTOR NO.	CONTACT NO.	OPERATOR POSITION: FULL OPEN	OPERATOR POSITION: INTER-MEDIATE	OPERATOR POSITION: FULL CLOSED	CONTACT FUNCTION
1	1	X	— — —	— — —	BYPASS CIRCUIT
	2	X	— — —	— — —	AUXILIARY
	3	— — —	X	X	AUXILIARY
	4	— — —	X	X	FORWARD (OPEN LIMIT)
2	5	— — —	— — —	X	BYPASS CIRCUIT
	6	— — —	— — —	X	AUXILIARY
	7	X	X	— — —	AUXILIARY
	8	X	X	— — —	OPEN INDICATION LIGHT *
3	9	X	X	— — —	OPEN INDICATION LIGHT **
	10	X	X	— — —	REVERSE (CLOSED) LIMIT
	11	— — —	— — —	X	AUXILIARY
	12	— — —	— — —	X	AUXILIARY
4	13	— — —	X	X	CLOSED INDICATION LIGHT *
	14	— — —	X	X	CLOSED INDICATION LIGHT **
	15	X	— — —	— — —	AUXILIARY
	16	X	— — —	— — —	AUXILIARY

TQ/C – CLOSING TORQUE SWITCH

TQ/O – OPENING TORQUE SWITCH

X INDICATES CONTACT CLOSED

— — — INDICATES CONTACT OPEN

* INDICATING LIGHT IN GRSCP-5, 6

** INDICATING LIGHT IN GRSCP-7, 8

TRICON CONSULTING ENGINEERS
777 S. Harbour Island Blvd,
Suite 350
Tampa, FL 33602
813.227.9190
Certificate of Authorization No. 8363

JOB No.	231900542
DESIGNED	TDT
DRAWN	JLH
CHECKED	TDT
DATE	8/2019

No.	DATE	BY	APP	REVISION DESCRIPTION

SCALE: AS SHOWN

City of Tampa Wastewater Department

HOWARD F. CURREN AWTP
SLUICE GATE AND FLOW METER REPLACEMENT

EXISTING MCC-28 ELEVATION AND DETAILS

TIMOTHY THOMAS, P.E. No. 47079

SHEET NUMBER 26

FILE: 231900542E01

CONDUIT AND CABLE SCHEDULE

CONDUIT No.	SIZE	NUMBER OF CONDUCTORS/SIZE	FROM	TO	REMARKS
28M27	3/4"	3-#12 + 1-#10 GND	MCC 28	J.B. NEAR SG-SG-14	3/4" CONDUIT IS EXISTING TO BE REUSED AFTER CLEANING, PROVIDE NEW CONDUCTORS.
28M27A	3/4"	3-#8 + 1-#10 GND	J.B. NEAR SG-SG-14	SG-SG-12	3/4" CONDUIT IS EXISTING TO BE REUSED AFTER CLEANING, PROVIDE NEW CONDUCTORS. PROVIDE NEW EYS SEALS AND NEW SS EXPLOSIONPROOF FLEXIBLE CONDUIT.
28M27B	3/4"	3-#8 + 1-#10 GND	J.B. NEAR SG-SG-14	SG-SG-14	3/4" CONDUIT IS EXISTING TO BE REUSED AFTER CLEANING, PROVIDE NEW CONDUCTORS. PROVIDE NEW EYS SEALS AND NEW SS EXPLOSIONPROOF FLEXIBLE CONDUIT.
28M27C	3/4"	6-#14 + 1-#14 GND	SG-SG-14	LOCAL CONTROL STATION	3/4" CONDUIT IS EXISTING TO BE REUSED AFTER CLEANING, PROVIDE NEW CONDUCTORS. PROVIDE NEW EYS SEALS AND NEW SS EXPLOSIONPROOF FLEXIBLE CONDUIT.
28M27D	3/4"	3-#8 + 1-#10 GND	J.B. NEAR SG-SG-14	SG-SG-15	3/4" CONDUIT IS EXISTING TO BE REUSED AFTER CLEANING, PROVIDE NEW CONDUCTORS. PROVIDE NEW EYS SEALS AND NEW SS EXPLOSIONPROOF FLEXIBLE CONDUIT.
28M27E	3/4"	6-#14 + 1-#14 GND	SG-SG-14	LOCAL CONTROL STATION	3/4" CONDUIT IS EXISTING TO BE REUSED AFTER CLEANING, PROVIDE NEW CONDUCTORS. PROVIDE NEW EYS SEALS AND NEW SS EXPLOSIONPROOF FLEXIBLE CONDUIT.
28M28	3/4"	3-#8 + 1-#10 GND	MCC 28	J.B. NEAR SG-SG-13	3/4" CONDUIT IS EXISTING TO BE REUSED AFTER CLEANING, PROVIDE NEW CONDUCTORS.
28M28A	3/4"	3-#8 + 1-#10 GND	J.B. NEAR SG-SG-13	SG-SG-13	3/4" CONDUIT IS EXISTING TO BE REUSED AFTER CLEANING, PROVIDE NEW CONDUCTORS. PROVIDE NEW EYS SEALS AND NEW SS EXPLOSIONPROOF FLEXIBLE CONDUIT.
28M27B	3/4"	3-#8 + 1-#10 GND	J.B. NEAR SG-SG-13	J.B. NEAR SG-SG-16	3/4" CONDUIT IS EXISTING TO BE REUSED AFTER CLEANING, PROVIDE NEW CONDUCTORS.
28M27C	3/4"	3-#8 + 1-#10 GND	J.B. NEAR SG-SG-16	SG-SG-16	3/4" CONDUIT IS EXISTING TO BE REUSED AFTER CLEANING, PROVIDE NEW CONDUCTORS. PROVIDE NEW EYS SEALS AND NEW SS EXPLOSIONPROOF FLEXIBLE CONDUIT.
28M27D	3/4"	6-#14 + 1-#14 GND	SG-SG-16	LOCAL CONTROL STATION	3/4" CONDUIT IS EXISTING TO BE REUSED AFTER CLEANING, PROVIDE NEW CONDUCTORS. PROVIDE NEW EYS SEALS AND NEW SS EXPLOSIONPROOF FLEXIBLE CONDUIT.
28M27E	3/4"	3-#8 + 1-#10 GND	J.B. NEAR SG-SG-16	SG-SG-17	3/4" CONDUIT IS EXISTING TO BE REUSED AFTER CLEANING, PROVIDE NEW CONDUCTORS. PROVIDE NEW EYS SEALS AND NEW SS EXPLOSIONPROOF FLEXIBLE CONDUIT.
28M27F	3/4"	6-#14 + 1-#14 GND	SG-SG-17	LOCAL CONTROL STATION	3/4" CONDUIT IS EXISTING TO BE REUSED AFTER CLEANING, PROVIDE NEW CONDUCTORS. PROVIDE NEW EYS SEALS AND NEW SS EXPLOSIONPROOF FLEXIBLE CONDUIT.
28C1	1-1/4"	18-#14 + 1-#14 GND	GRSCP-5, 6	J.B. NEAR SG-SG-14	NO WORK REQUIRED.
28C1A	1-1/4"	18-#14 + 1-#14 GND	GRSCP-7, 8	J.B. NEAR SG-SG-17	NO WORK REQUIRED.
28C1B	1"	9-#14 + 1-#14 GND	J.B. NEAR SG-SG-17	SG-SG-17	1" CONDUIT IS EXISTING TO BE REUSED AFTER CLEANING, PROVIDE NEW CONDUCTORS. PROVIDE NEW EYS SEALS AND NEW SS EXPLOSIONPROOF FLEXIBLE CONDUIT.
28C1C	1"	9-#14 + 1-#14 GND	J.B. NEAR SG-SG-17	SG-SG-16	1" CONDUIT IS EXISTING TO BE REUSED AFTER CLEANING, PROVIDE NEW CONDUCTORS. PROVIDE NEW EYS SEALS AND NEW SS EXPLOSIONPROOF FLEXIBLE CONDUIT.
28C1D	1-1/4"	18-#14 + 1-#14 GND	J.B. NEAR SG-SG-17	J.B. NEAR SG-SG-14	NO WORK REQUIRED.
28C1E	1"	9-#14 + 1-#14 GND	J.B. NEAR SG-SG-14	SG-SG-14	1" CONDUIT IS EXISTING TO BE REUSED AFTER CLEANING, PROVIDE NEW CONDUCTORS. PROVIDE NEW EYS SEALS AND NEW SS EXPLOSIONPROOF FLEXIBLE CONDUIT.
28C1F	1"	9-#14 + 1-#14 GND	J.B. NEAR SG-SG-14	SG-SG-15	1" CONDUIT IS EXISTING TO BE REUSED AFTER CLEANING, PROVIDE NEW CONDUCTORS. PROVIDE NEW EYS SEALS AND NEW SS EXPLOSIONPROOF FLEXIBLE CONDUIT.

TRICON CONSULTING ENGINEERS
777 S. Harbour Island Blvd,
Suite 350
Tampa, FL 33602
813.227.9190
Certificate of Authorization No. 8363

JOB No.	231900542
DESIGNED	TDT
DRAWN	JLH
CHECKED	TDT
DATE	8/2019

No.	DATE	BY	APP	REVISION DESCRIPTION

SCALE: AS SHOWN

City of Tampa Wastewater Department
HOWARD F. CURREN AWTP
SLUICE GATE AND FLOW METER
REPLACEMENT

SCREEN & GRIT BUILDING NO. 1
CONDUIT AND
CABLE SCHEDULE

TIMOTHY THOMAS, P.E. No. 47079

SHEET NUMBER 27

FILE: 231900542E01

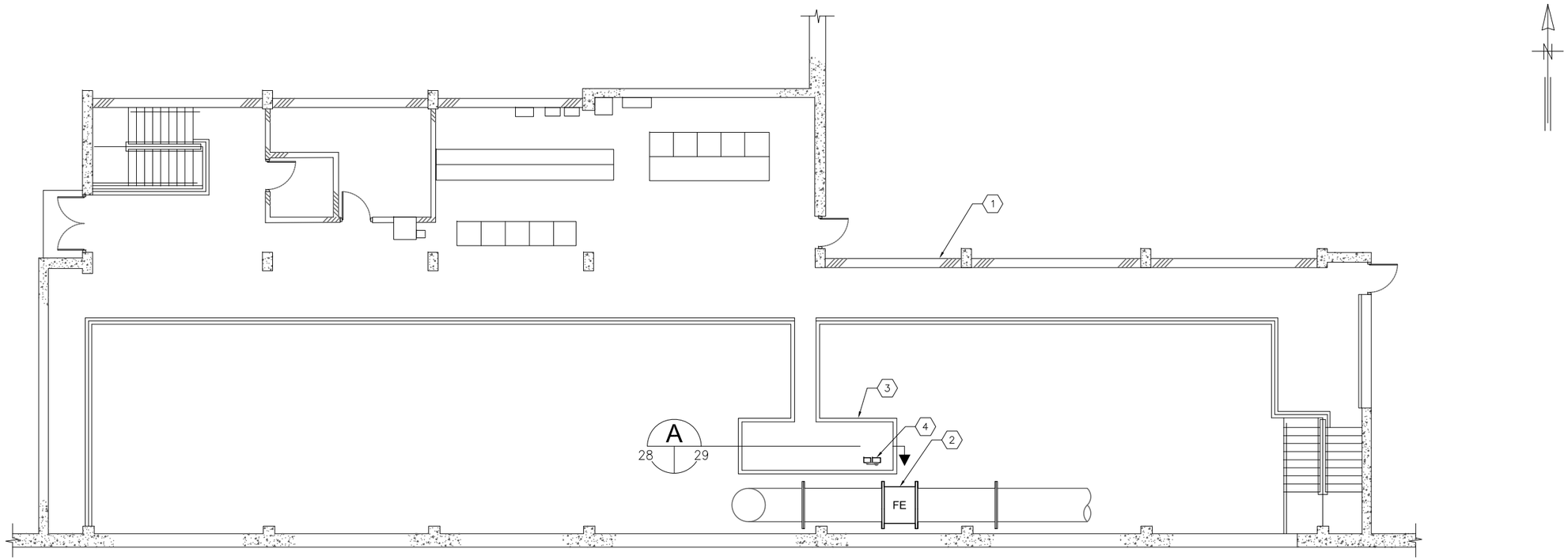

SLUDGE PUMPING STATION NO.2 (023) : PLAN ELEVATION 11'-0"

1
18 28

SCALE : 1/16" = 1'-0"

KEYED NOTES:

1. EXISTING SLUDGE PUMPING STATION NO. 2.
2. NEW 42" FLOW METER TO BE PROVIDED AND INSTALLED BY CONTRACTOR. REFER TO DETAILS ON SHEET 40.
3. EXISTING PLATFORM AT ELEVATION 11'-0".
4. CONTRACTOR TO REMOVE EXISTING MS-3 FLOW METER TRANSMITTER. REFER TO SHEET 29 FOR DETAILS. PROVIDE AND INSTALL PROPOSED MS-3 TRANSMITTER AS SHOWN ON SHEET 29.

TRICON CONSULTING ENGINEERS
777 S. Harbour Island Blvd,
Suite 350
Tampa, FL 33602
813.227.9190
Certificate of Authorization No. 8363

JOB No.	231900542
DESIGNED	TDT
DRAWN	JLH
CHECKED	TDT
DATE	8/2019

No.	DATE	BY	APP	REVISION DESCRIPTION

SCALE: AS SHOWN

City of Tampa Wastewater Department

HOWARD F. CURREN AWTP
SLUICE GATE AND FLOW METER
REPLACEMENT

SLUDGE PUMP BUILDING NO. 2
PROPOSED ELECTRICAL PLAN
ELEVATION 11'-0"

TIMOTHY THOMAS, P.E. No. 47079

SHEET NUMBER
28

FILE: 231900542E01

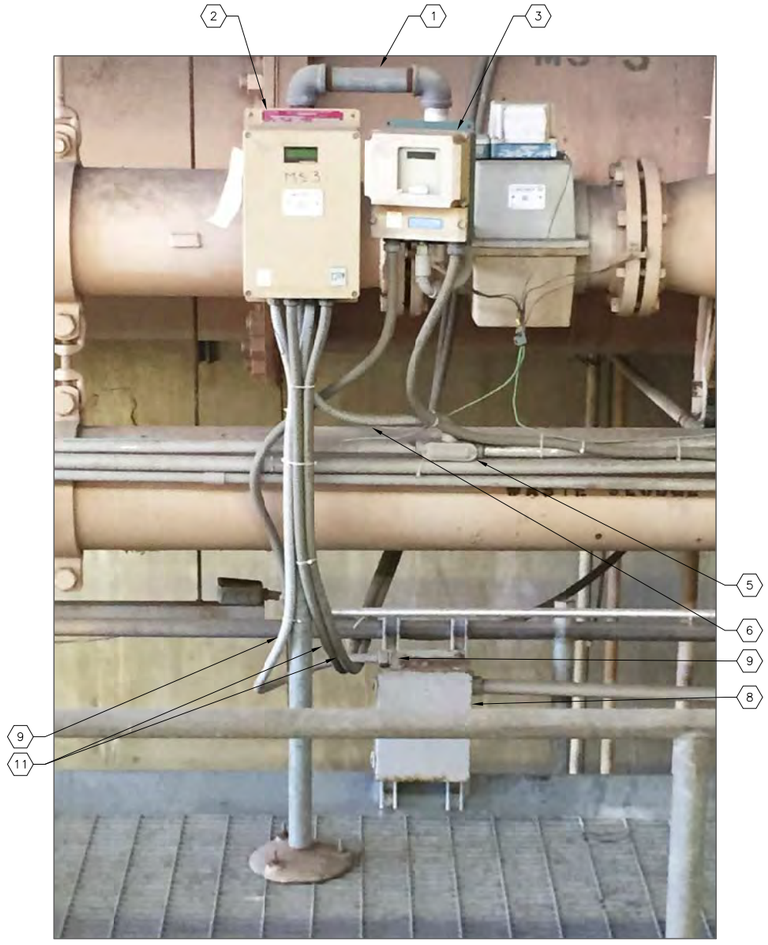

EXISTING REMOTE TRANSMITTER DETAILS (A 28/29)

SCALE: NOT TO SCALE

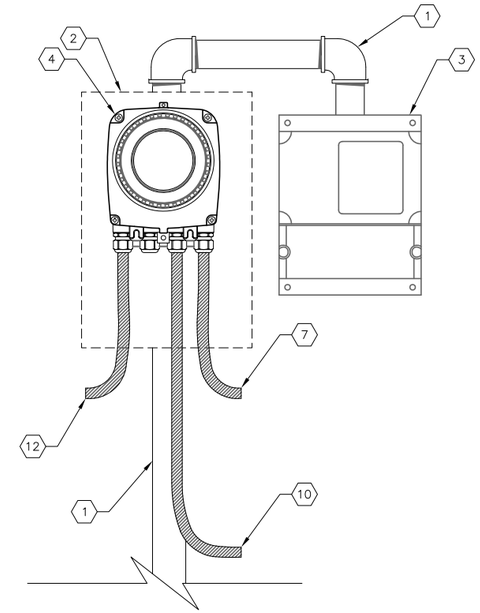

NEW REMOTE TRANSMITTER INSTALLATION DETAILS (A 28/29)

SCALE: NOT TO SCALE

GENERAL NOTES:

1. REFER TO SHEET 40 FOR TYPICAL REMOTE TRANSMITTER FIELD WIRING SCHEMATIC.
2. NEW CONDUCTORS FOR FLOW METER REMOTE TRANSMITTER SHALL BE SPLICED TO EXISTING CONDUCTORS WITH IDEAL PUSH-IN WIRE CONNECTORS, PART #30-1632.

KEYED NOTES:

1. CONTRACTOR SHALL REUSE EXISTING PIPE PEDESTAL.
2. CONTRACTOR REMOVE EXISTING MS-3 FLOW METER TRANSMITTER AND PROVIDE AND INSTALL NEW ABB WATER MASTER REMOTE TRANSMITTER.
3. EXISTING ELECTRONICS FOR MRC-14 TO REMAIN.
4. CONTRACTOR TO PROVIDE AND INSTALL ABB WATER MASTER REMOTE TRANSMITTER. MOUNT REMOTE TRANSMITTER TO EXISTING PIPE PEDESTAL WITH STAINLESS STEEL U-BOLTS AND CLAMPS.
5. EXISTING CONDUIT BODY CONTAINING CONDUCTORS FOR 120V AC POWER.
6. EXISTING CONDUIT AND CONDUCTORS FOR 120V AC POWER TO BE REPLACED. PROVIDE AND INSTALL 2-#12 + 1-#12 GND IN 3/4" LIQUID-TIGHT, NON-METALLIC, FLEXIBLE CONDUIT FROM REMOTE TRANSMITTER TO CONDUIT BODY. SPLICE INTO EXISTING 120V AC CIRCUIT WITH NEW WIRE NUTS.
7. PROVIDE AND INSTALL 2-#12 + 1-#12 GND IN 3/4" LIQUID-TIGHT, NON-METALLIC, FLEXIBLE CONDUIT FROM REMOTE TRANSMITTER TO CONDUIT BODY. SPLICE INTO EXISTING 120V AC CIRCUIT WITH NEW WIRE NUTS.
8. EXISTING JUNCTION BOX TO REMAIN AND BE REUSED.
9. EXISTING CONDUIT AND CONDUCTORS FOR REMOTE TRANSMITTER ANALOG OUTPUT TO BE REPLACED. PROVIDE AND INSTALL 2/C-#18 TWISTED SHIELDED IN 3/4" LIQUID-TIGHT, NON-METALLIC, FLEXIBLE CONDUIT FROM REMOTE TRANSMITTER TO EXISTING JUNCTION BOX. SPLICE INTO EXISTING CONDUCTORS WITH NEW IDEAL PUSH-IN WIRE CONNECTORS. PART #30-1632. TOTAL OF THREE (3) REQUIRED.
10. PROVIDE AND INSTALL 2/C-#18 TWISTED SHIELDED IN 3/4" LIQUID-TIGHT, NON-METALLIC, FLEXIBLE CONDUIT FROM REMOTE TRANSMITTER TO EXISTING JUNCTION BOX. SPLICE INTO EXISTING CONDUCTORS WITH NEW IDEAL PUSH-IN WIRE CONNECTORS. PART #30-1632. TOTAL OF THREE (3) REQUIRED.
11. EXISTING CONDUIT/CONDUCTORS TO EXISTING FLOW ELEMENT TO BE REMOVED.
12. PROVIDE AND INSTALL 3/4" LIQUID-TIGHT, NON-METALLIC, FLEXIBLE CONDUIT FOR MANUFACTURER SUPPLIED SENSOR CABLE. ALL SLACK SENSOR CABLE SHALL BE LOOPED AT FLOW METER ELEMENT AND SECURED WITH NYLON TIE-WRAPS.

TRICON CONSULTING ENGINEERS
777 S. Harbour Island Blvd, Suite 350
Tampa, FL 33602
813.227.9190
Certificate of Authorization No. 8363

JOB No.	231900542
DESIGNED	TDT
DRAWN	JLH
CHECKED	TDT
DATE	8/2019

No.	DATE	BY	APP	REVISION DESCRIPTION

SCALE: AS SHOWN

City of Tampa Wastewater Department
HOWARD F. CURREN AWTP
SLUICE GATE AND FLOW METER REPLACEMENT

SLUDGE PUMP BUILDING NO. 2
REMOTE FLOW TRANSMITTER DETAILS

TIMOTHY THOMAS, P.E. No. 47079

SHEET NUMBER 29

FILE: 231900542E01

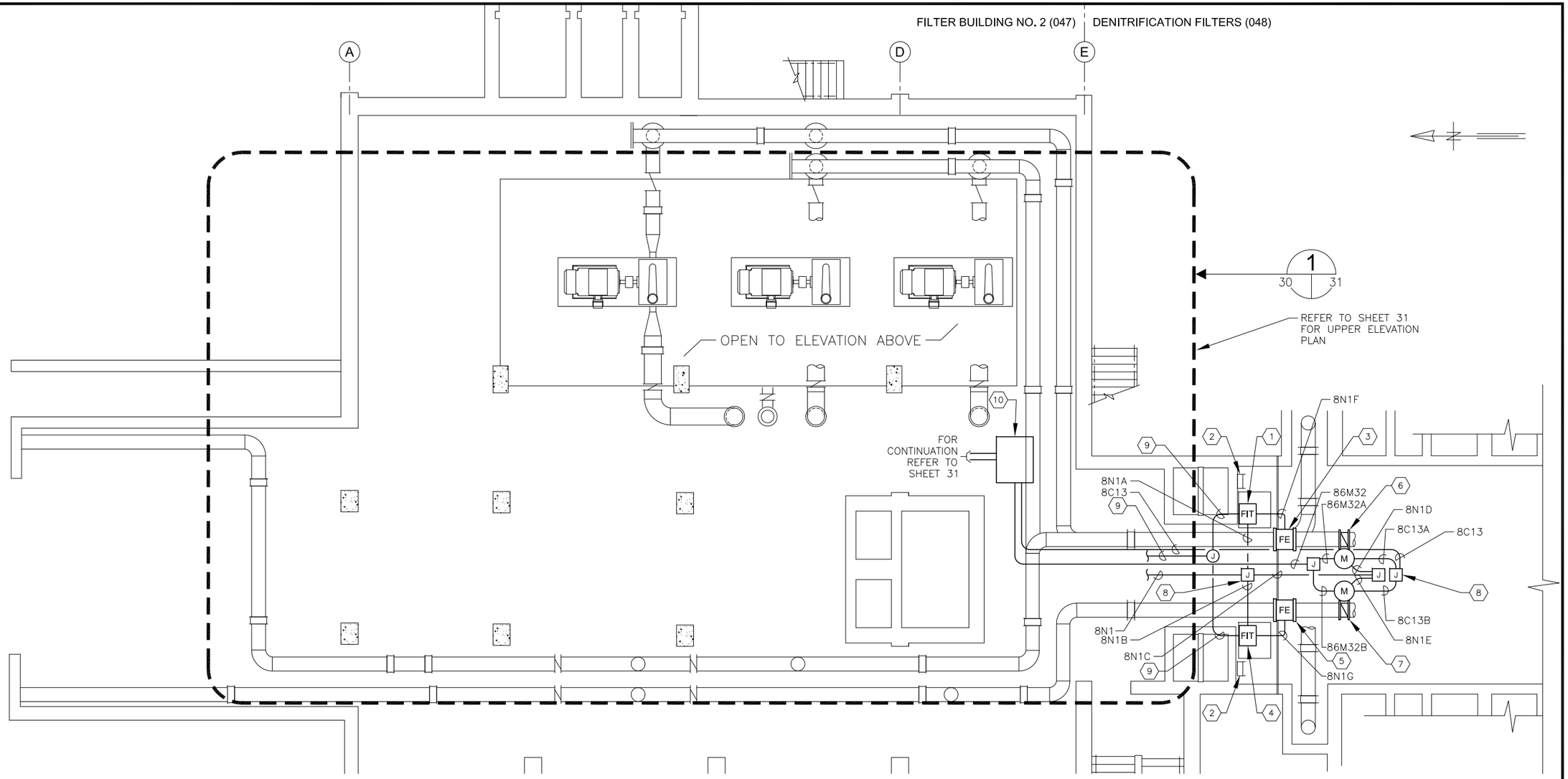

FILTER BUILDING NO.2 (047) : PLAN ELEVATION 4'-0"

1
18 30

SCALE : 3/32" = 1'-0"

KEYED NOTES:

1. EXISTING FLOW METER TRANSMITTER (FIT-53) LOCATED ON ELEVATED PLATFORM. EXISTING FLOW TRANSMITTER TO BE REPLACED. REFER TO DETAIL ON SHEET 33.
2. EXISTING LADDER TO FIT PLATFORM.
3. EXISTING FLOW METER ELEMENT (FE-53) TO BE REPLACED. REFER ALSO TO MECHANICAL DRAWINGS.
4. EXISTING FLOW METER TRANSMITTER (FIT-54) LOCATED ON ELEVATED PLATFORM. EXISTING FLOW TRANSMITTER TO BE REPLACED. REFER TO DETAIL ON SHEET 33.
5. EXISTING FLOW METER ELEMENT (FE-54) TO BE REPLACED. REFER ALSO TO MECHANICAL DRAWINGS.
6. EXISTING MOTOR OPERATED GATE VALVE (BWFCV-53) PROVIDED AND INSTALLED BY MECHANICAL CONTRACTOR. REFER ALSO TO MECHANICAL DRAWINGS.
7. EXISTING MOTOR OPERATED GATE VALVE (BWFCV-54) PROVIDED AND INSTALLED BY MECHANICAL CONTRACTOR. REFER ALSO TO MECHANICAL DRAWINGS.
8. EXISTING JUNCTION BOX SHALL BE REPLACED IF REQUIRED TO ACCOMMODATE SPLICING OF NEW CONDUCTORS.
9. EXISTING 2-#12 + 1-#12 GND IN 3/4" CONDUIT FROM PANELBOARD 'LP-86' FOR FLOW TRANSMITTER 120V AC POWER. CONTRACTOR SHALL REMOVE EXISTING CONDUCTORS, MANDREL CLEAN CONDUIT AND INSTALL NEW COPPER CONDUCTORS.
10. EXISTING PULL BOX. REFER ALSO TO KEYED NOTE #5 ON SHEET 31.

TRICON CONSULTING ENGINEERS
777 S. Harbour Island Blvd, Suite 350
Tampa, FL 33602
813.227.9190
Certificate of Authorization No. 8363

JOB No.	231900542					
DESIGNED	TDT					
DRAWN	JLH					
CHECKED	TDT					
DATE	8/2019	No.	DATE	BY	APP	REVISION DESCRIPTION

SCALE: AS SHOWN

City of Tampa Wastewater Department

HOWARD F. CURREN AWTP
SLUICE GATE AND FLOW METER REPLACEMENT

FILTER BUILDING NO. 2 PROPOSED ELECTRICAL PLAN ELEVATION 4'-0"

TIMOTHY THOMAS, P.E. No. 47079

SHEET NUMBER 30

FILE: 231900542E01

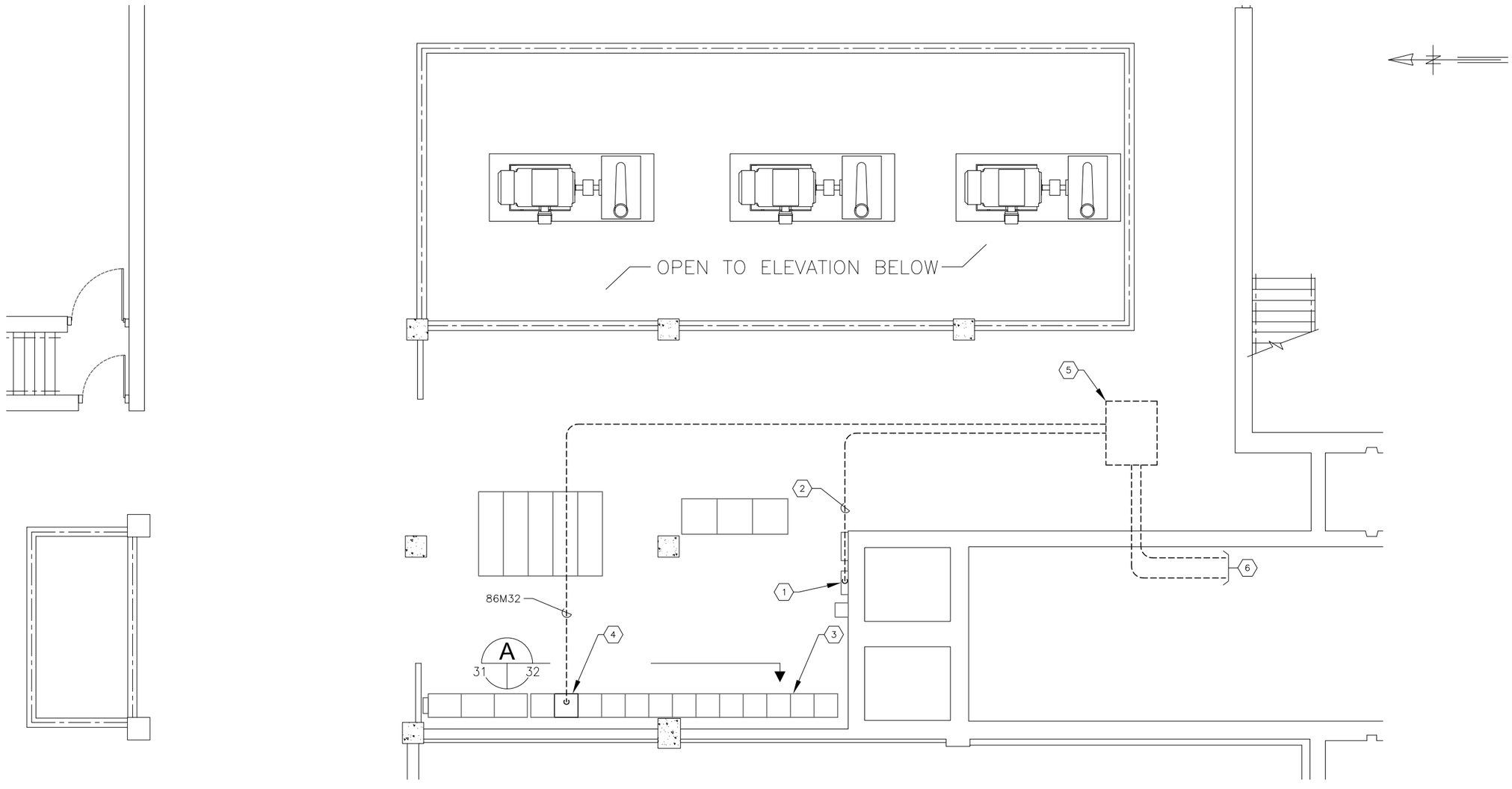

FILTER BUILDING NO.2 (047) : PLAN ELEVATION 11'-0"

SCALE : 3/32" = 1'-0"

1
30 31

KEYED NOTES:

1. EXISTING PANELBOARD 'LP-86'. CONTRACTOR TO REUSE EXISTING SINGLE-POLE CIRCUIT BREAKER FOR FLOW TRANSMITTER 120V AC POWER. CIRCUIT #13.
2. EXISTING 2-#12 + 1-#12 GND IN 3/4" CONDUIT FROM PANELBOARD 'LP-86' FOR FLOW TRANSMITTER 120V AC POWER. CONTRACTOR SHALL REMOVE EXISTING CONDUCTORS, MANDREL CLEAN CONDUIT AND INSTALL NEW COPPER CONDUCTORS.
3. EXISTING MOTOR CONTROL CENTER DESIGNATED 'MCC-86'.
4. CUBICLE 12 IN EXISTING MCC-86. REFER TO PARTIAL ELEVATION ON SHEET 32. CONTRACTOR SHALL REUSE EXISTING 20A CIRCUIT BREAKER DESIGNATED AS 'BACKWASH WATER FLOW CONTROL VALVES BWFCV-53 & 54'.
5. EXISTING PULL BOX LOCATED ON BOTTOM SIDE OF SLAB.
6. FOR CONTINUATION REFER TO SHEET 30

TRICON CONSULTING ENGINEERS
777 S. Harbour Island Blvd,
Suite 350
Tampa, FL 33602
813.227.9190
Certificate of Authorization No. 8363

JOB No.	231900542					
DESIGNED	TDT					
DRAWN	JLH					
CHECKED	TDT					
DATE	8/2019	No.	DATE	BY	APP	REVISION DESCRIPTION

SCALE: AS SHOWN

City of Tampa Wastewater Department

HOWARD F. CURREN AWTP
SLUICE GATE AND FLOW METER
REPLACEMENT

FILTER BUILDING NO. 2 PROPOSED ELECTRICAL PLAN ELEVATION 11'-0"

TIMOTHY THOMAS, P.E. No. 47079

SHEET NUMBER 31

FILE: 231900542E01

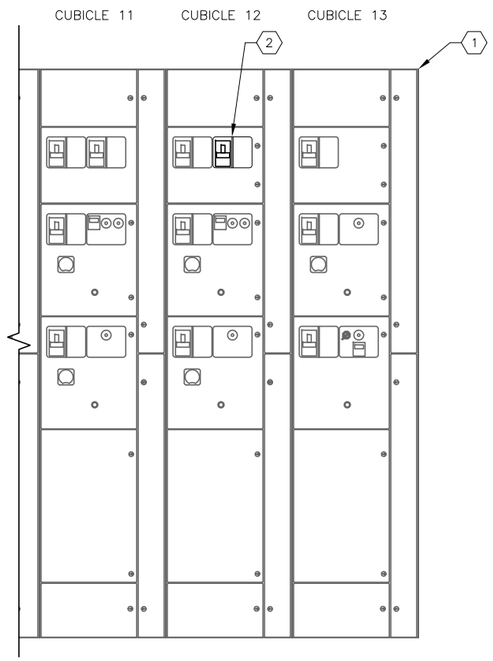

MCC-86 PARTIAL
FRONT ELEVATION

A
31 32

SCALE: NOT TO SCALE

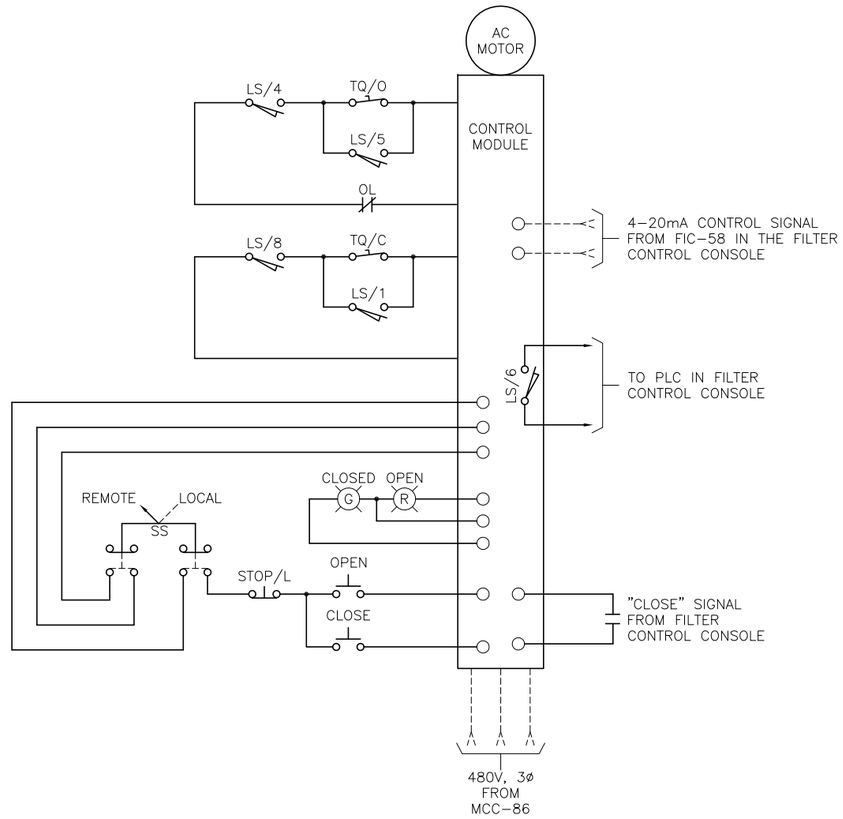

BACKWASH WATER FLOW CONTROL VALVE
BWFCV–53
(SIMILAR FOR BWFCV–54)

TYPICAL LIMIT SWITCH CONTACT DEVELOPMENT FOR MOTORIZED FLOW CONTROL VALVE OPERATIONS

ROTOR NO.	CONTACT NO.	OPERATOR POSITION			CONTACT FUNCTION
		FULL OPEN	INTER–MEDIATE	FULL CLOSED	
1	1	X	— — —	— — —	BYPASS CIRCUIT
	2	X	— — —	— — —	AUXILIARY
	3	— — —	X	X	INDICATOR LIGHT
	4	— — —	X	X	FORWARD (OPEN LIMIT)
2	5	— — —	— — —	X	BYPASS CIRCUIT
	6	— — —	— — —	X	AUXILIARY
	7	X	X	— — —	INDICATOR LIGHT
	8	X	X	— — —	REVERSE (CLOSED) LIMIT
3	9	X	X	— — —	AUXILIARY
	10	X	X	— — —	AUXILIARY
	11	— — —	— — —	X	AUXILIARY
	12	— — —	— — —	X	AUXILIARY
4	13	— — —	X	X	AUXILIARY
	14	— — —	X	X	AUXILIARY
	15	X	— — —	— — —	AUXILIARY
	16	X	— — —	— — —	AUXILIARY

TQ/C – CLOSING TORQUE SWITCH

TQ/O – OPENING TORQUE SWITCH

X INDICATES CONTACT CLOSED

— — — INDICATES CONTACT OPEN

KEYED NOTES:

1. EXISTING MOTOR CONTROL CENTER DESIGNATED 'MCC–86'.
2. CONTRACTOR SHALL REUSE EXISTING 3–POLE, 600V, 20A CIRCUIT BREAKER DESIGNATED AS 'BACKWASH WATER FLOW CONTROL VALVES BWFCV–53 & 54'.

TRICON CONSULTING ENGINEERS
777 S. Harbour Island Blvd,
Suite 350
Tampa, FL 33602
813.227.9190
Certificate of Authorization No. 8363

JOB No.	231900542
DESIGNED	TDT
DRAWN	JLH
CHECKED	TDT
DATE	8/2019

No.	DATE	BY	APP	REVISION DESCRIPTION

SCALE: AS SHOWN

City of Tampa Wastewater Department
HOWARD F. CURREN AWTP
SLUICE GATE AND FLOW METER REPLACEMENT

DENITRIFICATION FILTERS
ELECTRICAL DETAILS

TIMOTHY THOMAS, P.E. No. 47079

SHEET NUMBER 32

FILE: 231900542E01

CONDUIT AND CABLE SCHEDULE

CONDUIT No.	SIZE	NUMBER OF CONDUCTORS/SIZE	FROM	TO	REMARKS
86M32	3/4"	3-#12 + 1-#12 GND	MCC-86	J.B. NEAR BWFCV-53	3/4" CONDUIT IS EXISTING TO BE REUSED AFTER CLEANING, PROVIDE NEW CONDUCTORS.
86M32A	3/4"	3-#12 + 1-#12 GND	J.B. NEAR BWFCV-53	BWFCV-53	3/4" CONDUIT IS EXISTING TO BE REUSED AFTER CLEANING, PROVIDE NEW CONDUCTORS.
86M32B	3/4"	3-#12 + 1-#12 GND	J.B. NEAR BWFCV-53	BWFCV-54	3/4" CONDUIT IS EXISTING TO BE REUSED AFTER CLEANING, PROVIDE NEW CONDUCTORS.
8C13	1-1/4"	16-#12 + 1-#12 GND	FILTER CONTROL PANEL	J.B. NEAR BWFCV-53	NO WORK REQUIRED.
8C13A	3/4"	4-#12 + 1-#12 GND	J.B. NEAR BWFCV-53	BWFCV-53	3/4" CONDUIT IS EXISTING TO BE REUSED AFTER CLEANING, PROVIDE NEW CONDUCTORS AND NEW NON-METALLIC FLEXIBLE CONDUIT CONNECTION TO BWFCV-53.
8C13B	3/4"	4-#12 + 1-#12 GND	J.B. NEAR BWFCV-53	BWFCV-54	3/4" CONDUIT IS EXISTING TO BE REUSED AFTER CLEANING, PROVIDE NEW CONDUCTORS AND NEW NON-METALLIC FLEXIBLE CONDUIT CONNECTION TO BWFCV-54.
8N1	1-1/4"	8-#12 + 4-2/C-#16 TWSH + 1-#12 GND	FILTER CONTROL PANEL	J.B. NEAR FIT-53	NO WORK REQUIRED.
8N1A	1"	1-2/C-#16 TWSH	J.B. NEAR FIT-53	FIT-53	1" CONDUIT IS EXISTING TO BE REUSED AFTER CLEANING, PROVIDE NEW CONDUCTORS AND NEW NON-METALLIC FLEXIBLE CONDUIT CONNECTION TO FIT-53.
8N1B	1"	1-2/C-#16 TWSH	J.B. NEAR FIT-53	FIT-54	1" CONDUIT IS EXISTING TO BE REUSED AFTER CLEANING, PROVIDE NEW CONDUCTORS AND NEW NON-METALLIC FLEXIBLE CONDUIT CONNECTION TO FIT-54.
8N1C	1"	8-#12 + 2-2/C-#16 TWSH + 1-#12 GND	J.B. NEAR FIT-53	J.B. NEAR BWFCV-53	1" CONDUIT IS EXISTING TO BE REUSED AFTER CLEANING, PROVIDE NEW CONDUCTORS.
8N1D	1"	4-#12 + 2-2/C-#16 TWSH + 1-#12 GND	J.B. NEAR BWFCV-53	BWFCV-53	1" CONDUIT IS EXISTING TO BE REUSED AFTER CLEANING, PROVIDE NEW CONDUCTORS AND NEW NON-METALLIC FLEXIBLE CONDUIT CONNECTION TO BWFCV-53.
8N1E	1"	4-#12 + 2-2/C-#16 TWSH + 1-#12 GND	J.B. NEAR BWFCV-53	BWFCV-54	1" CONDUIT IS EXISTING TO BE REUSED AFTER CLEANING, PROVIDE NEW CONDUCTORS AND NEW NON-METALLIC FLEXIBLE CONDUIT CONNECTION TO BWFCV-54.
8N1F	3/4"	MANUFACTURER SUPPLIED CABLE	FIT-53 FLOW METER	FIT-53 FLOW METER TRANS	3/4" CONDUIT IS NEW WITH NEW CONDUCTORS SUPPLIED BY MANUFACTURER. PROVIDE NON-METALLIC FLEXIBLE CONDUIT CONNECTION TO FIT-53 TRANSMITTER.
8N1G	3/4"	MANUFACTURER SUPPLIED CABLE	FIT-54 FLOW METER	FIT-54 FLOW METER TRANS	3/4" CONDUIT IS NEW WITH NEW CONDUCTORS SUPPLIED BY MANUFACTURER. PROVIDE NON-METALLIC FLEXIBLE CONDUIT CONNECTION TO FIT-54 TRANSMITTER.

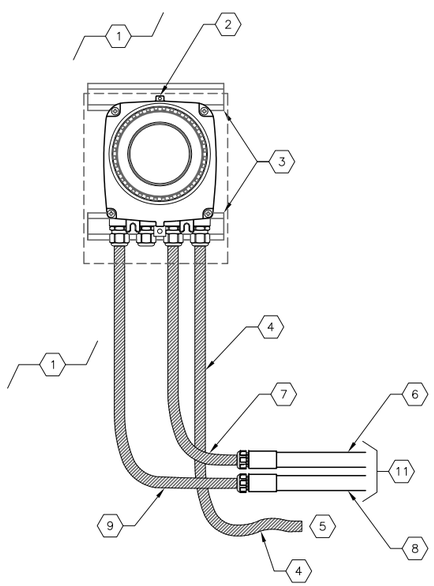

DENITRIFICATION FILTERS FLOW METER TRANSMITTER INSTALLATION DETAILS

SCALE: NOT TO SCALE

KEYED NOTES:

1. EXISTING WALL OF FLOW TRANSMITTER PLATFORM.
2. CONTRACTOR TO REMOVE EXISTING FLOW METER TRANSMITTER AND INSTALL NEW ABB WATER MASTER REMOTE TRANSMITTER.
3. PROVIDE AND INSTALL 1-5/8" X 7/8" STAINLESS STEEL UNISTRUT FOR TRANSMITTER MOUNTING.
4. PROVIDE AND INSTALL NEW 3/4" LIQUID-TIGHT, NON-METALLIC, FLEXIBLE CONDUIT FOR MANUFACTURER SUPPLIED SENSOR CABLE.
5. CONTINUE LIQUID-TIGHT, NON-METALLIC, FLEXIBLE CONDUIT AS NEAR AS POSSIBLE TO FLOW METER ELEMENT. ALL SLACK SENSOR CABLE SHALL BE LOOPED AT FLOW METER ELEMENT AND SECURED WITH NYLON TIE-WRAPS.
6. EXISTING CONDUIT (8N1A OR 8N1B PER LOCATION) TO BE REUSED.
7. PROVIDE AND INSTALL NEW 3/4" LIQUID-TIGHT, NON-METALLIC, FLEXIBLE CONDUIT FOR 8N1A OR 8N1B PER LOCATION.
8. EXISTING CONDUIT FOR 120V AC POWER (PANELBOARD 'LP-86' CIRCUIT 13) TO BE REUSED.
9. PROVIDE AND INSTALL NEW 3/4" LIQUID-TIGHT, NON-METALLIC, FLEXIBLE CONDUIT FOR 120V AC POWER.

GENERAL NOTES:

1. REFER TO SHEET 40 FOR TYPICAL REMOTE TRANSMITTER FIELD WIRING SCHEMATIC.
2. NEW CONDUCTORS REQUIRED FOR 8C13A AND 8C13B SHALL BE SPLICED TO EXISTING CONDUCTORS WITH WIRE NUTS.
3. NEW CONDUCTORS FOR 8N1A, 8N1B, 8N1D AND 8N1E SHALL BE SPLICED TO EXISTING CONDUCTORS WITH IDEAL PUSH-IN WIRE CONNECTORS, PART #30-1632.

TRICON CONSULTING ENGINEERS
777 S. Harbour Island Blvd, Suite 350
Tampa, FL 33602
813.227.9190
Certificate of Authorization No. 8363

JOB No.	231900542
DESIGNED	TDT
DRAWN	JLH
CHECKED	TDT
DATE	8/2019

No.	DATE	BY	APP	REVISION DESCRIPTION

SCALE: AS SHOWN

City of Tampa Wastewater Department
HOWARD F. CURREN AWTP
SLUICE GATE AND FLOW METER REPLACEMENT

DENITRIFICATION FILTERS CONDUIT AND CABLE SCHEDULE

TIMOTHY THOMAS, P.E. No. 47079

SHEET NUMBER 33

FILE: 231900542E01

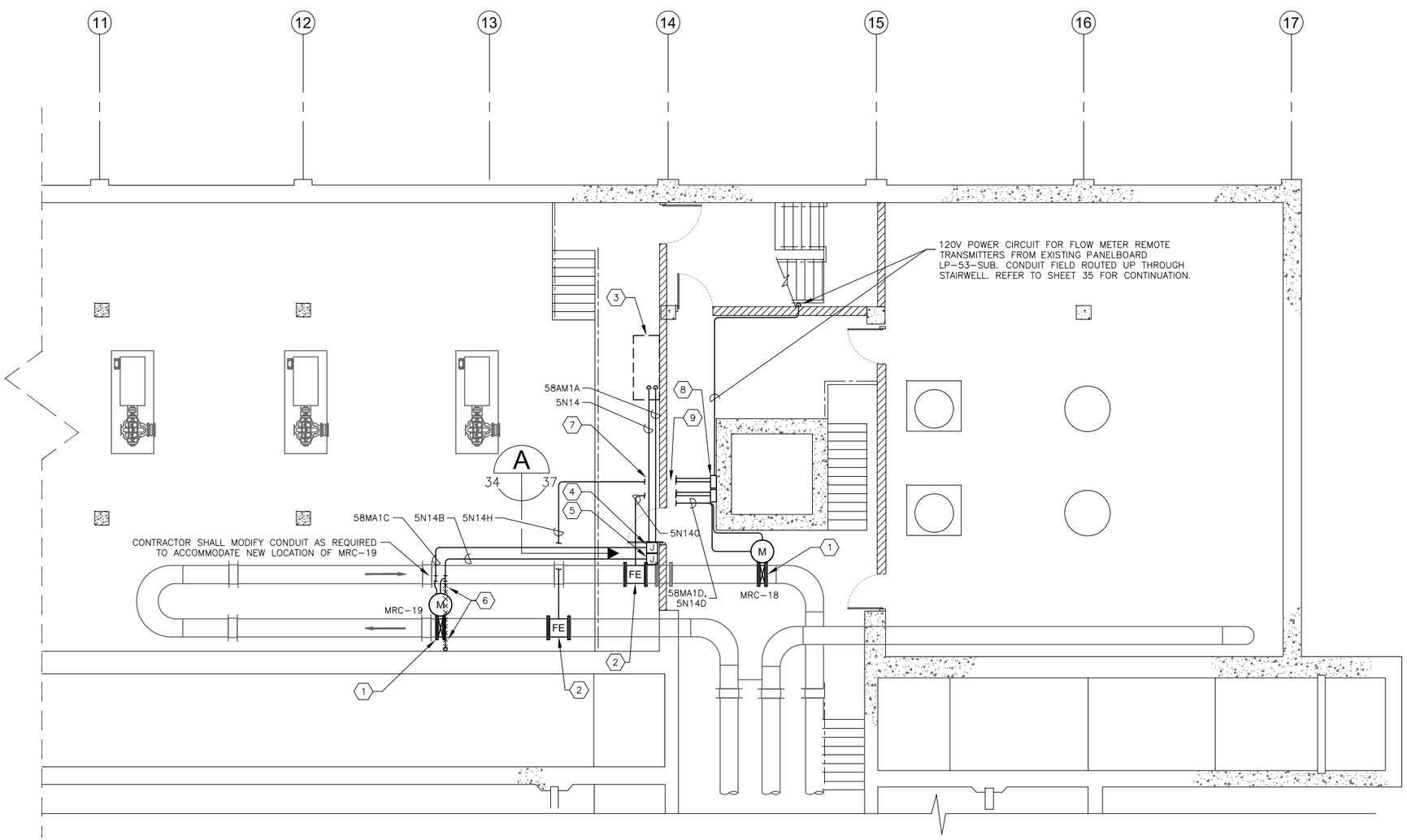

FILTER BUILDING NO.1 (015) : PLAN ELEVATION 3'-6"

1
18 34

SCALE : 3/32" = 1'-0"

KEYED NOTES:

1. PROPOSED 20" GATE VALVE AND ACTUATOR.
2. PROPOSED 20" FLOW METER.
3. EXISTING JUNCTION BOX LOCATED ON ELEVATION 11'-0".
4. EXISTING JUNCTION BOX FOR 480V POWER CONDUCTORS TO REMAIN AND BE REUSED. REFER TO DETAIL ON SHEET 37.
5. EXISTING JUNCTION BOX FOR ANALOG SIGNAL CONDUCTORS TO REMAIN AND BE REUSED. REFER TO DETAIL ON SHEET 37.
6. EXISTING CONDUIT AND CONDUCTORS TO EXISTING FLOW METER TO BE REMOVED.
7. CONTRACTOR TO PROVIDE AND INSTALL NEW 4" X 4" X 3" STAINLESS STEEL JUNCTION BOXES. JUNCTION BOXES NOT SHOWN FOR CLARITY. REFER TO DETAILS ON SHEET 37. HAMMOND EJ443S16 OR EQUAL.
8. REFER TO SHEET 39 FOR REMOTE FLOW METER TRANSMITTER MOUNTING DETAILS. LOCATION IS SHOWN DIAGRAMMATICALLY. COORDINATE MOUNTING LOCATION WITH AVAILABLE WALL SPACE AND EXISTING MECHANICAL PIPING.
9. CONTRACTOR TO PROVIDE AND INSTALL NEW 4" X 4" X 3" STAINLESS STEEL JUNCTION BOX. JUNCTION BOX NOT SHOWN FOR CLARITY. HAMMOND EJ443S16 OR EQUAL.

TRICON CONSULTING ENGINEERS
777 S. Harbour Island Blvd, Suite 350
Tampa, FL 33602
813.227.9190
Certificate of Authorization No. 8363

JOB No.	231900542					
DESIGNED	TDT					
DRAWN	JLH					
CHECKED	TDT					
DATE	8/2019	No.	DATE	BY	APP	REVISION DESCRIPTION

SCALE: AS SHOWN

City of Tampa Wastewater Department

HOWARD F. CURREN AWTP
SLUICE GATE AND FLOW METER REPLACEMENT

FILTER BUILDING NO. 1
PROPOSED ELECTRICAL PLAN
ELEVATION 3'-6"

TIMOTHY THOMAS, P.E. No. 47079

SHEET NUMBER 34

FILE: 231900542E01

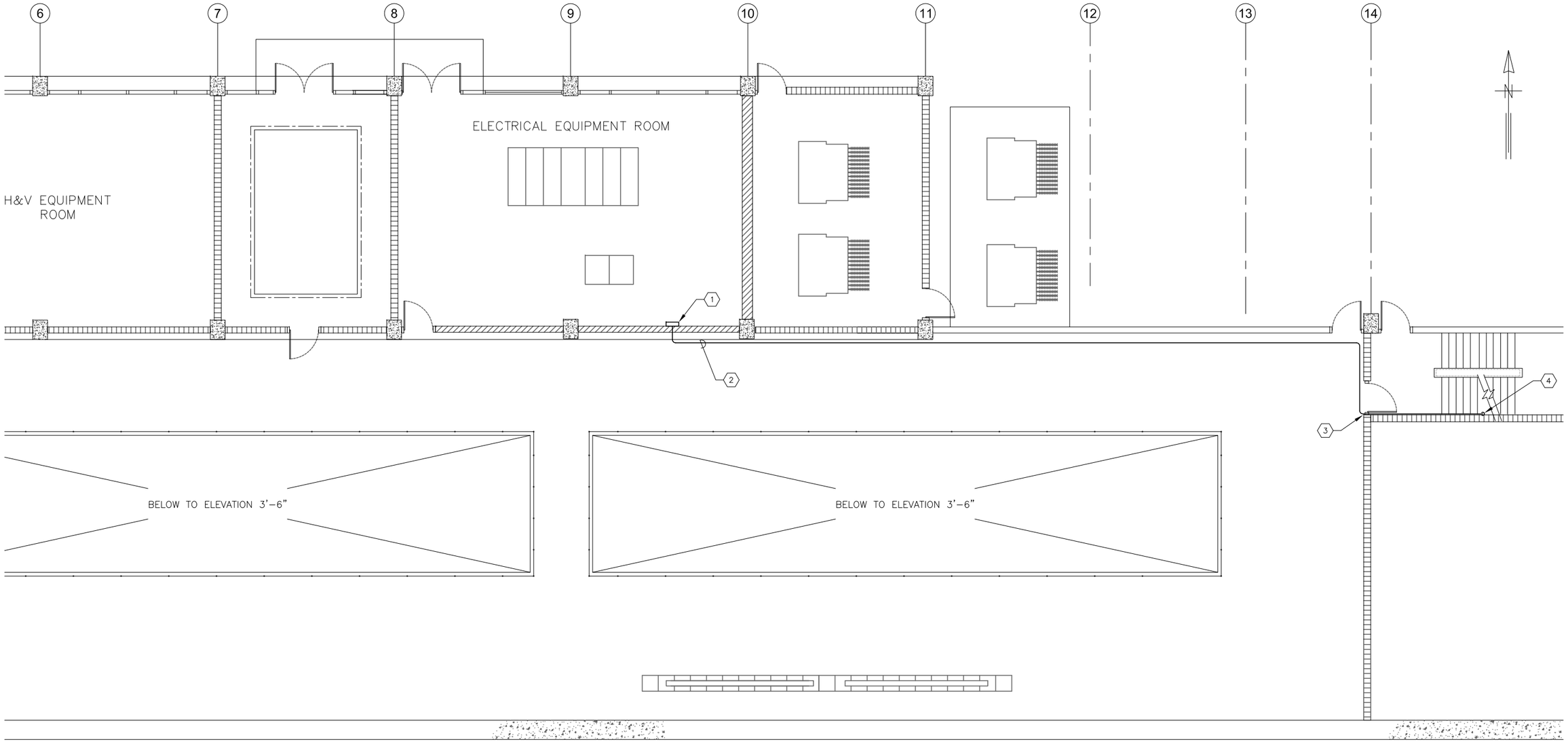

FILTER BUILDING NO.1 (015) : PLAN ELEVATION 11'-0"

SCALE : 3/32" = 1'-0"

KEYED NOTES:

1. EXISTING PANELBOARD LP-53-SUB. CONTRACTOR SHALL UTILIZE EXISTING SINGLE-POLE, 20A CIRCUIT BREAKER IN LP-53-SUB, CIRCUIT 8 FOR FLOW METER REMOTE TRANSMITTER 120V AC POWER.
2. PROVIDE 2-#12 + 1-#12 GND IN 3/4" CONDUIT FOR 120V AC POWER TO NEW FLOW METERS REMOTE TRANSMITTERS. REFER TO SHEET 34 FOR FLOW METER REMOTE TRANSMITTER LOCATION.
3. PENETRATE WALL AS REQUIRED.
4. FIELD ROUTE CONDUIT UP THROUGH STAIRWELL. REFER TO SHEET 34 FOR CONTINUATION UP TO ELEVATION 11'-0"

TRICON CONSULTING ENGINEERS
777 S. Harbour Island Blvd,
Suite 350
Tampa, FL 33602
813.227.9190
Certificate of Authorization No. 8363

JOB No.	231900542
DESIGNED	TDT
DRAWN	JLH
CHECKED	TDT
DATE	8/2019

No.	DATE	BY	APP	REVISION DESCRIPTION

SCALE

AS SHOWN

City of Tampa Wastewater Department

HOWARD F. CURREN AWTP
SLUICE GATE AND FLOW METER
REPLACEMENT

EXISTING CONDITIONS PLAN
ELEVATION 11'-0"

TIMOTHY THOMAS, P.E. No. 47079

SHEET NUMBER

35

FILE: 231900542E01

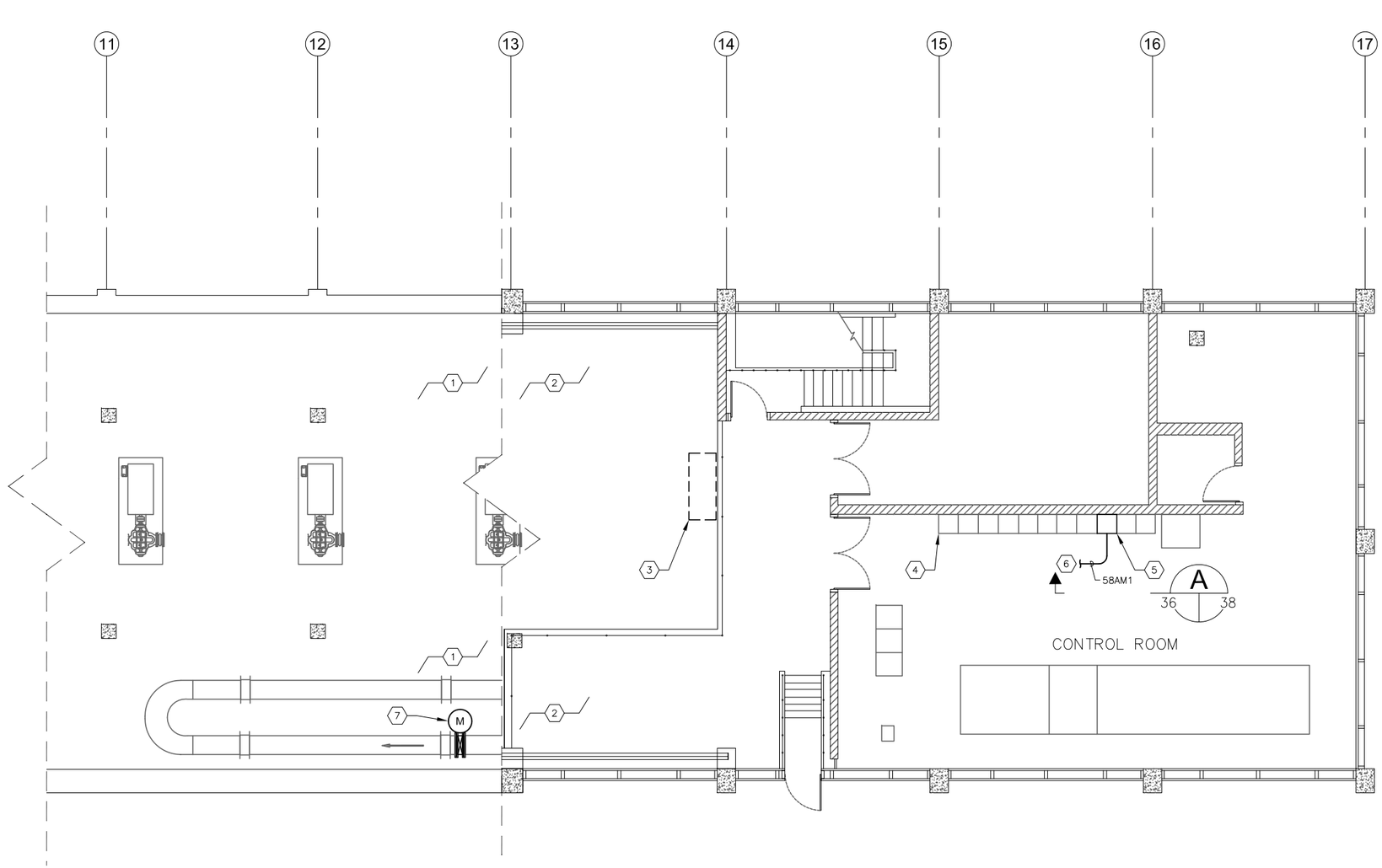

FILTER BUILDING NO.1 (015) : PLAN ELEVATION 23'-6"

SCALE : 3/32" = 1'-0"

KEYED NOTES:

1. EXISTING PLAN AT ELEVATION 3'-6".
2. EXISTING PLAN AT ELEVATION 23'-6".
3. EXISTING JUNCTION BOX LOCATED ON ELEVATION 11'-0". REFER ALSO TO SHEET 34.
4. EXISTING MOTOR CONTROL CENTER 'MCC-58A'.
5. CUBICLE 9 IN EXISTING MCC-58A. REFER TO PARTIAL ELEVATION ON SHEET 38. CONTRACTOR SHALL REUSE EXISTING 20A CIRCUIT BREAKERS DESIGNATED AS 'MRC-18' AND 'MRC-19'.
6. EXISTING CONDUIT CONTINUES (BENEATH FLOOR SLAB TO JUNCTION BOX SHOWN IN KEYED NOTE #3 ON THIS SHEET.
7. PROPOSED MRC-19 LOCATED AT ELEVATION 3'-6". REFER TO SHEET 34.

TRICON CONSULTING ENGINEERS
777 S. Harbour Island Blvd,
Suite 350
Tampa, FL 33602
813.227.9190
Certificate of Authorization No. 8363

JOB No.	231900542					
DESIGNED	TDT					
DRAWN	JLH					
CHECKED	TDT					
DATE	8/2019	No.	DATE	BY	APP	REVISION DESCRIPTION

SCALE: AS SHOWN

City of Tampa Wastewater Department

HOWARD F. CURREN AWTP
SLUICE GATE AND FLOW METER
REPLACEMENT

FILTER BUILDING NO. 1
PROPSED ELECTRICAL PLAN
ELEVATION 23'-6"

TIMOTHY THOMAS, P.E. No. 47079

SHEET NUMBER 36

FILE: 231900542E01

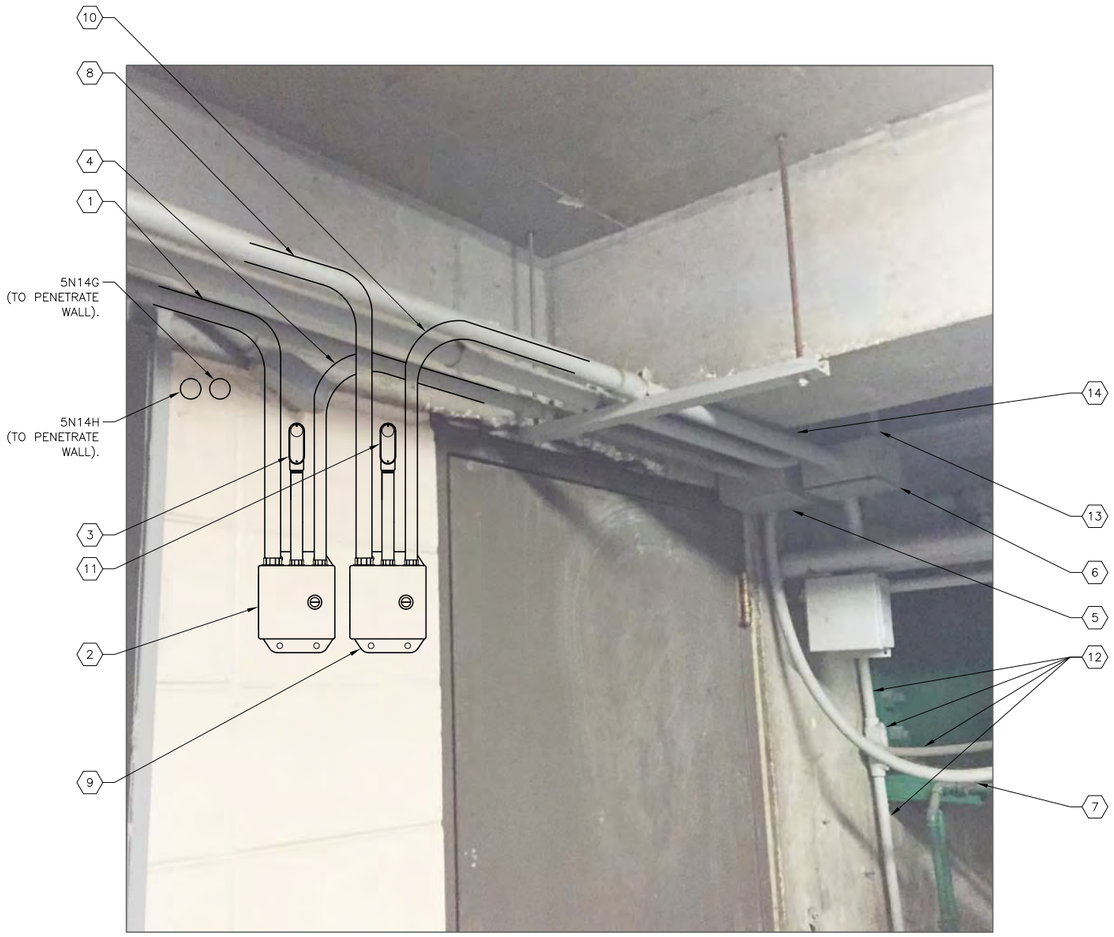

EXISTING JUNCTION BOX DETAILS (A 34/37)

SCALE: NOT TO SCALE

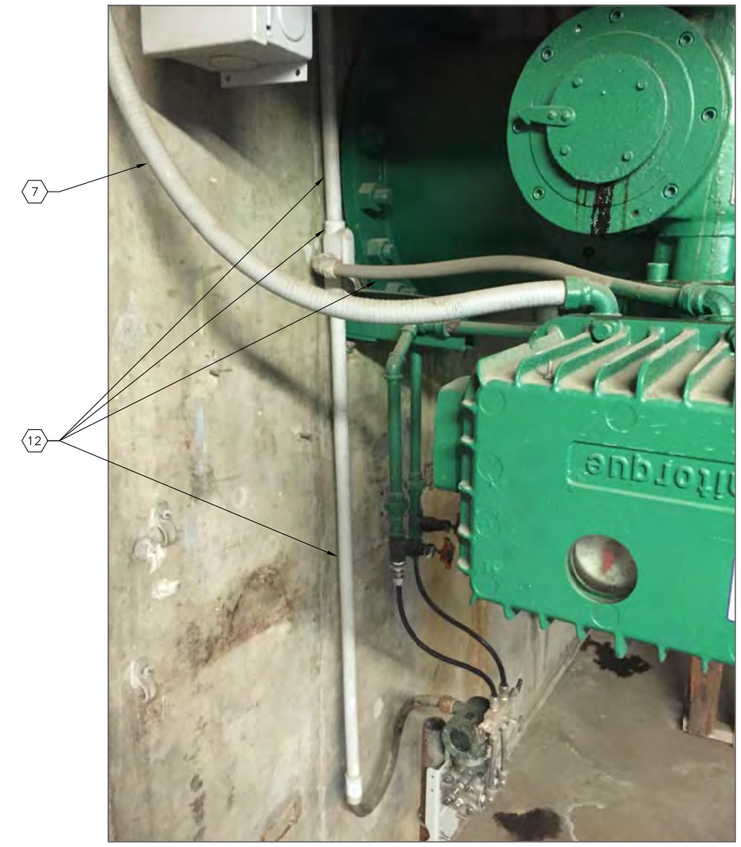

EXISTING CONNECTION DETAILS (A 34/37)

SCALE: NOT TO SCALE

KEYED NOTES:

1. EXISTING CONDUIT AND CONDUCTORS (58AM1A). CONDUIT TO BE INTERCEPTED AND REWORKED.
2. CONTRACTOR TO PROVIDE AND INSTALL NEW 4" X 4" X 3" STAINLESS STEEL JUNCTION BOX FOR 480V CONDUCTORS. HAMMOND EJ443S16 OR EQUAL.
3. NEW CONDUIT AND CONDUCTORS (58AM1D) TO MRC-18. PROVIDE CONDUIT L.B. FITTING TO ACCOMMODATE WALL PENETRATION.
4. NEW CONDUIT AND CONDUCTORS (58AM1B).
5. EXISTING JUNCTION BOX FOR 480V POWER CONDUCTORS TO REMAIN AND BE REUSED.
6. EXISTING JUNCTION BOX FOR ANALOG SIGNAL CONDUCTORS TO REMAIN AND BE REUSED.
7. EXISTING FLEXIBLE CONDUIT CONNECTION AND CONDUCTORS TO MRC-18 TO BE REMOVED.
8. EXISTING 1"C. WITH FOUR (4) 2/C-#16 TWISTED SHIELD CONDUCTORS (5N14). CONDUIT TO BE REWORKED IN A FASHION SIMILAR TO KEYED NOTE #1. CONDUCTORS SHALL BE PULLED BACK TO NEW JUNCTION BOX (KEYED NOTE #9) AND SLACK SHALL BE USED FOR SPLICING.
9. CONTRACTOR TO PROVIDE AND INSTALL NEW 4" X 4" X 3" STAINLESS STEEL JUNCTION BOX FOR ANALOG SIGNAL CONDUCTORS. HAMMOND EJ443S16 OR EQUAL.
10. NEW CONDUIT AND CONDUCTORS (5N14A) FOR MRC-19 CONTROL.
11. NEW CONDUIT AND CONDUCTORS (5N14C). PROVIDE CONDUIT L.B. FITTING TO ACCOMMODATE WALL PENETRATION.
12. EXISTING CONDUIT, CONDUIT BODY AND FLEXIBLE CONNECTIONS FOR ANALOG SIGNALS TO EXISTING FLOW METER AND EXISTING CONTROL VALVE TO BE REMOVED (EXISTING FLOW METER AND EXISTING CONTROL VALVE TO BE REMOVED BY CONTRACTOR).
13. EXISTING CONDUIT (EXISTS FROM TOP OF JUNCTION BOX) FOR ANALOG SIGNAL TO MRC-19 TO BE REUSED (5N14B).
14. EXISTING CONDUIT (EXISTS FROM TOP OF JUNCTION BOX) FOR 480V POWER TO MRC-19 TO BE REUSED (58AM1C).

TRICON CONSULTING ENGINEERS
777 S. Harbour Island Blvd,
Suite 350
Tampa, FL 33602
813.227.9190
Certificate of Authorization No. 8363

JOB No.	231900542					
DESIGNED	TDT					
DRAWN	JLH					
CHECKED	TDT					
DATE	8/2019	No.	DATE	BY	APP	REVISION DESCRIPTION

SCALE: AS SHOWN

City of Tampa Wastewater Department

HOWARD F. CURREN AWTP
SLUICE GATE AND FLOW METER
REPLACEMENT

FILTER BUILDING NO. 1 ELECTRICAL DETAILS (SHEET 1 OF 2)

TIMOTHY THOMAS, P.E. No. 47079

SHEET NUMBER 37

FILE: 231900542E01

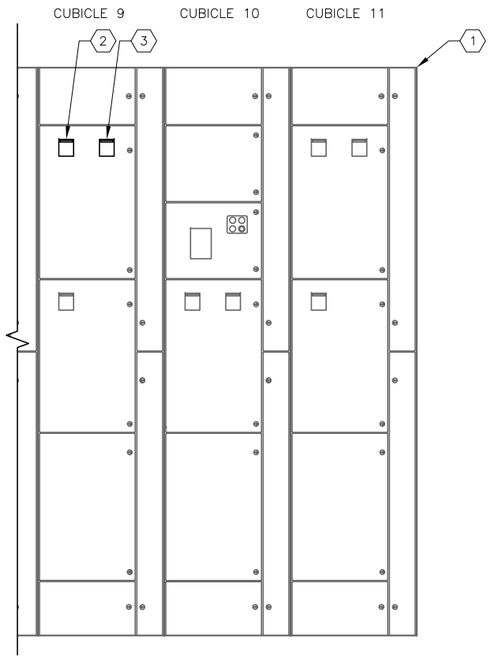

MCC-58A PARTIAL
FRONT ELEVATION

A
36 38

SCALE: NOT TO SCALE

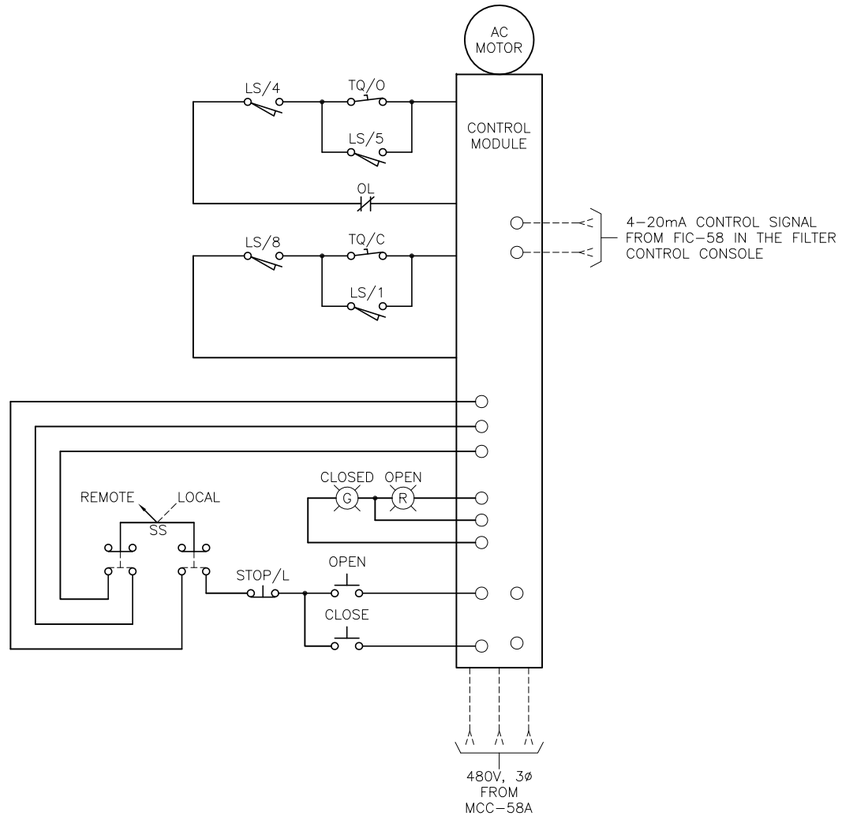

MOTORIZED RATE CONTROLLER 'MRC–18'
(SIMILAR FOR MRC–19)

TYPICAL LIMIT SWITCH CONTACT DEVELOPMENT FOR MOTORIZED FLOW CONTROL VALVE OPERATIONS

ROTOR NO.	CONTACT NO.	OPERATOR POSITION			CONTACT FUNCTION
		FULL OPEN	INTER–MEDIATE	FULL CLOSED	
1	1	X	— — —	— — —	BYPASS CIRCUIT
	2	X	— — —	— — —	AUXILIARY
	3	— — —	X	X	INDICATOR LIGHT
	4	— — —	X	X	FORWARD (OPEN LIMIT)
2	5	— — —	— — —	X	BYPASS CIRCUIT
	6	— — —	— — —	X	AUXILIARY
	7	X	X	— — —	INDICATOR LIGHT
	8	X	X	— — —	REVERSE (CLOSED) LIMIT
3	9	X	X	— — —	AUXILIARY
	10	X	X	— — —	AUXILIARY
	11	— — —	— — —	X	AUXILIARY
	12	— — —	— — —	X	AUXILIARY
4	13	— — —	X	X	AUXILIARY
	14	— — —	X	X	AUXILIARY
	15	X	— — —	— — —	AUXILIARY
	16	X	— — —	— — —	AUXILIARY

TQ/C – CLOSING TORQUE SWITCH

TQ/O – OPENING TORQUE SWITCH

X INDICATES CONTACT CLOSED

— — — INDICATES CONTACT OPEN

KEYED NOTES:

1. EXISTING MOTOR CONTROL CENTER DESIGNATED 'MCC–58A'.
2. CONTRACTOR SHALL REUSE EXISTING 3–POLE, 600V, 20A CIRCUIT BREAKER DESIGNATED AS 'MRC–18'.
3. CONTRACTOR SHALL REUSE EXISTING 3–POLE, 600V, 20A CIRCUIT BREAKER DESIGNATED AS 'MRC–19'.

TRICON CONSULTING ENGINEERS
777 S. Harbour Island Blvd,
Suite 350
Tampa, FL 33602
813.227.9190
Certificate of Authorization No. 8363

JOB No.	231900542
DESIGNED	TDT
DRAWN	JLH
CHECKED	TDT
DATE	8/2019

No.	DATE	BY	APP	REVISION DESCRIPTION

SCALE: AS SHOWN

City of Tampa Wastewater Department
HOWARD F. CURREN AWTP
SLUICE GATE AND FLOW METER REPLACEMENT

FILTER BUILDING NO. 1
ELECTRICAL DETAILS
(SHEET 2 OF 2)

TIMOTHY THOMAS, P.E. No. 47079

SHEET NUMBER 38

FILE: 231900542E01

CONDUIT AND CABLE SCHEDULE

CONDUIT No.	SIZE	NUMBER OF CONDUCTORS/SIZE	FROM	TO	REMARKS
58AM1	1"	6-#12 + 1-#12 GND	MCC-58A	J.B. AT LEVEL 11'-0"	1" CONDUIT IS EXISTING TO BE REUSED AFTER CLEANING, PROVIDE NEW CONDUCTORS.
58AM1A	1"	6-#12 + 1-#12 GND	J.B. AT LEVEL 11'-0"	NEW J.B. LEFT OF DOORWAY	1" CONDUIT IS EXISTING TO BE REUSED WITH MODIFICATIONS. REFER TO SHEET 37 FOR DETAILS. PROVIDE NEW CONDUCTORS.
58AM1B	1"	3-#12 + 1-#12 GND	NEW J.B. LEFT OF DOORWAY	EX J.B. RIGHT OF DOORWAY	1" CONDUIT IS EXISTING TO BE REUSED WITH MODIFICATIONS. REFER TO SHEET 37 FOR DETAILS. PROVIDE NEW CONDUCTORS.
58AM1C	3/4"	3-#12 + 1-#12 GND	EX J.B. RIGHT OF DOORWAY	MRC-19	3/4" CONDUIT IS EXISTING TO BE REUSED. PROVIDE NEW CONDUCTORS. PROVIDE NON-METALLIC FLEXIBLE CONDUIT CONNECTION TO MRC-19.
58AM1D	3/4"	3-#12 + 1-#12 GND	NEW J.B. LEFT OF DOORWAY	MRC-18	3/4" CONDUIT IS NEW WITH NEW CONDCUTORS. PROVIDE NEW NON-METALLIC FLEXIBLE CONDUIT CONNECTION TO MRC-18.
5N14	1"	4-2/C-#16 TWISTED SHIELDED	FBP-FS	NEW J.B. LEFT OF DOORWAY	CONDUIT AND TWISTED SHIELD CABLES SHALL BE REWORKED. CABLES SHALL BE SPLICED AND REUSED. REFER TO SHEET 37 FOR DETAILS.
5N14A	3/4"	1-2/C-#16 TWISTED SHIELDED	NEW J.B. LEFT OF DOORWAY	EX J.B. RIGHT OF DOORWAY	3/4" CONDUIT IS NEW WITH NEW CONDUCTORS. SPLICE INTO EXISTING CONDUCTORS WITH IDEAL PUSH-IN WIRE CONNECTORS, PART #30-1632.
5N14B	3/4"	1-2/C-#16 TWISTED SHIELDED	EX J.B. RIGHT OF DOORWAY	MRC-19	3/4" CONDUIT IS EXISTING TO BE REUSED AFTER CLEANING, PROVIDE NEW CONDUCTORS. PROVIDE NON-METALLIC FLEXIBLE CONDUIT CONNECTION TO MRC-18.
5N14C	3/4"	3-2/C-#16 TWISTED SHIELDED	NEW J.B. LEFT OF DOORWAY	NEW J.B. OTHER SIDE OF WALL	3/4" CONDUIT IS NEW WITH NEW CONDUCTORS. SPLICE INTO EXISTING CONDUCTORS WITH IDEAL PUSH-IN WIRE CONNECTORS, PART #30-1632.
5N14D	3/4"	1-2/C-#16 TWISTED SHIELDED	NEW J.B. ON WALL	MRC-18 FLOW METER	3/4" CONDUIT IS NEW WITH NEW CONDUCTORS. PROVIDE NON-METALLIC FLEXIBLE CONDUIT CONNECTION TO MRC-18 FLOW METER.
5N14E	3/4"	1-2/C-#16 TWISTED SHIELDED	NEW J.B. ON WALL	MRC-19 FLOW METER	3/4" CONDUIT IS NEW WITH NEW CONDUCTORS. PROVIDE NON-METALLIC FLEXIBLE CONDUIT CONNECTION TO MRC-19 FLOW METER.
5N14F	3/4"	1-2/C-#16 TWISTED SHIELDED	NEW J.B. ON WALL	MRC-18	3/4" CONDUIT IS NEW WITH NEW CONDUCTORS. PROVIDE NON-METALLIC FLEXIBLE CONDUIT CONNECTION TO MRC-18.
5N14G	3/4"	MANUFACTURER SUPPLIED CABLE	MRC-18 FLOW METER	MRC-18 FLOW METER TRANS	3/4" CONDUIT IS NEW WITH NEW CONDUCTORS SUPPLIED BY MANUFACTURER. PROVIDE NON-METALLIC FLEXIBLE CONDUIT CONNECTION TO MRC-18 TRANSMITTER.
5N14H	3/4"	MANUFACTURER SUPPLIED CABLE	MRC-19 FLOW METER	MRC-19 FLOW METER TRANS	3/4" CONDUIT IS NEW WITH NEW CONDUCTORS SUPPLIED BY MANUFACTURER. PROVIDE NON-METALLIC FLEXIBLE CONDUIT CONNECTION TO MRC-19 TRANSMITTER.

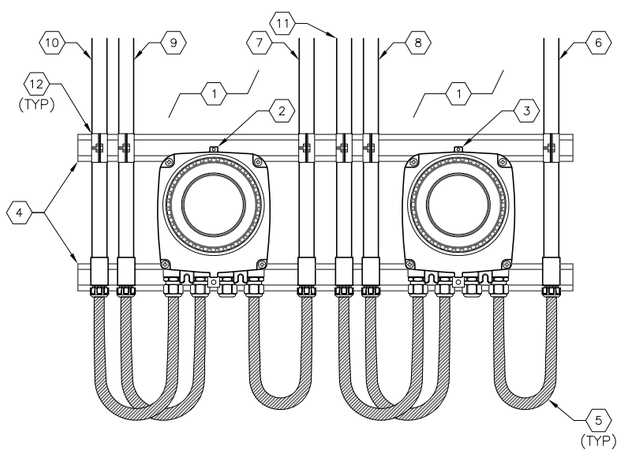

FILTER BUILDING NO. 1 FLOW METER TRANSMITTER INSTALLATION DETAILS

SCALE: NOT TO SCALE

KEYED NOTES:

1. EXISTING WALL IN FILTER BUILDING NO. 1.
2. PROVIDE AND INSTALL NEW ABB WATER MASTER REMOTE TRANSMITTER FOR MRC-19.
3. PROVIDE AND INSTALL NEW ABB WATER MASTER REMOTE TRANSMITTER FOR MRC-18.
4. PROVIDE AND INSTALL 1-5/8" X 7/8" STAINLESS STEEL UNISTRUT FOR TRANSMITTER MOUNTING.
5. PROVIDE AND INSTALL NEW 3/4" LIQUID-TIGHT, NON-METALLIC, FLEXIBLE CONDUIT. TYPICAL FOR ALL CONNECTIONS TO FLOW METER REMOTE TRANSMITTERS.
6. PROVIDE AND INSTALL NEW 3/4" CONDUIT FOR MANUFACTURER SUPPLIED SENSOR CABLE (5N14G). CONTINUE CONDUIT AS NEAR AS POSSIBLE TO FLOW METER ELEMENT. ALL SLACK SENSOR CABLE SHALL BE LOOPED AT FLOW METER ELEMENT AND SECURED WITH NYLON TIE-WRAPS.
7. PROVIDE AND INSTALL NEW 3/4" CONDUIT FOR MANUFACTURER SUPPLIED SENSOR CABLE (5N14H). CONTINUE CONDUIT AS NEAR AS POSSIBLE TO FLOW METER ELEMENT. ALL SLACK SENSOR CABLE SHALL BE LOOPED AT FLOW METER ELEMENT AND SECURED WITH NYLON TIE-WRAPS.
8. PROVIDE AND INSTALL 2/C-#16 TWISTED SHIELDED CABLE IN 3/4" CONDUIT, 5N14D.
9. PROVIDE AND INSTALL 2/C-#16 TWISTED SHIELDED CABLE IN 3/4" CONDUIT, 5N14E.
10. PROVIDE AND INSTALL 2-#12 +1-#12 GND IN 3/4" CONDUIT FOR 120V AC POWER. POWER FROM EXISTING PANELBOARD LP-53 SUB, CIRCUIT 8. REFER TO SHEETS 34 AND 35. CONTRACTOR TO PROVIDE AND INSTALL NEW 4" X 4" X 3" STAINLESS STEEL JUNCTION BOX FOR 120V POWER CONDUCTOR DISTRIBUTION TO FLOW METER REMOTE TRANSMITTERS. JUNCTION BOX NOT SHOWN FOR CLARITY.
11. PROVIDE AND INSTALL 2-#12 +1-#12 GND IN 3/4" CONDUIT FOR 120V AC POWER FROM JUNCTION BOX INDICATED IN KEYED NOTE #10.
12. PROVIDE AND INSTALL ALUMINUM CONDUIT CLAMP. TYPICAL.

GENERAL NOTES:

1. REFER TO SHEET 40 FOR TYPICAL REMOTE TRANSMITTER FIELD WIRING SCHEMATIC.
2. NEW CONDUCTORS FOR 5N14A, 5N14D, 5N14E AND 5N14F SHALL BE SPLICED TO EXISTING CONDUCTORS WITH IDEAL PUSH-IN WIRE CONNECTORS, PART #30-1632.

TRICON CONSULTING ENGINEERS
777 S. Harbour Island Blvd,
Suite 350
Tampa, FL 33602
813.227.9190
Certificate of Authorization No. 8363

JOB No.	231900542
DESIGNED	TDT
DRAWN	JLH
CHECKED	TDT
DATE	8/2019

No.	DATE	BY	APP	REVISION DESCRIPTION

SCALE: AS SHOWN

City of Tampa Wastewater Department
HOWARD F. CURREN AWTP
SLUICE GATE AND FLOW METER REPLACEMENT

FILTER BUILDING NO. 1
CONDUIT AND CABLE SCHEDULE

TIMOTHY THOMAS, P.E. No. 47079

SHEET NUMBER 39

FILE: 231900542E01

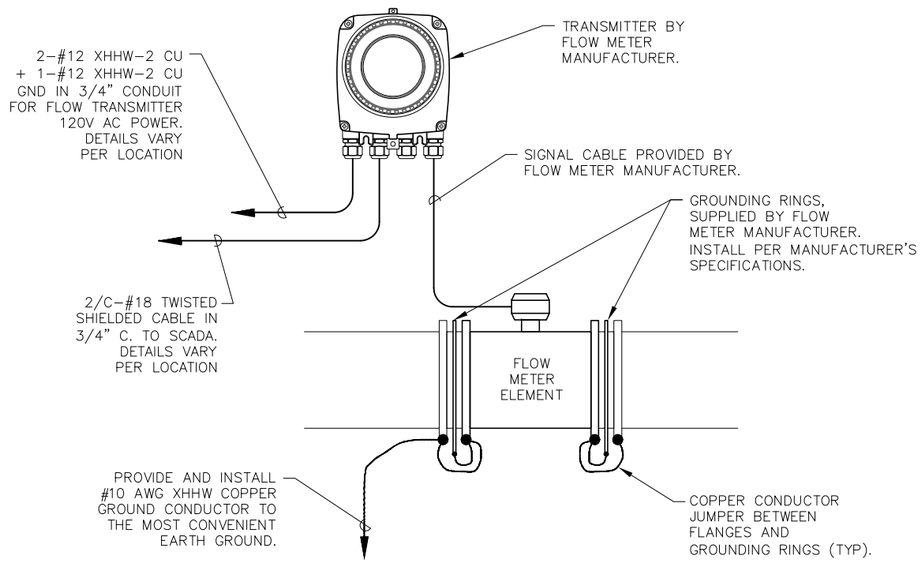

TYPICAL REMOTE TRANSMITTER FIELD WIRING SCHEMATIC

ALL WIRING TO BE VERIFIED/CONFIRMED WITH MANUFACTURER PRIOR TO INSTALLATION

TRICON CONSULTING ENGINEERS
777 S. Harbour Island Blvd,
Suite 350
Tampa, FL 33602
813.227.9190
Certificate of Authorization No. 8363

JOB No.	231900542					
DESIGNED	TDT					
DRAWN	JLH					
CHECKED	TDT					
DATE	8/2019	No.	DATE	BY	APP	REVISION DESCRIPTION

SCALE: AS SHOWN

City of Tampa Wastewater Department

HOWARD F. CURREN AWTP
SLUICE GATE AND FLOW METER
REPLACEMENT

TYPICAL FLOW METER
REMOTE TRANSMITTER WIRING
SCHEMATIC

TIMOTHY THOMAS, P.E. No. 47079

SHEET NUMBER 40

FILE: 231900542E01