The Enclosed Document Is Provided For Your Convenience.

Please Email ALL Questions:

MailTo:ContractAdministration@TampaGov.net

City of Tampa
Contract Administration Department
306 E. Jackson St. #280A4N
Tampa, FL 33602
(813)274-8456

LOCATION MAP

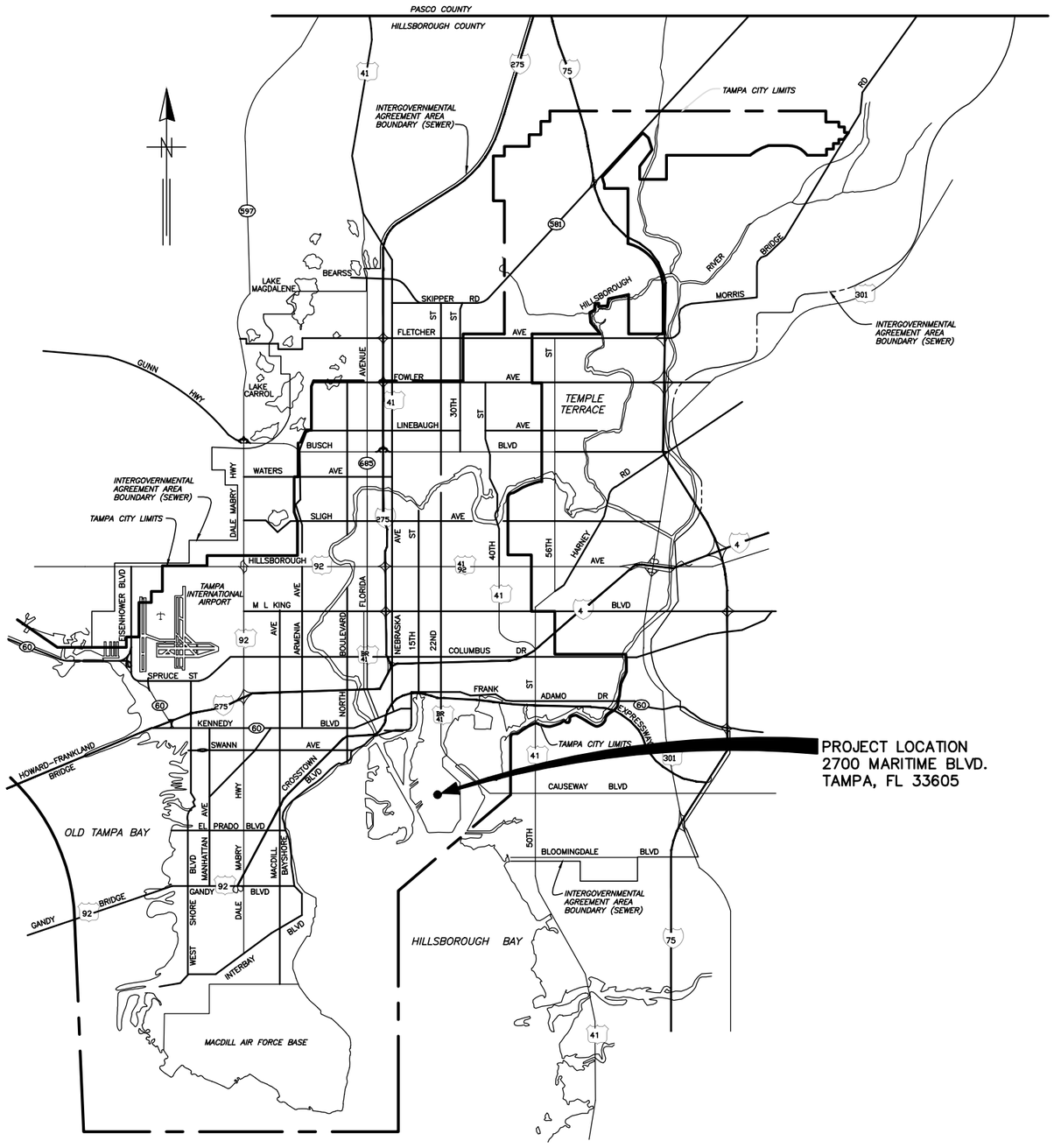

CITY of TAMPA

WASTEWATER DEPARTMENT

PLANS FOR

HFC AWTP SWITCHGEAR BUILDING PROTECTIVE RELAY REPLACEMENT

CONTRACT NUMBER 18-C-00034

AUGUST 13, 2018

ENGINEER OF RECORD:
BOB E. HALLMAN, P.E.
FLORIDA REGISTRATION NO. 20761

Engineering Design Technologies Corp.
P.O. Box 152403
Tampa, FL 33684-2403
813.289.8080
813.282.9184 FAX
engineering@edt1.com
Certificate of Authorization Number: 4795

CITY of TAMPA
WASTEWATER DEPARTMENT

HFC AWTP SWITCHGEAR BLDG.
PROTECTIVE RELAY REPLACEMENT

COVER

NO.	DATE	REVISIONS

DRAWN: STK
DESIGN: BEH
QC: BEH
DATE: 08/13/18

COVER

DRAWING INDEX

ELECTRICAL DRAWINGS

E-1 ELECTRICAL LEGEND & ABBREVIATIONS
E-2 ELECTRICAL GENERAL NOTES
E-3 ANSI DEVICE NUMBER LEGEND
E-4 HOWARD F. CURREN AWTP PLANT OVERVIEW
E-5 EXISTING SWITCHGEAR NO. 1 PLAN VIEW
E-6 EXISTING SWITCHGEAR NO. 1 ELECTRICAL ONE-LINE DIAGRAM (SHEET 1 OF 2)
E-7 EXISTING SWITCHGEAR NO. 1 ELECTRICAL ONE-LINE DIAGRAM (SHEET 2 OF 2)
E-8 EXISTING SWITCHGEAR NO. 1 DEMOLITION (SHEET 1 OF 4)
E-9 EXISTING SWITCHGEAR NO. 1 DEMOLITION (SHEET 2 OF 4)
E-10 EXISTING SWITCHGEAR NO. 1 DEMOLITION (SHEET 3 OF 4)
E-11 EXISTING SWITCHGEAR NO. 1 DEMOLITION (SHEET 4 OF 4)
E-12 EXISTING SWITCHGEAR NO. 1 MODIFICATIONS (SHEET 1 OF 4)
E-13 EXISTING SWITCHGEAR NO. 1 MODIFICATIONS (SHEET 2 OF 4)
E-14 EXISTING SWITCHGEAR NO. 1 MODIFICATIONS (SHEET 3 OF 4)
E-15 EXISTING SWITCHGEAR NO. 1 MODIFICATIONS (SHEET 4 OF 4)
E-16 EXISTING SWITCHGEAR NO. 1 1-52-1 MAIN GE 750 FEEDER MANAGEMENT RELAY WIRING DIAGRAM (SHEET 1 OF 3)
E-17 EXISTING SWITCHGEAR NO. 1 1-52-1 MAIN GE 750 FEEDER MANAGEMENT RELAY WIRING DIAGRAM (SHEET 2 OF 3)
E-18 EXISTING SWITCHGEAR NO. 1 1-52-1 MAIN GE 750 FEEDER MANAGEMENT RELAY WIRING DIAGRAM (SHEET 3 OF 3)
E-19 EXISTING SWITCHGEAR NO. 1 1-52-2 MAIN GE 750 FEEDER MANAGEMENT RELAY WIRING DIAGRAM (SHEET 1 OF 3)
E-20 EXISTING SWITCHGEAR NO. 1 1-52-2 MAIN GE 750 FEEDER MANAGEMENT RELAY WIRING DIAGRAM (SHEET 2 OF 3)
E-21 EXISTING SWITCHGEAR NO. 1 1-52-2 MAIN GE 750 FEEDER MANAGEMENT RELAY WIRING DIAGRAM (SHEET 3 OF 3)
E-22 EXISTING SWITCHGEAR NO. 1 1-52-TIE WIRING DIAGRAM
E-23 EXISTING SWITCHGEAR NO. 1 1-52-S1 & 1-52-S2 GE 750 FEEDER MANAGEMENT RELAY WIRING DIAGRAM
E-24 EXISTING SWITCHGEAR NO. 1 1-52-2A & 1-52-2B GE 750 FEEDER MANAGEMENT RELAY WIRING DIAGRAM
E-25 EXISTING SWITCHGEAR NO. 1 TYP. FEEDER BREAKER GE 750 FEEDER MANAGEMENT RELAY WIRING DIAGRAM
E-26 EXISTING SWITCHGEAR NO. 1 1-52-1 MAIN SEL-751A RELAY WIRING DIAGRAM (SHEET 1 OF 2)
E-27 EXISTING SWITCHGEAR NO. 1 1-52-1 MAIN SEL-751A RELAY WIRING DIAGRAM (SHEET 2 OF 2)
E-28 EXISTING SWITCHGEAR NO. 1 1-52-2 MAIN SEL-751A RELAY WIRING DIAGRAM (SHEET 1 OF 2)
E-29 EXISTING SWITCHGEAR NO. 1 1-52-2 MAIN SEL-751A RELAY WIRING DIAGRAM (SHEET 2 OF 2)
E-30 EXISTING SWITCHGEAR NO. 1 1-52-S1 & 1-52-S2 SEL-751A RELAY WIRING DIAGRAM

ELECTRICAL DRAWINGS (CONTINUED)

E-31 EXISTING SWITCHGEAR NO. 1 1-52-2A & 1-52-2B SEL-751A RELAY WIRING DIAGRAM (SHEET 1 OF 2)
E-32 EXISTING SWITCHGEAR NO. 1 1-52-2A & 1-52-2B SEL-751A RELAY WIRING DIAGRAM (SHEET 2 OF 2)
E-33 EXISTING SWITCHGEAR NO. 1 TYP. FEEDER BREAKER SEL 751 RELAY WIRING DIAGRAM
E-34 EXISTING SWITCHGEAR MVMCC-80 ELECTRICAL ONE-LINE DIAGRAM
E-35 EXISTING SWITCHGEAR MVMCC-80 DEMOLITION
E-36 EXISTING SWITCHGEAR MVMCC-80 MODIFICATIONS
E-37 EXISTING AIR BLOWERS EATON MP-3000 MOTOR PROTECTION RELAY WIRING DIAGRAM
E-38 EXISTING AIR BLOWERS SEL-710 MOTOR PROTECTION RELAY WIRING DIAGRAM
E-39 EXISTING SWITCHGEAR MVMCC-1 ELECTRICAL ONE-LINE DIAGRAM
E-40 EXISTING SWITCHGEAR MVMCC-1 (PLANT 1) DEMOLITION
E-41 EXISTING SWITCHGEAR MVMCC-1 (PLANT 2) DEMOLITION
E-42 EXISTING SWITCHGEAR MVMCC-1 (PLANT 1) MODIFICATIONS
E-43 EXISTING SWITCHGEAR MVMCC-1 (PLANT 2) MODIFICATIONS
E-44 EXISTING MAIN AIR COMPRESSORS (MAC) EATON MP-3000 MOTOR PROTECTION RELAY WIRING DIAGRAM
E-45 EXISTING MAIN AIR COMPRESSORS (MAC) SEL-710 MOTOR PROTECTION RELAY WIRING DIAGRAM

INSTRUMENTATION DRAWINGS

I-1 SWITCHGEAR NO. 1 SEL RELAY NETWORKING DIAGRAM (SHEET 1 OF 2)
I-2 SWITCHGEAR NO. 1 SEL RELAY NETWORKING DIAGRAM (SHEET 2 OF 2)

ENGINEER OF RECORD:
BOB E. HALLMAN, P.E.
FLORIDA REGISTRATION NO. 20761

Engineering Design Technologies Corp.
P.O. Box 152403
Tampa, FL 33684-2403
813.289.8080
813.282.9184 FAX
engineering@edt1.com
Certificate of Authorization Number: 4795

CITY of TAMPA
WASTEWATER DEPARTMENT

HFC AWTP SWITCHGEAR BLDG.
PROTECTIVE RELAY REPLACEMENT

DRAWING INDEX

NO.	DATE	REVISIONS

DRAWN: STK
DESIGN: BEH
QC: BEH
DATE: 08/13/18

INDEX

LEGEND

SYMBOL	DESCRIPTION
	HEAVY DUTY SAFETY SWITCH
	TRANSFORMER
	FLUORESCENT OR LED FIXTURE – CEILING MTD.
	INCAND., HID OR LED FIXTURE – CEILING MTD.
	INCAND., FLUORESCENT OR LED FIXTURE – STANCHION MTD.
	INCAND., HID OR LED FIXTURE – WALL MTD.
	EMERGENCY EXIT LIGHT
	EMERGENCY LIGHT
	20A, 125V, 3–WIRE DUPLEX RECEPT. CTR. @ 18" AFF.
	20A, 125V, 3–WIRE GROUNDING DUPLEX RECEPT. CTR. @ 50" AFF.
	20A, 125V, 3–WIRE DUPLEX RECEPT. FED FROM DEDICATED CIRCUIT.
	BRANCH CIRCUIT PANELBOARD
	120V, 1ø CIRCUIT HOMERUN TO 1–POLE BRKR.
	SLASH MARKS DENOTE NO. OF WIRES; LONG – NEUTRAL, X – GROUND.
	240V OR 480V, 1ø CIRCUIT HOMERUN TO 2–POLE BRKR.
	208V OR 480V, 3ø CIRCUIT HOMERUN TO 3–POLE BRKR.
75	MOTOR, 75 HP
	LIMIT SWITCH – NORMALLY OPEN
MOV	MOTOR OPERATED VALVE
MSH	MOTOR SPACE HEATER
RTD	RESISTANCE TEMPERATURE DETECTOR
VIB	VIBRATION SENSOR

SYMBOL	DESCRIPTION
	DOWN CONDUCTOR TO GROUND ROD
3 600AF/600AT	CIRCUIT BREAKER, 600 AMPERE FRAME, 600 AMPERE TRIP
	OUTPUT REACTOR
50/51/51G	SOLID STATE TRIP UNIT w/ FUNCTIONS NOTED, 50 INSTANTANEOUS TRIP, 51 TIME DELAY TRIP, 51G GROUND FAULT TRIP
	CUSTOMER METERING
	LIMIT SWITCH – NORMALLY CLOSED
LS	LEVEL SWITCH
	LIQUID LEVEL SWITCH – NORMALLY OPEN
	LIQUID LEVEL SWITCH – NORMALLY CLOSED
	PRESSURE SWITCH – NORMALLY OPEN
	PRESSURE SWITCH – NORMALLY CLOSED
J	JUNCTION BOX, PULL BOX – SIZED PER NEC
	CONDUIT – DOWN
	CONDUIT – UP
	SELECTOR SWITCH – NORMALLY OPEN
xM	MOTOR STARTER COIL, x DESIGNATES MOTOR ID. NO.
Rx	RELAY COIL, x DESIGNATES ID. NO.
xxR–y	RELAY CONTACT – NORMALLY OPEN, xx DESIGNATES RELAY ID. NO. & y DESIGNATES CONTACT NO.
xxR–y	RELAY CONTACT – NORMALLY CLOSED, xx DESIGNATES RELAY ID. NO. & y DESIGNATES CONTACT NO.
xMOL	MOTOR OVERLOAD RELAY – x DESIGNATES MOTOR I.D. NO.
	SOLENOID VALVE
	FUSE
	KEYED NOTE
x	LED PILOT LIGHT, x INDICATES COLOR, G=GREEN, R=RED, B=BLUE, A=AMBER
M (METER, PLAN VIEW)	TEC METER, RATING AS INDICATED ON DRAWINGS. CENTER METER 4'–6" ABOVE TOP OF PLATFORM.

SYMBOL	DESCRIPTION
SPD	SURGE PROTECTIVE DEVICE
PM	PHASE MONITOR
PB	PUSH BUTTON
K1	KIRK KEY INTERLOCK
M100	CONDUIT BUBBLE – REFERENCE CONDUIT SCHEDULE
RED	TEST SWITCH w/ CURRENT SHORTING (MAKE–BEFORE–BREAK) POLE. RED = COLOR HANDLE
BLACK	TEST SWITCH w/ POTENTIAL POLE BLACK = HANDLE COLOR

ABBREVIATIONS

A	AMPERES
AF	AMPERE FRAME
AFD	ADJUSTABLE FREQUENCY DRIVE
AFF	ABOVE FINISHED FLOOR
AT	AMPERE TRIP
ATS	AUTOMATIC TRANSFER SWITCH
C	CONDUIT
CAT	CATALOG
CLG	CEILING
CKT	CIRCUIT
CTR	CENTER
DISC	DISCONNECT
DT	DOUBLE THROW
DV	PUMP DISCHARGE VALVE
DWG	DRAWING
ELEC	ELECTRICAL, ELECTRIC
E.O.	ELECTRICALLY OPERATED
ESD	EMERGENCY SHUTDOWN
EXH	EXHAUST
GFCI	GROUND FAULT CIRCUIT INTERRUPTER
HP	HORSEPOWER
JB, JBOX	JUNCTION BOX
KW	KILOWATTS
KVA	KILOVOLT–AMPERE
LPX	LIGHTING PANEL X
MIN.	MINIMUM
MCC	MOTOR CONTROL CENTER
MLO	MAIN LUGS ONLY
MNTD	MOUNTED
MOV	MOTOR OPERATED VALVE
MSH	MOTOR SPACE HEATER
NC	NORMALLY CLOSED
NO	NORMALLY OPEN
PB	PUSH BUTTON
PH, ø	PHASE
POS	TRUCK OPERATED SWITCH INDICATING BREAKER POSITION, TEST/CONNECTED/ DISCONNECTED
PSV	PUMP SUCTION VALVE
PT	PRESSURE TRANSMITTER
PWR	POWER
RCBP	REMOTE CIRCUIT BREAKER PANEL
RECEPT	RECEPTACLE
RTD	RESISTANCE TEMPERATURE DETECTOR
SPD	SURGE PROTECTIVE DEVICE
SW	SWITCH
SWBD	SWITCHBOARD
TC	TRAY CABLE
TEC	TAMPA ELECTRIC COMPANY
THRU	THROUGH
TR	TRIP
TT	TEMPERATURE TRANSMITTER
TVSS	TRANSIENT VOLTAGE SURGE SUPPRESSOR
TYP	TYPICAL
UON	UNLESS OTHERWISE NOTED
V	VOLT
VIB	VIBRATION
W	WIRE
w/	WITH
XFMR	TRANSFORMER
XFR	TRANSFER
XMTR	TRANSMITTER

ENGINEER OF RECORD:
BOB E. HALLMAN, P.E.
FLORIDA REGISTRATION NO. 20761

Engineering Design Technologies Corp.
P.O. Box 152403
Tampa, FL 33684-2403
813.289.8080
813.282.9184 FAX
engineering@edt1.com
Certificate of Authorization Number: 4795

CITY of TAMPA
WASTEWATER DEPARTMENT

HFC AWTP SWITCHGEAR BLDG.
PROTECTIVE RELAY REPLACEMENT

ELECTRICAL LEGEND & ABBREVIATIONS

NO.	DATE	REVISIONS

DRAWN: STK
DESIGN: BEH
QC: BEH
DATE: 08/13/18

SHEET E-1

GENERAL NOTES:

1. CONTRACTOR SHALL SUBMIT SHOP DRAWINGS FOR APPROVAL AND SHALL RECEIVE SAID APPROVAL PRIOR TO PURCHASING EQUIPMENT OR COMMENCING CONSTRUCTION.
2. ALL SHOP DRAWINGS SUBMITTED TO ENGINEER FOR APPROVAL SHALL BE ORIGINAL COPIES. COPIES OF SHOP DRAWINGS OR DATA SHEETS TRANSMITTED BY FACSIMILE (FAX) WILL NOT BE REVIEWED.
3. SHIELD AND DRAIN WIRE FOR EACH ANALOG SIGNAL (4–20 mA) CABLE SHALL BE GROUNDED AT ONE END ONLY. THE GROUND SHALL BE AT THE PLC OR THE TRANSMITTER ONLY, NOT AT THE FIELD DEVICE. THE SHIELD AND DRAIN WIRE AT EACH FIELD DEVICE SHALL BE NEATLY TRIMMED & TAPED w/ (2) LAYERS OF VINYL ELECTRICAL TAPE (SCOTCH 33+).
4. ALL CONDUCTORS SHALL BE STRANDED COPPER, #12 AWG MIN. w/ THHN INSULATION, UNLESS OTHERWISE NOTED.
5. ALL WIRING SHALL BE IDENTIFIED w/ NUMBERS AT ALL TERMINALS AND ON WIRING DIAGRAMS. MARKERS SHALL BE THOMAS & BETTS INSTA–CODE CLIP–ON MARKERS OR APPROVED EQUAL.
6. ALL CIRCUITS SHALL HAVE GROUNDING CONDUCTORS ROUTED INSIDE THE CONDUIT w/ POWER CONDUCTORS.
7. NEATLY COIL & TAPE SPARE CONDUCTORS w/ VINYL ELECTRICAL TAPE (SCOTCH 33+) U.O.N.
8. ALL CONDUCTOR LENGTHS SHALL BE CONTINUOUS. NO SPLICES OR CONDUCTOR TERMINATIONS SHALL BE PERMITTED UNLESS SPECIFICALLY DESIGNATED IN THE DRAWINGS.
9. ALL THREADED CONNECTIONS SHALL BE COATED w/ COPPER SHIELD ANTI–SEIZE COMPOUND MANUFACTURED BY THOMAS & BETTS (T & B).
10. CONDUIT ROUTING SHOWN IS DIAGRAMMATIC UNLESS OTHERWISE NOTED. CONTRACTOR SHALL OPTIMIZE THE CONDUIT ROUTING, TAKING INTO ACCOUNT THE FIELD CONDITIONS AND THE FINAL EQUIPMENT SELECTED AND APPROVED IN THE SUBMITTALS.
11. ALL CONDUIT SHALL BE SUPPORTED AT MAXIMUM 5'–0" INTERVALS.
12. ALL FASTENING AND MOUNTING HARDWARE SHALL BE 316 SS. CAD PLATED HARDWARE WILL NOT BE ACCEPTED.
13. ALL UNISTRUT SHALL BE 1 5/8" x 1 5/8" x 12 GA. 316 STAINLESS STEEL.
14. CONTRACTOR SHALL FIELD VERIFY ALL MECHANICAL EQUIPMENT SIZES AND RATINGS PRIOR TO CONNECTING.
15. CONTRACTOR SHALL FIELD VERIFY ALL EQUIPMENT LOCATIONS AND CONNECTIONS PRIOR TO COMMENCING CONSTRUCTION.
16. ALL PANELS, PANEL COMPONENTS, DISCONNECTS, SWITCHES & EQUIPMENT COVERPLATES SHALL BE LABELED w/ NAMEPLATES. NAMEPLATES SHALL BE THREE PLY PHENOLIC BLACK–WHITE–BLACK ENGRAVED THROUGH THE FIRST BLACK LAYER. LETTERING SHALL BE 0.5 CM (3/16") MIN. EDGES OF NAMEPLATES SHALL BE BEVELED 45°. THE NAMEPLATES SHALL BE SECURED TO EQUIPMENT WITH STAINLESS STEEL SCREWS OR RIVETS. THE USE OF GLUE IS NOT PERMITTED.
17. ALL INSTALLED COMPONENTS SHALL BE LISTED BY UNDERWRITERS LABORATORY (UL), OR SIMILAR NATIONALLY RECOGNIZED TESTING LABORATORY.
18. ALL EQUIPMENT SHALL BE INSTALLED AT AN ELEVATION ABOVE THE 100 YEAR FLOOD ELEVATION ESTABLISHED BY FEMA AND/OR LOCAL AUTHORITIES. HFC PLANT ELEVATION: 10.0 FT (BASED ON NAVD88 VERTICAL DATUM), 10.86 FT (BASED ON NGVD29 VERTICAL DATUM).
19. REFERENCE PLAN & SECTION DRAWINGS FOR EQUIPMENT LOCATIONS.
20. COORDINATE ALL INSTALLATIONS w/ ALL OTHER TRADES.
21. THE CONTRACTOR SHALL NOTIFY THE ENGINEER IMMEDIATELY WHEN CONFLICTS BETWEEN DRAWINGS & ACTUAL CONDITIONS ARE DISCOVERED.
22. ALL "AS BUILT" DRAWINGS PROVIDED BY THE CONTRACTOR SHALL BE SIGNED AND DATED WITH CHANGES CLEARLY NOTED IN RED. ADDITIONALLY, THE PRINTED NAME OF THE INDIVIDUAL SIGNING THE "AS BUILT" DRAWINGS ALONG WITH THAT PERSON'S COMPANY AFFILIATION SHALL BE INCLUDED. IF NO CHANGES WERE MADE DURING CONSTRUCTION, A NOTE DESIGNATING "NO CHANGES" SHALL BE INCLUDED ON THE "AS BUILT" DRAWINGS.
23. ALL EXISTING INSTALLATIONS DENOTED ON THE DRAWINGS ARE FOR CONTRACTOR'S REFERENCE ONLY. ALL EXISTING INSTALLATIONS SHALL BE FIELD VERIFIED PRIOR TO SUBMITTING A BID & PRIOR TO COMMENCING CONSTRUCTION.
24. PROVIDE A MINIMUM OF 3'–0" CLEARANCE IN FRONT OF ALL ELECTRICAL EQUIPMENT.
25. ALL CONDUITS ROUTED IN CONCRETE SHALL BE INSTALLED WITH A SEPARATION BETWEEN CONDUITS OF NOT LESS THAN 3 DIAMETERS (CENTER–TO–CENTER).
26. ALL CONDUIT EXPOSED ABOVE GRADE SHALL BE RIGID HEAVY WALL ALUMINUM, UNLESS OTHERWISE NOTED. CONDUITS EXTENDING BELOW GRADE SHALL BE RIGID HEAVY WALL ALUMINUM CONDUIT THROUGH AND INCLUDING THE FIRST 90 DEGREE ELBOW (OR EQUIVALENT SET OF FITTINGS) INSTALLED BELOW GRADE. ALL PVC CONDUIT SHALL BE SCHEDULE 80. CONNECTIONS TO PVC CONDUIT SHALL BE MADE w/ A RIGID ALUMINUM TO PVC CONDUIT ADAPTER.
27. THE CITY OF TAMPA REQUIRES THAT ALL ELECTRICAL WORK BE PERFORMED IN ACCORDANCE w/ THE 2014 EDITION OF THE NEC. ALL INSTALLATIONS SHALL BE IN ACCORDANCE WITH THIS EDITION OF THE NEC.
28. ALL INSTALLATIONS SHALL COMPLY WITH THE 2017 FLORIDA BUILDING CODE, 6TH EDITION.
29. ALL INSTALLATIONS SHALL BE IN ACCORDANCE WITH CITY OF TAMPA CODE CHAPTER 5.

ENGINEER OF RECORD:
BOB E. HALLMAN, P.E.
FLORIDA REGISTRATION NO. 20761

Engineering Design Technologies Corp.
P.O. Box 152403
Tampa, FL 33684-2403
813.289.8080
813.282.9184 FAX
engineering@edt1.com
Certificate of Authorization Number: 4795

CITY of TAMPA
WASTEWATER DEPARTMENT

HFC AWTP SWITCHGEAR BLDG.
PROTECTIVE RELAY REPLACEMENT

ELECTRICAL GENERAL NOTES

NO.	DATE	REVISIONS

DRAWN: STK
DESIGN: BEH
QC: BEH
DATE: 08/13/18

SHEET E-2

ANSI DEVICE NUMBERS:

NUMBER:	DESCRIPTION:
1	Master Element
2	Time–delay Starting or Closing Relay
3	Checking or Interlocking Relay
4	Master Contactor
5	Stopping Device
6	Starting Circuit Breaker
7	Anode Circuit Breaker
8	Control Power Disconnecting Device
9	Reversing Device
10	Unit Sequence Switch
12	Overspeed Device
13	Synchronous–Speed Device
14	Underspeed Device
15	Speed or Frequency Matching Device
17	Shunting or Discharge Switch
18	Accelerating or Decelerating Device
19	Starting–to–Running Transition Contactor
20	Electrically–Operated Valve
21	Distance Relay
22	Equalizer circuit breaker
23	Temperature control device
25	Synchronizing or synchronism–check device
26	Apparatus thermal device
27	Undervoltage relay
29	Isolating Contactor
30	Annunciator Relay
31	Separate Excitation Device
32	Directional Power Relay
33	Position Switch
34	Motor Operated Sequence Switch
35	Brush–Operating or Slip–ring Short Circuiting Device
36	Polarity Device
37	Undercurrent or Underpower Relay
38	Bearing Protective Device
40	Field Relay
41	Field Circuit Breaker
42	Running Circuit Breaker
43	Manual Transfer or Selector Device
44	Unit Sequence Starting Relay
46	Reverse–Phase or Phase Balance Current Relay
47	Phase–Sequence Voltage Relay
48	Incomplete Sequence Relay
49	Machine or Transformer Thermal Relay
50	Instantaneous Overcurrent or Rate of Rise Relay
51	AC Time Overcurrent Relay
52	AC circuit breaker
53	Exciter or DC Generator Relay
54	High Speed DC Circuit Breaker
55	Power Factor Relay
56	Field Application Relay
57	Short–Circuiting or Grounding Device
58	Rectification Failure Relay
59	Overvoltage Balance Relay
60	Voltage Balance Relay
61	Current Balance Relay
62	Time–Delay Stopping or Opening Relay
63	Pressure Switch Detector
64	Ground Protective Relay
65	Governor
66	Notching or Jogging Device
67	Overcurrent
68	Blocking Relay
69	Permissive Control Device
70	Electrically Operated Rheostat
72	DC Circuit Breaker
73	Load–Resistor Contactor
74	Alarm Relay
75	Position Changing Mechanism
76	DC Overcurrent Relay
77	Pulse Transmitter
78	Phase Angle Measuring or Out–of–Step Protective Relay
79	AC Reclosing
81	Frequency Relay
82	DC Reclosing Relay
83	Automatic Selective Control or Transfer Relay
84	Operating Mechanism
85	Carrier or Pilot–Wire Relay
86	Lock–Out Relay
87	Differential Protective Relay
88	Auxiliary Motor or Motor Generator
89	Line Switch
90	Regulating Device
91	Voltage Directional Relay
92	Voltage And Power Directional Relay
93	Field–Changing Contactor
94	Tripping or Trip–Free Relay
95–A	Automatic Auxiliary Relay
95–M	Manual Auxiliary Relay

ENGINEER OF RECORD:
BOB E. HALLMAN, P.E.
FLORIDA REGISTRATION NO. 20761

Engineering Design Technologies Corp.
P.O. Box 152403
Tampa, FL 33684-2403
813.289.8080
813.282.9184 FAX
engineering@edt1.com
Certificate of Authorization Number: 4795

CITY of TAMPA
WASTEWATER DEPARTMENT

HFC AWTP SWITCHGEAR BLDG.
PROTECTIVE RELAY REPLACEMENT

ANSI DEVICE NUMBER LEGEND

NO.	DATE	REVISIONS

DRAWN: STK
DESIGN: BEH
QC: BEH
DATE: 08/13/18

SHEET E-3

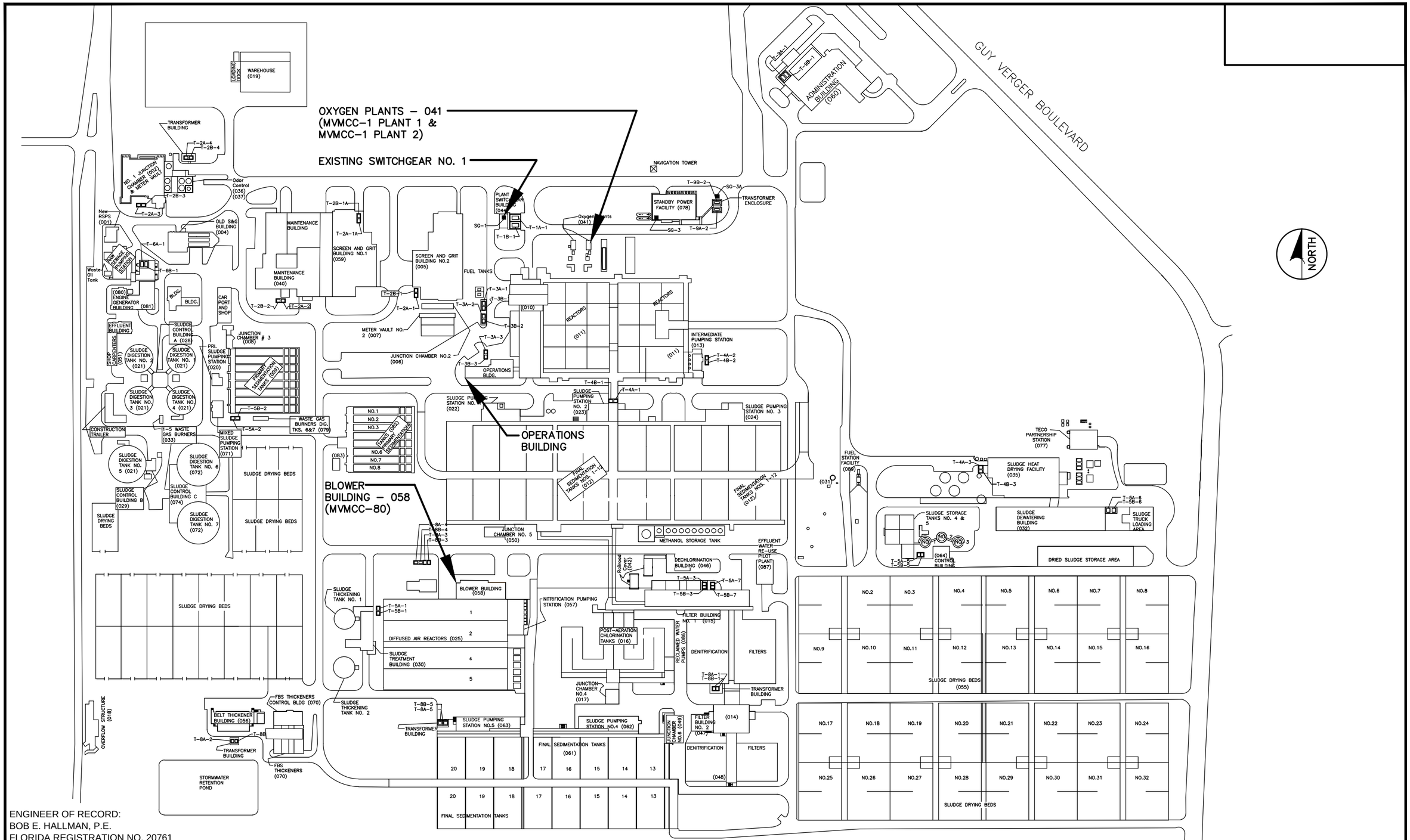

ENGINEER OF RECORD:
BOB E. HALLMAN, P.E.
FLORIDA REGISTRATION NO. 20761

Engineering Design Technologies Corp.
P.O. Box 152403
Tampa, FL 33684-2403
813.289.8080
813.282.9184 FAX
engineering@edt1.com

Certificate of Authorization Number: 4795

CITY of TAMPA
WASTEWATER DEPARTMENT

HFC AWTP SWITCHGEAR BLDG. PROTECTIVE RELAY REPLACEMENT

HOWARD F. CURREN AWTP PLANT OVERVIEW

NO.	DATE	REVISIONS

DRAWN: STK
DESIGN: BEH
QC: BEH
DATE: 08/13/18

SHEET E-4

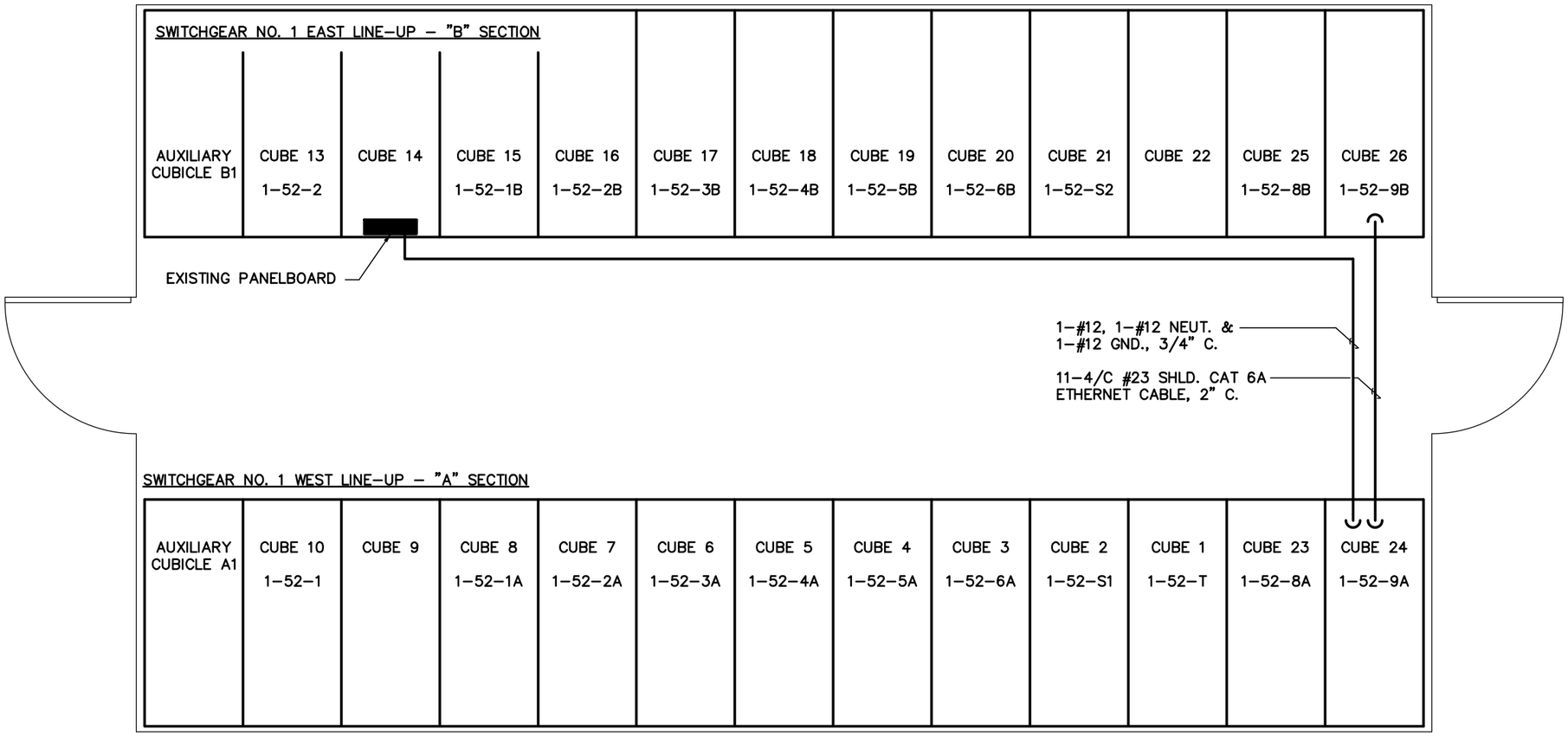

NOTES:

1. EXISTING INSTALLATIONS DENOTED ON THE DRAWINGS ARE FOR CONTRACTOR'S REFERENCE ONLY. ALL EXISTING INSTALLATIONS SHALL BE FIELD VERIFIED PRIOR TO COMMENCING CONSTRUCTION.

ENGINEER OF RECORD:
BOB E. HALLMAN, P.E.
FLORIDA REGISTRATION NO. 20761

Engineering Design Technologies Corp.
P.O. Box 152403
Tampa, FL 33684-2403
813.289.8080
813.282.9184 FAX
engineering@edt1.com
Certificate of Authorization Number: 4795

CITY of TAMPA
WASTEWATER DEPARTMENT

HFC AWTP SWITCHGEAR BLDG.
PROTECTIVE RELAY REPLACEMENT

EXISTING SWITCHGEAR NO. 1 PLAN VIEW

NO.	DATE	REVISIONS

DRAWN: STK
DESIGN: BEH
QC: BEH
DATE: 08/13/18

SHEET E-5

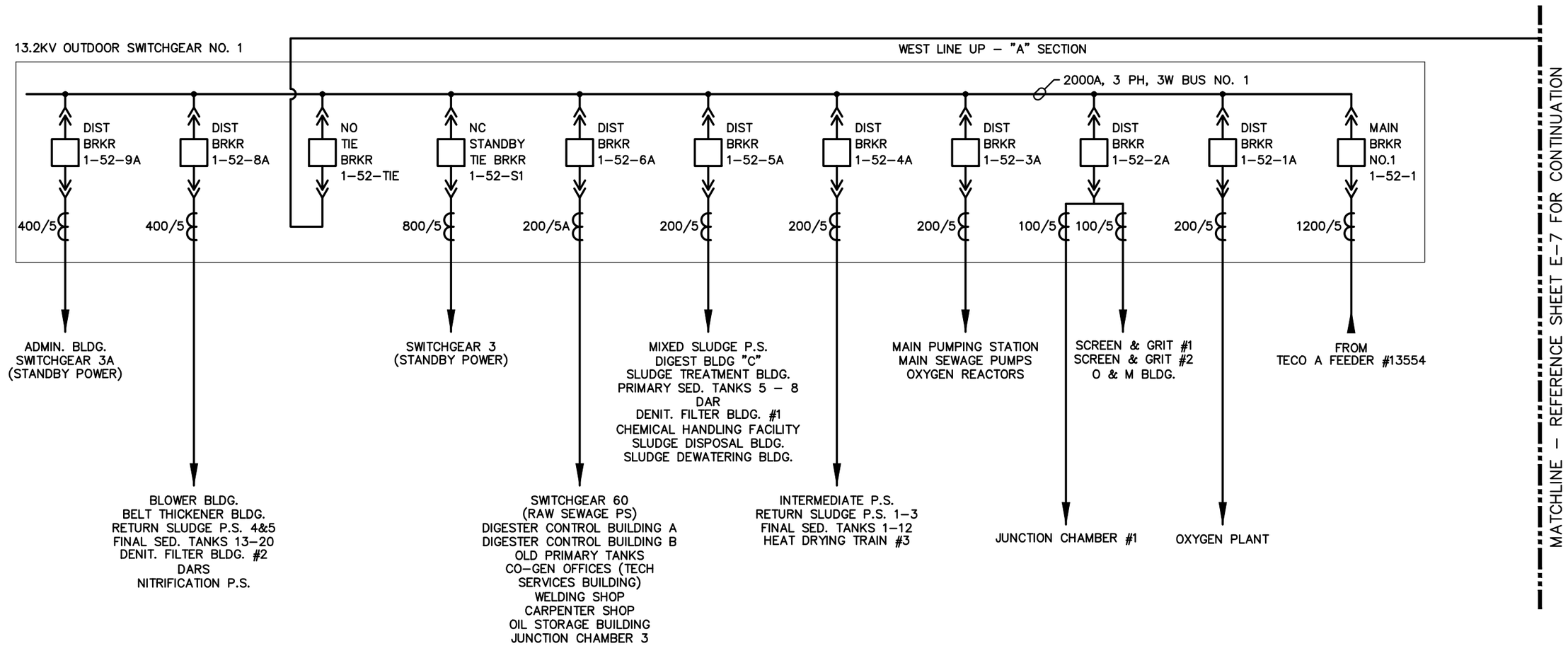

ENGINEER OF RECORD:
BOB E. HALLMAN, P.E.
FLORIDA REGISTRATION NO. 20761

Engineering Design Technologies Corp.
P.O. Box 152403
Tampa, FL 33684-2403
813.289.8080
813.282.9184 FAX
engineering@edt1.com
Certificate of Authorization Number: 4795

CITY of TAMPA
WASTEWATER DEPARTMENT

HFC AWTP SWITCHGEAR BLDG.
PROTECTIVE RELAY REPLACEMENT

EXISTING SWITCHGEAR NO. 1
ELECTRICAL ONE–LINE DIAGRAM
(SHEET 1 OF 2)

NO.	DATE	REVISIONS

DRAWN: STK
DESIGN: BEH
QC: BEH
DATE: 08/13/18

SHEET E-6

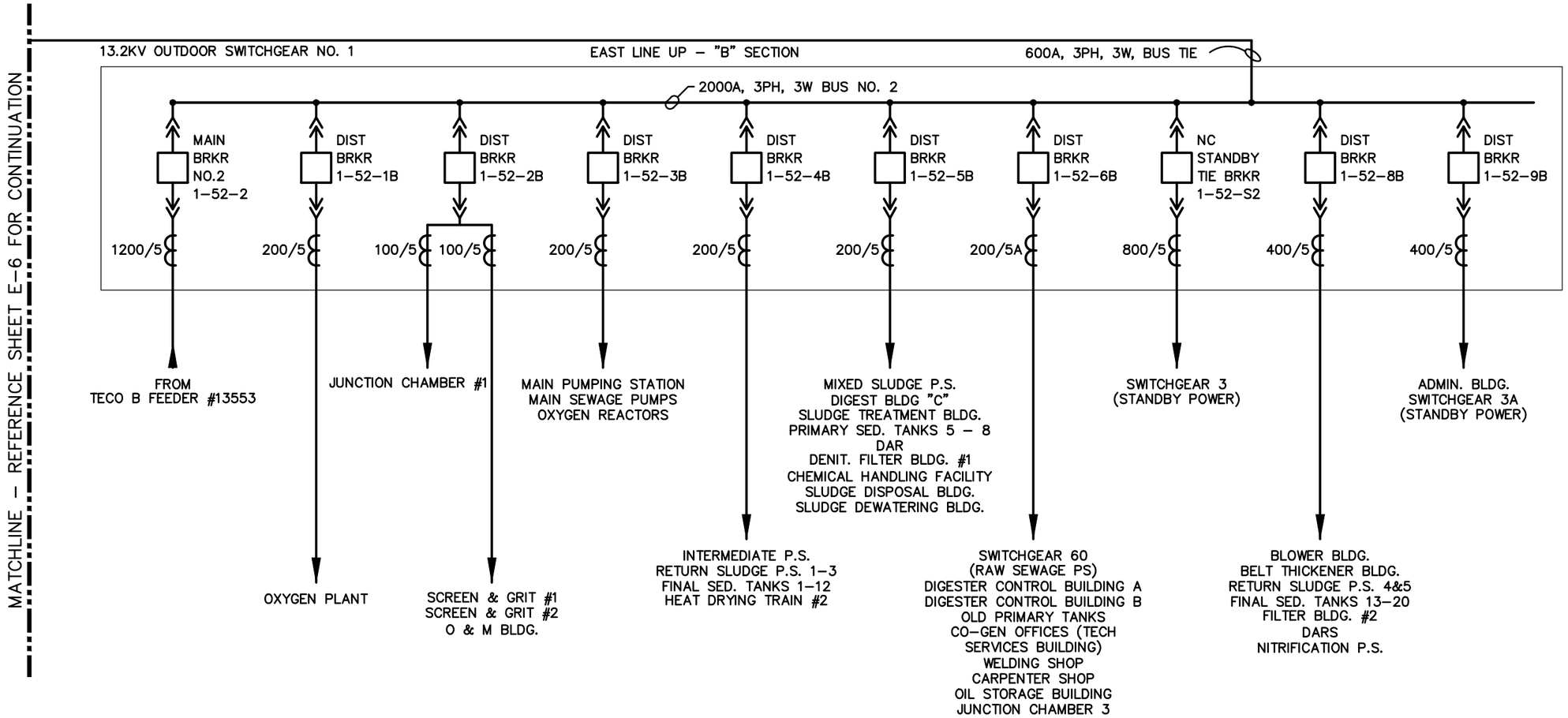

ENGINEER OF RECORD:
BOB E. HALLMAN, P.E.
FLORIDA REGISTRATION NO. 20761

Engineering Design Technologies Corp.
P.O. Box 152403
Tampa, FL 33684-2403
813.289.8080
813.282.9184 FAX
engineering@edt1.com
Certificate of Authorization Number: 4795

CITY of TAMPA
WASTEWATER DEPARTMENT

HFC AWTP SWITCHGEAR BLDG.
PROTECTIVE RELAY REPLACEMENT

EXISTING SWITCHGEAR NO. 1
ELECTRICAL ONE–LINE DIAGRAM
(SHEET 2 OF 2)

NO.	DATE	REVISIONS

DRAWN: STK
DESIGN: BEH
QC: BEH
DATE: 08/13/18

SHEET E-7

PROVIDE COVERPLATE OVER UNUSED OPENINGS FOR COMPONENTS REMOVED DURING DEMOLITION. EACH COVERPLATE SHALL BE MADE OF 1/8" THICK COPPER-FREE ALUMINUM SECURED IN PLACE w/ 316 STAINLESS STEEL SHEET METAL SCREWS. THE COVERPLATE SHALL BE FINISHED/PAINTED TO MATCH THE EXISTING SWITCHGEAR (TYP.)

AFTER REMOVING THE EXISTING PROTECTIVE RELAY, THE OPENING SHALL CONTAIN A NEW SEL PROTECTIVE RELAY w/ MOUNTING KIT TO COVER EXISTING OPENING (TYP.)

SEE NOTE 4 (TYP.)

SWITCHGEAR NO. 1 WEST LINE-UP – "A" SECTION

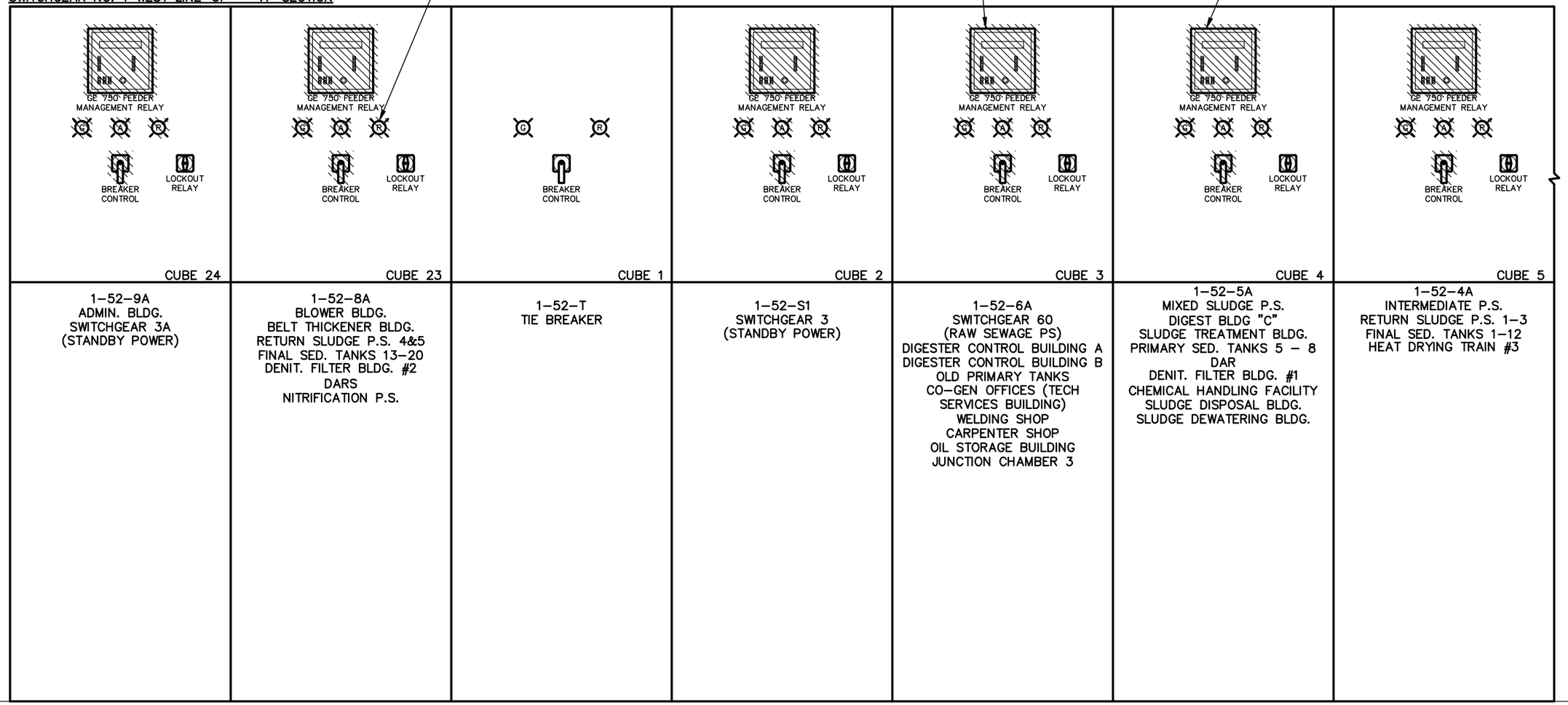

NOTES:

– DENOTES EXISTING DEVICE AND WIRING TO BE REMOVED. ITEM SHALL BE REMOVED FROM PREMISES AND DISPOSED OF PROPERLY, UNLESS OTHERWISE NOTED. UNLESS SPECIFICALLY SHOWN OTHERWISE, ALL EXISTING WIRING CONNECTED TO THE DEVICES SHOWN SHALL REMAIN AND SHALL BE RE-CONNECTED AS SHOWN IN THE DRAWINGS. REMOVE ALL WIRING WHERE INDICATED. PROVIDE A BLANK COVERPLATE TO COVER ANY OPENING RESULTING FROM A DEVICE BEING REMOVED FROM THE EXISTING SWITCHGEAR AND THE DEVICE IS NOT BEING REPLACED.

1. COORDINATE ALL DEMOLITION ACTIVITIES WITH OWNER AND ALL TRADES.
2. ALL EQUIPMENT & WIRING INCLUDED ON THIS DRAWING ARE EXISTING. CONTRACTOR SHALL VISIT THE SITE & FAMILIARIZE HIMSELF WITH THE EXISTING CONDITIONS BEFORE SUBMITTING A BID OR COMMENCING CONSTRUCTION.
3. ALL EXISTING INSTALLATIONS DENOTED ON THE DRAWINGS ARE FOR CONTRACTOR'S REFERENCE ONLY. ALL EXISTING INSTALLATIONS SHALL BE FIELD VERIFIED PRIOR TO COMMENCING CONSTRUCTION.
4. THE EXISTING WIRING & TERMINATIONS TO THE GE 750 FEEDER MANAGEMENT RELAY SHALL REMAIN FOR CONNECTING THE NEW SEL MONITORING RELAYS.

ENGINEER OF RECORD:
BOB E. HALLMAN, P.E.
FLORIDA REGISTRATION NO. 20761

Engineering Design Technologies Corp.
P.O. Box 152403
Tampa, FL 33684-2403
813.289.8080
813.282.9184 FAX
engineering@edt1.com
Certificate of Authorization Number: 4795

CITY of TAMPA
WASTEWATER DEPARTMENT

HFC AWTP SWITCHGEAR BLDG.
PROTECTIVE RELAY REPLACEMENT

EXISTING SWITCHGEAR NO. 1 DEMOLITION
(SHEET 1 OF 4)

NO.	DATE	REVISIONS

DRAWN: STK
DESIGN: BEH
QC: BEH
DATE: 08/13/18

SHEET E-8

AFTER REMOVING THE EXISTING PROTECTIVE RELAY, THE OPENING SHALL CONTAIN A NEW SEL PROTECTIVE RELAY w/ MOUNTING KIT TO COVER EXISTING OPENING (TYP.)

SEE NOTE 4 (TYP.)

PROVIDE COVERPLATE OVER UNUSED OPENINGS FOR COMPONENTS REMOVED DURING DEMOLITION. EACH COVERPLATE SHALL BE MADE OF 1/8" THICK COPPER-FREE ALUMINUM SECURED IN PLACE w/ 316 STAINLESS STEEL SHEET METAL SCREWS. THE COVERPLATE SHALL BE FINISHED/PAINTED TO MATCH THE EXISTING SWITCHGEAR (TYP.)

SWITCHGEAR NO. 1 WEST LINE-UP – "A" SECTION

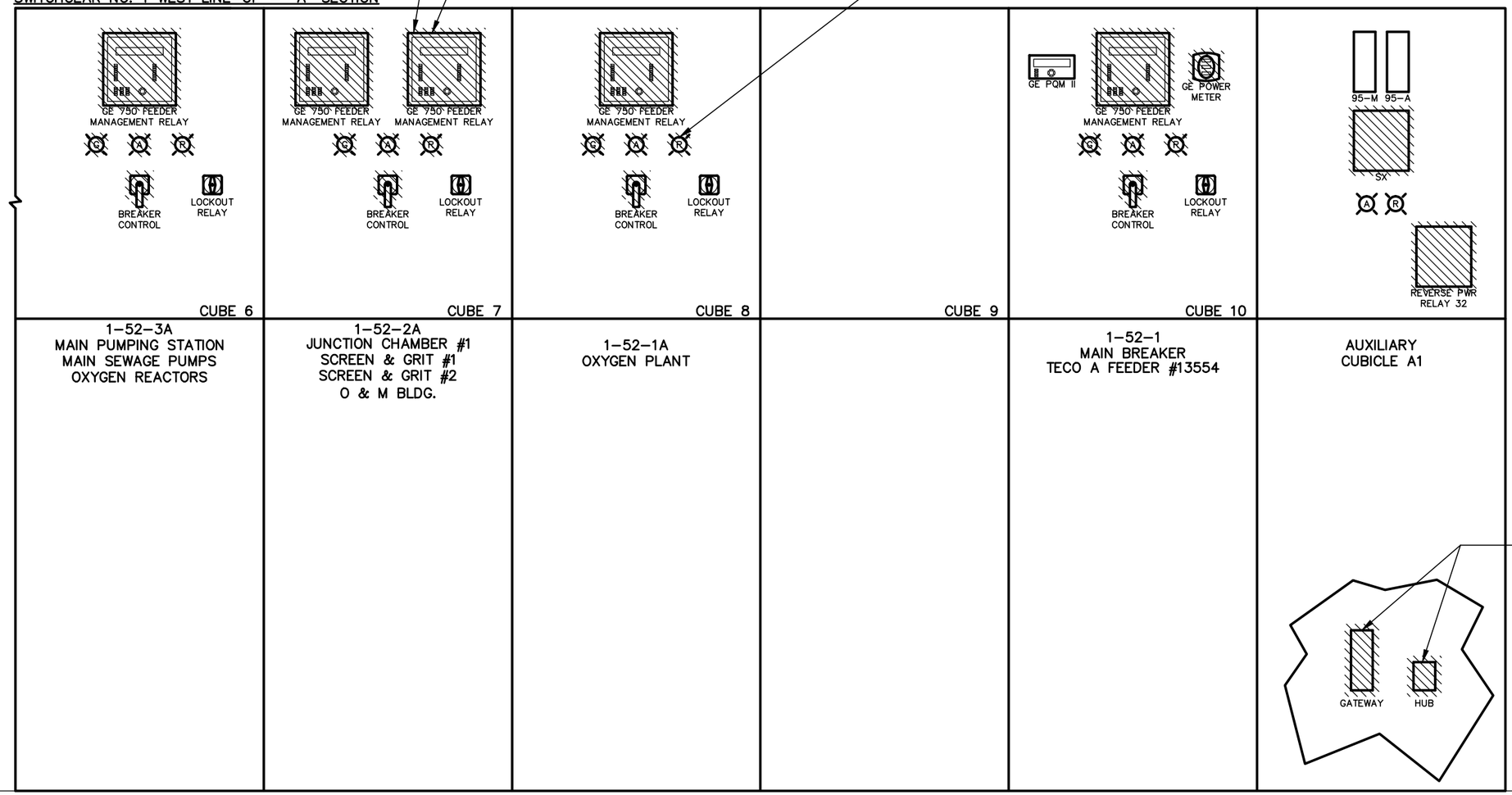

REMOVE THE EXISTING BLACK BOX NETWORKING HUB & ETHERNET TO SERIAL GATEWAY, COMPLETE w/ ALL ASSOCIATED COMMUNICATION CABLING

NOTES:

– DENOTES EXISTING DEVICE AND WIRING TO BE REMOVED. ITEM SHALL BE REMOVED FROM PREMISES AND DISPOSED OF PROPERLY, UNLESS OTHERWISE NOTED. UNLESS SPECIFICALLY SHOWN OTHERWISE, ALL EXISTING WIRING CONNECTED TO THE DEVICES SHOWN SHALL REMAIN AND SHALL BE RE-CONNECTED AS SHOWN IN THE DRAWINGS. REMOVE ALL WIRING WHERE INDICATED. PROVIDE A BLANK COVERPLATE TO COVER ANY OPENING RESULTING FROM A DEVICE BEING REMOVED FROM THE EXISTING SWITCHGEAR AND THE DEVICE IS NOT BEING REPLACED.

1. COORDINATE ALL DEMOLITION ACTIVITIES WITH OWNER AND ALL TRADES.
2. ALL EQUIPMENT & WIRING INCLUDED ON THIS DRAWING ARE EXISTING. CONTRACTOR SHALL VISIT THE SITE & FAMILIARIZE HIMSELF WITH THE EXISTING CONDITIONS BEFORE SUBMITTING A BID OR COMMENCING CONSTRUCTION.
3. ALL EXISTING INSTALLATIONS DENOTED ON THE DRAWINGS ARE FOR CONTRACTOR'S REFERENCE ONLY. ALL EXISTING INSTALLATIONS SHALL BE FIELD VERIFIED PRIOR TO COMMENCING CONSTRUCTION.
4. THE EXISTING WIRING & TERMINATIONS TO THE GE 750 FEEDER MANAGEMENT RELAY SHALL REMAIN FOR CONNECTING THE NEW SEL MONITORING RELAYS.

ENGINEER OF RECORD:
BOB E. HALLMAN, P.E.
FLORIDA REGISTRATION NO. 20761

Engineering Design Technologies Corp.
P.O. Box 152403
Tampa, FL 33684-2403
813.289.8080
813.282.9184 FAX
engineering@edt1.com
Certificate of Authorization Number: 4795

CITY of TAMPA
WASTEWATER DEPARTMENT

HFC AWTP SWITCHGEAR BLDG.
PROTECTIVE RELAY REPLACEMENT

EXISTING SWITCHGEAR NO. 1 DEMOLITION
(SHEET 2 OF 4)

NO.	DATE	REVISIONS

DRAWN: STK
DESIGN: BEH
QC: BEH
DATE: 08/13/18

SHEET E-9

AFTER REMOVING THE EXISTING PROTECTIVE RELAY, THE OPENING SHALL CONTAIN A NEW SEL PROTECTIVE RELAY w/ MOUNTING KIT TO COVER EXISTING OPENING (TYP.)

SEE NOTE 4 (TYP.)

PROVIDE COVERPLATE OVER UNUSED OPENINGS FOR COMPONENTS REMOVED DURING DEMOLITION. EACH COVERPLATE SHALL BE MADE OF 1/8" THICK COPPER-FREE ALUMINUM SECURED IN PLACE w/ 316 STAINLESS STEEL SHEET METAL SCREWS. THE COVERPLATE SHALL BE FINISHED/PAINTED TO MATCH THE EXISTING SWITCHGEAR (TYP.)

SWITCHGEAR NO. 1 EAST LINE-UP – "B" SECTION

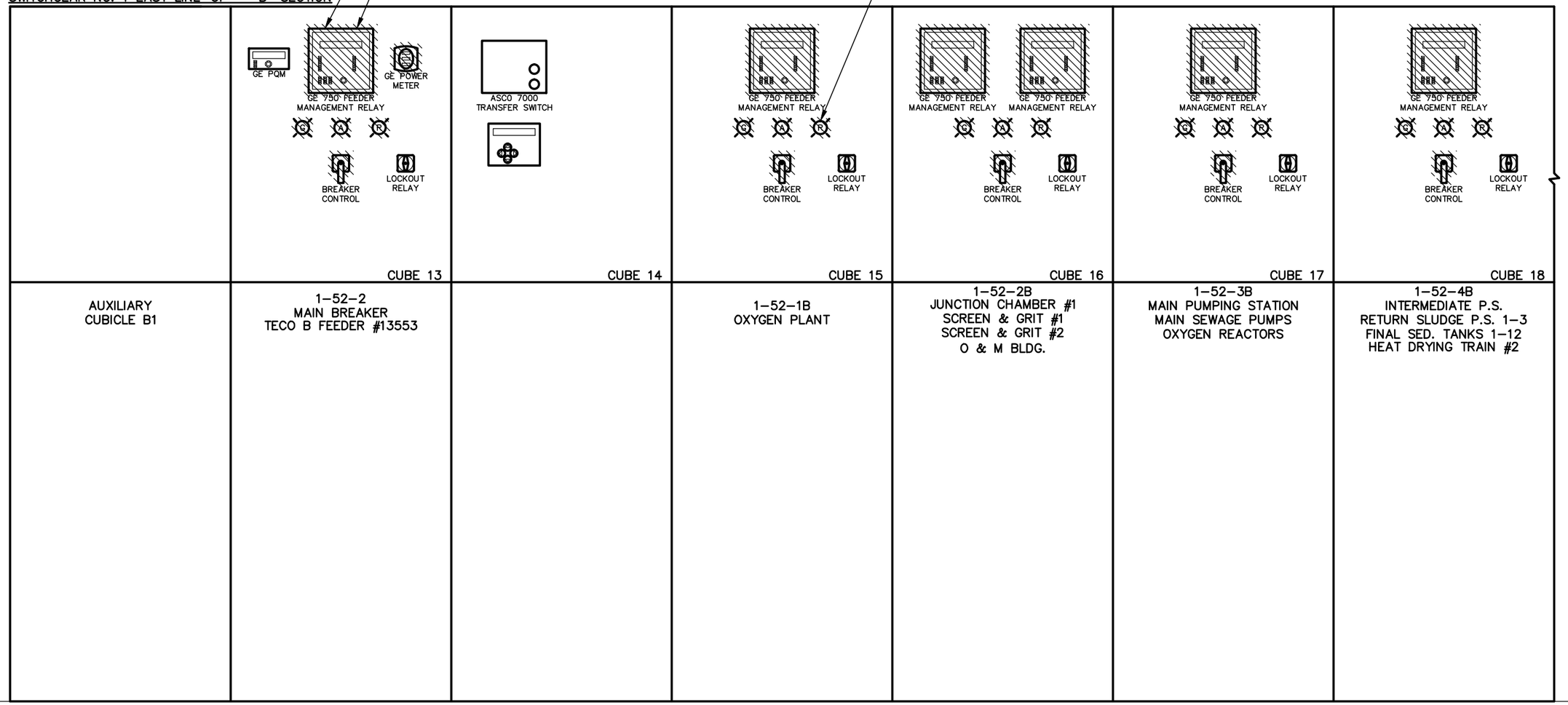

NOTES:

– DENOTES EXISTING DEVICE AND WIRING TO BE REMOVED. ITEM SHALL BE REMOVED FROM PREMISES AND DISPOSED OF PROPERLY, UNLESS OTHERWISE NOTED. UNLESS SPECIFICALLY SHOWN OTHERWISE, ALL EXISTING WIRING CONNECTED TO THE DEVICES SHOWN SHALL REMAIN AND SHALL BE RE-CONNECTED AS SHOWN IN THE DRAWINGS. REMOVE ALL WIRING WHERE INDICATED. PROVIDE A BLANK COVERPLATE TO COVER ANY OPENING RESULTING FROM A DEVICE BEING REMOVED FROM THE EXISTING SWITCHGEAR AND THE DEVICE IS NOT BEING REPLACED.

1. COORDINATE ALL DEMOLITION ACTIVITIES WITH OWNER AND ALL TRADES.
2. ALL EQUIPMENT & WIRING INCLUDED ON THIS DRAWING ARE EXISTING. CONTRACTOR SHALL VISIT THE SITE & FAMILIARIZE HIMSELF WITH THE EXISTING CONDITIONS BEFORE SUBMITTING A BID OR COMMENCING CONSTRUCTION.
3. ALL EXISTING INSTALLATIONS DENOTED ON THE DRAWINGS ARE FOR CONTRACTOR'S REFERENCE ONLY. ALL EXISTING INSTALLATIONS SHALL BE FIELD VERIFIED PRIOR TO COMMENCING CONSTRUCTION.
4. THE EXISTING WIRING & TERMINATIONS TO THE GE 750 FEEDER MANAGEMENT RELAY SHALL REMAIN FOR CONNECTING THE NEW SEL MONITORING RELAYS.

ENGINEER OF RECORD:
BOB E. HALLMAN, P.E.
FLORIDA REGISTRATION NO. 20761

Engineering Design Technologies Corp.
P.O. Box 152403
Tampa, FL 33684-2403
813.289.8080
813.282.9184 FAX
engineering@edt1.com
Certificate of Authorization Number: 4795

CITY of TAMPA
WASTEWATER DEPARTMENT

HFC AWTP SWITCHGEAR BLDG.
PROTECTIVE RELAY REPLACEMENT

EXISTING SWITCHGEAR NO. 1 DEMOLITION
(SHEET 3 OF 4)

NO.	DATE	REVISIONS

DRAWN: STK
DESIGN: BEH
QC: BEH
DATE: 08/13/18

SHEET E-10

AFTER REMOVING THE EXISTING PROTECTIVE RELAY, THE OPENING SHALL CONTAIN A NEW SEL PROTECTIVE RELAY w/ MOUNTING KIT TO COVER EXISTING OPENING (TYP.)

SEE NOTE 4 (TYP.)

PROVIDE COVERPLATE OVER UNUSED OPENINGS FOR COMPONENTS REMOVED DURING DEMOLITION. EACH COVERPLATE SHALL BE MADE OF 1/8" THICK COPPER-FREE ALUMINUM SECURED IN PLACE w/ 316 STAINLESS STEEL SHEET METAL SCREWS. THE COVERPLATE SHALL BE FINISHED/PAINTED TO MATCH THE EXISTING SWITCHGEAR (TYP.)

SWITCHGEAR NO. 1 EAST LINE-UP – "B" SECTION

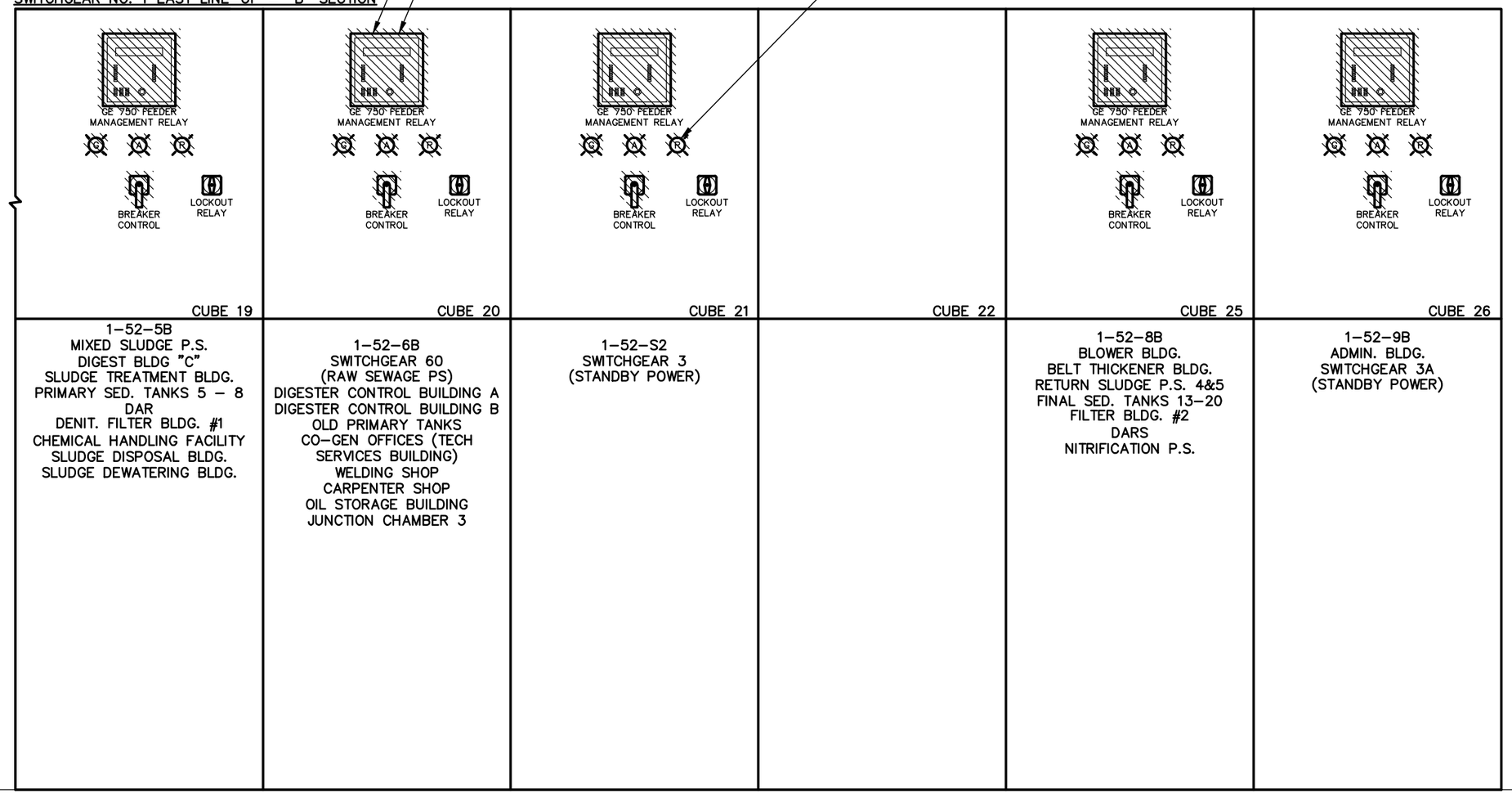

NOTES:

– DENOTES EXISTING DEVICE AND WIRING TO BE REMOVED. ITEM SHALL BE REMOVED FROM PREMISES AND DISPOSED OF PROPERLY, UNLESS OTHERWISE NOTED. UNLESS SPECIFICALLY SHOWN OTHERWISE, ALL EXISTING WIRING CONNECTED TO THE DEVICES SHOWN SHALL REMAIN AND SHALL BE RE-CONNECTED AS SHOWN IN THE DRAWINGS. REMOVE ALL WIRING WHERE INDICATED. PROVIDE A BLANK COVERPLATE TO COVER ANY OPENING RESULTING FROM A DEVICE BEING REMOVED FROM THE EXISTING SWITCHGEAR AND THE DEVICE IS NOT BEING REPLACED.

1. COORDINATE ALL DEMOLITION ACTIVITIES WITH OWNER AND ALL TRADES.
2. ALL EQUIPMENT & WIRING INCLUDED ON THIS DRAWING ARE EXISTING. CONTRACTOR SHALL VISIT THE SITE & FAMILIARIZE HIMSELF WITH THE EXISTING CONDITIONS BEFORE SUBMITTING A BID OR COMMENCING CONSTRUCTION.
3. ALL EXISTING INSTALLATIONS DENOTED ON THE DRAWINGS ARE FOR CONTRACTOR'S REFERENCE ONLY. ALL EXISTING INSTALLATIONS SHALL BE FIELD VERIFIED PRIOR TO COMMENCING CONSTRUCTION.
4. THE EXISTING WIRING & TERMINATIONS TO THE GE 750 FEEDER MANAGEMENT RELAY SHALL REMAIN FOR CONNECTING THE NEW SEL MONITORING RELAYS.

ENGINEER OF RECORD:
BOB E. HALLMAN, P.E.
FLORIDA REGISTRATION NO. 20761

Engineering Design Technologies Corp.
P.O. Box 152403
Tampa, FL 33684-2403
813.289.8080
813.282.9184 FAX
engineering@edt1.com
Certificate of Authorization Number: 4795

CITY of TAMPA
WASTEWATER DEPARTMENT

HFC AWTP SWITCHGEAR BLDG.
PROTECTIVE RELAY REPLACEMENT

EXISTING SWITCHGEAR NO. 1 DEMOLITION
(SHEET 4 OF 4)

NO.	DATE	REVISIONS

DRAWN: STK
DESIGN: BEH
QC: BEH
DATE: 08/13/18

SHEET E-11

SWITCHGEAR NO. 1 WEST LINE-UP – "A" SECTION

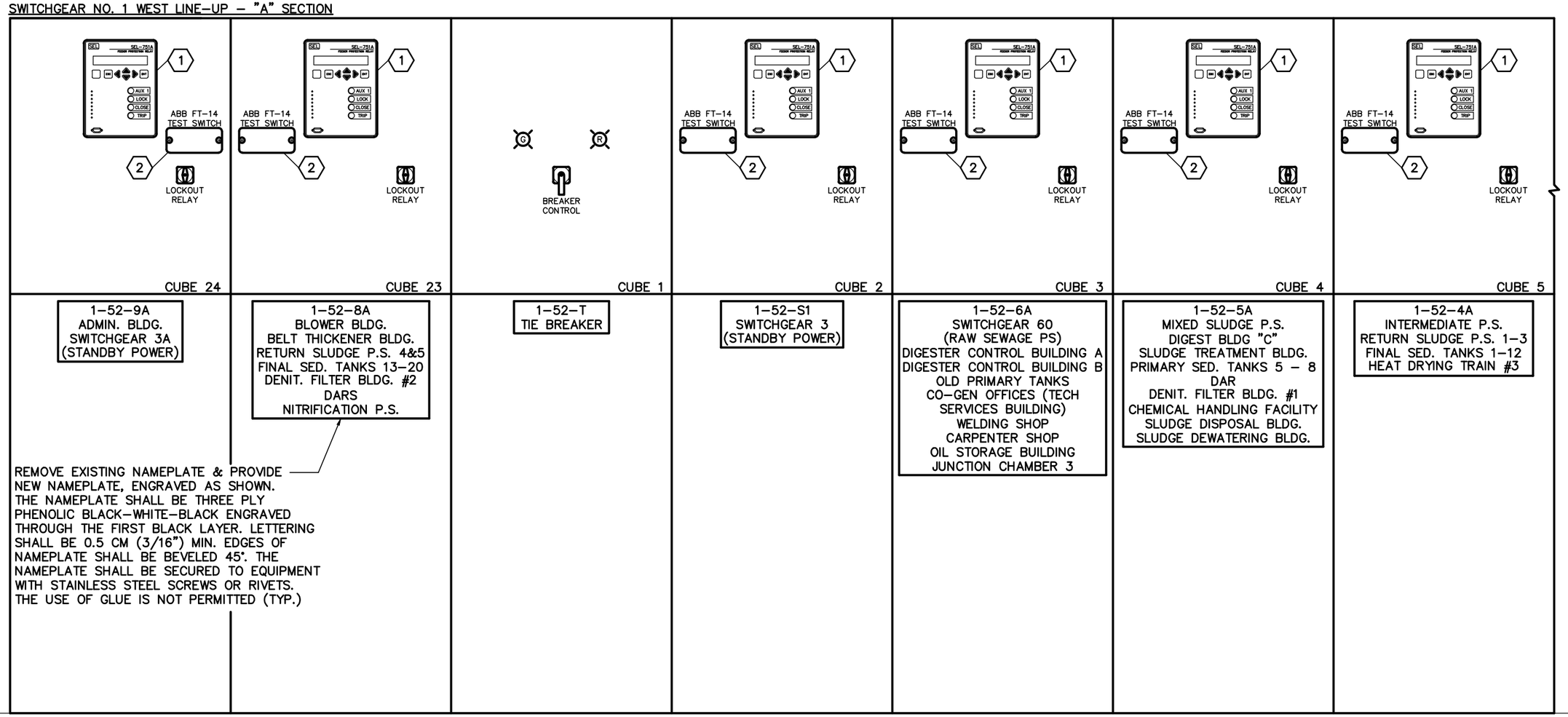

NOTES:

1. EXISTING INSTALLATIONS DENOTED ON THE DRAWINGS ARE FOR CONTRACTOR'S REFERENCE ONLY. ALL EXISTING INSTALLATIONS SHALL BE FIELD VERIFIED PRIOR TO COMMENCING CONSTRUCTION.
2. THE CONTRACTOR SHALL PROVIDE (1) SPARE SEL-751A FEEDER PROTECTION RELAY.

KEYED NOTES:

1. SCHWEITZER ENGINEERING LABORATORIES (SEL) SEL-751A FEEDER PROTECTION RELAY. PROVIDE PANEL-MOUNTING KIT AND MOUNT IN EXISTING SWITCHGEAR IN LOCATION SHOWN. REFERENCE SPECIFICATIONS.
2. ABB FLEXITEST SWITCH w/ CLEAR COVER, 8 CURRENT SHORTING (MAKE-BEFORE-BREAK) POLES w/ 6-RED HANDLES, 2-GREEN HANDLES, 6 POTENTIAL POLES w/ BLACK HANDLES, SCREW TERMINALS & STANDARD DEPTH. ABB FT-14 FLEXITEST SERIES SWITCH, ARRANGEMENT P1 P1 P1 P1 P1 P1 C5-C5 C2-C2 C2-C2 C2-C2

ENGINEER OF RECORD:
BOB E. HALLMAN, P.E.
FLORIDA REGISTRATION NO. 20761

Engineering Design Technologies Corp.
P.O. Box 152403
Tampa, FL 33684-2403
813.289.8080
813.282.9184 FAX
engineering@edt1.com
Certificate of Authorization Number: 4795

CITY of TAMPA
WASTEWATER DEPARTMENT

HFC AWTP SWITCHGEAR BLDG.
PROTECTIVE RELAY REPLACEMENT

EXISTING SWITCHGEAR NO. 1 MODIFICATIONS
(SHEET 1 OF 4)

NO.	DATE	REVISIONS

DRAWN: STK
DESIGN: BEH
QC: BEH
DATE: 08/13/18

SHEET E-12

SWITCHGEAR NO. 1 WEST LINE-UP – "A" SECTION

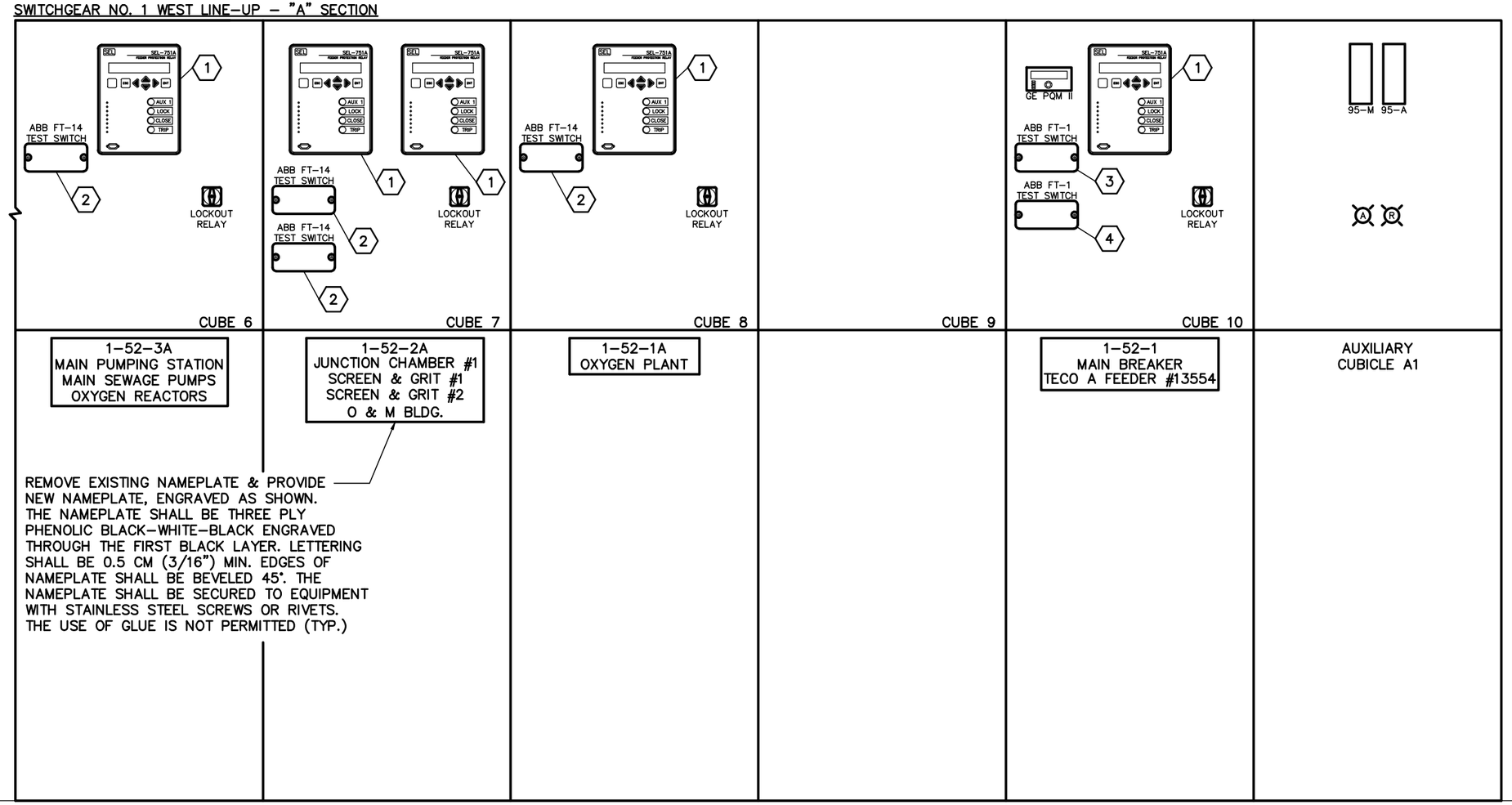

REMOVE EXISTING NAMEPLATE & PROVIDE NEW NAMEPLATE, ENGRAVED AS SHOWN. THE NAMEPLATE SHALL BE THREE PLY PHENOLIC BLACK–WHITE–BLACK ENGRAVED THROUGH THE FIRST BLACK LAYER. LETTERING SHALL BE 0.5 CM (3/16") MIN. EDGES OF NAMEPLATE SHALL BE BEVELED 45°. THE NAMEPLATE SHALL BE SECURED TO EQUIPMENT WITH STAINLESS STEEL SCREWS OR RIVETS. THE USE OF GLUE IS NOT PERMITTED (TYP.)

KEYED NOTES:

1. SCHWEITZER ENGINEERING LABORATORIES (SEL) SEL–751A FEEDER PROTECTION RELAY. PROVIDE PANEL–MOUNTING KIT AND MOUNT IN EXISTING SWITCHGEAR IN LOCATION SHOWN. REFERENCE SPECIFICATIONS.

2. ABB FLEXITEST SWITCH w/ CLEAR COVER, 8 CURRENT SHORTING (MAKE–BEFORE–BREAK) POLES w/ 6–RED HANDLES, 2–GREEN HANDLES & 6 POTENTIAL POLES w/ BLACK HANDLES. ABB FT–14 FLEXITEST SERIES SWITCH, ARRANGEMENT P1 P1 P1 P1 P1 P1 C5–C5 C2–C2 C2–C2 C2–C2

3. ABB FLEXITEST SWITCH w/ CLEAR COVER, 10 CURRENT SHORTING (MAKE–BEFORE–BREAK) POLES w/ 6–RED HANDLES, 2–GREEN HANDLES & 2–ORANGE HANDLES ABB FT–1 FLEXITEST SERIES SWITCH, ARRANGEMENT C9–C9 C5–C5 C2–C2 C2–C2 C2–C2

4. ABB FLEXITEST SWITCH w/ CLEAR COVER, 10 POTENTIAL POLES w/ BLACK HANDLES. ABB FT–1 FLEXITEST SERIES SWITCH, STYLE C129A501G01

NOTES:

1. EXISTING INSTALLATIONS DENOTED ON THE DRAWINGS ARE FOR CONTRACTOR'S REFERENCE ONLY. ALL EXISTING INSTALLATIONS SHALL BE FIELD VERIFIED PRIOR TO COMMENCING CONSTRUCTION.

ENGINEER OF RECORD:
BOB E. HALLMAN, P.E.
FLORIDA REGISTRATION NO. 20761

Engineering Design Technologies Corp.
P.O. Box 152403
Tampa, FL 33684-2403
813.289.8080
813.282.9184 FAX
engineering@edt1.com
Certificate of Authorization Number: 4795

CITY of TAMPA
WASTEWATER DEPARTMENT

HFC AWTP SWITCHGEAR BLDG.
PROTECTIVE RELAY REPLACEMENT

EXISTING SWITCHGEAR NO. 1 MODIFICATIONS
(SHEET 2 OF 4)

NO.	DATE	REVISIONS

DRAWN: STK
DESIGN: BEH
QC: BEH
DATE: 08/13/18

SHEET E-13

SWITCHGEAR NO. 1 EAST LINE-UP – "B" SECTION

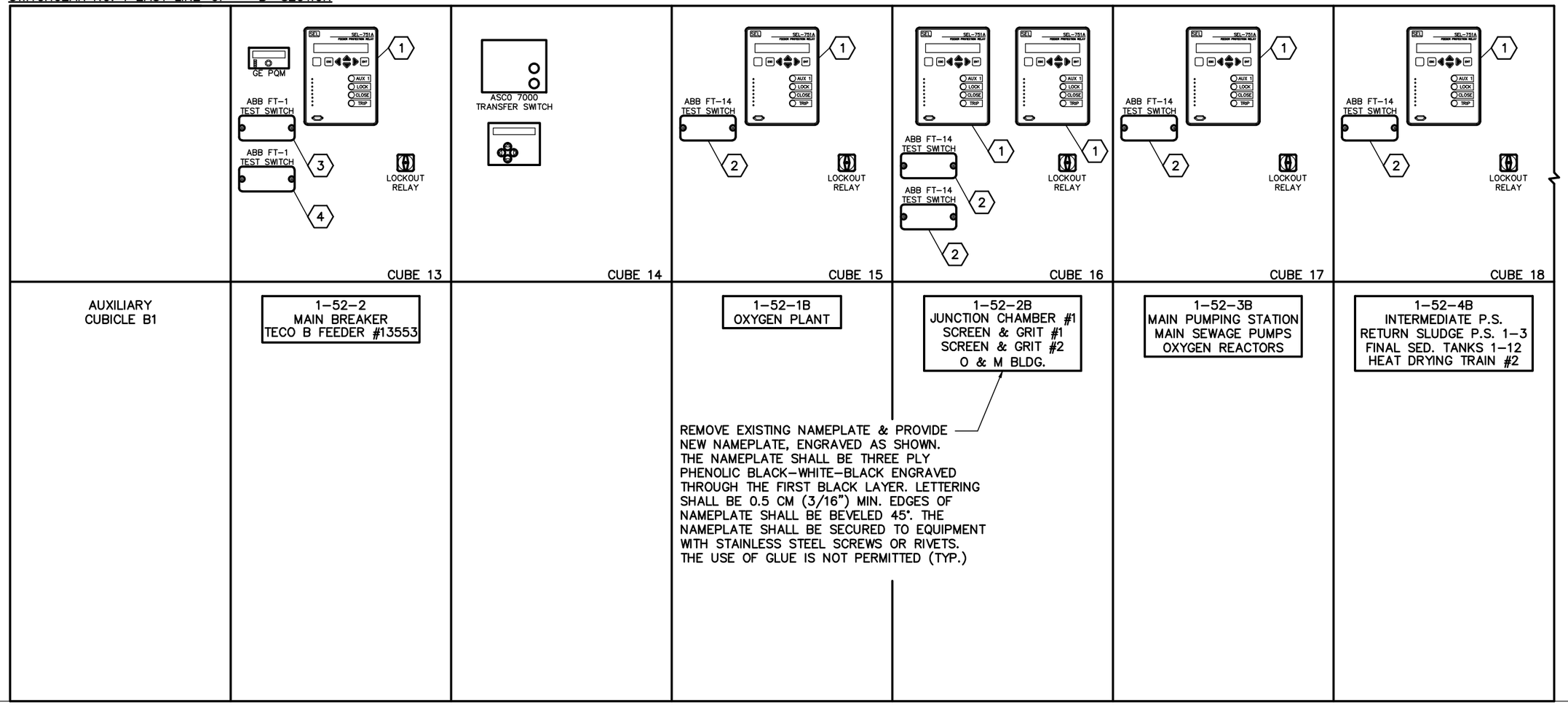

KEYED NOTES:

1. SCHWEITZER ENGINEERING LABORATORIES (SEL) SEL-751A FEEDER PROTECTION RELAY. PROVIDE PANEL-MOUNTING KIT AND MOUNT IN EXISTING SWITCHGEAR IN LOCATION SHOWN. REFERENCE SPECIFICATIONS.

2. ABB FLEXITEST SWITCH w/ CLEAR COVER, 8 CURRENT SHORTING (MAKE-BEFORE-BREAK) POLES w/ 6-RED HANDLES, 2-GREEN HANDLES, 6 POTENTIAL POLES w/ BLACK HANDLES, SCREW TERMINALS & STANDARD DEPTH. ABB FT-14 FLEXITEST SERIES SWITCH, ARRANGEMENT P1 P1 P1 P1 P1 P1 C5-C5 C2-C2 C2-C2 C2-C2

3. ABB FLEXITEST SWITCH w/ CLEAR COVER, 10 CURRENT SHORTING (MAKE-BEFORE-BREAK) POLES w/ 6-RED HANDLES, 2-GREEN HANDLES & 2-ORANGE HANDLES ABB FT-1 FLEXITEST SERIES SWITCH, ARRANGEMENT C9-C9 C5-C5 C2-C2 C2-C2 C2-C2

4. ABB FLEXITEST SWITCH w/ CLEAR COVER, 10 POTENTIAL POLES w/ BLACK HANDLES. ABB FT-1 FLEXITEST SERIES SWITCH, STYLE C129A501G01

NOTES:

1. EXISTING INSTALLATIONS DENOTED ON THE DRAWINGS ARE FOR CONTRACTOR'S REFERENCE ONLY. ALL EXISTING INSTALLATIONS SHALL BE FIELD VERIFIED PRIOR TO COMMENCING CONSTRUCTION.

ENGINEER OF RECORD:
BOB E. HALLMAN, P.E.
FLORIDA REGISTRATION NO. 20761

Engineering Design Technologies Corp.
P.O. Box 152403
Tampa, FL 33684-2403
813.289.8080
813.282.9184 FAX
engineering@edt1.com
Certificate of Authorization Number: 4795

CITY of TAMPA
WASTEWATER DEPARTMENT

HFC AWTP SWITCHGEAR BLDG.
PROTECTIVE RELAY REPLACEMENT

EXISTING SWITCHGEAR NO. 1 MODIFICATIONS
(SHEET 3 OF 4)

NO.	DATE	REVISIONS

DRAWN: STK
DESIGN: BEH
QC: BEH
DATE: 08/13/18

SHEET E-14

SWITCHGEAR NO. 1 EAST LINE-UP – "B" SECTION

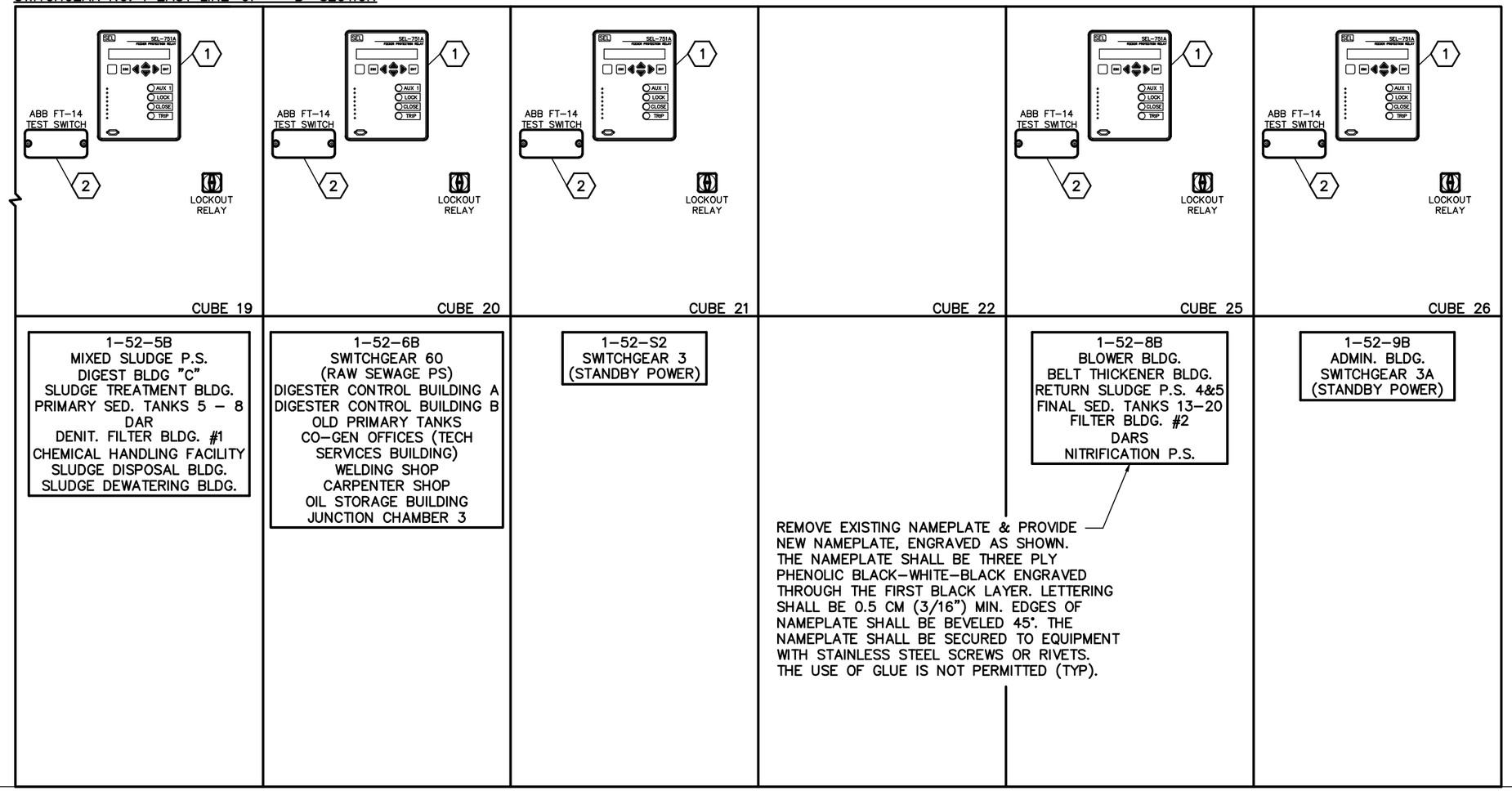

NOTES:

1. EXISTING INSTALLATIONS DENOTED ON THE DRAWINGS ARE FOR CONTRACTOR'S REFERENCE ONLY. ALL EXISTING INSTALLATIONS SHALL BE FIELD VERIFIED PRIOR TO COMMENCING CONSTRUCTION.

KEYED NOTES:

1. SCHWEITZER ENGINEERING LABORATORIES (SEL) SEL-751A FEEDER PROTECTION RELAY. PROVIDE PANEL-MOUNTING KIT AND MOUNT IN EXISTING SWITCHGEAR IN LOCATION SHOWN. REFERENCE SPECIFICATIONS.

2. ABB FLEXITEST SWITCH w/ CLEAR COVER, 8 CURRENT SHORTING (MAKE-BEFORE-BREAK) POLES w/ 6-RED HANDLES, 2-GREEN HANDLES, 6 POTENTIAL POLES w/ BLACK HANDLES, SCREW TERMINALS & STANDARD DEPTH. ABB FT-14 FLEXITEST SERIES SWITCH, ARRANGEMENT P1 P1 P1 P1 P1 P1 C5-C5 C2-C2 C2-C2 C2-C2

ENGINEER OF RECORD:
BOB E. HALLMAN, P.E.
FLORIDA REGISTRATION NO. 20761

Engineering Design Technologies Corp.
P.O. Box 152403
Tampa, FL 33684-2403
813.289.8080
813.282.9184 FAX
engineering@edt1.com
Certificate of Authorization Number: 4795

CITY of TAMPA
WASTEWATER DEPARTMENT

HFC AWTP SWITCHGEAR BLDG.
PROTECTIVE RELAY REPLACEMENT

EXISTING SWITCHGEAR NO. 1 MODIFICATIONS
(SHEET 4 OF 4)

NO.	DATE	REVISIONS

DRAWN: STK
DESIGN: BEH
QC: BEH
DATE: 08/13/18

SHEET E-15

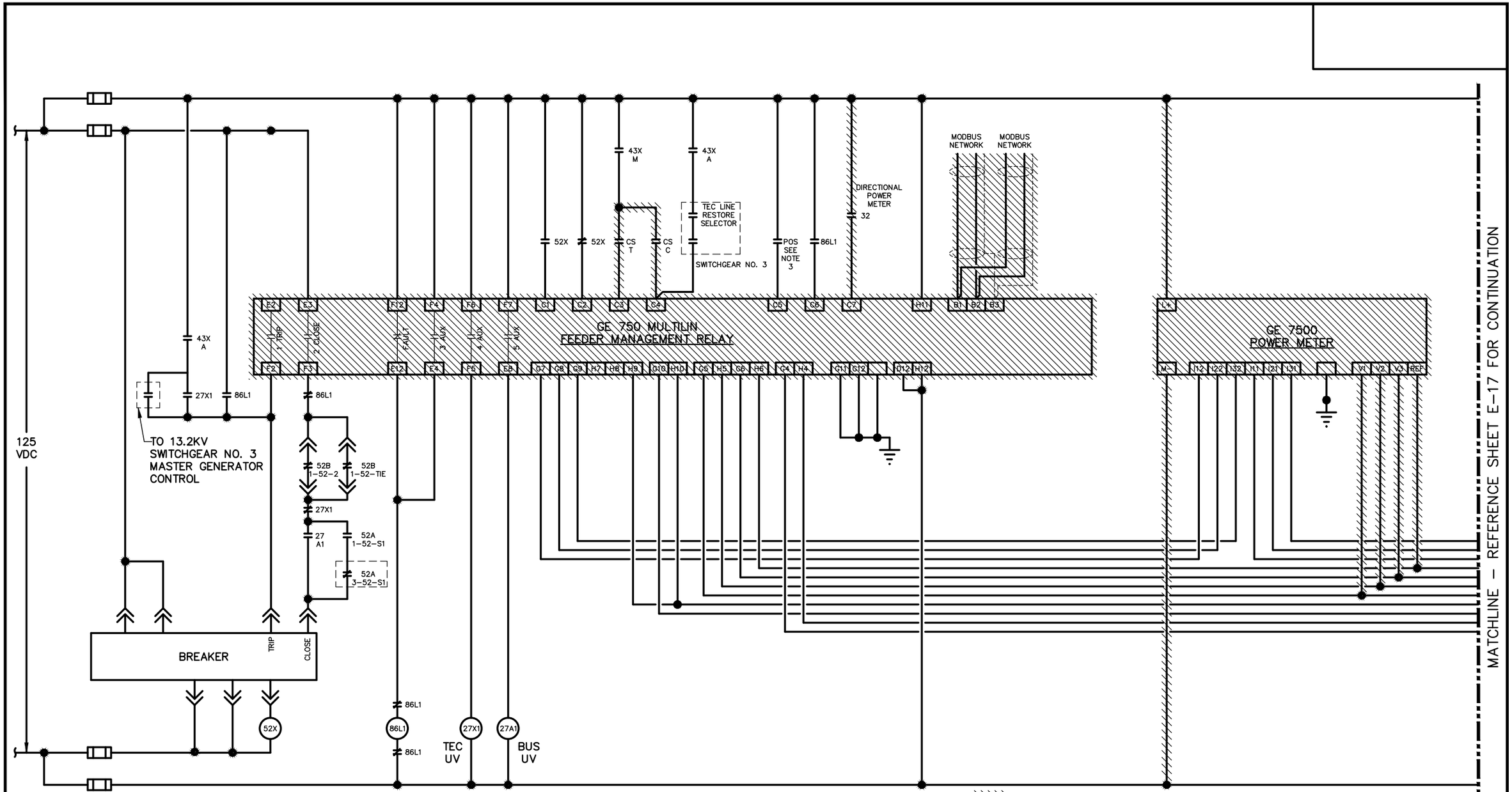

NOTES:

1. EXISTING INSTALLATIONS DENOTED ON THE DRAWINGS ARE FOR CONTRACTOR'S REFERENCE ONLY. ALL EXISTING INSTALLATIONS SHALL BE FIELD VERIFIED PRIOR TO COMMENCING CONSTRUCTION.
2. THE ENTIRE LENGTH OF WIRING SHALL BE REMOVED FOR ANY LENGTH OF WIRING THAT IS SHOWN TO BE REMOVED
3. TRUCK OPERATED BREAKER POSITION SWITCH.

– DENOTES EXISTING DEVICE AND WIRING TO BE REMOVED. ITEM SHALL BE REMOVED FROM PREMISES AND DISPOSED OF PROPERLY, UNLESS OTHERWISE NOTED. UNLESS SPECIFICALLY SHOWN OTHERWISE, ALL EXISTING WIRING CONNECTED TO THE DEVICES SHOWN SHALL REMAIN AND SHALL BE RE–CONNECTED AS SHOWN IN THE DRAWINGS. REMOVE ALL WIRING WHERE INDICATED. PROVIDE A BLANK COVERPLATE TO COVER ANY OPENING RESULTING FROM A DEVICE BEING REMOVED FROM THE EXISTING SWITCHGEAR AND THE DEVICE IS NOT BEING REPLACED.

ENGINEER OF RECORD:
BOB E. HALLMAN, P.E.
FLORIDA REGISTRATION NO. 20761

Engineering Design Technologies Corp.
P.O. Box 152403
Tampa, FL 33684-2403
813.289.8080
813.282.9184 FAX
engineering@edt1.com

Certificate of Authorization Number: 4795

CITY of TAMPA
WASTEWATER DEPARTMENT

HFC AWTP SWITCHGEAR BLDG.
PROTECTIVE RELAY REPLACEMENT

EXISTING SWITCHGEAR NO. 1 1–52–1 MAIN
GE 750 FEEDER MANAGEMENT
RELAY WIRING DIAGRAM (SHEET 1 OF 3)

NO.	DATE	REVISIONS

DRAWN: STK
DESIGN: BEH
QC: BEH
DATE: 08/13/18

SHEET E-16

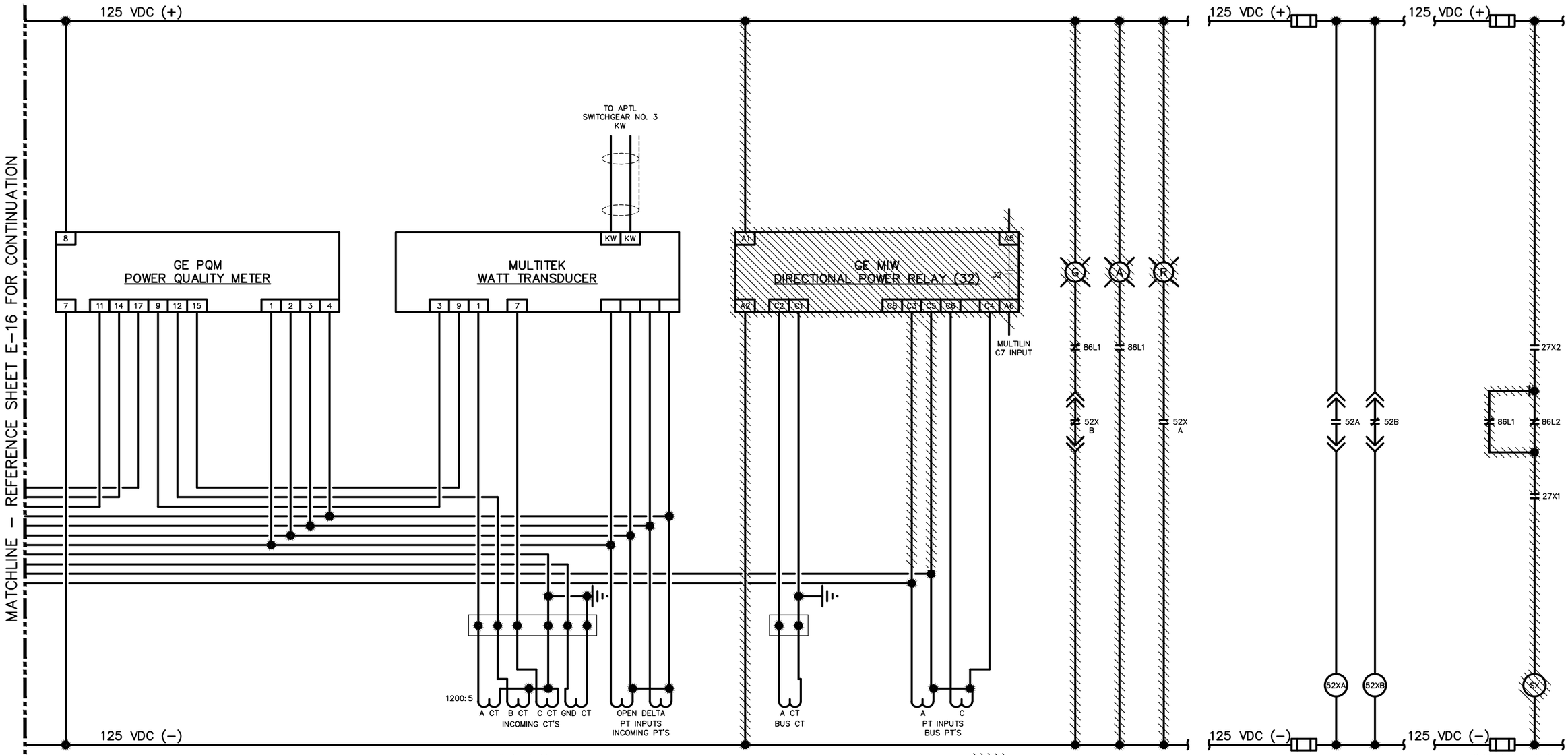

NOTES:

1. EXISTING INSTALLATIONS DENOTED ON THE DRAWINGS ARE FOR CONTRACTOR'S REFERENCE ONLY. ALL EXISTING INSTALLATIONS SHALL BE FIELD VERIFIED PRIOR TO COMMENCING CONSTRUCTION.

2. THE ENTIRE LENGTH OF WIRING SHALL BE REMOVED FOR ANY LENGTH OF WIRING THAT IS SHOWN TO BE REMOVED

– DENOTES EXISTING DEVICE AND WIRING TO BE REMOVED. ITEM SHALL BE REMOVED FROM PREMISES AND DISPOSED OF PROPERLY, UNLESS OTHERWISE NOTED. UNLESS SPECIFICALLY SHOWN OTHERWISE, ALL EXISTING WIRING CONNECTED TO THE DEVICES SHOWN SHALL REMAIN AND SHALL BE RE-CONNECTED AS SHOWN IN THE DRAWINGS. REMOVE ALL WIRING WHERE INDICATED. PROVIDE A BLANK COVERPLATE TO COVER ANY OPENING RESULTING FROM A DEVICE BEING REMOVED FROM THE EXISTING SWITCHGEAR AND THE DEVICE IS NOT BEING REPLACED.

ENGINEER OF RECORD:
BOB E. HALLMAN, P.E.
FLORIDA REGISTRATION NO. 20761

Engineering Design Technologies Corp.
P.O. Box 152403
Tampa, FL 33684-2403
813.289.8080
813.282.9184 FAX
engineering@edt1.com
Certificate of Authorization Number: 4795

CITY of TAMPA
WASTEWATER DEPARTMENT

HFC AWTP SWITCHGEAR BLDG.
PROTECTIVE RELAY REPLACEMENT

EXISTING SWITCHGEAR NO. 1 1-52-1 MAIN
GE 750 FEEDER MANAGEMENT
RELAY WIRING DIAGRAM (SHEET 2 OF 3)

NO.	DATE	REVISIONS

DRAWN: STK
DESIGN: BEH
QC: BEH
DATE: 08/13/18

SHEET E-17

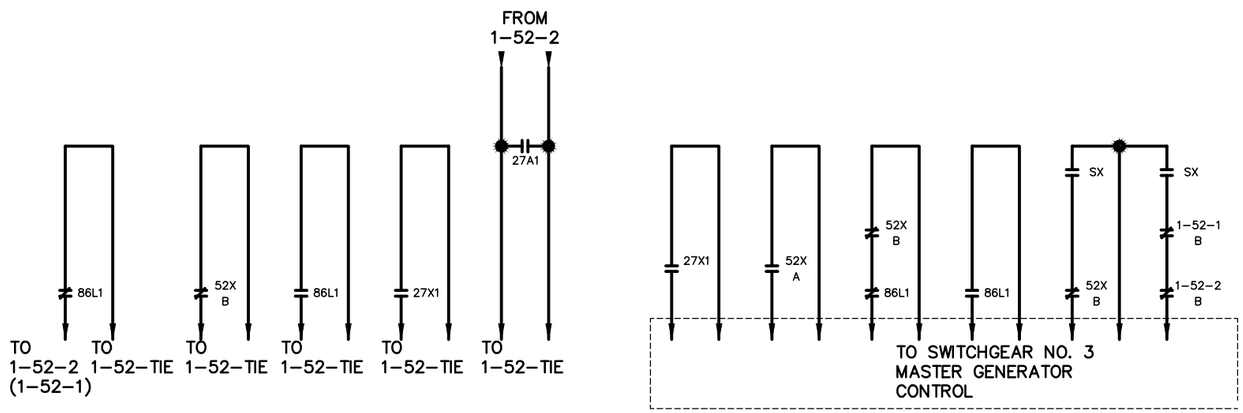

NOTES:

1. EXISTING INSTALLATIONS DENOTED ON THE DRAWINGS ARE FOR CONTRACTOR'S REFERENCE ONLY. ALL EXISTING INSTALLATIONS SHALL BE FIELD VERIFIED PRIOR TO COMMENCING CONSTRUCTION.

ENGINEER OF RECORD:
BOB E. HALLMAN, P.E.
FLORIDA REGISTRATION NO. 20761

Engineering Design Technologies Corp.
P.O. Box 152403
Tampa, FL 33684-2403
813.289.8080
813.282.9184 FAX
engineering@edt1.com
Certificate of Authorization Number: 4795

CITY of TAMPA
WASTEWATER DEPARTMENT

HFC AWTP SWITCHGEAR BLDG.
PROTECTIVE RELAY REPLACEMENT

EXISTING SWITCHGEAR NO. 1 1–52–1 MAIN
GE 750 FEEDER MANAGEMENT
RELAY WIRING DIAGRAM (SHEET 3 OF 3)

NO.	DATE	REVISIONS

DRAWN: STK
DESIGN: BEH
QC: BEH
DATE: 08/13/18

SHEET E-18

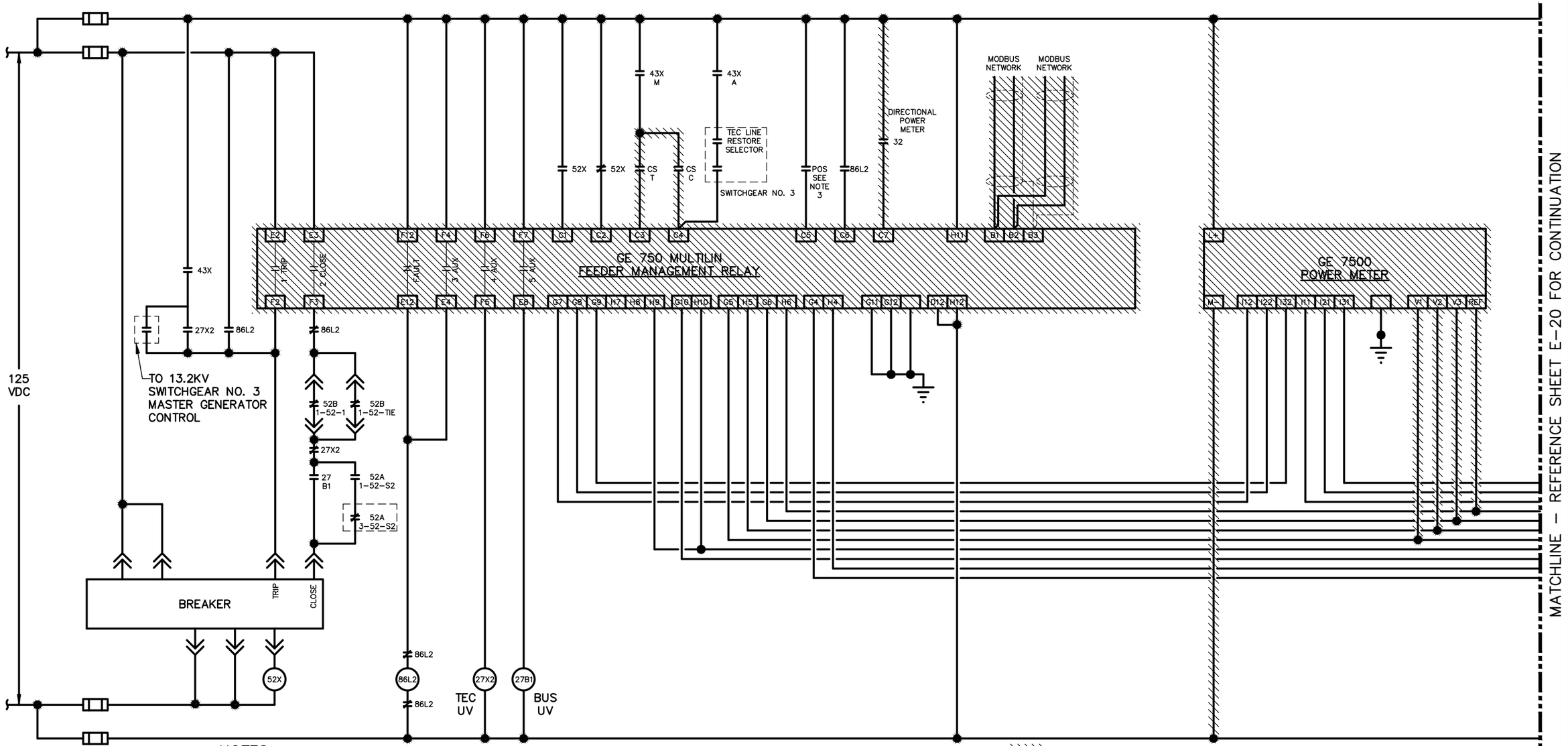

NOTES:

1. EXISTING INSTALLATIONS DENOTED ON THE DRAWINGS ARE FOR CONTRACTOR'S REFERENCE ONLY. ALL EXISTING INSTALLATIONS SHALL BE FIELD VERIFIED PRIOR TO COMMENCING CONSTRUCTION.
2. THE ENTIRE LENGTH OF WIRING SHALL BE REMOVED FOR ANY LENGTH OF WIRING THAT IS SHOWN TO BE REMOVED
3. TRUCK OPERATED BREAKER POSITION SWITCH.

– DENOTES EXISTING DEVICE AND WIRING TO BE REMOVED. ITEM SHALL BE REMOVED FROM PREMISES AND DISPOSED OF PROPERLY, UNLESS OTHERWISE NOTED. UNLESS SPECIFICALLY SHOWN OTHERWISE, ALL EXISTING WIRING CONNECTED TO THE DEVICES SHOWN SHALL REMAIN AND SHALL BE RE-CONNECTED AS SHOWN IN THE DRAWINGS. REMOVE ALL WIRING WHERE INDICATED. PROVIDE A BLANK COVERPLATE TO COVER ANY OPENING RESULTING FROM A DEVICE BEING REMOVED FROM THE EXISTING SWITCHGEAR AND THE DEVICE IS NOT BEING REPLACED.

ENGINEER OF RECORD:
BOB E. HALLMAN, P.E.
FLORIDA REGISTRATION NO. 20761

Engineering Design Technologies Corp.
P.O. Box 152403
Tampa, FL 33684-2403
813.289.8080
813.282.9184 FAX
engineering@edt1.com
Certificate of Authorization Number: 4795

CITY of TAMPA
WASTEWATER DEPARTMENT

HFC AWTP SWITCHGEAR BLDG.
PROTECTIVE RELAY REPLACEMENT

EXISTING SWITCHGEAR NO. 1 1-52-2 MAIN
GE 750 FEEDER MANAGEMENT
RELAY WIRING DIAGRAM (SHEET 1 OF 3)

NO.	DATE	REVISIONS

DRAWN: STK
DESIGN: BEH
QC: BEH
DATE: 08/13/18

SHEET E-19

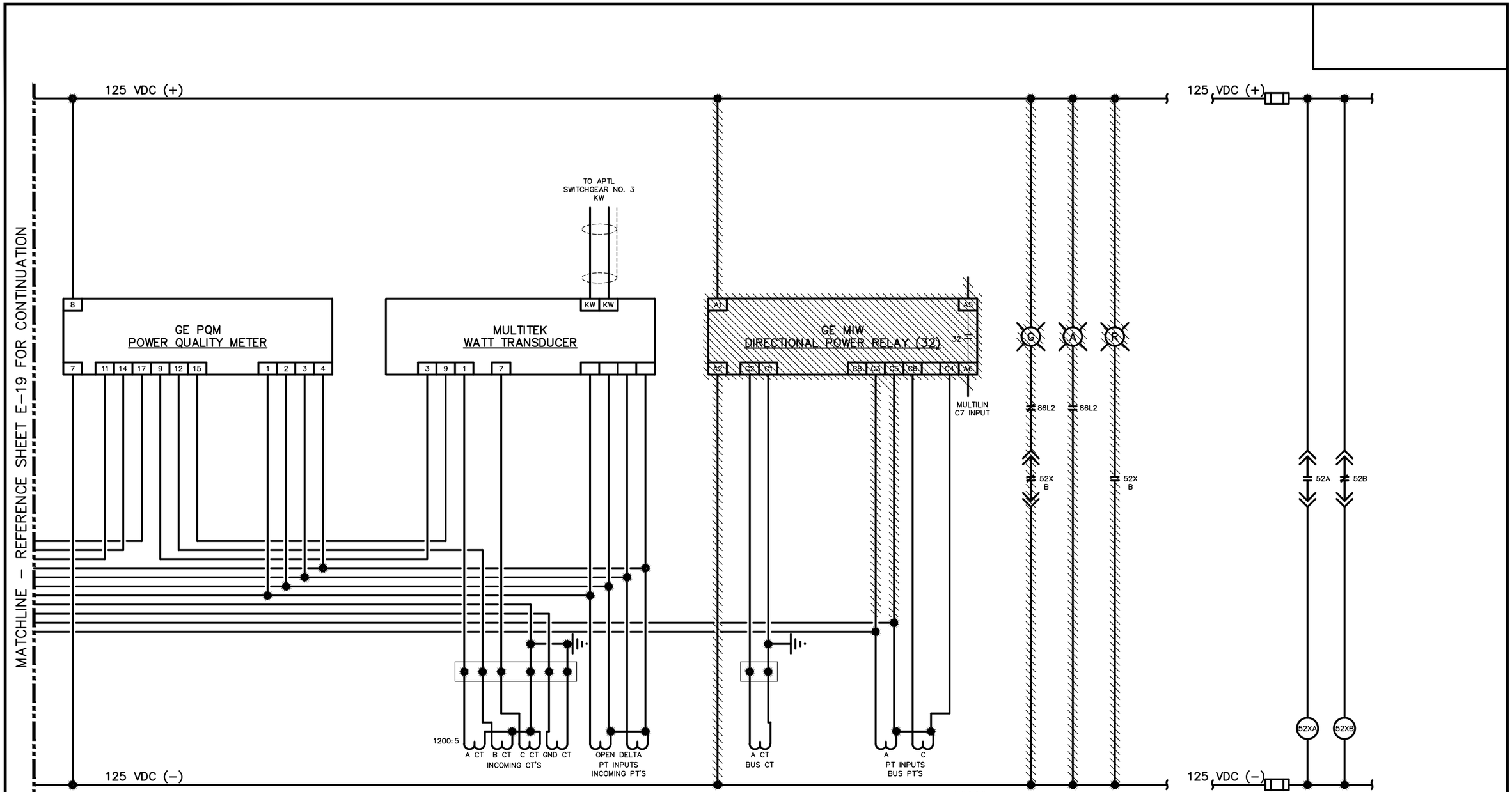

NOTES:

1. EXISTING INSTALLATIONS DENOTED ON THE DRAWINGS ARE FOR CONTRACTOR'S REFERENCE ONLY. ALL EXISTING INSTALLATIONS SHALL BE FIELD VERIFIED PRIOR TO COMMENCING CONSTRUCTION.

2. THE ENTIRE LENGTH OF WIRING SHALL BE REMOVED FOR ANY LENGTH OF WIRING THAT IS SHOWN TO BE REMOVED

– DENOTES EXISTING DEVICE AND WIRING TO BE REMOVED. ITEM SHALL BE REMOVED FROM PREMISES AND DISPOSED OF PROPERLY, UNLESS OTHERWISE NOTED. UNLESS SPECIFICALLY SHOWN OTHERWISE, ALL EXISTING WIRING CONNECTED TO THE DEVICES SHOWN SHALL REMAIN AND SHALL BE RE–CONNECTED AS SHOWN IN THE DRAWINGS. REMOVE ALL WIRING WHERE INDICATED. PROVIDE A BLANK COVERPLATE TO COVER ANY OPENING RESULTING FROM A DEVICE BEING REMOVED FROM THE EXISTING SWITCHGEAR AND THE DEVICE IS NOT BEING REPLACED.

ENGINEER OF RECORD:
BOB E. HALLMAN, P.E.
FLORIDA REGISTRATION NO. 20761

Engineering Design Technologies Corp.
P.O. Box 152403
Tampa, FL 33684-2403
813.289.8080
813.282.9184 FAX
engineering@edt1.com

Certificate of Authorization Number: 4795

CITY of TAMPA
WASTEWATER DEPARTMENT

HFC AWTP SWITCHGEAR BLDG.
PROTECTIVE RELAY REPLACEMENT

EXISTING SWITCHGEAR NO. 1 1–52–2 MAIN
GE 750 FEEDER MANAGEMENT
RELAY WIRING DIAGRAM (SHEET 2 OF 3)

NO.	DATE	REVISIONS

DRAWN: STK
DESIGN: BEH
QC: BEH
DATE: 08/13/18

SHEET E-20

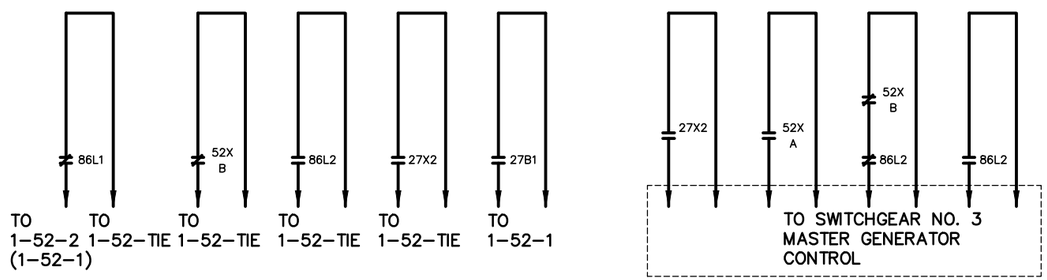

NOTES:

1. EXISTING INSTALLATIONS DENOTED ON THE DRAWINGS ARE FOR CONTRACTOR'S REFERENCE ONLY. ALL EXISTING INSTALLATIONS SHALL BE FIELD VERIFIED PRIOR TO COMMENCING CONSTRUCTION.

ENGINEER OF RECORD:
BOB E. HALLMAN, P.E.
FLORIDA REGISTRATION NO. 20761

Engineering Design Technologies Corp.
P.O. Box 152403
Tampa, FL 33684-2403
813.289.8080
813.282.9184 FAX
engineering@edt1.com
Certificate of Authorization Number: 4795

CITY of TAMPA
WASTEWATER DEPARTMENT

HFC AWTP SWITCHGEAR BLDG.
PROTECTIVE RELAY REPLACEMENT

EXISTING SWITCHGEAR NO. 1 1-52-2 MAIN
GE 750 FEEDER MANAGEMENT
RELAY WIRING DIAGRAM (SHEET 3 OF 3)

NO.	DATE	REVISIONS

DRAWN: STK
DESIGN: BEH
QC: BEH
DATE: 08/13/18

SHEET E-21

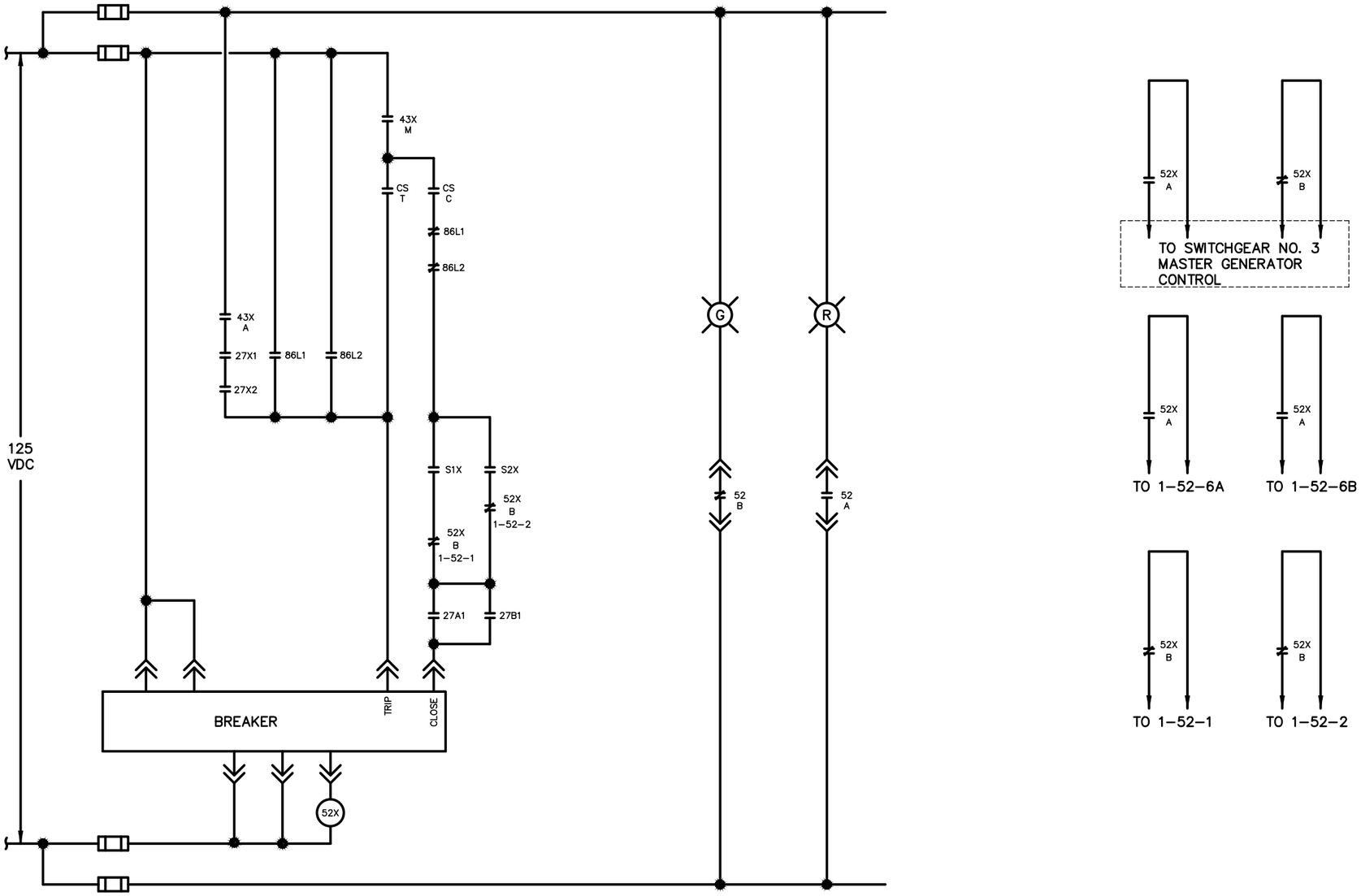

NOTES:

1. EXISTING INSTALLATIONS DENOTED ON THE DRAWINGS ARE FOR CONTRACTOR'S REFERENCE ONLY. ALL EXISTING INSTALLATIONS SHALL BE FIELD VERIFIED PRIOR TO COMMENCING CONSTRUCTION.

ENGINEER OF RECORD:
BOB E. HALLMAN, P.E.
FLORIDA REGISTRATION NO. 20761

Engineering Design Technologies Corp.
P.O. Box 152403
Tampa, FL 33684-2403
813.289.8080
813.282.9184 FAX
engineering@edt1.com
Certificate of Authorization Number: 4795

CITY of TAMPA
WASTEWATER DEPARTMENT

HFC AWTP SWITCHGEAR BLDG.
PROTECTIVE RELAY REPLACEMENT

EXISTING SWITCHGEAR NO. 1 1-52-TIE
WIRING DIAGRAM

NO.	DATE	REVISIONS

DRAWN: STK
DESIGN: BEH
QC: BEH
DATE: 08/13/18

SHEET E-22

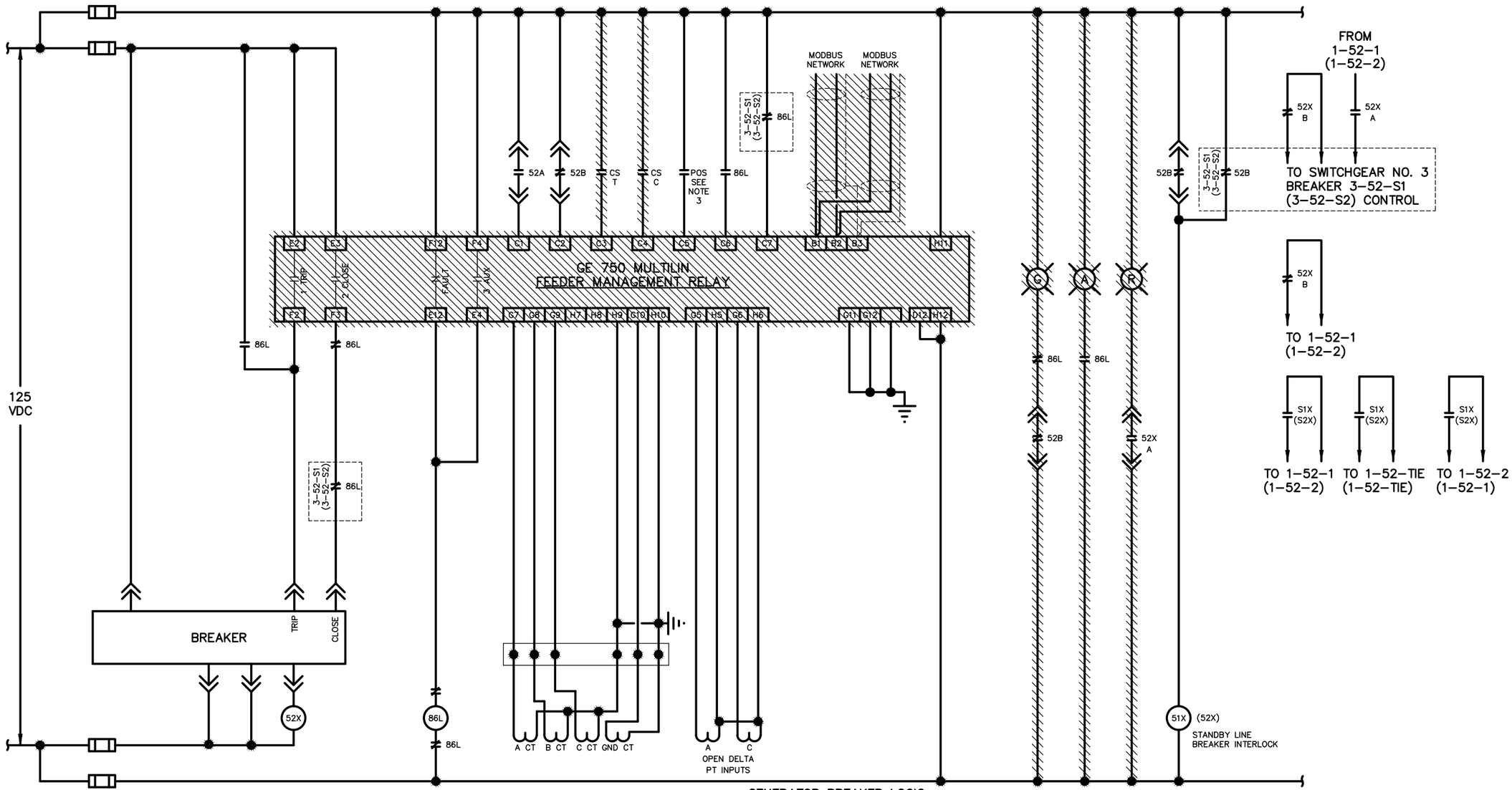

GENERATOR BREAKER LOGIC
1-52-S1 & (1-52-S2)

NOTES:

1. EXISTING INSTALLATIONS DENOTED ON THE DRAWINGS ARE FOR CONTRACTOR'S REFERENCE ONLY. ALL EXISTING INSTALLATIONS SHALL BE FIELD VERIFIED PRIOR TO COMMENCING CONSTRUCTION.

2. THE ENTIRE LENGTH OF WIRING SHALL BE REMOVED FOR ANY LENGTH OF WIRING THAT IS SHOWN TO BE REMOVED

3. TRUCK OPERATED BREAKER POSITION SWITCH.

– DENOTES EXISTING DEVICE AND WIRING TO BE REMOVED. ITEM SHALL BE REMOVED FROM PREMISES AND DISPOSED OF PROPERLY, UNLESS OTHERWISE NOTED. UNLESS SPECIFICALLY SHOWN OTHERWISE, ALL EXISTING WIRING CONNECTED TO THE DEVICES SHOWN SHALL REMAIN AND SHALL BE RE-CONNECTED AS SHOWN IN THE DRAWINGS. REMOVE ALL WIRING WHERE INDICATED. PROVIDE A BLANK COVERPLATE TO COVER ANY OPENING RESULTING FROM A DEVICE BEING REMOVED FROM THE EXISTING SWITCHGEAR AND THE DEVICE IS NOT BEING REPLACED.

ENGINEER OF RECORD:
BOB E. HALLMAN, P.E.
FLORIDA REGISTRATION NO. 20761

Engineering Design Technologies Corp.
P.O. Box 152403
Tampa, FL 33684-2403
813.289.8080
813.282.9184 FAX
engineering@edt1.com

Certificate of Authorization Number: 4795

CITY of TAMPA
WASTEWATER DEPARTMENT

HFC AWTP SWITCHGEAR BLDG.
PROTECTIVE RELAY REPLACEMENT

EXISTING SWITCHGEAR NO. 1 1-52-S1 & 1-52-S2 GE 750 FEEDER MANAGEMENT RELAY WIRING DIAGRAM

NO.	DATE	REVISIONS

DRAWN: STK
DESIGN: BEH
QC: BEH
DATE: 08/13/18

SHEET E-23

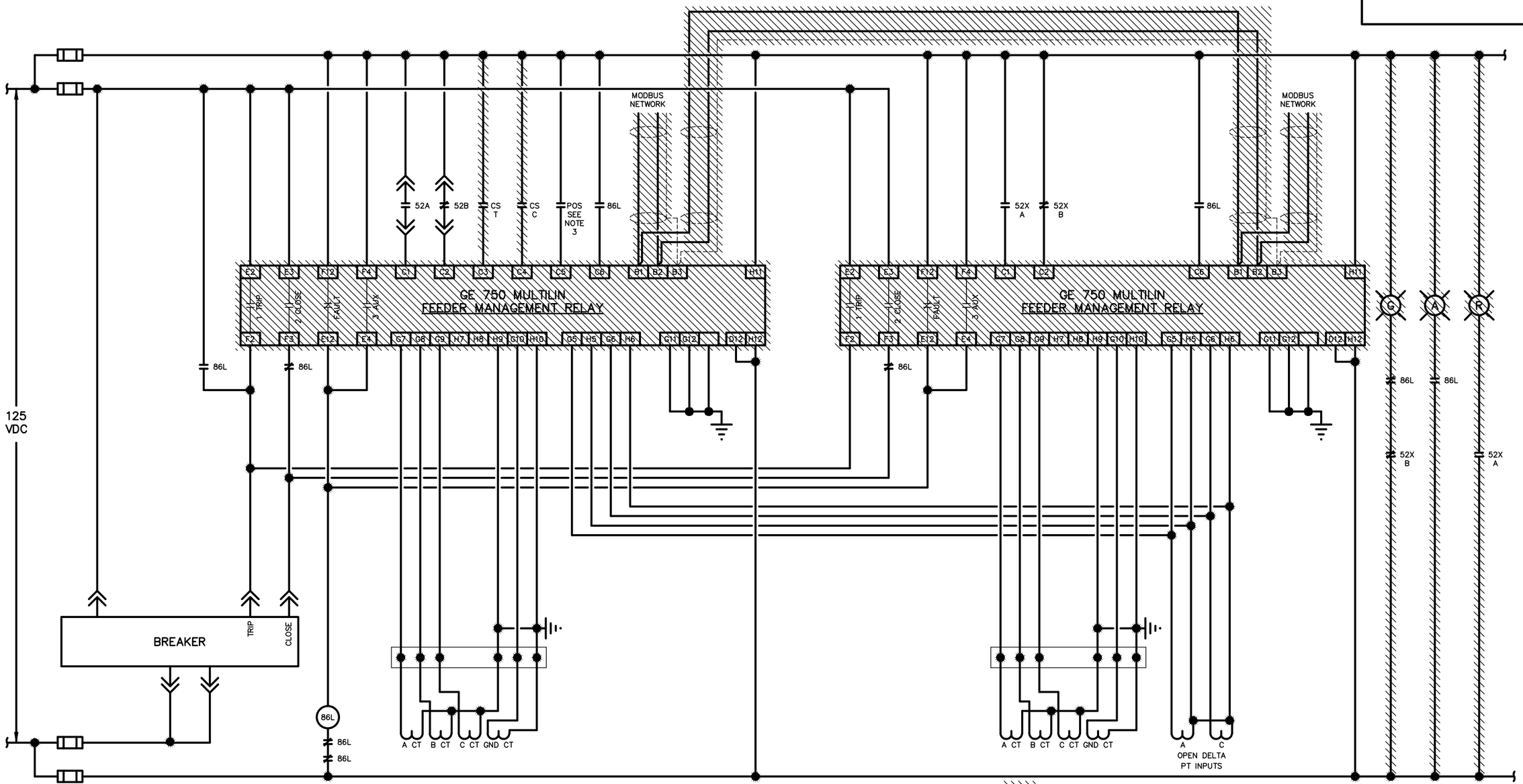

NOTES:

1. EXISTING INSTALLATIONS DENOTED ON THE DRAWINGS ARE FOR CONTRACTOR'S REFERENCE ONLY. ALL EXISTING INSTALLATIONS SHALL BE FIELD VERIFIED PRIOR TO COMMENCING CONSTRUCTION.
2. THE ENTIRE LENGTH OF WIRING SHALL BE REMOVED FOR ANY LENGTH OF WIRING THAT IS SHOWN TO BE REMOVED
3. TRUCK OPERATED BREAKER POSITION SWITCH.

– DENOTES EXISTING DEVICE AND WIRING TO BE REMOVED. ITEM SHALL BE REMOVED FROM PREMISES AND DISPOSED OF PROPERLY, UNLESS OTHERWISE NOTED. UNLESS SPECIFICALLY SHOWN OTHERWISE, ALL EXISTING WIRING CONNECTED TO THE DEVICES SHOWN SHALL REMAIN AND SHALL BE RE–CONNECTED AS SHOWN IN THE DRAWINGS. REMOVE ALL WIRING WHERE INDICATED. PROVIDE A BLANK COVERPLATE TO COVER ANY OPENING RESULTING FROM A DEVICE BEING REMOVED FROM THE EXISTING SWITCHGEAR AND THE DEVICE IS NOT BEING REPLACED.

ENGINEER OF RECORD:
BOB E. HALLMAN, P.E.
FLORIDA REGISTRATION NO. 20761

Engineering Design Technologies Corp.
P.O. Box 152403
Tampa, FL 33684-2403
813.289.8080
813.282.9184 FAX
engineering@edt1.com

Certificate of Authorization Number: 4795

CITY of TAMPA
WASTEWATER DEPARTMENT

HFC AWTP SWITCHGEAR BLDG.
PROTECTIVE RELAY REPLACEMENT

EXISTING SWITCHGEAR NO. 1 1–52–2A & 1–52–2B GE 750 FEEDER MANAGEMENT RELAY WIRING DIAGRAM

NO.	DATE	REVISIONS

DRAWN: STK
DESIGN: BEH
QC: BEH
DATE: 08/13/18

SHEET E-24

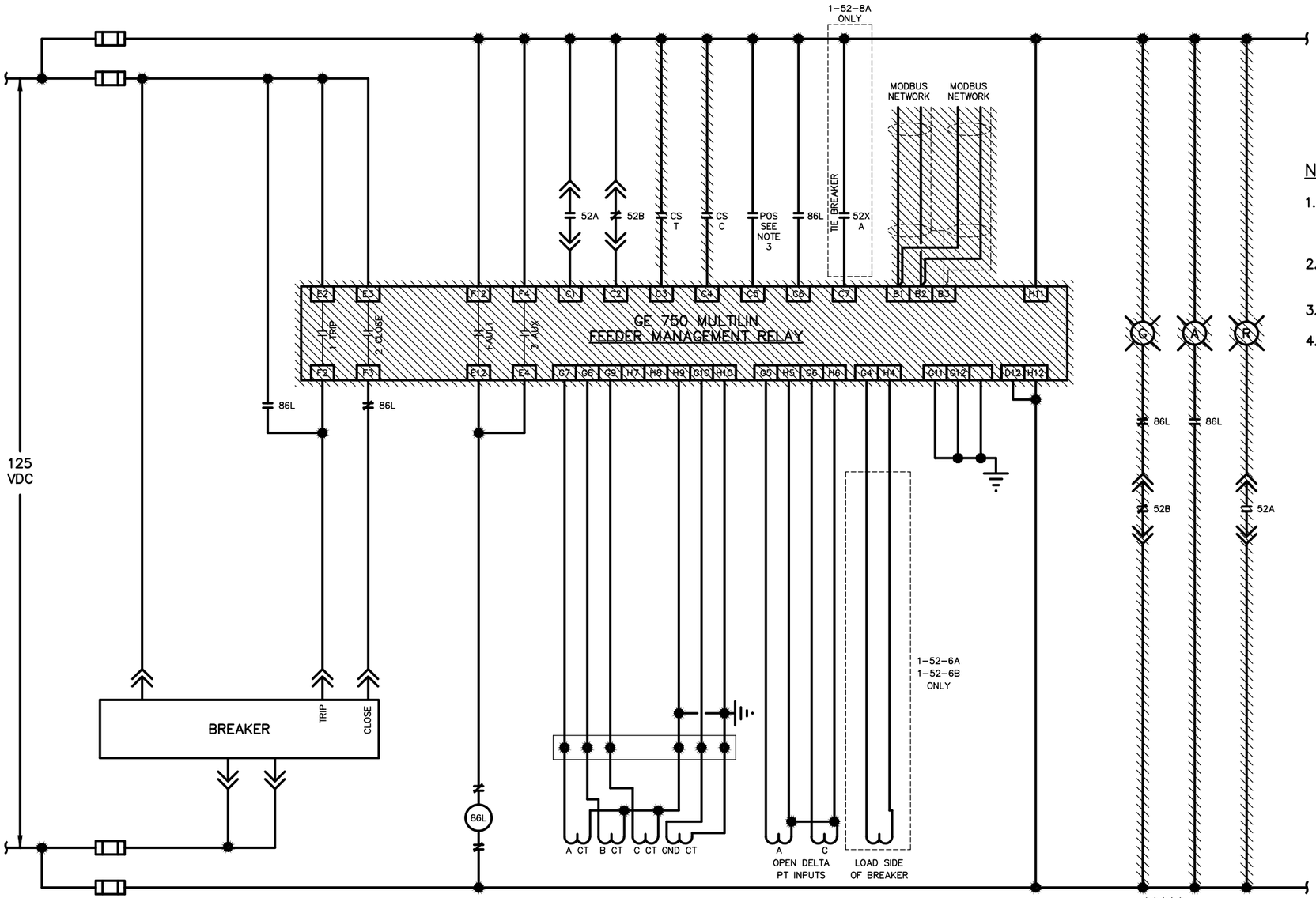

NOTES:

1. EXISTING INSTALLATIONS DENOTED ON THE DRAWINGS ARE FOR CONTRACTOR'S REFERENCE ONLY. ALL EXISTING INSTALLATIONS SHALL BE FIELD VERIFIED PRIOR TO COMMENCING CONSTRUCTION.
2. THE ENTIRE LENGTH OF WIRING SHALL BE REMOVED FOR ANY LENGTH OF WIRING THAT IS SHOWN TO BE REMOVED
3. TRUCK OPERATED BREAKER POSITION SWITCH.
4. TYPICAL FOR THE FOLLOWING FEEDER CIRCUIT BREAKERS:

A-SECTION	B-SECTION
1-52-1A	1-52-1B
1-52-3A	1-52-3B
1-52-4A	1-52-4B
1-52-5A	1-52-5B
1-52-6A	1-52-6B
1-52-8A	1-52-8B
1-52-9A	1-52-9B

– DENOTES EXISTING DEVICE AND WIRING TO BE REMOVED. ITEM SHALL BE REMOVED FROM PREMISES AND DISPOSED OF PROPERLY, UNLESS OTHERWISE NOTED. UNLESS SPECIFICALLY SHOWN OTHERWISE, ALL EXISTING WIRING CONNECTED TO THE DEVICES SHOWN SHALL REMAIN AND SHALL BE RE-CONNECTED AS SHOWN IN THE DRAWINGS. REMOVE ALL WIRING WHERE INDICATED. PROVIDE A BLANK COVERPLATE TO COVER ANY OPENING RESULTING FROM A DEVICE BEING REMOVED FROM THE EXISTING SWITCHGEAR AND THE DEVICE IS NOT BEING REPLACED.

ENGINEER OF RECORD:
BOB E. HALLMAN, P.E.
FLORIDA REGISTRATION NO. 20761

Engineering Design Technologies Corp.
P.O. Box 152403
Tampa, FL 33684-2403
813.289.8080
813.282.9184 FAX
engineering@edt1.com
Certificate of Authorization Number: 4795

CITY of TAMPA
WASTEWATER DEPARTMENT

HFC AWTP SWITCHGEAR BLDG.
PROTECTIVE RELAY REPLACEMENT

EXISTING SWITCHGEAR NO. 1 TYP. FEEDER BREAKER GE 750 FEEDER MANAGEMENT RELAY WIRING DIAGRAM

NO.	DATE	REVISIONS

DRAWN: STK
DESIGN: BEH
QC: BEH
DATE: 08/13/18

SHEET E-25

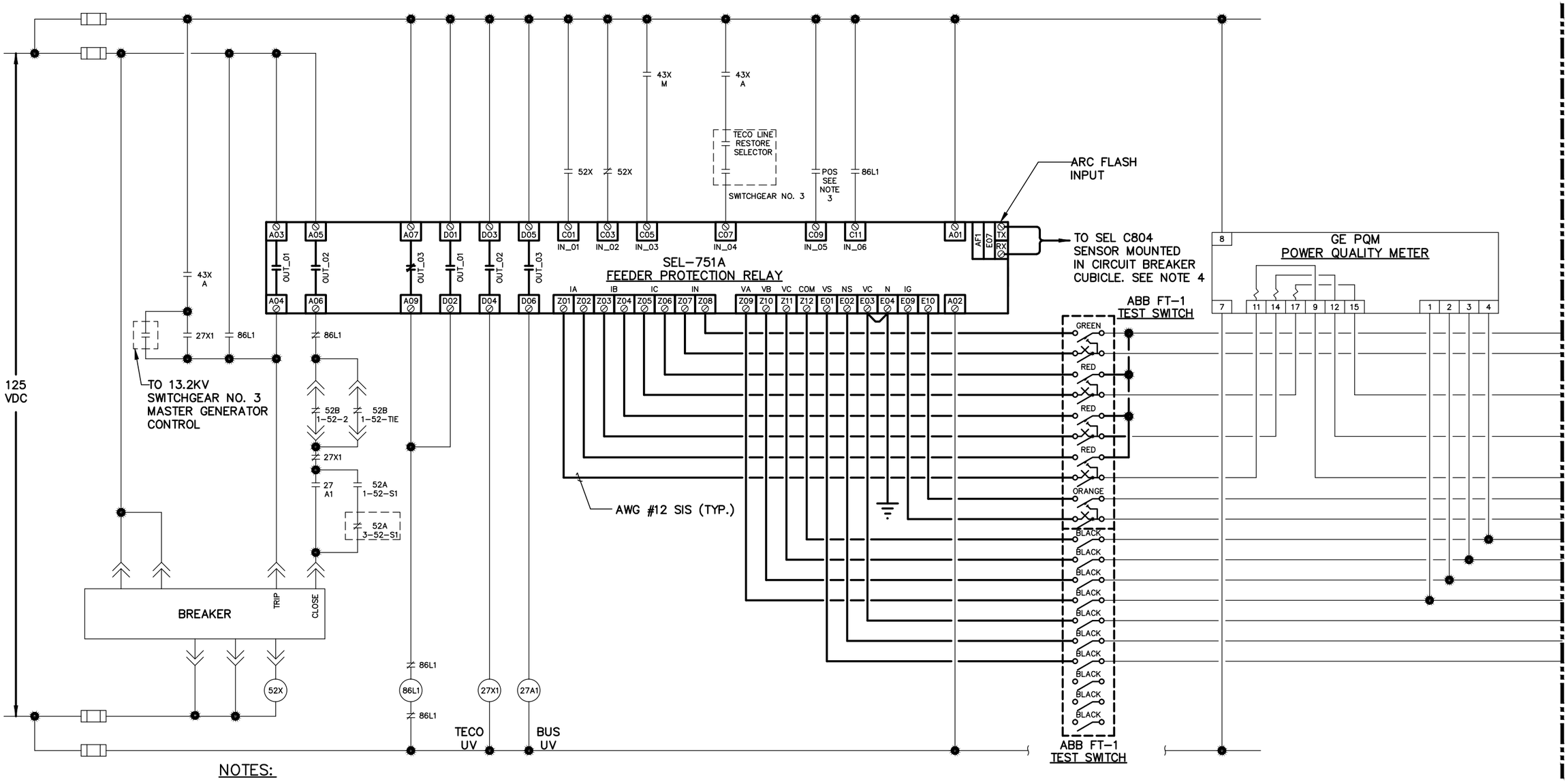

NOTES:

1. EXISTING INSTALLATIONS DENOTED ON THE DRAWINGS ARE FOR CONTRACTOR'S REFERENCE ONLY. ALL EXISTING INSTALLATIONS SHALL BE FIELD VERIFIED PRIOR TO COMMENCING CONSTRUCTION.
2. LIGHT LINES INDICATE EXISTING INSTALLATION/DEVICE/WIRING.
3. TRUCK OPERATED BREAKER POSITION SWITCH.
4. CONTRACTOR SHALL PROVIDE & INSTALL A SEL C804 OPTICAL FIBER ARC FLASH DETECTOR IN THE CIRCUIT BREAKER CUBICLE. SECURE SENSOR & OPTICAL FIBER CABLE IN PLACE SO AS NOT TO INTERFERE WITH THE RACKING IN OR OUT OF THE CIRCUIT BREAKER FROM THE SWITCHGEAR CUBICLE. MECHANICAL SECURING HARDWARE SHALL BE UTILIZED. ADHESIVE TYPE SECURING METHODS ARE NOT ACCEPTABLE.

ENGINEER OF RECORD:
BOB E. HALLMAN, P.E.
FLORIDA REGISTRATION NO. 20761

Engineering Design Technologies Corp.
P.O. Box 152403
Tampa, FL 33684-2403
813.289.8080
813.282.9184 FAX
engineering@edt1.com
Certificate of Authorization Number: 4795

CITY of TAMPA
WASTEWATER DEPARTMENT

HFC AWTP SWITCHGEAR BLDG.
PROTECTIVE RELAY REPLACEMENT

EXISTING SWITCHGEAR NO. 1 1-52-1 MAIN
SEL-751A
RELAY WIRING DIAGRAM (SHEET 1 OF 2)

NO.	DATE	REVISIONS

DRAWN: STK
DESIGN: BEH
QC: BEH
DATE: 08/13/18

SHEET E-26

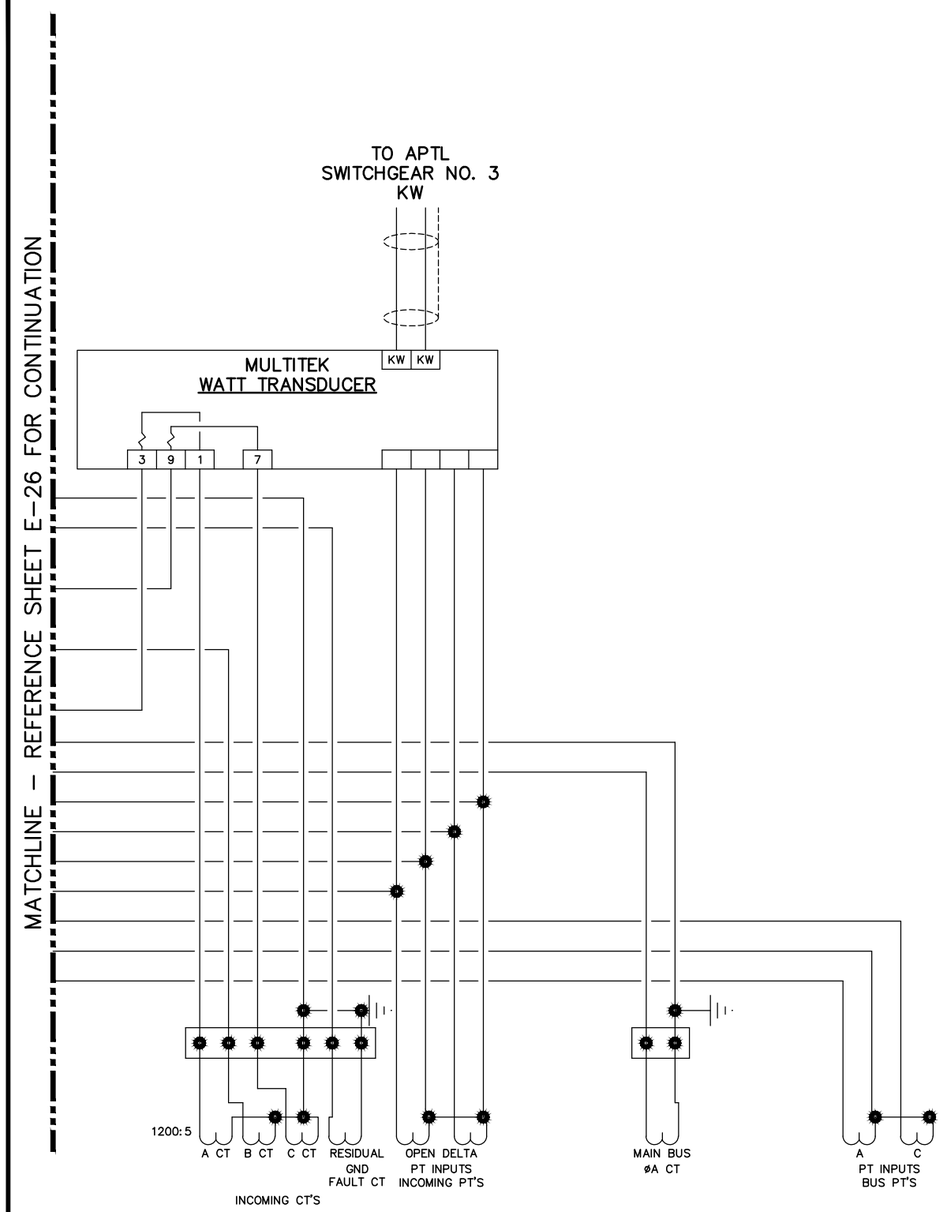

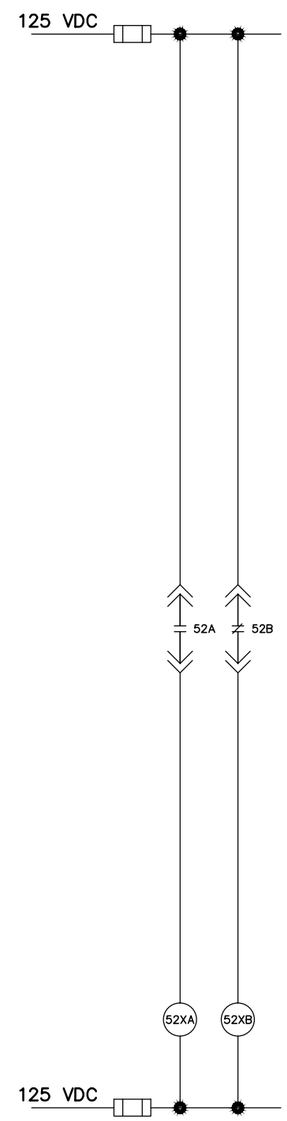

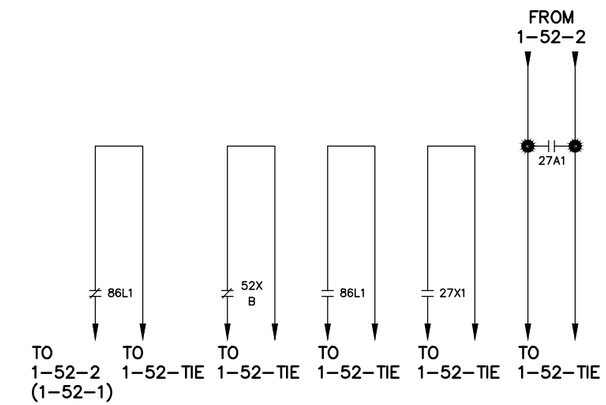

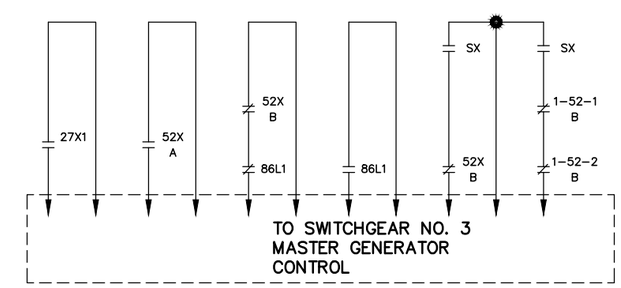

NOTES:

1. EXISTING INSTALLATIONS DENOTED ON THE DRAWINGS ARE FOR CONTRACTOR'S REFERENCE ONLY. ALL EXISTING INSTALLATIONS SHALL BE FIELD VERIFIED PRIOR TO COMMENCING CONSTRUCTION.

2. LIGHT LINES INDICATE EXISTING INSTALLATION/DEVICE/WIRING.

ENGINEER OF RECORD:
BOB E. HALLMAN, P.E.
FLORIDA REGISTRATION NO. 20761

Engineering Design Technologies Corp.
P.O. Box 152403
Tampa, FL 33684-2403
813.289.8080
813.282.9184 FAX
engineering@edt1.com
Certificate of Authorization Number: 4795

CITY of TAMPA
WASTEWATER DEPARTMENT

HFC AWTP SWITCHGEAR BLDG.
PROTECTIVE RELAY REPLACEMENT

EXISTING SWITCHGEAR NO. 1 1-52-1 MAIN
SEL-751A
RELAY WIRING DIAGRAM (SHEET 2 OF 2)

NO.	DATE	REVISIONS

DRAWN: STK
DESIGN: BEH
QC: BEH
DATE: 08/13/18

SHEET E-27

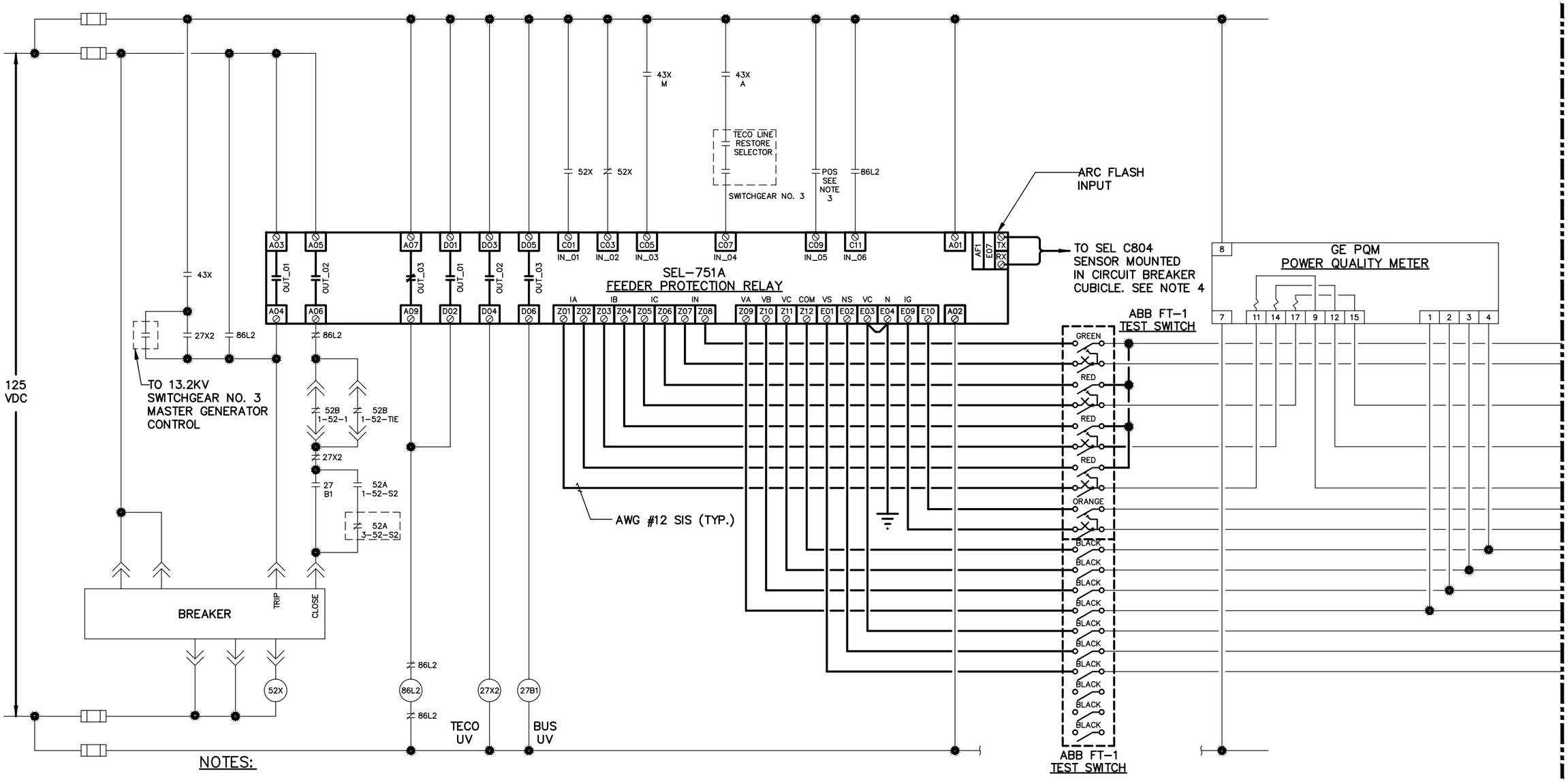

NOTES:

1. EXISTING INSTALLATIONS DENOTED ON THE DRAWINGS ARE FOR CONTRACTOR'S REFERENCE ONLY. ALL EXISTING INSTALLATIONS SHALL BE FIELD VERIFIED PRIOR TO COMMENCING CONSTRUCTION.
2. LIGHT LINES INDICATE EXISTING INSTALLATION/DEVICE/WIRING.
3. TRUCK OPERATED BREAKER POSITION SWITCH.
4. CONTRACTOR SHALL PROVIDE & INSTALL A SEL C804 OPTICAL FIBER ARC FLASH DETECTOR IN THE CIRCUIT BREAKER CUBICLE. SECURE SENSOR & OPTICAL FIBER CABLE IN PLACE SO AS NOT TO INTERFERE WITH THE RACKING IN OR OUT OF THE CIRCUIT BREAKER FROM THE SWITCHGEAR CUBICLE. MECHANICAL SECURING HARDWARE SHALL BE UTILIZED. ADHESIVE TYPE SECURING METHODS ARE NOT ACCEPTABLE.

ENGINEER OF RECORD:
BOB E. HALLMAN, P.E.
FLORIDA REGISTRATION NO. 20761

Engineering Design Technologies Corp.
P.O. Box 152403
Tampa, FL 33684-2403
813.289.8080
813.282.9184 FAX
engineering@edt1.com
Certificate of Authorization Number: 4795

CITY of TAMPA
WASTEWATER DEPARTMENT

HFC AWTP SWITCHGEAR BLDG.
PROTECTIVE RELAY REPLACEMENT

EXISTING SWITCHGEAR NO. 1 1-52-2 MAIN
SEL-751A
RELAY WIRING DIAGRAM (SHEET 1 OF 2)

NO.	DATE	REVISIONS

DRAWN: STK
DESIGN: BEH
QC: BEH
DATE: 08/13/18

SHEET E-28

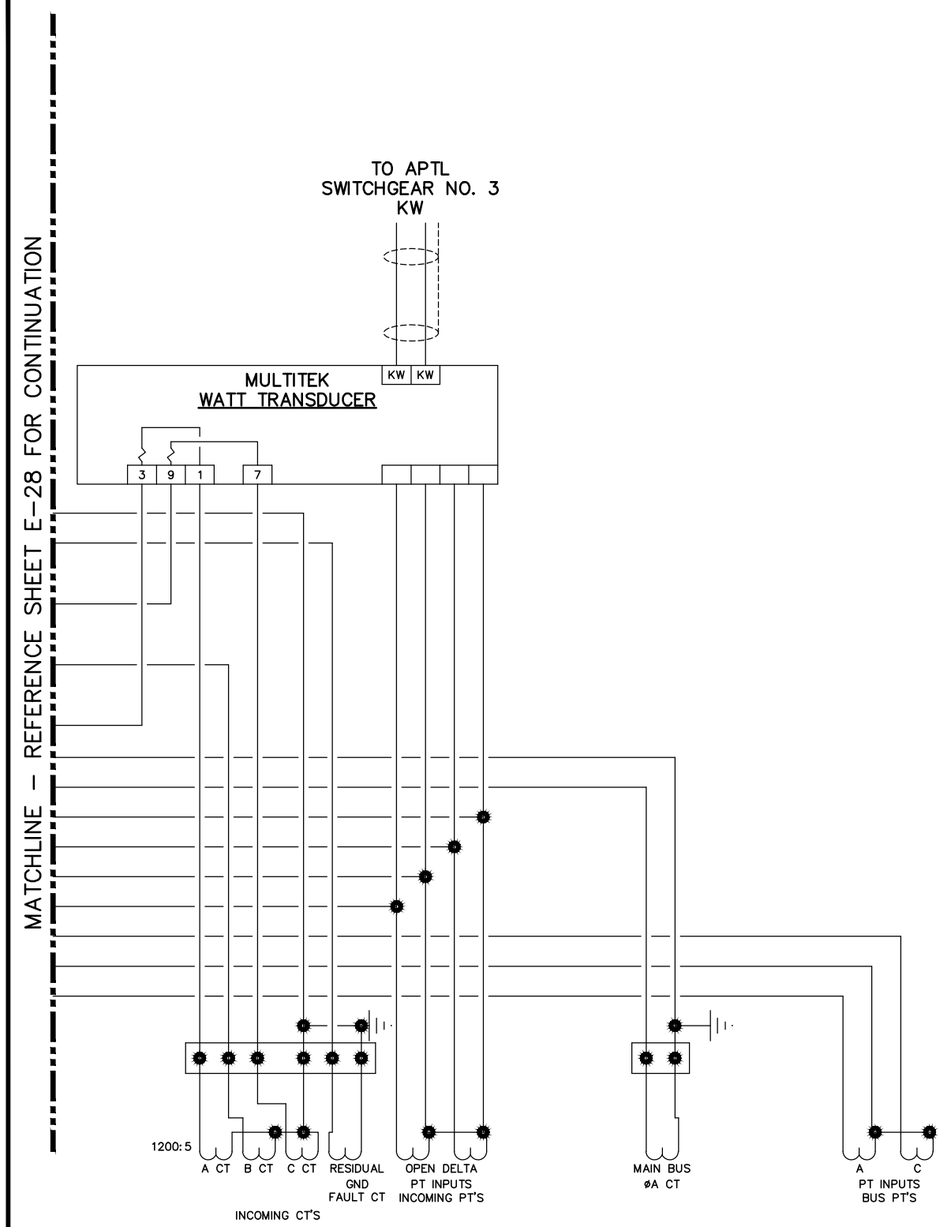

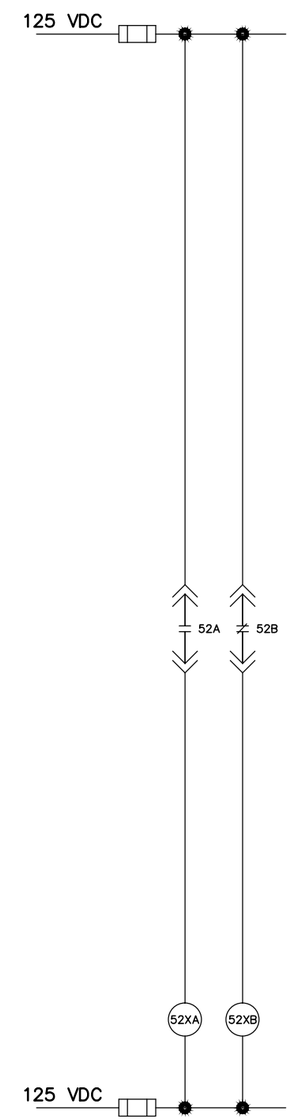

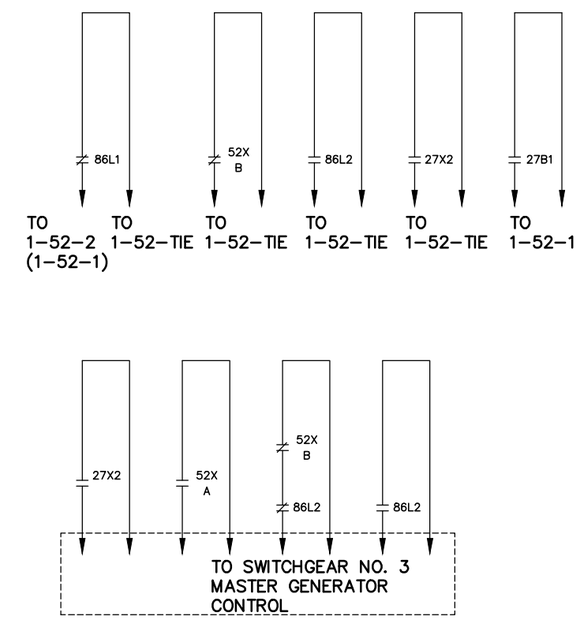

NOTES:

1. EXISTING INSTALLATIONS DENOTED ON THE DRAWINGS ARE FOR CONTRACTOR'S REFERENCE ONLY. ALL EXISTING INSTALLATIONS SHALL BE FIELD VERIFIED PRIOR TO COMMENCING CONSTRUCTION.
2. LIGHT LINES INDICATE EXISTING INSTALLATION/DEVICE/WIRING.

ENGINEER OF RECORD:
BOB E. HALLMAN, P.E.
FLORIDA REGISTRATION NO. 20761

Engineering Design Technologies Corp.
P.O. Box 152403
Tampa, FL 33684-2403
813.289.8080
813.282.9184 FAX
engineering@edt1.com
Certificate of Authorization Number: 4795

CITY of TAMPA
WASTEWATER DEPARTMENT

HFC AWTP SWITCHGEAR BLDG.
PROTECTIVE RELAY REPLACEMENT

EXISTING SWITCHGEAR NO. 1 1-52-2 MAIN
SEL-751A
RELAY WIRING DIAGRAM (SHEET 2 OF 2)

NO.	DATE	REVISIONS

DRAWN: STK
DESIGN: BEH
QC: BEH
DATE: 08/13/18

SHEET E-29

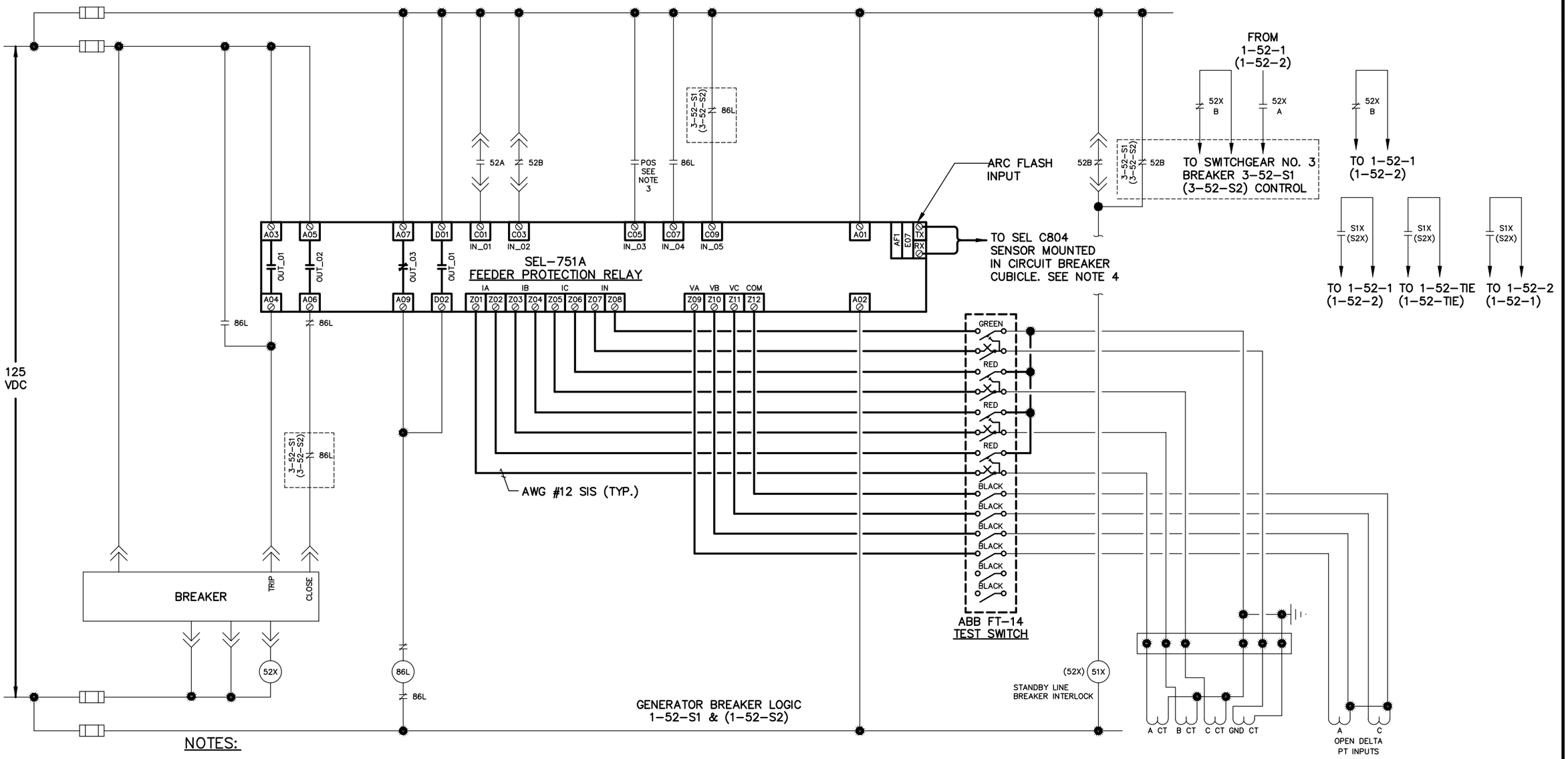

NOTES:

1. EXISTING INSTALLATIONS DENOTED ON THE DRAWINGS ARE FOR CONTRACTOR'S REFERENCE ONLY. ALL EXISTING INSTALLATIONS SHALL BE FIELD VERIFIED PRIOR TO COMMENCING CONSTRUCTION.
2. LIGHT LINES INDICATE EXISTING INSTALLATION/DEVICE/WIRING.
3. TRUCK OPERATED BREAKER POSITION SWITCH.
4. CONTRACTOR SHALL PROVIDE & INSTALL A SEL C804 OPTICAL FIBER ARC FLASH DETECTOR IN THE CIRCUIT BREAKER CUBICLE. SECURE SENSOR & OPTICAL FIBER CABLE IN PLACE SO AS NOT TO INTERFERE WITH THE RACKING IN OR OUT OF THE CIRCUIT BREAKER FROM THE SWITCHGEAR CUBICLE. MECHANICAL SECURING HARDWARE SHALL BE UTILIZED. ADHESIVE TYPE SECURING METHODS ARE NOT ACCEPTABLE.

ENGINEER OF RECORD:
BOB E. HALLMAN, P.E.
FLORIDA REGISTRATION NO. 20761

Engineering Design Technologies Corp.
P.O. Box 152403
Tampa, FL 33684-2403
813.289.8080
813.282.9184 FAX
engineering@edt1.com
Certificate of Authorization Number: 4795

CITY of TAMPA
WASTEWATER DEPARTMENT

HFC AWTP SWITCHGEAR BLDG.
PROTECTIVE RELAY REPLACEMENT

EXISTING SWITCHGEAR NO. 1 1-52-S1 & 1-52-S2 SEL-751A
RELAY WIRING DIAGRAM

NO.	DATE	REVISIONS

DRAWN: STK
DESIGN: BEH
QC: BEH
DATE: 08/13/18

SHEET E-30

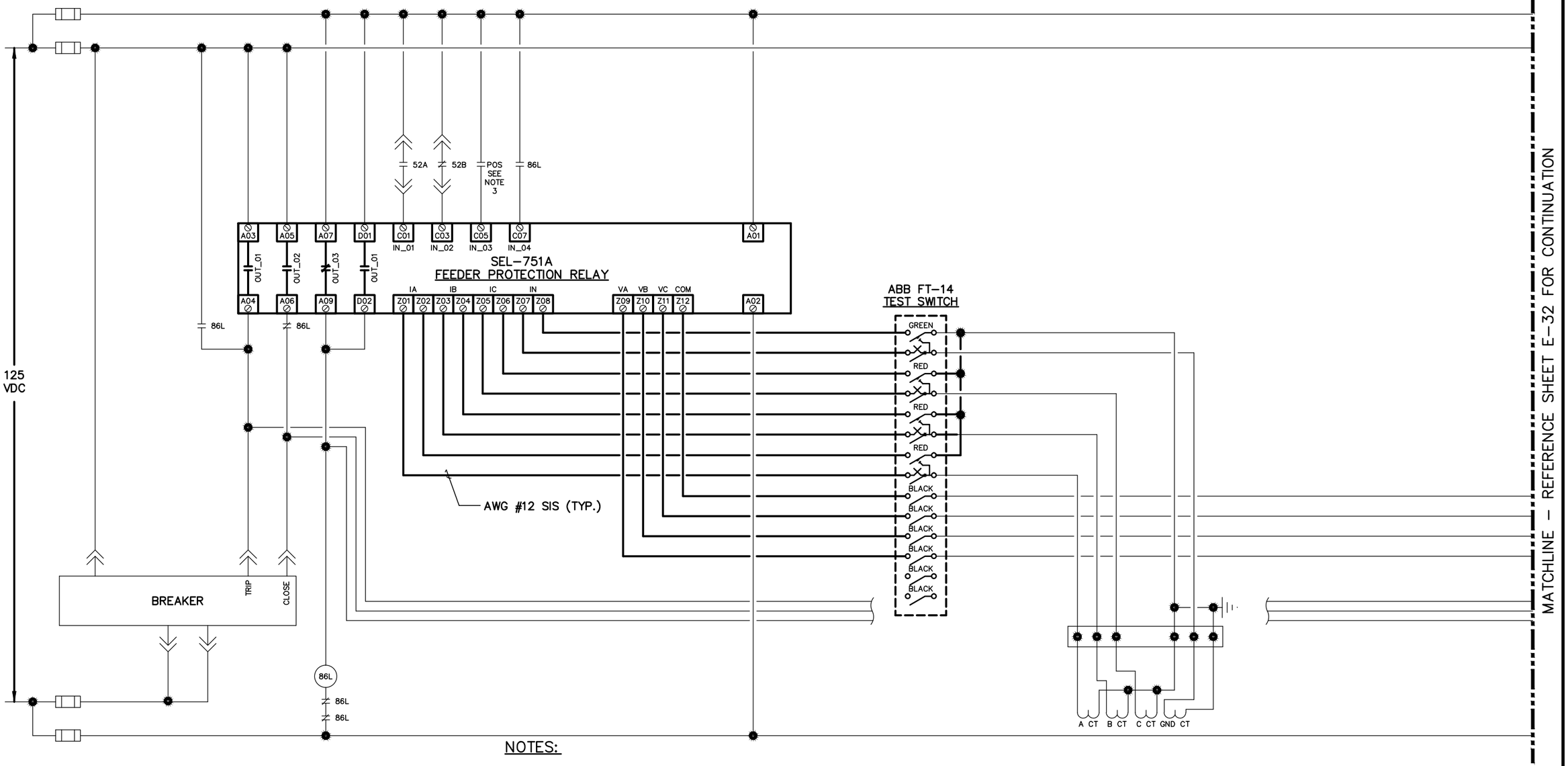

NOTES:

1. EXISTING INSTALLATIONS DENOTED ON THE DRAWINGS ARE FOR CONTRACTOR'S REFERENCE ONLY. ALL EXISTING INSTALLATIONS SHALL BE FIELD VERIFIED PRIOR TO COMMENCING CONSTRUCTION.
2. LIGHT LINES INDICATE EXISTING INSTALLATION/DEVICE/WIRING.
3. TRUCK OPERATED BREAKER POSITION SWITCH.

ENGINEER OF RECORD:
BOB E. HALLMAN, P.E.
FLORIDA REGISTRATION NO. 20761

Engineering Design Technologies Corp.
P.O. Box 152403
Tampa, FL 33684-2403
813.289.8080
813.282.9184 FAX
engineering@edt1.com
Certificate of Authorization Number: 4795

CITY of TAMPA
WASTEWATER DEPARTMENT

HFC AWTP SWITCHGEAR BLDG.
PROTECTIVE RELAY REPLACEMENT

EXISTING SWITCHGEAR NO. 1 1-52-2A & 1-52-2B SEL-751A
RELAY WIRING DIAGRAM (SHEET 1 OF 2)

NO.	DATE	REVISIONS

DRAWN: STK
DESIGN: BEH
QC: BEH
DATE: 08/13/18

SHEET E-31

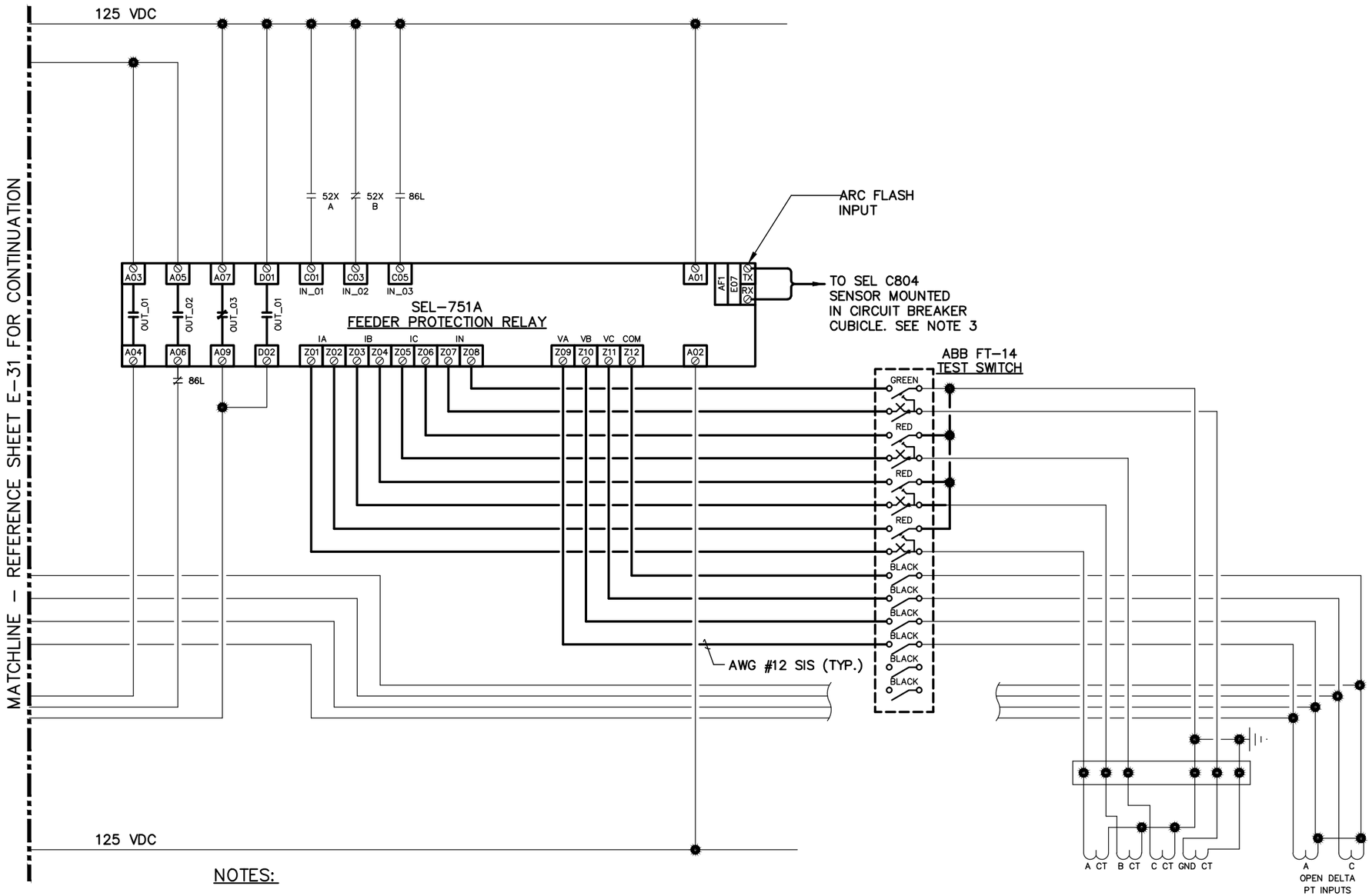

NOTES:

1. EXISTING INSTALLATIONS DENOTED ON THE DRAWINGS ARE FOR CONTRACTOR'S REFERENCE ONLY. ALL EXISTING INSTALLATIONS SHALL BE FIELD VERIFIED PRIOR TO COMMENCING CONSTRUCTION.
2. LIGHT LINES INDICATE EXISTING INSTALLATION/DEVICE/WIRING.
3. CONTRACTOR SHALL PROVIDE & INSTALL A SEL C804 OPTICAL FIBER ARC FLASH DETECTOR IN THE CIRCUIT BREAKER CUBICLE. SECURE SENSOR & OPTICAL FIBER CABLE IN PLACE SO AS NOT TO INTERFERE WITH THE RACKING IN OR OUT OF THE CIRCUIT BREAKER FROM THE SWITCHGEAR CUBICLE. MECHANICAL SECURING HARDWARE SHALL BE UTILIZED. ADHESIVE TYPE SECURING METHODS ARE NOT ACCEPTABLE.

ENGINEER OF RECORD:
BOB E. HALLMAN, P.E.
FLORIDA REGISTRATION NO. 20761

Engineering Design Technologies Corp.
P.O. Box 152403
Tampa, FL 33684-2403
813.289.8080
813.282.9184 FAX
engineering@edt1.com
Certificate of Authorization Number: 4795

CITY of TAMPA
WASTEWATER DEPARTMENT

HFC AWTP SWITCHGEAR BLDG.
PROTECTIVE RELAY REPLACEMENT

EXISTING SWITCHGEAR NO. 1 1-52-2A & 1-52-2B SEL-751A
RELAY WIRING DIAGRAM (SHEET 2 OF 2)

NO.	DATE	REVISIONS

DRAWN: STK
DESIGN: BEH
QC: BEH
DATE: 08/13/18

SHEET E-32

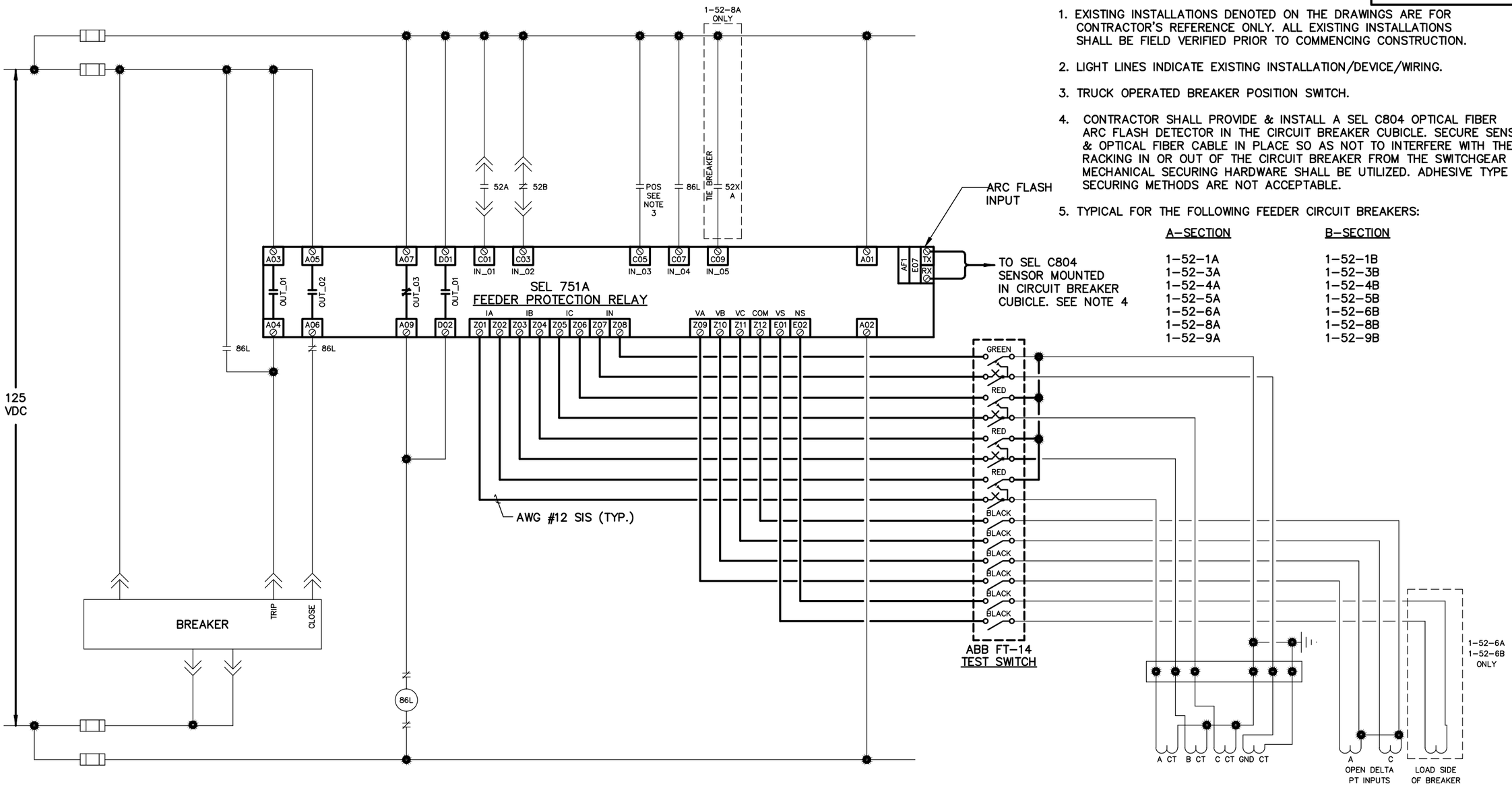

NOTES:

1. EXISTING INSTALLATIONS DENOTED ON THE DRAWINGS ARE FOR CONTRACTOR'S REFERENCE ONLY. ALL EXISTING INSTALLATIONS SHALL BE FIELD VERIFIED PRIOR TO COMMENCING CONSTRUCTION.
2. LIGHT LINES INDICATE EXISTING INSTALLATION/DEVICE/WIRING.
3. TRUCK OPERATED BREAKER POSITION SWITCH.
4. CONTRACTOR SHALL PROVIDE & INSTALL A SEL C804 OPTICAL FIBER ARC FLASH DETECTOR IN THE CIRCUIT BREAKER CUBICLE. SECURE SENSOR & OPTICAL FIBER CABLE IN PLACE SO AS NOT TO INTERFERE WITH THE RACKING IN OR OUT OF THE CIRCUIT BREAKER FROM THE SWITCHGEAR CUBICLE. MECHANICAL SECURING HARDWARE SHALL BE UTILIZED. ADHESIVE TYPE SECURING METHODS ARE NOT ACCEPTABLE.
5. TYPICAL FOR THE FOLLOWING FEEDER CIRCUIT BREAKERS:

A-SECTION	B-SECTION
1-52-1A	1-52-1B
1-52-3A	1-52-3B
1-52-4A	1-52-4B
1-52-5A	1-52-5B
1-52-6A	1-52-6B
1-52-8A	1-52-8B
1-52-9A	1-52-9B

ENGINEER OF RECORD:
BOB E. HALLMAN, P.E.
FLORIDA REGISTRATION NO. 20761

Engineering Design Technologies Corp.
P.O. Box 152403
Tampa, FL 33684-2403
813.289.8080
813.282.9184 FAX
engineering@edt1.com
Certificate of Authorization Number: 4795

CITY of TAMPA
WASTEWATER DEPARTMENT

HFC AWTP SWITCHGEAR BLDG.
PROTECTIVE RELAY REPLACEMENT

EXISTING SWITCHGEAR NO. 1 TYP. FEEDER BREAKER SEL-751A RELAY WIRING DIAGRAM

NO.	DATE	REVISIONS

DRAWN: STK
DESIGN: BEH
QC: BEH
DATE: 08/13/18

SHEET E-33

4160V SWITCHGEAR MVMCC–80

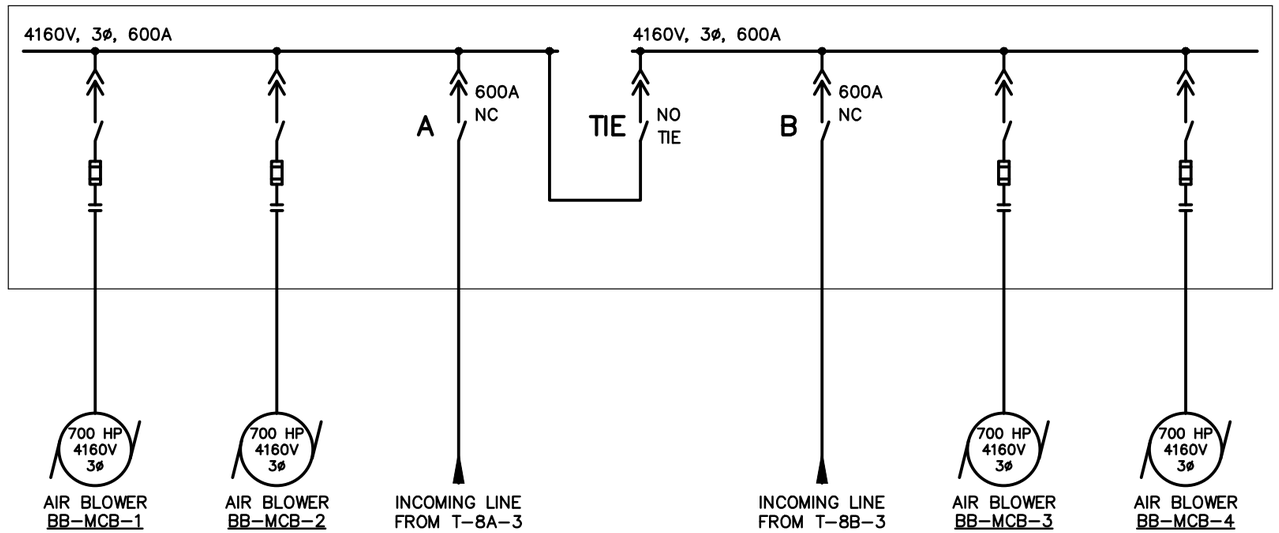

NOTES:

1. EXISTING INSTALLATIONS DENOTED ON THE DRAWINGS ARE FOR CONTRACTOR'S REFERENCE ONLY. ALL EXISTING INSTALLATIONS SHALL BE FIELD VERIFIED PRIOR TO COMMENCING CONSTRUCTION.

2. FOR GENERAL LOCATION OF WORK SEE AWT PLANT OVERVIEW MAP ON SHEET E–4

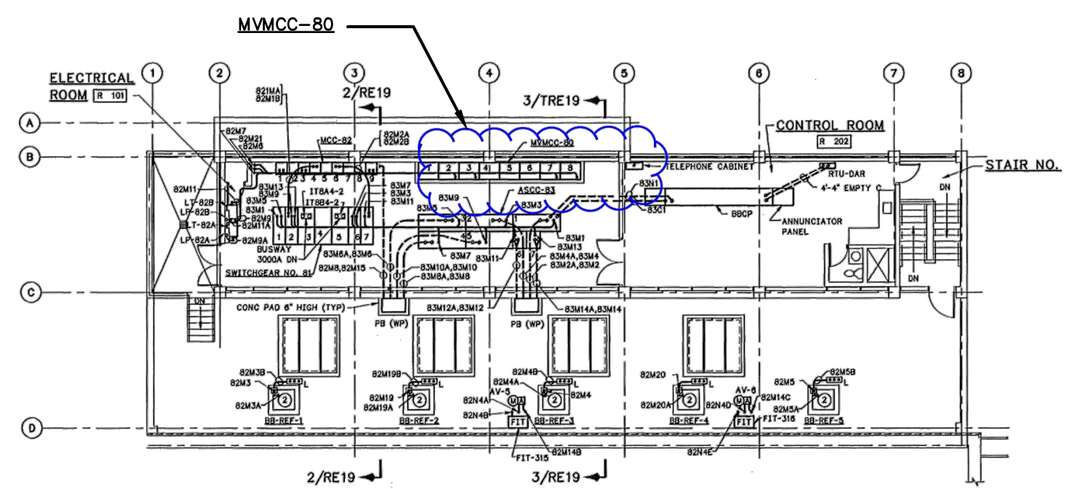

BLOWER BUILDING (058)

ENGINEER OF RECORD:
BOB E. HALLMAN, P.E.
FLORIDA REGISTRATION NO. 20761

Engineering Design Technologies Corp.
P.O. Box 152403
Tampa, FL 33684-2403
813.289.8080
813.282.9184 FAX
engineering@edt1.com
Certificate of Authorization Number: 4795

CITY of TAMPA
WASTEWATER DEPARTMENT

HFC AWTP SWITCHGEAR BLDG.
PROTECTIVE RELAY REPLACEMENT

EXISTING SWITCHGEAR MVMCC–80
ELECTRICAL ONE–LINE DIAGRAM

NO.	DATE	REVISIONS

DRAWN: STK
DESIGN: BEH
QC: BEH
DATE: 08/13/18

SHEET E-34

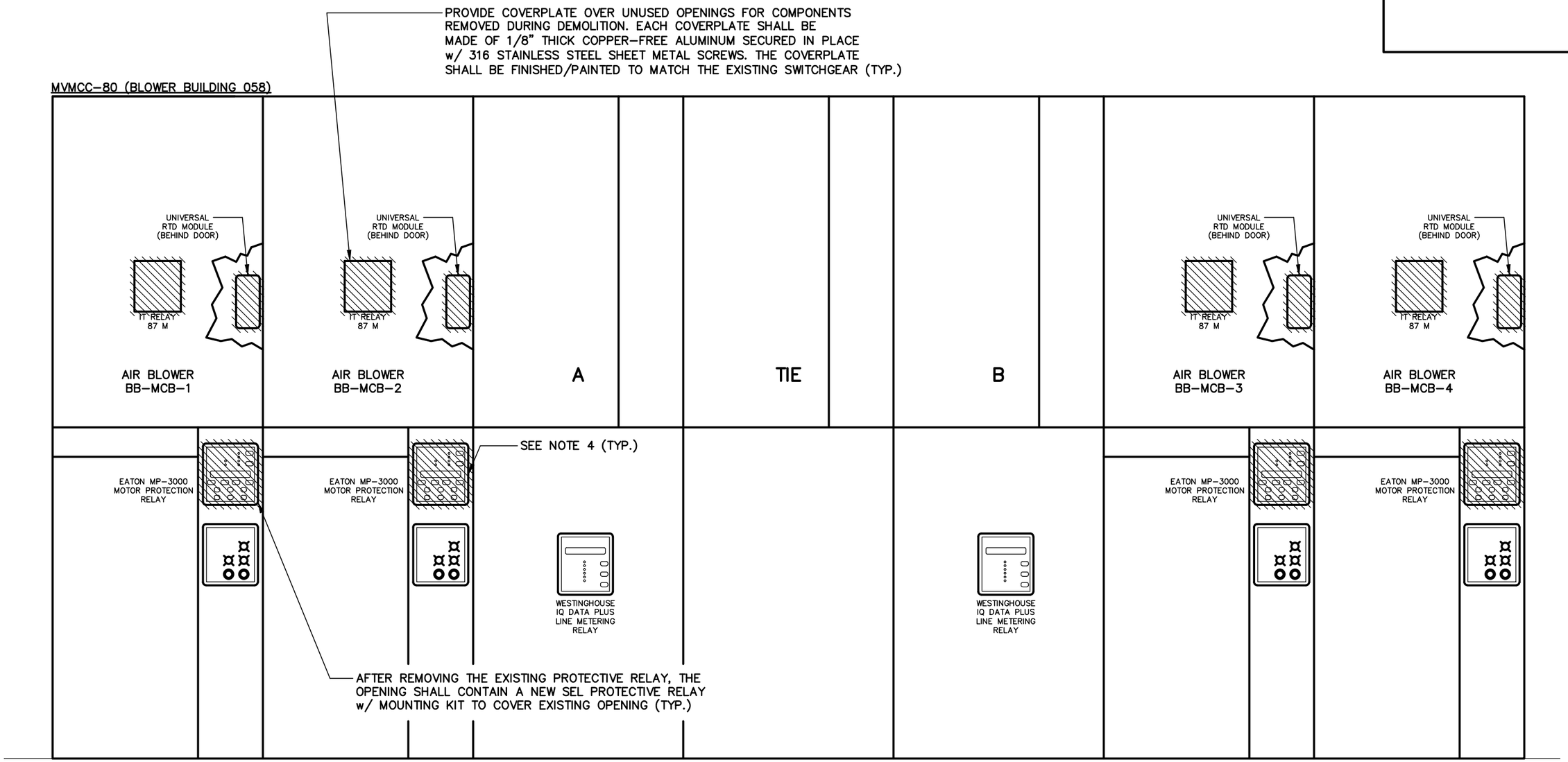

NOTES:

– DENOTES EXISTING DEVICE AND WIRING TO BE REMOVED. ITEM SHALL BE REMOVED FROM PREMISES AND DISPOSED OF PROPERLY, UNLESS OTHERWISE NOTED. UNLESS SPECIFICALLY SHOWN OTHERWISE, ALL EXISTING WIRING CONNECTED TO THE DEVICES SHOWN SHALL REMAIN AND SHALL BE RE-CONNECTED AS SHOWN IN THE DRAWINGS. REMOVE ALL WIRING WHERE INDICATED. PROVIDE A BLANK COVERPLATE TO COVER ANY OPENING RESULTING FROM A DEVICE BEING REMOVED FROM THE EXISTING SWITCHGEAR AND THE DEVICE IS NOT BEING REPLACED.

1. COORDINATE ALL DEMOLITION ACTIVITIES WITH OWNER AND ALL TRADES.
2. ALL EQUIPMENT & WIRING INCLUDED ON THIS DRAWING ARE EXISTING. CONTRACTOR SHALL VISIT THE SITE & FAMILIARIZE HIMSELF WITH THE EXISTING CONDITIONS BEFORE SUBMITTING A BID OR COMMENCING CONSTRUCTION.
3. ALL EXISTING INSTALLATIONS DENOTED ON THE DRAWINGS ARE FOR CONTRACTOR'S REFERENCE ONLY. ALL EXISTING INSTALLATIONS SHALL BE FIELD VERIFIED PRIOR TO COMMENCING CONSTRUCTION.
4. THE EXISTING WIRING & TERMINATIONS TO THE EATON MP-3000 MOTOR PROTECTION RELAYS AND RTD MODULES SHALL SHALL REMAIN FOR CONNECTING THE NEW SEL MOTOR PROTECTION RELAYS AND RTD MODULES.

ENGINEER OF RECORD:
BOB E. HALLMAN, P.E.
FLORIDA REGISTRATION NO. 20761

Engineering Design Technologies Corp.
P.O. Box 152403
Tampa, FL 33684-2403
813.289.8080
813.282.9184 FAX
engineering@edt1.com
Certificate of Authorization Number: 4795

CITY of TAMPA
WASTEWATER DEPARTMENT

HFC AWTP SWITCHGEAR BLDG.
PROTECTIVE RELAY REPLACEMENT

EXISTING SWITCHGEAR MVMCC-80
DEMOLITION

NO.	DATE	REVISIONS

DRAWN: STK
DESIGN: BEH
QC: BEH
DATE: 08/13/18

SHEET E-35

MVMCC-80 (BLOWER BUILDING 058)

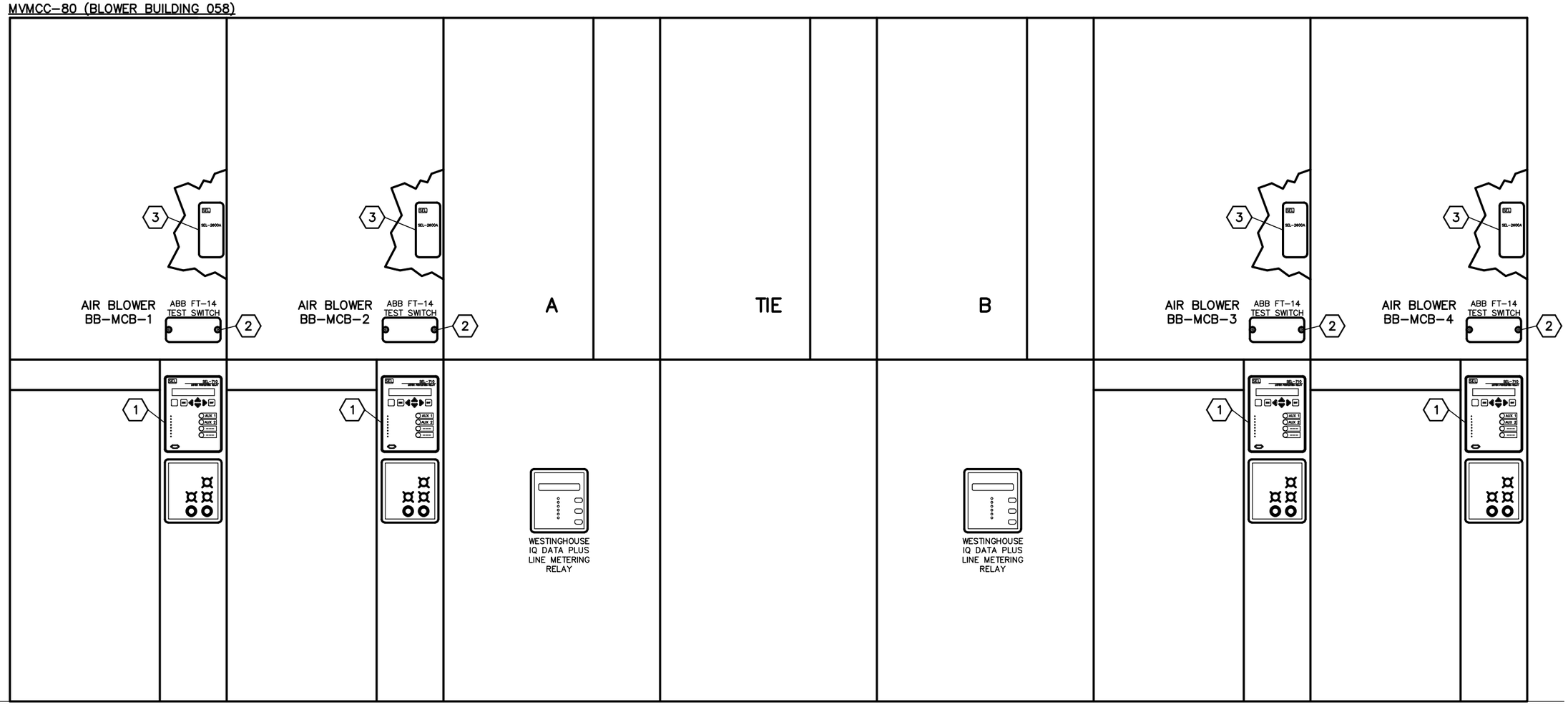

NOTES:

1. EXISTING INSTALLATIONS DENOTED ON THE DRAWINGS ARE FOR CONTRACTOR'S REFERENCE ONLY. ALL EXISTING INSTALLATIONS SHALL BE FIELD VERIFIED PRIOR TO COMMENCING CONSTRUCTION.
2. THE CONTRACTOR SHALL PROVIDE (1) SPARE SEL-710 MOTOR PROTECTION RELAY.

KEYED NOTES:

(1) SCHWEITZER ENGINEERING LABORATORIES (SEL) SEL-710 MOTOR PROTECTION RELAY. PROVIDE PANEL-MOUNTING KIT AND MOUNT IN EXISTING SWITCHGEAR IN LOCATION SHOWN. REFERENCE SPECIFICATIONS.

(2) ABB FLEXITEST SWITCH w/ CLEAR COVER, 14 CURRENT SHORTING (MAKE-BEFORE-BREAK) POLES w/ 6-RED HANDLES, 2-GREEN HANDLES, 6 ORANGE HANDLES, SCREW TERMINALS & STANDARD DEPTH. ABB FT-14 FLEXITEST SERIES SWITCH, ARRANGEMENT C9-C9 C9-C9 C9-C9 C5-C5 C2-C2 C2-C2 C2-C2

(3) SCHWEITZER ENGINEERING LABORATORIES (SEL) SEL-2600A RTD MODULE. MOUNT BEHIND DOOR OF EXISTING SWITCHGEAR IN LOCATION SHOWN. REFERENCE SPECIFICATIONS.

ENGINEER OF RECORD:
BOB E. HALLMAN, P.E.
FLORIDA REGISTRATION NO. 20761

Engineering Design Technologies Corp.
P.O. Box 152403
Tampa, FL 33684-2403
813.289.8080
813.282.9184 FAX
engineering@edt1.com
Certificate of Authorization Number: 4795

CITY of TAMPA
WASTEWATER DEPARTMENT

HFC AWTP SWITCHGEAR BLDG.
PROTECTIVE RELAY REPLACEMENT

EXISTING SWITCHGEAR MVMCC-80
MODIFICATIONS

NO.	DATE	REVISIONS

DRAWN: STK
DESIGN: BEH
QC: BEH
DATE: 08/13/18

SHEET E-36

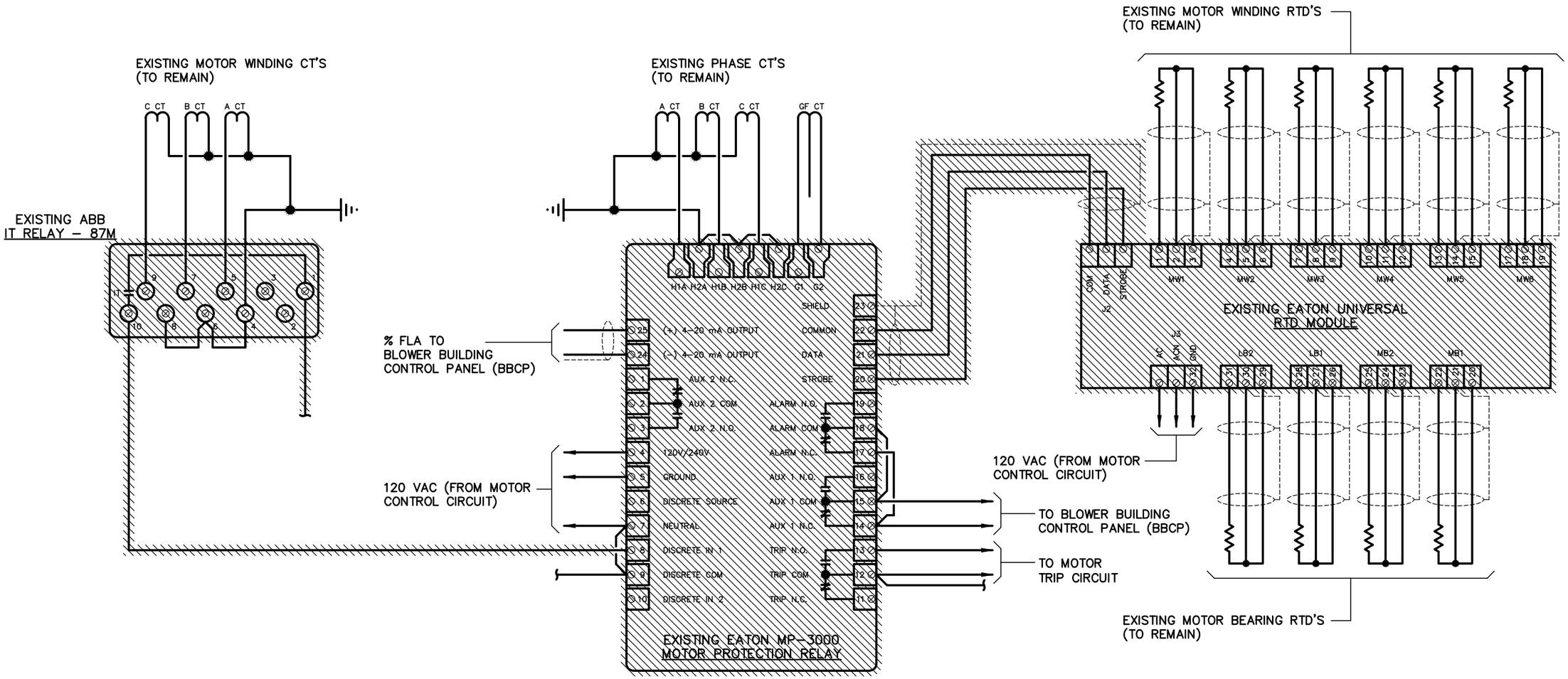

NOTES:

1. EXISTING INSTALLATIONS DENOTED ON THE DRAWINGS ARE FOR CONTRACTOR'S REFERENCE ONLY. ALL EXISTING INSTALLATIONS SHALL BE FIELD VERIFIED PRIOR TO COMMENCING CONSTRUCTION.

2. THE ENTIRE LENGTH OF WIRING SHALL BE REMOVED FOR ANY LENGTH OF WIRING THAT IS SHOWN TO BE REMOVED

– DENOTES EXISTING DEVICE AND WIRING TO BE REMOVED. ITEM SHALL BE REMOVED FROM PREMISES AND DISPOSED OF PROPERLY, UNLESS OTHERWISE NOTED. UNLESS SPECIFICALLY SHOWN OTHERWISE, ALL EXISTING WIRING CONNECTED TO THE DEVICES SHOWN SHALL REMAIN AND SHALL BE RE–CONNECTED AS SHOWN IN THE DRAWINGS. REMOVE ALL WIRING WHERE INDICATED. PROVIDE A BLANK COVERPLATE TO COVER ANY OPENING RESULTING FROM A DEVICE BEING REMOVED FROM THE EXISTING SWITCHGEAR AND THE DEVICE IS NOT BEING REPLACED.

ENGINEER OF RECORD:
BOB E. HALLMAN, P.E.
FLORIDA REGISTRATION NO. 20761

Engineering Design Technologies Corp.
P.O. Box 152403
Tampa, FL 33684-2403
813.289.8080
813.282.9184 FAX
engineering@edt1.com
Certificate of Authorization Number: 4795

CITY of TAMPA
WASTEWATER DEPARTMENT

HFC AWTP SWITCHGEAR BLDG.
PROTECTIVE RELAY REPLACEMENT

EXISTING AIR BLOWERS
EATON MP–3000 MOTOR PROTECTION RELAY
WIRING DIAGRAM

NO.	DATE	REVISIONS

DRAWN: STK
DESIGN: BEH
QC: BEH
DATE: 08/13/18

SHEET E-37

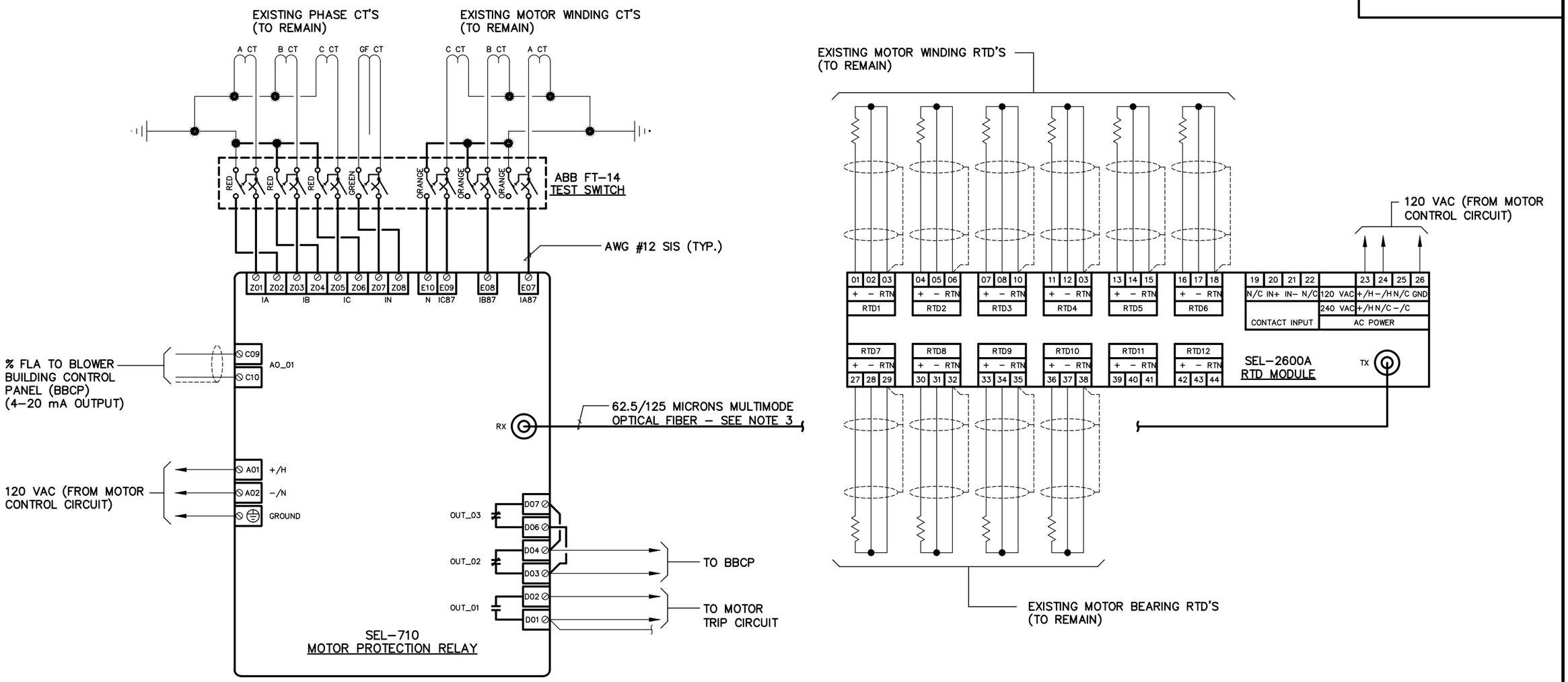

NOTES:

1. EXISTING INSTALLATIONS DENOTED ON THE DRAWINGS ARE FOR CONTRACTOR'S REFERENCE ONLY. ALL EXISTING INSTALLATIONS SHALL BE FIELD VERIFIED PRIOR TO COMMENCING CONSTRUCTION.
2. LIGHT LINES INDICATE EXISTING INSTALLATION/DEVICE/WIRING.
3. COORDINATE OPTICAL FIBER & TERMINATIONS w/ SEL REQUIREMENTS.

ENGINEER OF RECORD:
BOB E. HALLMAN, P.E.
FLORIDA REGISTRATION NO. 20761

Engineering Design Technologies Corp.
P.O. Box 152403
Tampa, FL 33684-2403
813.289.8080
813.282.9184 FAX
engineering@edt1.com
Certificate of Authorization Number: 4795

CITY of TAMPA
WASTEWATER DEPARTMENT

HFC AWTP SWITCHGEAR BLDG.
PROTECTIVE RELAY REPLACEMENT

EXISTING AIR BLOWERS
SEL-710 MOTOR PROTECTION RELAY
WIRING DIAGRAM

NO.	DATE	REVISIONS

DRAWN: STK
DESIGN: BEH
QC: BEH
DATE: 08/13/18

SHEET E-38

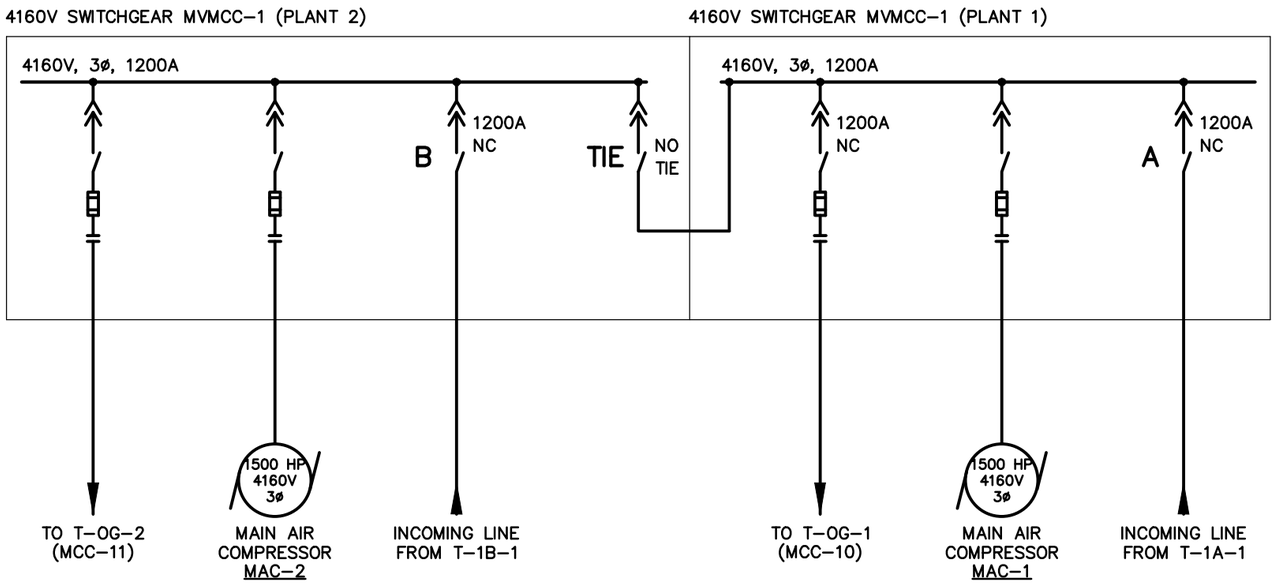

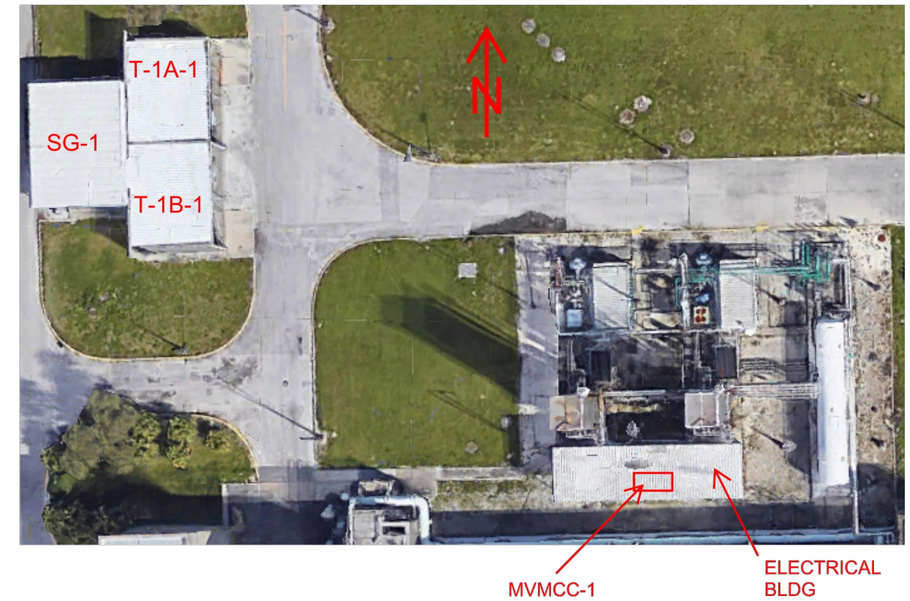

OXYGEN PLANT AERIAL

NOTES:

1. EXISTING INSTALLATIONS DENOTED ON THE DRAWINGS ARE FOR CONTRACTOR'S REFERENCE ONLY. ALL EXISTING INSTALLATIONS SHALL BE FIELD VERIFIED PRIOR TO COMMENCING CONSTRUCTION.
2. FOR GENERAL LOCATION OF WORK SEE AWT PLANT OVERVIEW MAP ON SHEET E–4

ENGINEER OF RECORD:
BOB E. HALLMAN, P.E.
FLORIDA REGISTRATION NO. 20761

Engineering Design Technologies Corp.
P.O. Box 152403
Tampa, FL 33684-2403
813.289.8080
813.282.9184 FAX
engineering@edt1.com
Certificate of Authorization Number: 4795

CITY of TAMPA
WASTEWATER DEPARTMENT

HFC AWTP SWITCHGEAR BLDG.
PROTECTIVE RELAY REPLACEMENT

EXISTING SWITCHGEAR MVMCC–1
ELECTRICAL ONE–LINE DIAGRAM

NO.	DATE	REVISIONS

DRAWN: STK
DESIGN: BEH
QC: BEH
DATE: 08/13/18

SHEET E-39

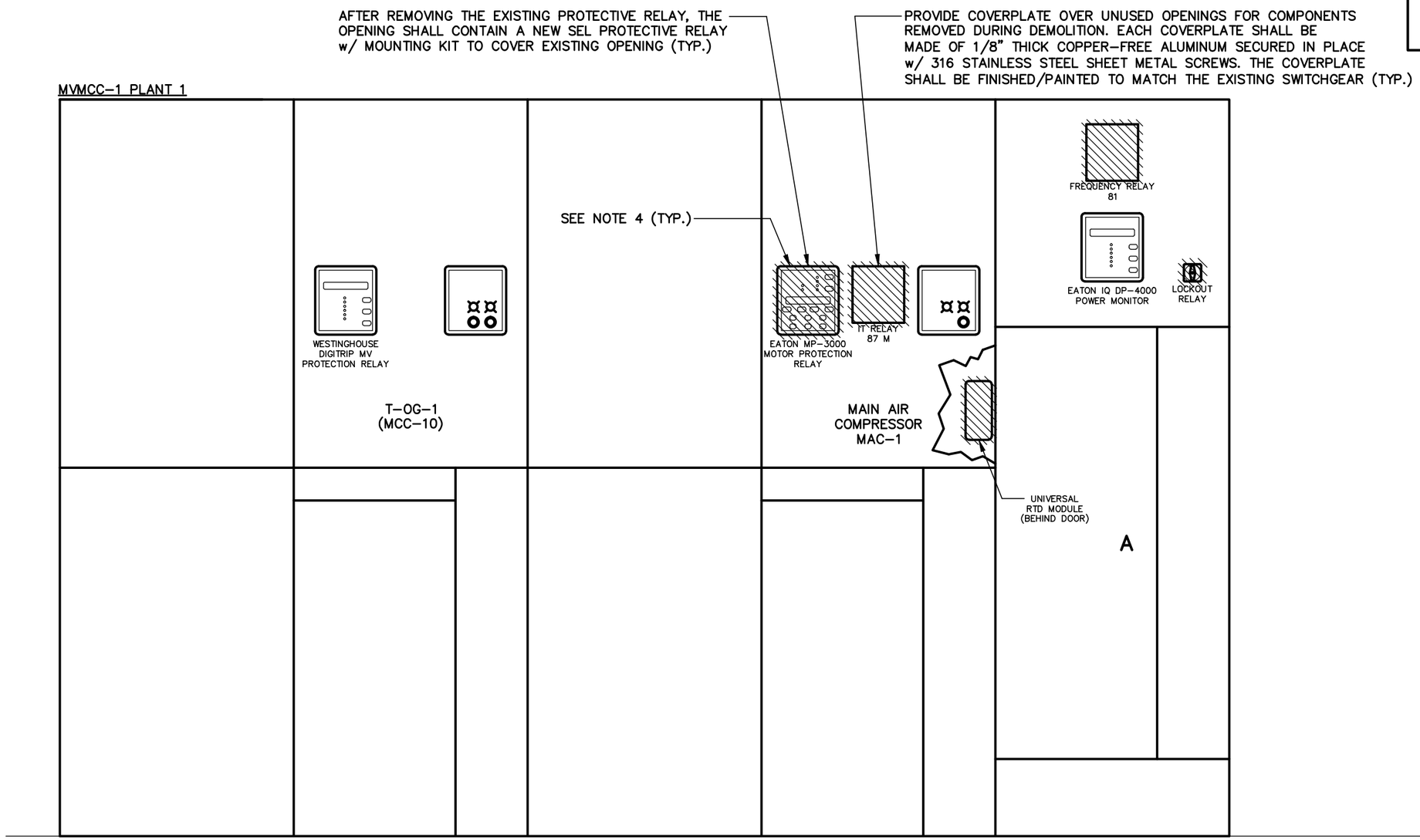

NOTES:

– DENOTES EXISTING DEVICE AND WIRING TO BE REMOVED. ITEM SHALL BE REMOVED FROM PREMISES AND DISPOSED OF PROPERLY, UNLESS OTHERWISE NOTED. UNLESS SPECIFICALLY SHOWN OTHERWISE, ALL EXISTING WIRING CONNECTED TO THE DEVICES SHOWN SHALL REMAIN AND SHALL BE RE-CONNECTED AS SHOWN IN THE DRAWINGS. REMOVE ALL WIRING WHERE INDICATED. PROVIDE A BLANK COVERPLATE TO COVER ANY OPENING RESULTING FROM A DEVICE BEING REMOVED FROM THE EXISTING SWITCHGEAR AND THE DEVICE IS NOT BEING REPLACED.

1. COORDINATE ALL DEMOLITION ACTIVITIES WITH OWNER AND ALL TRADES.
2. ALL EQUIPMENT INCLUDED ON THIS DRAWING ARE EXISTING. CONTRACTOR SHALL VISIT THE SITE & FAMILIARIZE HIMSELF WITH THE EXISTING CONDITIONS BEFORE SUBMITTING A BID OR COMMENCING CONSTRUCTION.
3. ALL EXISTING INSTALLATIONS DENOTED ON THE DRAWINGS ARE FOR CONTRACTOR'S REFERENCE ONLY. ALL EXISTING INSTALLATIONS SHALL BE FIELD VERIFIED PRIOR TO COMMENCING CONSTRUCTION.
4. THE EXISTING WIRING & TERMINATIONS TO THE EATON MP-3000 MOTOR PROTECTION RELAY SHALL REMAIN FOR CONNECTING THE NEW SEL MONITORING RELAYS.
5. ALL WIRING CONNECTED TO THE RTD MODULE SHALL BE REMOVED. REPLACEMENT OF THIS RTD MODULE IS NOT REQUIRED.

ENGINEER OF RECORD:
BOB E. HALLMAN, P.E.
FLORIDA REGISTRATION NO. 20761

Engineering Design Technologies Corp.
P.O. Box 152403
Tampa, FL 33684-2403
813.289.8080
813.282.9184 FAX
engineering@edt1.com
Certificate of Authorization Number: 4795

CITY of TAMPA
WASTEWATER DEPARTMENT

HFC AWTP SWITCHGEAR BLDG.
PROTECTIVE RELAY REPLACEMENT

EXISTING SWITCHGEAR MVMCC-1
(PLANT 1) DEMOLITION

NO.	DATE	REVISIONS

DRAWN: STK
DESIGN: BEH
QC: BEH
DATE: 08/13/18

SHEET E-40

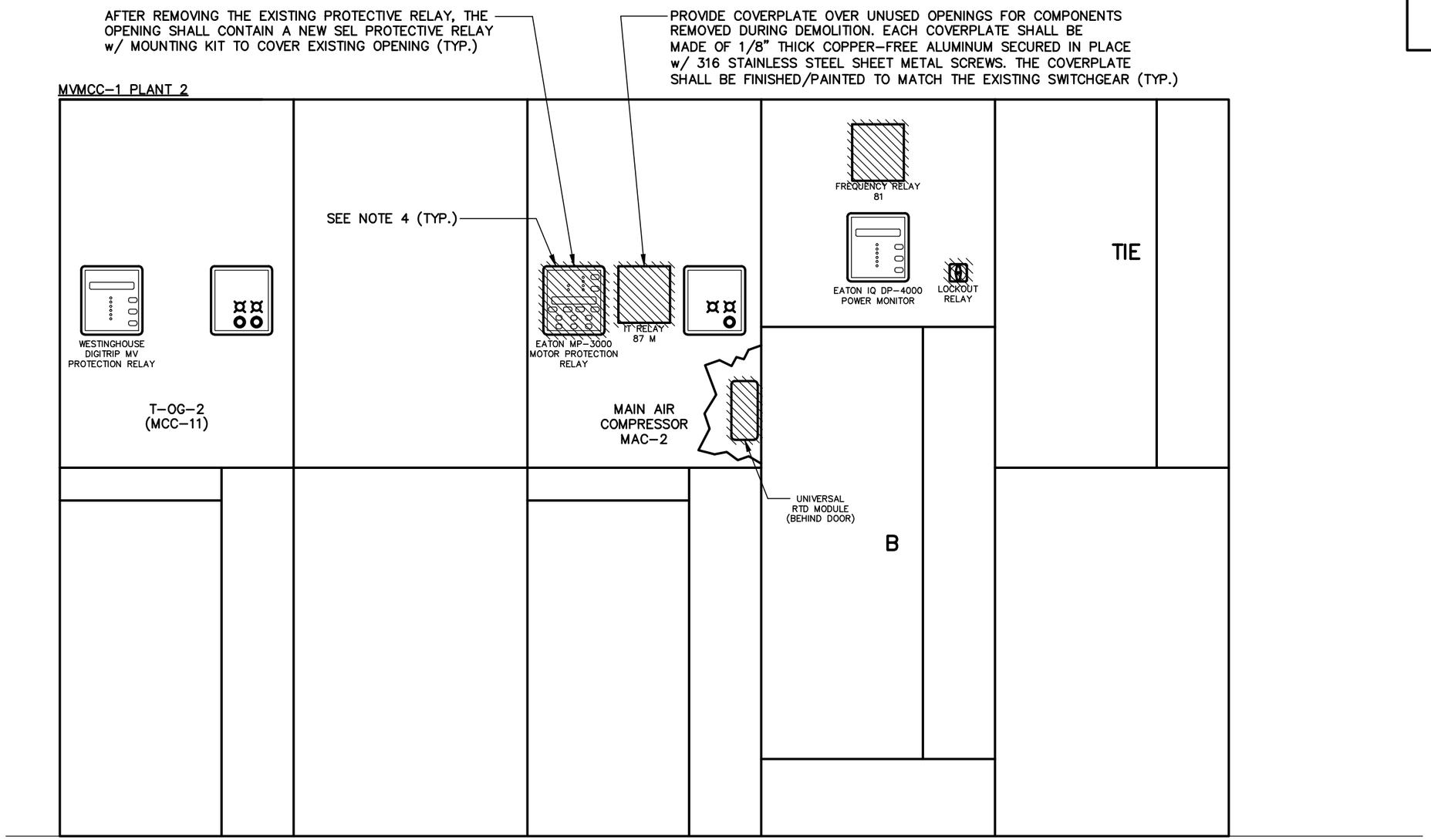

NOTES:

▨ – DENOTES EXISTING DEVICE AND WIRING TO BE REMOVED. ITEM SHALL BE REMOVED FROM PREMISES AND DISPOSED OF PROPERLY, UNLESS OTHERWISE NOTED. UNLESS SPECIFICALLY SHOWN OTHERWISE, ALL EXISTING WIRING CONNECTED TO THE DEVICES SHOWN SHALL REMAIN AND SHALL BE RE-CONNECTED AS SHOWN IN THE DRAWINGS. REMOVE ALL WIRING WHERE INDICATED. PROVIDE A BLANK COVERPLATE TO COVER ANY OPENING RESULTING FROM A DEVICE BEING REMOVED FROM THE EXISTING SWITCHGEAR AND THE DEVICE IS NOT BEING REPLACED.

1. COORDINATE ALL DEMOLITION ACTIVITIES WITH OWNER AND ALL TRADES.
2. ALL EQUIPMENT & WIRING INCLUDED ON THIS DRAWING ARE EXISTING. CONTRACTOR SHALL VISIT THE SITE & FAMILIARIZE HIMSELF WITH THE EXISTING CONDITIONS BEFORE SUBMITTING A BID OR COMMENCING CONSTRUCTION.
3. ALL EXISTING INSTALLATIONS DENOTED ON THE DRAWINGS ARE FOR CONTRACTOR'S REFERENCE ONLY. ALL EXISTING INSTALLATIONS SHALL BE FIELD VERIFIED PRIOR TO COMMENCING CONSTRUCTION.
4. THE EXISTING WIRING & TERMINATIONS TO THE EATON MP-3000 MOTOR PROTECTION RELAY SHALL REMAIN FOR CONNECTING THE NEW SEL MONITORING RELAYS.
5. ALL WIRING CONNECTED TO THE RTD MODULE SHALL BE REMOVED. REPLACEMENT OF THIS RTD MODULE IS NOT REQUIRED.

ENGINEER OF RECORD:
BOB E. HALLMAN, P.E.
FLORIDA REGISTRATION NO. 20761

Engineering Design Technologies Corp.
P.O. Box 152403
Tampa, FL 33684-2403
813.289.8080
813.282.9184 FAX
engineering@edt1.com
Certificate of Authorization Number: 4795

CITY of TAMPA
WASTEWATER DEPARTMENT

HFC AWTP SWITCHGEAR BLDG.
PROTECTIVE RELAY REPLACEMENT

EXISTING SWITCHGEAR MVMCC-1
(PLANT 2) DEMOLITION

NO.	DATE	REVISIONS

DRAWN: STK
DESIGN: BEH
QC: BEH
DATE: 08/13/18

SHEET E-41

MVMCC-1 PLANT 1

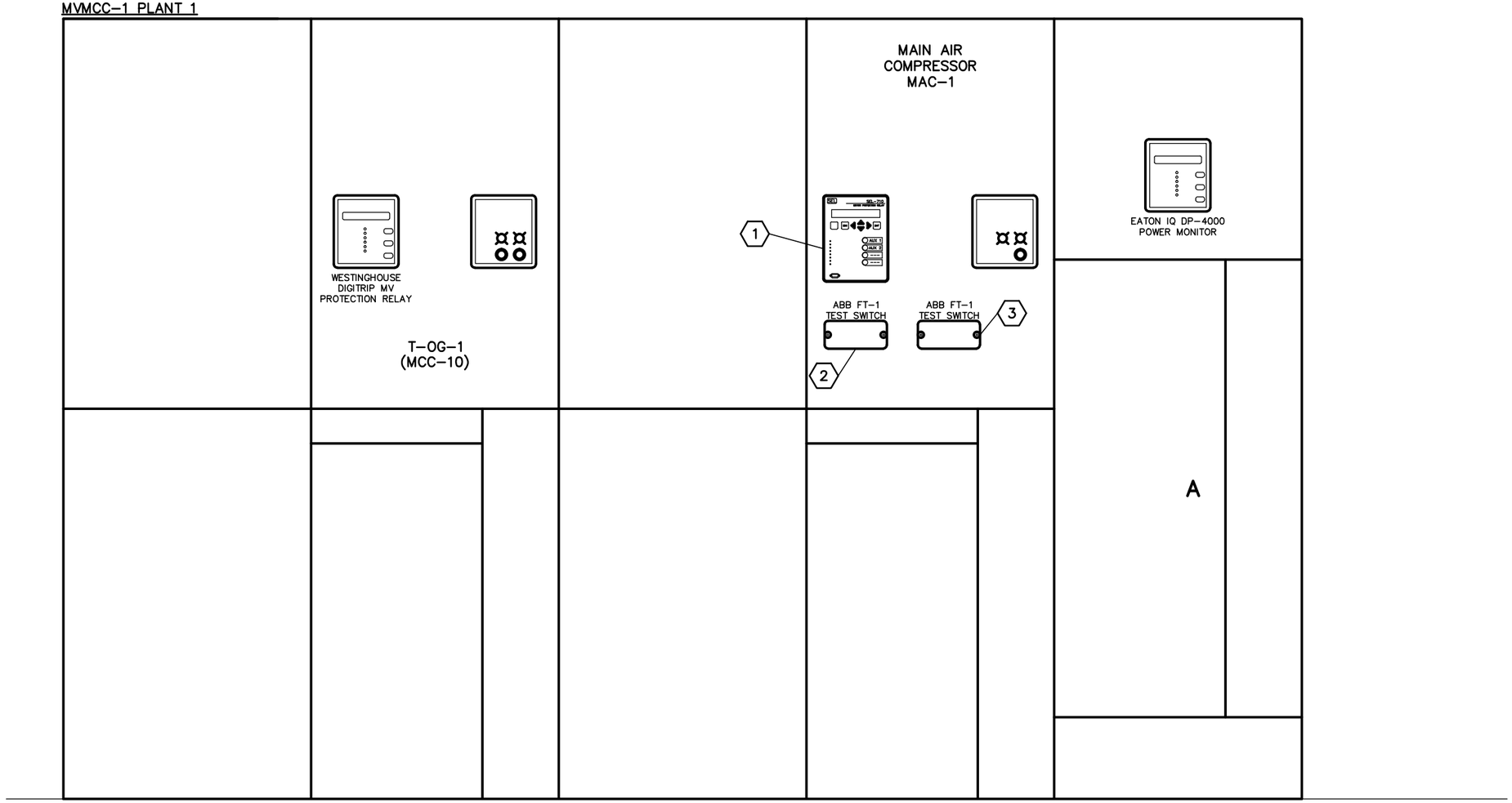

NOTES:

1. EXISTING INSTALLATIONS DENOTED ON THE DRAWINGS ARE FOR CONTRACTOR'S REFERENCE ONLY. ALL EXISTING INSTALLATIONS SHALL BE FIELD VERIFIED PRIOR TO COMMENCING CONSTRUCTION.

KEYED NOTES:

1. SCHWEITZER ENGINEERING LABORATORIES (SEL) SEL-710 MOTOR PROTECTION RELAY. PROVIDE PANEL-MOUNTING KIT AND MOUNT IN EXISTING SWITCHGEAR IN LOCATION SHOWN. REFERENCE SPECIFICATIONS.

2. ABB FLEXITEST SWITCH w/ CLEAR COVER, 8 CURRENT SHORTING (MAKE-BEFORE-BREAK) POLES w/ 6-RED HANDLES, 2-GREEN HANDLES, 2 POTENTIAL POLES w/ 2-BLACK HANDLES, SCREW TERMINALS & STANDARD DEPTH. ABB FT-1 FLEXITEST SERIES SWITCH, ARRANGEMENT P1 P1 C5-C5 C2-C2 C2-C2 C2-C2

3. ABB FLEXITEST SWITCH w/ CLEAR COVER, 6 CURRENT SHORTING (MAKE-BEFORE-BREAK) POLES w/ 6-ORANGE HANDLES, 4 POTENTIAL POLES w/ 4-BLACK HANDLES, SCREW TERMINALS & STANDARD DEPTH. ABB FT-1 FLEXITEST SERIES SWITCH, ARRANGEMENT P1 P1 P1 P1 C9-C9 C9-C9 C9-C9

ENGINEER OF RECORD:
BOB E. HALLMAN, P.E.
FLORIDA REGISTRATION NO. 20761

Engineering Design Technologies Corp.
P.O. Box 152403
Tampa, FL 33684-2403
813.289.8080
813.282.9184 FAX
engineering@edt1.com
Certificate of Authorization Number: 4795

CITY of TAMPA
WASTEWATER DEPARTMENT

HFC AWTP SWITCHGEAR BLDG.
PROTECTIVE RELAY REPLACEMENT

EXISTING SWITCHGEAR MVMCC-1
(PLANT 1) MODIFICATIONS

NO.	DATE	REVISIONS

DRAWN: STK
DESIGN: BEH
QC: BEH
DATE: 08/13/18

SHEET E-42

MVMCC-1 PLANT 2

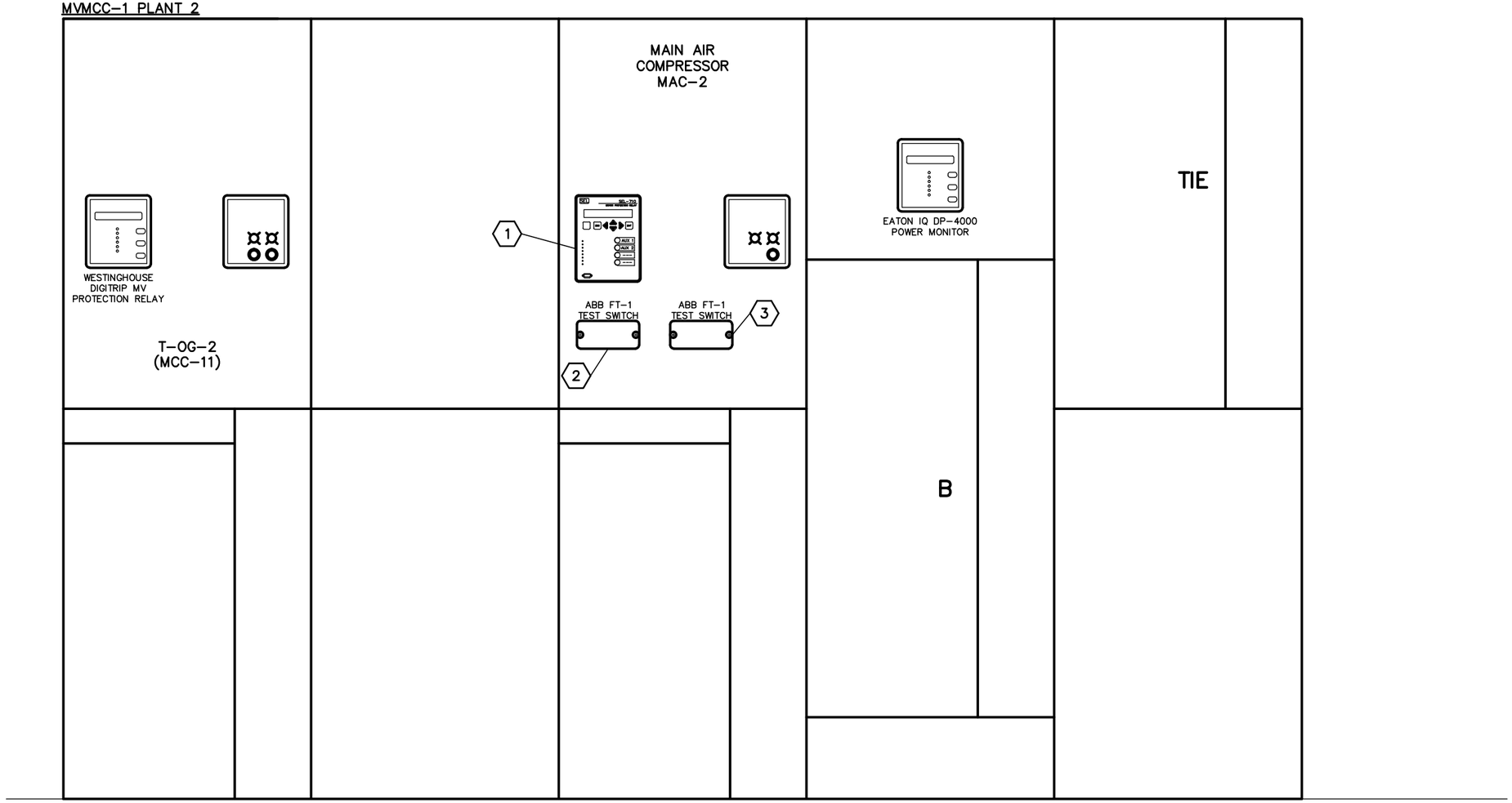

NOTES:

1. EXISTING INSTALLATIONS DENOTED ON THE DRAWINGS ARE FOR CONTRACTOR'S REFERENCE ONLY. ALL EXISTING INSTALLATIONS SHALL BE FIELD VERIFIED PRIOR TO COMMENCING CONSTRUCTION.

KEYED NOTES:

(1) SCHWEITZER ENGINEERING LABORATORIES (SEL) SEL-710 MOTOR PROTECTION RELAY. PROVIDE PANEL-MOUNTING KIT AND MOUNT IN EXISTING SWITCHGEAR IN LOCATION SHOWN. REFERENCE SPECIFICATIONS.

(2) ABB FLEXITEST SWITCH w/ CLEAR COVER, 8 CURRENT SHORTING (MAKE-BEFORE-BREAK) POLES w/ 6-RED HANDLES, 2-GREEN HANDLES, 2 POTENTIAL POLES w/ 2-BLACK HANDLES, SCREW TERMINALS & STANDARD DEPTH. ABB FT-1 FLEXITEST SERIES SWITCH, ARRANGEMENT P1 P1 C5-C5 C2-C2 C2-C2 C2-C2

(3) ABB FLEXITEST SWITCH w/ CLEAR COVER, 6 CURRENT SHORTING (MAKE-BEFORE-BREAK) POLES w/ 6-ORANGE HANDLES, 4 POTENTIAL POLES w/ 4-BLACK HANDLES, SCREW TERMINALS & STANDARD DEPTH. ABB FT-1 FLEXITEST SERIES SWITCH, ARRANGEMENT P1 P1 P1 P1 C9-C9 C9-C9 C9-C9

ENGINEER OF RECORD:
BOB E. HALLMAN, P.E.
FLORIDA REGISTRATION NO. 20761

Engineering Design Technologies Corp.
P.O. Box 152403
Tampa, FL 33684-2403
813.289.8080
813.282.9184 FAX
engineering@edt1.com
Certificate of Authorization Number: 4795

CITY of TAMPA
WASTEWATER DEPARTMENT

HFC AWTP SWITCHGEAR BLDG.
PROTECTIVE RELAY REPLACEMENT

EXISTING SWITCHGEAR MVMCC-1
(PLANT 2) MODIFICATIONS

NO.	DATE	REVISIONS

DRAWN: STK
DESIGN: BEH
QC: BEH
DATE: 08/13/18

SHEET E-43

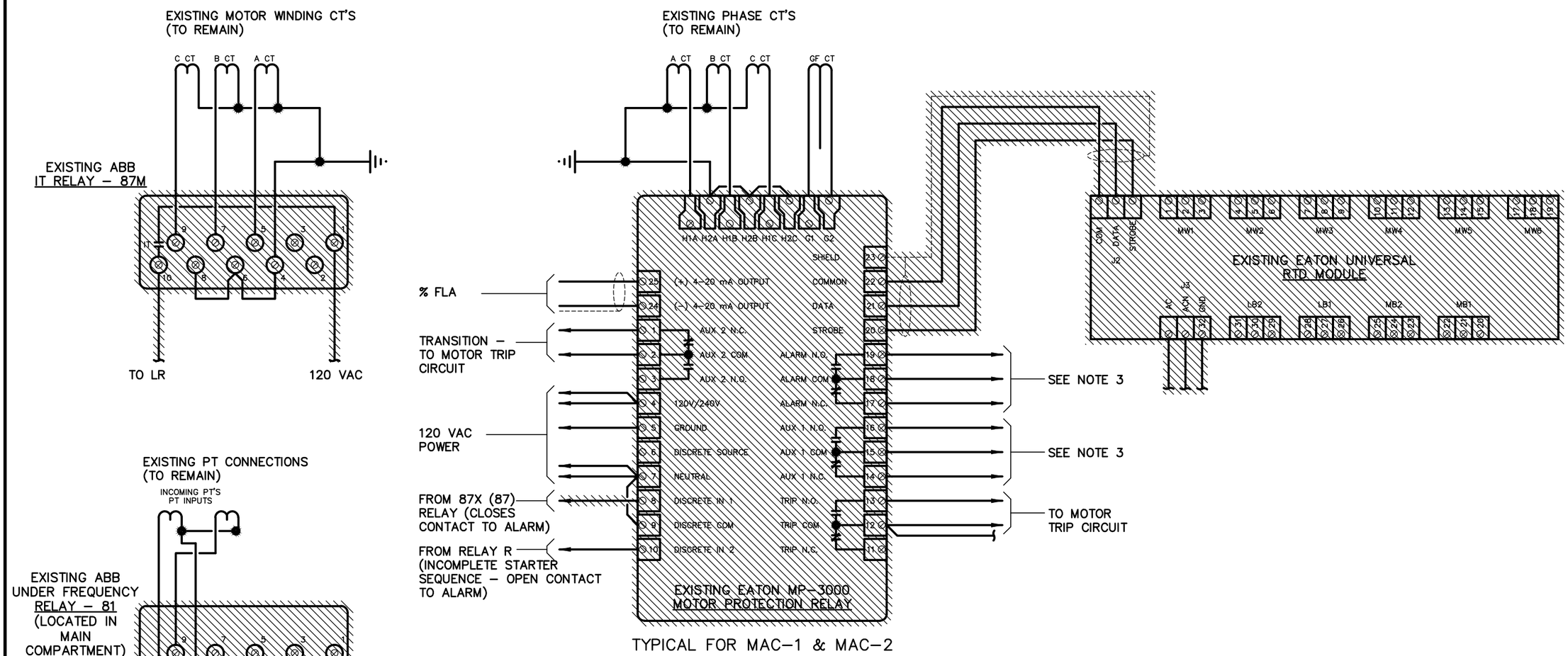

TYPICAL FOR MAC–1 & MAC–2

NOTES:

1. EXISTING INSTALLATIONS DENOTED ON THE DRAWINGS ARE FOR CONTRACTOR'S REFERENCE ONLY. ALL EXISTING INSTALLATIONS SHALL BE FIELD VERIFIED PRIOR TO COMMENCING CONSTRUCTION.
2. THE ENTIRE LENGTH OF WIRING SHALL BE REMOVED FOR ANY LENGTH OF WIRING THAT IS SHOWN TO BE REMOVED
3. EXISTING WIRING SHALL BE RECONNECTED TO THE NEW SEL–710 MOTOR PROTECTION RELAY. CONTRACTOR SHALL TRACE EXISTING WIRING TO THE CONNECTION POINT & DOCUMENT THE CONNECTION IN WRITING.

– DENOTES EXISTING DEVICE AND WIRING TO BE REMOVED. ITEM SHALL BE REMOVED FROM PREMISES AND DISPOSED OF PROPERLY, UNLESS OTHERWISE NOTED. UNLESS SPECIFICALLY SHOWN OTHERWISE, ALL EXISTING WIRING CONNECTED TO THE DEVICES SHOWN SHALL REMAIN AND SHALL BE RE–CONNECTED AS SHOWN IN THE DRAWINGS. REMOVE ALL WIRING WHERE INDICATED. PROVIDE A BLANK COVERPLATE TO COVER ANY OPENING RESULTING FROM A DEVICE BEING REMOVED FROM THE EXISTING SWITCHGEAR AND THE DEVICE IS NOT BEING REPLACED.

ENGINEER OF RECORD:
BOB E. HALLMAN, P.E.
FLORIDA REGISTRATION NO. 20761

Engineering Design Technologies Corp.
P.O. Box 152403
Tampa, FL 33684-2403
813.289.8080
813.282.9184 FAX
engineering@edt1.com
Certificate of Authorization Number: 4795

CITY of TAMPA
WASTEWATER DEPARTMENT

HFC AWTP SWITCHGEAR BLDG.
PROTECTIVE RELAY REPLACEMENT

EXISTING MAIN AIR COMPRESSORS (MAC)
EATON MP–3000 MOTOR PROTECTION RELAY
WIRING DIAGRAM TYP. FOR MAC–1 & MAC–2

NO.	DATE	REVISIONS

DRAWN: STK
DESIGN: BEH
QC: BEH
DATE: 08/13/18

SHEET E-44

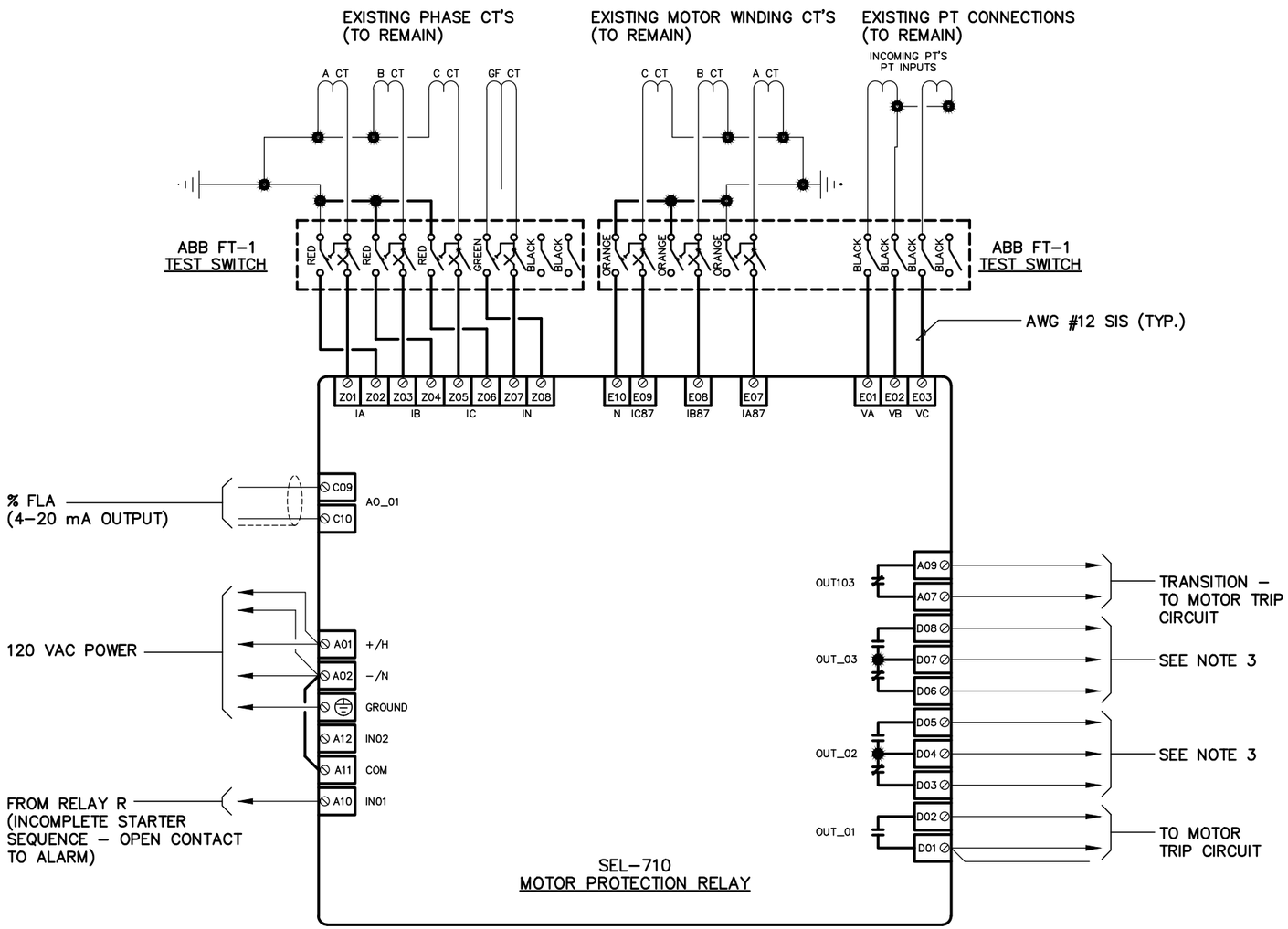

TYPICAL FOR MAC-1 & MAC-2

NOTES:

1. EXISTING INSTALLATIONS DENOTED ON THE DRAWINGS ARE FOR CONTRACTOR'S REFERENCE ONLY. ALL EXISTING INSTALLATIONS SHALL BE FIELD VERIFIED PRIOR TO COMMENCING CONSTRUCTION.
2. LIGHT LINES INDICATE EXISTING INSTALLATION/DEVICE/WIRING.
3. EXISTING WIRING SHALL BE RECONNECTED TO THE NEW SEL-710 MOTOR PROTECTION RELAY. CONTRACTOR SHALL TRACE EXISTING WIRING TO THE CONNECTION POINT & DOCUMENT THE CONNECTION IN WRITING.

ENGINEER OF RECORD:
BOB E. HALLMAN, P.E.
FLORIDA REGISTRATION NO. 20761

Engineering Design Technologies Corp.
P.O. Box 152403
Tampa, FL 33684-2403
813.289.8080
813.282.9184 FAX
engineering@edt1.com
Certificate of Authorization Number: 4795

CITY of TAMPA
WASTEWATER DEPARTMENT

HFC AWTP SWITCHGEAR BLDG.
PROTECTIVE RELAY REPLACEMENT

EXISTING MAIN AIR COMPRESSORS (MAC)
SEL-710 MOTOR PROTECTION RELAY
WIRING DIAGRAM TYP. FOR MAC-1 & MAC-2

NO.	DATE	REVISIONS

DRAWN: STK
DESIGN: BEH
QC: BEH
DATE: 08/13/18

SHEET E-45

SWITCHGEAR-1 WEST LINE-UP – "A" SECTION

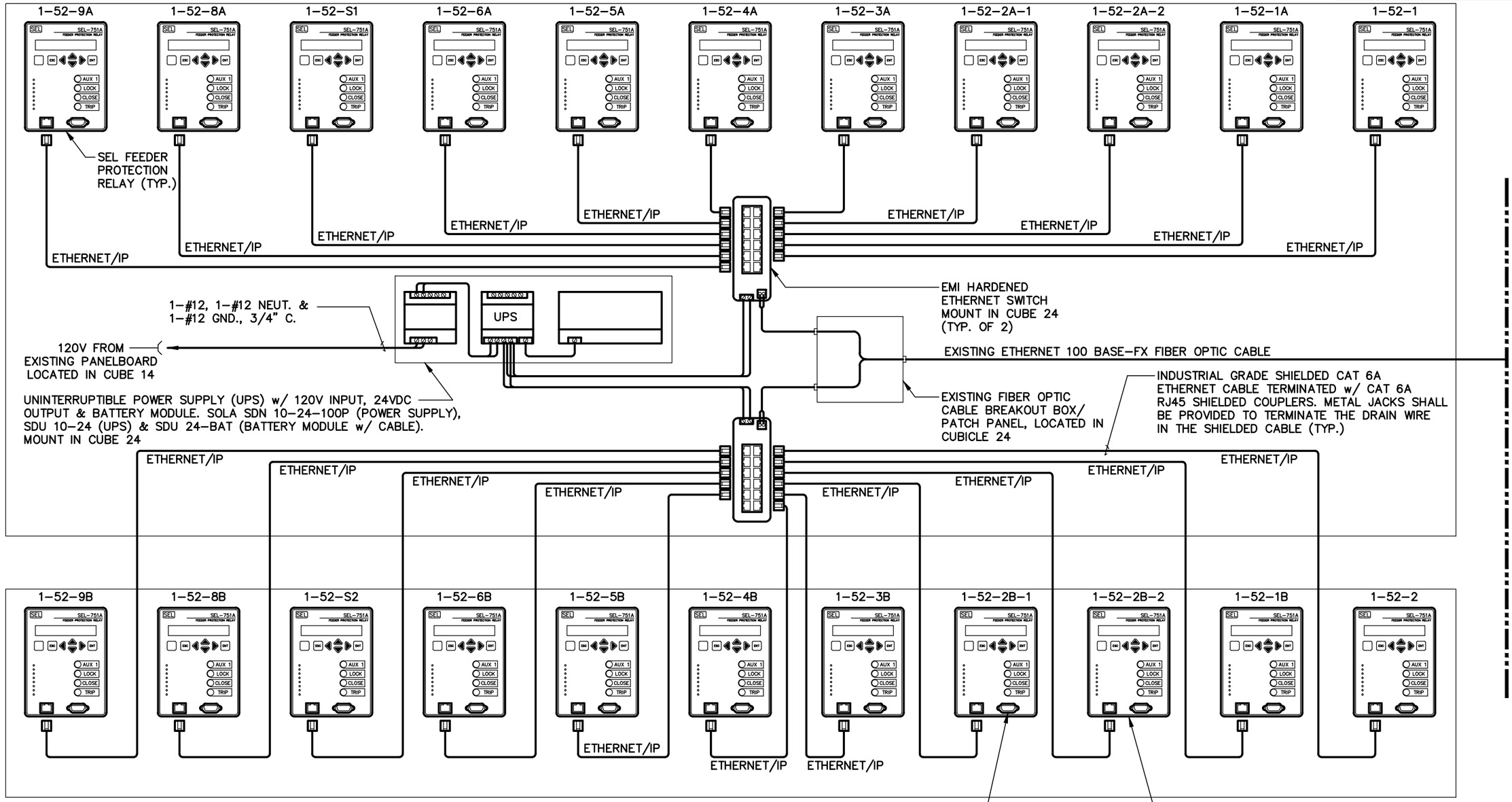

SWITCHGEAR-1 EAST LINE-UP – "B" SECTION

MATCHLINE – REFERENCE SHEET I-2 FOR CONTINUATION

ENGINEER OF RECORD:
BOB E. HALLMAN, P.E.
FLORIDA REGISTRATION NO. 20761

Engineering Design Technologies Corp.
P.O. Box 152403
Tampa, FL 33684-2403
813.289.8080
813.282.9184 FAX
engineering@edt1.com
Certificate of Authorization Number: 4795

CITY of TAMPA
WASTEWATER DEPARTMENT

HFC AWTP SWITCHGEAR BLDG.
PROTECTIVE RELAY REPLACEMENT

SWITCHGEAR NO.1 SEL RELAY NETWORKING DIAGRAM (SHEET 1 OF 2)

NO.	DATE	REVISIONS

DRAWN: STK
DESIGN: BEH
QC: BEH
DATE: 08/13/18

SHEET I-1

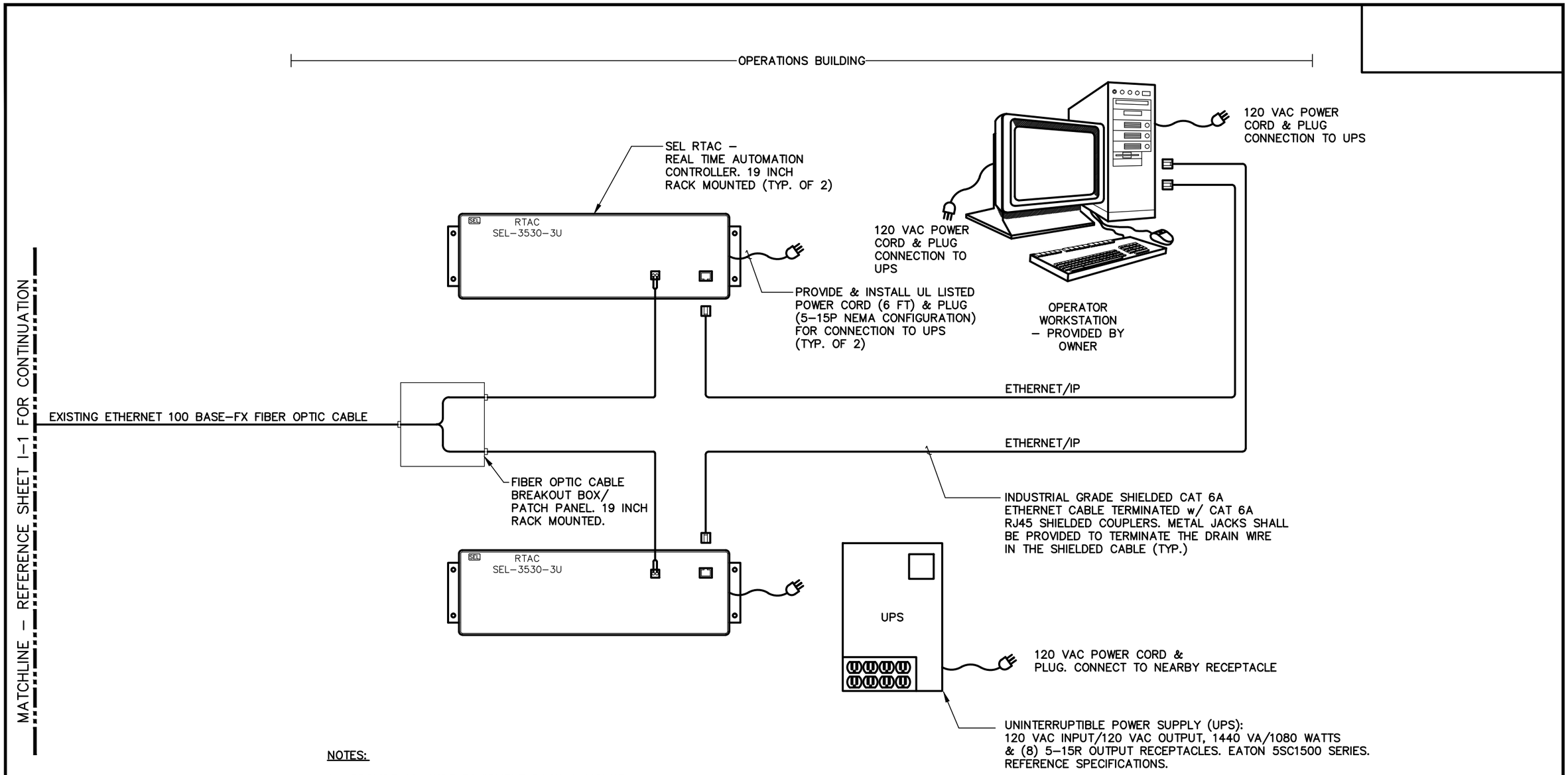

NOTES:

1. PROVIDE 19" WIDE EQUIPMENT RACK & MOUNT TWO (2) RTAC UNITS & FIBER OPTIC BREAKOUT BOX.
2. COORDINATE EQUIPMENT PLACEMENT & INSTALLATION IN THE OPERATIONS BUILDING w/ OWNER.

ENGINEER OF RECORD:
BOB E. HALLMAN, P.E.
FLORIDA REGISTRATION NO. 20761

Engineering Design Technologies Corp.
P.O. Box 152403
Tampa, FL 33684-2403
813.289.8080
813.282.9184 FAX
engineering@edt1.com
Certificate of Authorization Number: 4795

CITY of TAMPA
WASTEWATER DEPARTMENT

HFC AWTP SWITCHGEAR BLDG.
PROTECTIVE RELAY REPLACEMENT

SWITCHGEAR NO. 1 SEL RELAY
NETWORKING DIAGRAM
(SHEET 2 OF 2)

NO.	DATE	REVISIONS

DRAWN: STK
DESIGN: BEH
QC: BEH
DATE: 08/13/18

SHEET I-2