The Enclosed Document Is Provided For Your Convenience.

Please Email ALL Questions:

MailTo:ContractAdministration@TampaGov.net

City of Tampa
Contract Administration Department
306 E. Jackson St. #280A4N
Tampa, FL 33602
(813)274-8456

Addition To

New Tampa Recreation Center

17302 Commerce Park Blvd.
Tampa, FL. 33647

CONTRACT NO. 18-C-40

CONSTRUCTION DOCUMENTS

11-07-18

FGA PROJECT #18015

FleischmanGarcia

ARCHITECTURE • PLANNING • INTERIOR DESIGN

SAFETY HARBOR OFFICE
195 FOURTH AVENUE NORTH
SAFETY HARBOR, FLORIDA 34695
PHONE (727) 725-8880
FAX (727) 725-3900

TAMPA OFFICE
324 HYDE PARK AVENUE, SUITE 300
TAMPA, FLORIDA 33606
PHONE (813) 251-4400
FAX (813) 251-1994

SARASOTA OFFICE
5967 CATTLEMEN LANE, SUITE 6
SARASOTA, FLORIDA 34232
PHONE (941) 342-9293
FAX (941) 342-9253

REGISTRATION NUMBER AA C000123

CIVIL ENGINEER

AURORA CIVIL ENGINEERING

610 E. MORGAN STREET
BRANDON, FL. 33510

813-643-9907

STRUCTURAL ENGINEER

MASTER CONSULTING ENGINEERS

5523 WEST CYPRESS BLVD.
SUITE 200
TAMPA, FL. 33607

813-287-3600

MECHANICAL ENGINEER

ENGINEERING PROFESSIONALS, INC.

1720 WEST CLEVELAND STREET
SUITE E
TAMPA, FL. 33606

813-251-6848

ELECTRICAL ENGINEER

GENESIS ENGINEERING GROUP

2601 CATTLEMAN ROAD
SUITE 501
SARASOTA, FL. 34232
941-444-2189

LANDSCAPE ARCHITECT

EKISTICS DESIGN STUDIO

1202 WEST LINEBAUGH
TAMPA, FL. 33612

813-931-8040

TABLE OF CONTENTS

SHEET #	DESCRIPTION
---	COVER SHEET
CIVIL	
ISSUED UNDER SEPARATE COVER	
---	CIVIL COVER SHEET
C-1	GENERAL SITE PLAN
C-2	CONSTRUCTION NOTES
C-3	GRADING PLAN
C-4	UTILITY PLAN
C-5	DETAILS
C-6	CITY DETAILS
SP-1	STORM WATER POLLUTION PREVENTION PLAN
LANDSCAPE	
LA1.0	LANDSCAPE PLAN
LA2.0	LANDSCAPE SPECIFICATIONS & DETAILS
ARCHITECTURAL	
A0.0	REFERENCE SHEET
A0.1	LIFE SAFETY FLOOR PLAN
A1.1	ARCHITECTURAL SITE PLAN
A2.1	DEMOLITION PLAN
A2.2	OVERALL FLOOR PLAN
A2.3	INFORMATION AND DIMENSION FLOOR PLAN
A2.4	MECHANICAL PLATFORM PLAN
A2.5	ENLARGED TOILET PLANS & ELEVATIONS
A3.1	FINISH SCHEDULE & WALL TYPES
A4.1	OPENING SCHEDULE & FRAME TYPES
A4.2	FRAME DETAILS
A4.3	SIGN SCHEDULE AND DETAILS
A5.1	EXTERIOR ELEVATIONS
A5.1A	RENDERING
A5.2	EXTERIOR ELEVATIONS & DETAILS
A6.1	BUILDING SECTIONS
A6.2	BUILDING SECTIONS & WALL SECTIONS
A6.3	WALL SECTIONS
A6.4	WALL SECTIONS
A6.5	WALL SECTIONS
A7.1	INTERIOR ELEVATIONS
A7.2	INTERIOR ELEVATIONS & DETAILS
A8.1	REFLECTED CEILING PLAN
A9.1	ROOF PLAN & DETAILS
A9.2	ROOF DETAILS
STRUCTURAL	
S1.1	GENERAL STRUCTURAL NOTES
S1.2	WIND DESIGN DATA AND LOAD SCHEDULES
S1.3	STRUCTURAL INSPECTION PLAN
S2.1	FOUNDATION PLAN
S2.2	MECHANICAL PLATFORM FRAMING PLAN
S2.3	ROOF FRAMING PLAN
S3.1	TYPICAL DETAILS
S3.2	TYPICAL DETAILS
S3.3	TYPICAL DETAILS
S3.4	TYPICAL DETAILS
S4.1	WALL SECTIONS
S4.2	WALL SECTIONS
S4.3	WALL SECTIONS
S4.4	WALL SECTIONS
S4.5	WALL SECTIONS
MECHANICAL	
M1.0	DEMOLITION PLAN - MECHANICAL
M1.1	FLOOR PLAN - MECHANICAL
M1.2	MECHANICAL PLATFORM PLAN
M2.1	MECHANICAL SCHEDULES
M2.2	MECHANICAL DETAILS
M2.3	MECHANICAL CONTROL DETAILS
PLUMBING	
P0.0	PLUMBING NOTES, LEGENDS, SCHEDULES & DETAILS
P1.0	FLOOR PLAN - PLUMBING
P2.0	ENLARGED FLOOR PLANS - WASTE & VENT
FIRE PROTECTION	
FP0.0	FIRE PROTECTION NOTES AND LEGENDS
FP1.1	FLOOR PLAN - FIRE PROTECTION
FP1.2	SITE PLAN & MECHANICAL PLATFORM FLOOR PLAN - FIRE PROTECTION
FP5.1	DETAILS - FIRE PROTECTION
ELECTRICAL	
E0.1	ELECTRICAL NOTES AND LEGENDS
E0.2	ELECTRICAL SPECIFICATIONS AND GENERAL NOTES
E0.3	ELECTRICAL SPECIFICATIONS
E0.4	ELECTRICAL SPECIFICATIONS
E1.1	DEMOLITION FLOOR PLAN - ELECTRICAL
E2.0	RENOVATION FLOOR PLAN - POWER
E2.1	RENOVATION FLOOR PLAN - SYSTEMS
E3.1	RENOVATION FLOOR PLAN - LIGHTING
E4.1	MECHANICAL PLATFORM FLOOR PLAN - LIGHTING, POWER & SYSTEMS
E5.1	ELECTRICAL SCHEDULES AND NOTES
E5.2	ELECTRICAL SCHEDULES AND NOTES
E5.3	ELECTRICAL SCHEDULES AND NOTES
E6.1	ELECTRICAL POWER RISER DIAGRAM
E6.2	FIRE ALARM SYSTEM RISER DIAGRAM AND NOTES
E7.1	ELECTRICAL DETAILS
E7.2	ELECTRICAL DETAILS
E7.3	ELECTRICAL DETAILS

SITE LOCATION MAP

NTS

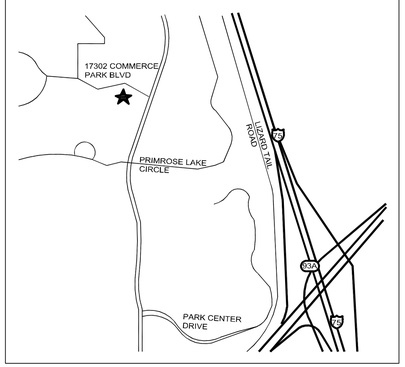

PROJ#18015 NEW TAMPA RECREATION CENTER
ADDITION
11-07-18

SITE CONSTRUCTION PLANS

FOR

NEW TAMPA REC EXPANSION

17302 COMMERCE PARK

TAMPA, FL

INDEX OF DRAWINGS

DRAWING TITLE	SHEET NO.	LATEST DATE
COVER SHEET		
GENERAL SITE PLAN	C-1	11/28/2018
CONSTRUCTION NOTES AND TESTING SCHEDULE	C-2	11/28/2018
GRADING PLAN	C-3	11/28/2018
UTILITY PLAN	C-4	11/28/2018
MISCELLANEOUS DETAILS	C-5	11/28/2018
CITY DETAILS	C-6	11/28/2018
STORMWATER POLLUTION PREVENTION PLAN	SP-1	11/28/2018

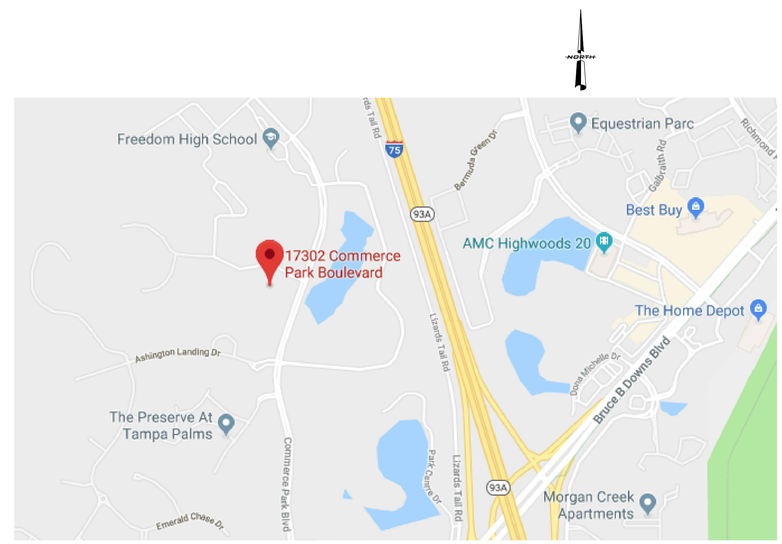

15 / 27E / 19S

SITE DATA:
ADDRESS: 17302 COMMERCE PARK, TAMPA
PROPERTY ACREAGE: 55.96 AC
PROJECT ACREAGE: 5 AC
PIN: A-15-27-19-ZZZ-000001-20706.2
FOLIO: 033969-0160
FLOODZONE: X PER 12057C0070H EFFECTIVE 8/28/2008

LOCATION MAP

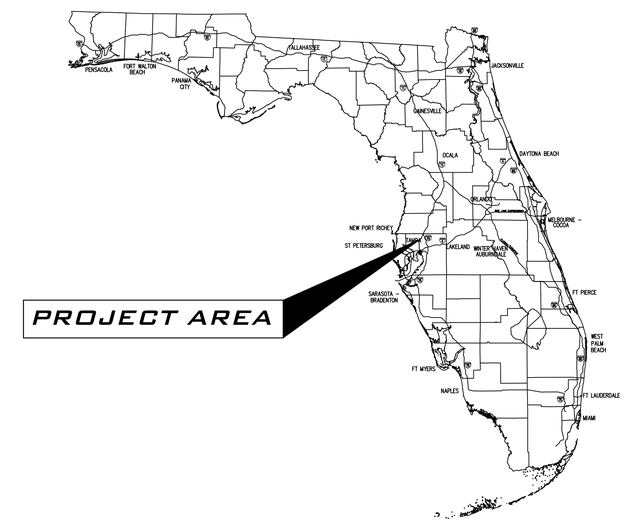

PREPARED BY

AURORA
CIVIL ENGINEERING, INC
610 E. Morgan Street Brandon, FL 33510 (813)643-9907

PREPARED FOR

CITY OF TAMPA

306 E. JACKSON ST

TAMPA, FL 33602

This item has been electronically signed and sealed by Christopher E. Weddle, PE on 11/28/2018 using a Digital Signature.

Printed copies of this document are not considered signed and sealed and the signature must be verified on any electronic copies.

CHRISTOPHER E. WEDDLE, P.E.
FLORIDA P.E. No. 35446
AURORA CIVIL ENGINEERING, INC.
CERTIFICATE OF AUTHORIZATION No. 00008909

NOVEMBER 28TH, 2018

NEW TAMPA REC EXPANSION

AURORA
CIVIL ENGINEERING, INC
610 E. Morgan Street Brandon, FL 33510 (813)643-9907

PROJECT 18-127

File: R:\Projects\FCA New Tampa Recreation Center\Plans\New Tampa Rec PlotNet 11/28/2018 9:48 AM by AARON SILVERBERG Sheet: 11/20/2018 1:47 PM by AARON

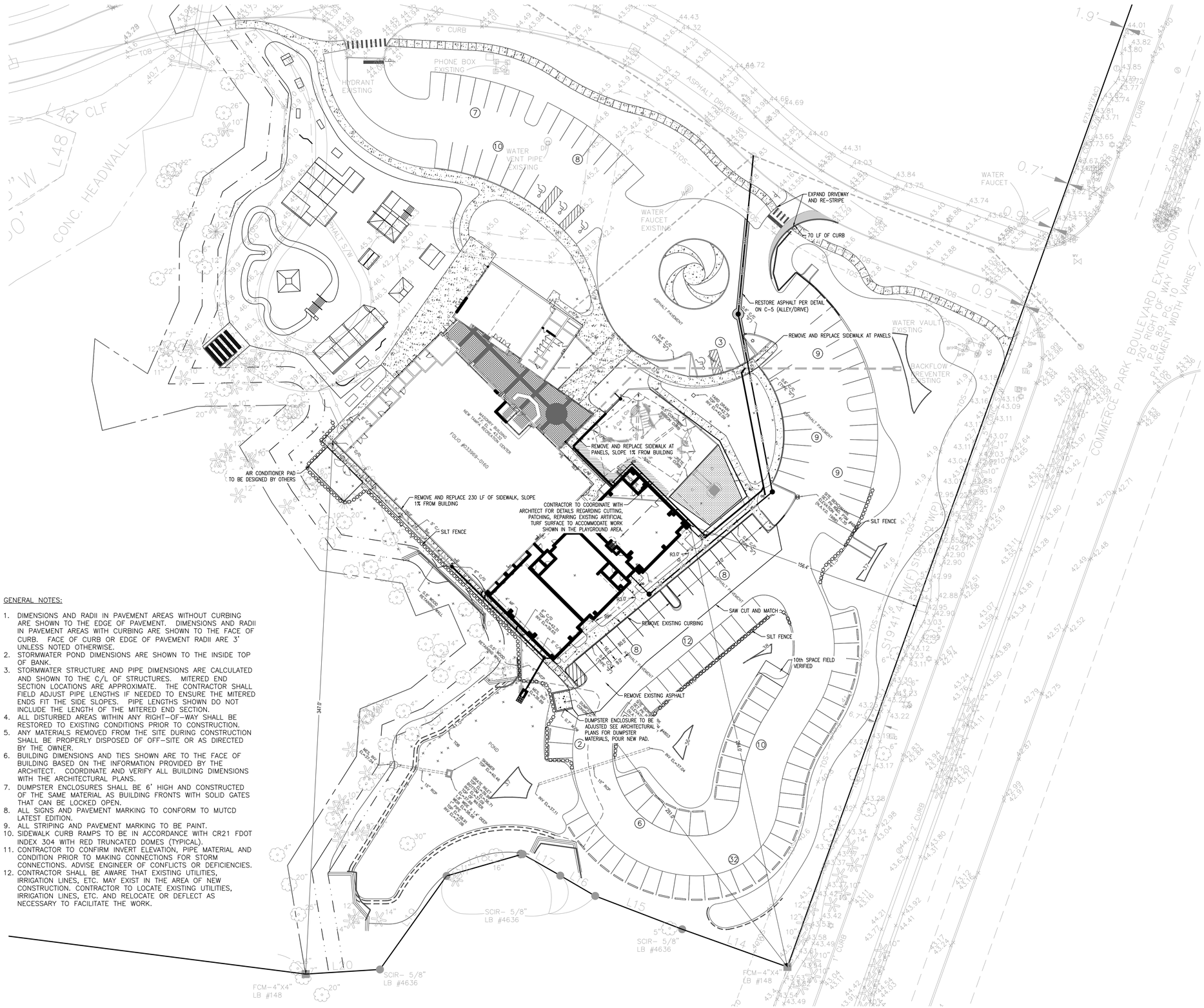

GENERAL NOTES:

1. DIMENSIONS AND RADII IN PAVEMENT AREAS WITHOUT CURBING ARE SHOWN TO THE EDGE OF PAVEMENT. DIMENSIONS AND RADII IN PAVEMENT AREAS WITH CURBING ARE SHOWN TO THE FACE OF CURB. FACE OF CURB OR EDGE OF PAVEMENT RADII ARE 3' UNLESS NOTED OTHERWISE.
2. STORMWATER POND DIMENSIONS ARE SHOWN TO THE INSIDE TOP OF BANK.
3. STORMWATER STRUCTURE AND PIPE DIMENSIONS ARE CALCULATED AND SHOWN TO THE C/L OF STRUCTURES. MITERED END SECTION LOCATIONS ARE APPROXIMATE. THE CONTRACTOR SHALL FIELD ADJUST PIPE LENGTHS IF NEEDED TO ENSURE THE MITERED ENDS FIT THE SIDE SLOPES. PIPE LENGTHS SHOWN DO NOT INCLUDE THE LENGTH OF THE MITERED END SECTION.
4. ALL DISTURBED AREAS WITHIN ANY RIGHT-OF-WAY SHALL BE RESTORED TO EXISTING CONDITIONS PRIOR TO CONSTRUCTION.
5. ANY MATERIALS REMOVED FROM THE SITE DURING CONSTRUCTION SHALL BE PROPERLY DISPOSED OF OFF-SITE OR AS DIRECTED BY THE OWNER.
6. BUILDING DIMENSIONS AND TIES SHOWN ARE TO THE FACE OF BUILDING BASED ON THE INFORMATION PROVIDED BY THE ARCHITECT. COORDINATE AND VERIFY ALL BUILDING DIMENSIONS WITH THE ARCHITECTURAL PLANS.
7. DUMPSTER ENCLOSURES SHALL BE 6' HIGH AND CONSTRUCTED OF THE SAME MATERIAL AS BUILDING FRONTS WITH SOLID GATES THAT CAN BE LOCKED OPEN.
8. ALL SIGNS AND PAVEMENT MARKING TO CONFORM TO MUTCD LATEST EDITION.
9. ALL STRIPING AND PAVEMENT MARKING TO BE PAINT.
10. SIDEWALK CURB RAMPS TO BE IN ACCORDANCE WITH CR21 FDOT INDEX 304 WITH RED TRUNCATED DOMES (TYPICAL).
11. CONTRACTOR TO CONFIRM INVERT ELEVATION, PIPE MATERIAL AND CONDITION PRIOR TO MAKING CONNECTIONS FOR STORM CONNECTIONS. ADVISE ENGINEER OF CONFLICTS OR DEFICIENCIES.
12. CONTRACTOR SHALL BE AWARE THAT EXISTING UTILITIES, IRRIGATION LINES, ETC. MAY EXIST IN THE AREA OF NEW CONSTRUCTION. CONTRACTOR TO LOCATE EXISTING UTILITIES, IRRIGATION LINES, ETC. AND RELOCATE OR DEFLECT AS NECESSARY TO FACILITATE THE WORK.

SITE DATA
PROJECT ACREAGE: 55.96
PARCEL ID: A-15-27-19-ZZZ-000001-20706.2
FOLIO: 033969-0160

OWNER: CITY OF TAMPA
SECTION 15 / TOWNSHIP 27S / RANGE 19E
CURRENT ZONING: PD-A
LAND USE CODE: 8900 MUNICIPAL
PROPOSED USE: RECREATIONAL FACILITY
FUTURE LAND USE: MAJOR ENVIRONMENTALLY SENSITIVE AREAS
FLOOD ZONE: X
FEMA FLOOD MAP: 12057C0070H

MAX BLDG HEIGHT: 55

MINIMUM BUFFERS:
NORTH & EAST:AVERAGE 15' WIDE WITH A MINIMUM WIDTH OF 10' AND AN 18"HIGH CONTINUOUS BERM
WEST & SOUTH: 10'

PROPOSED BUILDING AREA: 7,875 SF

PARKING REQUIREMENTS:
5 SPACES PER 1,000 SQ FT
EXISTING BUILDING (19,121 SF):
PROPOSED EXPANSION (7,476 SF):
TOTAL BUILDING (26,597 SF) 133 SPACES

PARKING PROVIDED: 133 SPACES
STANDARD SPACES(9'x18'): 49
COMPACT SPACES(9'x16'): 80
ACCESSIBLE SPACES(12'x18' W/5' ADJACENT AISLE): 4

TOTAL BLDG FOOTPRINT: 27,509 SF / 0.63 AC
ONSITE PAVEMENT: 4.42 AC
TOTAL IMPERVIOUS: 5.31 AC
TOTAL OPEN SPACE: 50.56 AC

SOILD WASTE NOTES:
1. THE SITE SHALL COMPLY WITH CHAPTER 28- SOLID WASTE.
2. THE SCREENING ENCLOSURE SHALL BE A MINIMUM OF 6' IN HEIGHT AND MADE COMPATIBLE WITH THE MATERIALS ON THE FRONT BUILDING WALL OF THE MAIN BUILDING. THE MINIMUM INTERIOR DIMENSIONS FOR EACH DUMPSTER ENCLOSURE SHALL BE 10' WIDE X 10' DEEP WITH A MINIMUM 10' WIDE DOOR OPENING WHICH IS FREE AND CLEAR FROM ANY OBSTRUCTIONS.
3. THE OPENING DOORS SHALL BE CONSTRUCTED OF SOLID/OPAQUE MATERIAL AND WILL HAVE LOCKING PINS TO HOLD THEM OPEN DURING SERVICE. THE DOORS SHALL HAVE THE SAME MINIMUM FREE AND CLEAR OPENING WIDTH AS THE ENCLOSURE (MIN.10' WIDE OPENING). IN ORDER NOT TO REDUCE THE OPENING WIDTH, ALL HARDWARE FOR THE DOORS SHALL BE ATTACHED TO THE OUTSIDE/FACE OF THE ENCLOSURE OR THE ENCLOSURE SHALL BE WIDENED TO ALLOW FOR THE MINIMUM DOOR OPENING.
4. A MINIMUM OF (2) SAFETY BOLLARDS SHALL BE INSTALLED WITHIN 2' OF THE REAR INTERIOR WALL OF ALL DUMPSTER, COMPACTOR AND ROLL-OFF ENCLOSURES. (TWO BOLLARDS FOR EACH DUMPSTER)
5. A GRADE LEVEL CONCRETE SLAB AT A MINIMUM 6" THICK/4,000 POUNDS PER SQUARE INCH SHALL BE PLACED FOR THE DUMPSTER TO BE SET ON.
6. A MINIMUM 26' VERTICAL CLEARANCE SHALL BE PROVIDED OVER THE DUMPSTER
AND OVER THE SERVICE VEHICLE AT THE POINT OF COLLECTION.
7. ALL SOLID WASTE VEHICLE DRIVE AISLES AND SOLID WASTE VEHICLE MANEUVERING AREAS (OUTSIDE OF THE COLLECTION AREAS) SHALL PROVIDE A MINIMUM 16' CLEARANCE FROM FINISHED GRADE LEVEL TO LOWEST PART OF OVERHEAD STRUCTURE/TREE CANOPY.
8. ALL SOLID WASTE VEHICLE DRIVE AISLES AND SOLID WASTE VEHICLE MANEUVERING AREAS SHALL BE CONSTRUCTED TO CURRENT STATE OF FLORIDA, DEPARTMENT OF TRANSPORTATION, STANDARD SPECIFICATIONS FOR ROAD AND BRIDGE CONSTRUCTION.

REVISIONS					
5					
4					
3					
2					
1					
NO.	BY	DATE	DESCRIPTION		

DRAWN BY: AARON SILVERBERG
CHECKED BY: CHRIS WEDDLE
DATE: 11-28-2018
APPROVED BY: CHRIS WEDDLE
JOB NO.: 18-127

GENERAL SITE PLAN

NEW TAMPA RECREATION ADDITION

TAMPA, FL 33647

AURORA CIVIL ENGINEERING, INC
610 E. Morgan Street Brandon, FL 33510 (813)643-9907

This item has been electronically signed and sealed by Christopher E. Weddle, P.E. on 11/28/2018 using a Digital Signature.
Printed copies of this document are not considered signed and sealed and the signature must be verified on any electronic copies.

CHRISTOPHER E. WEDDLE, P.E.
FLORIDA P.E. No. 35446
AURORA CIVIL ENGINEERING, INC.
CERTIFICATE OF AUTHORIZATION No. 0000028929

C-1

File: P:\Projects\FCA New Tampa Recreation Center\Plans\New Tampa Rec. Plot.dwg Layout: 11/28/2018 9:48 AM by AARON SILVERBERG

I. MISCELLANEOUS

A. THE CONTRACTOR SHALL BECOME FAMILIAR WITH THE PERMIT AND INSPECTION REQUIREMENTS SPECIFIED BY THE VARIOUS GOVERNMENTAL AGENCIES, THE ENGINEER, AND THE ARCHITECT. THE CONTRACTOR SHALL OBTAIN ALL NECESSARY PERMITS PRIOR TO CONSTRUCTION, AND SCHEDULE ANY NECESSARY INSPECTIONS ACCORDING TO AGENCY INSTRUCTIONS.

B. ALL SPECIFICATIONS AND DOCUMENTS REFEREED TO IN THESE PLANS SHALL BE OF THE LATEST REVISION.

C. ALL WORK PERFORMED SHALL COMPLY WITH THE REGULATIONS AND ORDINANCES OF THE VARIOUS GOVERNMENTAL AGENCIES HAVING JURISDICTION OVER THE WORK.

D. THE CONTRACTOR SHALL SUBMIT SHOP DRAWINGS ON ALL PRECAST AND MANUFACTURED ITEMS TO THE OWNER'S ENGINEER FOR APPROVALS. FAILURE TO OBTAIN APPROVALS BEFORE INSTALLATION MAY RESULT IN REMOVAL AND REPLACEMENT AT THE CONTRACTOR'S EXPENSE.

E. WORK PERFORMED UNDER THIS CONTRACT SHALL INTERFACE SMOOTHLY WITH OTHER WORK BEING PERFORMED ON SITE BY OTHER CONTRACTORS AND UTILITY COMPANIES. IT WILL BE NECESSARY FOR THE CONTRACTOR TO COORDINATE AND SCHEDULE HIS ACTIVITIES WHERE NECESSARY, WITH OTHER CONTRACTORS AND UTILITY COMPANIES.

F. THE WATER, SANITARY SEWER, AND STORM DRAINAGE FACILITIES ARE SUBJECT TO THE REVIEW AND APPROVAL OF THE CITY OF TAMPA AND IT SHALL BE THE RESPONSIBILITY OF THE CONTRACTOR TO OBTAIN THE REQUIRED PERMITS TO PERFORM WORK IN THE PUBLIC RIGHTS-OF-WAYS.

G. IT WILL BE NECESSARY TO EXAMINE, COORDINATE AND ADJUST ACCORDING TO THE PROPOSED LOCATIONS OF THE VARIOUS COMPONENTS OF THE SITE UTILITIES. IT WILL BE THE RESPONSIBILITY OF THE CONTRACTOR TO SUBMIT COORDINATION DRAWINGS SHOWING PIPE SIZES, STRUCTURES, AND ELEVATIONS. THE CONTRACTOR SHALL BE RESPONSIBLE FOR THE SCHEDULING AND COORDINATION OF ALL THE UNDERGROUND WORK ASSOCIATED WITH THIS PROJECT.

H. ALL MECHANICAL EQUIPMENT SHALL BE SCREENED FROM VIEW, WHEN POSSIBLE.

II. SAFETY

A. DURING THE CONSTRUCTION AND MAINTENANCE OF THIS PROJECT, ALL SAFETY REGULATIONS ARE TO BE ENFORCED. THE CONTRACTOR OR HIS REPRESENTATIVE SHALL BE RESPONSIBLE FOR THE CONTROL AND SAFETY OF THE TRAVELING PUBLIC AND THE THE SAFETY OF HIS PERSONNEL.

B. THE CONTRACTOR'S MAINTENANCE OF TRAFFIC PLAN MUST BE SUBMITTED TO AND APPROVED BY THE CITY OF TAMPA PRIOR TO BEGINNING ANY CONSTRUCTION ACTIVITIES.

C. LABOR SAFETY REGULATIONS SHALL CONFORM TO THE PROVISIONS SET FORTH BY OSHA.

D. THE CONTRACTOR SHALL PROVIDE AND MAINTAIN ITS OWN SAFETY EQUIPMENT IN ACCORDANCE WITH ITS HEALTH AND SAFETY PROGRAM REQUIREMENTS. THE CONTRACTOR IS ALSO RESPONSIBLE FOR PROVIDING ITS EMPLOYEES AND SUB CONTRACTORS WITH ADEQUATE INFORMATION AND TRAINING TO ENSURE THAT ALL EMPLOYEES, SUB CONTRACTORS, AND SUB CONTRACTORS EMPLOYEES COMPLY WITH ALL APPLICABLE REQUIREMENTS. THE CONTRACTOR SHALL REMAIN IN COMPLIANCE WITH ALL OSHA OR OCCUPATIONAL REGULATIONS AS WELL AS THE ENVIRONMENTAL PROTECTION LAWS.

THE FOLLOWING IS NOT TO BE PERCEIVED AS THE ENTIRE SAFETY PROGRAM BUT JUST AS BASIC REQUIREMENTS.

E. ALL EXCAVATIONS BY THE THE CONTRACTOR SHALL CONFORM TO THE REQUIREMENTS OF THE DEPARTMENT OF LABOR'S OCCUPATIONAL SAFETY AND HEALTH ADMINISTRATION RULES AND REGULATIONS. PARTICULAR ATTENTION MUST BE PAID TO THE CONSTRUCTION STANDARDS FOR EXCAVATIONS, 29 CFR PART 1926, SUBPART P.

F. THE MINIMUM STANDARDS AS SET FORTH IN THE CURRENT EDITION OF "THE STATE OF FLORIDA, MANUAL ON TRAFFIC CONTROL AND SAFE PRACTICES FOR STREET AND HIGHWAY CONSTRUCTION, MAINTENANCE AND UTILITY OPERATIONS" SHALL BE FOLLOWED IN THE DESIGN APPLICATION, INSTALLATION, MAINTENANCE AND REMOVAL OF ALL TRAFFIC CONTROL DEVICES, WARNING DEVICES AND BARRIERS NECESSARY TO PROTECT THE PUBLIC AND WORKMEN FROM HAZARDS WITHIN THE PROJECT LIMITS.

G. ALL TRAFFIC CONTROL MARKINGS AND DEVICES SHALL CONFORM TO THE PROVISIONS SET FORTH IN THE MANUAL ON UNIFORM TRAFFIC CONTROL DEVICES PREPARED BY THE U.S. DEPARTMENT OF TRANSPORTATION FEDERAL HIGHWAY ADMINISTRATION.

H. IT SHALL BE THE SOLE RESPONSIBILITY OF THE CONTRACTOR TO COMPLY AND ENFORCE ALL APPLICABLE SAFETY REGULATIONS. THE ABOVE INFORMATION HAS BEEN PROVIDED FOR THE CONTRACTOR'S INFORMATION ONLY AND DOES NOT IMPLY THAT THE OWNER OR ENGINEER WILL INSPECT AND/OR ENFORCE SAFETY REGULATIONS.

I. THE CONTRACTOR SHALL EXERCISE EXTREME CAUTION IN AREAS OF BURIED UTILITIES AND SHALL PROVIDE AT LEAST 48 HOURS NOTICE TO THE UTILITY COMPANIES PRIOR TO CONSTRUCTION TO OBTAIN FIELD LOCATIONS OF EXISTING UNDERGROUND UTILITIES. CALL SUNSHINE ONE AT (800)-432-4770.

J. THE CONTRACTOR IS RESPONSIBLE FOR REPAIRING ANY DAMAGE TO EXISTING FACILITIES, ABOVE OR BELOW GROUND, THAT MAY OCCUR AS A RESULT OF THE WORK PERFORMED BY THE CONTRACTOR CALLED FOR IN THIS CONTRACT.

K. ALL UNDERGROUND UTILITIES MUST BE IN PLACE AND TESTED OR INSPECTED AS REQUIRED PRIOR TO BASE AND PAVEMENT CONSTRUCTION.

III. SITE PLAN AND COORDINATE CONTROL

A. ARCHITECTURAL BUILDING PLANS PREPARED BY: FLEISCHMAN GARCIA ARCHITECTURE

B. SITE PLAN PREPARED BY AURORA CIVIL BASED ON CONCEPTUAL LAYOUT FURNISHED BY FLEISCHMAN GARCIA ARCHITECTURE

C. STRUCTURAL PLANS PREPARED BY: OTHERS

D. ELECTRICAL AND MECHANICAL PLANS PREPARED BY: OTHERS

E. SUBSURFACE INVESTIGATION PREPARED BY: OTHERS

F. SURVEYS PREPARED BY: W.C. SHERRILL AND COMPANY, LLC

G. LANDSCAPE PLANS PREPARED BY: OTHERS

H. ALL POINTS AND MONUMENTS SHALL BE SURVEYED UPON MOBILIZATION TO VERIFY THEIR ACCURACY. ANY DISCREPANCIES DISCOVERED MUST BE BROUGHT TO THE ATTENTION OF THE ENGINEER IN WRITING.

I. MONUMENTS AND OTHER SURVEY CONTROL POINTS SHALL BE PROTECTED FROM DAMAGE AND DISTURBANCE. IF ANY CONTROL POINTS ARE DAMAGED OR DISTURBED, IT SHALL BE THE RESPONSIBILITY OF THE CONTRACTOR TO NOTIFY THE ENGINEER AND REPLACE THE CONTROL POINTS TO THEIR ORIGINAL CONDITION AT HIS OWN EXPENSE.

J. REFER TO THE GRADING SHEET AND/OR THE TOPOGRAPHIC SURVEYS FOR NOTES REGARDING THE BASIS OF VERTICAL DATUM.

K. LOCATIONS, ELEVATIONS AND DIMENSIONS OF EXISTING UTILITIES, STRUCTURES AND OTHER FEATURES ARE SHOWN ACCORDING TO THE BEST INFORMATION AVAILABLE AT THE TIME OF PREPARATION OF THESE PLANS. THE CONTRACTOR SHALL VERIFY THE LOCATIONS, ELEVATIONS AND DIMENSIONS OF ALL EXISTING UTILITIES, STRUCTURES AND OTHER FEATURES AFFECTING THIS WORK PRIOR TO CONSTRUCTION.

L. UPON COMPLETION OF CONSTRUCTION, THE CONTRACTOR SHALL FURNISH THE OWNER'S ENGINEER WITH COMPLETE "AS-BUILT" INFORMATION CERTIFIED BY A REGISTERED LAND SURVEYOR. THE "AS-BUILT" INFORMATION SHALL BE FURNISHED TO THE ENGINEER IN A LEGIBLE FORMAT MARKED ON FULL SIZE PRINTS OF THE APPROPRIATE PLAN SHEETS, OR IN A LEGIBLE FORMAT ON LETTER OR LEGAL SIZE SKETCHES. THE ENGINEER MUST BE ABLE TO COMPILE THIS INFORMATION ONTO THE ORIGINAL PLAN DOCUMENTS FOR SUBMITTAL TO THE APPROPRIATE AGENCIES FOR FINAL APPROVALS.

THE "AS-BUILT" INFORMATION SHALL CLEARLY AND ACCURATELY REPRESENT ALL CONSTRUCTED ITEMS INCLUDING, BUT NOT LIMITED TO THE FOLLOWING:

1. ELEVATIONS OF ALL STORM SEWER AND SANITARY SEWER STRUCTURE BOTTOMS, TOPS, AND INVERTS.

2. FIELD MEASURED LENGTHS OF PIPES FOR ALL INSTALLED UTILITIES, CONDUITS, SLEEVES, ETC.

3. LOCATIONS OF ALL STRUCTURES, PIPES, CONDUITS, SLEEVES, ETC.

4. CALCULATED SLOPE OF ALL SANITARY SEWER AND STORM SEWER LINES.

5. HORIZONTAL AND VERTICAL CONTROL OF ALL WATER MAIN FITTINGS AND APPURTENANCES, AND HORIZONTAL AND VERTICAL CONTROL OF THE TOPS OF WATER MAINS AT ALL CROSSINGS, AND A MINIMUM OF EVERY 200 LINEAL FEET OF PIPE.

6. HORIZONTAL AND VERTICAL CONTROL OF ALL TOP OF BANKS, TOE OF SLOPES, ALL GRADE BREAKS, BUILDINGS, PONDS, DITCHES, BRIDGES, LITTORAL ZONES, ETC.

7. HORIZONTAL AND VERTICAL CONTROL ELEVATIONS OF ALL ELEMENTS OF SANITARY SEWER LIFT STATIONS INCLUDING TOP AND BOTTOM SLABS, INVERTS, ELEVATIONS AT WHICH THE FLOAT SWITCHES ENGAGE, ALL VALVES AND ASSOCIATED APPURTENANCES.

NO ENGINEER'S CERTIFICATE CAN BE SUBMITTED TO OBTAIN A CERTIFICATE OF OCCUPANCY UNTIL THE "AS-BUILT" INFORMATION IS RECEIVED, REVIEWED, AND APPROVED BY THE ENGINEER AND THE APPROPRIATE AGENCIES. THE CONTRACTOR SHALL ALLOW THE ENGINEER A MINIMUM OF FOUR WEEKS UPON RECEIPT TO COMPLETE THE REVIEW OF THE "AS-BUILT" INFORMATION AND COMPILE THE NECESSARY DRAWINGS FOR SUBMITTAL TO THE APPROPRIATE AGENCIES.

M. ALL DIMENSIONS SHOWN ON THE PLANS ARE TO FACE OF BUILDING, FACE OF CURBING, OR CENTERLINES OF STRUCTURES, UNLESS OTHERWISE NOTED ON THE PLANS.

IV. CLEARING / DEMOLITION

A. PRIOR TO ANY SITE CLEARING, ALL TREES SHOWN TO REMAIN AS INDICATED ON THE CONSTRUCTION AND LANDSCAPE PLANS SHALL BE PROTECTED IN ACCORDANCE WITH LOCAL TREE ORDINANCES AS WELL AS DETAILS AND NOTES PROVIDED IN THIS PLAN SET. IT SHALL BE THE CONTRACTOR'S RESPONSIBILITY TO MAINTAIN THESE TREES IN GOOD CONDITION. NO TREE SHOWN TO REMAIN SHALL BE REMOVED WITHOUT WRITTEN APPROVAL FROM THE CITY OF TAMPA.

B. THE CONTRACTOR IS TO PREPARE THE SITE PRIOR TO BEGINNING ACTUAL CONSTRUCTION IN ACCORDANCE WITH THE GEOTECHNICAL REPORT. COPIES OF THE SOILS REPORT ARE AVAILABLE THROUGH THE OWNER. QUESTIONS REGARDING SITE PREPARATION REQUIREMENTS DESCRIBED IN THE SOILS REPORT ARE TO BE DIRECTED TO THE SOILS TESTING COMPANY.

C. THE CONTRACTOR SHALL CLEAR AND GRUB ONLY THOSE PORTIONS OF THE SITE NECESSARY FOR CONSTRUCTION. DISTURBED AREAS WILL BE SEEDED, MULCHED, SODDED OR PLANTED WITH OTHER APPROVED LANDSCAPE MATERIALS IMMEDIATELY FOLLOWING CONSTRUCTION.

D. ALL CONSTRUCTION DEBRIS AND OTHER WASTE MATERIALS SHALL BE DISPOSED OF OFF-SITE IN ACCORDANCE WITH APPLICABLE REGULATORY AGENCY REQUIREMENTS, OR AS DIRECTED BY THE OWNER.

V. PAVING AND GRADING

A. ALL DELETERIOUS SUBSURFACE MATERIAL, (I.E. MUCK, PEAT, BURIED DEBRIS), IS TO BE EXCAVATED IN ACCORDANCE WITH THESE PLANS OR AS DIRECTED BY THE OWNER, THE OWNER'S ENGINEER, OR THE OWNER'S SOIL TESTING COMPANY. DELETERIOUS MATERIAL IS TO BE STOCKPILED OR REMOVED FROM THE SITE AS DIRECTED BY OWNER. EXCAVATED AREAS TO BE BACKFILLED WITH APPROPRIATE MATERIALS AND COMPACTED AS SHOWN ON THESE PLANS. THE CONTRACTOR IS RESPONSIBLE FOR ACQUIRING ANY PERMITS THAT ARE NECESSARY FOR REMOVING DELETERIOUS MATERIAL FROM THE SITE.

B. THE CONTRACTOR SHALL BE RESPONSIBLE FOR PROTECTING EXCAVATIONS AGAINST COLLAPSE AND WILL PROVIDE BRACING, SHEETING OR SHORING AS NECESSARY. DEWATERING METHODS SHALL BE USED AS REQUIRED TO KEEP TRENCHES DRY WHILE PIPE AND APPURTENANCES ARE BEING PLACED.

C. ALL NECESSARY FILL AND EMBANKMENT THAT IS PLACED DURING CONSTRUCTION SHALL CONSIST OF MATERIAL SPECIFIED BY THE OWNER'S SOIL TESTING COMPANY OR ENGINEER AND BE PLACED AND COMPACTED ACCORDING TO THESE PLANS OR THE REFERENCED SOIL REPORT.

D. PROPOSED SPOT ELEVATIONS REPRESENT FINISHED PAVEMENT OR GROUND SURFACE GRADES UNLESS OTHERWISE NOTED ON PLANS. FINISHED GRADES OR CONTOURS IN SODDED AREAS REPRESENT FINISH GRADES AFTER PLACEMENT OF SOD.

E. THE CONTRACTOR SHALL TRIM, TACK AND MATCH EXISTING PAVEMENT AT LOCATIONS WHERE NEW PAVEMENT MEETS EXISTING PAVEMENT.

F. CURBING WILL BE PLACED AT THE EDGE OF ALL PAVEMENT, WHERE SHOWN ON THE PLANS.

G. REFER TO THE LATEST EDITION OF F.D.O.T. "ROADWAY AND TRAFFIC DESIGN STANDARDS" FOR DETAILS AND SPECIFICATIONS OF ALL F.D.O.T. CURBING AND GUTTERS CALLED FOR IN THESE PLANS. REFER TO DETAILS IN THESE PLANS FOR MODIFIED CURB DETAILS.

H. CONTRACTOR TO PROVIDE 1/2" TO 1" BITUMINOUS EXPANSION JOINT MATERIAL WITH SEALER AT ABUTMENT OF CONCRETE AND OTHER MATERIALS, (BUILDINGS, OTHER PLACED CONCRETE, ETC...).

I. ALL PAVEMENT MARKINGS WITHIN RIGHT-OF-WAY SHALL BE MADE WITH PERMANENT THERMOPLASTIC AND SHALL CONFORM TO F.D.O.T. STANDARD INDEX NO. 17346, SHEETS 1-7. PARKING STALL STRIPING TO BE 4" WIDE PAINTED STRIPES. ON-SITE STRIPING COLORS AS SHOWN ON THESE PLANS.

J. CONTRACTOR IS TO PROVIDE EROSION CONTROL AND SEDIMENT BARRIERS, (HAY BALES AND/OR SILTATION CURTAIN), TO PREVENT SILTATION OF ADJACENT PROPERTIES, STREETS, STORM SEWERS AND WATERWAYS. IN ADDITION, CONTRACTOR SHALL PLACE STRAW, MULCH, OR OTHER SUITABLE MATERIAL ON GROUND IN AREAS WHERE CONSTRUCTION RELATED TRAFFIC IS TO ENTER AND EXIT THE SITE. IF, IN THE OPINION OF THE ENGINEER AND/OR LOCAL AUTHORITIES, EXCESSIVE QUANTITIES OF EARTH ARE TRANSPORTED OFF-SITE EITHER BY NATURAL DRAINAGE OR BY VEHICULAR TRAFFIC, THE CONTRACTOR IS TO REMOVE SAID EARTH TO THE SATISFACTION OF THE ENGINEER AND/OR AUTHORITIES.

K. IF WIND EROSION BECOMES SIGNIFICANT DURING CONSTRUCTION, THE CONTRACTOR SHALL STABILIZE THE AFFECTED AREAS USING SPRINKLING, IRRIGATION OR OTHER ACCEPTABLE METHODS.

L. THE CONTRACTOR WILL STABILIZE BY SEED AND MULCH, SOD OR OTHER APPROVED MATERIALS ANY DISTURBED AREAS WITHIN ONE WEEK FOLLOWING CONSTRUCTION OF THE UTILITY SYSTEMS AND PAVEMENT AREAS. THE CONTRACTOR SHALL MAINTAIN SUCH AREAS UNTIL FINAL ACCEPTANCE BY OWNER.

M. THE CONTRACTOR IS RESPONSIBLE FOR COORDINATING APPLICABLE SOILS TESTING. TESTS WILL BE REQUIRED PURSUANT WITH THE TESTING SCHEDULE LOCATED ON TABLE SC-1 ON THIS SHEET. UPON COMPLETION OF THE WORK, THE SOILS ENGINEER WILL SUBMIT CERTIFICATIONS TO THE OWNER'S ENGINEER STATING THAT ALL REQUIREMENTS HAVE BEEN MET.

N. A QUALIFIED TESTING LABORATORY SELECTED BY THE OWNER SHALL PERFORM ALL TESTING NECESSARY TO ASSURE COMPLIANCE OF THE IN PLACE MATERIALS AS REQUIRED BY THESE PLANS AND THE VARIOUS AGENCIES. SHOULD ANY RETESTING BE REQUIRED DUE TO THE FAILURE OF ANY TESTS TO MEET THE REQUIREMENTS, THE CONTRACTOR WILL BEAR ALL COSTS OF SAID RETESTING. THE CONTRACTOR SHALL BE RESPONSIBLE FOR SCHEDULING ALL TESTING.

O. MIXING IN PLACE OF SOIL CEMENT WILL NOT BE ALLOWED.

VI. DRAINAGE

A. STANDARD INDEXES REFER TO THE LATEST EDITION OF F.D.O.T. "ROADWAY AND TRAFFIC DESIGN STANDARDS".

B. ALL STORM SEWER PIPE SHALL BE REINFORCED CONCRETE CLASS III, (ASTM C-76) UNLESS OTHERWISE NOTED ON PLANS. ALL DRAINAGE STRUCTURES SHALL BE IN ACCORDANCE WITH F.D.O.T. ROADWAY AND TRAFFIC DESIGN STANDARDS UNLESS OTHERWISE NOTED ON PLANS.

C. PIPE LENGTHS SHOWN ARE APPROXIMATE AND TO THE CENTER OF DRAINAGE STRUCTURES WITH THE EXCEPTION OF MITERED AND FLARED END SECTIONS WHICH ARE NOT INCLUDED IN LENGTHS, THE CONTRACTOR SHALL VERIFY ALL QUANTITIES SUBMITTED FOR BID.

D. ALL DRAINAGE STRUCTURE GRATES AND COVERS SHALL BE TRAFFIC RATED FOR H-20 LOADINGS.

E. ALL STORM DRAINAGE PIPING SHALL BE SUBJECT TO A VISUAL INSPECTION BY THE OWNER'S ENGINEER PRIOR TO THE PLACEMENT OF BACKFILL. THE CONTRACTOR SHALL NOTIFY THE ENGINEER AND THE CITY OF TAMPA 48 HOURS IN ADVANCE TO SCHEDULE INSPECTIONS.

F. THE CONTRACTOR SHALL MAINTAIN AND PROTECT THE STORM DRAINAGE SYSTEM FROM MUD, DIRT, DEBRIS, ETC., UNTIL FINAL ACCEPTANCE OF THE PROJECT. THE CONTRACTOR MAY BE REQUIRED TO RECLEAN PIPES AND INLETS FOR THESE PURPOSES.

VII. SANITARY SEWER

A. SANITARY SEWERS, FORCE MAINS, AND STORM SEWERS SHOULD ALWAYS CROSS UNDER WATER MAINS. SANITARY SEWERS, FORCE MAINS, AND STORM SEWERS CROSSING WATER MAINS SHALL BE LAID TO PROVIDE A MINIMUM VERTICAL DISTANCE OF 18 INCHES BETWEEN THE INVERT OF THE UPPER PIPE AND THE CROWN OF THE LOWER PIPE WHENEVER POSSIBLE.

WHERE SANITARY SEWERS, FORCE MAINS, AND STORM SEWERS MUST CROSS A WATER MAIN WITH LESS THAN 18 INCHES VERTICAL DISTANCE, BOTH THE SEWER AND WATER MAIN SHALL BE CONSTRUCTED OF DUCTILE IRON PIPE (DIP) AT THE CROSSING. (DIP IS NOT REQUIRED FOR STORM SEWERS IF IT IS NOT AVAILABLE IN THE SIZE PROPOSED). SUFFICIENT LENGTHS OF DIP MUST BE USED TO PROVIDE A MINIMUM SEPARATION OF 10 FEET BETWEEN ANY TWO JOINTS. ALL JOINTS ON THE WATER MAIN WITHIN 20 FEET OF THE CROSSING MUST BE LEAK FREE AND MECHANICALLY RESTRAINED.

ALL CROSSINGS SHALL BE ARRANGED SO THAT THE SEWER PIPE JOINTS AND THE WATER MAIN PIPE JOINTS ARE EQUIDISTANT FROM THE POINT OF CROSSING (PIPES CENTERED ON THE CROSSING).

WHERE A NEW PIPE CONFLICTS WITH AN EXISTING PIPE, THE NEW PIPE SHALL BE CONSTRUCTED OF DIP AND THE CROSSING SHALL BE ARRANGED TO MEET THE REQUIREMENTS ABOVE.

B. A MINIMUM 10 FOOT HORIZONTAL SEPARATION SHALL BE MAINTAINED BETWEEN ANY TYPE OF SEWER AND WATER MAIN IN PARALLEL INSTALLATIONS WHENEVER POSSIBLE.

IN CASES WHERE IT IS NOT POSSIBLE TO MAINTAIN A 10 FOOT HORIZONTAL SEPARATION, THE WATER MAIN MUST BE LAID IN A SEPARATE TRENCH OR ON AN UNDISTURBED EARTH SHELF LOCATED ON ONE SIDE OF THE SEWER OR FORCE MAIN AT SUCH AN ELEVATION THAT THE BOTTOM OF THE WATER MAIN IS AT LEAST 18 INCHES ABOVE THE TOP OF THE SEWER.

WHERE IT IS NOT POSSIBLE TO MAINTAIN A VERTICAL DISTANCE OF 18 INCHES IN PARALLEL INSTALLATIONS, THE WATER MAIN SHALL BE CONSTRUCTED OF DIP AND THE SEWER OR FORCE MAIN SHALL BE CONSTRUCTED OF DIP (IF AVAILABLE IN THE SIZE PROPOSED) WITH A MINIMUM VERTICAL DISTANCE OF 6 INCHES. THE WATER MAIN SHOULD ALWAYS BE ABOVE THE SEWER. JOINTS ON THE WATER MAIN SHALL BE LOCATED AS FAR APART AS POSSIBLE FROM THE JOINTS ON THE SEWER OR FORCE MAIN (STAGGERED JOINTS).

C. ALL SANITARY SEWER MAINS, LATERALS, AND FORCE MAINS SHALL HAVE A MINIMUM OF 36 INCHES OF COVER.

D. ALL ON SITE PVC GRAVITY SANITARY SEWER PIPE SHALL BE MADE OF MATERIAL HAVING A CELL CLASSIFICATION OF 12454 B, 12454 C, OR 13354 B AS DEFINED IN ASTM-1784 AND CONFORM TO THE REQUIREMENTS OF SDR 26. ELASTOMERIC GASKET JOINTS SHALL BE UTILIZED.

E. ALL ON SITE DUCTILE IRON PIPE SHALL BE CLASS 52 AND SHALL RECEIVE INTERIOR AND EXTERIOR BITUMINOUS COATING IN ACCORDANCE WITH ANSI A 21.6, A 21.8, OR A 21.51.

F. POINTS OF CONNECTION FOR THE SANITARY SEWER LINES ARE TO BE COORDINATED WITH THE BUILDING PLUMBING PLANS. SANITARY SEWER CONNECTION LOCATIONS SHOWN ON THESE PLANS ARE APPROXIMATE.

G. ALL SANITARY SEWER WORK SHALL CONFORM WITH APPLICABLE STANDARDS AND SPECIFICATIONS FOR THE CITY OF TAMPA.

H. PRIOR TO COMMENCING WORK WHICH REQUIRES CONNECTING NEW SANITARY SEWER LINES TO EXISTING LINES OR APPURTENANCES, THE CONTRACTOR SHALL VERIFY LOCATION AND ELEVATION OF ALL EXISTING UTILITIES NEAR THE POINT OF CONNECTION AND NOTIFY THE OWNER'S ENGINEER OF ANY CONFLICTS OR DISCREPANCIES WITH DESIGN INFORMATION SHOWN IN THESE PLANS. THE CONTRACTOR SHALL NOTIFY THE ENGINEER AND THE CITY OF TAMPA AT LEAST 48 HOURS IN ADVANCE OF SCHEDULED WORK.

I. ALL GRAVITY SEWER PIPING SHALL BE SUBJECT TO A VIDEO AND VISUAL INSPECTION BY THE OWNER'S ENGINEER AND THE CITY OF TAMPA PRIOR TO PLACEMENT OF BASE AND PAVING AND AGAIN PRIOR TO OBTAINING CERTIFICATE OF OCCUPANCY. THE CONTRACTOR SHALL NOTIFY THE ENGINEER 48 HOURS IN ADVANCE TO SCHEDULE INSPECTIONS.

J. THE CONTRACTOR SHALL PERFORM AT HIS OWN EXPENSE AN INFILTRATION OR EXFILTRATION TEST, A TELEVISION INSPECTION, AND A MANDREL (GO, NO GO) TEST ON ALL GRAVITY SEWERS IN ACCORDANCE WITH THE ENGINEER'S REQUIREMENTS AND THE REGULATORY AGENCY HAVING JURISDICTION. SAID TESTS ARE TO BE CERTIFIED BY THE ENGINEER OF RECORD AND SUBMITTED TO THE REGULATORY AGENCY FOR APPROVAL. COORDINATION OF TESTING AND NOTIFICATION OF ALL PARTIES IS THE CONTRACTOR'S RESPONSIBILITY.

VIII. WATER DISTRIBUTION

A. SANITARY SEWERS, FORCE MAINS, AND STORM SEWERS SHOULD ALWAYS CROSS UNDER WATER MAINS. SANITARY SEWERS, FORCE MAINS, AND STORM SEWERS CROSSING WATER MAINS SHALL BE LAID TO PROVIDE A MINIMUM VERTICAL DISTANCE OF 18 INCHES BETWEEN THE INVERT OF THE UPPER PIPE AND THE CROWN OF THE LOWER PIPE WHENEVER POSSIBLE.

WHERE SANITARY SEWERS, FORCE MAINS, AND STORM SEWERS MUST CROSS A WATER MAIN WITH LESS THAN 18 INCHES VERTICAL DISTANCE, BOTH THE SEWER AND WATER MAIN SHALL BE CONSTRUCTED OF DUCTILE IRON PIPE (DIP) AT THE CROSSING. (DIP IS NOT REQUIRED FOR STORM SEWERS IF IT IS NOT AVAILABLE IN THE SIZE PROPOSED). SUFFICIENT LENGTHS OF DIP MUST BE USED TO PROVIDE A MINIMUM SEPARATION OF 10 FEET BETWEEN ANY TWO JOINTS. ALL JOINTS ON THE WATER MAIN WITHIN 20 FEET OF THE CROSSING MUST BE LEAK FREE AND MECHANICALLY RESTRAINED.

ALL CROSSINGS SHALL BE ARRANGED SO THAT THE SEWER PIPE JOINTS AND THE WATER MAIN PIPE JOINTS ARE EQUIDISTANT FROM THE POINT OF CROSSING (PIPES CENTERED ON THE CROSSING).

WHERE A NEW PIPE CONFLICTS WITH AN EXISTING PIPE, THE NEW PIPE SHALL BE CONSTRUCTED OF DIP AND THE CROSSING SHALL BE ARRANGED TO MEET THE REQUIREMENTS ABOVE.

B. A MINIMUM 10 FOOT HORIZONTAL SEPARATION SHALL BE MAINTAINED BETWEEN ANY TYPE OF SEWER AND WATER MAIN IN PARALLEL INSTALLATIONS WHENEVER POSSIBLE.

IN CASES WHERE IT IS NOT POSSIBLE TO MAINTAIN A 10 FOOT HORIZONTAL SEPARATION, THE WATER MAIN MUST BE LAID IN A SEPARATE TRENCH OR ON AN UNDISTURBED EARTH SHELF LOCATED ON ONE SIDE OF THE SEWER OR FORCE MAIN AT SUCH AN ELEVATION THAT THE BOTTOM OF THE WATER MAIN IS AT LEAST 18 INCHES ABOVE THE TOP OF THE SEWER.

WHERE IT IS NOT POSSIBLE TO MAINTAIN A VERTICAL DISTANCE OF 18 INCHES IN PARALLEL INSTALLATIONS, THE WATER MAIN SHALL BE CONSTRUCTED OF DIP AND THE SEWER OR FORCE MAIN SHALL BE CONSTRUCTED OF DIP (IF AVAILABLE IN THE SIZE PROPOSED) WITH A MINIMUM VERTICAL DISTANCE OF 6 INCHES. THE WATER MAIN SHOULD ALWAYS BE ABOVE THE SEWER. JOINTS ON THE WATER MAIN SHALL BE LOCATED AS FAR APART AS POSSIBLE FROM THE JOINTS ON THE SEWER OR FORCE MAIN (STAGGERED JOINTS).

C. ALL WATER MAINS SHALL HAVE A MINIMUM OF 36 INCHES OF COVER.

D. ALL WATER SYSTEM WORK SHALL CONFORM WITH CITY OF TAMPA WATER DEPARTMENT STANDARDS.

E. CONFLICTS BETWEEN WATER AND STORM OR SANITARY SEWER ARE TO BE RESOLVED BY ADJUSTING THE WATER LINES AS NECESSARY.

F. ALL ON SITE PVC WATER MAINS 4 INCHES THROUGH 12 INCHES SHALL BE IN ACCORDANCE WITH AWWA C-900 AND SHALL BE CLASS 200 DR 14. ALL ON SITE PVC WATER MAINS 2 INCHES TO 3 INCHES SHALL BE CLASS 200 AND MEET REQUIREMENTS OF SDR 21 IN ACCORDANCE WITH ASTM D-2241.

G. ALL DUCTILE IRON PIPE SHALL CONFORM TO THE REQUIREMENTS OF ANSI STANDARD A21.51, MINIMUM CLASS 50. JOINTS FOR DUCTILE IRON PIPE SHALL BE MECHANICAL OR PUSH-ON JOINTS. PIPE SHALL HAVE AN EXTERIOR BITUMINOUS COATING IN ACCORDANCE WITH ANSI A21.51. PIPE INTERIOR SHALL HAVE A CEMENT MORTAR LINING WITH AN ASPHALTIC SEAL COAT CONFORMING TO AWWA /ANSI C104/A21.4. THE WEIGHT AND CLASS DESIGNATION SHALL BE PAINTED IN WHITE ON THE EXTERIOR SURFACE OF ALL PIPES AND FITTINGS. MANUFACTURER'S CODE OR SERIAL NUMBER SHALL BE PROVIDED ON THE BELL OF EACH PIPE JOINT.

H. ALL DUCTILE FITTINGS SHALL BE MECHANICAL JOINT WITH A MINIMUM PRESSURE RATING OF 250 PSI AND SHALL CONFORM TO THE REQUIREMENTS OF ANSI/AWWA A21.10/C110. ALL FITTINGS SHALL BE COATED AND LINED AS SPECIFIED ABOVE FOR DUCTILE IRON PIPE.

I. THE CONTRACTOR IS TO INSTALL TEMPORARY BLOWOFFS AT THE END OF WATER SERVICE LATERALS TO BUILDINGS TO ASSURE ADEQUATE FLUSHING AND DISINFECTION.

J. THRUST BLOCKING SHALL BE PROVIDED AT ALL FITTINGS AND HYDRANTS AS SHOWN ON DETAILS. ALL JOINTS SHALL BE RESTRAINT JOINT FITTINGS.

K. POINTS OF CONNECTION OF THE EXTERNAL WATER LINES ARE TO COINCIDE WITH THE BUILDING PLUMBING AS SHOWN ON THE BUILDING PLUMBING PLANS. CONNECTION LOCATIONS SHOWN ARE APPROXIMATE.

L. FIRE LINES TO BUILDINGS WITH FIRE SPRINKLER SYSTEMS SHALL BE INSTALLED BY A CONTRACTOR DULY LICENSED BY THE STATE FIRE MARSHAL'S OFFICE. THE CONTRACTOR SHALL VERIFY REQUIREMENTS PRIOR TO CONSTRUCTION.

M. ALL COMPONENTS OF THE WATER SYSTEM, INCLUDING FITTINGS, HYDRANTS, CONNECTIONS, AND VALVES SHALL REMAIN UNCOVERED UNTIL PROPERLY INSPECTED AND ACCEPTED BY THE OWNER'S ENGINEER AND THE CITY OF TAMPA UTILITY DEPARTMENT SPECIFICATIONS. THE CONTRACTOR SHALL NOTIFY THE OWNER'S ENGINEER AND THE CITY OF TAMPA INSPECTORS 72 HOURS IN ADVANCE OF PERFORMING TESTS.

N. THE CONTRACTOR SHALL CONTRACT WITH A QUALIFIED LABORATORY TO PERFORM CHLORINATION AND BACTERIOLOGICAL SAMPLING. COPIES OF ALL BACTERIOLOGICAL TESTS TO BE SUBMITTED TO THE OWNER'S ENGINEER.

O. WATER MAIN SHALL HAVE SUITABLE MAGNETIC LOCATOR TAPE BURIED OVER THE WATER MAIN.

IX. EROSION/TURBIDITY CONTROL

A. THE INSTALLATION OF TEMPORARY EROSION CONTROL BARRIERS SHALL BE COORDINATED WITH THE CONSTRUCTION OF THE PERMANENT EROSION CONTROL FEATURES TO THE EXTENT NECESSARY TO ASSURE ECONOMICAL, EFFECTIVE AND CONTINUOS CONTROL OF EROSION AND WATER POLLUTION THROUGHOUT THE LIFE OF THE CONSTRUCTION PHASE.

B. THE TYPE OF EROSION CONTROL BARRIERS USED SHALL BE GOVERNED BY THE NATURE OF THE CONSTRUCTION OPERATION AND SOIL TYPE THAT WILL BE EXPOSED. SILTY AND CLAYEY MATERIAL USUALLY REQUIRE SOLID SEDIMENT BARRIERS TO PREVENT TURBID WATER DISCHARGE, WHILE SANDY MATERIAL MAY NEED ONLY SILT SCREENS OR HAY BALES TO PREVENT EROSION. FLOATING TURBIDITY CURTAINS SHALL BE USED IN OPEN WATER SITUATIONS. DIVERSION DITCHES OR SWALES MAY BE REQUIRED TO PREVENT TURBID STORMWATER RUNOFF FROM BEING DISCHARGED INTO WETLAND OR OTHER WATER BODIES. IT MAY BE NECESSARY TO EMPLOY A COMBINATION OF BARRIERS, DITCHES AND OTHER EROSION/TURBIDITY CONTROL MEASURES IF CONDITIONS WARRANT.

C. CONSTRUCTION OPERATIONS IN OR ADJACENT TO WETLANDS SHALL BE RESTRICTED TO THOSE AREAS IDENTIFIED IN THE PLANS AND IN THE SPECIFICATIONS.

D. EXCEPT AS NECESSARY FOR CONSTRUCTION, EXCAVATED MATERIAL SHALL NOT BE DEPOSITED IN THE WETLANDS OR IN A POSITION CLOSE ENOUGH THERETO TO BE WASHED AWAY BY HIGH WATER OR RUNOFF.

E. WHERE PUMPS ARE TO BE USED TO REMOVE TURBID WATERS FROM CONSTRUCTION AREAS, THE WATER SHALL BE TREATED PRIOR TO DISCHARGE TO THE WETLANDS. TREATMENT METHODS INCLUDE AND ARE NOT LIMITED TO, TURBID WATER BEING PUMPED INTO GRASSY SWALES OR APPROPRIATE VEGETATED AREAS, SEDIMENT BASINS, OR CONFINED BY AN APPROPRIATE ENCLOSURE SUCH AS TURBIDITY BARRIERS, AND KEPT CONFINED UNTIL ITS TURBIDITY LEVEL MEETS STATE WATER QUALITY STANDARDS.

F. THE CONTRACTOR SHALL SCHEDULE HIS OPERATIONS SUCH THAT THE AREA OF UNPROTECTED ERODIBLE EARTH EXPOSED AT ANY ONE TIME IS NOT LARGER THAN THE MINIMUM AREA NECESSARY FOR EFFICIENT CONSTRUCTION OPERATIONS, AND THE DURATION OF EXPOSED, UNCOMPLETED CONSTRUCTION TO THE ELEMENTS SHALL BE AS SHORT AS PRACTICAL. CLEARING AND GRUBBING SHALL BE SO SCHEDULED AND PERFORMED THAT GRADING OPERATIONS CAN FOLLOW IMMEDIATELY THEREAFTER, AND GRADING OPERATIONS SHALL BE SCHEDULED AND PERFORMED THAT PERMANENT EROSION CONTROL FEATURES CAN FOLLOW IMMEDIATELY THEREAFTER IF CONDITIONS ON THE PROJECT PERMIT.

G. THE CONTRACTOR AND/OR THE OWNER'S REPRESENTATIVE SHALL PROVIDE ROUTINE MAINTENANCE OF PERMANENT AND TEMPORARY EROSION CONTROL FEATURES UNTIL THE PROJECT IS COMPLETE AND ALL BARED SOILS ARE STABILIZED.

X. DEWATERING

A. DEWATERING OF THE SITE FOR ANY CONSTRUCTION REQUIRING DEWATERING SHALL BE BY WELL POINT. THE WELL POINT SYSTEM MAY NOT DISCHARGE DIRECTLY INTO WETLAND AREAS. ANY OTHER METHOD OF DEWATERING WILL REQUIRE A DESIGNED SETTLING BASIN PRIOR TO DISCHARGE INTO WETLANDS.

CONTRACTOR SHALL PROVIDE A DEWATERING PLAN TO THE SOUTHWEST FLORIDA WATER MANAGEMENT DISTRICT (SWFWMD) SHOULD DEWATERING BE NECESSARY DURING CONSTRUCTION. SEE GRADING PLANS FOR ADDITIONAL NOTES.

SC-1 TESTING SCHEDULE

ITEM	TEST	TEST FREQUENCY
BUILDING PADS	IN ACCORDANCE WITH GEOTECHNICAL REPORT	
EMBANKMENT	OPTIMUM MOISTURE/MAXIMUM DENSITY 95% OF MAXIMUM DENSITY AS DETERMINED BY AASHTO T180-57 (ASTM D1557-70)	PER SOIL TYPE ONE PER 500 FEET HORIZONTALLY, IN 12 INCH LIFTS
UTILITY TRENCH BACKFILL OVER PIPELINES AND AROUND STRUCTURES WITHIN THE RIGHT-OF-WAY AND IN STRUCTURAL AREAS	OPTIMUM MOISTURE/MAXIMUM DENSITY 95% OF MAXIMUM DENSITY AS DETERMINED BY AASHTO T180-57 (ASTM D1557-70)	PER SOIL TYPE *, **
UTILITY TRENCH BACKFILL OVER PIPELINES OUTSIDE THE RIGHT-OF-WAY AND IN NON-STRUCTURAL AREAS	OPTIMUM MOISTURE/MAXIMUM DENSITY 95% OF MAXIMUM DENSITY AS DETERMINED BY AASHTO T180-57 (ASTM D1557-70)	PER SOIL TYPE *, **
STABILIZED SUBGRADE	OPTIMUM MOISTURE/MAXIMUM DENSITY MINIMUM LBR 40 98% OF MAXIMUM DENSITY AS DETERMINED BY AASHTO T180-57 (ASTM D1557-70)	PER MATERIAL TYPE *** PER MATERIAL TYPE ***
BASE (OTHER THAN SOIL CEMENT)	OPTIMUM MOISTURE/MAXIMUM DENSITY MINIMUM LBR 100 98% OF MAXIMUM DENSITY AS DETERMINED BY AASHTO T180-57 (ASTM D1557-70) - NO TOLERANCE GRADATION, ATTERBURG LIMITS	PER SOURCE PER SOURCE *** EACH LIFT PER SOURCE
CONCRETE	SLUMP TEST COMPRESSIVE STRENGTH CYLINDERS AIR CONTENT	ONE PER SET OF CYLINDERS ONE SET OF (3) CYLINDERS FOR 100 CUBIC YARDS OR FRACTION THEREOF ONE PER SET OF CYLINDERS
SOIL CEMENT BASE (NO IN-PLACE MIXING ALLOWED) (TO BE USED IF SEPARATION BETWEEN SHWT & BOTTOM OF BASE IS < 1,5')	MIX DESIGN/PER SPECIFICATIONS AS DETERMINED BY PORTLAND CEMENT ASSOCIATION SPECIFICATIONS MAXIMUM DENSITY AS DETERMINED BY AASHTO T134 OPTIMUM MOISTURE (STANDARD) COMPRESSIVE STRENGTH SPECIMENS AS DETERMINED BY PORTLAND CEMENT ASSOCIATION SPECIFICATIONS - 300 PSI @ 7 DAYS, TYPE DAILY **** TEST CORES AS DETERMINED BY PORTLAND CEMENT ASSOCIATION SPECIFICATIONS - 400 PSI @ 21 DAYS, SET OF COMPRESSIVE **** FIELD DENSITY AND THICKNESS 98% OF MAXIMUM DENSITY AS DETERMINED BY AASHTO T192,T238,ASTM D1556, D2922	ONE PER SOIL TYPE ONE PER SOIL TYPE DAILY ONE SET OF (3) PER SOIL TYPE DAILY ONE SET OF (3) CORES PER TEST STRENGTH SPECIMENS ONE PER 2500 SF HORIZONTAL
ASPHALTIC CONCRETE	AGGREGATE ANALYSIS DESIGN MIX BITUMEN CONTENT GRADATION STABILITY FLOW PROPERTIES OF IN-PLACE MATERIALS (MARSHALL) THICKNESS 95% OF LAB DENSITY	ONE PER DESIGN ONE PER TYPE ONE PER DAY ONE PER DAY ONE PER DAY *** ***

* TESTS SHALL BE LOCATED NO MORE THAN 500 FEET APART. TESTS SHALL BE PERFORMED ON EACH LIFT, EXCEPT THAT TESTS SHALL NOT BE FURTHER APART THAN ONE (1) FOOT VERTICALLY. FIELD DENSITIES SHALL BE TAKEN OVER ALL ROAD CROSSINGS. FIELD DENSITIES FOR SANITARY LINES SHALL BE STAGGERED TO INCLUDE RESULTS OVER SERVICE LATERALS. THERE SHALL BE A MINIMUM OF ONE (1) TEST SERIES FOR EACH 12 INCHES OF LIFT OVER PIPELINE BETWEEN MANHOLES. TESTS AROUND STRUCTURES SHALL BE SPIRALED IN 12 INCH LIFTS.

** FOR FLEXIBLE PIPE, (CORRUGATED STEEL OR ALUMINUM), 95% OF MAXIMUM DENSITY (AASHTO-T99) PER F.D.O.T. SUPPLEMENTAL SPECIFICATIONS SUBARTICLE 125-8.3.2 MODIFIED.

*** TESTS SHALL BE LOCATED NO MORE THAN 500 FEET APART. THERE SHALL BE NO LESS THAN ONE (1) TEST PER STREET.

**** MAXIMUM STRENGTH LIMITS, AS ESTABLISHED BY THE SOILS TESTING COMPANY, SHALL NOT BE EXCEEDED.

REVISIONS NO.	BY	DATE	DESCRIPTION
1	-	-	-
2	-	-	-
3	-	-	-
4	-	-	-
5	-	-	-

DESIGNED BY: AARON SILVERBERG
DRAWN BY: AARON SILVERBERG
CHECKED BY: CHRIS WEDDLE
APPROVED BY: CHRIS WEDDLE
DATE: 11-28-2018
JOB NO.: 18-127

CONSTRUCTION NOTES

NEW TAMPA RECREATION ADDITION

TAMPA, FL 33647

AURORA CIVIL ENGINEERING, INC
610 E. Morgan Street Brandon, FL 33510 (813)643-9907

This item has been electronically signed and sealed by Christopher E. Weddle, PE on 11/28/2018 using a Digital Signature. Printed copies of this document are not considered signed and sealed and the signature must be verified on any electronic copies.

CHRISTOPHER E. WEDDLE, P.E.
FLORIDA P.E. No. 35446
AURORA CIVIL ENGINEERING, INC.
CERTIFICATE OF AUTHORIZATION No. 00008909

C-2

File: R:\Projects\FGA New Tampa Recreation Center\Plans\New Tampa Rec; Plotted: 11/28/2018 9:49 AM by AARON SILVERBERG; Saved: 11/20/2018 1:47 PM by AARON

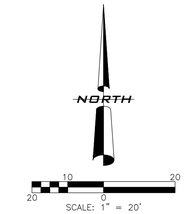

GENERAL GRADING NOTES:

1. PAVEMENT SPOT GRADES SHOWN ARE FINISH PAVEMENT GRADES AT THE FACE OF CURB. TOP OF STANDARD CURBING IN THESE AREAS IS 0.5 FEET ABOVE THE EDGE OF PAVEMENT, UNLESS NOTED OTHERWISE.

2. SPOT GRADES AND CONTOURS SHOWN IN GRASSED AND LANDSCAPED AREAS REPRESENT FINAL PROPOSED GRADES AFTER PLACEMENT OF SODDING AND/OR BEDDING MATERIALS.

3. IN AREAS WHERE THE TOP OF CURB OR SIDEWALK VARY FROM THE TYPICAL SECTIONS, THE TOP OF CURB OR SIDEWALK ARE LABELLED AS "TC" OR "S/W".

4. DISABLED PARKING SPACES AND ADJACENT ACCESS AISLES ARE DESIGNED TO HAVE 2% OR FLATTER CROSS SLOPES IN ALL DIRECTIONS. PROPOSED PAVEMENT GRADES ARE SHOWN AT ALL CORNERS OF DISABLED SPACES AND ADJACENT ACCESS AISLES.

5. SIDEWALK/CURB RAMPS SHALL BE CONSTRUCTED PER FDOT INDEX #304, LATEST EDITION).

6. CONSTRUCT 2 LF CURB HEIGHT TRANSITION FROM FULL 6" HEIGHT TO FLUSH WITH SIDEWALK/ASPHALT PAVEMENT.

VERTICAL DATUM:
ELEVATIONS SHOWN HEREON ARE BASED ON CITY OF TAMPA BENCHMARK HV-02 0401, ELEV=39.212 FEET. (NAVD 1988)

VERTICAL DATUM CONVERSION:
NAVD 88 = (NGVD 1929 - 0.85')
NAVD 88 ELEV. 39.2' (SITE BM ID) = NGVD29 ELEV. 40.05'

REVISIONS				
NO.	BY	DATE	DESCRIPTION	
1	-	-	-	
2	-	-	-	
3	-	-	-	
4	-	-	-	
5	-	-	-	

DESIGNED BY: AARON SILVERBERG
DRAWN BY: AARON SILVERBERG
DATE: 11-28-2018
CHECKED BY: CHRIS WEDDLE
APPROVED BY: CHRIS WEDDLE
JOB NO.: 18-127

GRADING PLAN

NEW TAMPA RECREATION ADDITION

TAMPA, FL 33647

AURORA CIVIL ENGINEERING INC
610 E. Morgan Street Brandon, FL 33510 (813)643-9907

This item has been electronically signed and sealed by Christopher M. Weddle, P.E. on 11/28/2018 using a Digital Signature.

Printed copies of this document are not considered signed and sealed and the signature must be verified on any electronic copies.

CHRISTOPHER M. WEDDLE, P.E.
FLORIDA P.E. No. 33544
AURORA CIVIL ENGINEERING, INC.
CERTIFICATE OF AUTHORIZATION No. 00008909

C-3

File: R:\Projects\FGA New Tampa Recreation Center\Plans\New Tampa Rec Plotted: 11/28/2018 9:50 AM by AARON SILVERBERG Saved: 11/20/2018 1:47 PM by AARON

SANITARY STRUCTURES

S-1
MANHOLE
RIM EL 44.00 +/-
INV EL 38.55 (8") SW
INV EL 38.55 (8") S

S-2
MANHOLE
RIM EL 41.35
INV EL 38.95 (8") N
INV EL 39.05 (8") S

S-3
MANHOLE
RIM EL 42.10
INV EL 39.51 (8") N
INV EL 39.61 (8") S

S-4
MANHOLE
RIM EL 42.50
INV EL 40.01 (8") NE
INV EL 40.11 (6") NW

STORM STRUCTURES

ST-1
EXISTING CLEAN OUT
CAP EL 44.10
INV EL 40.33
REPLACE W/ ADS DRAIN BASIN
12" SOLID COVER
COVER EL 44.10
INV EL 40.33 (8") NW
INV EL 39.50 (12") SE

ST-2
15" ADS DRAIN BASIN
12" SOLID SOVER
COVER EL 41.75
INV EL 39.50 (8") E
INV EL 38.80 (12") NW
INV EL 38.50 (12") SW

GENERAL NOTES:

1. DIMENSIONS AND RADII IN PAVEMENT AREAS WITHOUT CURBING ARE SHOWN TO THE EDGE OF PAVEMENT. DIMENSIONS AND RADII IN PAVEMENT AREAS WITH CURBING ARE SHOWN TO THE FACE OF CURB. FACE OF CURB OR EDGE OF PAVEMENT RADII ARE 3' UNLESS NOTED OTHERWISE.
2. STORMWATER POND DIMENSIONS ARE SHOWN TO THE INSIDE TOP OF BANK.
3. STORMWATER STRUCTURE AND PIPE DIMENSIONS ARE CALCULATED AND SHOWN TO THE C/L OF STRUCTURES. MITERED END SECTION LOCATIONS ARE APPROXIMATE. THE CONTRACTOR SHALL FIELD ADJUST PIPE LENGTHS IF NEEDED TO ENSURE THE MITERED ENDS FIT THE SIDE SLOPES. PIPE LENGTHS SHOWN DO NOT INCLUDE THE LENGTH OF THE MITERED END SECTION.
4. ALL DISTURBED AREAS WITHIN ANY RIGHT-OF-WAY SHALL BE RESTORED TO EXISTING CONDITIONS PRIOR TO CONSTRUCTION.
5. ANY MATERIALS REMOVED FROM THE SITE DURING CONSTRUCTION SHALL BE PROPERLY DISPOSED OF OFF-SITE OR AS DIRECTED BY THE OWNER.
6. BUILDING DIMENSIONS AND TIES SHOWN ARE TO THE FACE OF BUILDING BASED ON THE INFORMATION PROVIDED BY THE ARCHITECT. COORDINATE AND VERIFY ALL BUILDING DIMENSIONS WITH THE ARCHITECTURAL PLANS.
7. DUMPSTER ENCLOSURES SHALL BE 6' HIGH AND CONSTRUCTED OF THE SAME MATERIAL AS BUILDING FRONTS WITH SOLID GATES THAT CAN BE LOCKED OPEN.
8. ALL SIGNS AND PAVEMENT MARKING TO CONFORM TO MUTCD LATEST EDITION.
9. ALL STRIPING AND PAVEMENT MARKING TO BE PAINT.
10. SIDEWALK CURB RAMPS TO BE IN ACCORDANCE WITH CR21 FDOT INDEX 304 WITH RED TRUNCATED DOMES (TYPICAL).
11. CONTRACTOR TO CONFIRM INVERT ELEVATION, PIPE MATERIAL AND CONDITION PRIOR TO MAKING CONNECTIONS FOR STORM CONNECTIONS. ADVISE ENGINEER OF CONFLICTS OR DEFICIENCIES.
12. CONTRACTOR SHALL BE AWARE THAT EXISTING UTILITIES, IRRIGATION LINES, ETC. MAY EXIST IN THE AREA OF NEW CONSTRUCTION. CONTRACTOR TO LOCATE EXISTING UTILITIES, IRRIGATION LINES, ETC. AND RELOCATE OR DEFLECT AS NECESSARY TO FACILITATE THE WORK.
13. ALL STORM AND SANITARY PIPE TO BE TYPE SDR26 PVC.

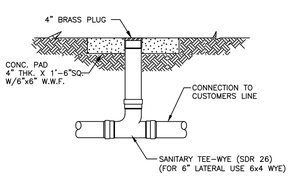

TYPICAL ON-SITE CLEAN-OUT DETAIL

VERTICAL DATUM:
ELEVATIONS SHOWN HEREON ARE BASED ON CITY OF TAMPA BENCHMARK HV-02 0401, ELEV=39.212 FEET. (NAVD 1988)

VERTICAL DATUM CONVERSION:
NAVD 88 = (NGVD 1929 - 0.85')
NAVD 88 ELEV. 39.2' (SITE BM ID) = NGVD29 ELEV. 40.05'

REVISIONS				
5				
4				
3				
2				
1				
NO.	BY	DATE	DESCRIPTION	

DRAWN BY: AARON SILVERBERG DATE: 11-28-2018
CHECKED BY: CHRIS WEDDLE APPROVED BY: CHRIS WEDDLE JOB NO.: 18-127

UTILITY PLAN

NEW TAMPA RECREATION ADDITION

TAMPA, FL 33647

AURORA CIVIL ENGINEERING, INC
610 E. Morgan Street Brandon, FL 33510 (813)643-9807

This item has been electronically signed and sealed by Christopher L. Weddle, P.E. on the date adjacent to the seal using a Digital Signature. Printed copies of this document are not considered signed and sealed and the signature must be verified on any electronic copies.

STATE OF FLORIDA LICENSE No. 56446 CHRISTOPHER L. WEDDLE, P.E. FLORIDA P.E. No. 56446 AURORA CIVIL ENGINEERING, INC. CERTIFICATE OF AUTHORIZATION No. 00006909

C-4

File: R:\Projects\FCA New Tampa Recreation Center\Plans\New Tampa Rec. Plot.dwg Plotted: 11/28/2018 9:51 AM by AARON SILVERBERG Saved: 11/20/2018 1:47 PM by AARON

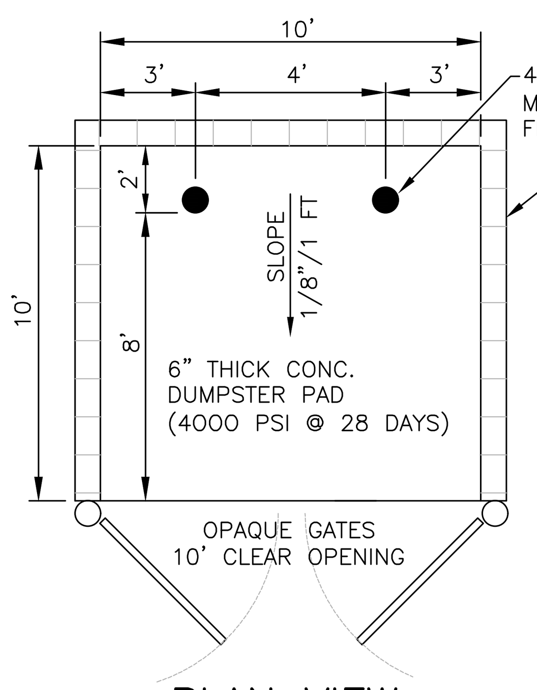

PLAN VIEW

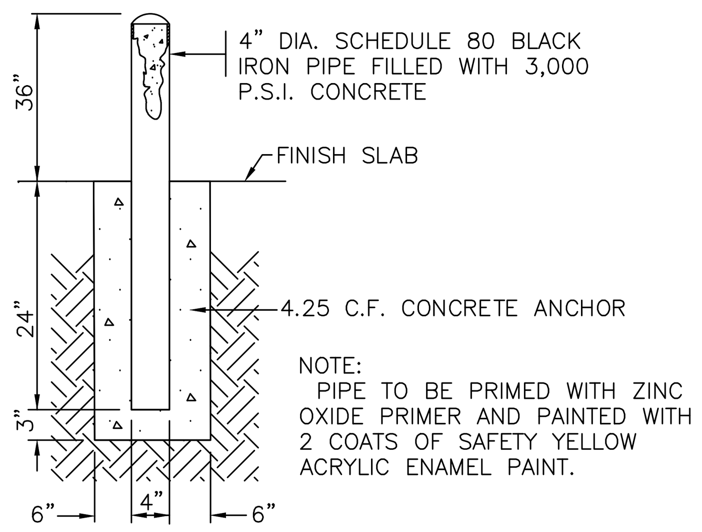

BOLLARD DETAIL

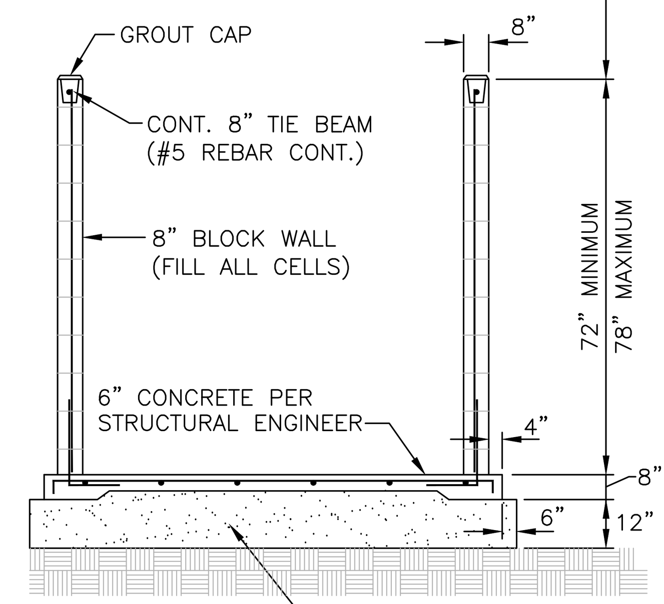

SECTION

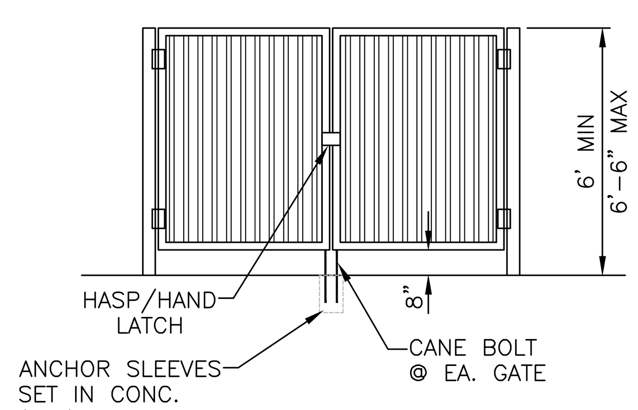

GATE ELEVATION

DUMPSTER ENCLOSURE DETAILS

NOTES:
1. ALL MATERIALS USED FOR DUMPSTER ENCLOSURES SHALL BE APPROVED BY THE CITY OF TAMPA.

2. THE SITE SHALL COMPLY WITH CHAPTER 26 – SOLID WASTE.

3. THE DUMPSTER ENCLOSURE SHALL BE A MINIMUM OF 6' IN HEIGHT AND CONSTRUCTED WITH MATERIALS COMPATIBLE WITH THE WALLS OF THE MAIN BUILDING. THE MINIMUM INTERIOR DIMENSIONS SHALL BE 10'x10' WITH A MINIMUM 10' WIDE OPENING CLEAR FROM ANY OBSTRUCTIONS, INCLUDING GATE HARDWARE.

4. GATES SHALL BE CONSTRUCTED OF SOLID/OPAQUE MATERIALS, AND HAVE LOCKING PINS TO HOLD OPEN DURING SERVICE.

5. CONCRETE SLAB AND WALL REINFORCEMENT TO BE DESIGNED BY A STRUCTURAL ENGINEER. SEE ARCHITECTURAL PLANS.

6. ANY EXISTING OVERHEAD LINES SHALL BE RAISED, IF REQUIRED, TO PROVIDE A MINIMUM OF 21' VERTICAL CLEARANCE ABOVE THE DUMPSTER AND SERVICE VEHICLE.

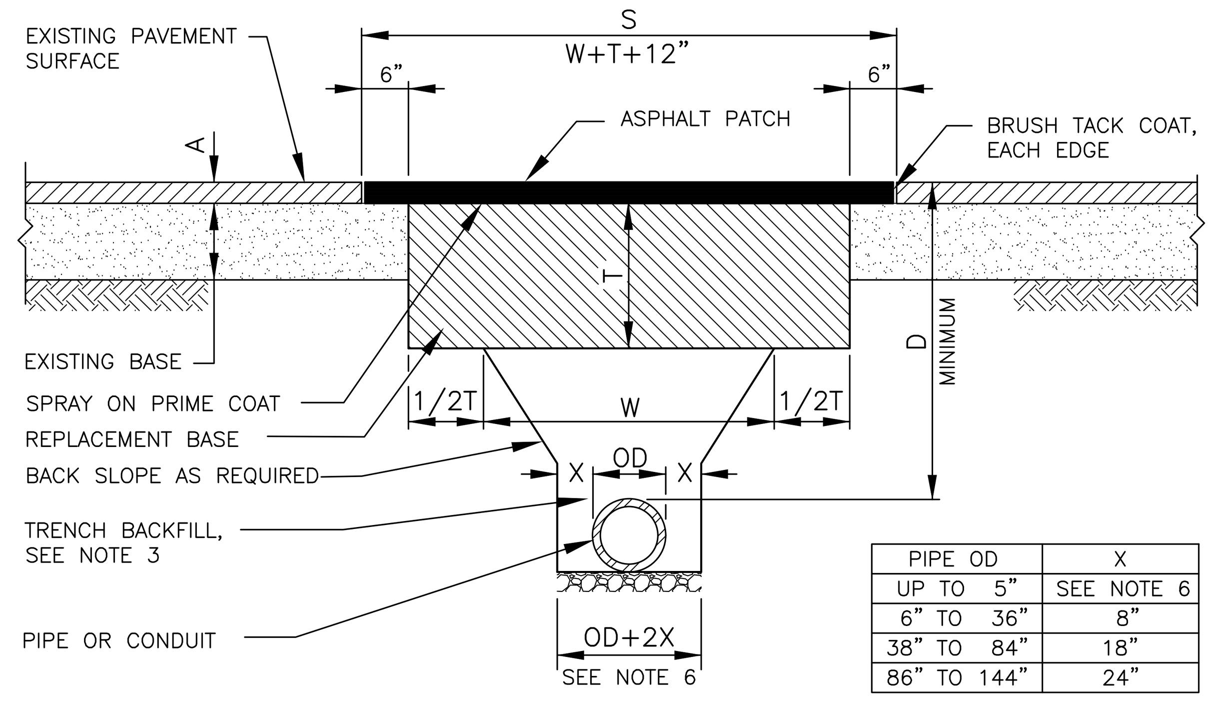

PIPE OD	X
UP TO 5"	SEE NOTE 6
6" TO 36"	8"
38" TO 84"	18"
86" TO 144"	24"

S C H E D U L E

	ITEM	ALLEY/DRIVE	STD. ROAD	HEAVY DUTY ROAD	REMARKS
A	ASPH. THICKNESS MINIMUM	1"	1"	2-1/4"	
T	BASE THICKNESS MINIMUM	9"	12"	16"	MAY BE SUBSTITUTED WITH ASPHALT
S	SURFACE REPL. MINIMUM	24"	36"	36"	
D	DEPTH (COVER) MINIMUM	30"	30"	36"	

NOTES:
1. FOR USE WHERE PERMISSION HAS BEEN GRANTED FOR "OPEN CUT" INSTALLATION.
2. ALL PAVING PREPARATION SHALL MEET CITY SPECIFICATIONS.
3. REPLACEMENT BASE AND TRENCH BACKFILL SHALL BE PLACED IN 6" LIFTS, EACH LIFT COMPACTED TO 98% AS PER SPECIFICATIONS.
4. PAVEMENT JOINTS SHALL BE MECHANICALLY SAW CUT.
5. BASE MATERIAL SHALL BE LIMEROCK, SHELL, OR CRUSHED (RECLAIMED) CONCRETE TO MATCH BASE MATERIAL, BUT OF THICKNESS SHOWN HERE.
6. FOR PIPES/CONDUITS LESS THAN 5" OD, DITCH WIDTH MAY BE REDUCED TO WIDTH OF THE MECHANICAL TAMPER IF BACKFILLED WITH DRY 15:1 SAND/CEMENT MIX, OR OTHER APPROVED MATERIAL, TO 4" ABOVE PIPE.

FLEXIBLE PAVEMENT RESTORATION DETAIL

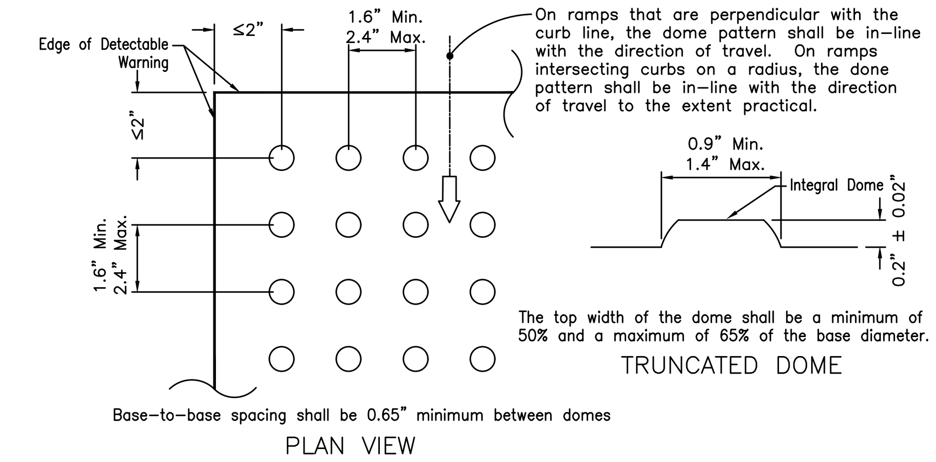

All sidewalk curb ramps shall have detectable warning surfaces that extend the full width of the ramp and in the direction of travel 24 inches (610 mm) from the back of curb.

CURB RAMP DETECTABLE WARNING DETAIL

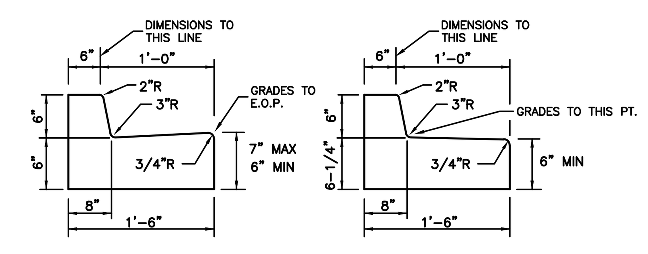

MODIFIED TYPE 'F' CURB
N.T.S.

NOTE: ALL ON-SITE PAVEMENT TO HAVE ADJACENT CURBING UNLESS NOTED OTHERWISE. ALTERNATE CURBING MAY BE USED AT THE OWNERS DISCRETION. DIMENSIONS AND RADII ON THE PLANS ARE TO THE CURB FACE AS SHOWN ABOVE.

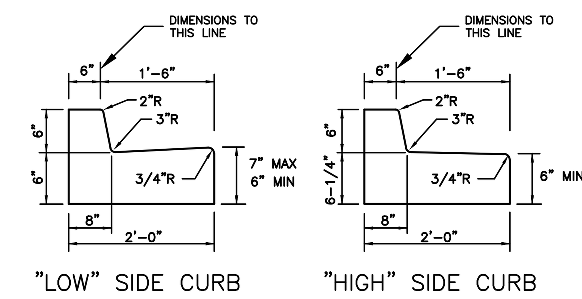

TYPE 'F' CURB
N.T.S.

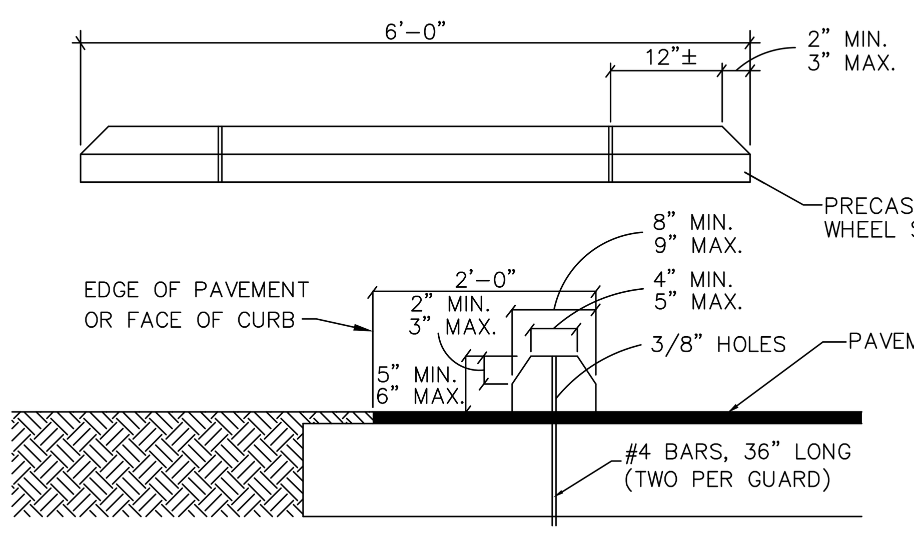

NOTE: WHEEL STOPS TO BE PROVIDED WHERE SHOWN ON THE PLANS.

CONCRETE WHEEL STOP DETAIL
N.T.S

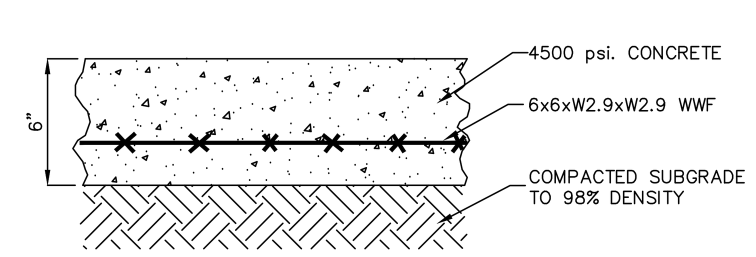

TYPICAL 6" CONCRETE PAVEMENT

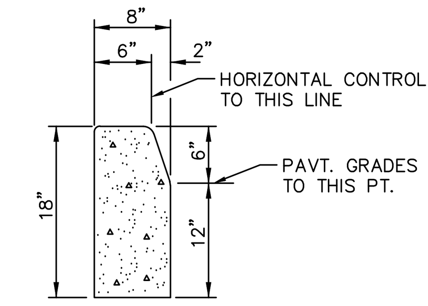

TYPE "D" CURB
F.D.O.T. INDEX #300

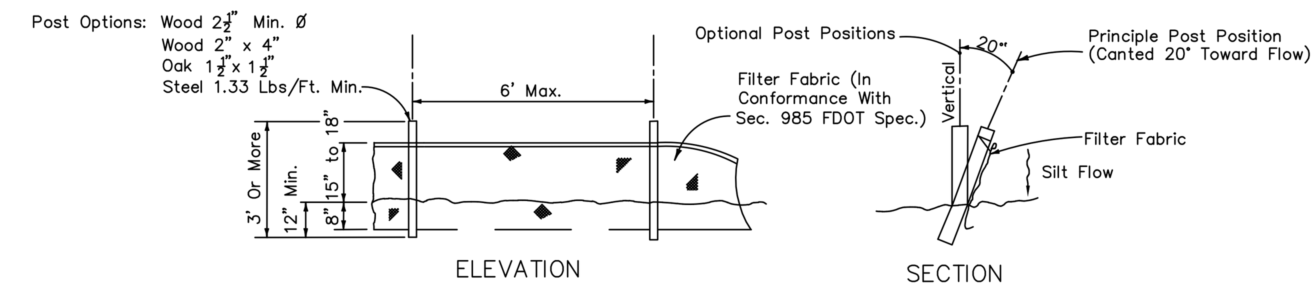

TYPE III SILT FENCE
FDOT INDEX No. 102

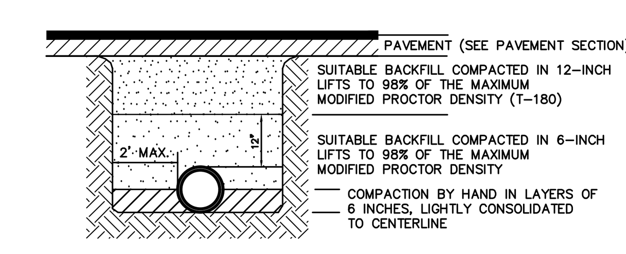

NOTES:
1. TYPE 2 TRENCH IS DEFINED AS A FLAT-BOTTOM TRENCH. BACKFILL LIGHTLY CONSOLIDATED TO CENTERLINE OF PIPE.
2. THIS STANDARD SHALL BE UTILIZED IN THE ABSENCE OF SPECIFIC STANDARDS.
3. SUITABLE BACKFILL SHALL BE DEFINED AS MATERIAL FREE FROM CINDERS, ASHES, REFUSE, ORGANIC MATTER, BOULDERS, ROCKS OR STONES, OR OTHER MATERIAL THAT IN THE OPINION OF THE ENGINEER IS UNSUITABLE.

TYPICAL TRENCHING, BEDDING AND BACKFILL DETAIL FOR PAVED AREAS
N.T.S.

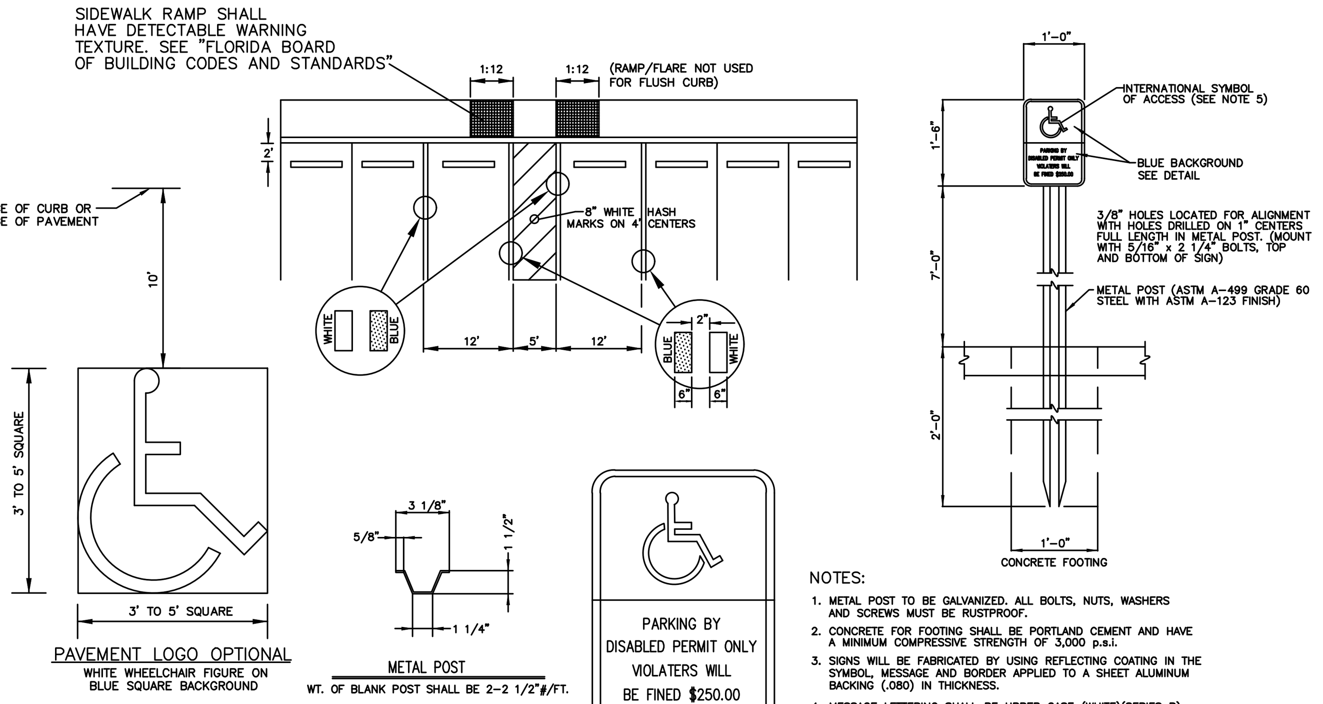

NOTES:
1. METAL POST TO BE GALVANIZED. ALL BOLTS, NUTS, WASHERS AND SCREWS MUST BE RUSTPROOF.
2. CONCRETE FOR FOOTING SHALL BE PORTLAND CEMENT AND HAVE A MINIMUM COMPRESSIVE STRENGTH OF 3,000 p.s.i.
3. SIGNS WILL BE FABRICATED BY USING REFLECTING COATING IN THE SYMBOL, MESSAGE AND BORDER APPLIED TO A SHEET ALUMINUM BACKING (.080) IN THICKNESS.
4. MESSAGE LETTERING SHALL BE UPPER CASE (WHITE)(SERIES B) 2" HIGH IN ACCORDANCE WITH MANUAL ON UNIFORM TRAFFIC CONTROL DEVICES.
5. THE SYMBOL IS COMPOSED OF TWO ELEMENTS, A WHITE WHEELCHAIR FIGURE (WHICH SHOULD ALWAYS FACE RIGHT) ON A SQUARE BACKGROUND, INTERNATIONAL BLUE IN COLOR (FED. STD. 595a, COLOR #15180).
6. SIGN POST SHALL BE MIN. 2'-0" CLEAR FROM BACK OF CURB.
7. HANDICAP PARKING SIGNING AND AND MARKING SHALL BE PROVIDED FOR IN ACCORDANCE WITH FLORIDA BUILDING CODE CHAPTER 11.

ACCESSIBLE PARKING DETAIL
N.T.S.

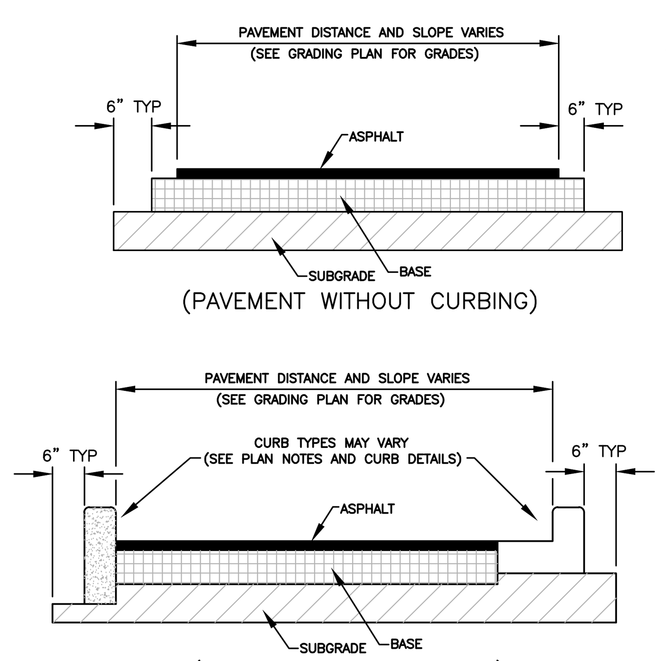

PARKING AND LIGHT USE AREAS
ASPHALT: 1-1/2" FDOT TYPE S-1 OR S-3 ASPHALTIC CONCRETE. MINIMUM MARSHALL STABILITY OF 1500 LBS. COMPACTED TO AT LEAST 95% OF ITS LABORATORY DENSITY.

BASE: 6" CRUSHED CONCRETE BASE, MIN LBR 100, COMPACTED TO AT LEAST 98% OF ITS MODIFIED PROCTOR MAXIMUM DRY DENSITY (ASTM D-1557).

SUBGRADE: 12" STABILIZED SUBGRADE, LBR 40 MINIMUM, COMPACTED TO AT LEAST 98% OF ITS MODIFIED PROCTOR MAXIMUM DRY DENSITY (ASTM D-1557).

TRUCK AND HEAVY USE AREAS
ASPHALT: 2" FDOT TYPE S-1 OR S-3 ASPHALTIC CONCRETE. MINIMUM MARSHALL STABILITY OF 1500 LBS. COMPACTED TO AT LEAST 95% OF ITS LABORATORY DENSITY.

BASE: 8" CRUSHED CONCRETE BASE, MIN LBR 100, COMPACTED TO AT LEAST 98% OF ITS MODIFIED PROCTOR MAXIMUM DRY DENSITY (ASTM D-1557).

SUBGRADE: 12" STABILIZED SUBGRADE, LBR 40 MINIMUM, COMPACTED TO AT LEAST 98% OF ITS MODIFIED PROCTOR MAXIMUM DRY DENSITY (ASTM D-1557).

NOTE:
FINAL PAVEMENT SECTIONS AND CURBING SELECTED BY OWNER/CONTRACTOR. SECTIONS TO BE VERIFIED BY OWNERS GEOTECHNICAL ENGINEER.

TYPICAL PAVEMENT SECTIONS
N.T.S.
(REFER ALSO TO GEOTECHNICAL REPORT)

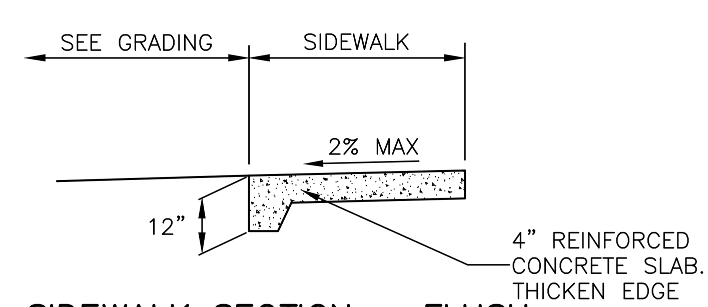

SIDEWALK SECTION – FLUSH
NTS

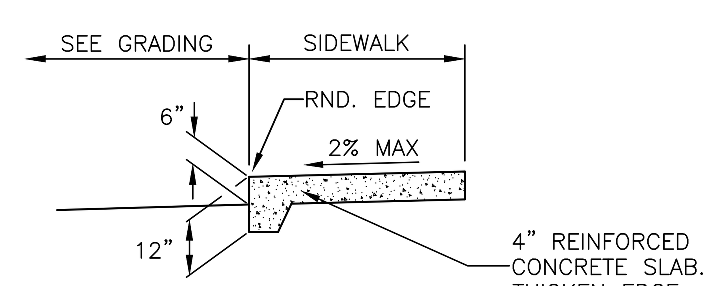

SIDEWALK SECTION – 6" CURB
NTS

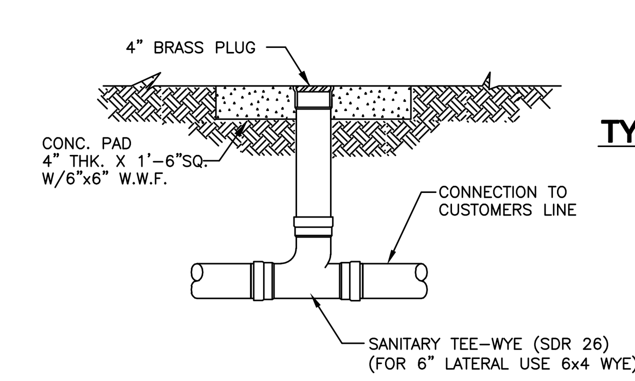

TYPICAL ON-SITE CLEAN-OUT DETAIL

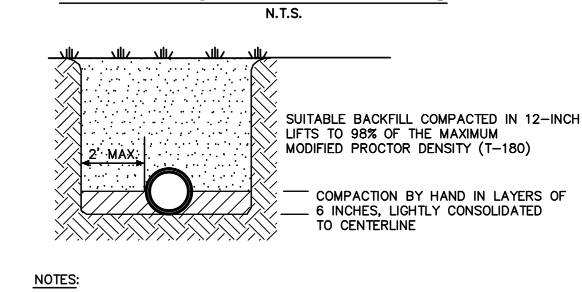

NOTES:
1. TYPE 2 TRENCH IS DEFINED AS A FLAT-BOTTOM TRENCH. BACKFILL LIGHTLY CONSOLIDATED TO CENTERLINE OF PIPE.
2. THIS STANDARD SHALL BE UTILIZED IN THE ABSENCE OF SPECIFIC STANDARDS.
3. SUITABLE BACKFILL SHALL BE DEFINED AS MATERIAL FREE FROM CINDERS, ASHES, REFUSE, ORGANIC MATTER, BOULDERS, ROCKS OR STONES, OR OTHER MATERIAL THAT IN THE OPINION OF THE ENGINEER IS UNSUITABLE.

TYPICAL TRENCHING, BEDDING AND BACKFILL DETAIL FOR NON-PAVED AREAS
N.T.S.

REVISIONS NO.	BY	DATE	DESCRIPTION
5	-	-	-
4	-	-	-
3	-	-	-
2	-	-	-
1	-	-	-

DESIGNED BY: *AARON SILVERBERG* DRAWN BY: *AARON SILVERBERG* DATE: *11-28-2018*
CHECKED BY: *CHRIS WEDDLE* APPROVED BY: *CHRIS WEDDLE* JOB NO.: *18-127*

DETAILS

NEW TAMPA RECREATION ADDITION
TAMPA, FL 33647

AURORA CIVIL ENGINEERING, INC
610 E. Morgan Street Brandon, FL 33510 (813)643-9907

This item has been electronically signed and sealed by Christopher E. Weddle, PE on 11/28/2018 using a Digital Signature.
Printed copies of this document are not considered signed and sealed and the signature must be verified on any electronic copies.

CHRISTOPHER E. WEDDLE, P.E.
FLORIDA P.E. No. 35446
AURORA CIVIL ENGINEERING, INC.
CERTIFICATE OF AUTHORIZATION No. 00008909

C-5

File: R:\Projects\FGA New Tampa Recreation Center\Plans\New Tampa Rec; Plotted: 11/28/2018 9:52 AM by AARON SILVERBERG; Saved: 11/20/2018 1:47 PM by AARON

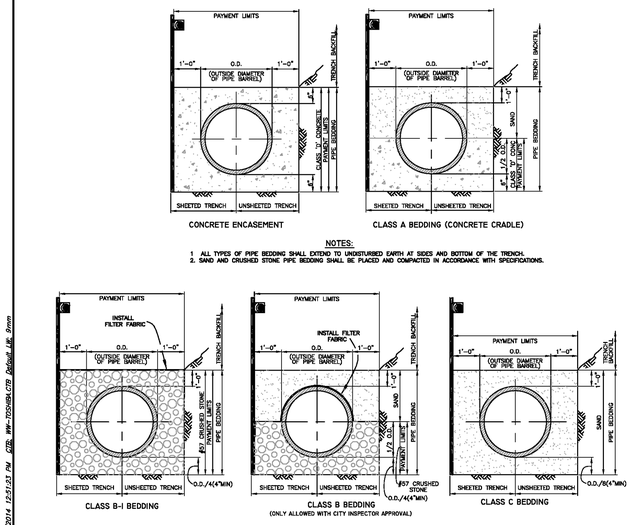

NOTES:

1 ALL TYPES OF PIPE BEDDING SHALL EXTEND TO UNDISTURBED EARTH AT SIDES AND BOTTOM OF THE TRENCH.
2. SAND AND CRUSHED STONE PIPE BEDDING SHALL BE PLACED AND COMPACTED IN ACCORDANCE WITH SPECIFICATIONS.

PIPE BEDDING DETAILS
N.T.S.

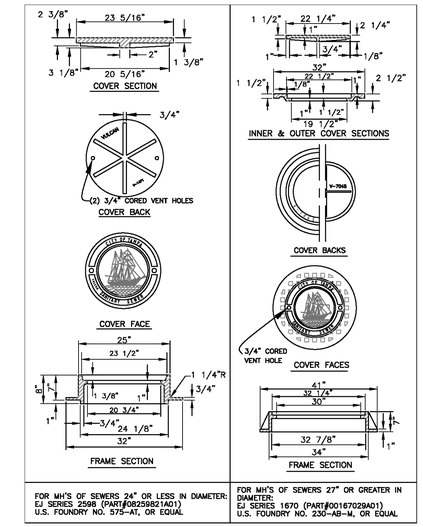

HEAVY DUTY CAST IRON MANHOLE FRAME & COVER DETAILS
N.T.S.

Date: aug2
Author: BL
Name: K:\Drafting\Standard\Details\CURRENT DETAILS\2011-DETAILS ALL STANDARDS FOR TECH MANUAL.dwg
Layout: Misc. Gravity Details Plotted: 3/25/2014 12:51:23 PM CTB: WW-TOSHIBA.CTB Default LW: 9mm

	No.	DATE	REVISIONS
JACINTO CARLOS FERRAS, P.E. #49454 DESIGN DIVISION HEAD WASTEWATER DEPARTMENT	3	02/14	CHANGED MFG NAME AND PART NUMBER FOR MH COVERS
	2	03/14	CHANGED MFG NAME AND PART NUMBER FOR MH COVERS
	1		

DES: DR
DRN: BL
CKD:
DATE:

CITY of TAMPA
WASTEWATER DEPARTMENT

STANDARD DETAILS
MISC. GRAVITY DETAILS

W.O. ----
SHEET 5 OF 15

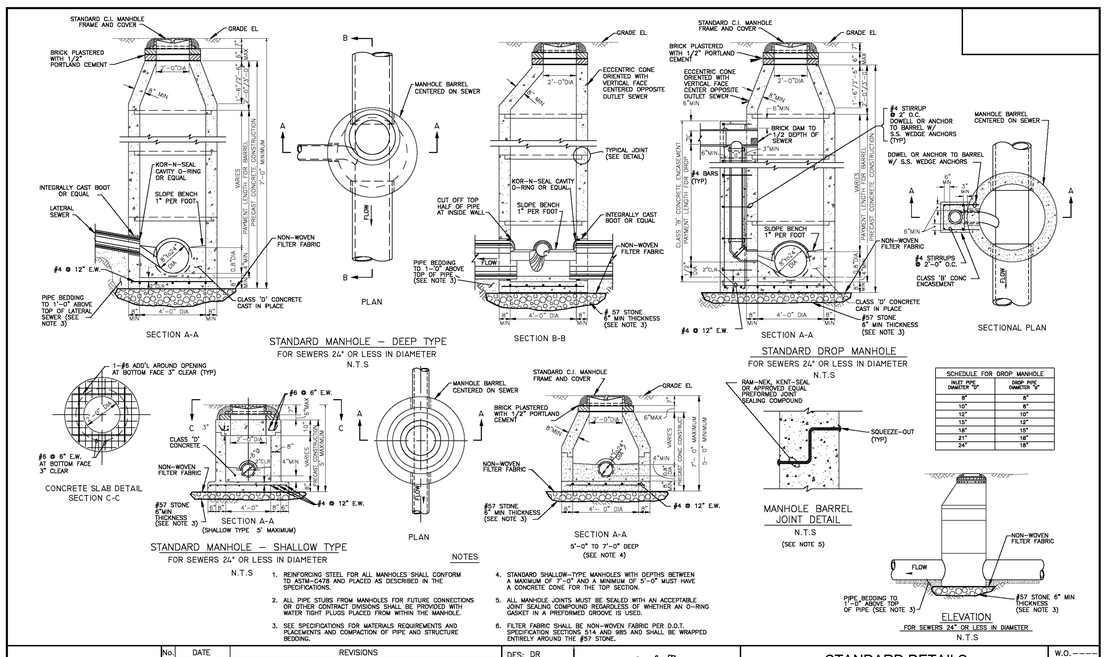

STANDARD MANHOLE – DEEP TYPE
FOR SEWERS 24" OR LESS IN DIAMETER
N.T.S

STANDARD DROP MANHOLE
FOR SEWERS 24" OR LESS IN DIAMETER
N.T.S

STANDARD MANHOLE – SHALLOW TYPE
FOR SEWERS 24" OR LESS IN DIAMETER
N.T.S

MANHOLE BARREL JOINT DETAIL
N.T.S
(SEE NOTE 5)

SCHEDULE FOR DROP MANHOLE	
INLET PIPE DIAMETER "D"	DROP PIPE DIAMETER "d"
8"	8"
10"	8"
12"	10"
15"	12"
18"	15"
21"	18"
24"	18"

ELEVATION
FOR SEWERS 24" OR LESS IN DIAMETER
N.T.S

NOTES

1. REINFORCING STEEL FOR ALL MANHOLES SHALL CONFORM TO ASTM-C478 AND PLACED AS DESCRIBED IN THE SPECIFICATIONS.
2. ALL PIPE STUBS FROM MANHOLES FOR FUTURE CONNECTIONS OR OTHER CONTRACT DIVISIONS SHALL BE PROVIDED WITH WATER TIGHT PLUGS PLACED FROM WITHIN THE MANHOLE.
3. SEE SPECIFICATIONS FOR MATERIALS REQUIREMENTS AND PLACEMENTS AND COMPACTION OF PIPE AND STRUCTURE BEDDING.
4. STANDARD SHALLOW-TYPE MANHOLES WITH DEPTHS BETWEEN A MAXIMUM OF 7'-0" AND A MINIMUM OF 5'-0" MUST HAVE A CONCRETE CONE FOR THE TOP SECTION.
5. ALL MANHOLE JOINTS MUST BE SEALED WITH AN ACCEPTABLE JOINT SEALING COMPOUND REGARDLESS OF WHETHER AN O-RING GASKET IN A PREFORMED GROOVE IS USED.
6. FILTER FABRIC SHALL BE NON-WOVEN FABRIC PER D.O.T. SPECIFICATION SECTIONS 514 AND 985 AND SHALL BE WRAPPED ENTIRELY AROUND THE #57 STONE.

Date: aug2
Author: BL
Name: K:\Drafting\Standard\Details\CURRENT DETAILS\2011-DETAILS ALL STANDARDS FOR TECH MANUAL.dwg
Layout: Standard Manhole 8 to 24 Plotted: 12/26/2013 11:06:03 AM CTB: WW-TOSHIBA_PPS-95.CTB Default LW: 25mm

	No.	DATE	REVISIONS
JACINTO CARLOS FERRAS, P.E. #49454 DESIGN DIVISION HEAD WASTEWATER DEPARTMENT	3		
	2		
	1		

DES: DR
DRN: BL
CKD:
DATE:

CITY of TAMPA
WASTEWATER DEPARTMENT

STANDARD DETAILS
STANDARD MANHOLE 8" TO 24"

W.O. ----
SHEET 9 OF 15

REVISIONS				
5				
4				
3				
2				
1				
NO.	BY	DATE	DESCRIPTION	

DRAWN BY: AARON SILVERBERG DATE: 11-28-2018
CHECKED BY: CHRIS WEDDLE APPROVED BY: CHRIS WEDDLE JOB NO.: 18-127

CITY DETAILS

NEW TAMPA RECREATION ADDITION
TAMPA, FL 33647

AURORA CIVIL ENGINEERING, INC
610 E. Morgan Street Brandon, FL 33510 (813)643-9807

This is to be to have electronically signed and sealed by Christopher Weddle, P.E. on Nov 28, 2018 using a Digital Signature.
Printed copies of this document are not considered signed and sealed and the signature must be verified on any electronic copies.
STATE OF FLORIDA No. 58446 PROFESSIONAL ENGINEER
CHRISTOPHER WEDDLE, P.E.
FLORIDA P.E. No. 58446
AURORA CIVIL ENGINEERING, INC.
CERTIFICATE OF AUTHORIZATION No. 00006999

C-6

File: R:\Projects\FGA New Tampa Recreation Center\Plans\New Tampa Rec. Plotted: 11/28/2018 9:52 AM by AARON SILVERBERG, Saved: 11/20/2018 1:47 PM by AARON

SITE DESCRIPTION

This Stormwater Pollution Prevention Plan (SWPPP) is for the construction of a parking lot. Construction activities to include clearing, excavation, fill, construction of parking areas, and stormwater system.

Located at 17302 Commerce Park, Section 15, Township 27, Range 19 in Hillsborough County, FL.

Latitude: 28.07.46.09 Longitude: 82.23.00.48

Owner: City of Tampa
306 E Jackson St
Tampa, FL 33602–5223

Civil Engineer: Aurora Civil Engineering, Inc.
610 East Morgan Street
Brandon, FL 33510
Phone: (813) 643–9907
Fax: (813) 643–9917
Attn: Chris Weddle, P.E.

Construction Plans: New Tampa Rec Expansion
SWFWMD Permit #: ––

General Contractor: ––

SEQUENCE OF CONSTRUCTION EVENTS:

1. Install staked silt fence and other erosion control features as indicated on construction plans.
2. Clear & grub for ponds to be used as sedimentation basins, (if applicable).
3. Excavate pond for sediment traps for site runoff, (if applicable).
4. Construct perimeter diversion swales to route runoff to ponds as required, (if applicable).
5. Continue clearing & grubbing of remainder of site.
6. Fill building site to grade & begin building construction.
7. Excavate remainder of ponds. Stabilize pond banks with sod or seed and mulch per plans, (if applicable).
8. Fill remainder of site & install stormwater piping system and storm piping system silt controls.
9. Construct underground utility system and parking lot base, curbing & paving.
10. Final grading and landscaping/sod installation.
11. Clean stormwater system and remove sediments from pond as required.
12. Once all site areas stabilized, remove erosion protection devices.

EROSION AND SEDIMENT CONTROLS

STABILIZATION PRACTICES:

Denude only portions of the site expected to be graded or altered within 14 days. In no case denude more than one half the site area at a time.

Temporary Stabilization – Denuded areas, soil stockpiles and other areas of the site where construction activity temporarily ceases for at least 21 days will be stabilized with temporary seed and mulch no later than 14 days after the last construction activity in that area. Hydromulch using locally recommended application for quick germinating ground cover. As an alternative, manually apply rye grain at the rate of 150 pounds per acre (or other quick germinating ground cover at recommended rate for area) along with10–10–10 fertilizer at rate recommended by manufacturer and apply 3,000 pounds per acre of straw (or other fibrous mulch) secured by crimping. Reapply as required until vegetative cover established.

Wind Erosion Stabilization – Manage fugitive dust from bare areas and areas of active construction by applying water spray to saturate surface soils. Apply water spray on a daily basis or as needed to maintain minimal dust transport. Monitor fugitive dust on a continuous basis and use additional measures as required to control off–site transport of unacceptable levels of dust. Stabilize area to be paved by spreading base material.

Permanent Stabilization – Permanently stabilize all disturbed areas with pavement, landscaping & mulch, sod, seed & mulch, etc. per plans. Maintain as required.

STRUCTURAL PRACTICES:

Prior to disturbing the site, install staked silt fence barriers and other erosion control measures per plans. Excavate portions of ponds to use as sediment basins and construct diversion swales to route site runoff into sediment basins. Inspect all aspects of the system per the inspection plan and maintain as required. Install additional erosion control measures such as staked hay or straw bales, double row of silt fence, etc. at locations of excessive erosion. Install sediment traps such as geotextile fabric with clean rock cover at sediment pond outfall locations if turbid discharge is noted.

STORM WATER MANAGEMENT:

The permanent storm water system will include curbed and paved parking areas with storm inlets. An underground stormwater piping system will convey stormwater to the ponds. Sediments accumulated in the stormwater system and ponds during construction will be removed prior to completion of the project. All pervious areas of the site disturbed during construction will be revegetated with a permanent vegetative cover.

OTHER CONTROLS

WASTE MANAGEMENT:

Collect and contain all waste materials in a controlled area in accordance with applicable regulations. All trash and construction debris to be removed from site and properly disposed. No construction debris to be buried on–site. The General Contractor for the site is responsible for assuring that all personnel are instructed regarding the correct procedures for waste disposal and will be responsible for implementing these procedures.

HAZARDOUS WASTE:

Local and state environmental agencies will be notified if any hazardous materials or waste are encountered on the site. Hazardous waste/materials will be identified, removed from the site and properly disposed per applicable regulations. Hazardous materials/waste generated and/or stored on–site will be handled, stored, transported and disposed per applicable regulations. The General Contractor for the site is responsible for assuring that all personnel are instructed regarding the correct procedures for hazardous waste/materials and will be responsible for implementing these procedures.

SANITARY WASTE:

Portable toilet units will be utilized to collect sanitary waste. Waste from portable toilet units to be collected and disposed by licensed sanitary waste hauler in accordance with applicable regulations.

OFF–SITE VEHICLE TRACKING:

Stabilized construction entrances will be constructed to minimize off–site vehicle tracking. Paved streets used for haul routes will be cleaned as needed to remove excess mud, dirt and rock tracked from the site. Dump trucks hauling material from and to the site to be covered with a tarpaulin at all times.

TIMING OF CONTROLS/MEASURES:

The Sequence of Construction (see above) will be followed as practicable.

CERTFICATION OF COMPLIANCE

This Storm Water Pollution Prevention Plan reflects applicable Federal, State and local regulations for stormwater management and erosion and sediment control.

MAINTENANCE/INSPECTION PROCEDURES

EROSION & SEDIMENT CONTROL INSPECTION AND MAINTENANCE PRACTICES

* Less than one half of the site will be denuded at one time.
* All control measures will be inspected at least once each week and following any storm event of 0.5 inches or greater.
* All measures will be maintained in good working order and; if repair is necessary, will be initiated within 24 hours of the report.
* Built up sediment will be removed from silt fences when it has reached one–third the height of the fence.
* Silt fence will be inspected for depth of sediment, tears, secure attachment to posts and firm embedment of posts in the ground.
* Sediment basin(s) will be inspected for depth of sediment and built up sediment will be removed when it reaches ten percent of the design capacity and at the end of the job.
* Other erosion control devices installed and diversion swales will be inspected and any needed repairs made within 24 hours of the report.
* Temporary and permanent seed & mulch/sod areas will be inspected for bare spots, washouts and healthy growth. Repairs and reseeding to be initiated within 24 hours of the report.
* A maintenance inspection report will be made after each inspection. A copy of the report to be completed by the inspector is attached. Reports to be kept in a bound notebook at the project site office.
* The General Contractor for the site will assign the Site Superintendent to be responsible for inspections, maintenance and repair activities. The Site Superintendent is authorized to assign responsibility for inspections and maintenance and repair activities to a designated representative(s). General Contractor to advise Owner and Engineer of the names of the Site Superintendent and designated representative(s) and provide 24 hour contact information for same. General Contractor to provide training for Site Superintendent and designated representative(s) to assure they are aware of the inspection and maintenance practices required by this SWPPP.

NON–STORM WATER DISCHARGES:

It is expected that the following non–stormwater discharges will occur from the site during the construction period:

* Water from water line flushing(s).
* Pavement wash waters (where no spills or leaks of toxic or hazardous materials have occurred).
* Uncontaminated groundwater from dewatering operations.

INVENTORY FOR POLLUTION PREVENTION PLAN:

The following materials and substances may be present on the site during construction:

* Concrete
* Detergents
* Paints (enamel & latex)
* Metal Studs
* Tar
* Fertilizers
* Petroleum Based Products and Fuels
* Cleaning Solvents
* Wood (including pressure treated)
* Masonry Block
* Roofing Shingles
* Chlorine (for disinfection of water lines)
* Asphalt
* Glass
* Stone

GOOD HOUSEKEEPING:

The following good housekeeping practices will be followed at the site during the construction of the project:

* An effort will be made to store only enough product required to do the job
* All materials stored onsite will be stored in a neat, orderly manner in appropriate containers and, if possible, under a roof or other enclosure.
* Products will be kept in their original containers with the original manufacturer's labels.
* Substances will not be mixed with one another unless recommended by the manufacturer.
* Whenever possible, all of a product will be used up before disposing of the container.
* Manufacturer's recommendation for proper use and disposal will be followed.
* The Site Superintendent will inspect daily to endure proper use and disposal of materials onsite.

These practices are use to reduce the risks associated with hazardous materials:

* Products will be kept in their original containers unless they are not re–sealable.
* Original labels and material safety data will be retained since they contain important product information.
* If surplus product must be disposed of, manufacturer's as well as local, State and Federal recommended methods for proper handling, transport and disposal will be followed.
* Prior to handling hazardous materials, personnel will receive all required training and wear appropriate personal protective equipment.

PRODUCT SPECIFIC PRACTICES:

Petroleum Products – All on–site vehicles and mobile equipment will be monitored for leaks and receive regular preventive maintenance to reduce the chance for leakage. Petroleum products will be stored in appropriately labeled approved containers. Any asphalt substances used on–site will be applied according to the manufacturer's recommendations.

Fertilizers – Fertilizers used will be applied only in the minimum amounts recommended by the manufacturer. Once applied, the fertilizer will be worked into the soil to limit exposure to storm water. Storage will be in a covered shed. The contents of any partially used bags of fertilizer will be transferred to a sealable plastic bin to avoid spills.

Paints – All containers will be tightly sealed and stored when not required for use. Excess paint will not be discharged into the storm water system but will be properly disposed of according to

Concrete Trucks – The Site Superintendent will designate an area for concrete trucks to wash out or discharge surplus concrete. A containment berm will be installed around this area to prevent runoff to the remainder of the site. Hard debris will be properly disposed off–site upon completion of the project.

SPILL CONTROL PRACTICES:

In addition to the good housekeeping and material management practices discussed in the previous sections of this plan, the following practices will be followed for spill prevention and cleanup:

* Manufacturer's recommended methods for spill cleanup will be clearly posted and site personnel will be made aware of the procedures and the location of the information and cleanup supplies.
* Material and equipment necessary for spill cleanup will be kept in the material storage area on–site. Equipment and materials will include at a minimum; brooms, dust pans, mops, rags, cloves, goggles, kitty litter, sand sawdust and plastic and metal trash containers specifically designated for this purpose.
* All spills will be cleaned up immediately after discovery.
* The spill area will be kept well ventilated and personnel will wear appropriate protective clothing & equipment to prevent injury from contact with hazardous substances.
* Spills of toxic or hazardous material will be reported to the appropriate local and State government agency, regardless of the size of the spill.
* Should a spill occur, the spill prevention plan will be adjusted to include measures to prevent the same type of spill from reoccurring and how to clean up the spill if there is another one. A description of the spill, what caused it, and the cleanup measures implemented will also be included.
* The Site Superintendent will be the spill prevention and cleanup coordinator. The Site Superintendent may designate other site personnel who will receive spill prevention and cleanup training. These individuals may be assigned responsibility for a specific phase of prevention and cleanup. The names and 24 hour contact information for the spill personnel will be posted in the material storage area and in the office trailer on–site.

NOTICE OF TERMINATION:

A Notice of Termination will be submitted to the Florida Department of Environmental Protection after the construction has been completed and the site has undergone final stabilization.

POLLUTION PREVENTION PLAN CERTIFICATION BY OWNER:

I certify under penalty of law that this document and all attachments were prepared under my direction or supervision in accordance with a system designed to assure that qualified personnel properly gathered and evaluated the information submitted. Based on my inquiry of the person or persons who manage the system, or those persons directly responsible for gathering the information, the information submitted is, to the best of my knowledge and belief, true, accurate and complete. I am aware that there are significant penalties for submitting false information, including the possibility of fine and imprisonment for knowing violations.

OWNER

NAME

TITLE

SIGNATURE

DATE

CONTRACTORS CERTIFICATION:

I certify under penalty of law that I understand the terms and conditions of the generic National Pollutant Discharge Elimination System (NPDES) permit issued pursuant to Section 403.0885, F.S. that authorizes storm water discharges associated with industrial activity from the construction site identified as part of this certification.

INDIVIDUAL RESPONSIBLE
COMPANY
RESPONSIBILITY
NAME:

General Contractor
TITLE:

SIGNATURE:

DATE:

NAME:

Site Contractor
TITLE:

SIGNATURE:

DATE:

NAME:

TITLE:

SIGNATURE:

DATE:

REVISIONS NO.	BY	DATE	DESCRIPTION
5	–	–	–
4	–	–	–
3	–	–	–
2	–	–	–
1	–	–	–

DESIGNED BY: AARON SILVERBERG
DRAWN BY: AARON SILVERBERG
DATE: 11–28–2018
CHECKED BY: CHRIS WEDDLE
APPROVED BY: CHRIS WEDDLE
JOB NO.: 18–127

STORMWATER POLLUTION PREVENTION PLAN

NEW TAMPA RECREATION ADDITION

TAMPA, FL 33647

AURORA CIVIL ENGINEERING, INC
610 E. Morgan Street Brandon, FL 33510 (813)643–9907

CHRISTOPHER E. WEDDLE, LICENSE No. 35446 STATE OF FLORIDA PROFESSIONAL ENGINEER

This item has been electronically signed and sealed by Christopher E. Weddle, PE on 11/28/2018 using a Digital Signature.
Printed copies of this document are not considered signed and sealed and the signature must be verified on any electronic copies.

CHRISTOPHER E. WEDDLE, P.E.
FLORIDA P.E. No. 35446
AURORA CIVIL ENGINEERING, INC.
CERTIFICATE OF AUTHORIZATION No. 00008909

SP–1

File: R:\Projects\FGA New Tampa Recreation Center\Plans\New Tampa Rec; Plotted: 11/28/2018 9:52 AM by AARON SILVERBERG; Saved: 11/20/2018 1:47 PM by AARON

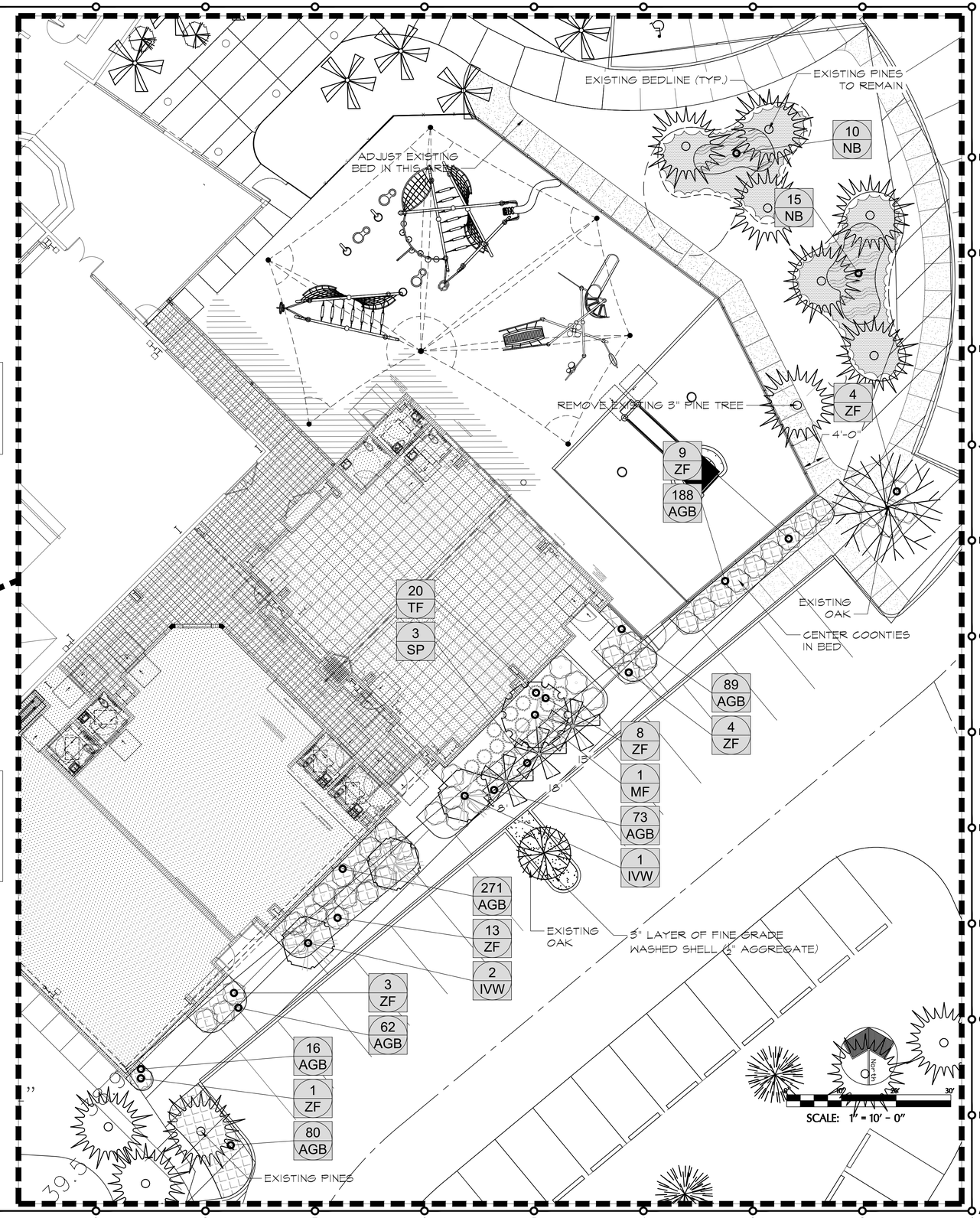

IRRIGATION:
CONTRACTOR SHALL ADJUST AND RETROFIT EXISTING IRRIGATION AS NEEDED TO ASSURE 100% IRRIGATION TO PLANTED AREAS WITH EXCEPTION OF SWALE PLANTINGS

NOTE: LANDSCAPE CONTRACTOR TO REMOVE CATTAILS THIS AREA

EXISTING LANDSCAPE AS PER APPROVED AND INSTALLED PHASE I SITE PLAN

EXISTING LANDSCAPE, IRRIGATION AND BERMS SHALL BE USED TO MEET THE INTENT OF CHAPTER 13 AND CHAPTER 27.

SUPPLEMENT EXISTING SWALE VEGETATION WITH 150 NB

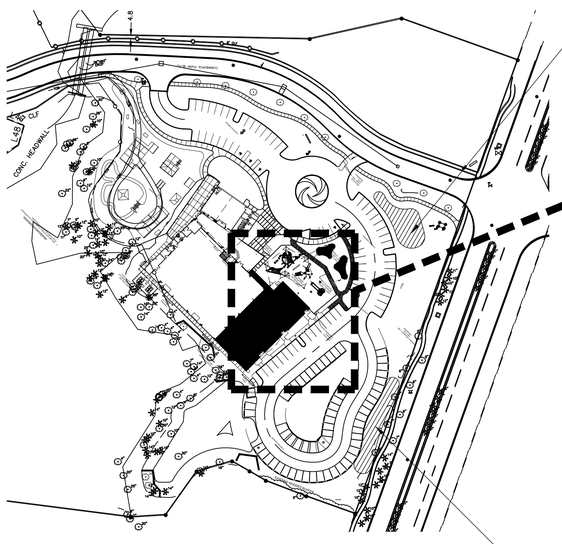

KEY MAP N.T.S.

PLANT LIST

QUANTITY	KEY	Botanical Name	Common Name	HEIGHT	SPREAD	CALIPER	ROOT	SPACING	REMARKS
		TREES							
3	IVW	Ilex vomitoria 'Weeping Yaupon'	Weeping Yaupon Holly	14'	60"	4"	#100	12' O.C.	STD, container size must be maintained
1	MF	Myricanthes fragrans	Simpson Stopper	8'	60"	2" multi	#30		Berries
3	SP	Sabal palmetto	Cabbage Palm	See Plan	H-CUT		B&B	8' O.C.	See plan view for heights, trunk shall be placed no closer than 8' from building
		SHRUBS							
20	TF	Tripsicum floridanum	Dwarf gama grass	18"-24"	9"-12"		#3	3' O.C.	
42	ZF	Zamia floridana	Coontie	20"	24"		#7	4' O.C.	
		GROUNDCOVERS							
938	AGB	Arachis glabrata Benth 'EcoTurf'	EcoTurf	4"			As sod		Quantity shown as square footage, provide complete coverage in each bed as shown
175	NB	Nephrolepis biserrata	Macho Fern				#1	3' O.C.	

EKISTICS DESIGN STUDIO
URBAN PLANNING
LANDSCAPE ARCHITECTURE
APPLIED ECOLOGY
1202 W. LINEBAUGH AVE.
TAMPA, FL 33612
(813) 933-8040

FleischmanGarcia.
ARCHITECTURE · PLANNING · INTERIOR DESIGN
SARASOTA OFFICE
1934 HYDE PARK AVENUE, SUITE 100
SARASOTA, FLORIDA 34239
PHONE: (941) 366-1914
FAX: (941) 366-1916
5967 CATTLEMEN LANE, SUITE 6
SARASOTA, FLORIDA 34232
PHONE: (941) 342-9293
FAX: (941) 342-9253
REGISTRATION NUMBER AA C000123

NEW TAMPA RECREATION CENTER ADDITION

TAMPA, FL 33647

THE DESIGN AND DRAWING IS THE SOLE PROPERTY OF FLEISCHMAN/GARCIA, INC. PARTS OF THIS DRAWING MAY BE REPRODUCED WITHOUT PRIOR WRITTEN PERMISSION FROM FLEISCHMAN/GARCIA.

I CERTIFY TO THE BEST OF MY KNOWLEDGE THAT THESE DRAWINGS COMPLY W/ ALL RELEVANT BUILDING CODES

FGA PROJECT NUMBER
18015

ISSUE DATE
08/30/18

SHEET NUMBER
LA1.0

Home Ekistics\PROJECTS\F-1107 New Tampa Community Center\PHASE 2\ACAD\PLANS\2018-07-25 NTRC EXPANSION landscape.dwg
08-27-18

LANDSCAPE SPECIFICATIONS

1. ALL PLANT MATERIAL SHALL BE FLORIDA GRADE NO.1 OR BETTER PER "GRADES AND STANDARDS FOR NURSERY PLANTS, PART I & II", FLORIDA DEPARTMENT OF AGRICULTURE, TALLAHASSEE, FL.

2. ALL PERMITS NECESSARY FOR INSTALLATION/CONSTRUCTION ARE TO BE PROVIDED BY THE LANDSCAPE CONTRACTOR UNLESS OTHERWISE SPECIFICALLY STATED IN THE LANDSCAPE PLANS OR NOTES.

3. INSTALLATION OF LANDSCAPE MUST BE COORDINATED WITH OTHER SUBCONTRACTORS. THE LANDSCAPE CONTRACTOR WILL BE RESPONSIBLE FOR LOCATING UNDERGROUND UTILITIES PRIOR TO EXCAVATION.

4. THE CONTRACTOR SHALL NOTIFY THE LANDSCAPE ARCHITECT IF ANY CONFLICTS ARISE BETWEEN THE PROPOSED DESIGN AND EXISTING CONDITIONS ON-SITE.

5. THE CONTRACTOR IS RESPONSIBLE FOR FAMILIARIZING HIMSELF WITH ON-SITE CONDITIONS AS PART OF THE BIDDING PROCESS. THE CONTRACTOR SHALL NOTIFY THE LANDSCAPE ARCHITECT PRIOR TO AWARD OF CONTRACT OF ANY ON-SITE CONDITIONS THAT WOULD HINDER THE NORMAL, HEALTHY GROWTH OF PLANT SPECIES PROPOSED ON THESE PLANS.

6. THE LANDSCAPE ARCHITECT MAY BE CONTACTED FOR ASSISTANCE IN LAYOUT OF PLANT MATERIAL, IF NEEDED. ALL QUESTIONS REGARDING PLANT PLACEMENT MUST BE RESOLVED PRIOR TO COMMENCEMENT OF INSTALLATION.

7. CAREFULLY REVIEW THE LANDSCAPE MATERIAL SPECIFICATIONS. ALL MATERIALS MUST BE AS SPECIFIED ON THE LANDSCAPE PLANS. IF MATERIALS OR LABOR DO NOT ADHERE TO SPECIFICATIONS, THE LANDSCAPE ARCHITECT WILL REJECT THEM.

8. THE LANDSCAPE ARCHITECT WILL ACCEPT NO SUBSTITUTIONS OF PLANT MATERIAL/SPECIES WITHOUT WRITTEN APPROVAL. CONTRACTOR SHALL SUBMIT TO THE LANDSCAPE ARCHITECT PROOF OF NON-AVAILABILITY AND A PROPOSAL FOR THE USE OF EQUIVALENT MATERIAL.

9. PLANT MATERIAL QUANTITIES SHOWN ON THESE PLANS ARE SUPPLIED AS AN AID TO THE CONTRACTOR FOR BIDDING PURPOSES. FINAL QUANTITY TAKEOFFS ARE THE RESPONSIBILITY OF THE CONTRACTOR. NOTIFY THE LANDSCAPE ARCHITECT IF ANY DISCREPANCIES EXIST PRIOR TO PROCEEDING WITH ANY CHANGES IN MATERIAL QUANTITIES.

10. PLANT SPECIFICATIONS OF HEIGHT, CLEAR TRUNK, SPREAD AND CONTAINER SIZE SHOWN ON THE PLANS ARE MINIMUM ACCEPTABLE SIZES. ALL INSTALLED MATERIAL SHALL MEET OR EXCEED THE GIVEN SPECIFICATIONS. THE CONTRACTOR SHALL SUBMIT TO THE LANDSCAPE ARCHITECT PROOF OF NON-AVAILABILITY AND A PROPOSAL FOR THE USE OF EQUIVALENT MATERIAL.

11. THE GENERAL CONTRACTOR IS RESPONSIBLE FOR ROUGH GRADING THE SITE TO WITHIN 0.10 FT. OF GRADES SHOWN ON THESE PLANS. THE LANDSCAPE CONTRACTOR IS RESPONSIBLE FOR FINISH GRADES IN ALL LANDSCAPE AREAS. ALL PROPOSED CONTOURS SHOWN ON THE LANDSCAPE PLANS ARE TO BE GRADED TO A MAXIMUM SLOPE OF 3:1.

12. PLANTING BEDS SHALL BE TREATED WITH A USEPA APPROVED PRE-EMERGENT HERBICIDE PRIOR TO INSTALLATION OF PLANT MATERIAL. CONTRACTOR SHALL FOLLOW MANUFACTURER'S SPECIFICATIONS FOR APPLICATION RATES, ETC.

13. PLANTING BEDS SHALL BE FINISHED WITH A 3" LAYER OF "HARDWOOD MULCH" OR APPROVED EQUAL.

14. PLANTING PITS SHALL BE AMENDED AND BACKFILLED WITH A MIXTURE OF ONE PART GOOD QUALITY PEAT OR COMPOSTED FINES, AND ONE PART NATIVE SOIL OR APPROVED EQUAL. ALL ANNUAL BEDS SHALL BE FILLED TO A DEPTH OF TEN INCHES WITH AN APPROVED SOIL MIX. CONTRACTOR SHALL SUBMIT SAMPLES FOR APPROVAL. CONTRACTOR SHALL ALSO PLACE AN APPROPRIATE QUANTITY OF "AGRIFORM" SLOW RELEASE FERTILIZER TABLETS INTO EACH PLANT PIT.

15. THE CONTRACTOR IS RESPONSIBLE FOR APPROPRIATE WATERING AND MAINTENANCE OF ALL PLANT MATERIAL DURING THE INSTALLATION PHASE. ANY DEAD OR DEFICIENT PLANT MATERIAL WILL BE REPLACED PRIOR TO FINAL ACCEPTANCE BY THE OWNER.

16. THE CONTRACTOR SHALL WARRANTY ALL WORKMANSHIP AND MATERIALS. TREES SHALL BE WARRANTED FOR ONE YEAR, SHRUBS AND GROUNDCOVER SHALL BE WARRANTED FOR SIX MONTHS.

17. THE CONTRACTOR SHALL VERIFY THAT THE SOIL IS FREE OF EXCESS CLAY, DEBRIS AND TRASH AND HAS A PH LEVEL SUITABLE FOR OPTIMAL GROWING CONDITIONS PRIOR TO IMPLEMENTATION OF THE PROPOSED PLAN.

18. ALL LANDSCAPE BIDS SHALL PROVIDE UNIT PRICE BREAKDOWNS FOR PLANTS AND SUPPLEMENTAL MATERIALS.

19. ALL LANDSCAPED AREAS SHALL EITHER BE MULCHED OR SODDED IN ACCORDANCE WITH LOCAL MUNICIPAL OR JURISDICTIONAL REGULATIONS.

20. AFTER COMPLETION OF PLANTING, THE CONTRACTOR SHALL REMOVE ALL ROPE "CROSS-TIES" FROM THE TOP OF THE ROOTBALL AND CUT THE WIREBASKET AWAY FROM THE TOP OF THE ROOTBALL.

FERTILIZATION - TREES, SHRUBS & GROUNDCOVERS

ALL PLANTINGS SHALL BE FERTILIZED WITH AGRIFORM 20-10-15 PLANTING TABLETS AT THE TIME OF INSTALLITION AND PRIOR TO COMPLETION OF BACKFILLING. AGRIFORM PLANTING TABLETS SHALL BE PLACED UNIFORMILY AROUND THE ROOT MASS AT THE DEPTH THAT IS BETWEEN THE MIDDLE AND THE BOTTOM OF THE ROOT MASS.

APPLICATION RATES

21 GRAM TABLET						10 GRAM TABLET	5 GRAM TABLET
1 GALLON CAN PLANTS	3 GALLON CAN PLANTS	5 GALLON CAN PLANTS	7 GALLON CAN PLANTS	LARGE TREES OR B&B TREES	MATURE PALMS	WELL-ROOTED LINERS	SMALL GROUNDCOVERS OR PERENNIALS
1 TABLET	2 TABLETS	3 TABLETS	4 TABLETS	TREES: 5 TABLETS FOR EA. 1/2" OF CALIPER SHRUBS: 1 TABLET FOR EA. 1' OF HEIGHT	10 TABLETS PER PALM	1 TO 2 TABLETS	1 TABLET

AGRIFORM 20-10-5 PLANTING TABLETS AS MANUFACTURED BY:
SIERRA CHEMICAL COMPANY
1001 YOSEMITE DRIVE
MILPITAS, CA 95035

NOTE: LANDSCAPE ARCHITECT MAY MAKE A RANDOM SAMPLING OF PLANT PITS TO DETERMINE THE UNIFORMITY OF APPLICATION.

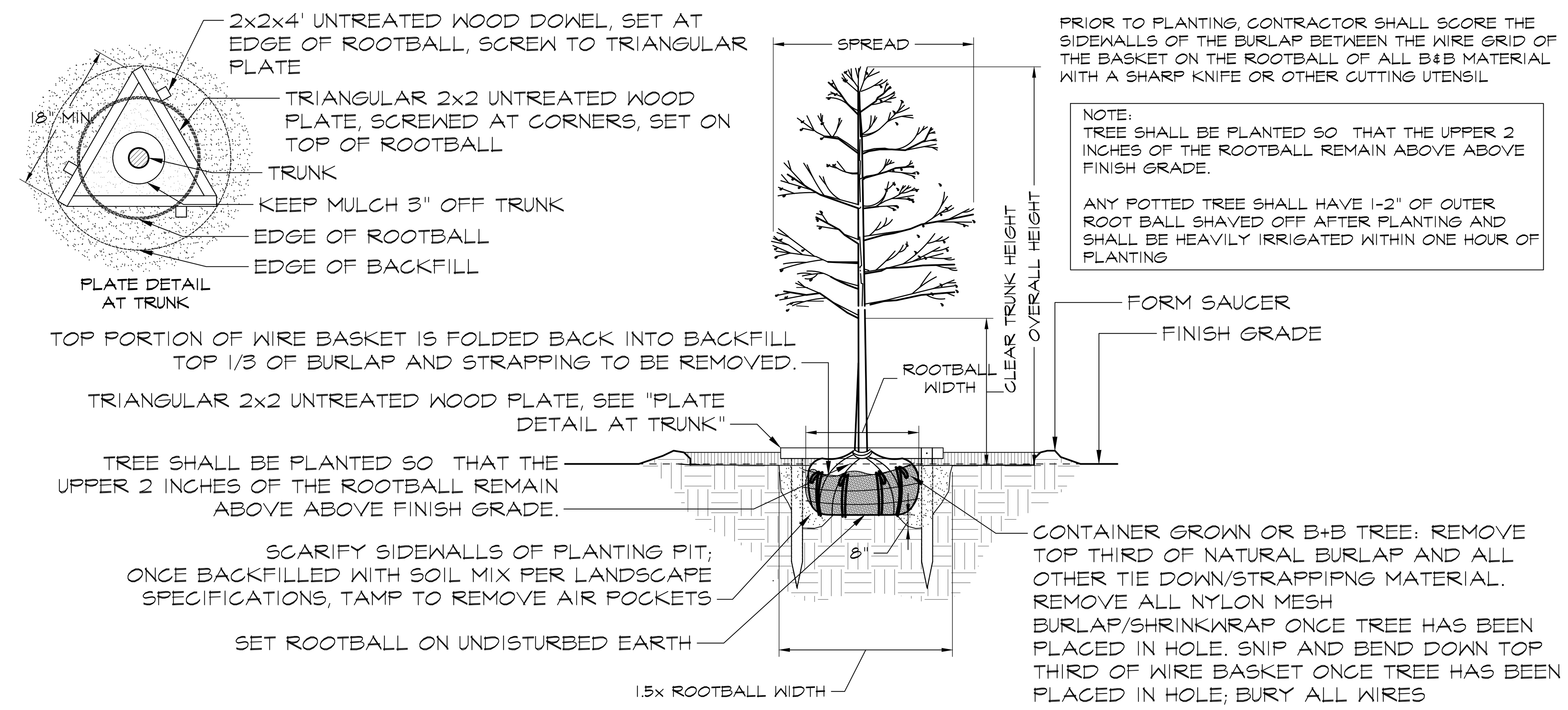

A TREE PLANTING, STAKING & PRUNING
SCALE:

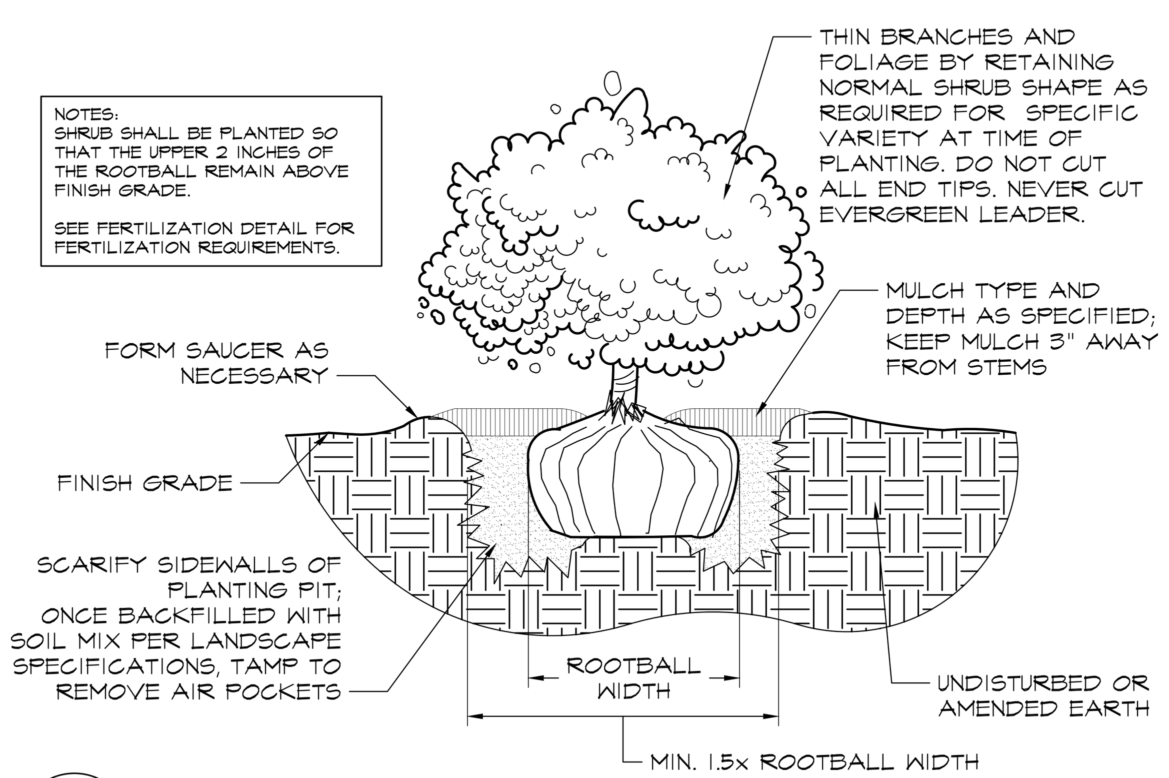

B SHRUB PLANTING DETAIL
SCALE:

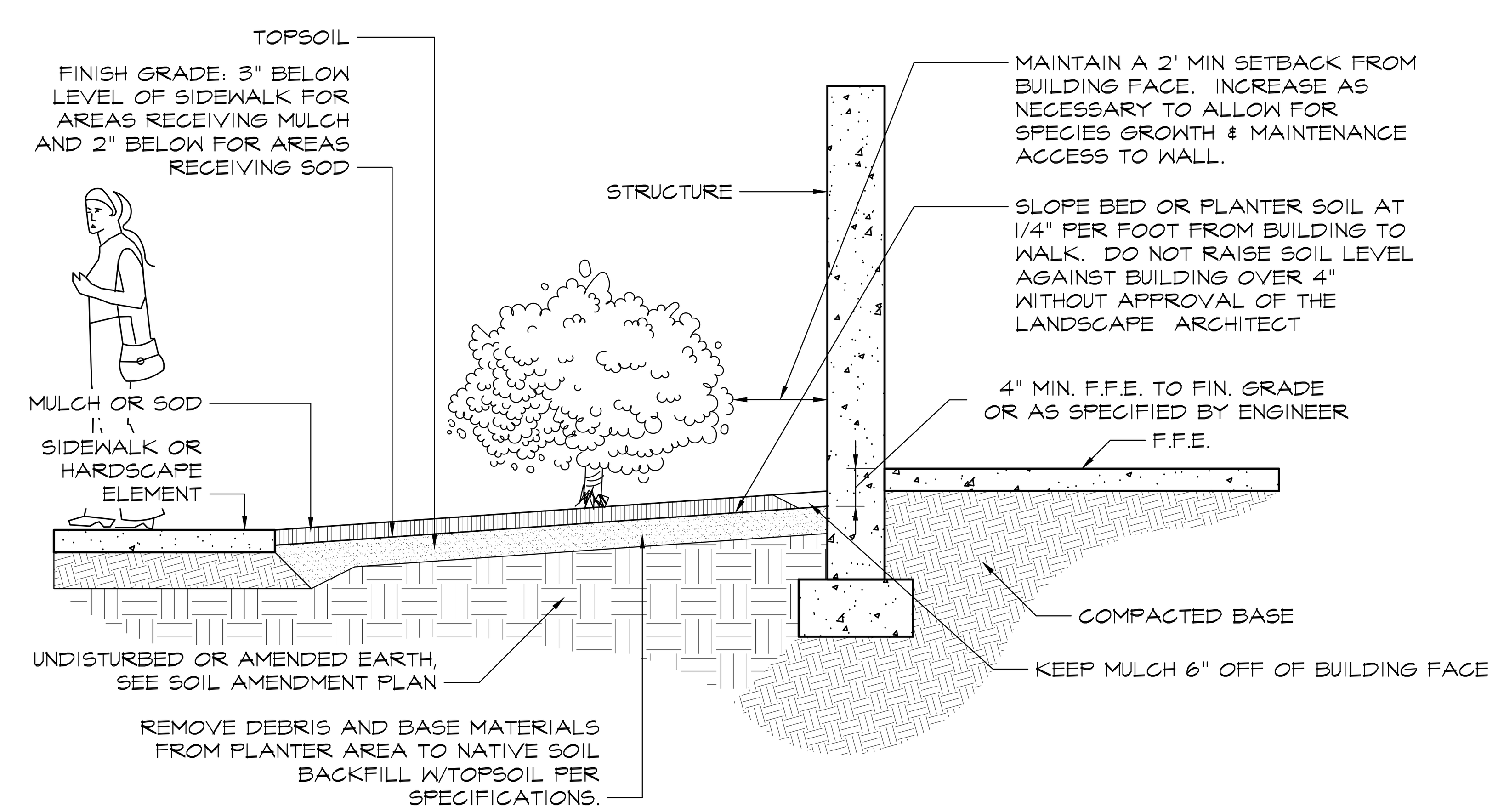

C PLANTING BED DETAIL
SCALE:

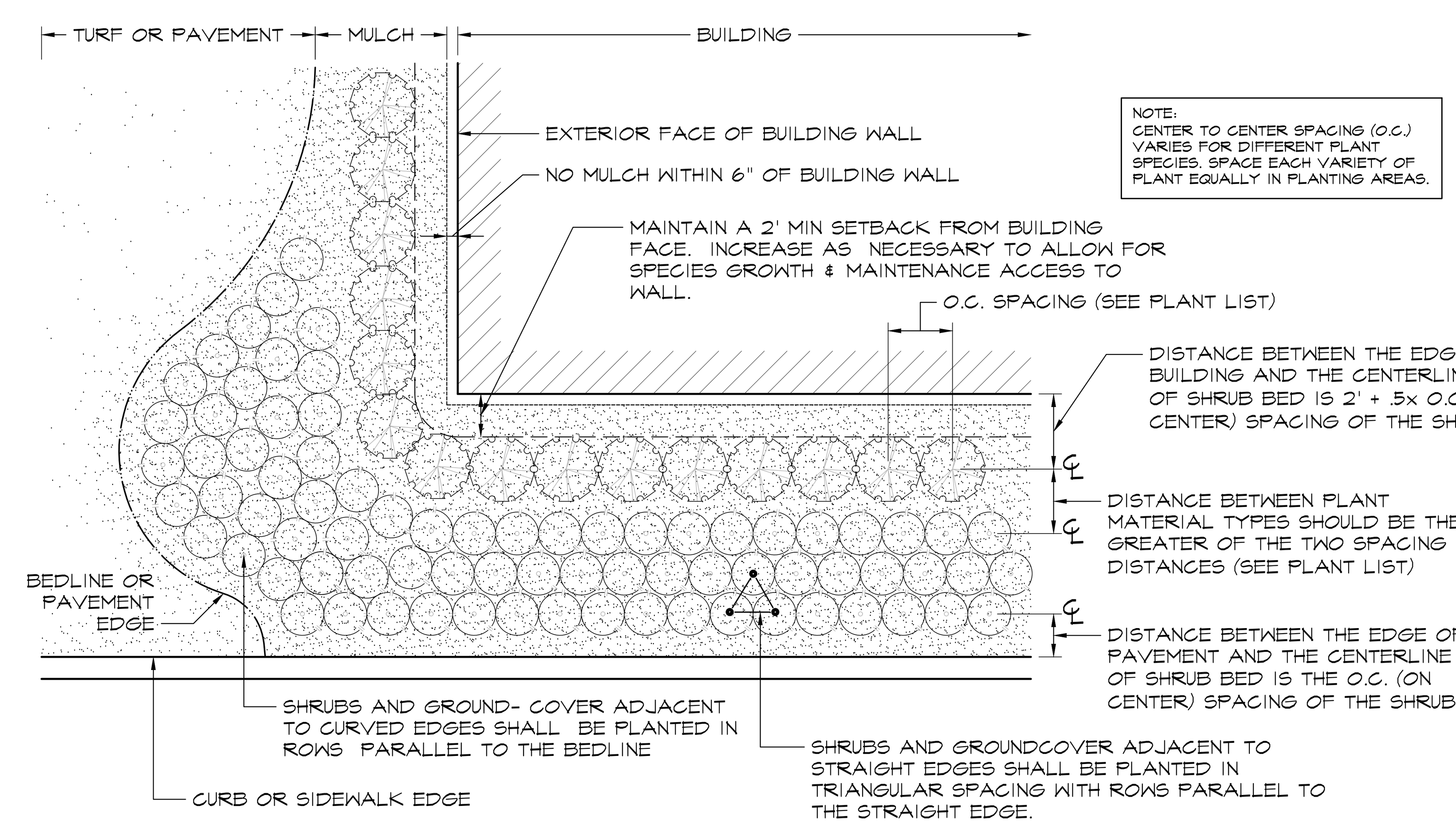

D PLANTING ISLAND DETAIL
SCALE:

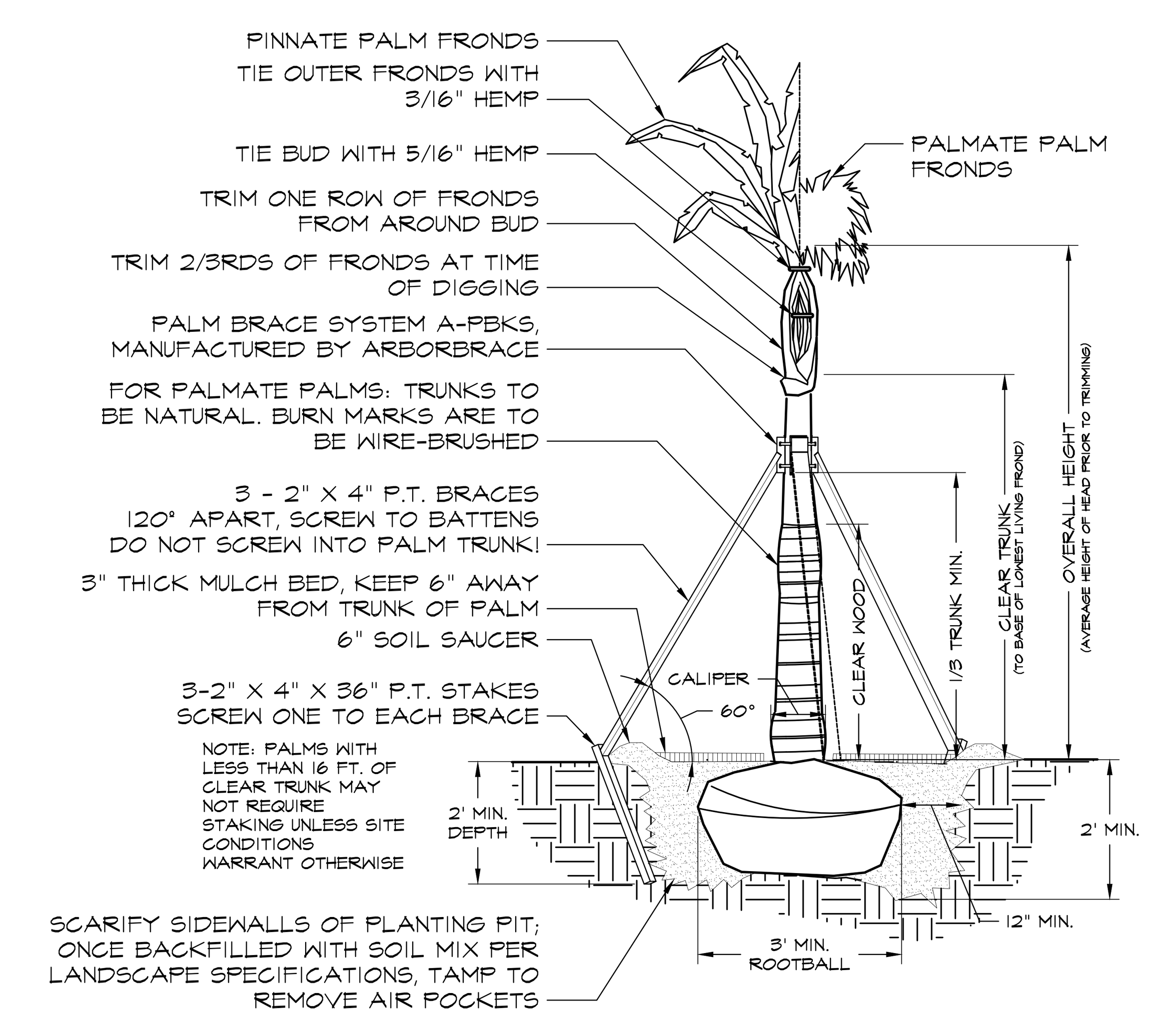

E PALM PLANTING & STAKING DETAIL
SCALE:

EKISTICS DESIGN STUDIO INC
URBAN PLANNING
LANDSCAPE ARCHITECTURE
APPLIED ECOLOGY
1202 W LINEBAUGH AVE.
TAMPA, FL 33612
(813) 931-8040

FleischmanGarcia
ARCHITECTURE • PLANNING • INTERIOR DESIGN
SAFETY HARBOR OFFICE
195 FOURTH AVENUE NORTH
SAFETY HARBOR, FLORIDA 34695
PHONE (727) 725-8880
FAX (727) 725-3900
TAMPA OFFICE
324 HYDE PARK AVENUE, SUITE 300
TAMPA, FLORIDA 33606
PHONE (813) 251-4400
FAX (813) 251-1994
REGISTRATION NUMBER AA C000123
SARASOTA OFFICE
5967 CATTLEMEN LANE, SUITE 6
SARASOTA, FLORIDA 34232
PHONE (941) 342-9293
FAX (941) 342-9253

NEW TAMPA RECREATION CENTER ADDITION
TAMPA, FL 33647

THIS DESIGN AND DRAWING IS THE SOLE PROPERTY OF FLEISCHMANGARCIA. NO PART OF THIS WORK MAY BE REPRODUCED WITHOUT PRIOR WRITTEN PERMISSION FROM FLEISCHMANGARCIA.

I CERTIFY TO THE BEST OF MY KNOWLEDGE THAT THESE DRAWINGS COMPLY W/ ALL RELEVANT BUILDING CODES

FGA PROJECT NUMBER
18015

ISSUE DATE
08/30/18

SHEET NUMBER
LA2.0

08-27-18 Homer Ekistics X:\PROJECTS\F-1107 New Tampa Community Center\PHASE 2\ACAD\PLANS\2018-07-25 NTRC EXPANSION landscape.dwg

ARCHITECTURAL ABBREVIATIONS (E4, N/A)

AFF	ABOVE FINISHED FLOOR
ATS	ABOVE TOP OF SLAB
ACOU	ACOUSTICAL
APC	ACOUSTICAL PANEL CEILING
ADD'L	ADDITIONAL
ADJ	ADJACENT
ADJS	ADJUSTABLE
A/C	AIR CONDITIONING
AHU	AIR HANDLING UNIT
ALUM	ALUMINUM
ALT	ALTERNATE
ADA	AMERICANS WITH DISABILITIES ACT
AB	ANCHOR BOLT
APPR	APPROVE, APPROVED
APPROX	APPROXIMATE
ARCH	ARCHITECT, ARCHITECTURAL
A/E	ARCHITECT/ENGINEER
AVE	AVENUE
AVG	AVERAGE
BD	BOARD
BLVD	BOULEVARD
BLK	BLOCK
BLKG	BLOCKING
BOT	BOTTOM
BLDG	BUILDING
BM	BEAM
BRG	BEARING
BUR	BUILT UP ROOFING
X	BY
CAB	CABINET
CPT	CARPET
CLG	CEILING
CEM	CEMENT
CTR	CENTER
CER	CERAMIC
CT	CERAMIC TILE
CHKBD	CHALKBOARD
CIR	CIRCLE
CCTV	CLOSED CIRCUIT TELEVISION
CFA	CLEAR FLOOR AREA (ADA)
CLO	CLOSET
COL	COLUMN
CONC	CONCRETE
CMU	CONCRETE MASONRY UNIT
CONF	CONFERENCE
CONST	CONSTRUCTION
CONT	CONTINUOUS, CONTINUE
CONTR	CONTRACT, CONTRACTOR
CJ	CONTROL JOINT, CONSTRUCTION JOINT
CRD	COORDINATE
CORR	CORRIDOR
CU FT	CUBIC FOOT
CFM	CUBIC FEET PER MINUTE
CYD	CUBIC YARD
D	DEEP, DEPTH
DEMO	DEMOLISH, DEMOLITION
DTL	DETAIL
DIAG	DIAGONAL
DIA	DIAMETER
DIM	DIMENSION
DW	DISHWASHER
DIV	DIVISION
DR	DOOR
DBL	DOUBLE
DN	DOWN
DS	DOWNSPOUT
DWR	DRAWER
DWG	DRAWING
DF	DRINKING FOUNTAIN
EA	EACH
ELEC	ELECTRIC, ELECTRICAL
EWC	ELECTRIC WATER COOLER
EWH	ELECTRIC WATER HEATER
ELEV	ELEVATION
EL	ELEVATOR
EMER	EMERGENCY
EH	EMOTIONALLY HANDICAPPED
ENCL	ENCLOSURE
EQ	EQUAL
EQUIP	EQUIPMENT
ETC	ETCETERA
EXH	EXHAUST
EXIST	EXISTING
ETR	EXISTING TO REMAIN
EXP	EXPANSION
EJ	EXPANSION JOINT
EXT	EXTERIOR
EIFS	EXTERIOR INSULATION FINISH SYSTEM
FV	FIELD VERIFY
FIN	FINISH, FINISHED
FA	FIRE ALARM
FE	FIRE EXTINGUISHER
FEC	FIRE EXTINGUISHER CABINET
FHC	FIRE HOSE CABINET
FH	FIRE HYDRANT
FPL	FIREPLACE
FL	FLOOR, FLOORING
FD	FLOOR DRAIN
FBC	FLORIDA BUILDING CODE
FDOT	FLORIDA DEPARTMENT OF TRANSPORTATION
FLUOR	FLUORESCENT
FT	FEET, FOOT
FTG	FOOTING
FND	FOUNDATION
GA	GAGE, GAUGE
GALV	GALVANIZED
GC	GENERAL CONTRACTOR
GL	GLASS, GLAZING
GB	GRAB BAR
GYP	GYPSUM
GFRC	GLASS FIBER REINFORCED CONCRETE
GFRG	GLASS FIBER REINFORCED GYPSUM
GFI	GROUND FAULT INTERRUPT
HDP	HIGH DENSITY POLYURETHANE
HDW	HARDWARE
HTG	HEATING
HVAC	HEATING/VENTILATION/AIR CONDITIONING
HT	HEIGHT
H	HIGH
HC	HOLLOW CORE
HM	HOLLOW METAL
HORIZ	HORIZONTAL
HB	HOSE BIBB
HR	HOUR
HWY	HIGHWAY
IMPR	IMPREGNATED
INCAN	INCANDESCENT
IN	INCH
INCL	INCLUDE, INCLUDED, INCLUDING
INFO	INFORMATION
ID	INSIDE DIAMETER
INSUL	INSULATION
INT	INTERIOR
JAN	JANITOR
JT	JOINT
JST	JOIST
JBOX	JUNCTION BOX
KCJ	KEYED CONTROL JOINT
LAB	LABORATORY
LAM	LAMINATE, LAMINATED
LA	LANDSCAPE ARCHITECT
LAV	LAVATORY
LT	LIGHT
LED	LIGHT EMITTING DIODE
LTG	LIGHTING
LF	LINEAL FEET
L	LONG, LENGTH
LLH	LONG LEG HORIZONTAL
LLV	LONG LEG VERTICAL
MAINT	MAINTENANCE
MM	MILLIMETER
MH	MANHOLE
MFR	MANUFACTURE, MANUFACTURER
MFR'D	MANUFACTURED
MKBD	MARKERBOARD
MAS	MASONRY
MO	MASONRY OPENING
MAT'L	MATERIAL
MAX	MAXIMUM
MECH	MECHANIC, MECHANICAL
ME	MECHANICAL ENGINEER
MDF	MEDIUM DENSITY FIBERBOARD
MTL	METAL
MEZZ	MEZZANINE
M	MINUTE
MISC	MISCELLANEOUS
MTD	MOUNTED
MUL	MULLION
NEC	NATIONAL ELECTRIC CODE
NGVD	NATIONAL GEODETIC VERTICAL DATUM
NRC	NOISE REDUCTION COEFFICIENT
NOM	NOMINAL
NAVD	NORTH AMERICAN VERTICAL DATUM
N/A	NOT APPLICABLE
NIC	NOT IN CONTRACT
NTS	NOT TO SCALE
NOA	NOTICE OF ACCEPTANCE
NO, #	NUMBER
OFF	OFFICE
OC	ON CENTER
OPNG	OPENING
OPP	OPPOSITE
OZ	OUNCE
OD	OUTSIDE DIAMETER
OA	OVERALL
OH	OVERHEAD
PNT	PAINT (PAINTED FINISH)
POLYISO	POLYISOCYANURATE
PR	PAIR
PTD	PAPER TOWEL DISPENSER
PERP	PERPENDICULAR
PC	PERSONAL COMPUTER
PL	PLATE
PLS	PLASTER
PLAM	PLASTIC LAMINATE
PLBG	PLUMBING
P'WD	PLYWOOD
PVC	POLYVINYL CHLORIDE
CEM PLS	PORTLAND CEMENT PLASTER
LB, #	POUND
PCF	POUNDS PER CUBIC FOOT
PSI	POUNDS PER SQUARE INCH
PSF	POUNDS PER SQUARE FOOT
P-I-P	POURED IN PLACE
PEMB	PRE-ENGINEERED METAL BUILDING
PREFAB	PREFABRICATE, PREFABRICATED
PREFIN	PREFINISH, PREFINISHED
PT	PRESSURE TREATED
QTY	QUANTITY
R	RADIUS
RECT	RECTANGULAR
REF	REFERENCE
RCP	REFLECTED CEILING PLAN
REFR	REFRIGERATOR
REG	REGULAR
REINF	REINFORCE, REINFORCED, REINFORCING
REBAR	REINFORCING BAR
REQ'D	REQUIRED
RES	RESILIENT
REV	REVISION, REVISED
R/W	RIGHT OF WAY
RD	ROOF DRAIN
RM	ROOM
RO	ROUGH OPENING
SNV	SANITARY NAPKIN VENDOR
SND	SANITARY NAPKIN DISPOSAL
SCJ	SAWED CONTROL JOINT
SCH	SCHEDULE
SHTH'G	SHEATHING
SIL	SILICONE
SIM	SIMILAR
SHT	SHEET
SD	SOAP DISPENSER
SC	SOLID CORE
STC	SOUND TRANSMISSION COEFFICIENT
SPKR	SPEAKER
SPEC	SPECIFICATION
SQ	SQUARE
SF	SQUARE FOOT, SQUARE FEET
SS	STAINLESS STEEL
STD	STANDARD
STL	STEEL
STO	STORAGE
ST	STREET
STR	STRUCTURE, STRUCTURAL
SUSP	SUSPENDED
SW	SWITCH
SYM	SYMMETRY, SYMMETRICAL
TKBD	TACKBOARD
TEL	TELEPHONE
TV	TELEVISION
TEMP	TEMPORARY
TH	THICK, THICKNESS
THR	THRESHOLD
TBD	TO BE DETERMINED
T	TOILET
TPD	TOILET PAPER DISPENSER
T&G	TONGUE AND GROOVE
T&B	TOP AND BOTTOM
T.O	TOP OF
TB	TOWEL BAR
TR	TREAD
TYP	TYPICAL, UNLESS OTHERWISE NOTED
UC	UNDERCUT
UL	UNDERWRITER'S LABORATORY
VTR	VENT THROUGH ROOF
VERT	VERTICAL
VEST	VESTIBULE
VCT	VINYL COMPOSITION TILE
VWC	VINYL WALL COVERING
WSCT	WAINSCOT
WC	WATER CLOSET
WH	WATER HEATER
WP	WEATHERPROOF
WR	WASTE RECEPTACLE
WT	WEIGHT
WWF	WELDED WIRE FABRIC
W	WIDE, WIDTH
W/	WITH
W/O	WITHOUT
WD	WOOD
YD	YARD

APPROVED PRODUCTS SCHEDULE (A10, N/A)

CATEGORY	SUBCATEGORY	MANUFACTURER / PRODUCT NAME / NUMBER	DOCUMENTATION TYPE (PER FLORIDA ADMINISTRATIVE CODE 9B-72.070): STATE OF FLORIDA APPROVAL NO.	METHOD (1 OR 2), LETTER CODE	REFER TO SHEET NO(S).
WINDOWS	FIXED	YKK AP AMERICA YOW 225 TUH	FL16314.5	METHOD 1, OPTION D	
SKYLIGHTS					
EXTERIOR DOORS	SWINGING EXTERIOR DOOR ASSEMBLIES	CURRIES DIV. OF AADG., INC. MODEL 707	FL8394.3	METHOD 1, OPTION A	
	ROLL-UP EXTERIOR DOOR ASSEMBLIES	OVERHEAD DOOR CORPORATION SERIES 625	FL15960.1	METHOD 1, OPTION D	
SHUTTERS					
ROOFING	MODIFIED BITUMEN ROOF SYSTEM	SIPLAST INC. YHS 50 TU	FL10342.1	METHOD 1, OPTION D	
	METAL ROOFING	UNITED STRUCTURES OF AMERICA, INC. SUPREME LOK PANEL	FL2774.3	METHOD 1, OPTION A	
PANEL WALLS	STOREFRONT	YKK AP AMERICA YHS 50 TU	FL14218.10 FL14218.11	METHOD 1, OPTION D	
STRUCTURAL COMPONENTS					
NEW & INNOVATIVE BUILDING ENVELOPE PRODUCTS (OTHER)					

GENERAL NOTES:

1. INCLUSION OF "APPROVED PRODUCTS" OR ASSOCIATED INFORMATION AND DOCUMENTATION ON THESE "PA" SHEETS OR BY REFERENCE IN THE CONSTRUCTION DOCUMENTS DOES NOT IMPLY THAT FLEISCHMANGARCIA OR ITS SUBCONSULTANTS HAVE EITHER PRODUCED OR CREATED THE INFORMATION CONTAINED HEREIN. CONSEQUENTLY, FLEISCHMANGARCIA AND ITS SUBCONSULTANTS ACCEPT NO RESPONSIBILITY FOR ANY INFORMATION GIVEN RELATIVE TO "APPROVED PRODUCTS."
2. RESPONSIBILITY FOR ANY PRODUCT'S PERFORMANCE RELATIVE TO STRUCTURAL INTEGRITY DURING HURRICANES BASED ON EVALUATIONS OF CODE COMPLIANCE CONDUCTED BY STATE APPROVED ENTITIES LIES SOLELY WITH THE MANUFACTURERS OF THE ABOVE LISTED PRODUCTS.
3. INCLUSION OF A PRODUCT IN THIS SCHEDULE DOES NOT IMPLY OR PRESUME THAT THE PRODUCT LISTED WILL BE INSTALLED IN THIS PROJECT. ALTERNATE PRODUCTS COMPLYING WITH CODE REQUIREMENTS MAY BE UTILIZED UPON EVALUATION, ACCEPTANCE, AND APPROVAL BY THE BUILDING DEPARTMENT. IT IS THE CONTRACTOR'S RESPONSIBILITY TO SUBMIT INFORMATION AND DOCUMENTATION THAT MAY BE REQUIRED BY THE BUILDING DEPARTMENT FOR THE ALTERNATE PRODUCT'S EVALUATION AND APPROVAL.
4. REFER TO PROJECT DATA ON SHEET NUMBER A0.1 FOR APPLICABLE WIND SPEED CLASSIFICATION OF PROJECT.

GENERAL PROJECT NOTES (A4, N/A)

1. THESE PROJECT NOTES APPLY ONLY TO ARCHITECTURAL SHEETS.
2. GENERAL NOTES ON ARCHITECTURAL SHEETS APPLY ONLY TO THE SHEET ON WHICH THEY APPEAR.
3. KEY NOTES ON ARCHITECTURAL SHEETS APPLY ONLY TO THE SHEET ON WHICH THEY APPEAR.
4. CENTER ANY INTERIOR OPENINGS (NOT LOCATED BY DIMENSION), THAT APPEAR TO BE CENTERED IN A WALL.
5. IF THE LOCATION OF ANY BUILDING ELEMENT IS NOT OBVIOUS OR CAN NOT BE DETERMINED BY DIMENSION, MATHEMATICS, OR AS NOTED ABOVE, CONTACT THE ARCHITECT.
6. DIMENSIONS TO NEW MASONRY WALLS ARE TO THE FACE OF MASONRY SUBSTRATE.
7. DIMENSIONS TO NEW EXTERIOR STUD WALLS ARE TO EXTERIOR FACE OF STUDS.
8. DIMENSIONS TO NEW INTERIOR STUD WALLS ARE TO FINISHED FACE OF THE WALL.
9. DIMENSIONS TO EXISTING WALLS ARE TO FINISHED FACE OF THE WALL.
10. CONTRACTOR TO FURNISH AND INSTALL CONCEALED WOOD BLOCKING (WITHIN WALLS) AS REQUIRED TO FIRMLY SECURE WALL-MOUNTED EQUIPMENT AND/OR ACCESSORIES. ALL WOOD BLOCKING IN CONTACT WITH MASONRY IS TO BE PRESSURE TREATED.
11. "FINISHED FLOOR" AS REFERRED TO THROUGHOUT THE ARCHITECTURAL DRAWINGS IS HEREBY DEFINED AS THE REQUIRED FLOOR FINISH, EXCEPT IN AREAS WHERE CARPETING IS INDICATED, IN WHICH CASE "FINISHED FLOOR" REFERS TO SUBSTRATE RECEIVING CARPET (E.G. CONCRETE SLAB, SHEATHING, ETC).
12. "FINISH SUBSTRATE" AS REFERRED TO THROUGHOUT ARCHITECTURAL DRAWINGS IS HEREBY DEFINED AS THE CONCRETE SLAB OR SHEATHING BENEATH THE REQUIRED FLOOR FINISH, EXCLUSIVE OF REQUIRED FINISH AND MORTAR OR ADHESIVE NECESSARY FOR APPLICATION OF FINISH.
13. HEIGHT DIMENSIONS ON INTERIOR ELEVATIONS ARE TO FINISHED FLOOR.
14. ANY DIMENSIONS OR TARGET ELEVATIONS REFERENCING "FINISHED FLOOR" OR "FINISH SUBSTRATE" REFER TO TOP OF THE FINISH OR SUBSTRATE.

ARCHITECTURAL SYMBOLS & IDENTIFICATION LEGEND (A1, N/A)

REVISION MARK

1 — REVISION CLOUD AND SYMBOL

NORTH ARROW / **TRUE NORTH ARROW**

TRUE NORTH
PLAN NORTH

SECTION CUT INDICATION

A6 / A6.1
DRAWING NUMBER (SHEET COORDINATE)
SHEET NUMBER WHERE DRAWING IS SHOWN
DOTS SIGNIFY EXTENT OF SECTION CUT

DETAIL INDICATION

A6 / A6.1
DRAWING NUMBER (SHEET COORDINATE)
EXTENT OF AREA DETAILED
SHEET NUMBER WHERE DRAWING IS SHOWN

KEYNOTE INDICATION

9 — KEYNOTE NUMBER

ELEVATION INDICATIONS

1, 2, 3, 4 — TRIANGLE(S) & IDENTIFIER(S) SHOWN INDICATE ELEVATIONS TO BE VIEWED WITHIN THE SAME DRAWING BORDER

A6 / A7.1 — TRIANGLE(S) & IDENTIFIER(S) SHOWN INDICATE ELEVATIONS TO BE VIEWED
DRAWING NUMBER (SHEET COORDINATE)
SHEET NUMBER WHERE DRAWING IS SHOWN

OPENING INDICATION & IDENTIFICATION

212 — OPENING NUMBER

WINDOW TYPE INDICATION & IDENTIFICATION

01 — WINDOW NUMBER

GLAZING INDICATION & IDENTIFICATION

A — GLAZING LETTER

ROOM IDENTIFICATION

MANAGER OFFICE — ROOM NAME
101 — ROOM NUMBER

WALL TYPE INDICATION

1A
WALL TYPE CODE
WALL HEIGHT CODE

FURNITURE AND/OR EQUIPMENT INDICATION

A14 — FURNITURE AND/OR EQUIPMENT NUMBER
"A_" SERIES = ITEMS FURNISHED & INSTALLED BY CONTRACTOR
"B_" SERIES = ITEMS FURNISHED BY OWNER & INSTALLED BY CONTRACTOR
"C_" SERIES = ITEMS FURNISHED & INSTALLED BY OWNER

MARKERBOARD/TACKBOARD INDICATION

M02
BOARD TYPE DESIGNATION "M" FOR MARKER BOARDS "T" FOR TACK BOARDS
BOARD TYPE NUMBER

LINE TYPE IDENTIFICATION

PROPERTY LINE
CENTER LINE
BREAK LINE
OVERHEAD (CEILING PLANE) ELEMENTS ON FLOOR PLANS
WALL CABS AND RODS (CLOTHES, SHOWER, ETC...) ON FLOOR PLANS AND HIDDEN LINES ON ALL DRAWINGS

ELEVATION TARGET INDICATORS

115'-0" SECOND FLOOR
ELEVATION OF TARGET (100'-0" EQUAL TO TOP OF FIRST FLOOR SLAB)
DESCRIPTION OF TARGET (REFERENCING FINISH SUBSTRATE)
12'-0" — HEIGHT OF CEILING OR SOFFIT
6" — CHANGE IN ELEVATION

SIGN INDICATION & IDENTIFICATION

A24
SPECIFIC DESIGN
GENERAL SIGN TYPE

SLOPE INDICATORS

1/4" / FT — SLOPE REQUIRED (ARROW POINTS DOWN SLOPE)
12 / 4 — SLOPE REQUIRED, INCHES PER 1'

ADDITIONAL SYMBOLS

± PLUS OR MINUS
Ø DIAMETER, ROUND
∠ ANGLE
℄ CENTER LINE

FleischmanGarcia
ARCHITECTURE • PLANNING • INTERIOR DESIGN
SAFETY HARBOR OFFICE
195 FOURTH AVENUE NORTH
SAFETY HARBOR, FLORIDA 34695
PHONE (727) 725-8880
FAX (727) 725-3900
TAMPA OFFICE
324 HYDE PARK AVENUE, SUITE 300
TAMPA, FLORIDA 33606
PHONE (813) 251-4400
FAX (813) 251-1994
SARASOTA OFFICE
5967 CATTLEMEN LANE, SUITE 6
SARASOTA, FLORIDA 34232
PHONE (941) 342-9293
FAX (941) 342-9253
REGISTRATION NUMBER AA C000123

NEW TAMPA RECREATION CENTER ADDITION

TAMPA, FL 33647

THIS DESIGN AND DRAWING IS THE SOLE PROPERTY OF FLEISCHMANGARCIA. NO PART OF THIS WORK MAY BE REPRODUCED WITHOUT PRIOR WRITTEN PERMISSION FROM FLEISCHMANGARCIA.

I CERTIFY TO THE BEST OF MY KNOWLEDGE THAT THESE DRAWINGS COMPLY W/ ALL RELEVANT BUILDING CODES

FGA PROJECT NUMBER 18015

ISSUE DATE 11/07/18

REVISIONS
1 DATE: -
2 DATE: -
3 DATE: -
4 DATE: -

SHEET NUMBER A0.0

11-28-18 Duane WrightP:\2018\18015_NTRC additon\Drawings\SHEETS\18015_A0.0.dwg

APPLICABLE CODES

BUILDING CODE:	FLORIDA BUILDING CODE 2017 (FBC 2017) - SIXTH EDITION
EXISTING CODE:	FBC 2017 - SIXTH EDITION
ACCESSIBILITY:	FBC 2017 - SIXTH EDITION
MECHANICAL CODE:	FBC 2017 - MECHANICAL
ELECTRICAL CODE:	FBC 2017 - CHAPTER 27; NFPA 70 (N.E.C.)
PLUMBING CODE:	FBC 2017 - PLUMBING
GAS FUEL CODE:	FBC 2017 - GAS FUEL
ENERGY CONSERVATION:	FBC 2017 - ENERGY
FIRE SAFETY CODE:	FLORIDA FIRE PREVENTION CODE - FIFTH EDITION (BASED ON NFPA 1, NFPA 101 & LIFE SAFETY CODE, 2012 EDITION)

BUILDING CATEGORIZATION & PHYSICAL PROPERTIES

OCCUPANCY CLASSIFICATION	FLORIDA BUILDING CODE	FLORIDA FIRE PREVENTION CODE
	CHAPTER 3, SECTION 302	NFPA 101, CHAPTER 6
	ASSEMBLY A- 3 / GYMNASIUM	ASSEMBLY
CONSTRUCTION TYPE	FLORIDA BUILDING CODE	FLORIDA FIRE PREVENTION CODE
	CHAPTER 6	NFPA-101-8.2.1.2
	II-B	PER FBC: II-B

WIND SPEED DESIGN CRITERION *ULTIMATE DESIGN WIND SPEED CLASSIFICATION EQUAL TO OR EXCEEDING 120 MPH QUALIFIES PROJECT FOR WIND BORNE DEBRIS REGION	FLORIDA BUILDING CODE	FLORIDA FIRE PREVENTION CODE	PROVIDED
	CHAPTER 16, SECTION 1609		
	VULT = 140-150-MPH (RISK CATEGORY III)	N/A	REFER TO "PA" DWGS

BUILDING PHYSICAL PROPERTIES	FLORIDA BUILDING CODE	FLORIDA FIRE PREVENTION CODE	PROVIDED
	SECTION 501		
MAXIMUM HEIGHT IN FEET	75' (TABLE 504.3)	N/A	NEW - 27' (EXIST - 33')
MAXIMUM NUMBER OF STORIES	3 (TABLE 504.4)	N/A	1
ALLOWABLE AREA PER FLOOR	38,000 SQ FT (TABLE 506.2)	N/A	7,476 SQ FT
SPRINKLER SYSTEM	NFPA 13	NFPA 13	YES

FIRE RATING REQUIREMENTS

BUILDING COMPONENTS	FLORIDA BUILDING CODE	NFPA 101 - LIFE SAFETY CODE	NFPA 220	PROVIDED
	TABLES 601, 602, & 1020.1	7.1.3.1 & 6.1.14.4.1	TABLE 4.1.1	
STRUCTURAL FRAME	0	0		0
BEARING WALLS - EXTERIOR	0	0		0
BEARING WALLS - INTERIOR	0	0		0
NON-BEARING WALLS - EXTERIOR	0	0		0
NON-BEARING WALLS - INTERIOR	0	0		0
FLOOR CONSTRUCTION	0	0		0
ROOF CONSTRUCTION	0	0		0
OCCUPANCY SEPARATION (SPRINKLERED)	N/A PER 302.3.1	N/A		N/A
CORRIDORS: GREATER THAN 30 OCCUPANTS	0	0 PER 12.3.6 (2)		0

OCCUPANT LOAD & EGRESS WIDTH CALCULATIONS

FLORIDA BUILDING CODE

ROOM NO	AREA NAME	AREA (SQ FT)	TABLE 1004.1.1 OCCUPANT USE	AREA PER OCCU-PANT (SQ FT)	OCCU-PANT LOAD	SECTION 1005.3.2 EGRESS WIDTH PER PERSON SERVED	REQ'D EGRESS WIDTH	EGRESS WIDTH PRO-VIDED
–	MULTI-PURPOSE A & B PRE-SCHOOL GYMNASIUM	3,691	ASSEMBLY A-3 / CONCENTRATED	7	511	0.2	30"	850"
–	TRAINING BOX	1,850	EXERCISE	50	37	0.2	30"	340"
	TOTALS				548			

EXITING REQUIREMENTS

EXITING COMPONENT	FLORIDA BUILDING CODE	NFPA 101 - LIFE SAFETY CODE	PROVIDED
COMMON PATH OF TRAVEL TO AN EXIT	75 FT [1006.2.1]	N/A	61'
MAXIMUM DEAD END CORRIDOR	20 FT [1020.4]	20 FT [12.2.5.1.3]	19'-4" FT
MAXIMUM TRAVEL DISTANCE TO EXIT	250 FT [TABLE 1017.2]	250 FT [12.2.6(1)]	154'
MINIMUM CORRIDOR WIDTH	44" [1020.2]	36" [7.3.4]	78"
MINIMUM CLEAR OPNG OF EXIT DOORS	32" [1010.1.1]	32" [7.2.1.2.4]	34"
MINIMUM STAIR WIDTH	N/A	N/A	N/A

FIRE EXTINGUISHER REQUIREMENTS

FIRE EXTINGUISHER COMPONENT	FLORIDA BUILDING CODE	FLORIDA FIRE PREVENTION CODE NFPA 10, TABLE 6.2.1.1 ORDINARY HAZARD OCCUPANCY	PROVIDED
MAXIMUM FLOOR AREA PER UNIT OF A	N/A	1500 SQ FT	935 SQ FT
MAXIMUM FLOOR AREA PER EXTINGUISHER	N/A	11,250 SQ FT	1,869 SQ FT
MAXIMUM TRAVEL DISTANCE	N/A	75 FT	70 FT

LIFE SAFETY AND BUILDING DATA A12 N/A

FIXTURE COUNTS - EXISTING: ASSEMBLY [TABLE 403.1] (EXERCISE) O.L. = 340 ASSUME: 170 M 170 F

WATER CLOSETS			LAVATORIES	DRINKING FOUNTAINS	SERVICE SINKS
MALE 1/125	FEMALE 1/65	UNISEX -	1/200	1/500	1 PER
REQ'D: 2 (1.36)	REQ'D: 3 (2.61)	REQ'D: X	REQ'D: 2	REQ'D: 1	REQ'D: 1

FIXTURE COUNTS - EXISTING: BUSINESS [TABLE 403.1] O.L. = 12 ASSUME: 8 M 9 F

WATER CLOSETS			LAVATORIES	DRINKING FOUNTAINS	SERVICE SINKS
MALE/FEMALE 1/25 FIRST 50, 1/50 REMAINDER 50			1/40 FIRST 80, 1/80 REMAINDER 80	1/100	1 PER
REQ'D: 1	REQ'D: 1	REQ'D: X	REQ'D: 2	REQ'D: 1	REQ'D: X

EXISTNG TOTAL FIXTURE COUNTS REQUIRED

MALE	FEMALE	UNISEX	LAVATORIES	DRINKING FOUNTAINS	SERVICE SINKS
REQ'D: 3	REQ'D: 4	REQ'D: X	REQ'D: 4	REQ'D: 2	REQ'D: 1

FIXTURE COUNTS - PROPOSED: ASSEMBLY [TABLE 403.1] O.L. = 511 ASSUME: 255 M 256 F

WATER CLOSETS			LAVATORIES	DRINKING FOUNTAINS	SERVICE SINKS
MALE 1/125	FEMALE 1/65	UNISEX -	1/200	1/500	1 PER
REQ'D: 2 (2.04)	REQ'D: 4 (3.92)	REQ'D: X	REQ'D: 3	REQ'D: 1 (1.02)	REQ'D: X

FIXTURE COUNTS - PROPOSED: ASSEMBLY [TABLE 403.1] (EXERCISE) O.L. = 37 ASSUME: 18 M 19 F

WATER CLOSETS			LAVATORIES	DRINKING FOUNTAINS	SERVICE SINKS
MALE 1/125	FEMALE 1/65	UNISEX -	1/200	1/500	1 PER
REQ'D: 1	REQ'D: 1	REQ'D: X	REQ'D: 2	REQ'D: 1	REQ'D: X

PROPOSED TOTAL FIXTURE COUNTS REQUIRED

MALE	FEMALE	UNISEX	LAVATORIES	DRINKING FOUNTAINS	SERVICE SINKS
REQ'D: 3	REQ'D: 5	REQ'D: X	REQ'D: 5	REQ'D: 2	REQ'D: 1

PLUMBING FIXTURE CALCULATIONS K9 N/A

TOTAL FIXTURE COUNTS REQUIRED (EXISTING & PROPOSED)

MALE	FEMALE	UNISEX	LAVATORIES	DRINKING FOUNTAINS	SERVICE SINKS
REQ'D: 6	REQ'D: 9	REQ'D: X	REQ'D: 9	REQ'D: 4	REQ'D: 1

TOTAL FIXTURE COUNTS PROVIDED (EXISTING & PROPOSED)

MALE	FEMALE	UNISEX	LAVATORIES	DRINKING FOUNTAINS	SERVICE SINKS
EXISTING: 2	EXISTING: 5	EXISTING: 8	EXISTING: 14	EXISTING: 6	EXISTING: 1
URINALS: 2					

150' TRAVEL DISTANCE — GRAPHIC ILLUSTRATION OF TRAVEL DISTANCE TO EXIT FROM REMOTE POINT

34"/170 — EXIT EGRESS CAPACITY: XX"/XXX = INCHES OF CLEAR EXIT WIDTH/EGRESS CAPACITY IN NUMBER OF PERSONS

FEC — FIRE EXTINGUISHER AND CABINET

FE — BRACKET MOUNTED FIRE EXTINGUISHER

SINGLE FACE LIGHTED EXIT SIGN (DIRECTIONAL ARROWS ON SIGN WHERE INDICATED ON PLAN)

DOUBLE FACE LIGHTED EXIT SIGN (DIRECTIONAL ARROWS ON SIGN WHERE INDICATED ON PLAN)

LIFE SAFETY SYMBOLS LEGEND L1 N/A

AREA CALCULATIONS

EXISTING GSF	19,121 SF
PROPOSED GSF	7,476 SF
TOTAL GSF	26,597 SF

AREA CALCULATIONS J1 N/A

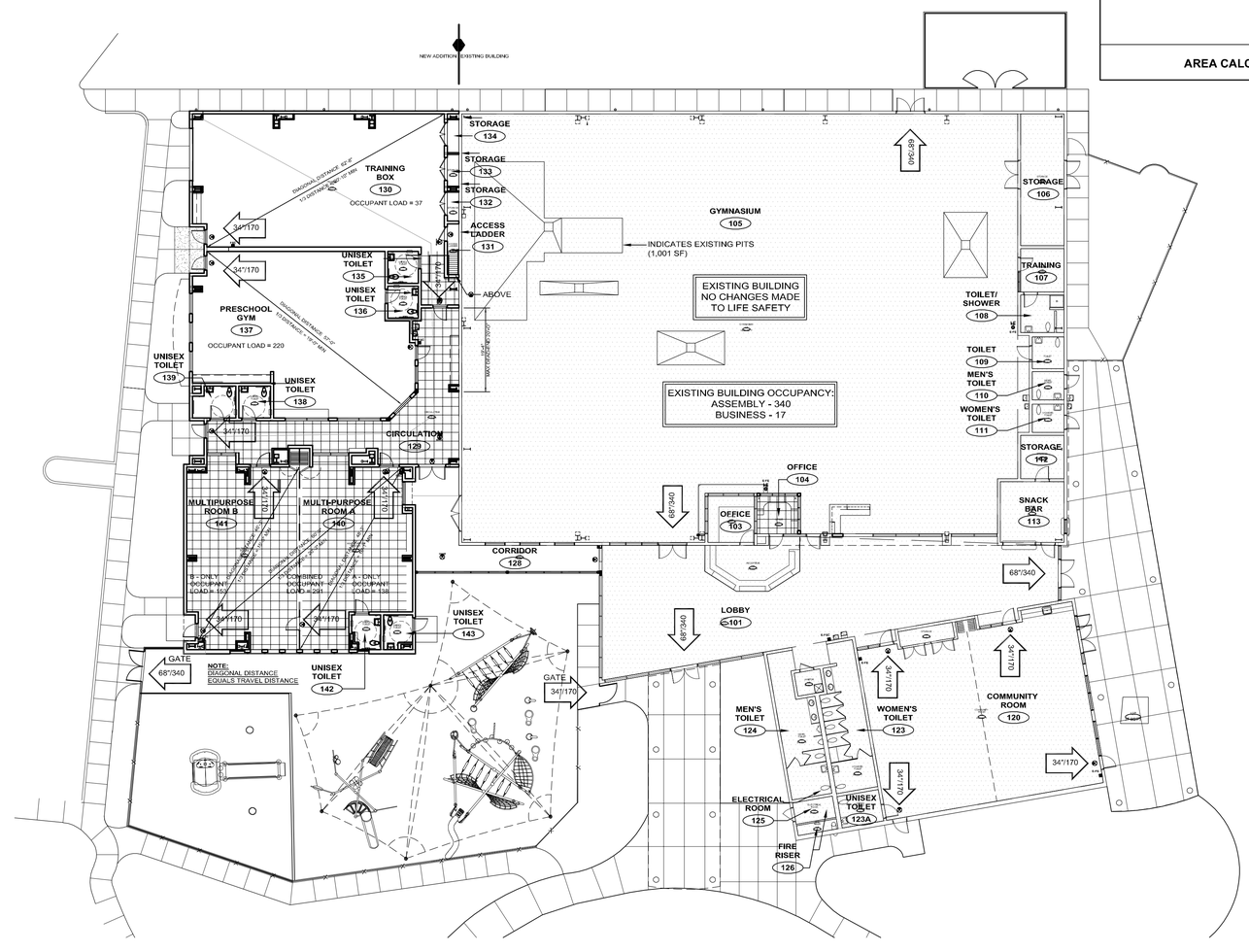

LIFE SAFETY PLAN A1 1/16"=1'-0"

FleischmanGarcia
ARCHITECTURE · PLANNING · INTERIOR DESIGN
SAFETY HARBOR OFFICE: 535 FOURTH AVENUE NORTH, SAFETY HARBOR, FLORIDA 34695, PHONE (727) 726-8880, FAX (727) 726-9066
TAMPA OFFICE: 3304 HYDE PARK AVENUE, SUITE 300, TAMPA, FLORIDA 33629, PHONE (813) 251-4400, FAX (813) 251-4488
ORLANDO OFFICE: 5967 CATALDA LANE, SUITE 6, ORLANDO, FLORIDA 32822, PHONE (941) 342-9253, FAX (941) 342-9253
REGISTRATION NUMBER AA C000123

NEW TAMPA RECREATION CENTER ADDITION

TAMPA, FL 33647

THE DESIGN AND DRAWING IS THE SOLE PROPERTY OF FLEISCHMAN/GARCIA. NO PART OF THIS DRAWING MAY BE REPRODUCED WITHOUT PRIOR WRITTEN CONSENT FROM FLEISCHMAN/GARCIA.

I CERTIFY TO THE BEST OF MY KNOWLEDGE THAT THESE DRAWINGS COMPLY WITH ALL RELEVANT BUILDING CODES

FGA PROJECT NUMBER 18015

ISSUE DATE 11/07/18

REVISIONS
1 DATE: -
2 DATE: -
3 DATE: -
4 DATE: -

SHEET NUMBER A0.1

Kathleen Pugh\\2018\18015_NTRC addition\Drawings\SHEETS\18015_A0.1.dwg
12-04-18

ARCHITECTURAL SITE PLAN NOTES

- SEE ARCHITECTURAL FLOOR PLANS FOR SIDEWALK ELEVATIONS ADJACENT TO BUILDING

EXISTING PARKING
GRASS PARKING
EXISTING DUMPSTER & ENCLOSURE
EXISTING TIMBER RETAINING WALLS
NEW ADDITION
EXISTING BUILDING
NEW WALK
EXIST
NEW DOWNSPOUTS, SEE CIVIL
EXISTING DOWNSPOUTS TO REMAIN, TYP.
EXISTING WALK TO REMAIN
NEW CHILLER PLATFORM WITH FENCE & GATE
NEW WALK
EXIST
EXISTING SKATE PARK
NEW SIDEWALK - SEE CIVIL
RELOCATED EXISTING GATES W/ NEW PANIC HARDWARE
EXISTING "FOREVER LAWN" REMOVED DUE TO ADDITION TO BE PLACED HERE - INSTALL NEW "FOREVER LAWN" TO COMPLETE AS REQUIRED
COORDINATE SLOPE WITH CIVIL
PROPERTY LINE - SEE CIVIL DRAWINGS
NEW FRENCH DRAIN W/ ADA COMPLIANT GRILL, SEE CIVIL
EXISTING PLAYGROUND EQUIPMENT TO REMAIN
RELOCATED EXISTING GATE W/ NEW PANIC HARDWARE
EXISTING ARTIFICIAL MULCH
NEW WALK
EXISTING FENCE & CURB TO REMAIN
NEW WALK TO BE ADA COMPLIANT OVER KNOLL
EXISTING CURB, FENCE, & ARTIFICIAL TURF TO REMAIN
NEW WALK
EXIST WALK
EXISTING PARKING
EXISTING PARKING
COMMERCE PARK BLVD
50'-0"
RELOCATE CURB, SEE CIVIL DRAWINGS
R102'-0"
0'-6"

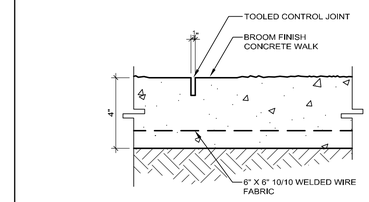

TYPICAL SIDWALK CONTROL JOINT DETAIL — L1 — 3"=1'-0"

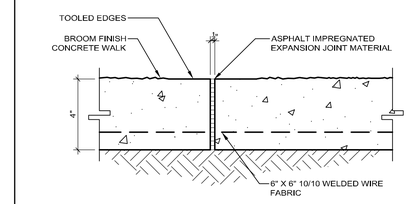

TYPICAL SIDWALK EXPANSION JOINT DETAIL — J1 — 3"=1'-0"

ARCHITECTURAL SITE PLAN — A1 — 1"=20'

FleischmanGarcia
ARCHITECTURE · PLANNING · INTERIOR DESIGN
SAINT PETERSBURG OFFICE
535 FOURTH AVENUE NORTH
SAINT PETERSBURG, FLORIDA 33701
PHONE (727) 725-0600
FAX (727) 725-0680
TAMPA OFFICE
324 HYDE PARK AVENUE, SUITE 300
TAMPA, FLORIDA 33606
PHONE (813) 275-1400
FAX (813) 275-1500
ORLANDO OFFICE
5967 CATTLEMEN LANE, SUITE 6
ORLANDO, FLORIDA 32835
PHONE (941) 342-2553
FAX (941) 342-2553
REGISTRATION NUMBER AA C000133

NEW TAMPA RECREATION CENTER ADDITION

TAMPA, FL 33647

THIS DESIGN AND DRAWING IS THE PROPERTY OF FLEISCHMANGARCIA, NO PART OF THIS DRAWING MAY BE REPRODUCED WITHOUT PRIOR WRITTEN PERMISSION FROM FLEISCHMANGARCIA

CERTIFY TO THE BEST OF MY KNOWLEDGE THESE DRAWINGS COMPLY W/ ALL RELEVANT BULDING CODES

FGA PROJECT NUMBER
18015

ISSUE DATE
11/07/18

REVISIONS
1 DATE: -
2 DATE: -
3 DATE: -
4 DATE: -

SHEET NUMBER
A1.1

Duane Wright P:\2018\18015_NTRC addition\Drawings\SHEETS\18015_A1.1.dwg
11-2-18

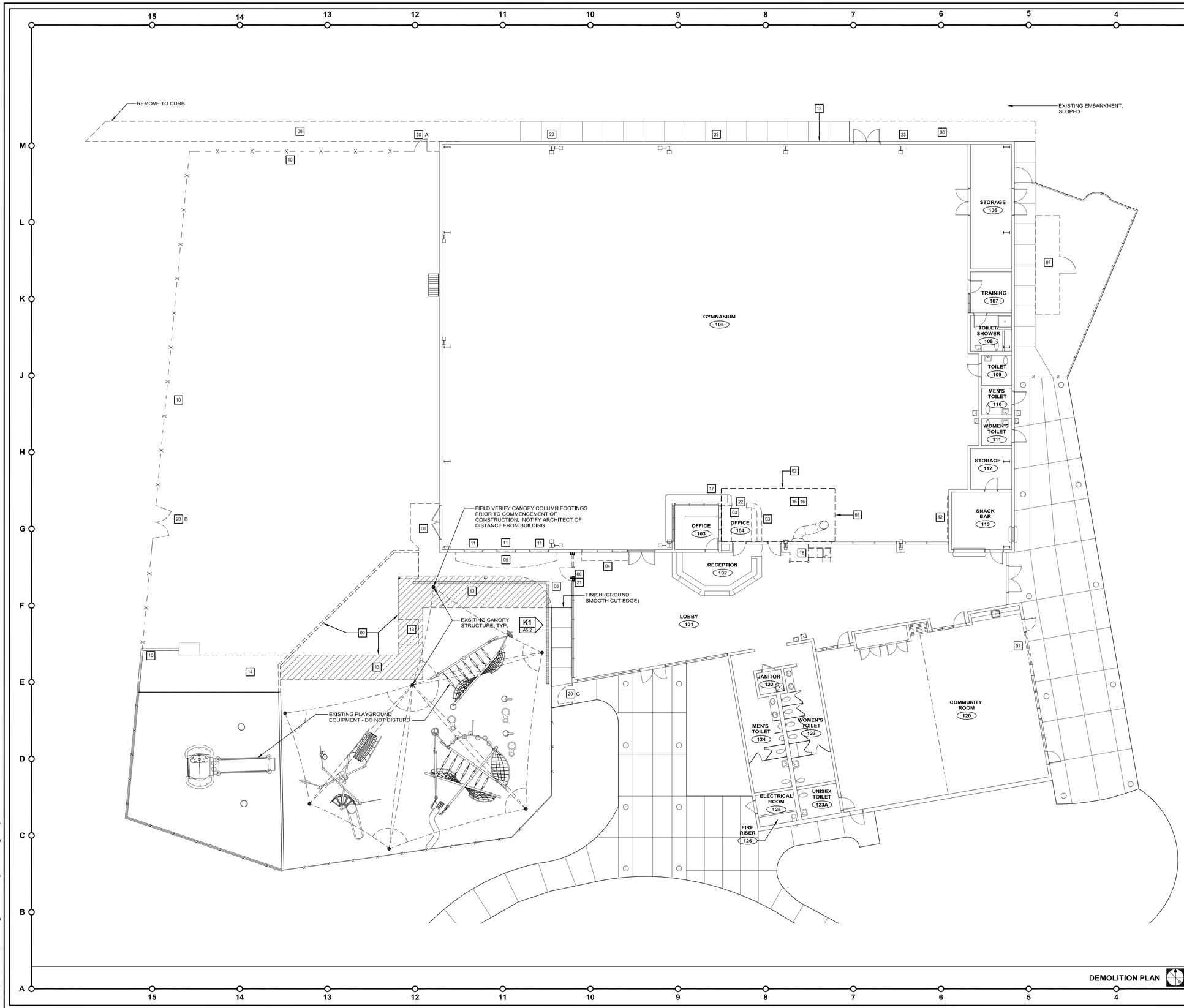

- SEE ARCHITECTURAL SITE PLAN A1.0 AND CIVIL DRAWINGS FOR ADDITIONAL SITE DEMOLITION ITEMS.
- SEE STRUCTURAL DRAWINGS FOR ADDITIONAL STRUCTURAL DEMOLITION ITEMS INCLUDING DEMOLITION OF EXISTING FLOOR SLAB REQUIRED TO INSTALL NEW FOOTINGS.
- SEE MECHANICAL DEMOLITION DRAWINGS FOR MECHANICAL DEMOLITION ITEMS.
- SEE PLUMBING DRAWINGS FOR PLUMBING DEMOLITION ITEMS.
- SEE ELECTRICAL DRAWINGS FOR ELECTRICAL DEMOLITION ITEMS.
- REFER TO ARCHITECTURAL WALL SECTIONS FOR ADDITIONAL DEMOLITION NOTES
- SEE A9.1 DRAWING FOR ROOF DEMOLITION ITEMS.
- THE CONTRACTOR SHALL PROTECT ALL EXISTING FLOORING WHICH IS TO REMAIN AND SUBJECT TO CONSTRUCTION TRAFFIC DURING DEMOLITION AND CONSTRUCTION

DEMOLITION GENERAL NOTES

L1 N/A

01 REMOVE EXISTING STOREFRONT DOOR AND WINDOWS. PATCH AND REPAIR WALLS AS NECESSARY FOR NEW DOUBLE STOREFRONT DOORS AND SIDELIGHTS.

02 CONSTRUCTION WITHIN THIS AREA SHALL OCCUR ONLY DURING NON-OCCUPIED HOURS. PROTECTED EGRESS THROUGH THIS AREA SHALL BE PROVIDED DURING ALL HOURS WHEN THE BUILDING IS OCCUPIED.

03 EXISTING CASEWORK AND FLOORING TO BE REMOVED.

04 EXISTING CUBBIES TO BE RELOCATED - COORDINATE NEW LOCATION WITH OWNER.

05 EXISTING METAL SOFFIT PANEL TO BE RELOCATED. SEE FLOOR PLAN AND ELEVATIONS FOR LOCATION. FILL HOLES TO MATCH EXISTING CMU

06 EXISTING DOOR AND CURTAIN WALL SYSTEM TO BE REMOVED - SEE DETAIL K1/A5.2. TAKE PRECAUTIONS NOT TO DAMAGE EXISTING FLOORING.

07 REMOVE SECTION OF FENCE INDICATED (TURN OVER TO OWNER). PATCH HOLES IN PAVEMENT AS REQURIED - MATCH EXISTING. (MECHANICAL EQUIPMENT TO BE REMOVED.)

08 REMOVE SECTION OF SIDEWALK AS INDICATED.

09 REMOVE ARTIFICIAL GRASS IN AREA INDICATED. RELOCATE AND REINSTALL AS SHOWN ON A1.0. - SEE NOTES #13 & #14

10 REMOVE FENCE AND GATES AND REINSTALL PORTIONS AS INDICATED ON OVERALL FLOOR PLAN. UNUSED FENCING TURNED OVER TO OWNER. RETAIN SIGNAGE TO BE PLACE ON "NEW" GATE.

11 UN-ASSEMBLE EXISTING STOREFRONT AS REQUIRED TO REMOVE FROSTED GLASS. REASSEMBLE STOREFRONT SYSTEM WITH NEW 1/4" CLEAR, TEMPERED GLASS. IF EXISTING STOREFRONT SYSTEM CAN'T BE MODIFIED THEN INSTALL NEW STOREFRONT WITH 1/4" CLEAR TEMPERED GLASS.

12 REMOVE AND RELOCATE EXISTING CLIMBING WALL PEGS. REINSTALL IN PRESCHOOL GYM. CONFIRM PEG LAYOUT WITH OWNER. PATCH AND REPAIR PEG HOLES AND PAINT TO MATCH ADJACENT WALLS.

13 ARTIFICIAL GRASS TO BE PULLED BACK AS NEEDED FOR NEW BUILDING CONSTRUCTION AND REINSTALLED.

14 EXCESS ARTIFICIAL GRASS TO BE RETAINED AND INSTALLED OVER EXISTING "GRASS" AREA PER MANUFACTURER INSTALLATION INSTRUCTIONS.

15 REMOVE EXISTING CONCRETE SLAB AS REQUIRED FOR NEW WALL CONSTRUCTION. SEE STRUCTURAL DRAWINGS. COORDINATE WITH OWNER THE REMOVAL OF ANY ADJACENT GYM FLOORING.

16 TRENCH EXISTING FLOORING AS REQUIRED TO RUN ELECTRICAL/DATA. PATCH AND REPAIR TO MATCH EXISTING UNLESS IT CAN BE RUN FROM ABOVE. SEE ELECTRICAL DRAWINGS.

17 PROTECT EXISTING CASEWORK DURING CONSTRUCTION

18 PLAY TUBE SLIDE TO BE REMOVED AND TURNED OVER TO OWNER. COORDINATE WITH OWNER EXTENT OF EXISTING GYM FLOORING TO BE REMOVED AND/OR STORED.

19 REMOVE EXISTING ISOLATION BOARD - GROUT FILL WITH NEW CEMENT. PROVIDE "WASH" SLOPING AWAY FROM BUILDING

20 EXISTING GATE
A) RETAIN, RELOCATE TO 20C/G01 LOCATION. RETAIN POST FOR MOUNTING. WIDTH LESS THAN EXISTING. RETAIN SIGNAGE
B) RETAIN GATE AND POST FOR MOUNTING TO G02 LOCATION. RETAIN SIGNAGE
C) RETAIN GATE AND POST, TURN OVER TO OWNER

21 REMOVE EXISTING (3) TRANSLUCENT PANELS AND MOUNTING BRACKETS, TURN OVER TO OWNER-WRAPPED

22 REMOVE EXISTING RETRACTABLE BARRICADE

23 REMOVE 1/2" EXPANSION JOINT MATERIAL. ADD BACKER ROD & SEALANT

DEMOLITION GENERAL NOTES

B1 N/A

- INDICATES EXISTING ITEMS TO BE REMOVED
- INDICATES EXISTING TO REMAIN

DEMOLITION PLAN A3 1/32"=1'

DEMOLITION WALL LEGEND A1 N/A

FleischmanGarcia
ARCHITECTURE · PLANNING · INTERIOR DESIGN
SAFETY HARBOR OFFICE
535 FOURTH AVENUE NORTH
SAFETY HARBOR, FLORIDA 34695
PHONE (727) 726-6880
FAX (727) 726-9066
ALBANY OFFICE
334 HYDE PARK AVENUE, SUITE 300
ALBANY, GEORGIA 31706
PHONE (912) 217-1460
FAX (912) 217-1464
TAMPA OFFICE
5967 CATALDEN LANE, SUITE 6
TAMPA, FLORIDA 33615
PHONE (813) 242-0253
FAX (813) 242-0253
REGISTRATION NUMBER AA C000123

NEW TAMPA RECREATION CENTER ADDITION

TAMPA, FL 33647

THE DESIGN AND DRAWING IS THE SOLE PROPERTY OF FLEISCHMAN/GARCIA, INC. NO PART THEREOF MAY BE REPRODUCED WITHOUT THE WRITTEN PERMISSION FROM FLEISCHMAN/GARCIA

I CERTIFY TO THE BEST OF MY KNOWLEDGE THAT THESE DRAWINGS COMPLY WITH ALL RELEVANT BUILDING CODES

FGA PROJECT NUMBER
18015

ISSUE DATE
11/07/18

REVISIONS
1 DATE: -
2 DATE: -
3 DATE: -
4 DATE: -

SHEET NUMBER
A2.1

12-04-18 Kathleen Pugh#:2018\18015_NTRC addition\Drawings\SHEETS\18015_A2.1.dwg

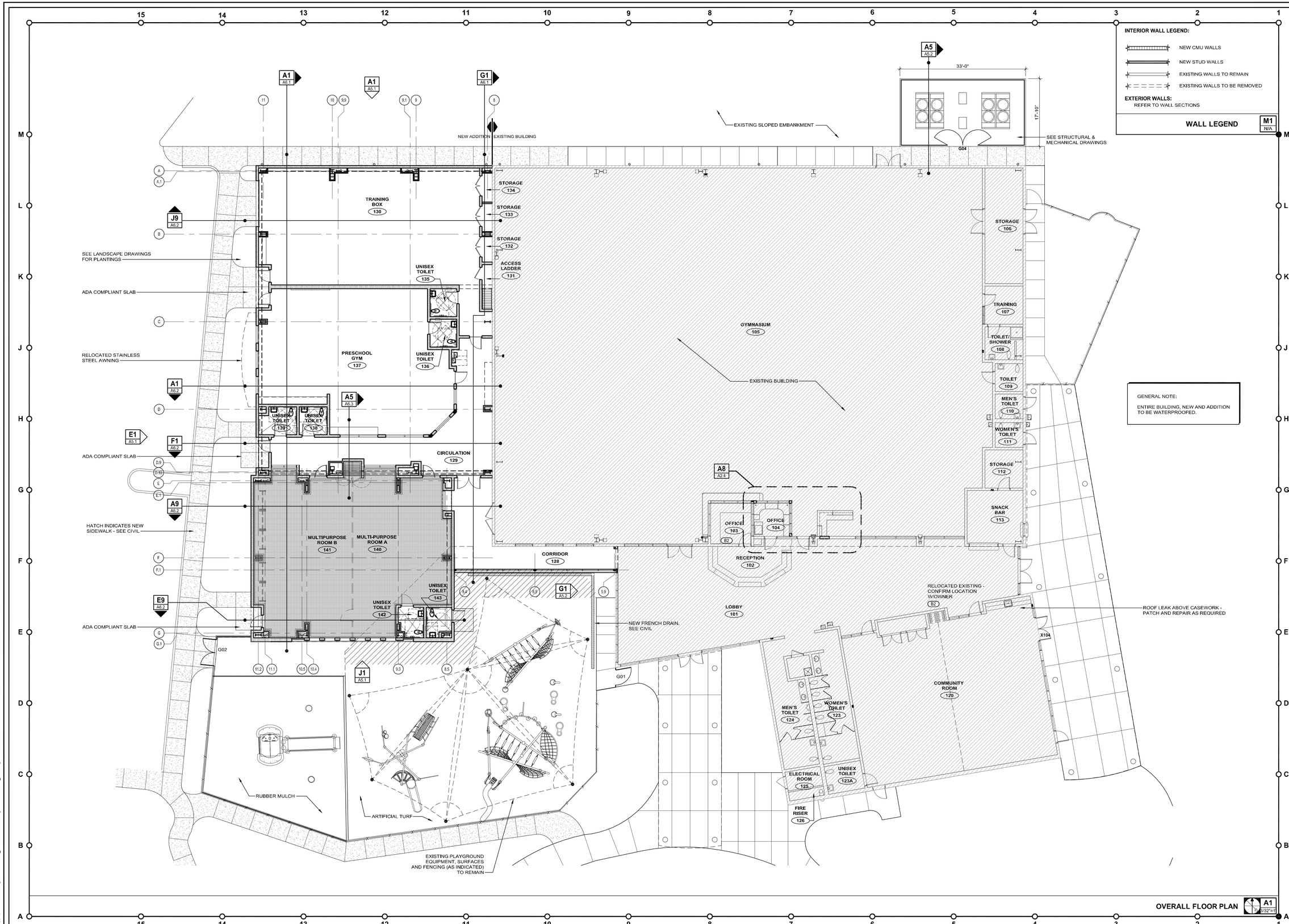

FleischmanGarcia

ARCHITECTURE · PLANNING · INTERIOR DESIGN

SAFETY HARBOR OFFICE
195 FOURTH AVENUE NORTH
SAFETY HARBOR, FLORIDA 34695
PHONE (727) 725-8880
FAX (727) 725-3900

TAMPA OFFICE
324 HYDE PARK AVENUE, SUITE 300
TAMPA, FLORIDA 33606
PHONE (813) 251-4400
FAX (813) 251-1994

SARASOTA OFFICE
5967 CATTLEMEN LANE, SUITE 6
SARASOTA, FLORIDA 34232
PHONE (941) 342-9293
FAX (941) 342-9253

REGISTRATION NUMBER AA C000123

NEW TAMPA RECREATION CENTER ADDITION

TAMPA, FL 33647

THIS DESIGN AND DRAWING IS THE SOLE PROPERTY OF FLEISCHMANGARCIA. NO PART OF THIS WORK MAY BE REPRODUCED WITHOUT PRIOR WRITTEN PERMISSION FROM FLEISCHMANGARCIA.

I CERTIFY TO THE BEST OF MY KNOWLEDGE THAT THESE DRAWINGS COMPLY W/ ALL RELEVANT BUILDING CODES

FGA PROJECT NUMBER
18015

ISSUE DATE
11/07/18

REVISIONS
1 DATE: -
2 DATE: -
3 DATE: -
4 DATE: -

SHEET NUMBER
A2.2

11-30-18 Duane Wright P:\2018\18015_NTRC addition\Drawings\SHEETS\18015_A2.2.dwg

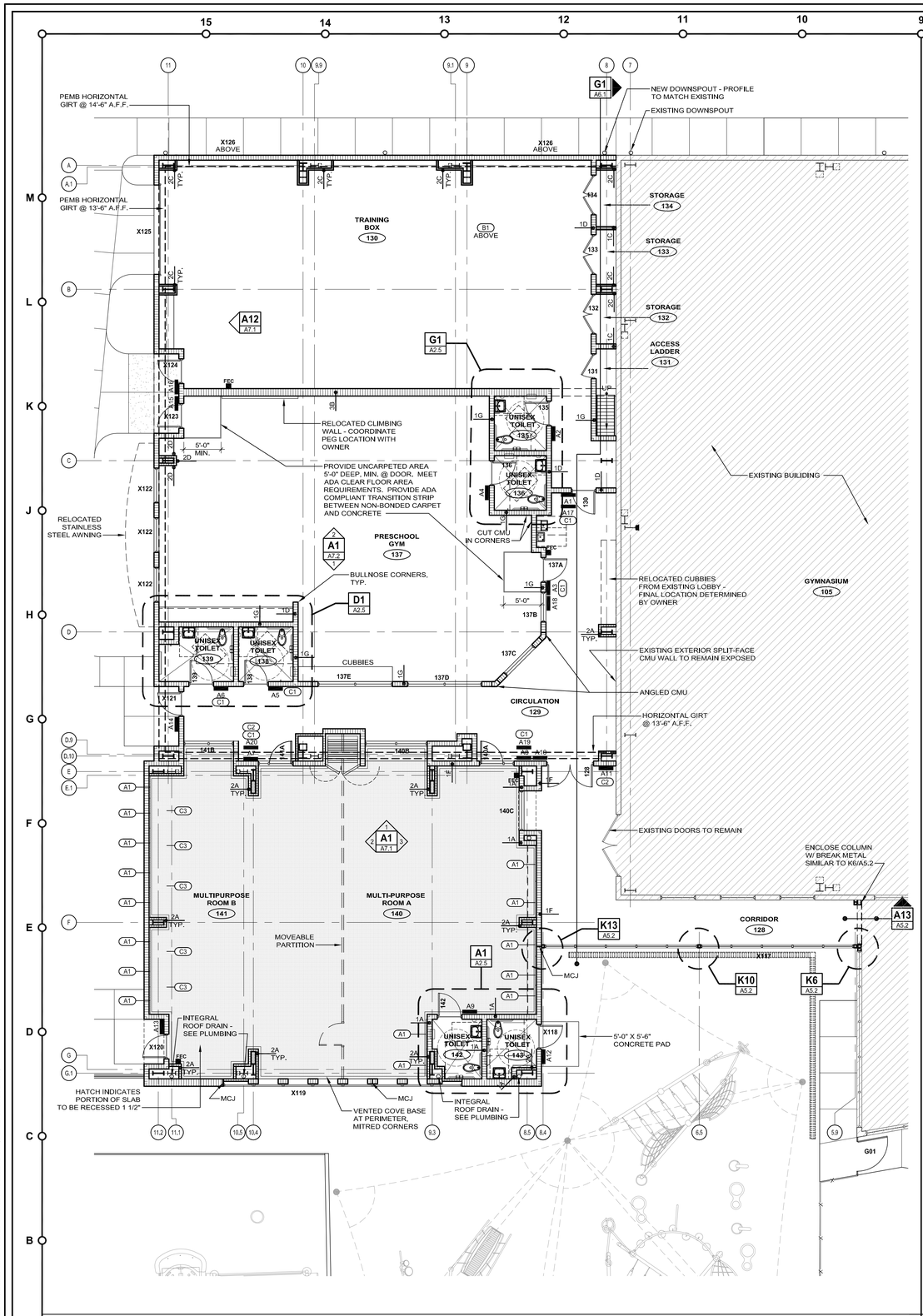

INFORMATION FLOOR PLAN A9 1/8"=1'

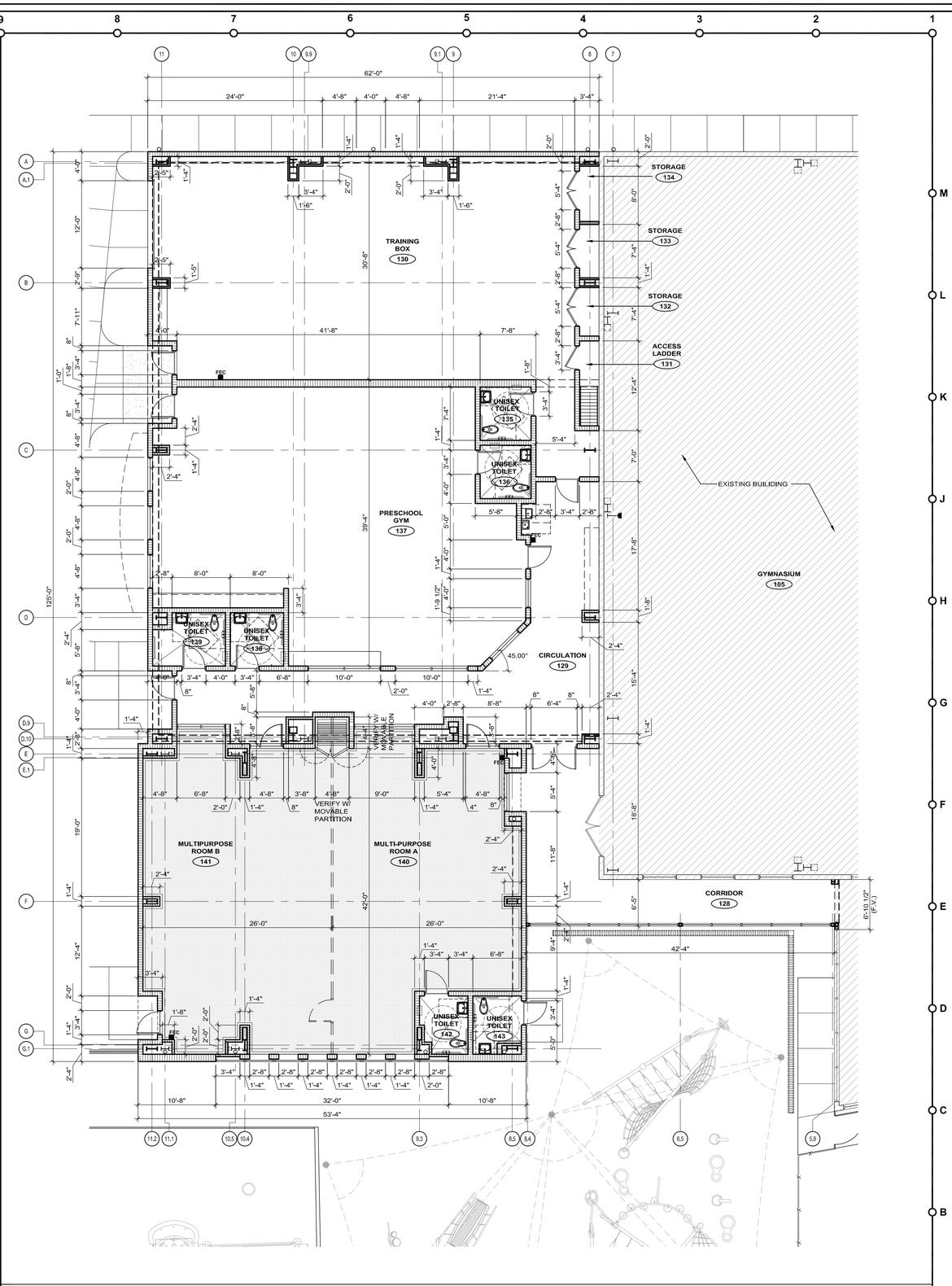

DIMENSION FLOOR PLAN A1 1/8"=1'

FleischmanGarcia
ARCHITECTURE · PLANNING · INTERIOR DESIGN
SAINT PETERSBURG, FLORIDA 33701 — 195 FOURTH AVENUE NORTH — PHONE (727) 822-4600 — FAX (727) 822-5885
TAMPA OFFICE — 5967 CATTLEMEN LANE, SUITE 6 — TAMPA, FLORIDA 33610 — PHONE (813) 242-0293 — FAX (813) 242-0253
324 HYDE PARK AVENUE, SUITE 300 — TAMPA, FLORIDA 33606 — PHONE (813) 251-4400 — FAX (813) 251-4401
REGISTRATION NUMBER AA C000123

NEW TAMPA RECREATION CENTER ADDITION

TAMPA, FL 33647

THE DESIGN AND DRAWING IS THE SOLE PROPERTY OF FLEISCHMANGARCIA. NO PART OF THIS WORK MAY BE REPRODUCED WITHOUT PRIOR WRITTEN PERMISSION FROM FLEISCHMANGARCIA.

I CERTIFY TO THE BEST OF MY KNOWLEDGE THAT THESE DRAWINGS COMPLY W/ ALL RELEVANT BUILDING CODES

FGA PROJECT NUMBER
18015

ISSUE DATE
11/07/18

REVISIONS
1 DATE: -
2 DATE: -
3 DATE: -
4 DATE: -

SHEET NUMBER
A2.3

12-03-18 Duane Wright/sabdeyservers1/Arch/2018/18015_NTRC addition/Drawings/SHEETS/18015_A2.3.dwg

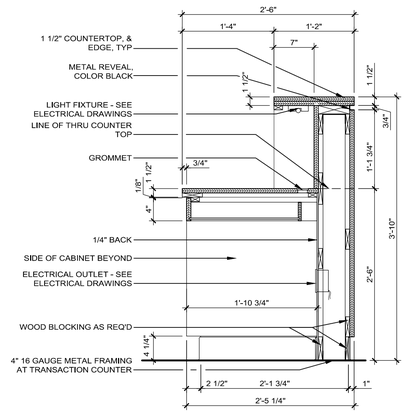

RECEPTION COUNTER CABINET SECTION — H12 (1"=1")

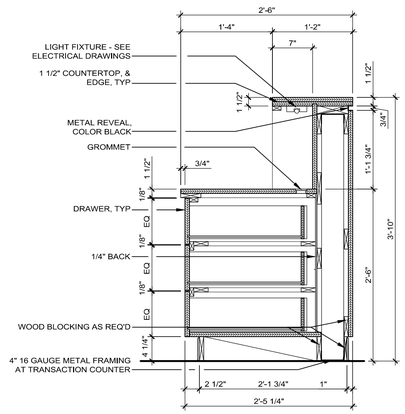

RECEPTION COUNTER CABINET SECTION — H8 (1"=1")

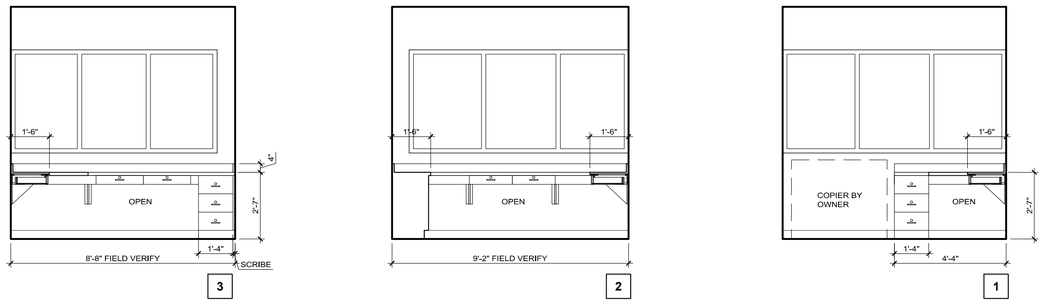

OFFICE 104 — E8 (3/8"=1')

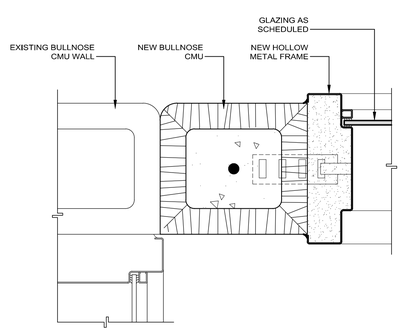

WALL ABUTTING/JAMB DETAIL — A13 (3"=1')

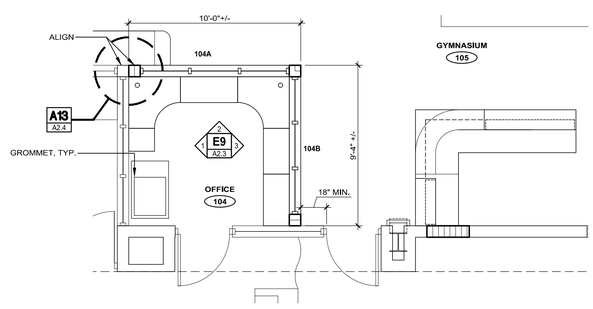

ENLARGED PLAN — A8 (1/4"=1')

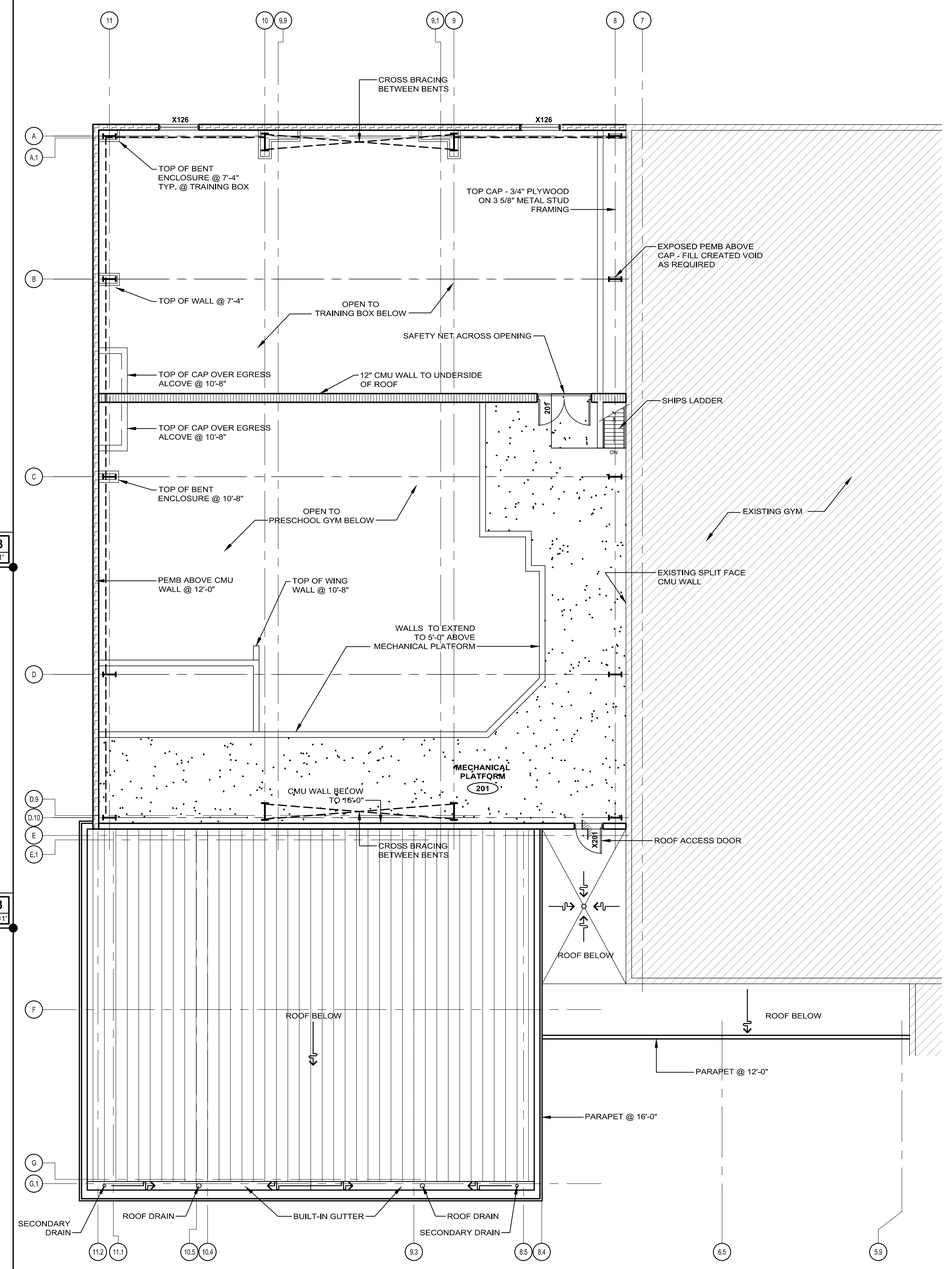

MECHANICAL PLATFORM FLOOR PLAN — A1 (1/8"=1')

FleischmanGarcia
ARCHITECTURE • PLANNING • INTERIOR DESIGN
SAFETY HARBOR OFFICE
1888 SEMINOLE BLVD, SUITE 300
SAFETY HARBOR, FLORIDA 34695
PHONE (727) 726-0800
FAX (727) 726-5908
TAMPA OFFICE
2630 FIFTH AVENUE SOUTH, SUITE 206
TAMPA, FLORIDA 33605
PHONE (813) 248-8887
FAX (813) 251-0984
SARASOTA OFFICE
2900 CLTY GATE DRIVE, SUITE A
SARASOTA, FLORIDA 34232
PHONE (941) 343-9276
FAX (941) 342-6233
REGISTRATION NUMBER AA C000123

NEW TAMPA RECREATION CENTER ADDITION

TAMPA, FL 33647

THE DESIGN AND DRAWING IS THE SOLE PROPERTY OF FLEISCHMAN/GARCIA, INC. AND MAY NOT BE REPRODUCED WITHOUT THE WRITTEN PERMISSION FROM FLEISCHMAN/GARCIA

I CERTIFY TO THE BEST OF MY KNOWLEDGE THAT THESE DRAWINGS COMPLY WITH RELEVANT BUILDING CODES

FGA PROJECT NUMBER
18015

ISSUE DATE
11/07/18

REVISIONS
1 DATE: -
2 DATE: -
3 DATE: -
4 DATE: -

SHEET NUMBER
A2.4

12-04-18 Duane Wright\safetyserver-1\Arch\2018\18015_KTRC addition\Drawings\SHEETS\18015_A2.4.dwg

ITEM	DESCRIPTION
DCS	DIAPER CHANGING STATION
GB36	GRAB BAR 36"
GB42	GRAB BAR 42"
MIR	MIRROR (18"X36")
PTD	PAPER TOWEL DISPENSER
RH	ROBE HOOK
SD	SOAP DISPENSER

ITEM	DESCRIPTION
SND	SANITARY NAPKIN DISPOSAL
PTWR	PAPER TOWEL / WASTE RECEPTACLE COMBO
TPD	TOILET PAPER DISPENSER
WR	WASTE RECEPTACLE

NOTES:

1. ALL TOILET ACCESSORIES ARE CONTRACTOR SUPPLIED AND CONTRACTOR INSTALLED OR OWNER/VENDOR INSTALLED AND OWNER/VENDOR SUPPLIED.
2. ALL TOILET ACCESSORIES WILL BE MOUNTED PER ADA RECOMMENDATIONS.

TOILET ACCESSORIES SCHEDULE L1 N/A

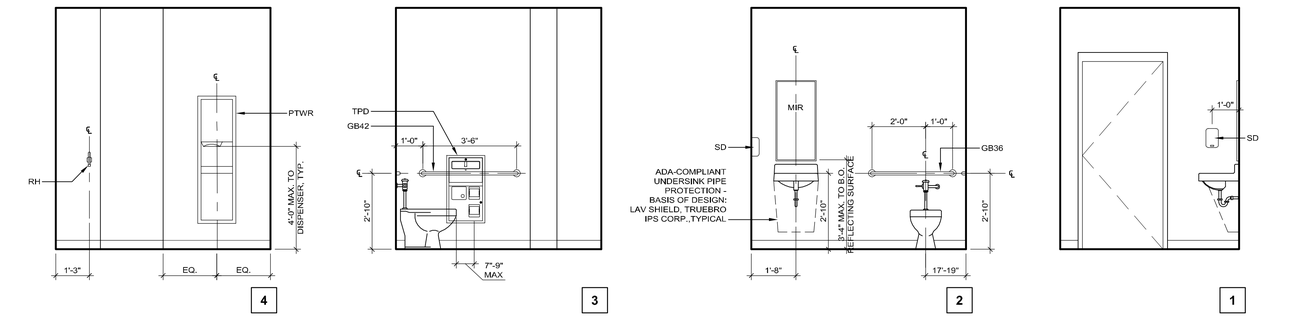

UNISEX TOILET 142 K7 3/8"=1'

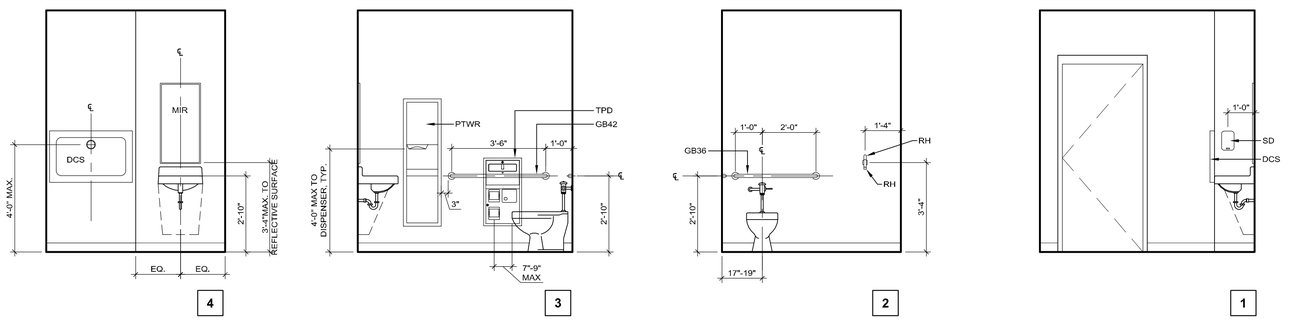

UNISEX TOILET 143 G7 3/8"=1'

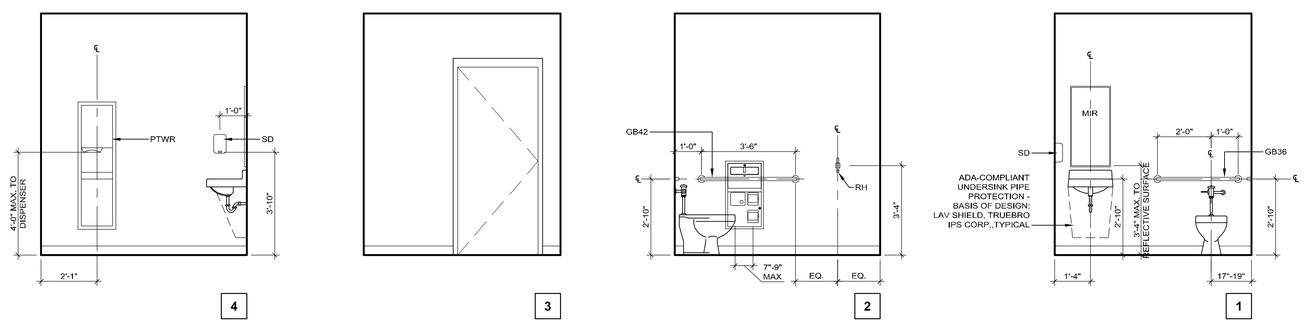

UNISEX TOILET 136, 138 SIM. (UNISEX TOILET 135 OPP. HAND) D7 3/8"=1'

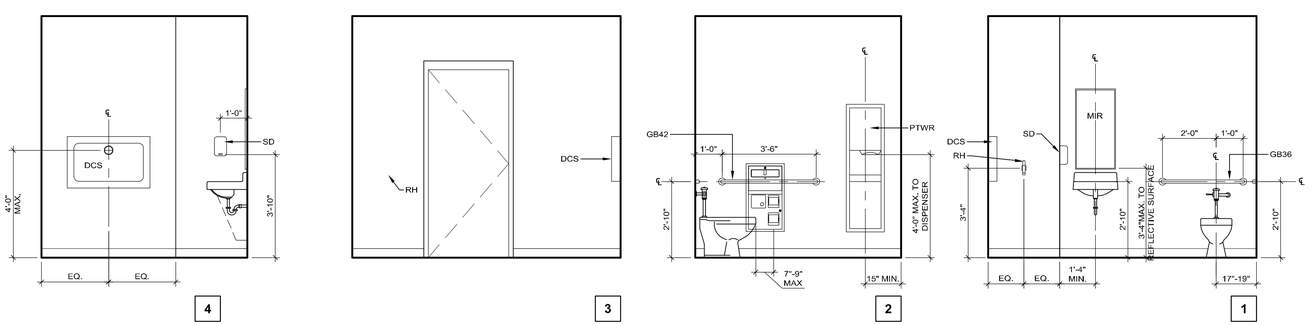

UNISEX TOILET 139 A7 3/8"=1'

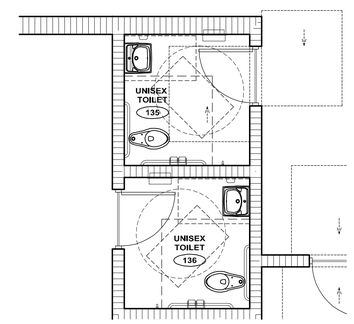

ENLARGED UNISEX TOILETS 135 & 136 - ADA CLEARANCES G4 1/4"=1'

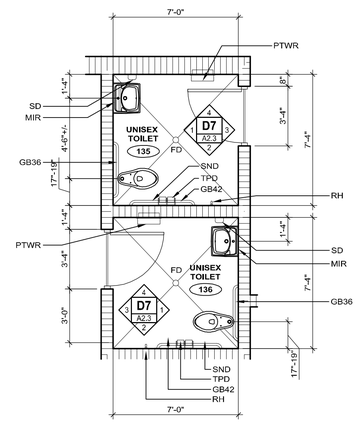

ENLARGED UNISEX TOILETS 135 & 136 G1 1/4"=1'

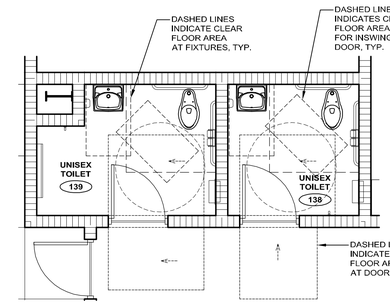

ENLARGED UNISEX TOILETS 138 & 139 - ADA CLEARANCES D4 1/4"=1'

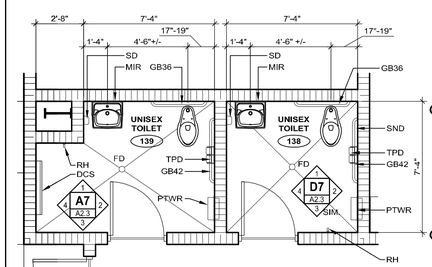

ENLARGED UNISEX TOILETS 138 & 139 D1 1/4"=1'

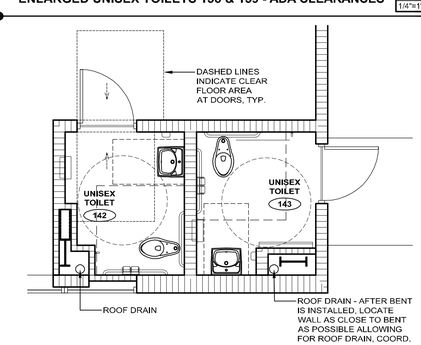

ENLARGED UNISEX TOILETS 142 & 143 - ADA CLEARANCES A4 1/4"=1'

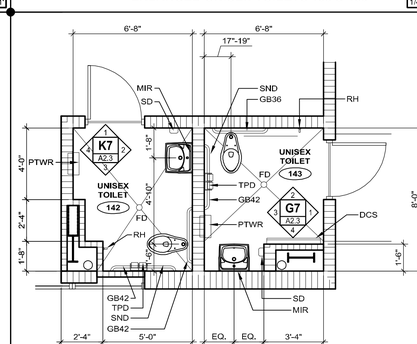

ENLARGED UNISEX TOILETS 142 & 143 A1 1/4"=1'

FleischmanGarcia
ARCHITECTURE · PLANNING · INTERIOR DESIGN
SAINT PETERSBURG OFFICE
195 FOURTH AVENUE NORTH
SAINT PETERSBURG, FLORIDA 33705
PHONE (727) 896-5300
FAX (727) 823-8080

TAMPA OFFICE
324 HYDE PARK AVENUE, SUITE 350
TAMPA, FLORIDA 33606
PHONE (813) 251-4460
FAX (813) 251-4466

ORLANDO OFFICE
5967 CATH LAKES LANE, SUITE 6
ORLANDO, FLORIDA 32822
PHONE (941) 342-6293
FAX (941) 342-6293

REGISTRATION NUMBER AA C000123

NEW TAMPA RECREATION CENTER ADDITION

TAMPA, FL 33647

THE DESIGN AND DRAWING IS THE SOLE PROPERTY OF FLEISCHMAN-GARCIA, NO PART OF THIS DESIGN MAY BE REPRODUCED WITHOUT WRITTEN PERMISSION FROM FLEISCHMAN-GARCIA

I CERTIFY TO THE BEST OF MY KNOWLEDGE THAT THESE DRAWINGS COMPLY WITH ALL RELEVANT BUILDING CODES

FGA PROJECT NUMBER
18015

ISSUE DATE
11/07/18

REVISIONS
1 DATE: -
2 DATE: -
3 DATE: -
4 DATE: -

SHEET NUMBER
A2.5

11-26-18 Duane Wright P:\2018\18015_NTRC addition\Drawings\SHEETS\18015_A2.5.dwg

LEGEND:

- (A_) ITEMS FURNISHED & INSTALLED BY GC
- (B_) ITEMS FURNISHED BY OWNER, INSTALLED BY GC
- (C_) ITEMS FURNISHED & INSTALLED BY OWNER

MARK	DESCRIPTION
A1	4' X 7' SECTION OF MIRROR - SECTIONS CUT SMALLER AS NEEDED
B1	BATTING CAGE
B2	"AED" AUTOMATED EXTERNAL DEFIBRILLATOR
C1	HAND SANITIZER DISPENSER
C2	24" X 24" WASTE RECEPTACLE
C3	PORTABLE BALLET BARRE

FURNITURE AND/OR EQUIPMENT SCHEDULE

K13 1/4"=1'

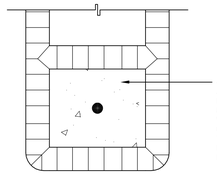

4" OR 8" BULLNOSED CMU AS SHOWN ON PLAN - DOUBLE BULLNOSE SHOWN. USE SINGLE RADIUS CMU WHERE ONLY ONE EDGE OF CMU IS EXPOSED. RADIUS TO BE CMU MFR'S STANDARD, REINFORCE & GROUT FILL PER STRUCTURAL DWGS.

TYPICAL CMU BULLNOSE DETAIL

L10 3"=1'

INTERIOR WALL LEGEND:

- NEW CMU WALLS
- EXISTING WALLS TO REMAIN
- EXISTING WALLS TO BE REMOVED

EXTERIOR WALLS:

REFER TO WALL SECTIONS

THE FOLLOWING DESIGNATION, WHEN INCLUDED WITHIN NEW WALLS, GRAPHICALLY INDICATE FIRE RATED WALLS WITH RATINGS AS LISTED BELOW:

- 1 HR FIRE RATING
- 2 HR FIRE RATING
- 3 HR FIRE RATING
- 4 HR FIRE RATING OR SMOKE BARRIER

WALL LEGEND

L8 N/A

A. DIMENSIONS LOCATING NEW EXTERIOR MASONRY WALLS ARE TO EXTERIOR FACE OF MASONRY SUBSTRATE.

A. DIMENSIONS LOCATING NEW EXTERIOR STUD WALLS ARE TO EXTERIOR FACE OF THE STUDS.

B. DIMENSIONS LOCATING NEW INTERIOR MASONRY WALLS ARE TO FACE OF MASONRY.

C. DIMENSIONS LOCATING NEW INTERIOR STUD WALLS ARE TO FINISHED WALL SURFACES.

D. DIMENSIONS TO EXISTING WALLS ARE TO THE FINISHED WALL SURFACES.

E. OPENINGS NOT LOCATED BY DIMENSION IN INTERIOR WALLS AND NOT ABUTTING ADJACENT WALLS ARE TO BE CENTERED ON THE WALL, UNLESS INDICATED OTHERWISE.

F. IF THE LOCATION OF ANY BUILDING ELEMENT IS NOT OBVIOUS OR CANNOT BE DETERMINED BY DIMENSION, MATHEMATICS, OR AS NOTED ABOVE, CONTACT THE ARCHITECT PRIOR TO LOCATING THE ELEMENT.

GENERAL DIMENSIONING NOTES

L6 N/A

FIRST FLOOR ROOMS

RM NO.	ROOM NAME	FLOOR	BASE	WALL	CEILING	CLG HT	REMARKS
101	LOBBY	EXSISTING TO REMAIN					
102	RECEPTION						
103	OFFICE						
104	OFFICE	VCT	RB	PNT	APC	10'-0"	
105	GYMNASIUM	EXSISTING TO REMAIN					
106	STORAGE						
107	TRAINING						
108	TOILET/ SHOWER						
109	TOILET						
110	MEN'S TOILET						
111	WOMEN'S TOILET						
112	STORAGE						
113	SNACK BAR						
120	COMMUNITY ROOM						
121	STORAGE						
122	JANITOR						
123	WOMEN'S TOILET						
123A	UNISEX TOILET						
124	MEN'S TOILET						
125	ELECTRICAL ROOM						
126	FIRE RISER						
127	NOT USED						
128	CORRIDOR	VCT	RB	PNT	ES/PNT	-	1, 5
129	CIRCULATION	VCT	RB	PNT	APC	9'-0"	1, 5
130	TRAINING BOX	IOT	RB	PNT	ES/PNT/APC	SEE RCP	2, 6
131	ACCESS LADDER	SC	NR	PNT	ES		
132	STORAGE	SC	RB	PNT	ES	8'-6"	5
133	STORAGE	SC	RB	PNT	ES	8'-6"	5
134	STORAGE	SC	RB	PNT	ES	8'-6"	5
135	UNISEX TOILET	RF	RF	PNT	PNT	8'-0"	
136	UNISEX TOILET	RF	RF	PNT	PNT	8'-0"	
137	PRESCHOOL GYM	IOT	RB	PNT	ES/PNT	ES	2, 3, 6
138	UNISEX TOILET	RF	RF	EP	PNT	8'-0"	
139	UNISEX TOILET	RF	RF	EP	PNT	8'-0"	
139	UNISEX TOILET	RF	RF	EP	PNT	9'-0"	
140	MULTI-PURPOSE ROOM A	DF	VCB	PNT	APC	12'-0"	2, 4, 7
141	MULTIPURPOSE ROOM B	DF	VCB	PNT	APC	12'-0"	2, 4, 7
142	UNISEX TOILET	RF	RF	EP	PNT	8'-0"	
143	UNISEX TOILET	RF	RF	EP	PNT	8'-0"	

REMARKS:

1. SEE A5/A3.1 FOR TILE PATTERN
2. CONCRETE TO BE SEALED BEFORE FLOORING IS PLACED
3. REMOVABLE CARPET BONDED FOAM, SIMILAR TO EXISTING GYM.
4. VENTED COVE BASE AS PROVIDE BY FLOOR MANUFACTURER
5. EXISTING EXTERIOR WALL THAT IS EXPOSED TO REMAIN AS IS, NO PAINT.
6. NEW EXTERIOR WALLS NOT TO BE PAINTED. CMU BANDING TO BE VISIBLE.
7. FLOORING TO BE HEAVY DUTY STUDIO DANCE FLOOR ON SSIV SUB FLOOR

ROOM FINISH SCHEDULE

G1 N/A

LEGEND:

APC	ACOUSTIC PANEL CEILING
DF	DANCE FLOORING
EP	EPOXY PAINT
ES	EXPOSED STRUCTURE
IOT	INDOOR/OUTDOOR TURF
NR	NONE REQUIRED
PNT	PAINT
RB	RUBBER BASE
RF	RESINOUS FLOORING
RSF	RUBBER SPORTS FLOORING
SC	SEALED CONCRETE
VCB	VENTED COVE BASE
VCT	VINYL COMPOSITION TILE (MATCH EXISTING)
WD	WOOD DANCE FLOORING

GENERAL FINISH NOTES:

A. REFER TO WALL LEGEND, PLANS &/OR SECTIONS FOR FINISH SUBSTRATE.

B. WHERE 2 OR MORE FINISHES ARE SCHEDULED, SEE FLOOR PLAN, REFLECTED CEILING PLAN, OR INTERIOR ELEVATIONS FOR EXTENTS.

C. WHERE 2 OR MORE CEILING HEIGHTS ARE SCHEDULED, SEE REFLECTED CEILING PLAN.

D. ONLY FINISH NON PRE-FINISHED ITEMS.

E. CEILING HEIGHTS INDICATE HEIGHT FROM FINISHED FLOOR.

F. ALL WALLS TO BE PAINTED. PRIOR TO PAINTING EXTERIOR WALLS, ARCHITECT TO APPROVE IF WALLS ARE ACCEPTABLE. CMU BANDING TO BE LEFT EXPOSED.

FLOORING PATTERN LEGEND:

- MATCH EXISTING "GREEN" RESILIENT FLOOR TILES
- MATCH EXISTING "TAN" RESILIENT FLOOR TILES
- MATCH EXISTING "RED" RESILIENT FLOOR TILES
- MATCH EXISTING "WHITE" RESILIENT FLOOR TILES

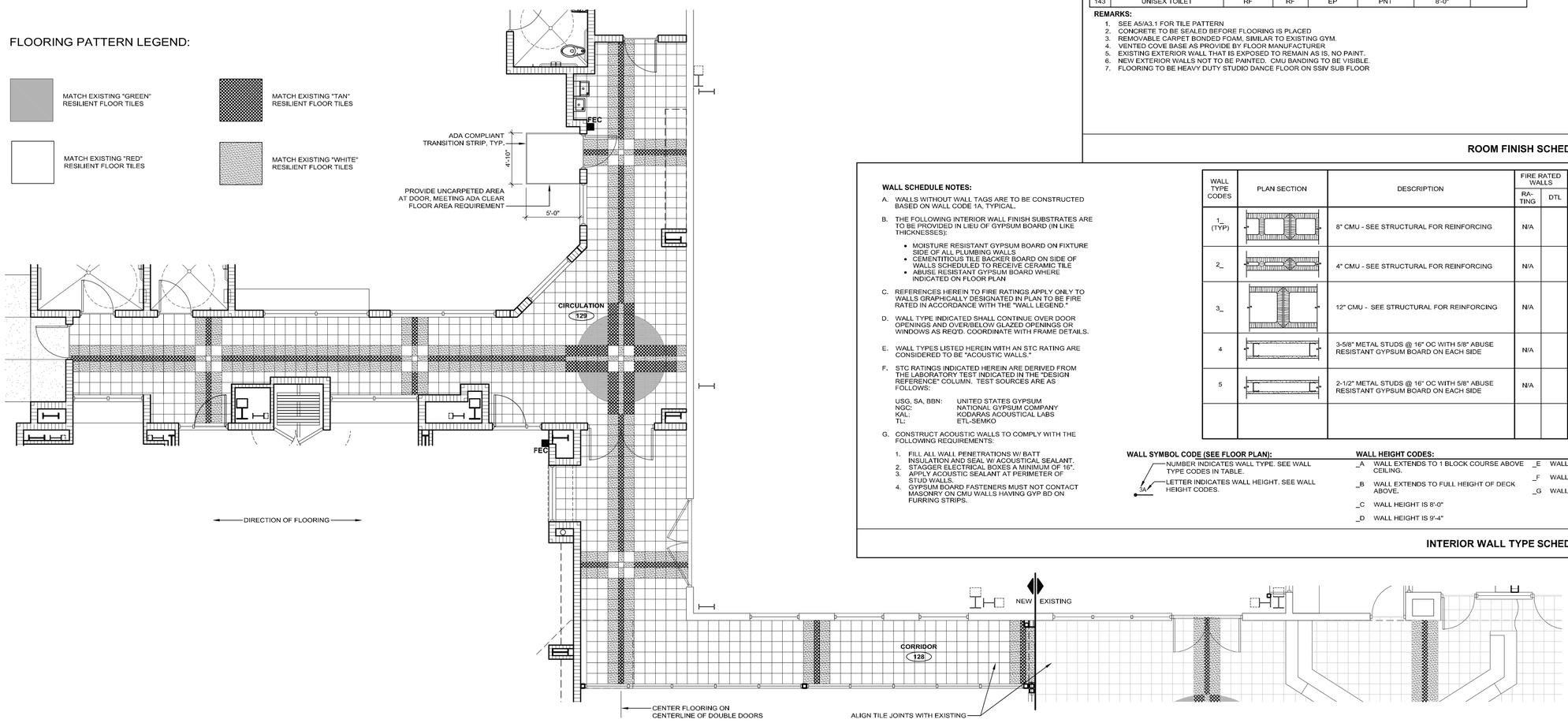

WALL SCHEDULE NOTES:

A. WALLS WITHOUT WALL TAGS ARE TO BE CONSTRUCTED BASED ON WALL CODE 1A, TYPICAL.

B. THE FOLLOWING INTERIOR WALL FINISH SUBSTRATES ARE TO BE PROVIDED IN LIEU OF GYPSUM BOARD (IN LIKE THICKNESSES):

- MOISTURE RESISTANT GYPSUM BOARD ON FIXTURE SIDE OF ALL PLUMBING WALLS
- CEMENTITIOUS TILE BACKER BOARD ON SIDE OF WALLS SCHEDULED TO RECEIVE CERAMIC TILE
- ABUSE RESISTANT GYPSUM BOARD WHERE INDICATED ON FLOOR PLAN

C. REFERENCES HEREIN TO FIRE RATINGS APPLY ONLY TO WALLS GRAPHICALLY DESIGNATED IN PLAN TO BE FIRE RATED IN ACCORDANCE WITH THE "WALL LEGEND."

D. WALL TYPE INDICATED SHALL CONTINUE OVER DOOR OPENINGS AND OVER/BELOW GLAZED OPENINGS OR WINDOWS AS REQ'D. COORDINATE WITH FRAME DETAILS.

E. WALL TYPES LISTED HEREIN WITH AN STC RATING ARE CONSIDERED TO BE "ACOUSTIC WALLS."

F. STC RATINGS INDICATED HEREIN ARE DERIVED FROM THE LABORATORY TEST INDICATED IN THE "DESIGN REFERENCE" COLUMN. TEST SOURCES ARE AS FOLLOWS:

USG, SA, BBN:	UNITED STATES GYPSUM
NGC:	NATIONAL GYPSUM COMPANY
KAL:	KODAR/AS ACOUSTICAL LABS
TL:	ETL-SEMKO

G. CONSTRUCT ACOUSTIC WALLS TO COMPLY WITH THE FOLLOWING REQUIREMENTS:

1. FILL ALL WALL PENETRATIONS W/ BATT INSULATION AND SEAL W/ ACOUSTICAL SEALANT.
2. STAGGER ELECTRICAL BOXES A MINIMUM OF 16".
3. APPLY ACOUSTIC SEALANT AT PERIMETER OF STUD WALLS.
4. GYPSUM BOARD FASTENERS MUST NOT CONTACT MASONRY ON CMU WALLS HAVING GYP BD ON FURRING STRIPS.

WALL TYPE CODES	PLAN SECTION	DESCRIPTION	FIRE RATED WALLS: RATING	FIRE RATED WALLS: DTL	ACOUSTIC WALLS: STC	ACOUSTIC WALLS: DESIGN REFERENCE
1_ (TYP)		8" CMU - SEE STRUCTURAL FOR REINFORCING	N/A			
2_		4" CMU - SEE STRUCTURAL FOR REINFORCING	N/A			
3_		12" CMU - SEE STRUCTURAL FOR REINFORCING	N/A			
4		3-5/8" METAL STUDS @ 16" OC WITH 5/8" ABUSE RESISTANT GYPSUM BOARD ON EACH SIDE	N/A			
5		2-1/2" METAL STUDS @ 16" OC WITH 5/8" ABUSE RESISTANT GYPSUM BOARD ON EACH SIDE	N/A			

WALL SYMBOL CODE (SEE FLOOR PLAN):

- NUMBER INDICATES WALL TYPE. SEE WALL TYPE CODES IN TABLE.
- LETTER INDICATES WALL HEIGHT. SEE WALL HEIGHT CODES.

WALL HEIGHT CODES:

- _A WALL EXTENDS TO 1 BLOCK COURSE ABOVE CEILING.
- _B WALL EXTENDS TO FULL HEIGHT OF DECK ABOVE.
- _C WALL HEIGHT IS 8'-0"
- _D WALL HEIGHT IS 9'-4"
- _E WALL HEIGHT IS 10'-4"
- _F WALL HEIGHT IS 16'-0"
- _G WALL HEIGHT IS 17'-0"

INTERIOR WALL TYPE SCHEDULE

C1 N/A

FLOORING TILE PATTERN

A1 3/16"=1'

FleischmanGarcia
ARCHITECTURE · PLANNING · INTERIOR DESIGN
SAFETY HARBOR OFFICE
1915 SOUTH AVENUE NORTH
SAFETY HARBOR, FLORIDA 34695
PHONE:(727) 726-5800
FAX:(727) 726-5900
TAMPA OFFICE
324 HYDE PARK AVENUE, SUITE 350
TAMPA, FLORIDA 33606
PHONE:(813) 251-4460
FAX:(813) 251-4466
ORLANDO OFFICE
5967 CATH DRIVE, SUITE 6
ORLANDO, FLORIDA 32822
PHONE:(941) 342-0293
FAX:(941) 342-0253
REGISTRATION NUMBER AA C000123

NEW TAMPA RECREATION CENTER ADDITION

TAMPA, FL 33647

THIS DESIGN AND DRAWING IS THE SOLE PROPERTY OF FLEISCHMAN/GARCIA, INC. AND SHALL NOT BE REPRODUCED WITHOUT PRIOR WRITTEN CONSENT FROM FLEISCHMAN/GARCIA

I CERTIFY TO THE BEST OF MY KNOWLEDGE THAT THESE DRAWINGS COMPLY W/ ALL RELEVANT BUILDING CODES

FGA PROJECT NUMBER
18015

ISSUE DATE
11/07/18

REVISIONS
1 DATE: -
2 DATE: -
3 DATE: -
4 DATE: -

SHEET NUMBER
A3.1

Duane Wright P:\2018\18015_NTRC addition\Drawings\SHEETS\18015_A3.1.dwg
11-28-18

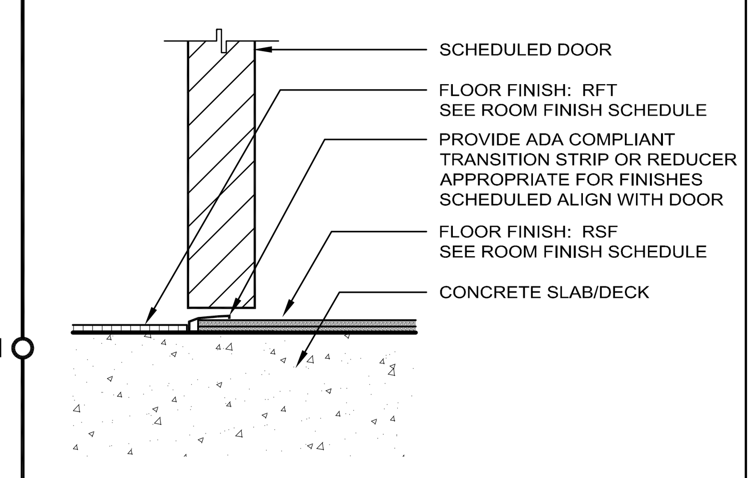

THRESHOLD DETAIL L14 3"=1'

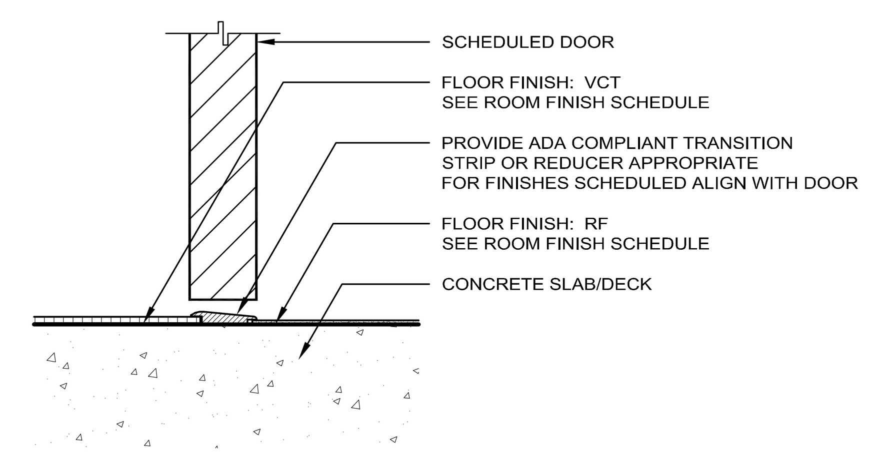

THRESHOLD DETAIL L11 3"=1'

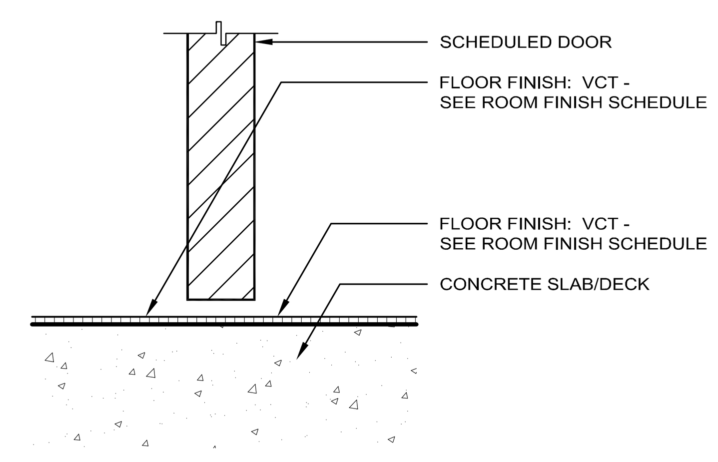

THRESHOLD DETAIL L8 3"=1'

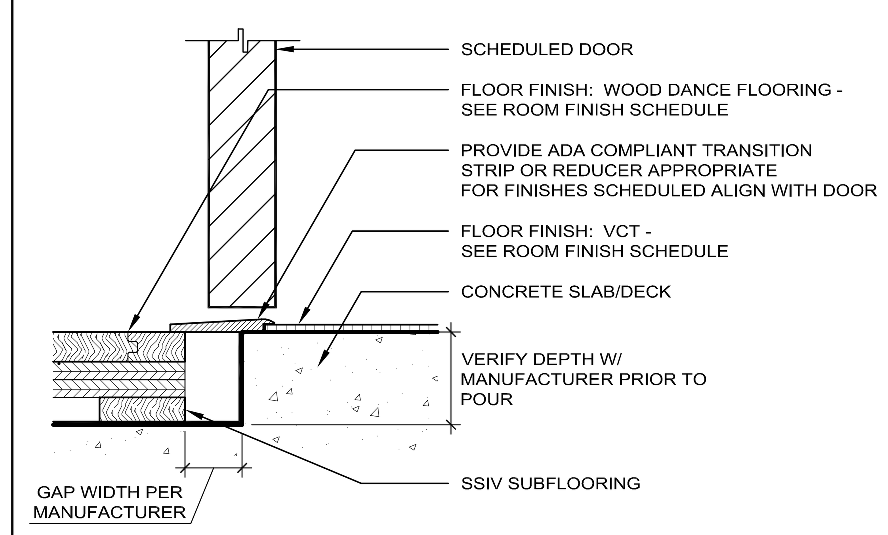

THRESHOLD DETAIL L5 3"=1'

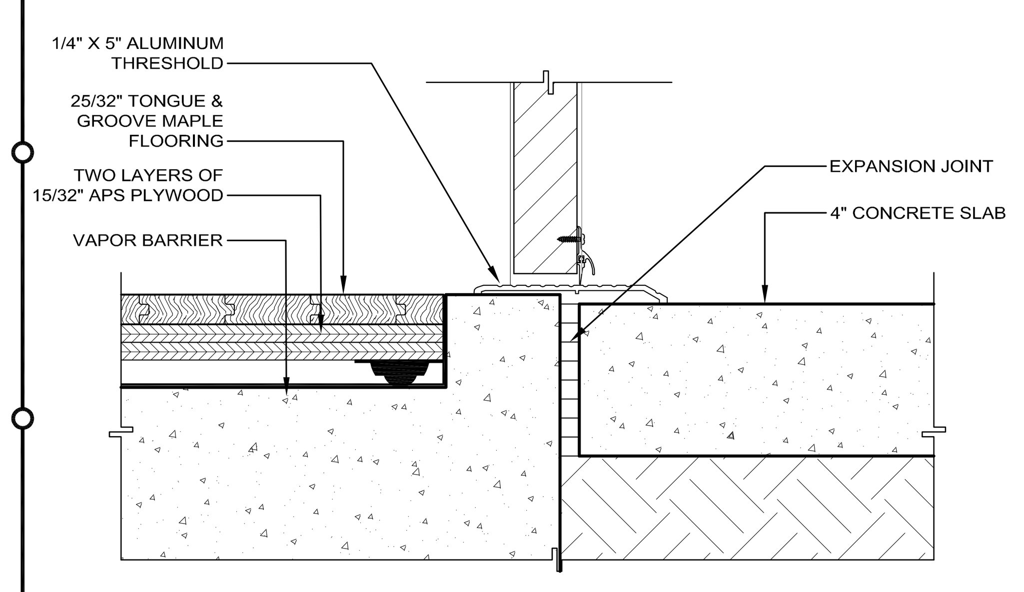

DANCE FLOOR THRESHOLD AT EXTERIOR DETAIL J13 3"=1'

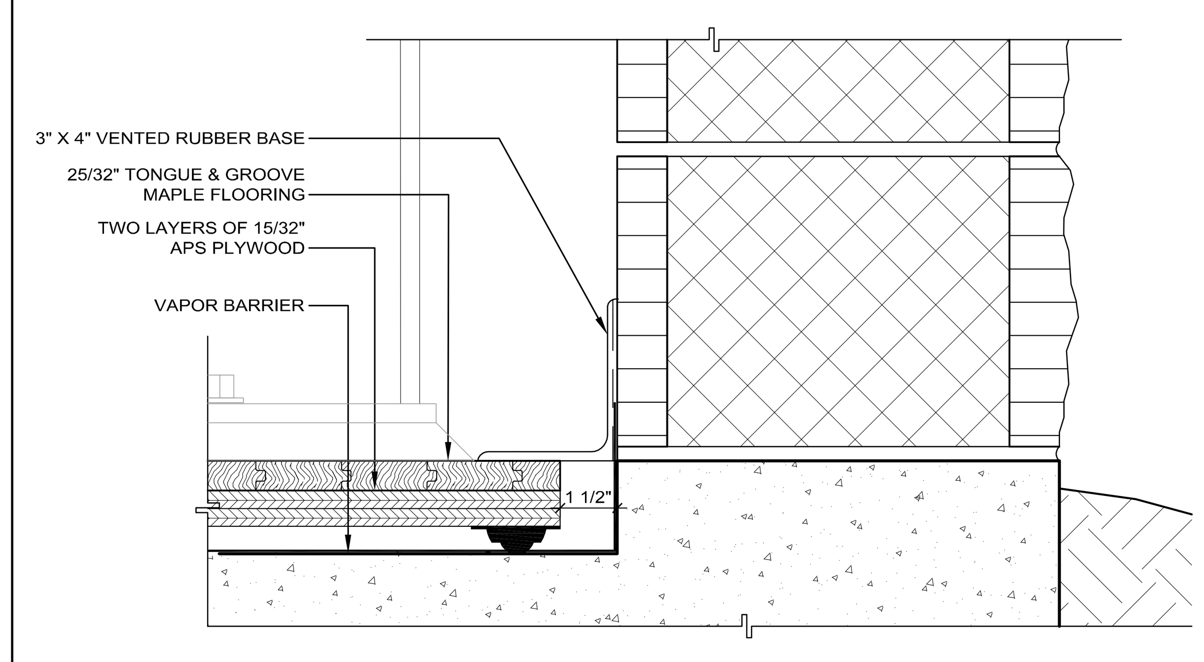

ATHLETIC FLOOR EDGE DETAIL J9 3"=1'

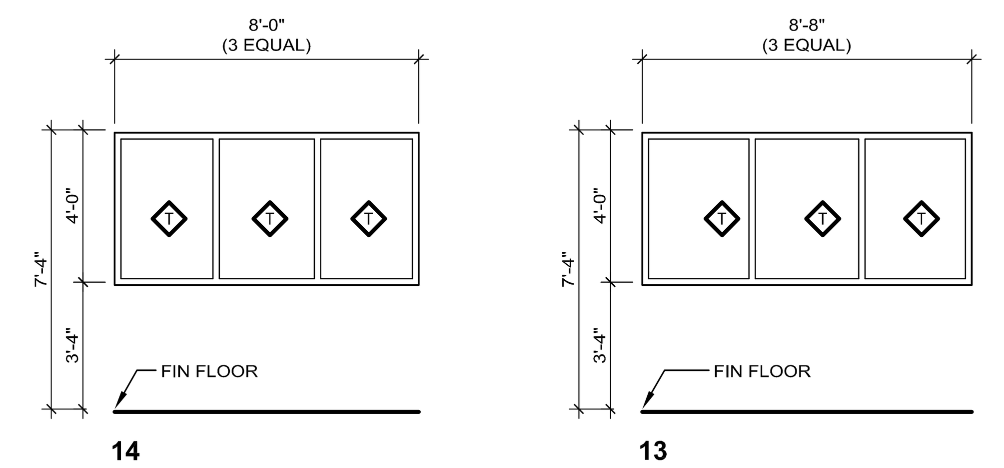

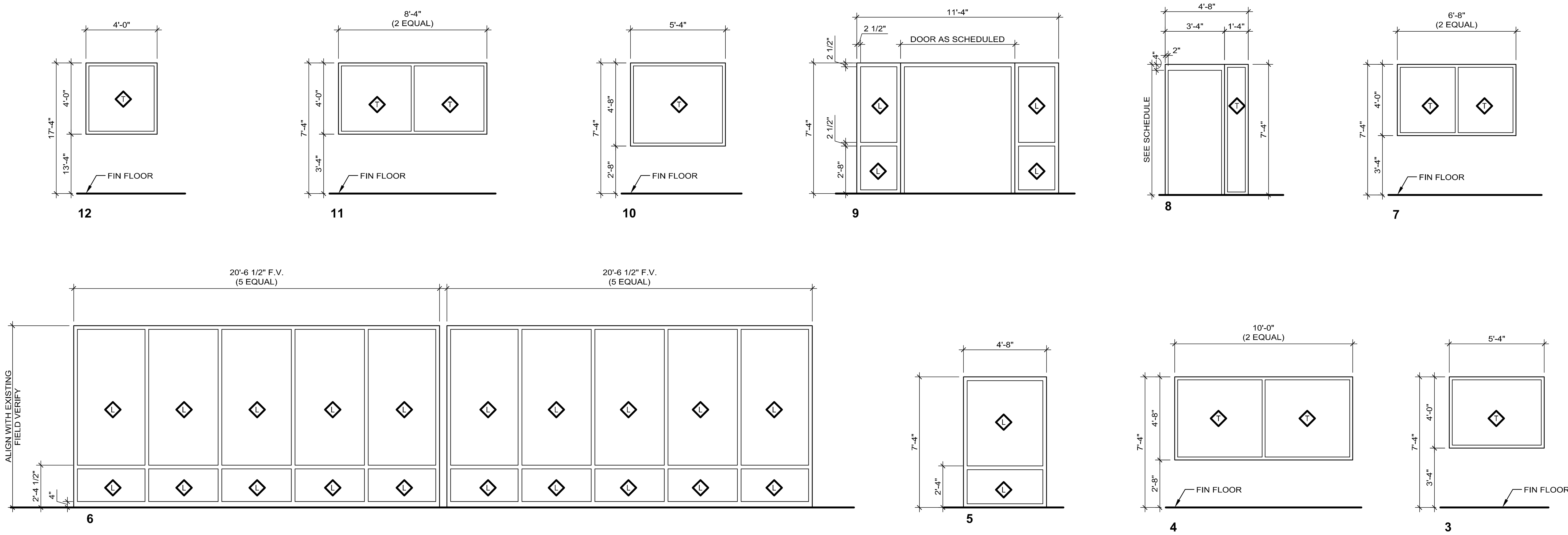

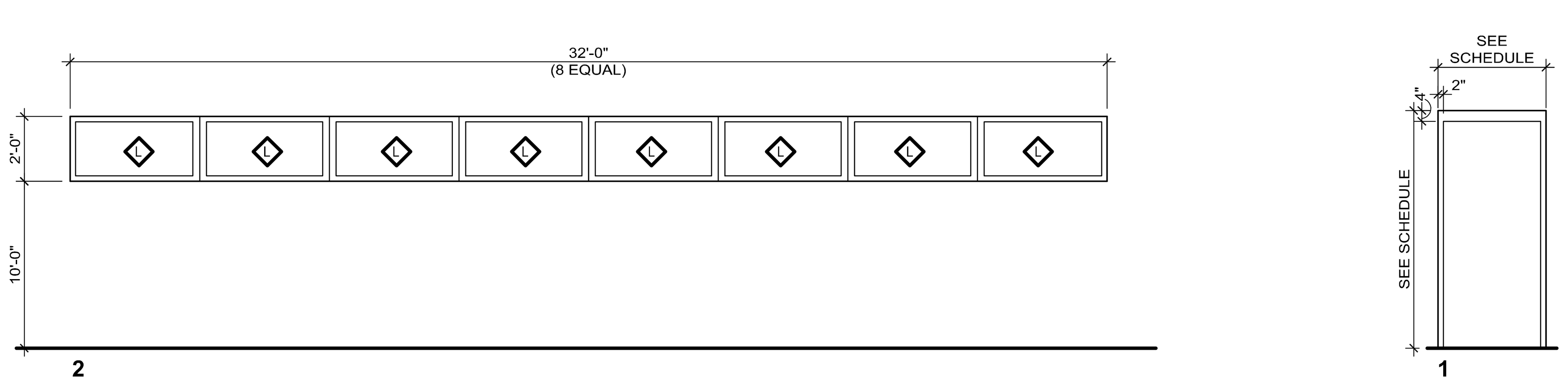

FRAME TYPES A9 NTS

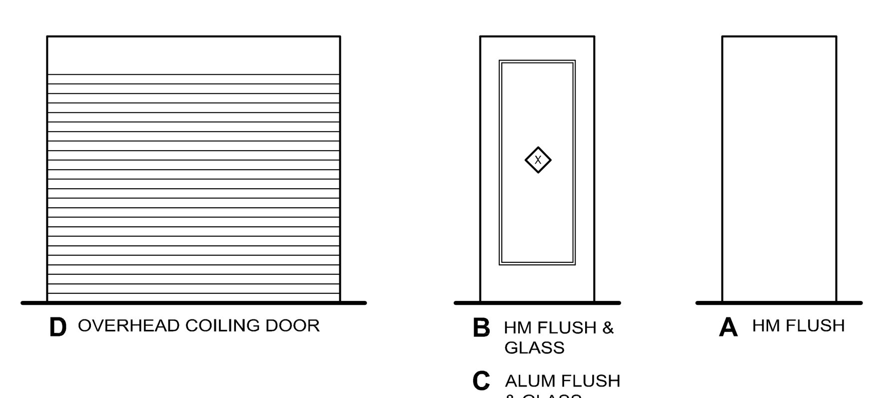

DOOR TYPES A5 NTS

MARK	MIN TH	DESCRIPTION
L	9/16" MIN.	LAMINATED IMPACT GLASS, REFLECTIVE (VS 3-20)
T	1/4" MIN.	CLEAR TEMPERED GLASS

GLAZING SCHEDULE M1 N/A

FIRST FLOOR EXTERIOR OPENINGS

OPNG NO	FIRE RATING	HDW	DOOR TYPE	DOOR WIDTH	DOOR HEIGHT	FRAME TYPE	FRAME MAT'L	JAMB	HEAD	SILL	MUL	THR	REMARKS
X104			C	PR. 3'-0"	7'-0"	9	ALUM						DOOR 120 AT EXISTING COMMUNITY ROOM 120 ON SHEET A2.2
X117						6	ALUM	K13 (A5.2) K6 (A5.2)	A1 (A9.2)	A7 (A4.2)			
X118			A	3'-0"	7'-0"	1	HM	A1 (A4.2) A1 (A4.2)	D1 (A4.2)				DOOR TO HAVE DRIP EDGE
X119						2	ALUM	K10 (A4.2) K10 (A4.2)	K10 (A4.2)	D10 (A4.2)			
X120			A	3'-0"	7'-0"	1	HM	A1 (A4.2) A1 (A4.2)	D1 (A4.2)				
X121			A	3'-0"	7'-0"	1	HM	A1 (A4.2) A1 (A4.2)	D1 (A4.2)				
X122						5	ALUM	G7 (A4.2) G7 (A4.2)	K7 (A4.2)	A7 (A4.2)			
X123			A	3'-0"	7'-0"	1	HM	A1 (A4.2) A1 (A4.2)	D1 (A4.2)				
X124			A	3'-0"	7'-0"	1	HM	A1 (A4.2) A1 (A4.2)	D1 (A4.2)				
X125			D	12'-0"	9'-4"								
X126						12	ALUM						SEE MANUFACTURER'S STANDARD DETAILS FOR OPENINGS IN PEMB
X201A			A	PR. 3'-0"	7'-0"	1	HM						DOOR TO HAVE DRIP EDGE
X201B			A	3'-0"	7'-0"	1	HM						DOOR TO HAVE DRIP EDGE
G01													2
G02													2, 3
G03													
G04													4

FIRST FLOOR INTERIOR OPENINGS

OPNG NO	FIRE RATING	HDW	DOOR TYPE	DOOR WIDTH	DOOR HEIGHT	FRAME TYPE	FRAME MAT'L	JAMB	HEAD	SILL	MUL	THR	REMARKS
104A						13	HM	G4 (A4.2) G4 (A4.2)	D4 (A4.2)	A4 (A4.2)	K4 (A4.2)		
104B						14	HM	G4 (A4.2) G4 (A4.2)	D4 (A4.2)	A4 (A4.2)	K4 (A4.2)		
128			B	PR. 3'-0"	7'-0"	1	HM	G1 (A4.2) G1 (A4.2)	K1 (A4.2)				
130			B	3'-0"	7'-0"	1	HM	G1 (A4.2) G1 (A4.2)	K1 (A4.2)				
131			A	3'-0"	7'-0"	1	HM	G1 (A4.2) G1 (A4.2)	K1 (A4.2)				
132			A	PR 2'-6"	7'-0"	1	HM	G1 (A4.2) G1 (A4.2)	K1 (A4.2)				
133			A	PR 2'-6"	7'-0"	1	HM	G1 (A4.2) G1 (A4.2)	K1 (A4.2)				
134			A	PR 2'-6"	7'-0"	1	HM	G1 (A4.2) G1 (A4.2)	K1 (A4.2)				
135			A	3'-0"	7'-0"	1	HM	G1 (A4.2) G1 (A4.2)	K1 (A4.2)				
136			A	3'-0"	7'-0"	1	HM	G1 (A4.2) G1 (A4.2)	K1 (A4.2)			L14 (A4.1)	
137A			B	3'-0"	7'-0"	1	HM	G1 (A4.2) G1 (A4.2)	K1 (A4.2)			L14 (A4.1)	
137B						10	HM	G4 (A4.2) G4 (A4.2)	D4 (A4.2)	A4 (A4.2)			1
137C						10	HM	G4 (A4.2) G4 (A4.2)	D4 (A4.2)	A4 (A4.2)			1
137D						4	HM	G4 (A4.2) G4 (A4.2)	D4 (A4.2)	A4 (A4.2)	K4 (A4.2)		1
137E						4	HM	G4 (A4.2) G4 (A4.2)	D4 (A4.2)	A4 (A4.2)	K4 (A4.2)		1
138			A	3'-0"	7'-0"	1	HM	G1 (A4.2) G1 (A4.2)	K1 (A4.2)			L11 (A4.1)	
139			A	3'-0"	7'-0"	1	HM	G1 (A4.2) G1 (A4.2)	K1 (A4.2)			L11 (A4.1)	
140A			B	3'-0"	7'-0"	8	HM	G1 (A4.2) G4 (A4.2)	K1 (A4.2)			L5 (A4.1)	
140B						11	HM	G4 (A4.2) G4 (A4.2)	D4 (A4.2)	A4 (A4.2)	K4 (A4.2)		1
140C						3	HM	G4 (A4.2) G4 (A4.2)	D4 (A4.2)	A4 (A4.2)			1
141A			B	3'-0"	7'-0"	8	HM	G1 (A4.2) G4 (A4.2)	K1 (A4.2)			L5 (A4.1)	
141B						7	HM	G4 (A4.2) G4 (A4.2)	D4 (A4.2)	A4 (A4.2)	K4 (A4.2)		1
142			A	3'-0"	7'-0"	1	HM	G1 (A4.2) G1 (A4.2)	K1 (A4.2)				

SCHEDULE NOTES:

A. DOOR THICKNESS = 1 3/4", TYPICAL
B. WOOD DOORS ARE SOLID CORE, TYPICAL
C. REFER TO "PA" DRAWINGS FOR FURTHER INFORMATION ON WIND SPEED DESIGN CRITERIA.
D. DIMENSIONS VERTICALLY LOCATING GLAZED OPENINGS ARE FROM FINISH SUBSTRATE.
E. WHEN FINISH ELEVATIONS ON OPPOSITE SIDES OF A DOOR ARE DIFFERENT, FRAME SHALL EXTEND PAST THE HIGHER FLOOR ELEVATION TO THE LOWER FLOOR ELEVATION.
F. FRAME AND LOUVER PROFILES ARE INTENDED TO BE GENERIC, NOT REPRESENT A PARTICULAR MANUFACTURER OR PRODUCT
G. SEE NOTE #11 ON SHEET A2.1

SCHEDULE REMARKS:

1. WINDOWS TO HAVE ONE-WAY MIRROR/REFLECTIVE FILM APPLIED. REFLECTIVE SIDE TO FACE ROOM ALLOWING OBSCURED VIEWING FROM CIRCULATION.
2. G01 & G02 TO HAVE MINIMUM 32" CLEAR PASSAGE AND MATCH EXISTING FENCE. GATES TO HAVE PANIC HARDWARE.
3. EXISTING GATE FROM BACK RELOCATED.
4. CHAIN LINK GATES TO MATCH ENCLOSURE.

OPENING SCHEDULE A1 N/A

FleischmanGarcia
ARCHITECTURE • PLANNING • INTERIOR DESIGN
SAFETY HARBOR OFFICE
195 FOURTH AVENUE NORTH
SAFETY HARBOR, FLORIDA 34695
PHONE (727) 725-8880
FAX (727) 725-3900
TAMPA OFFICE
324 HYDE PARK AVENUE, SUITE 300
TAMPA, FLORIDA 33606
PHONE (813) 251-4400
FAX (813) 251-1994
REGISTRATION NUMBER AA C000123
SARASOTA OFFICE
5967 CATTLEMEN LANE, SUITE 6
SARASOTA, FLORIDA 34232
PHONE (941) 342-9293
FAX (941) 342-9253

NEW TAMPA RECREATION CENTER ADDITION

TAMPA, FL 33647

THIS DESIGN AND DRAWING IS THE SOLE PROPERTY OF FLEISCHMANGARCIA. NO PART OF THIS WORK MAY BE REPRODUCED WITHOUT PRIOR WRITTEN PERMISSION FROM FLEISCHMANGARCIA.

I CERTIFY TO THE BEST OF MY KNOWLEDGE THAT THESE DRAWINGS COMPLY W/ ALL RELEVANT BUILDING CODES

FGA PROJECT NUMBER
18015

ISSUE DATE
11/07/18

REVISIONS
1 DATE: -
2 DATE: -
3 DATE: -
4 DATE: -

SHEET NUMBER
A4.1

Duane Wright\\safety-server-1\Arch\2018\18015_NTRC addition\Drawings\SHEETS\18015_A4.1-3.dwg
12-03-18

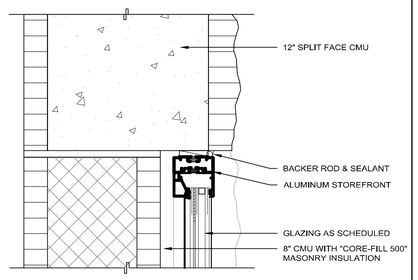

STOREFRONT HEAD DETAIL (JAMB SIMILAR) K10 3"=1'

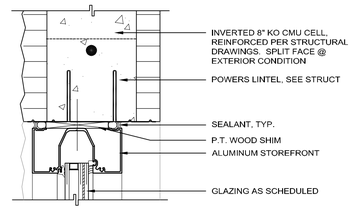

STOREFRONT HEAD DETAIL K7 3"=1'

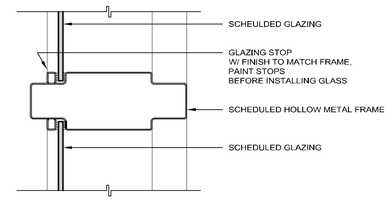

MULLION - WINDOW K4 3"=1'

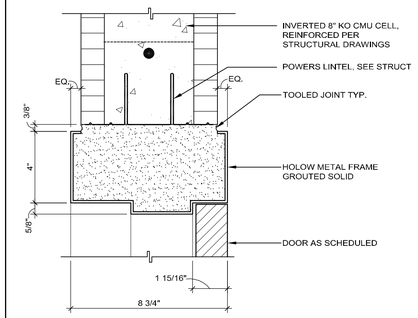

HOLLOW METAL HEAD DETAIL K1 3"=1'

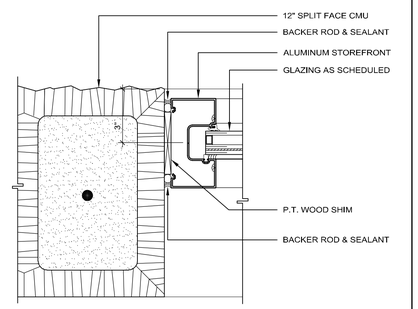

STOREFRONT JAMB DETAIL G10 3"=1'

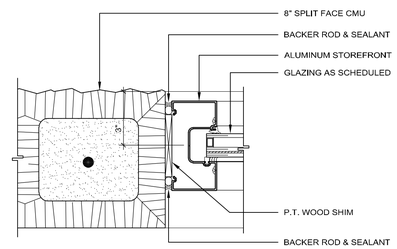

STOREFRONT JAMB DETAIL G7 3"=1'

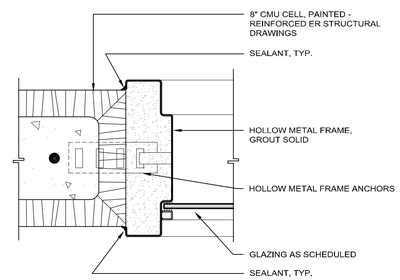

HOLLOW METAL JAMB DETAIL G4 3"=1'

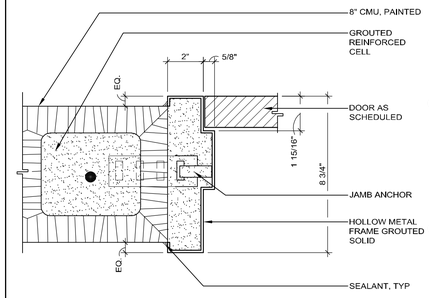

HOLLOW METAL JAMB DETAIL G1 3"=1'

COILING DOOR JAMB DETAIL D13 3"=1'

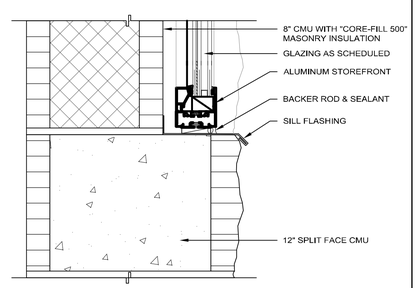

STOREFRONT SILL DETAIL D10 3"=1'

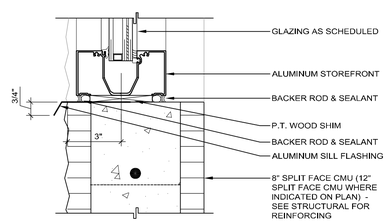

STOREFRONT SILL DETAIL D7 3"=1'

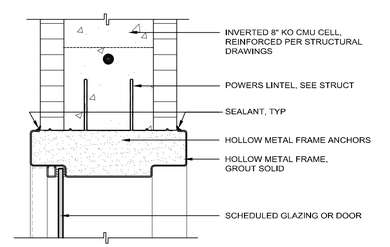

HOLLOW METAL HEAD DETAIL D4 3"=1'

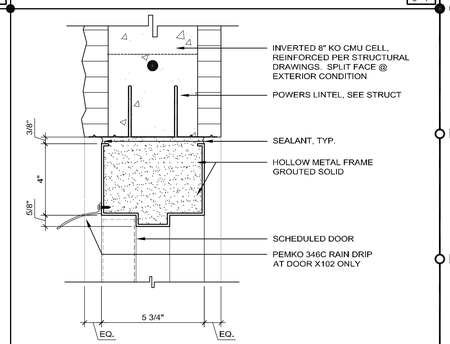

HOLLOW METAL HEAD DETAIL D1 3"=1'

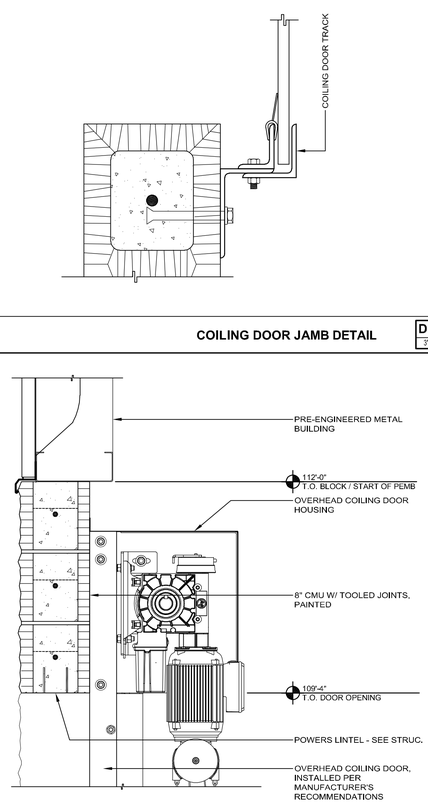

OVERHEAD COILING DOOR HEAD A13 1 1/2"=1'

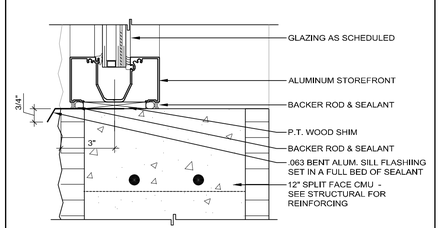

STOREFRONT SILL DETAIL A10 3"=1'

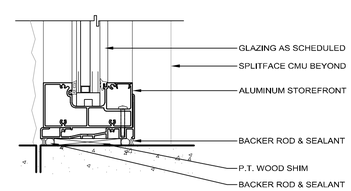

STOREFRONT SILL DETAIL A7 3"=1'

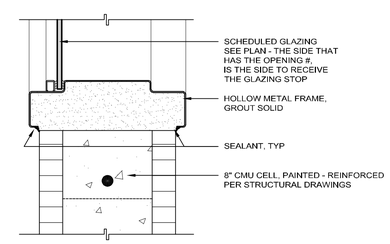

HOLLOW METAL SILL DETAIL A4 3"=1'

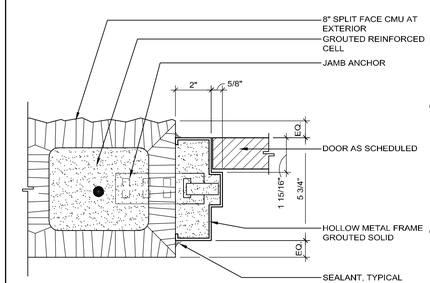

HOLLOW METAL JAMB DETAIL A1 3"=1'

FleischmanGarcia
ARCHITECTURE · PLANNING · INTERIOR DESIGN
SARASOTA OFFICE
1551 FOURTH AVENUE NORTH
SARASOTA, FLORIDA 34236
PHONE (941) 177-5-5880
FAX (941) 177-5-5886
TAMPA OFFICE
334 HYDE PARK AVENUE, SUITE 300
TAMPA, FLORIDA 33606
PHONE (813) 251-4400
FAX (813) 251-4488
REGISTRATION NUMBER AA C000123
ORLANDO OFFICE
5967 CATALDEN LANE, SUITE E
ORLANDO, FLORIDA 32822
PHONE (941) 342-6253
FAX (941) 342-6253

NEW TAMPA RECREATION CENTER ADDITION

TAMPA, FL 33647

THE DESIGN AND DRAWING IS THE SOLE PROPERTY OF FLEISCHMAN/GARCIA, INC. PARTS OF THIS WORK MAY BE REPRODUCED WITHOUT PRIOR WRITTEN CONSENT FROM FLEISCHMAN/GARCIA

I CERTIFY TO THE BEST OF MY KNOWLEDGE THAT THESE DRAWINGS COMPLY WITH ALL RELEVANT BUILDING CODES

FGA PROJECT NUMBER
18015

ISSUE DATE
11/07/18

REVISIONS
1 DATE: -
2 DATE: -
3 DATE: -
4 DATE: -

SHEET NUMBER
A4.2

Kathleen Pugh\2018\18015_NTRC addition\Drawings\SHEETS\18015_A4.1-3.dwg
12-19-18

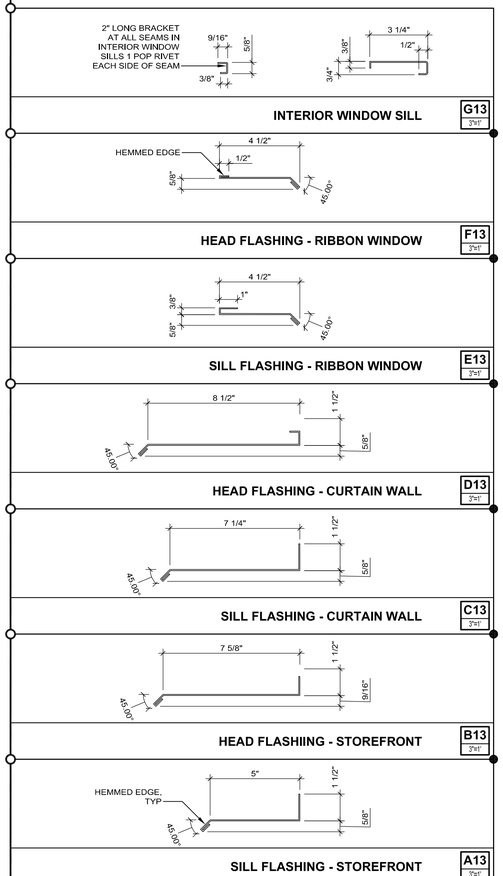

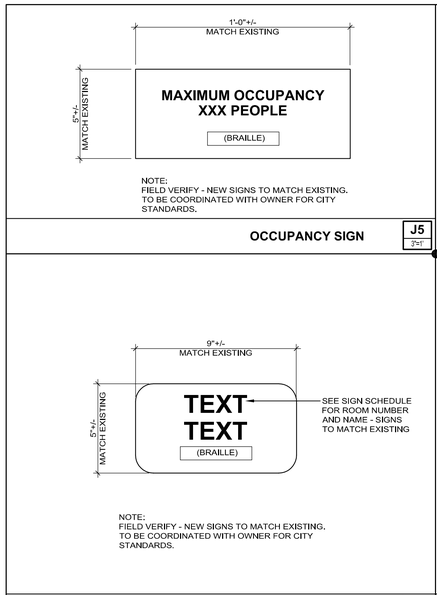

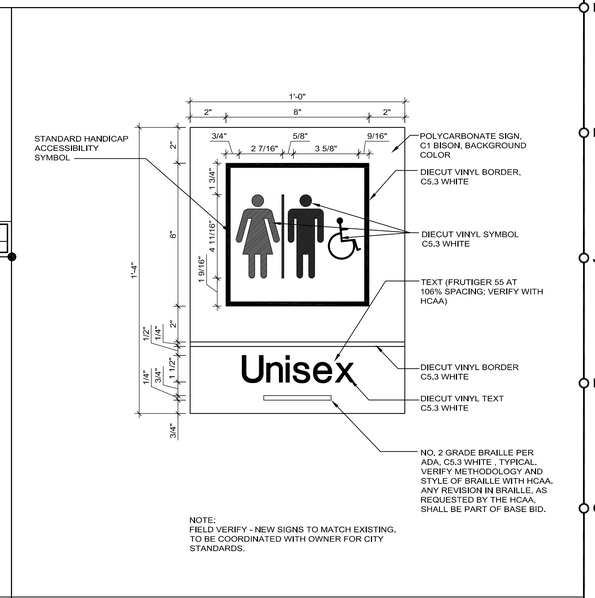

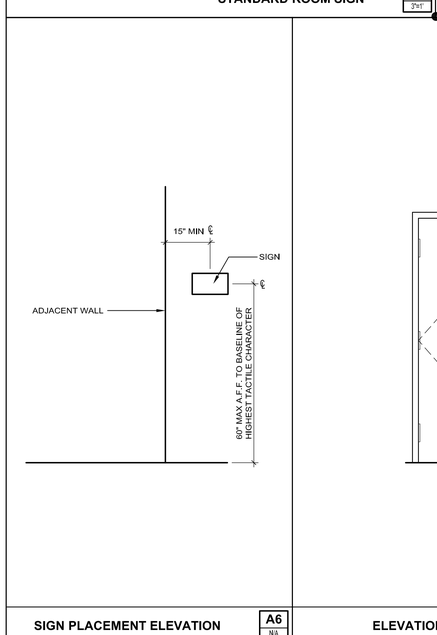

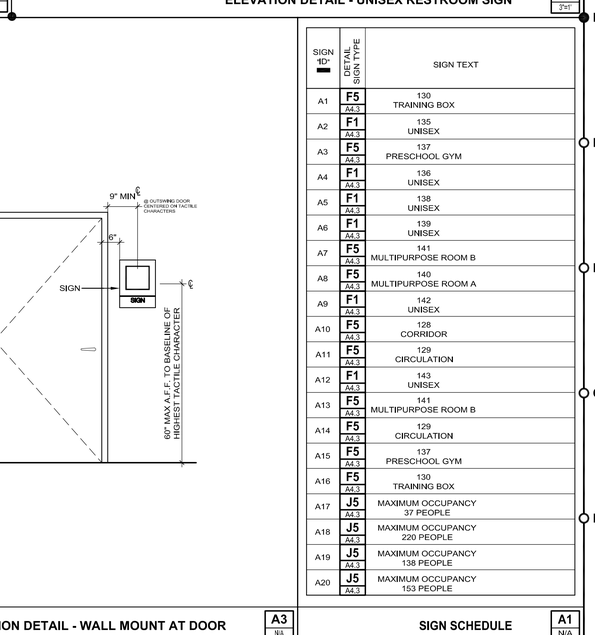

SIGN "ID"	DETAIL / SIGN TYPE	SIGN TEXT
A1	F5 / A4.3	130 TRAINING BOX
A2	F1 / A4.3	135 UNISEX
A3	F5 / A4.3	137 PRESCHOOL GYM
A4	F1 / A4.3	136 UNISEX
A5	F1 / A4.3	138 UNISEX
A6	F1 / A4.3	139 UNISEX
A7	F5 / A4.3	141 MULTIPURPOSE ROOM B
A8	F5 / A4.3	140 MULTIPURPOSE ROOM A
A9	F1 / A4.3	142 UNISEX
A10	F5 / A4.3	128 CORRIDOR
A11	F5 / A4.3	129 CIRCULATION
A12	F1 / A4.3	143 UNISEX
A13	F5 / A4.3	141 MULTIPURPOSE ROOM B
A14	F5 / A4.3	129 CIRCULATION
A15	F5 / A4.3	137 PRESCHOOL GYM
A16	F5 / A4.3	130 TRAINING BOX
A17	J5 / A4.3	MAXIMUM OCCUPANCY 37 PEOPLE
A18	J5 / A4.3	MAXIMUM OCCUPANCY 220 PEOPLE
A19	J5 / A4.3	MAXIMUM OCCUPANCY 138 PEOPLE
A20	J5 / A4.3	MAXIMUM OCCUPANCY 153 PEOPLE

SIGN SCHEDULE
A1
N/A

FleischmanGarcia
ARCHITECTURE · PLANNING · INTERIOR DESIGN
SAFETY · SECURITY · TECHNOLOGY
195 FOURTH AVENUE NORTH
ST. PETERSBURG, FLORIDA 33705
PHONE (727) 726-6800
FAX (727) 726-0666
324 HYDE PARK AVENUE, SUITE 300
TAMPA, FLORIDA 33606
PHONE (813) 251-4400
FAX (813) 251-4401
REGISTRATION NUMBER AA C000123
ORLANDO OFFICE
5967 CATTLEMEN LANE, SUITE 6
ORLANDO, FLORIDA 32835
PHONE (941) 342-9253
FAX (941) 342-9253

NEW TAMPA RECREATION CENTER ADDITION

TAMPA, FL 33647

THIS DESIGN AND DRAWING IS THE SOLE PROPERTY OF FLEISCHMAN/GARCIA, NO PART OF THIS DRAWING MAY BE REPRODUCED WITHOUT PRIOR WRITTEN PERMISSION FROM FLEISCHMAN/GARCIA

I CERTIFY TO THE BEST OF MY KNOWLEDGE THAT THESE DRAWINGS COMPLY WITH ALL RELEVANT BUILDING CODES

FGA PROJECT NUMBER
18015

ISSUE DATE
11/07/18

REVISIONS
1 DATE: -
2 DATE: -
3 DATE: -
4 DATE: -

SHEET NUMBER
A4.3

Duane Wright\autodp-server-1\Acad\2018\18015_NTRC addition\Drawings\SHEETS\18015_A4-1-3.dwg
12-20-18

NOTE:
ENTIRE BUILDING, EXISTING AND NEW ADDITION, TO HAVE WATER-PROOFING APPLIED.

NOTE:
100'-0" = GEOGRAPHICAL NAVD 43.32

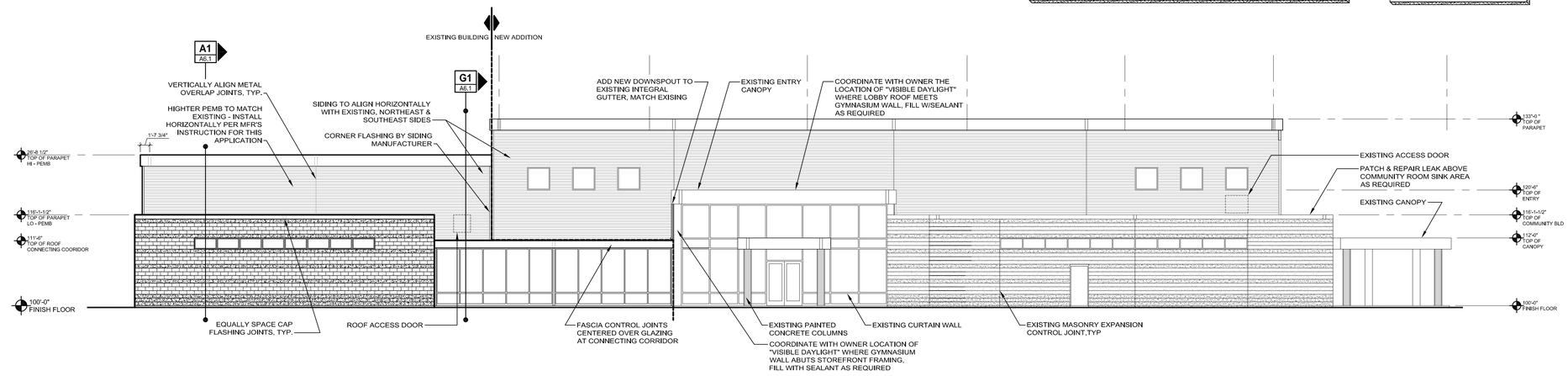

NORTHEAST (FRONT / ENTRANCE) ELEVATION — J1 3/32"=1

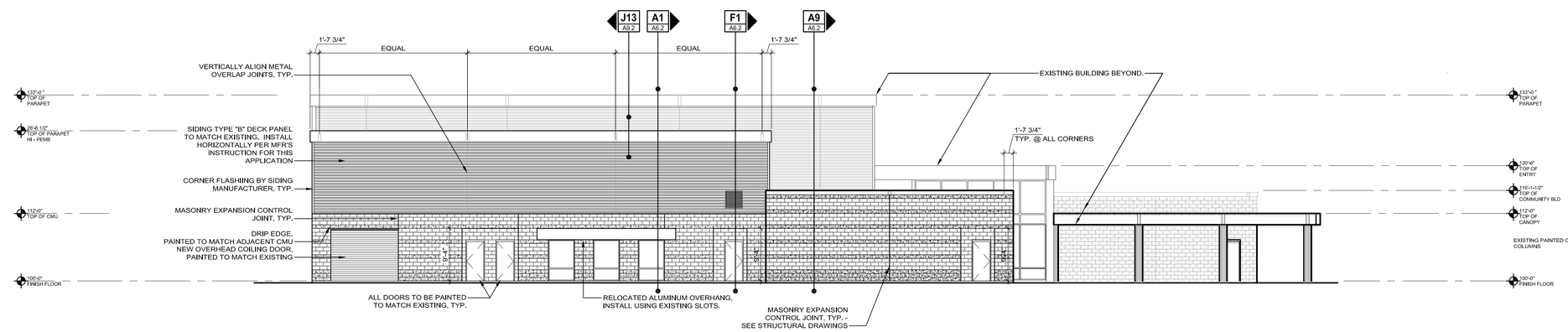

SOUTHEAST (SIDE / COMMERCE PARK BLVD) ELEVATION — E1 3/32"=1

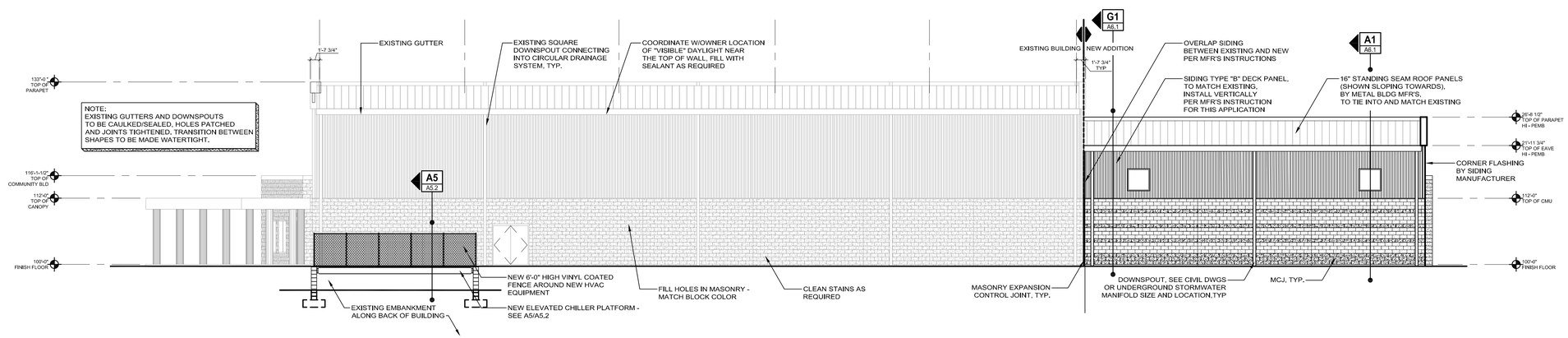

SOUTHWEST (BACK) ELEVATION — A1 3/32"=1

FleischmanGarcia
ARCHITECTURE · PLANNING · INTERIOR DESIGN
SAINT PETERSBURG OFFICE
195 FOURTH AVENUE NORTH
ST. PETERSBURG, FLORIDA 33705
PHONE (727) 726-8080
FAX (727) 726-9086
TAMPA OFFICE
324 HYDE PARK AVENUE, SUITE 300
TAMPA, FLORIDA 33606
PHONE (813) 251-4400
FAX (813) 251-4411
5967 CAITLIN'S LANE, SUITE 6
ORLANDO, FLORIDA 32822
PHONE (941) 342-9253
FAX (941) 342-9253
REGISTRATION NUMBER AA C000123

NEW TAMPA RECREATION CENTER ADDITION

TAMPA, FL 33647

THE DESIGN AND DRAWING IS THE SOLE PROPERTY OF FLEISCHMAN/GARCIA, INC. PARTIAL OR WHOLE USE MAY BE REPRODUCED WITHOUT PRIOR WRITTEN PERMISSION FROM FLEISCHMAN/GARCIA, INC.

I CERTIFY TO THE BEST OF MY KNOWLEDGE THAT THESE DRAWINGS COMPLY WITH ALL RELEVANT BUILDING CODES

FGA PROJECT NUMBER
18015

ISSUE DATE
11/07/18

REVISIONS
1 DATE: -
2 DATE: -
3 DATE: -
4 DATE: -

SHEET NUMBER
A5.1

11-26-18 Duane Wright/sallejoy-server-1/Acad/2018/18015_NTRC addition/Drawings/SHEETS/18015_A5.1-2.dwg

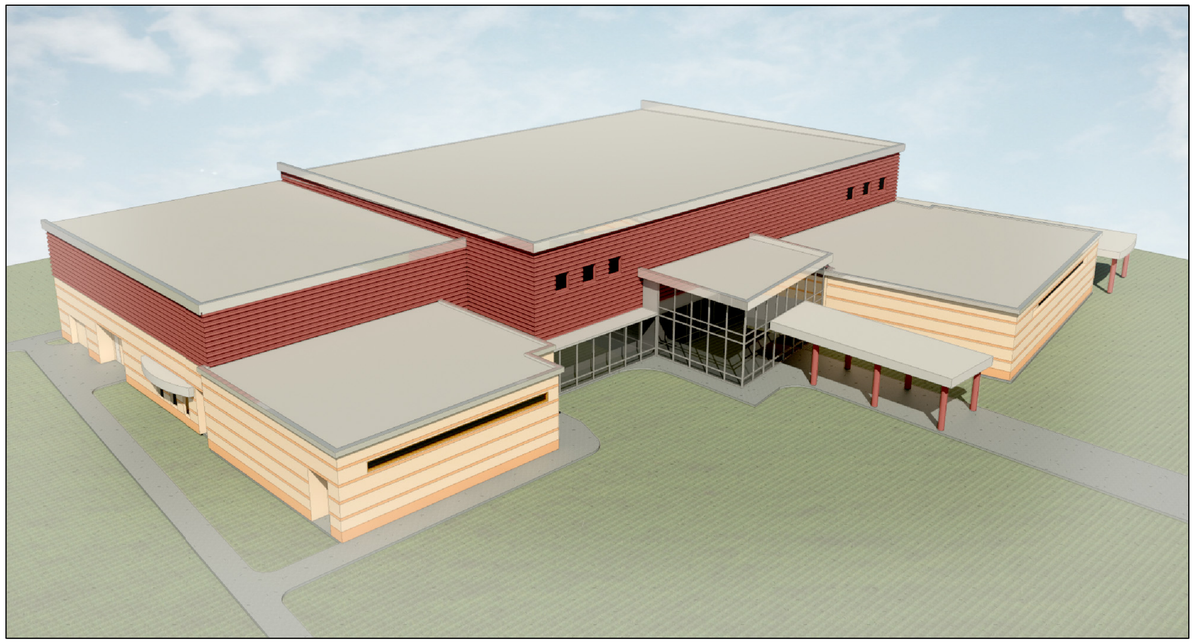

RENDERING - AERIAL VIEW G1 NTS

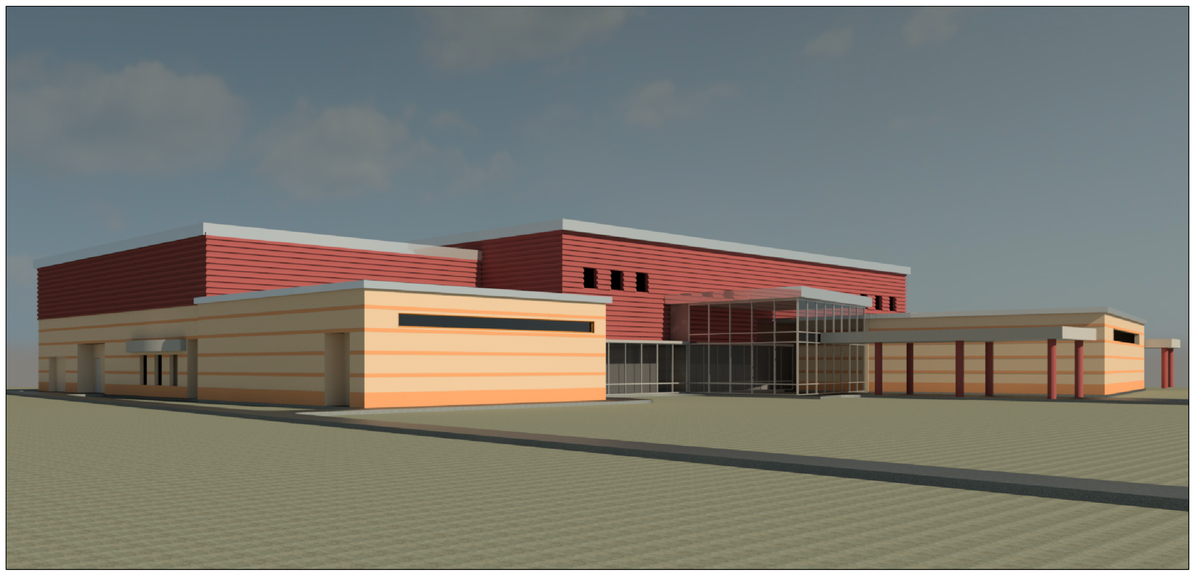

RENDERING - GROUND VIEW A1 NTS

FleischmanGarcia
ARCHITECTURE · PLANNING · INTERIOR DESIGN
SAFETY HARBOR OFFICE
195 FOURTH AVENUE NORTH
SAFETY HARBOR, FLORIDA 34695
PHONE: (727) 725-8800
FAX: (727) 725-3900

TAMPA OFFICE
324 HYDE PARK AVENUE, SUITE 300
TAMPA, FLORIDA 33606
PHONE: (813) 251-4400
FAX: (813) 251-1994

SARASOTA OFFICE
5907 CATTLEMEN LANE, SUITE 6
SARASOTA, FLORIDA 34232
PHONE: (941) 342-9293
FAX: (941) 342-9233

REGISTRATION NUMBER AA C000123

NEW TAMPA RECREATION CENTER ADDITION

TAMPA, FL 33647

THIS DESIGN AND DRAWING IS THE SOLE PROPERTY OF FLEISCHMANGARCIA. NO PART OF THIS WORK MAY BE REPRODUCED WITHOUT PRIOR WRITTEN PERMISSION FROM FLEISCHMANGARCIA.

I CERTIFY TO THE BEST OF MY KNOWLEDGE THAT THESE DRAWINGS COMPLY W/ ALL RELEVANT BUILDING CODES

FGA PROJECT NUMBER
18015

ISSUE DATE
11/07/18

REVISIONS
1 DATE: -
2 DATE: -
3 DATE: -
4 DATE: -

SHEET NUMBER
A5.1A

Duane Wright P:\2018\18015_NTRC addition\Drawings\SHEETS\18015_A5.1-2.dwg
11-28-18

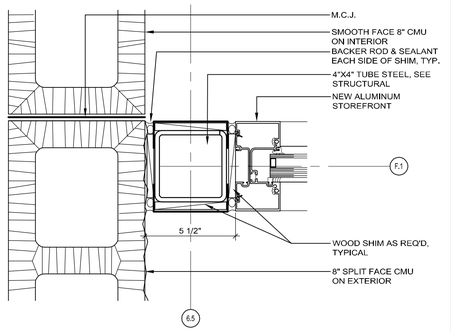

ENLARGED PLAN DETAIL K13 3"=1'

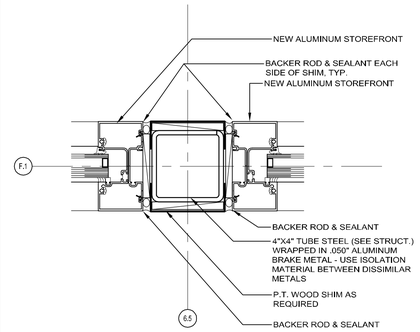

ENLARGED PLAN DETAIL K10 3"=1'

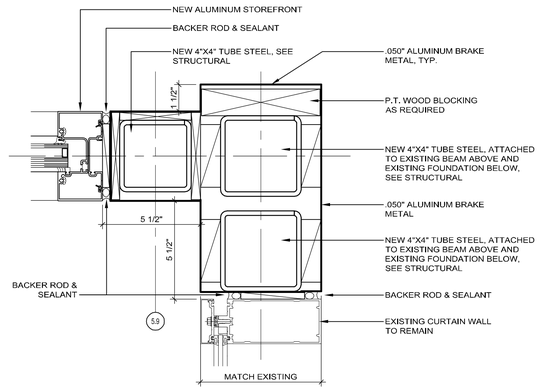

ENLARGED PLAN DETAIL K6 3"=1'

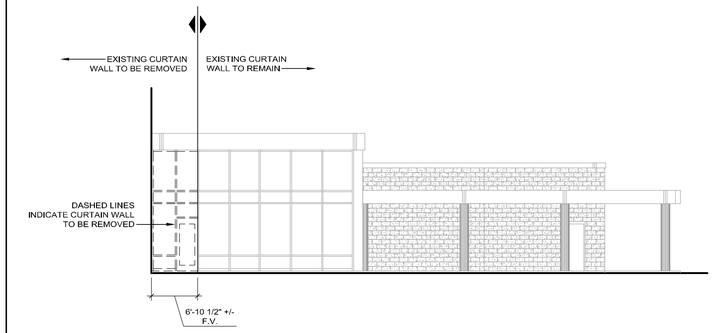

PARTIAL EXTERIOR ELEVATION - DEMOLITION K1 3/32"=1'

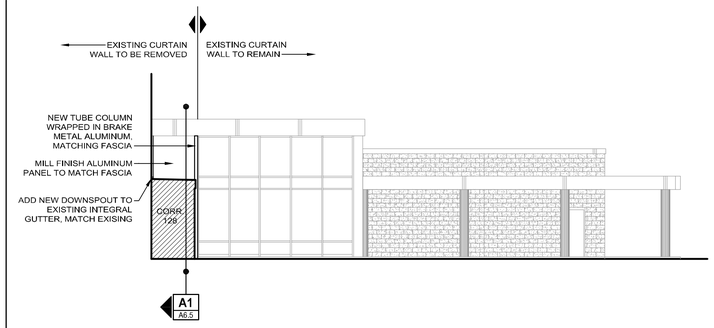

PARTIAL EXTERIOR ELEVATION G1 3/32"=1'

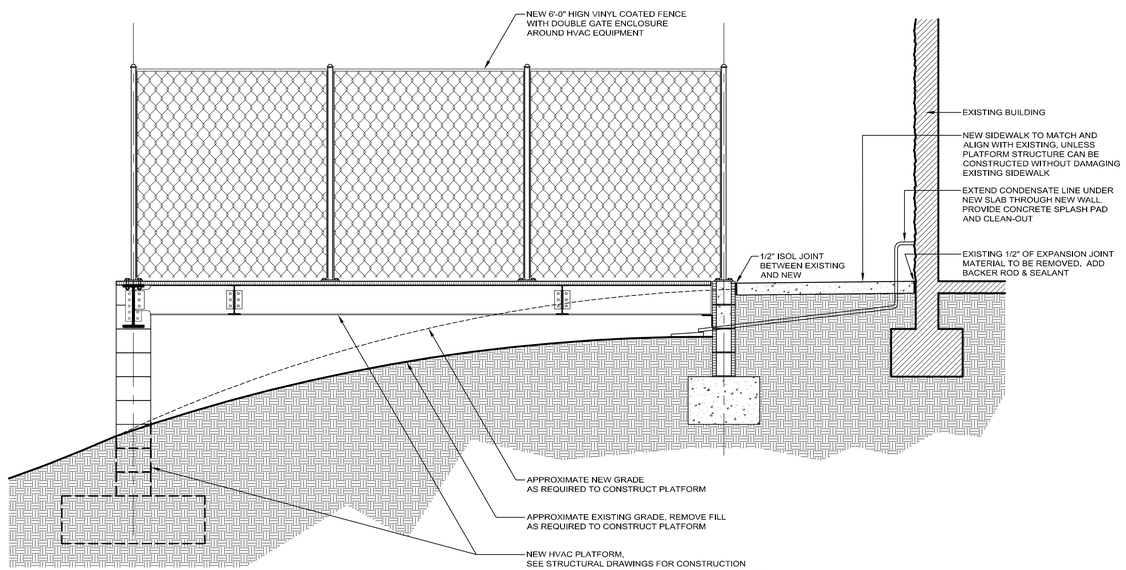

HVAC PLATFORM SECTION A5 1/2"=1'

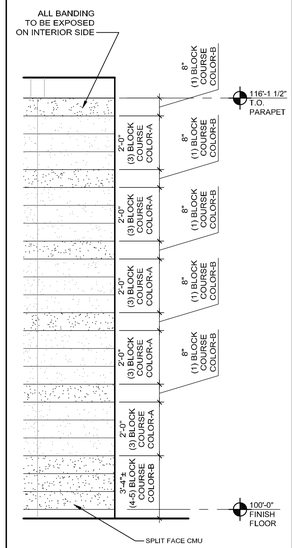

@ LOW PEMB

WALL COLOR COURSING DETAIL A3 3/8"=1'

COLOR A: TO MATCH EXISTING "RED"

COLOR B: TO MATCH EXISTING "GRAY"

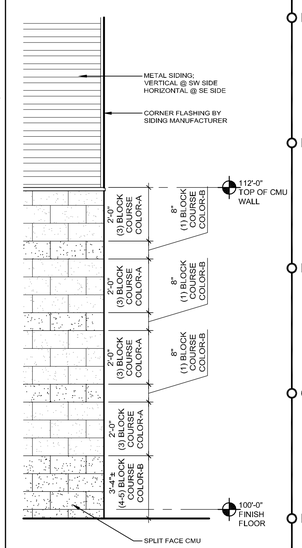

@ HIGH PEMB

WALL COLOR COURSING DETAIL A1 3/8"=1'

FleischmanGarcia
ARCHITECTURE · PLANNING · INTERIOR DESIGN
SAINT PETERSBURG OFFICE
535 FOURTH AVENUE NORTH
SAINT PETERSBURG, FL 33705
PHONE (727) 726-5800
FAX (727) 726-9066
TAMPA OFFICE
3324 HYDE PARK AVENUE, SUITE 300
TAMPA, FLORIDA 33607
PHONE (813) 217-4460
FAX (813) 217-4466
ORLANDO OFFICE
5967 CATH LORN LANE, SUITE G
ORLANDO, FLORIDA 32822
PHONE (941) 342-6293
FAX (941) 342-6293
REGISTRATION NUMBER AA C000123

NEW TAMPA RECREATION CENTER ADDITION

TAMPA, FL 33647

THE DESIGN AND DRAWING IS THE SOLE PROPERTY OF FLEISCHMAN/GARCIA, INC. AND MAY NOT BE REPRODUCED WITHOUT THE WRITTEN PERMISSION FROM FLEISCHMAN/GARCIA

I CERTIFY TO THE BEST OF MY KNOWLEDGE THAT THESE DRAWINGS COMPLY W/ ALL RELEVANT BUILDING CODES

FGA PROJECT NUMBER
18015

ISSUE DATE
11/07/18

REVISIONS
1 DATE: -
2 DATE: -
3 DATE: -
4 DATE: -

SHEET NUMBER
A5.2

11-26-18 Duane Wright P:\2018\18015_NTRC addition\Drawings\SHEETS\18015_A5.1-2.dwg

NOTE:
'SEE STRUCT' INDICATES THOSE ITEMS WHERE ALL DATA CONCERNING SIZE, LOCATION, TYPE, AND/OR STRENGTH OF MATERIAL WILL BE FOUND IN THE STRUCTURAL SHEETS

NOTE:
ALL EXPOSED METAL, COLUMNS, GIRTS, PURLINS, ETC SHALL BE PAINTED W/ (2) TWO COLOR SCHEME TO MATCH ADJACENT WALL, PAINT TO CONTAIN RUST INHIBITOR. ALL EXPOSED METAL TO HAVE GRAY FACTORY APPLIED PRIMER.

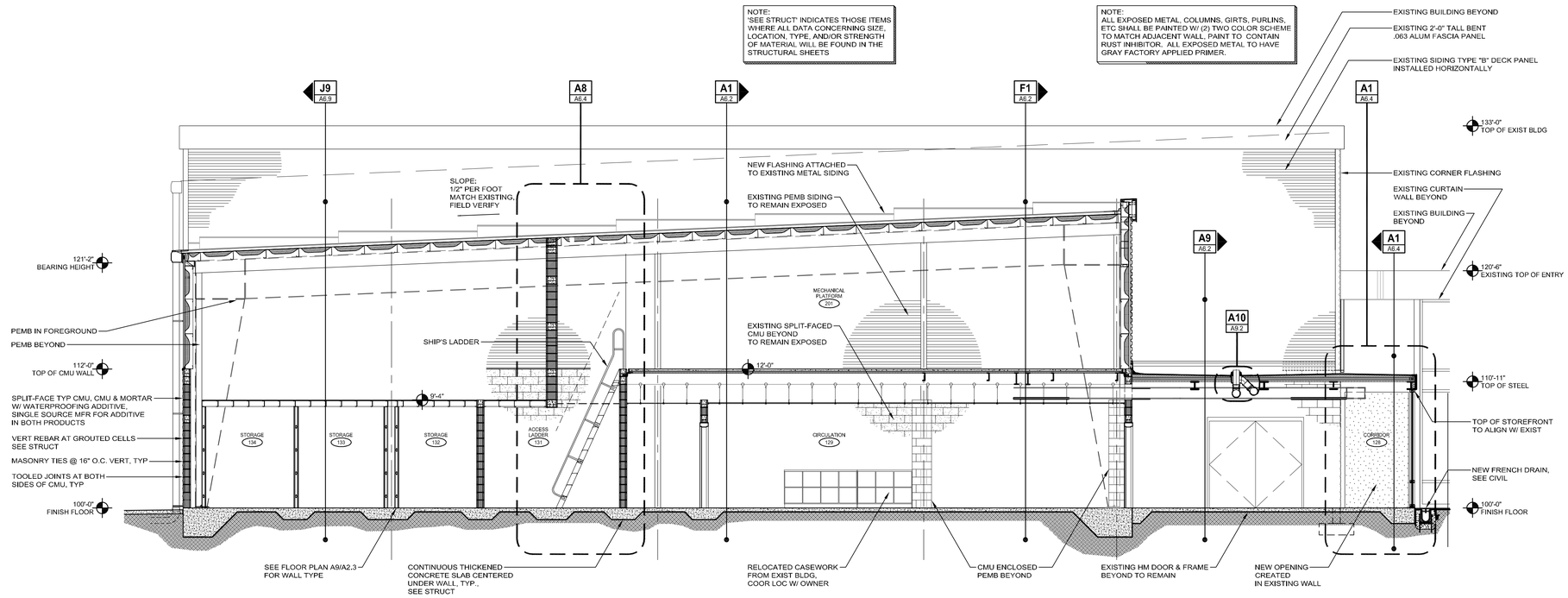

BUILDING SECTION G1 3/16"=1'

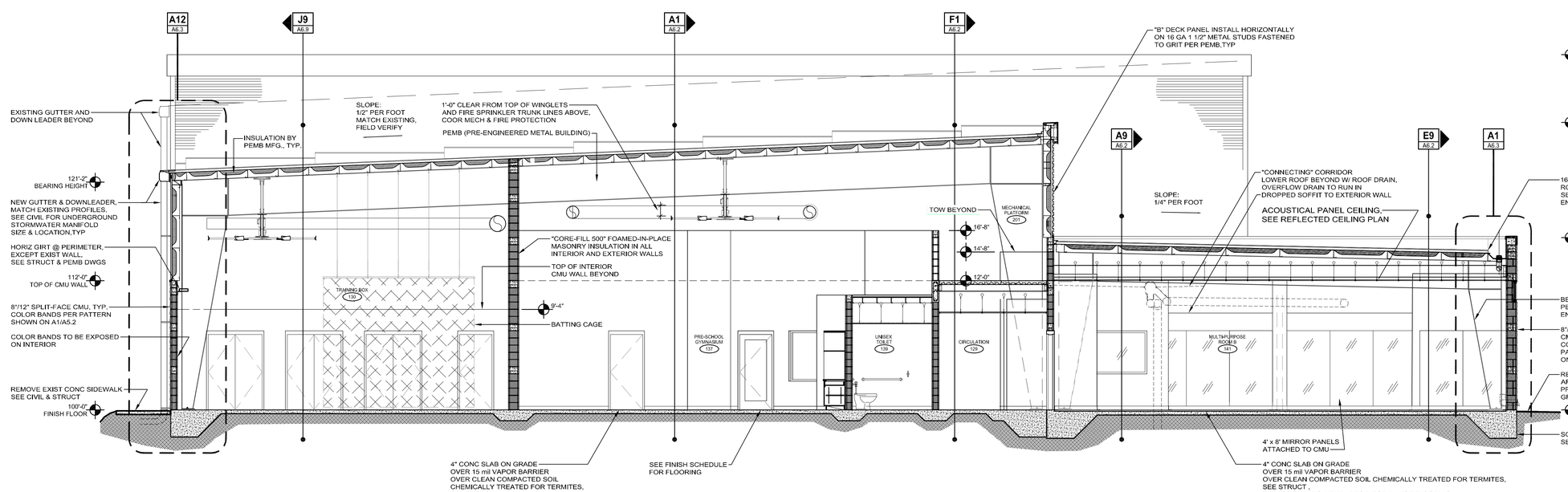

BUILDING SECTION A1 3/16"=1'

FleischmanGarcia
ARCHITECTURE · PLANNING · INTERIOR DESIGN
SAINT PETERSBURG OFFICE
195 FOURTH AVENUE NORTH
SAINT PETERSBURG, FL 33705
PHONE (727) 726-5800
FAX (727) 726-5900
TAMPA OFFICE
324 HYDE PARK AVENUE, SUITE 350
TAMPA, FLORIDA 33606
PHONE (813) 251-4460
FAX (813) 251-4465
5967 CLYDE LAMPE LANE, SUITE 6
ORLANDO, FLORIDA 32822
PHONE (941) 342-6293
FAX (941) 342-6293
REGISTRATION NUMBER AA C000123

NEW TAMPA RECREATION CENTER ADDITION

TAMPA, FL 33647

THE DESIGN AND DRAWING IS THE SOLE PROPERTY OF FLEISCHMAN/GARCIA, INC. AND MAY NOT BE REPRODUCED WITHOUT WRITTEN PERMISSION FROM FLEISCHMAN/GARCIA

I CERTIFY TO THE BEST OF MY KNOWLEDGE THAT THESE DRAWINGS COMPLY W/ ALL RELEVANT BUILDING CODES

FGA PROJECT NUMBER
18015

ISSUE DATE
11/07/18

REVISIONS
1 DATE: -
2 DATE: -
3 DATE: -
4 DATE: -

SHEET NUMBER
A6.1

Duane Wright/P:\2018\18015_NTRC addition\Drawings\SHEETS\18015_A6.1-2.dwg
11-20-18

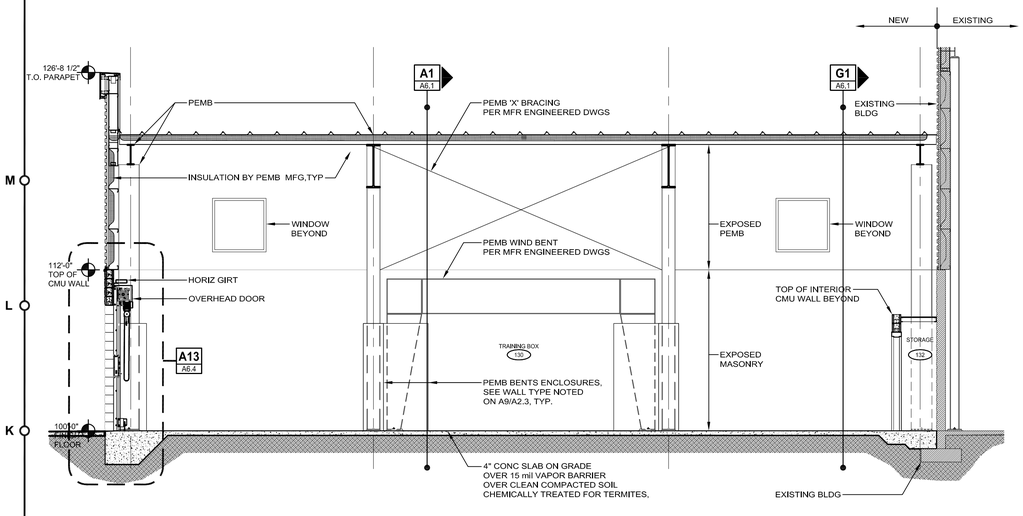

BUILDING SECTION J9 3/16"=1'

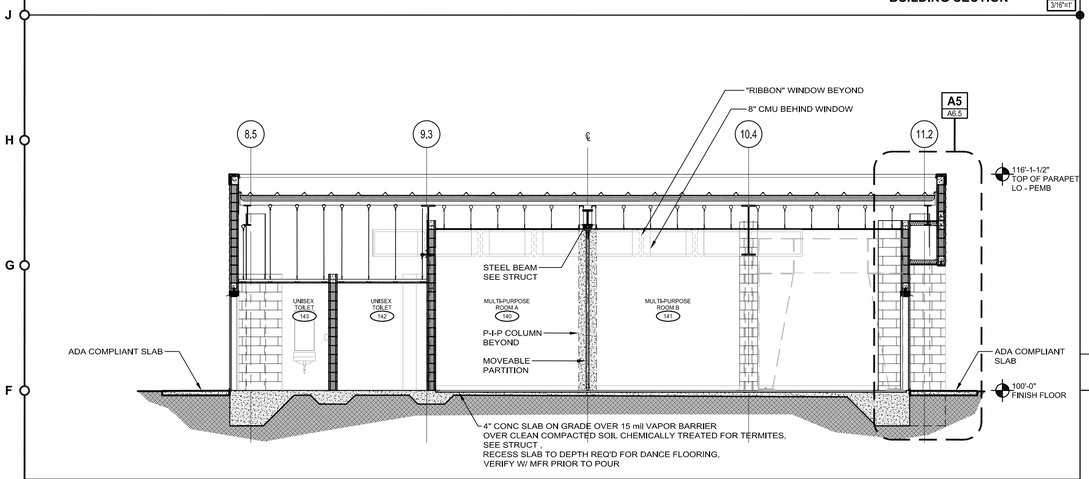

BUILDING SECTION E9 3/16"=1'

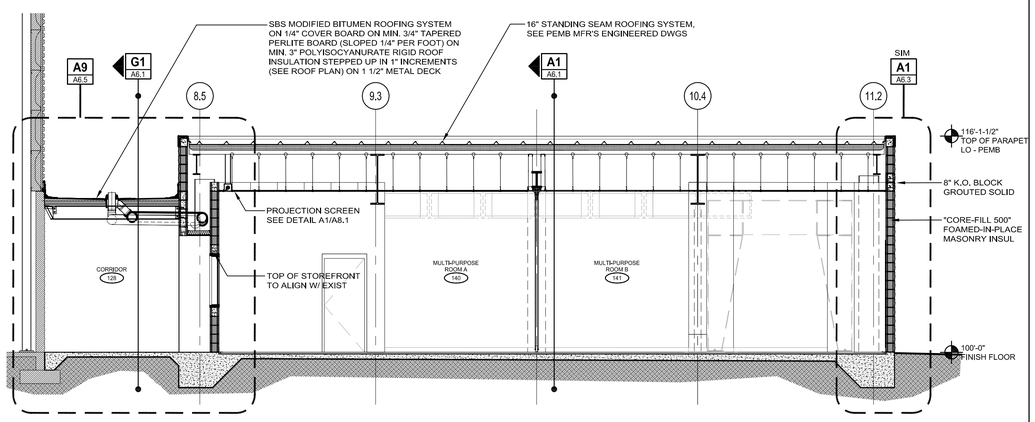

BUILDING SECTION A9 3/16"=1'

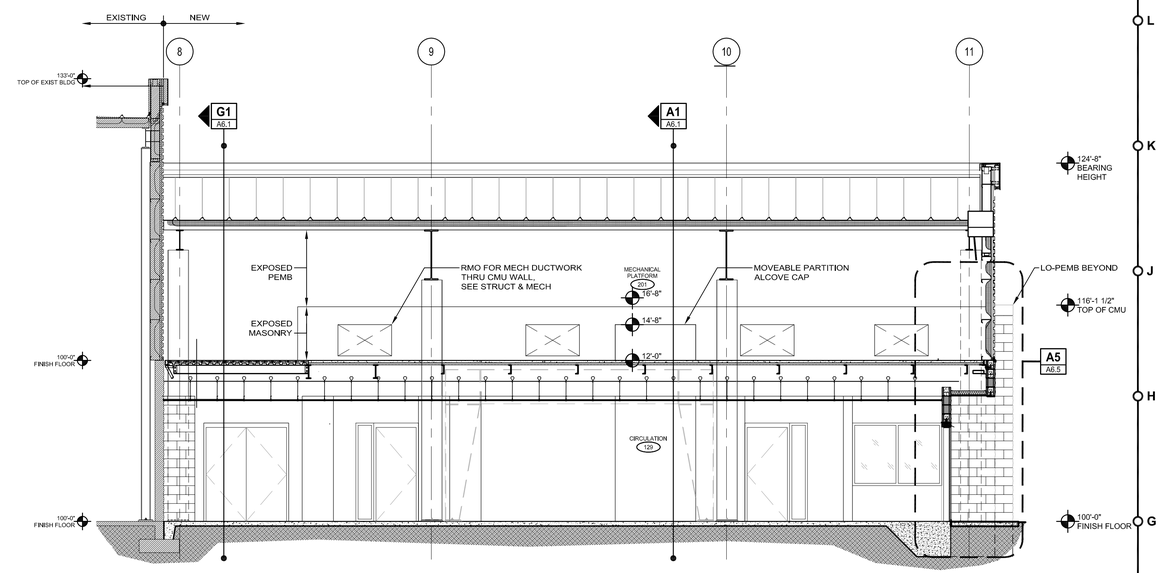

BUILDING SECTION F1 3/16"=1'

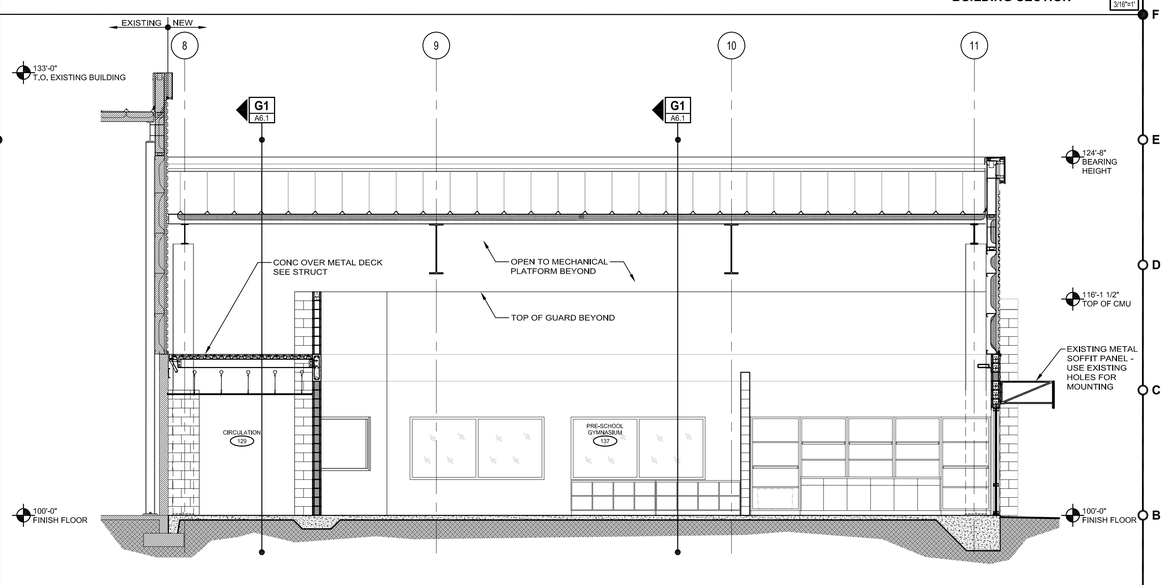

BUILDING SECTION A1 3/16"=1'

FleischmanGarcia
ARCHITECTURE · PLANNING · INTERIOR DESIGN
SAINT PETERSBURG OFFICE
195 FOURTH AVENUE NORTH
ST. PETERSBURG, FLORIDA 33705
PHONE (727) 726-5880
FAX (727) 726-5886
TAMPA OFFICE
324 HYDE PARK AVENUE, SUITE 300
TAMPA, FLORIDA 33606
PHONE (813) 251-4400
FAX (813) 251-4401
5967 CASTLEMAIN LANE, SUITE 6
ALPHARETTA, GEORGIA 30005
PHONE (404) 342-6253
FAX (404) 342-6253
REGISTRATION NUMBER AA C000123

NEW TAMPA RECREATION CENTER ADDITION

TAMPA, FL 33647

THE FESEI AND DRAWING IS THE SOLE PROPERTY OF FLEISCHMAN/GARCIA, INC. THE FESEI AND DRAWING MAY NOT BE REPRODUCED WITHOUT THE WRITTEN CONSENT OF FLEISCHMAN/GARCIA, INC.

I CERTIFY TO THE BEST OF MY KNOWLEDGE THAT THESE DRAWINGS COMPLY W/ ALL RELEVANT BUILDING CODES

FGA PROJECT NUMBER
18015

ISSUE DATE
11/07/18

REVISIONS
1 DATE: -
2 DATE: -
3 DATE: -
4 DATE: -

SHEET NUMBER
A6.2

12-20-18 Duane Wright\sabfileprserver-1\Arch\2018\18015_NTRC addition\Drawings\SHEETS\18015_A6.1-2.dwg

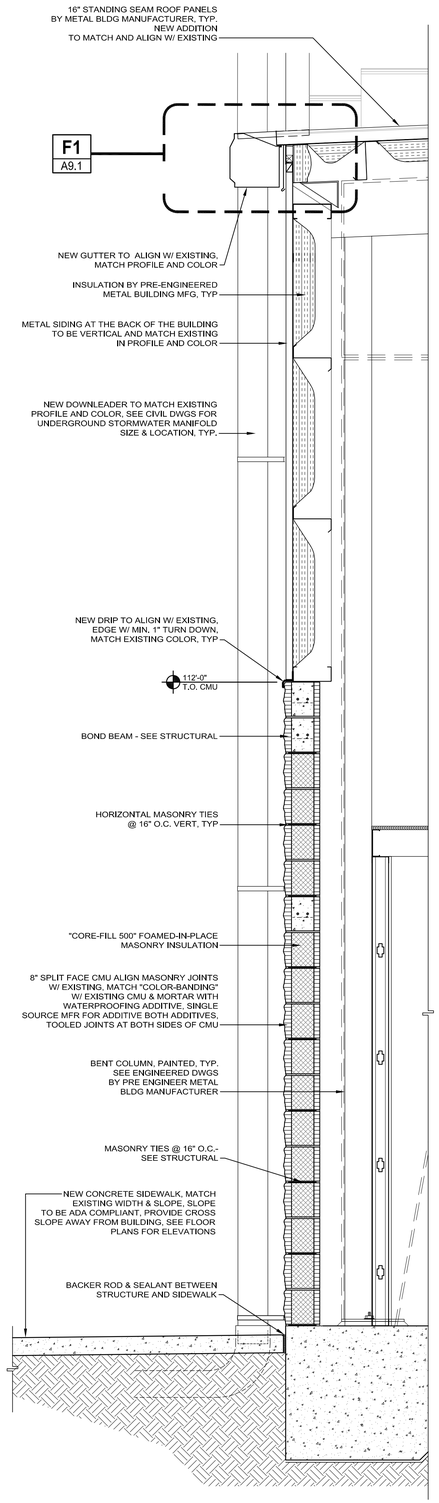

WALL SECTION A13 3/4"=1'

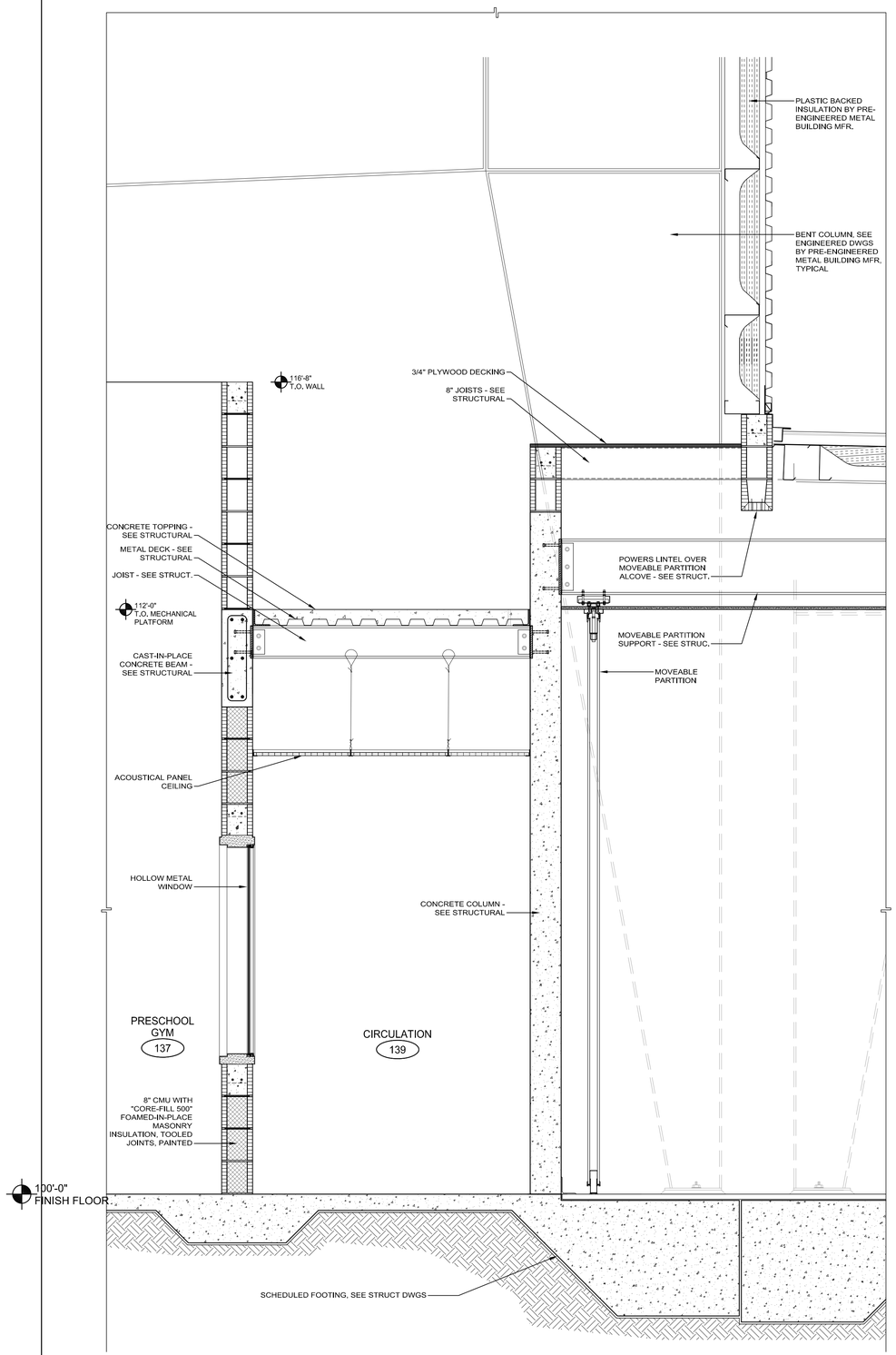

WALL SECTION A5 3/4"=1'

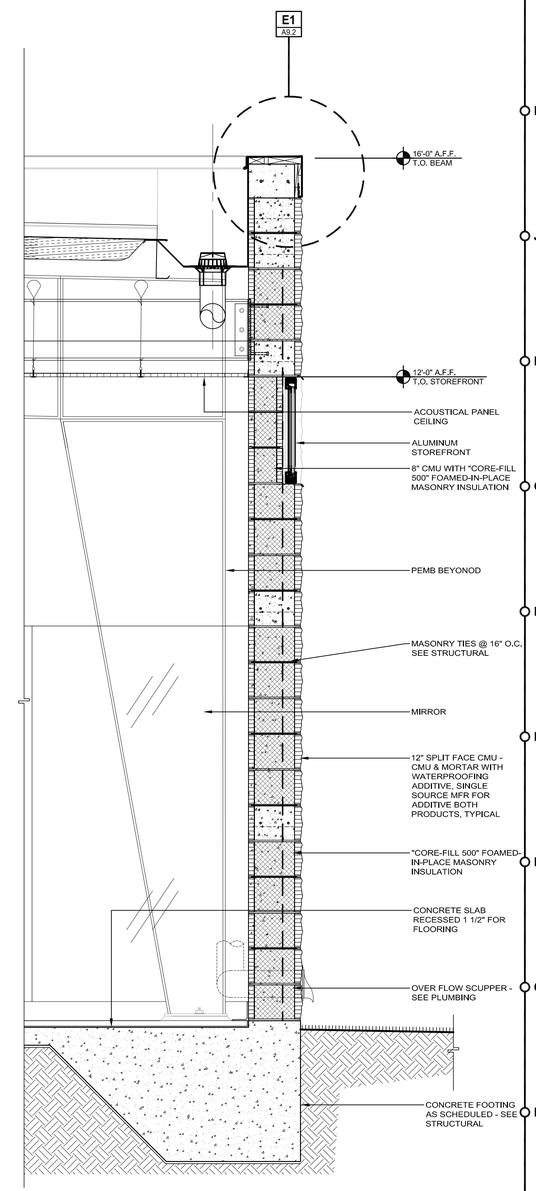

WALL SECTION A1 3/4"=1'

FleischmanGarcia
ARCHITECTURE · PLANNING · INTERIOR DESIGN
SAINT PETERSBURG OFFICE
195 FOURTH AVENUE NORTH
SAINT PETERSBURG, FLORIDA 33705
PHONE (727) 726-5880
FAX (727) 726-5880

TAMPA OFFICE
324 HYDE PARK AVENUE, SUITE 300
TAMPA, FLORIDA 33606
PHONE (813) 251-4400
FAX (813) 251-4401
REGISTRATION NUMBER AA C000123

ORLANDO OFFICE
5967 CATTLEMEN LANE, SUITE 6
ORLANDO, FLORIDA 32835
PHONE (941) 342-0293
FAX (941) 342-0253

NEW TAMPA RECREATION CENTER ADDITION

TAMPA, FL 33647

THE DESIGN AND DRAWING IS THE SOLE PROPERTY OF FLEISCHMANGARCIA, NO PART OF THIS DRAWING MAY BE REPRODUCED WITHOUT PRIOR WRITTEN PERMISSION FROM FLEISCHMANGARCIA.

I CERTIFY TO THE BEST OF MY KNOWLEDGE THAT THESE DRAWINGS COMPLY WITH ALL RELEVANT BUILDING CODES

FGA PROJECT NUMBER
18015

ISSUE DATE
11/07/18

REVISIONS
1 DATE: -
2 DATE: -
3 DATE: -
4 DATE: -

SHEET NUMBER
A6.3

12-03-18
Duane Wright/sadley-server-1/Acad/2018/18015_NTRC addition/Drawings/SHEETS/18015_A6.3-0.dwg

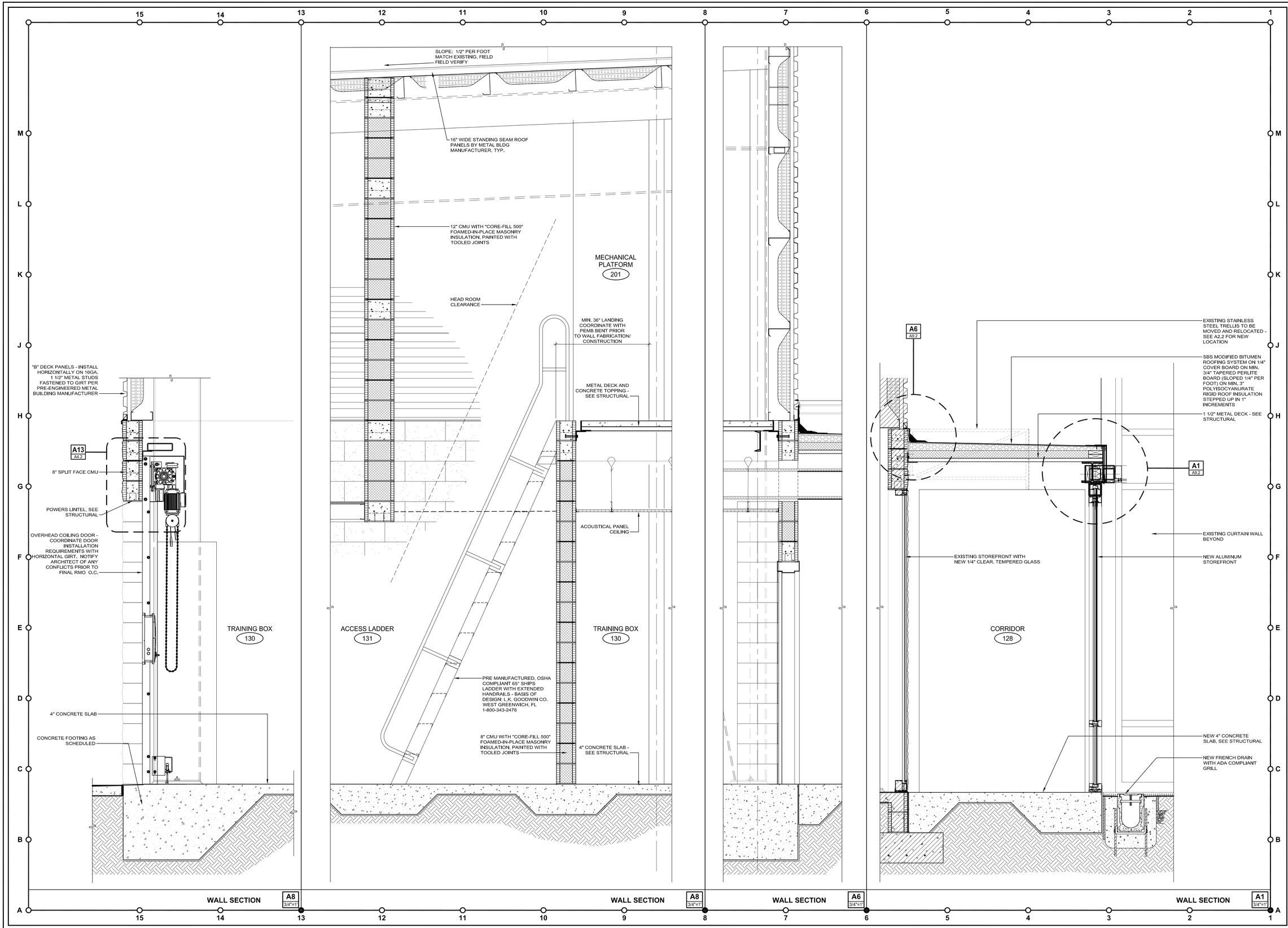

FleischmanGarcia
ARCHITECTURE · PLANNING · INTERIOR DESIGN
SAITH & ASSOCIATES, INC. ASSOCIATED OFFICE
195 FOURTH AVENUE NORTH
NAPLES, FLORIDA 34102-5605
PHONE (727) 726-8880
FAX (727) 726-9086
324 HYDE PARK AVENUE, SUITE 300
TAMPA, FLORIDA 33606
PHONE (813) 251-4400
FAX (813) 251-4488
REGISTRATION NUMBER AA C000123
5967 CASTLEMAIN LANE, SUITE 6
ORLANDO, FLORIDA 32822
PHONE (941) 342-0253
FAX (941) 342-0253

NEW TAMPA RECREATION CENTER ADDITION

TAMPA, FL 33647

THE DESIGN AND DRAWING IS THE SOLE PROPERTY OF FLEISCHMANGARCIA. NO PART OF THIS WORK MAY BE REPRODUCED WITHOUT PRIOR WRITTEN PERMISSION FROM FLEISCHMANGARCIA.

I CERTIFY TO THE BEST OF MY KNOWLEDGE THAT THESE DRAWINGS COMPLY W/ ALL RELEVANT BUILDING CODES

FGA PROJECT NUMBER
18015

ISSUE DATE
11/07/18

REVISIONS
1 DATE: -
2 DATE: -
3 DATE: -
4 DATE: -

SHEET NUMBER
A6.4

12-03-18
Duane Wright\staffdey=server-1\Archi\2018\18015_NTRC addition\Drawings\SHEETS\18015_A0-3-5.dwg

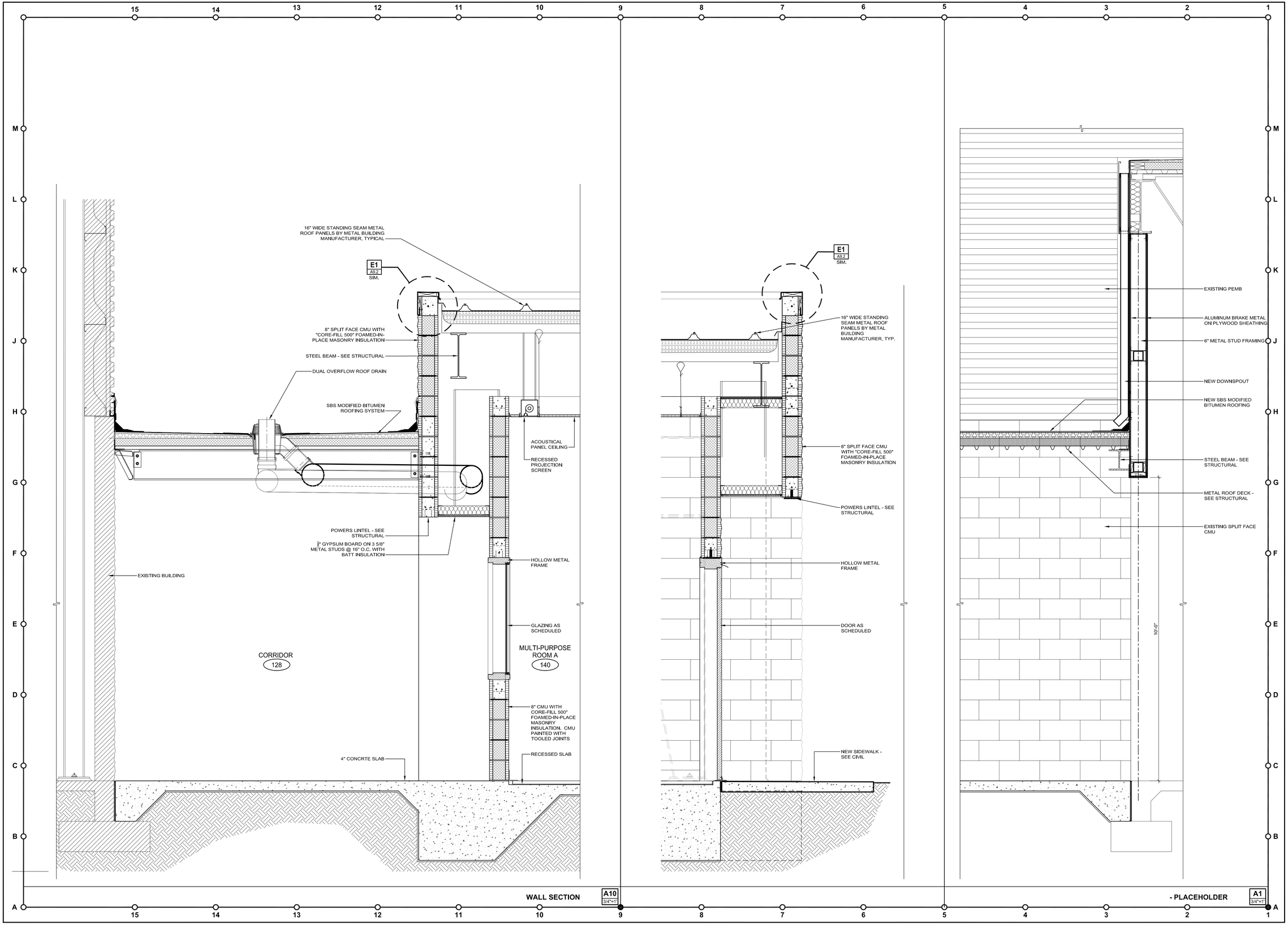

FleischmanGarcia

ARCHITECTURE · PLANNING · INTERIOR DESIGN

SAFETY HARBOR OFFICE
195 FOURTH AVENUE NORTH
SAFETY HARBOR, FLORIDA 34695
PHONE (727) 725-8880
FAX (727) 725-3960

TAMPA OFFICE
324 HYDE PARK AVENUE, SUITE 300
TAMPA, FLORIDA 33606
PHONE (813) 251-4400
FAX (813) 251-1994

SARASOTA OFFICE
5967 CATTLEMEN LANE, SUITE 6
SARASOTA, FLORIDA 34232
PHONE (941) 342-9293
FAX (941) 342-9253

REGISTRATION NUMBER AA C000123

NEW TAMPA RECREATION CENTER ADDITION

TAMPA, FL 33647

THIS DESIGN AND DRAWING IS THE SOLE PROPERTY OF FLEISCHMANGARCIA. NO PART OF THIS WORK MAY BE REPRODUCED WITHOUT PRIOR WRITTEN PERMISSION FROM FLEISCHMANGARCIA

I CERTIFY TO THE BEST OF MY KNOWLEDGE THAT THESE DRAWINGS COMPLY W/ ALL RELEVANT BUILDING CODES

FGA PROJECT NUMBER
18015

ISSUE DATE
11/07/18

REVISIONS
1 DATE: -
2 DATE: -
3 DATE: -
4 DATE: -

SHEET NUMBER
A6.5

Duane Wright/safety-server-1/Arch/2018/18015_NTRC addition/Drawings/SHEETS/18015_A6.3-5.dwg
12-03-18

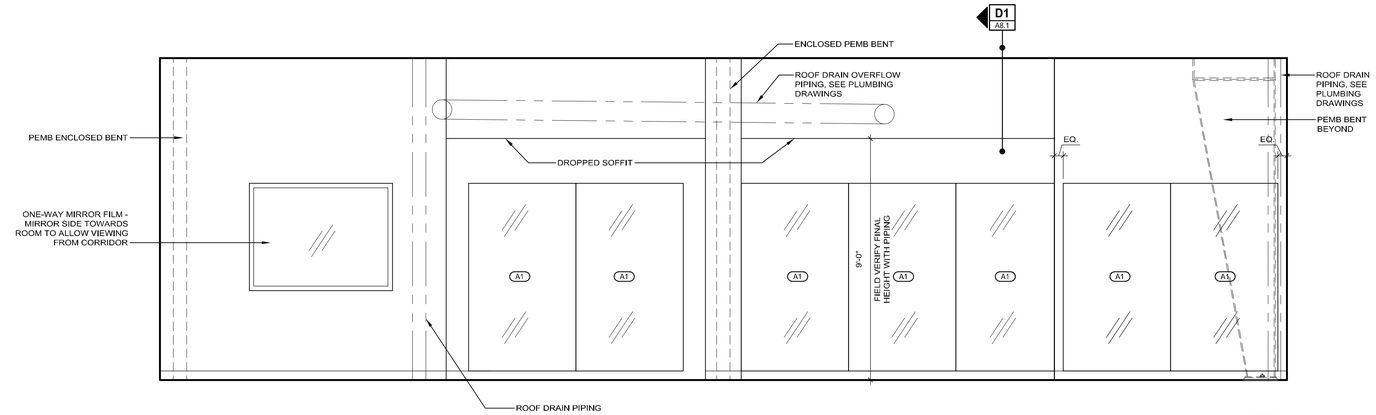

WEST WALL 3

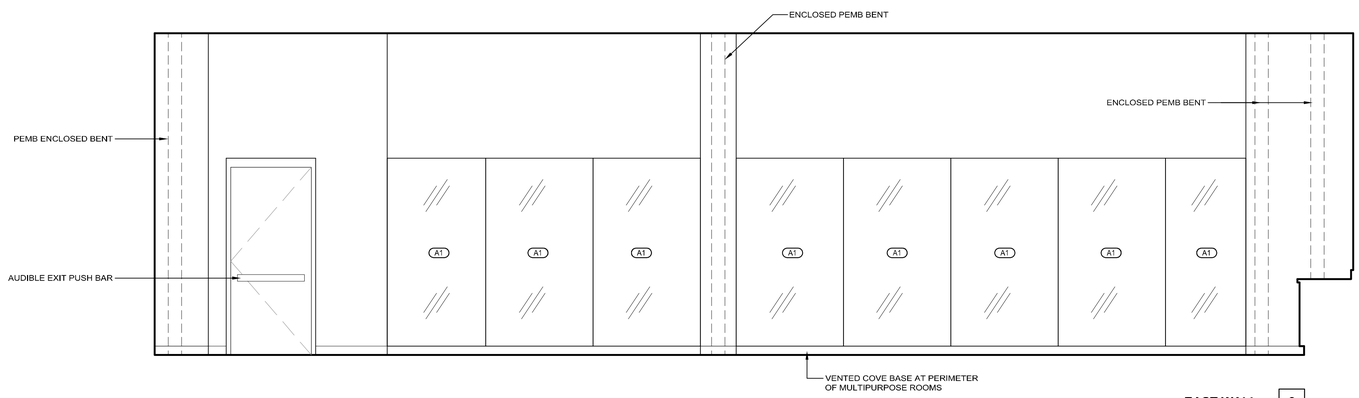

EAST WALL 2

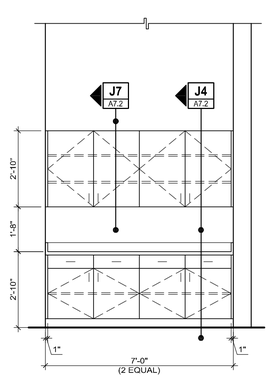

TRAINING BOX 130 A12 3/8"=1'

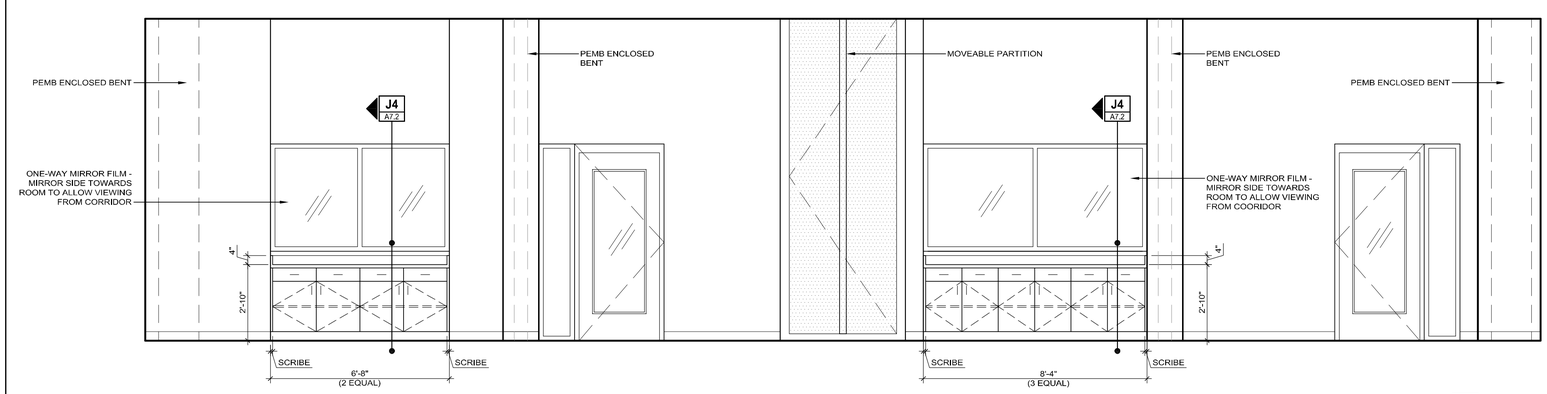

NORTH WALL 1

MULTI-PURPOSE ROOM A 140 & MULTI-PURPOSE ROOM B 141 A1 3/8"=1'

FleischmanGarcia
ARCHITECTURE · PLANNING · INTERIOR DESIGN
TAMPA OFFICE
SAFETY HARBOR OFFICE
555 EIGHTH AVENUE NORTH
SAINT PETERSBURG, FLORIDA 33705
PHONE (727) 822-4600
FAX (727) 822-5600
3304 HYDE PARK AVENUE, SUITE 300
TAMPA, FLORIDA 33629
PHONE (813) 251-4400
FAX (813) 251-4488
5967 CAYTA LAUREN LANE, SUITE E
ORLANDO, FLORIDA 32822
PHONE (407) 382-6252
FAX (407) 382-6253
REGISTRATION NUMBER AA C000123

NEW TAMPA RECREATION CENTER ADDITION

TAMPA, FL 33647

THE DESIGN AND DRAWING IS THE SOLE PROPERTY OF FLEISCHMAN/GARCIA, INC. AND MAY NOT BE USED IN WHOLE OR PART, IT IS WRONG TO BE REPRODUCED WITHOUT PERMISSION OR REMOVED FROM THE PREMISES WITHOUT PERMISSION OF FLEISCHMAN/GARCIA

I CERTIFY TO THE BEST OF MY KNOWLEDGE THAT THESE DRAWINGS COMPLY W/ ALL RELEVANT BUILDING CODES

FGA PROJECT NUMBER
18015

ISSUE DATE
11/07/18

REVISIONS
1 DATE: -
2 DATE: -
3 DATE: -
4 DATE: -

SHEET NUMBER
A7.1

12-19-18 Kathleen Prop#:2018\18015_NTRC addition\Drawings\SHEETS\18015_A7.1-2.dwg

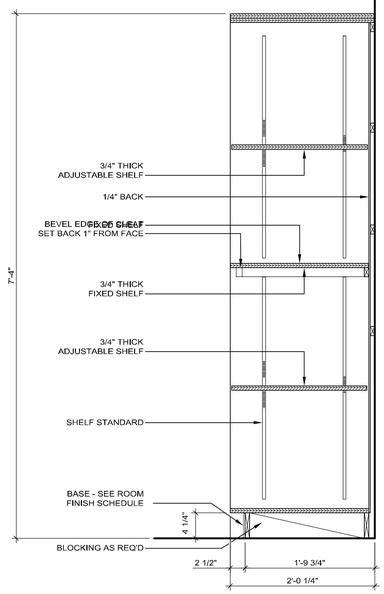

CASEWORK SECTION G13 1"=1'

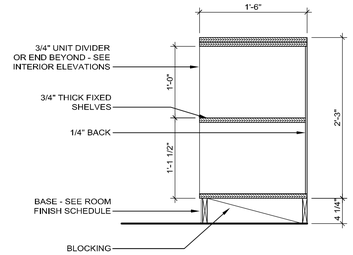

CUBBIES SECTION J10 1"=1'

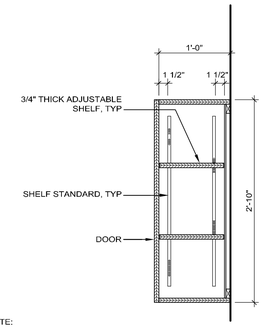

NOTE:
PROVIDE PLASTIC LAMINATE ON ALL EXPOSED SURFACES, TYP

WALL CABINET SECTION J7 1"=1'

NOTE: PROVIDE LOCKS FOR CABINETS AND DRAWERS

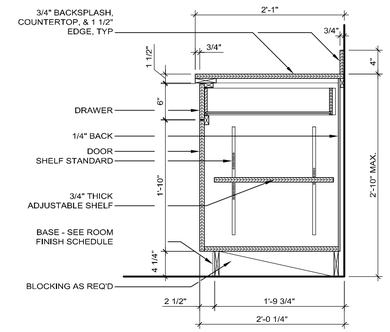

BASE CABINET SECTION J4 1"=1'

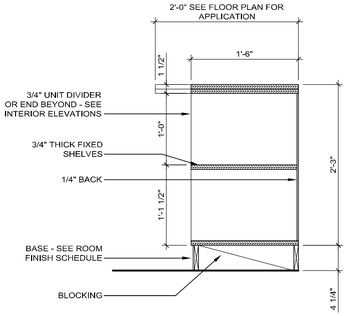

CUBBIES SECTION J1 1"=1'

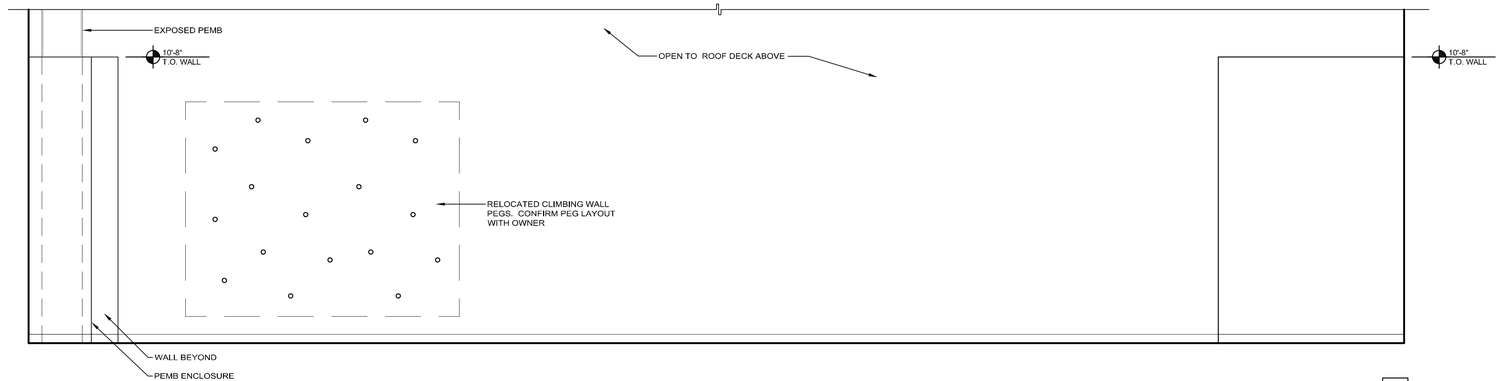

2

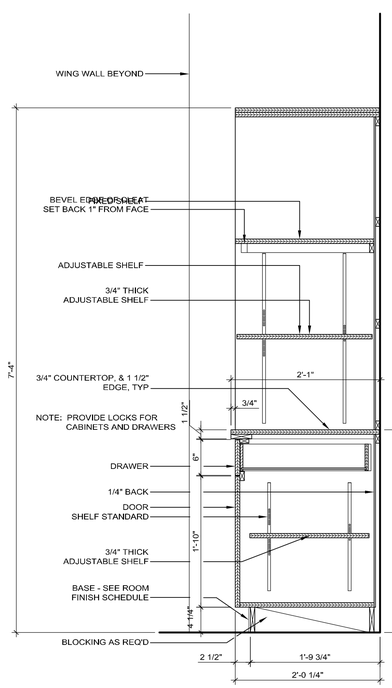

CASEWORK SECTION A13 1"=1'

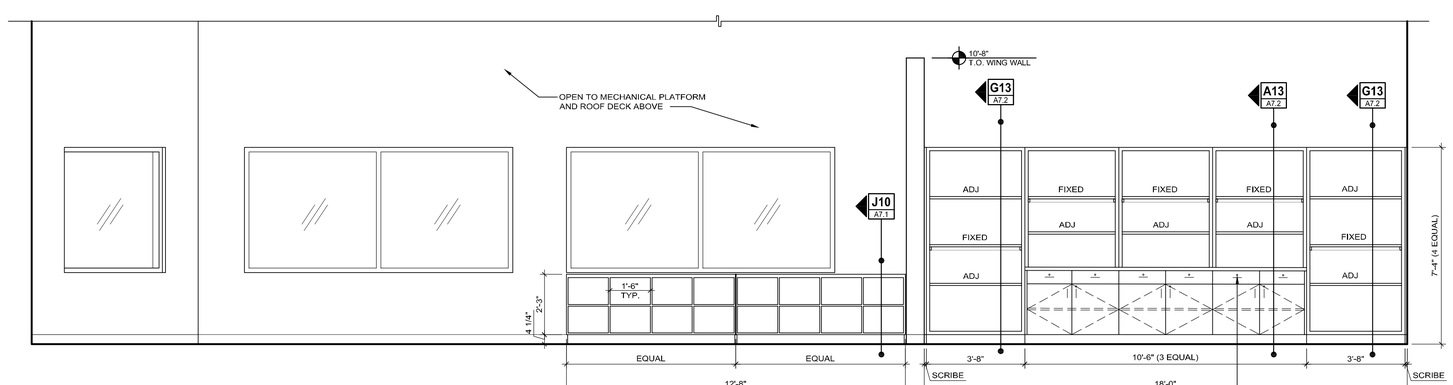

1

PRESCHOOL GYM 137 A1 3/8"=1'

FleischmanGarcia
ARCHITECTURE · PLANNING · INTERIOR DESIGN
TAMPA OFFICE
334 INVERNESS AVENUE, SUITE 300
TAMPA, FL 33602
PHONE: (813) 221-4460
FAX: (813) 221-4466
REGISTRATION NUMBER AA C000123
ORLANDO OFFICE
5967 CATH LEEN LANE, SUITE 6
ORLANDO, FL 32822
PHONE: (941) 342-6293
FAX: (941) 342-6293
SAFETY HARBOR OFFICE
595 PINOCHIO AVENUE, NORTH
SAFETY HARBOR, FL 34695
PHONE: (727) 726-8080
FAX: (727) 726-9066

NEW TAMPA RECREATION CENTER ADDITION

TAMPA, FL 33647

THIS DESIGN AND DRAWING IS THE SOLE PROPERTY OF FLEISCHMAN/GARCIA, INC. AND MAY NOT BE REPRODUCED WITHOUT WRITTEN PERMISSION FROM FLEISCHMAN/GARCIA

I CERTIFY TO THE BEST OF MY KNOWLEDGE THAT THESE DRAWINGS COMPLY WITH ALL RELEVANT BUILDING CODES

FGA PROJECT NUMBER
18015

ISSUE DATE
11/07/18

REVISIONS
1 DATE: -
2 DATE: -
3 DATE: -
4 DATE: -

SHEET NUMBER
A7.2

12-19-18 Kathleen Pugh P:\2018\18015_NTRC addition\Drawings\SHEETS\18015_A7.1-2.dwg

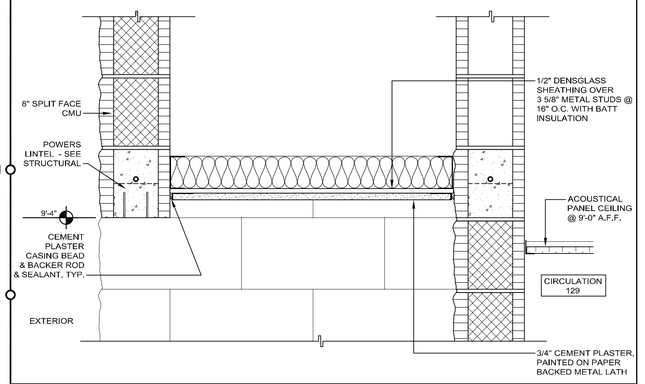

GYPSUM BOARD CEILING DETAIL K12 1 1/2"=1'

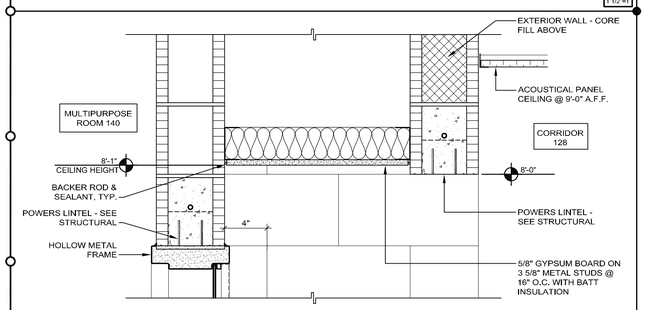

GYPSUM BOARD CEILING DETAIL G12 1 1/2"=1'

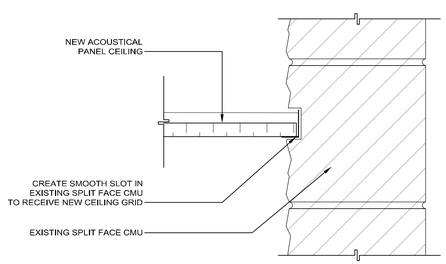

CEILING GRID @ EXISTING SPLIT FACE CMU DETAIL D12 3"=1'-0"

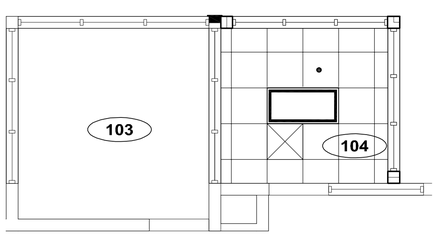

REFLECTED CEILING PLAN @ OFFICE 104 A12 1/4"=1'

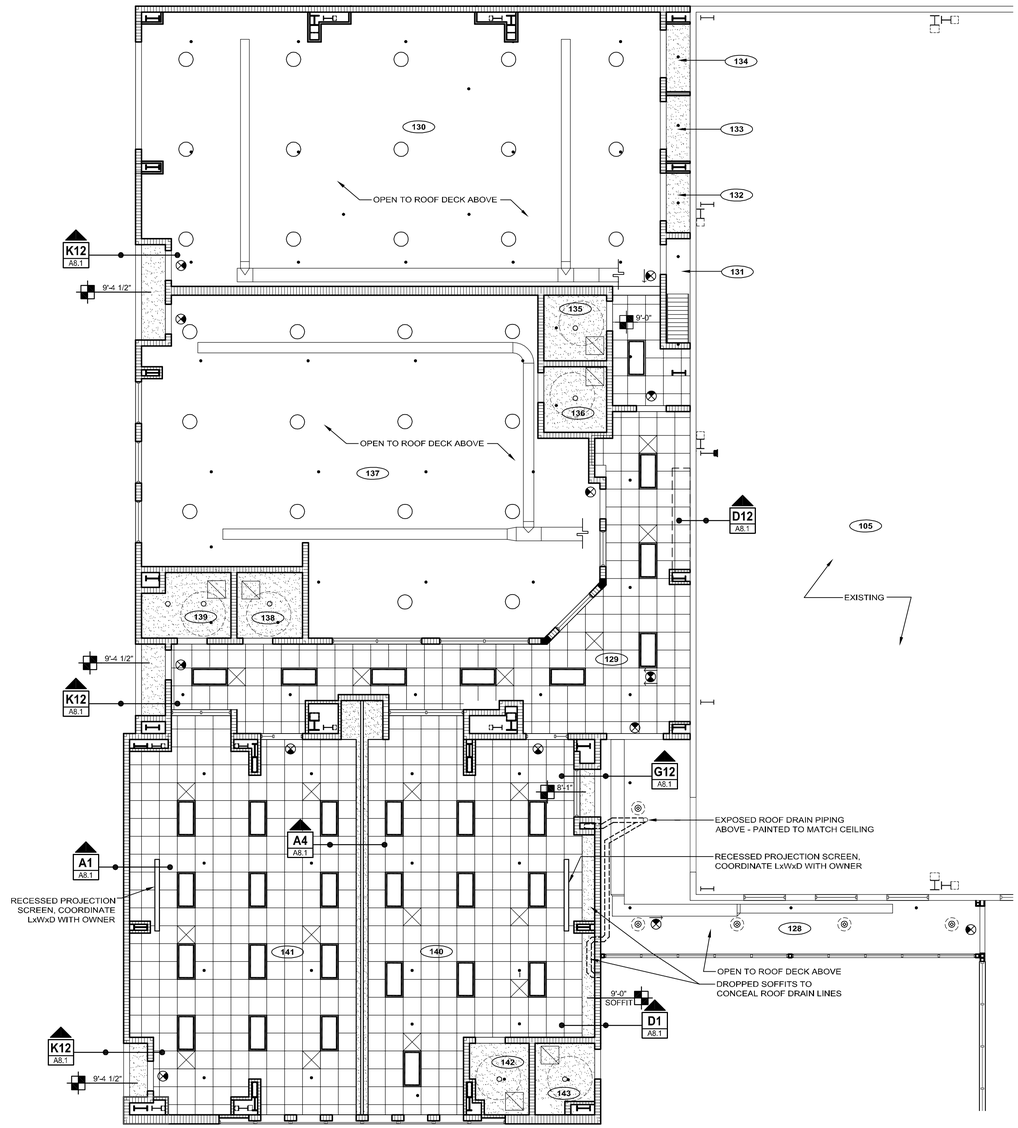

REFLECTED CEILING PLAN A7 1/8"=1'

ACOUSTICAL PANEL CEILING

GYPSUM BOARD CEILING

15'-0" CEILING HEIGHT ABOVE FINISH FLOOR

2' X 4' FLUORESCENT LIGHT FIXTURE

RECESSED LIGHT FIXTURE

PENDANT LIGHT FIXTURE

SPRINKLER HEAD

MECHANICAL GRILL

CEILING MOUNTED LIGHT

REFLECTED CEILING PLAN LEGEND J1 NTS

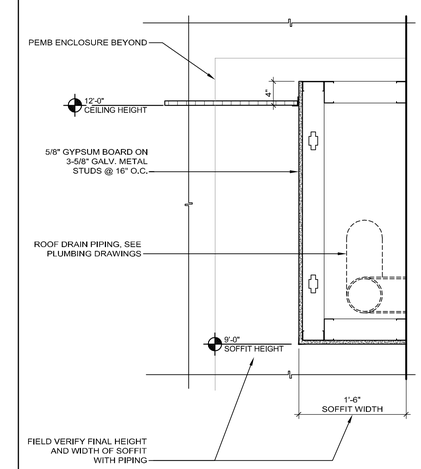

DROPPED SOFFIT DETAIL D1 1"=1'

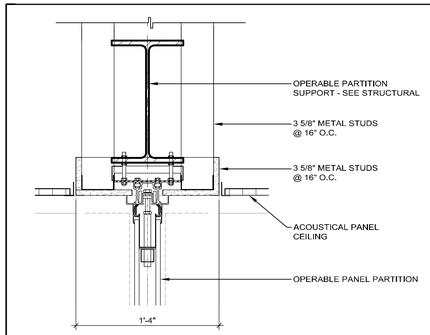

OPERABLE PARTITION DETAIL A4 1 1/2"=1'

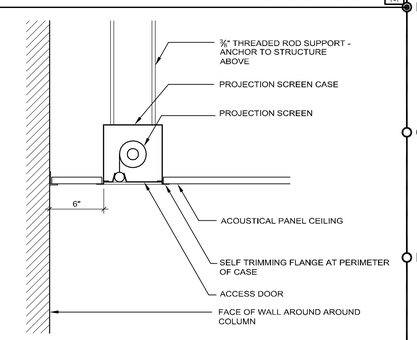

PROJECTION SCREEN DETAIL A1 1 1/2"=1'

FleischmanGarcia
ARCHITECTURE · PLANNING · INTERIOR DESIGN
SAINT PETERSBURG OFFICE
535 FOURTH AVENUE NORTH
ST. PETERSBURG, FLORIDA 33705
PHONE (727) 726-5800
FAX (727) 726-5900
TAMPA OFFICE
324 HYDE PARK AVENUE, SUITE 350
TAMPA, FLORIDA 33606
PHONE (813) 251-4460
FAX (813) 251-4465
ORLANDO OFFICE
5967 CATH LAKE LANE, SUITE 6
ORLANDO, FLORIDA 32822
PHONE (941) 342-6292
FAX (941) 342-6293
REGISTRATION NUMBER AA C000123

NEW TAMPA RECREATION CENTER ADDITION

TAMPA, FL 33647

THE DESIGN AND DRAWING IS THE SOLE PROPERTY OF FLEISCHMAN-GARCIA, INC. THE DESIGN AND DRAWING MAY NOT BE REPRODUCED WITHOUT WRITTEN PERMISSION FROM FLEISCHMAN-GARCIA

I CERTIFY TO THE BEST OF MY KNOWLEDGE THAT THESE DRAWINGS COMPLY WITH ALL RELEVANT BUILDING CODES

FGA PROJECT NUMBER
18015

ISSUE DATE
11/07/18

REVISIONS
1 DATE: -
2 DATE: -
3 DATE: -
4 DATE: -

SHEET NUMBER
A8.1

11-29-18 Duane Wright P:\2018\18015_NTRC addition\Drawings\SHEETS\18015_A8.1.dwg

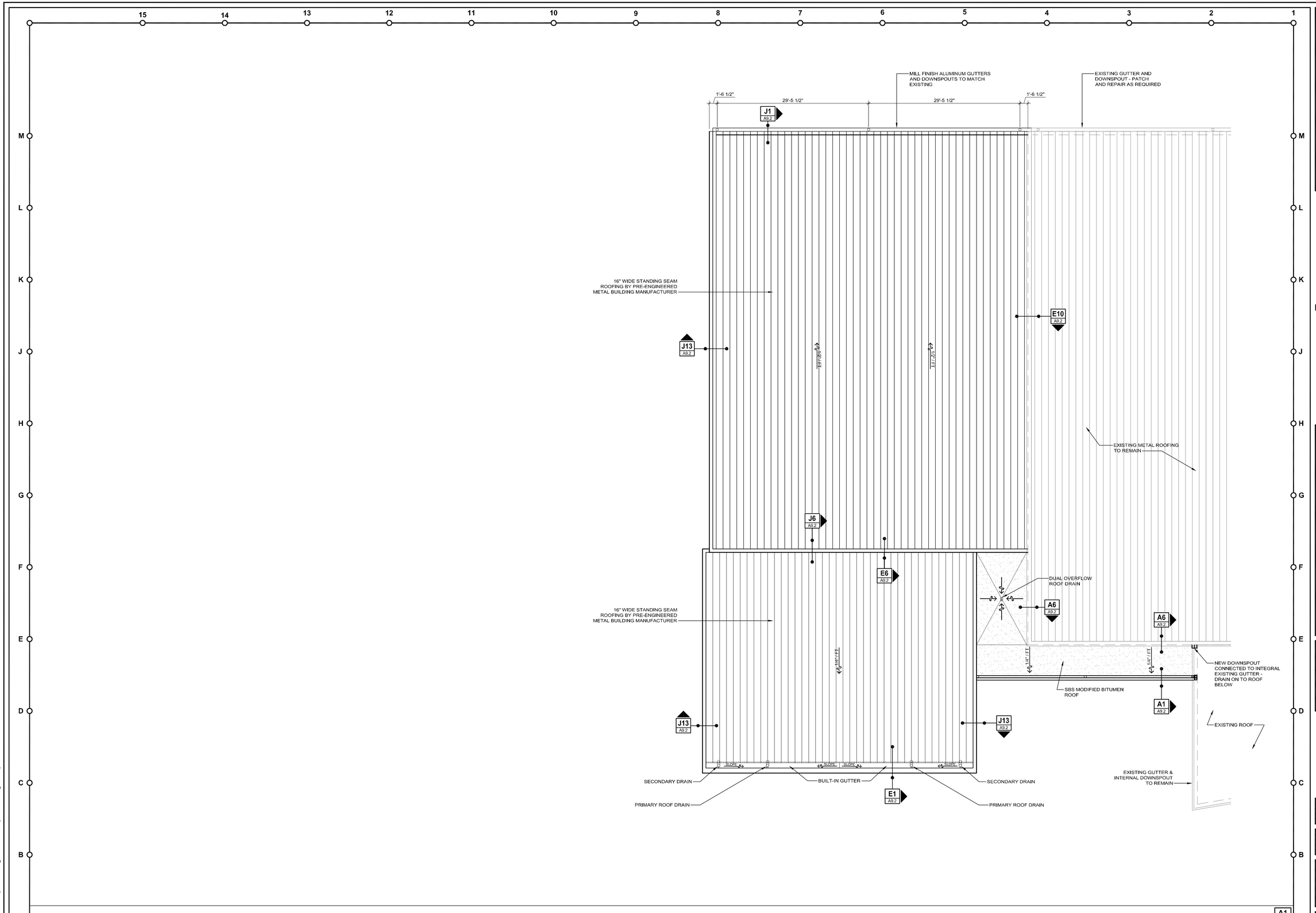

FleischmanGarcia
ARCHITECTURE · PLANNING · INTERIOR DESIGN
SAFETY HARBOR OFFICE
1915 FOURTH AVENUE NORTH
SAINT PETERSBURG, FLORIDA 33605
PHONE (727) 823-5800
FAX (727) 823-5666

TAMPA OFFICE
3324 HYDE PARK AVENUE, SUITE 300
TAMPA, FLORIDA 33629
PHONE (813) 217-6460
FAX (813) 217-6464

ORLANDO OFFICE
5967 CATH LORIN LANE, SUITE 6
ORLANDO, FLORIDA 32822
PHONE (941) 342-6529
FAX (941) 342-6523

REGISTRATION NUMBER AA C000123

NEW TAMPA RECREATION CENTER ADDITION

TAMPA, FL 33647

THE DESIGN AND DRAWING IS THE SOLE PROPERTY OF FLEISCHMANGARCIA. NO PART OF THIS DESIGN MAY BE REPRODUCED WITHOUT PRIOR WRITTEN CONSENT FROM FLEISCHMANGARCIA

I CERTIFY TO THE BEST OF MY KNOWLEDGE THAT THESE DRAWINGS COMPLY WITH ALL RELEVANT BUILDING CODES

FGA PROJECT NUMBER
18015

ISSUE DATE
11/07/18

REVISIONS
1 DATE: -
2 DATE: -
3 DATE: -
4 DATE: -

SHEET NUMBER
A9.1

Duane Wright P:\2018\18015_NTRC addition\Drawings\SHEETS\18015_A9.1-2.dwg
11-30-18

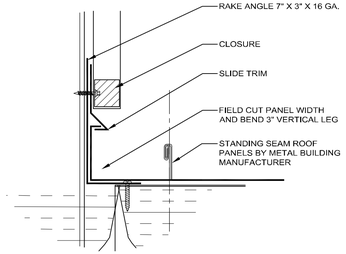

FLASHING DETAIL K13 (3=1')

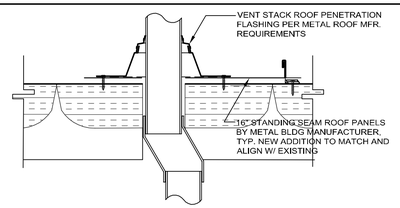

PIPE PENETRATION FLASHING H13 (1 1/2"=1')

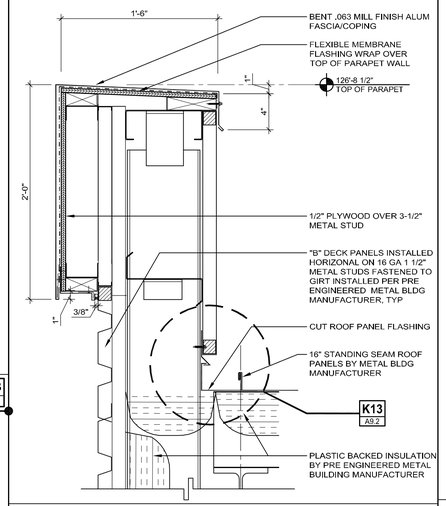

ROOF PARAPET FLASHING J13 (1 1/2"=1')

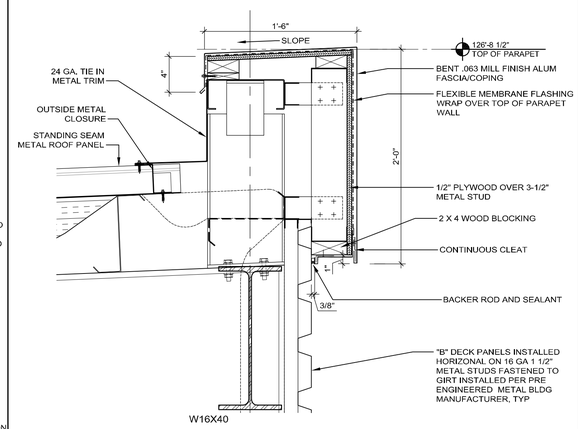

FASCIA DETAIL J6 (1 1/2"=1')

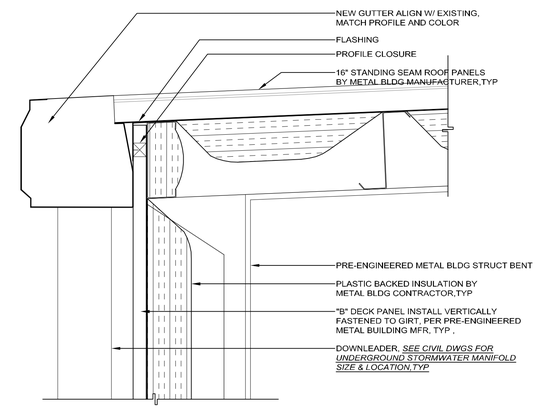

EAVE / GUTTER DETAIL J1 (1 1/2"=1')

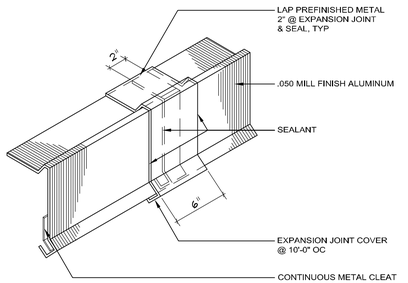

EDGE FLASHING JOINT E13 (1 1/2"=1')

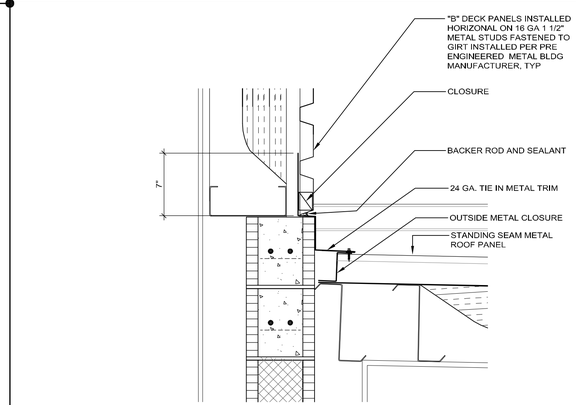

LOW ROOF FLASHING DETAIL E6 (1 1/2"=1')

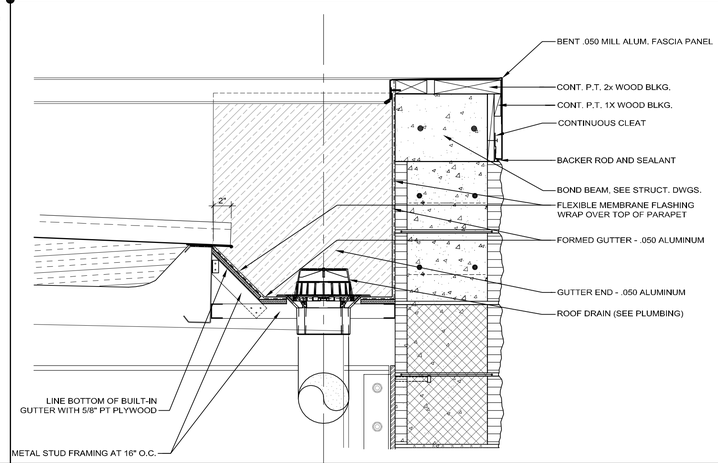

BUILT-IN GUTTER DETAIL E1 (1 1/2"=1')

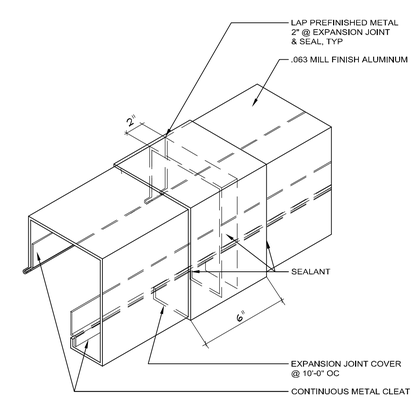

CAP FLASHING JOINT A13 (1 1/2"=1')

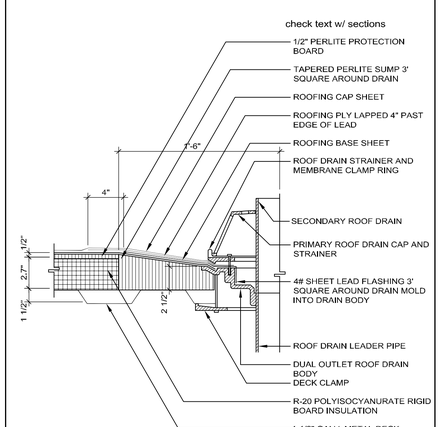

ROOF / OVERFLOW DRAIN A10 (1 1/2"=1')

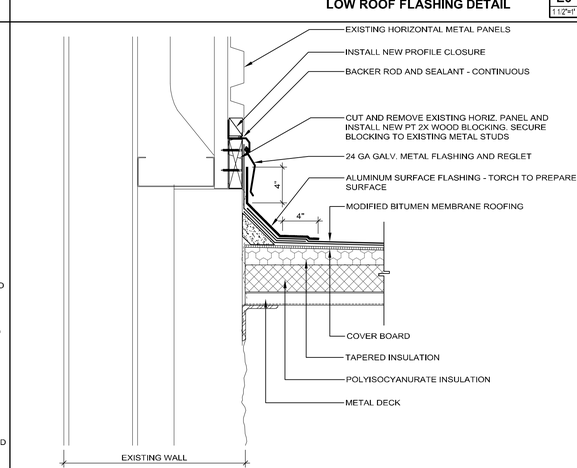

ROOF / WALL FLASHING A6 (1 1/2"=1')

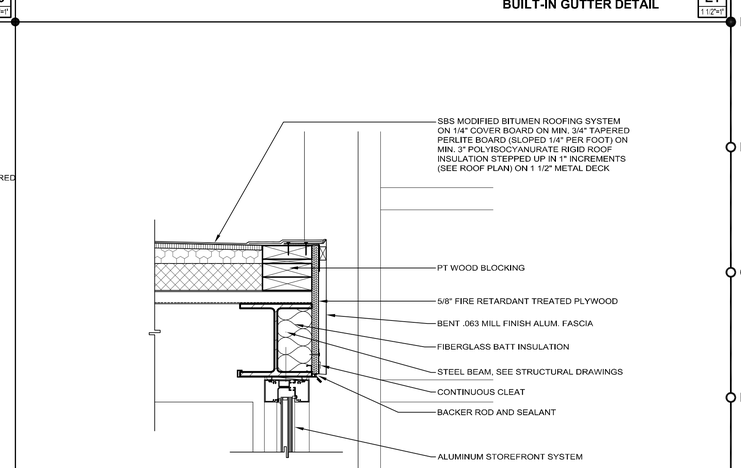

FASCIA DETAIL A1 (1 1/2"=1')

FleischmanGarcia
ARCHITECTURE · PLANNING · INTERIOR DESIGN
SAINT PETERSBURG OFFICE
193 FOURTH AVENUE NORTH
SAINT PETERSBURG, FLORIDA 33705
PHONE (727) 823-5800
FAX (727) 822-9060
TAMPA OFFICE
324 HYDE PARK AVENUE, SUITE 350
TAMPA, FLORIDA 33606
PHONE (813) 251-4460
FAX (813) 251-4466
REGISTRATION NUMBER AA C000123
5967 CLYDE LAMPA LANE, SUITE G
ORLANDO, FLORIDA 32822
PHONE (941) 342-6293
FAX (941) 342-6293

NEW TAMPA RECREATION CENTER ADDITION

TAMPA, FL 33647

THE DESIGN AND DRAWING IS THE SOLE PROPERTY OF FLEISCHMAN/GARCIA, INC. AND MAY NOT BE REPRODUCED WITHOUT PRIOR WRITTEN CONSENT FROM FLEISCHMAN/GARCIA, INC.

I CERTIFY TO THE BEST OF MY KNOWLEDGE THAT THESE DRAWINGS COMPLY W/ ALL RELEVANT BUILDING CODES

FGA PROJECT NUMBER
18015

ISSUE DATE
11/07/18

REVISIONS
1 DATE: -
2 DATE: -
3 DATE: -
4 DATE: -

SHEET NUMBER
A9.2

11-30-18 Duane Wright P:\2018\18015_NTRC addition\Drawings\SHEETS\18015_A9.1-2.dwg

GENERAL STRUCTURAL NOTES

GENERAL NOTES:

1. CONTRACTOR IS RESPONSIBLE FOR AND SHALL VERIFY AND COORDINATE ALL DIMENSIONS AND DETAILS BEFORE PROCEEDING WITH WORK. ANY DISCREPANCIES SHALL BE BROUGHT TO THE IMMEDIATE ATTENTION OF THE ARCHITECT AND ENGINEERS.
2. DETAILS SHOWN IN ANY SECTION APPLY TO ALL SIMILAR SECTIONS AND CONDITIONS UNLESS NOTED OTHERWISE.
3. CONTRACTOR SHALL FULLY BRACE AND OTHERWISE PROTECT ALL WORK IN PROGRESS UNTIL THE BUILDING IS COMPLETED.
4. ALL STRUCTURAL ITEMS FOR THIS PROJECT HAVE BEEN DESIGNED IN ACCORDANCE WITH APPROPRIATE PROVISIONS OF EACH OF THE FOLLOWING:
   - A. THE FLORIDA BUILDING CODE, (SIXTH EDITION) 2017.
   - B. ACI STANDARD 318–14 BUILDING CODE REQUIREMENTS FOR REINFORCED CONCRETE.
   - C. BUILDING CODE REQUIREMENTS FOR MASONRY STRUCTURES (ACI 530–13/ASCE 5–13/TMS 402–16).
   - D. AISC "SPECIFICATION FOR THE DESIGN, FABRICATION AND ERECTION OF STRUCTURAL STEEL FOR BUILDINGS" 360–10.
   - E. ASCE 7–10 (WITH ERRATA DATED JANUARY 11, 2011) "MINIMUM DESIGN LOADS FOR BUILDINGS AND OTHER STRUCTURES".
5. THE STRUCTURAL DRAWINGS SHALL BE USED IN CONJUNCTION WITH THE SPECIFICATIONS AND THE ARCHITECTURAL AND MECHANICAL DRAWINGS. IF THERE IS A DISCREPANCY BETWEEN DRAWINGS, IT IS THE CONTRACTOR'S RESPONSIBILITY TO NOTIFY THE ARCHITECT PRIOR TO PERFORMING WORK. IN CASE OF CONFLICT THE MOST STRINGENT CONDITION SHALL APPLY.
5. ALL DIMENSIONS MUST BE COORDINATED WITH ARCHITECTURAL DRAWINGS AND WITH EQUIPMENT MANUFACTURER (I.E. WINDOW, DOOR, AIR HANDLER, ETC.). CONTRACTOR MUST OBTAIN AN ARCHITECTURAL DIRECTIVE IN CASE OF ANY CONFLICT. <u>REFER TO ARCHITECTURAL DRAWINGS FOR DIMENSIONS NOT SHOWN IN STRUCTURAL DRAWINGS.</u>
6. <u>ROOFTOP EQUIPMENT ANCHORAGE & OUTDOOR RACK MOUNTED EQUIPMENT ANCHORAGE.</u> ALL ROOF TOP EQUIPMENT CURBS, ROOF TOP MECHANICAL EQUIPMENT, EQUIPMENT TIE DOWNS, AND CONNECTIONS OF ALL EQUIPMENT TO OUTDOOR RACKS OR BUILDING STRUCTURE FOR WIND LOADING ARE TO BE DESIGNED AND ENGINEERED BY A REGISTERED SPECIALTY ENGINEER RETAINED BY THE MECHANICAL EQUIPMENT SUPPLIER. SIGNED AND SEALED DRAWINGS AND CALCULATIONS ARE TO BE SUBMITTED TO THE ENGINEER OF RECORD FOR REVIEW AND APPROVAL. THE EQUIPMENT MANUFACTURER SHALL PROVIDE THE ATTACHMENT OF THE UNIT TO THE STRUCTURE AND SUBMIT TO THE ENGINEER LOADS, LOCATIONS, AND METHODS OF ATTACHMENT. THE STRUCTURAL ENGINEER WILL MAKE PROVISIONS IN THE DESIGN OF THE PRIMARY STRUCTURAL FRAME TO ACCOMMODATE THE LOADS AND ATTACHMENTS SUBMITTED BY THE MANUFACTURER.

FOUNDATION NOTES:

1. SITE SOIL FOR THIS PROJECT HAS BEEN INVESTIGATED BY THE FIRM OF MC SQUARED, INC. AND FOUND, AS PRESENTED IN THEIR REPORT DATED NOVEMBER 15, 2012, SUITABLE TO SUPPORT 2.5 KSF SPREAD FOOTINGS. FOUNDATIONS HAVE BEEN DESIGNED IN ACCORDANCE WITH THE ABOVE STATED CRITERIA.
2. FILL AND SUBGRADE PREPARATION SHALL BE IN ACCORDANCE WITH THE GEOTECHNICAL ENGINEER RECOMMENDATION AS CONTAINED IN THEIR REPORT STATED IN ITEM 1.
3. ALL COLUMN FOOTINGS SHALL BE CENTERED UNDER COLUMN CENTERLINES UNLESS OTHERWISE NOTED.
4. BACKFILLING AGAINST FOUNDATION WALLS SHALL BE DONE CAREFULLY WITH SMALL COMPACTION EQUIPMENT, AFTER SLABS ON GROUND ARE IN PLACE AND CONCRETE HAS SET. NO TRUCKS, BULLDOZERS, ETC. SHALL BE ALLOWED CLOSER THAN 6'–0" TO ANY FOUNDATION WALL. ANY WALL 3'–0" OR HIGHER MUST BE BRACED DURING THE CONSTRUCTION PROCESS.
5. NO FOUNDATIONS SHALL BE PLACED ABOVE 1 VERTICAL ON 2 HORIZONTAL SLOPES EXTENDED FROM THE CLOSEST EDGE OF ANY UNDISTURBED SOIL OR OTHER FOUNDATION STRUCTURE. BOTTOM OF FOOTINGS SHALL NOT BE LESS THAN 1'–0" BELOW EXISTING GRADE (U.N.O.).
6. FOR FOUNDATIONS SIZE AND REINFORCING SEE SCHEDULE.
7. ELEVATOR PIT DIMENSIONS = VERIFY WITH ELEVATOR MANUFACTURERS APPROVED SHOP DRAWINGS.
8. WATER PROOFING MATERIALS SHALL BE PROVIDED ON ALL SIDES AND BOTTOM OF ELEVATOR CORE AND ESCALATOR PIT.
9. CONTRACTOR SHALL TREAT SOIL BENEATH BUILDING FOR TERMITES.

CONCRETE AND REINFORCING:

1. ALL CONCRETE WORK SHALL CONFORM TO THE LATEST ACI "BUILDING CODE REQUIREMENTS FOR REINFORCED CONCRETE, ACI–318".
2. ALL CONCRETE SHALL HAVE A MINIMUM 28–DAY COMPRESSIVE STRENGTH AS INDICATED BELOW:

CONCRETE STRENGTH	MAX WATER CEMENT RATIO	TYPE AGGREGATE	LOCATION USED
4000 PSI	0.45	STONE	CONCRETE U.N.O.
3000 PSI	0.52	STONE	SLAB ON GRADE

3. ALL REINFORCING STEEL SHALL BE INTERMEDIATE GRADE, NEW BILLET STEEL, DEFORMED BARS, CONFORMING TO ASTM A–615, GRADE 60. ALL BARS SHALL BE SECURELY SUPPORTED AND WIRED IN PLACE. PRIOR TO POURING CONCRETE. ALL REINFORCING STEEL TO BE WELDED SHALL CONFORM TO ASTM A–706.
4. ALL WELDED WIRE FABRIC (W.W.F.) IN FLAT SHEETS ONLY AND SHALL CONFORM TO ASTM A–185.
5. UNLESS NOTED, ALL BARS MARKED CONTINUOUS SHALL BE SPLICED AT ALL LAP POINTS AND CORNERS AND DEVELOPED AT NON–CONTINUOUS ENDS AS PER TYPICAL DETAILS. SPLICE CONTINUOUS TOP BARS AT CENTER BETWEEN SUPPORTS AND SPLICE CONTINUOUS BOTTOM BARS AT SUPPORTS.
6. CONCRETE COVER FOR REINFORCING BARS SHOWN IN TYPICAL DETAILS.
7. UNLESS NOTED MINIMUM, TEMPERATURE REINFORCING (ASTM A–615/A–60) TO BE 0.0018 X CONCRETE AREA.
8. PROVIDE #4 @ 12" O.C., WITH STANDARD HOOK, TOP BARS IN ALL SLABS AT DISCONTINUOUS ENDS UNLESS OTHERWISE NOTED ON PLANS. LENGTH OF BARS 1/4 OF SPAN, MINIMUM 3'–0". UNLESS OTHERWISE NOTED PROVIDE #4 @ 12" O.C IN ALL CANTILEVERS. BAR LENGTH SHALL BE CANTILEVER SPAN PLUS 10'–0" PLUS STANDARD HOOK AT CANTILEVER ENDS.
9. WHERE PIPE SLEEVES (UP TO 2" IN DIAMETER) PASS THROUGH CONCRETE BEAMS, PROVIDE ADDITIONAL STIRRUP EACH SIDE OF SLEEVE, SLEEVES FOR PIPES 2" IN DIAMETER OR LARGER MUST BE STEEL OR CAST IRON, AND THE LOCATION MUST BE APPROVED BY THE STRUCTURAL ENGINEER.
10. ALL CONSTRUCTION JOINTS SHALL BE THOROUGHLY CLEANED JUST BEFORE PLACING NEW CONCRETE IN ACCORDANCE WITH THE BUILDING CODE.
11. FOR CHAMFER OF EXPOSED CORNERS OF BEAMS AND/OR COLUMNS, SEE ARCHITECTURAL DRAWINGS.
12. CONTRACTOR SHALL COORDINATE PLACEMENT OF, OR BOX OUT FOR, ALL PIPE SLEEVES, OPENINGS, ETC, REQUIRED FOR VARIOUS TRADES.
13. CONTRACTOR SHALL COORDINATE AND NOTIFY OTHER TRADES IN SUFFICIENT TIME TO ALLOW THEM TO SET ANCHORS, INSERTS, BOLTS, HANGERS, ETC., AS REQUIRED FOR THEIR USE.
14. SEE ARCHITECTURAL DRAWINGS FOR DETAILS OF FLASHING REGLETS, FASCIA DETAILS, ETC.
15. UNDER NO CIRCUMSTANCES SHALL CONCRETE BE PUMPED THROUGH ALUMINUM PIPES. CONCRETE SHALL NOT BE PLACED IN CONTACT WITH ALUMINUM, ALUMINUM MIXING DRUMS, TRUCK MIXERS, BUGGIES, CHUTES, CONVEYORS, TREMIE PIPES, AND OTHER EQUIPMENT MADE OF ALUMINUM SHALL NOT BE USED ON THIS PROJECT.
16. SLUMPS OF OVER 4 INCHES WILL NOT BE PERMITTED UNLESS THE HRWR ADMIXTURE (SUPER PLASTICIZER) IS USED. MAXIMUM SLUMP IS THEN 8 INCHES UNLESS OTHERWISE DIRECTED BY THE ENGINEER.
17. NO ADMIXTURE SHALL BE USED IN CONCRETE EXCEPT WITH THE PERMISSION OF THE ENGINEERS AND AFTER LABORATORY DESIGN MIX APPROVAL. ALL ADMIXTURES SHALL CONTAIN NO MORE CHLORIDE IONS THAN ARE PRESENT IN MUNICIPAL DRINKING WATER.
18. WATER REDUCING ADMIXTURE SHALL CONFORM TO THE ASTM C–494, TYPE A, AND SHALL BE USED IN ALL CONCRETE.
19. AIR ENTRAINING ADMIXTURE SHALL CONFORM TO ASTM C260. AIR CONTENT OF CONCRETE SHALL BE USED AS FOLLOWS:
   - A. FOR CONCRETE EXPOSED TO SOIL AND/OR WEATHER, 5%.
   - B. FOR INTERIOR WALLS, COLUMNS, AND SLABS, 3%.
20. FLY ASH – ASTMC618–12A, TYPE C OR TYPE F SHOULD BE USED BUT NOT TO EXCEED 20% CEMENTITIOUS CONTENT.
21. ALL EXPOSED CONCRETE SLABS SHALL RECEIVE A CURING COMPOUND. THE CURING COMPOUND SHALL CONFORM TO ASTM C309 AND SHALL HAVE 30% SOLIDS MINIMUM. WATER/BLANKET CURING AS PER ACI RECOMMENDATION MAY BE USED AS ALTERNATE.

MASONRY:

1. DESIGN AND CONSTRUCTION SHALL CONFORM TO BUILDING CODE REQUIREMENTS FOR MASONRY STRUCTURES (ACI 530–13 ASCE 7–10) / TMS 402–116 AND SPECIFICATIONS FOR MASONRY STRUCTURES ACI 530.1–13 / ASCE 7–10 (WITH ERRATA DATED JANUARY 10, 2011.
2. MINIMUM NET COMPRESSIVE STRENGTH OF BLOCK ASSEMBLY SHALL BE 2000 P.S.I. (f'm) MORTAR FOR MASONRY SHALL BE TYPE "S" OR "M".
3. FOR ALL EXTERIOR AND INTERIOR BEARING, BED JOINTS ARE TO COVER 100% OF THE MASONRY SURFACES AND ALL HEAD JOINTS ARE TO COVER 100% OF THE PROJECTED AREA OF THE FACE SHELLS.
4. FILL ALL CELLS AS REQUIRED WITH 3000 P.S.I. GROUT. SLUMP SHALL BE 8 TO 11 INCHES. SUBMIT DESIGN MIX FOR APPROVAL.
5. MINIMUM HORIZONTAL JOINT REINFORCING SHALL BE 9 GAGE HOT DIP GALVANIZED TRUSS OR LADDER TYPE JOINT REINFORCING AT 16" O.C., PROVIDE MANUFACTURE "T" AND "L" SHAPES FOR INTERSECTIONS AND CORNERS, (MINIMUM LAP 8").
6. MINIMUM VERTICAL REINFORCING SHALL BE 1–#5 @ 48" OR 1–#4 @ 32" O.C., (U.N.O.).
7. PROVIDE ADDITIONAL VERTICAL REINFORCING BAR AT EVERY CORNER, INTERSECTION, CONTROL JOINT, AND OPENING EDGES (U.N.O.).
8. MINIMUM SPLICE FOR VERTICAL REINFORCING IS SHOWN IN DETAIL 4–023, SPLICE FOR HORIZONTAL JOINT REINFORCING = 12".
9. WALLS ARE DESIGNED TO BE BRACED BY FLOOR OR ROOF MEMBERS, CONTRACTOR SHALL PROVIDE TEMPORARY BRACING DURING CONSTRUCTION.
10. ALL CELLS BELOW FIRST FLOOR FINISHED ELEVATION MUST BE FULLY GROUT FILLED.
11. ALL KNOCK OUT BLOCK HORIZONTAL BARS SHALL HAVE CORNER BARS AT ALL CORNERS AND WALL INTERSECTIONS. SIZE AND NUMBER OF CORNER BARS SHALL BE SAME AS HORIZONTAL BARS.
12. ALL INTERSECTING WALLS AND CORNER WALLS SHALL BE LAID IN AN OVERLAPPING MASONRY BONDING PATTERN, WITH ALTERNATE UNITS HAVING A BEARING OF NOT LESS THAN 3 INCHES ON UNIT BELOW.

STRUCTURAL STEEL:

1. ALL STRUCTURAL STEEL WORK SHALL BE FABRICATED AND ERECTED IN ACCORDANCE WITH THE LATEST A.I.S.C. SPECIFICATIONS.
2. STRUCTURAL STEEL SHALL CONFORM TO:

WIDE FLANGE (WF)	ASTM A992/A (50 KSI)
SHAPES (L,T,C,PL)	ASTM A36/A
STRUCTURAL TUBE (HSS)	ASTM A500 (46 KSI)
STEEL PIPE (HSS)	ASTM A500 (42 KSI)
ANCHOR BOLTS	ASTM F1554 (36 KSI) U.N.O. IN PLANS, OR SECTIONS.
FRAMING BOLTS	ASTM A325–94 OR A490–93
SHEAR STUDS	ASTM A108
WELDING ELECTRODES	E70XX

3. ALL HIGH STRENGTH BOLTS SHALL CONFORM TO ASTM SPECIFICATION A325 AND SHALL BE PROVIDED WITH HARDENED WASHERS UNDER THE TURNED ELEMENT (NUT OR BOLT HEAD).
4. INSTALLATION AND TIGHTENING OF ALL HIGH STRENGTH BOLTS SHALL CONFORM TO THE "SPECIFICATION FOR STRUCTURAL JOINTS USING ASTM A325 OR A490 BOLTS".
5. SHOP CONNECTIONS MAY BE WELDED OR HIGH STRENGTH BOLTED. ALL BOLTS SHALL BE 3/4" DIAMETER MINIMUM. ALL CONNECTIONS SHALL CONFORM TO THE TYPICAL CONNECTION DETAILS SHOWN ON THE PLANS UNLESS SPECIFICALLY APPROVED BY THE ENGINEER.
6. ALL FIELD CONNECTIONS SHALL BE BOLTED WITH HIGH STRENGTH BOLTS, SLIP–CRITICAL (FRICTION) TYPE EXCEPT WHERE SLOTTED HOLES ARE SPECIFIED OR WHERE MOVEMENT OF THE CONNECTED MEMBERS IS EXPECTED. IN THESE CASES PROVIDE OVERSIZED WASHER, HAND TIGHTEN BOLTS, AND TACK WELD WASHER TO NUT TO VERIFY ASSEMBLY IS HELD TOGETHER.
7. ALL WELDING SHALL CONFORM TO THE AMERICAN WELDING SOCIETY CODE, ANS01.1, ALL WELDING SHALL BE PERFORMED USING E70XX U.N.O.
8. CUTS, HOLES, COPINGS, ETC. REQUIRED IN STRUCTURAL STEEL MEMBERS FOR THE WORK OF OTHER TRADES SHALL BE SHOWN IN THE STRUCTURAL STEEL SHOP DRAWINGS AND SHALL BE MADE IN THE SHOP. HOLES SHALL BE REINFORCED AS REQUIRED BY THE ENGINEER.
9. BURNING OF HOLES, CUTS, ETC. IN STRUCTURAL STEEL MEMBERS IN THE FIELD WILL NOT BE PERMITTED, EXCEPT WITH THE SPECIFIC APPROVAL OF THE ENGINEER.
10. ALL STEEL MEMBERS EXPOSED TO WEATHER (SUCH AS LINTELS, DOOR JAMBS, ETC.) SHALL BE GALVANIZED.
11. FOR MISCELLANEOUS STEEL, SEE ARCHITECTURAL DRAWINGS.
12. ANY STEEL MEMBERS REQUIRED BY THE ELECTRICAL OR MECHANICAL TRADES FOR THE SUPPORT OF THEIR EQUIPMENT, WHICH ARE NOT SHOWN ON ARCHITECTURAL OR STRUCTURAL DRAWINGS, SHALL BE PROVIDED BY THE TRADE REQUIRING SUCH SUPPORT.
13. SEE SPECIFICATIONS FOR PAINTING OF STRUCTURAL STEEL. ALL FABRICATION AND ERECTION MARKS SHALL BE COVERED DURING FIELD TOUCH–UP PAINTING.
14. ALL CONNECTIONS TO BE DOUBLE ANGLE FRAMED BEAM CONNECTION PER AISC UNLESS NOTED OTHERWISE. ALL BOLTS TO BE 3/4" MINIMUM DIAMETER UNLESS NOTED OTHERWISE. SHOP CONNECTIONS MAY BE WELDED OR BOLTED. WELDS ARE TO BE EQUAL IN STRENGTH TO BOLTS.
15. DESIGN CONNECTIONS FOR ONE HALF OF THE MAXIMUM SHEAR (V IN KIPS) LISTED IN THE TABLES FOR "ALLOWABLE UNIFORM LOADS IN KIPS FOR BEAMS LATERALLY SUPPORTED" AT THE BOTTOM OF EACH PAGE IN THE "PROPERTIES AND REACTION VALUES", PART 2 OF THE LATEST EDITION OF THE AISC "MANUAL OF STEEL CONSTRUCTION". PROVIDE SIGNED AND SEALED DRAWINGS AND CALCULATIONS BY A PROFESSIONAL ENGINEER.
16. DESIGN BASE PLATE ANCHOR BOLTS FOR LATERAL MEMBERS USING FORCES INDICATED IN DRAWINGS. PROVIDE SIGNED AND SEALED DRAWINGS AND CALCULATIONS BY A PROFESSIONAL ENGINEER.
17. WHEN STEEL MEMBERS ARE WELDED TO EMBED PLATES IN CONCRETE, WELDING PROCESS SHOULD BE PERFORMED IN SUCH WAY THAT EMBED PLATE DOES NOT OVERHEAT AND EXPAND. SUCH EXPANSION WILL CRACK THE CONCRETE SURROUNDING THE EMBED PLATE AND MAY WEAKEN THE STRUCTURAL CAPACITY OF THE CONNECTION. WE RECOMMEND TO PROVIDE SEVERAL SINGLE PASSES TO BUILD UP THE WELD SIZE REQUIRED WITH COOLING OFF PERIODS TO AVOID THE EMBED PLATE EXPANSION. UNDER NO CIRCUMSTANCES PROVIDE MORE THAN 6" OF 1/4" WELD WITHOUT ALLOWING A COOLING OFF PERIOD.

STEEL ROOF DECK:

1. STEEL ROOF DECK SHALL BE A MINIMUM OF 1–1/2" – 20 GAGE WIDE RIB FOR SPANS UP TO 6'–0" OR 3" TYPE N – 20 GAGE FOR SPANS UP TO 12'–0" . THE SIZE, TYPE AND GAGE INDICATED ABOVE SHOULD BE USED UNLESS A DIFFERENT ONE IS INDICATED IN THE ROOF FRAMING NOTES OF THE ROOF PLAN DRAWING.
2. ALL STEEL ROOF DECK SHALL BE GALVANIZED G90 AS PER ASTM SPECIFICATIONS.
3. ALL STEEL ROOF DECK SHALL BE CAPABLE OF SUPPORTING ALL CONSTRUCTION LOADS.
4. ALL STEEL ROOF DECK SHALL BE CONTINUOUS OVER FOUR OR MORE STRUCTURAL SUPPORTS (I.E. DECK SHOULD BE DETAILED FOR A THREE SPAN CONDITION.)
5. STEEL ROOF DECK SHALL HAVE NESTING SIDE LAPS (ATTACHED BY MECHANICAL MEANS). PROVIDE FASTENER LAYOUT AS PER DETAIL 5–305 ON DRAWING S3.3.
6. IF DECK IS CUT IN SINGLE SPAN CONDITION, EACH END OF SUCH SECTIONS SHALL BE WELDED TO ITS SUPPORT THROUGH WELDING WASHERS IN THE BOTTOM OF EACH RIB.
7. IN AREAS WHERE THE DECK IS CUT AS PER NOTE 6, THE GAGE OF THE SINGLE SPAN DECK SHALL BE ADJUSTED UPWARDS AS REQUIRED BY THE ENGINEER TO SUPPORT THE LOADS.
8. ANY ELECTRICAL WORK WEIGHING MORE THAN 5 PSF OR 50 LBS CONCENTRATED SHALL BE HUNG FROM STEEL BEAMS ONLY. FOR HANGERS, SEE SPECIFICATIONS. ALL MECHANICAL WORK AND PIPING SHALL BE HUNG FROM STEEL BEAMS. SEE STRUCTURAL STEEL NOTE 12 (OF STRUCTURAL STEEL NOTES) FOR ADDITIONAL STEEL REQUIRED BY MECHANICAL/ELECTRICAL TRADES TO SUPPORT THEIR EQUIPMENT.
9. METAL DECK CONTRACTOR TO PROVIDE 18 GAGE RIDGE PLATE, VALLEY PLATE, EDGE STRIP, ETC., AS REQUIRED.
10. STEEL ROOF DECK SHALL BE WELDED AT ENDS AND ALL INTERMEDIATE SUPPORTING MEMBERS WITH 5/8" DIAMETER PUDDLE WELDS OR ELONGATED WELDS OF EQUAL STRENGTH SPACED PER SPECIFICATIONS IN THE BOTTOM OF THE RIB ACROSS THE WIDTH OF THE DECK UNIT.
11. CUT OUT METAL DECK WHERE BOLT PROJECTIONS INTERFERE WITH METAL DECK.
12. DIRECTION OF METAL DECK SHOWN THUS ←→ ON PLAN.

PRE–ENGINEERED BUILDING STRUCTURE:

1. PRE–ENGINEERED STRUCTURE SHALL INCLUDE METAL DECK, ROOF PURLINS, BEAMS SUPPORTING METAL ROOF AND FLOOR DECK AND STRUCTURAL STEEL COLUMNS ATTACHED TO FOUNDATIONS.
2. STRUCTURAL STEEL SHALL BE DESIGNED IN ACCORDANCE WITH APPLICABLE DESIGN STANDARDS AND CODES.
3. STRUCTURAL STEEL FRAMES SHALL BE DESIGNED TO RESIST WIND PRESSURE PARALLEL TO THE FRAMES. DESIGN SHALL BE IN ACCORDANCE WITH BUILDING CODE REQUIREMENTS FOR THE DESIGN WIND SPEED AND BUILDING HEIGHT SPECIFIED ELSEWHERE IN THESE NOTES.
4. STRUCTURAL STEEL FRAMES SHALL BE DESIGNED TO SUPPORT THE DEAD AND LIVE LOADS ASSOCIATED WITH THE ROOF, FLOOR & CONSTRUCTION SPECIFIED ELSEWHERE IN THESE NOTES AND PLANS.
5. METAL BUILDING MANUFACTURER SHALL SUBMIT DESIGN COMPUTATIONS FOR ALL STRUCTURAL MEMBERS SIGNED AND SEALED BY A PROFESSIONAL ENGINEER LICENSED TO PERFORM STRUCTURAL DESIGN IN THE STATE OF FLORIDA.
6. STANDING SEAM METAL ROOF DECK SHALL NOT BE CONSIDERED EFFECTIVE AS A STRUCTURAL DIAPHRAGM IN THE DISTRIBUTION OF LATERAL FORCES. ALL LATERAL FORCES SHALL BE DISTRIBUTED BY A MEANS OF DIAGONAL BRACING AS REQUIRED.
7. METAL BUILDING MANUFACTURER SHALL SUBMIT SUMMARIES OF FORCES GENERATED AT THE BASE OF ALL COLUMNS UNDER ALL GOVERNING DESIGN LOAD COMBINATIONS. THESE SUMMARIES SHALL BE SUBMITTED TO THE ENGINEER IN ORDER TO CONFIRM THE CAPACITY OF THE FOUNDATIONS PRIOR TO THE FABRICATION OF ANY PARTS OF THOSE OR FOUNDATIONS FIELD WORK ASSOCIATED.
8. METAL BUILDING MANUFACTURER SHALL SPECIFY THE NUMBER, SIZE, GRADE DEPTH OF EMBEDMENT AND LOCATION OF ANCHOR BOLTS REQUIRED AT THE BASE OF ALL COLUMNS AND SHALL SUBMIT SUCH DETAILS TO THE ENGINEER FOR COORDINATION.
9. STANDING SEAM METAL ROOF DECK SHALL BE SIZED IN ACCORDANCE WITH APPROPRIATE DESIGN STANDARDS AND CODES.
10. PROVIDE ALL EAVES PLATES, RIDGE PLATES, AND OTHER PIECES TO INSURE A WEATHER–TIGHT ASSEMBLY.
11. THE ERECTOR IS RESPONSIBLE FOR HIRING A LOCAL REGISTERED ENGINEER TO DESIGN ALL TEMPORARY GUYS AND BRACING WHERE NEEDED TO SECURE THE STRUCTURAL FRAMING AGAINST LOADS DURING ERECTION SUCH AS DESIGN WIND LOADS ACTING ON THE EXPOSED FRAMING. SUBMIT SIGNED AND SEALED CALCULATIONS AND ERECTION PLANS FOR REVIEW.

POST –INSTALLED ANCHORS

1. POST–INSTALLED ANCHORS SHALL ONLY BE USED WHERE SPECIFIED ON THE CONSTRUCTION DOCUMENTS. SPECIAL INSPECTIONS (ARE/ ARE NOT) REQUIRED PER THE PROVISIONS SET FORTH BELOW. CONTRACTOR TO CONTACT MANUFACTURER'S REPRESENTATIVE FOR PROPER PRODUCT INSTALLATION TRAINING ON INITIAL ANCHORS.
2. SUBSTITUTION REQUESTS, FOR PRODUCTS OTHER THAN THOSE SPECIFIED BELOW, SHALL BE SUBMITTED BY THE CONTRACTOR TO THE ENGINEER–OF–RECORD ALONG WITH CALCULATIONS THAT ARE PREPARED & SEALED BY A REGISTERED PROFESSIONAL ENGINEER. THE CALCULATIONS SHALL DEMONSTRATE THAT THE SUBSTITUTED PRODUCT IS CAPABLE OF ACHIEVING THE PERTINENT EQUIVALENT PERFORMANCE VALUES (MINIMUM) OF THE SPECIFIED PRODUCT USING THE APPROPRIATE DESIGN PROCEDURE AND/OR STANDARD(S) AS REQUIRED BY THE BUILDING CODE.
3. EXPANSION ANCHORS SHALL BE STUD TYPE WITH A SINGLE PIECE OF THREE SECTION WEDGE AND ZINC PLATED IN ACCORDANCE WITH ASTM B633. THE ANCHORS SHALL MEET FEDERAL SPECIFCATIONFF–S–325, GROUP II, TYPE 4, CLASS I FOR CONCRETE EXPANSION ANCHORS. ANCHORS SHALL BE HILTI KWIK BOLT II AS SUPPLIED BY HILTI INC. TULSA OKLAHOMA. ANCHORS SHALL BE INSTALLED IN HOLES DRILLED WITH HILTI CARBIDE TIPPED DRILL BITS OR MATCHED TOLERANCE DIAMOND CORE BITS. ANCHORS SHALL BE INSTALLED IN ACCORDANCE WITH MANUFACTURE'S RECOMMENDATIONS.
4. INJECTED ADHESIVE ANCHORS SHALL BE USED FOR INSTALLATION OF THREADED RODS. ADHESIVE SHALL BE FURNISHED IN A SIDE BY SIDE REFILL PACK WHICH KEEP COMPONENT A AND B SEPARATE. INJECTION ADHESIVE SHALL BE HILTI HIT HY 150 AS SUPPLIED BY HILTI INC. TULSA OKLAHOMA. ANCHOR RODS MEET ASTM F1554 (36 KSI). NUTS AND WASHERS SHALL BE FURNISHED TO MEET THE REQUIREMENTS OF AN ASTM F1554 (36 KSI) STEEL ROD.

SHOP DRAWINGS:

1. NO STRUCTURAL DRAWINGS SHALL BE REPRODUCED FOR USE AS SHOP DRAWINGS.
2. ALL DIMENSIONAL COORDINATION SHALL BE DONE BY THE CONTRACTOR AND/OR HIS DETAILER.
3. DETAILER SHALL CHECK ALL ARCHITECTURAL AND MECHANICAL DRAWINGS FOR ALL ATTACHMENTS, CLIPS, OPENINGS, OR DUCT WORK AFFECTING STRUCTURAL MEMBERS. ALL ITEMS SHALL BE SHOWN ON SHOP DRAWINGS.
4. ALL SHOP DRAWINGS SHALL BE SUBMITTED ELECTRONICALLY IN PDF FORMAT. DISTRIBUTION AS PER ARCHITECT INSTRUCTIONS.
5. PROVIDE SUFFICIENT SPACE ON SHOP DRAWINGS NEAR TITLE BOX (ABOUT 40 SQUARE INCHES) FOR STAMPS AND ENGINEERS COMMENTS.
6. THE SHOP DRAWINGS SHALL BEAR INITIALS OF DETAILER'S CHECKER AND CONTRACTOR PRIOR TO SUBMISSION.
7. COMPLETED ERECTION PLANS SHALL BE SUBMITTED PRIOR TO OR IN CONJUNCTION WITH DETAIL DRAWINGS. BUT IN NO CASE SHALL DETAIL DRAWINGS BE SUBMITTED PRIOR TO ERECTION PLANS.
8. DETAILER SHALL SUBMIT AN INDEX OF THE DETAIL DRAWINGS WITH EACH SHOP DRAWING SUBMITTAL.
9. SHOP DRAWINGS NOT COMPLYING WITH ALL THE ABOVE ITEMS SHALL BE RETURNED FOR CORRECTIONS WITHOUT PROCESSING.
10. RESUBMITTED SHOP DRAWINGS SHALL HAVE THE FOLLOWING CHANGES INCORPORATED: FIRST RESUBMISSION TO HAVE LETTER "A" ADDED TO DRAWING
    - A. NUMBER AND ANY CHANGES MARKED ON THE DRAWING MARKED 1 AT EACH ITEM CHANGED. ALL ITEMS TO BE NOTED IN REVISION BOX.
    - B. SUBSEQUENT RESUBMISSION SHALL BEAR CHANGES "B" AND 2 AND 3 ETC. AS IN 11A.
11. CONTRACTOR SHALL HAVE SHOP DRAWINGS WHICH HAVE BEEN SATISFACTORILY REVIEWED BY THE ARCHITECT AND/OR ENGINEER AND CONFIRMED BY THE CONTRACTOR BEFORE PROCEEDING WITH ANY WORK.
12. DETAILER SHALL USE THE SAME STRUCTURAL ELEMENT NUMBER IN HIS DETAILS AS THOSE SHOWN ON CONTRACT DRAWINGS.
13. <u>SHOP DRAWINGS FOR ALL STRUCTURAL ELEMENTS SHOULD BE SUBMITTED TO MCE WITH A MINIMUM TIME TO BE REVIEWED OF 10 WORKING DAYS. IN CASE OF A LARGE SUBMITTAL OR MORE THAN ONE SUBMITTAL FOR THE SAME PROJECT, AN ADDITIONAL WORKING DAY IS REQUIRED FOR EVERY 5 DRAWINGS/SHEETS OVER 30 DRAWINGS/SHEETS. THE TIME INDICATED ABOVE IS FOR MCE REVIEW ONLY. CONTRACTOR MUST INCLUDE ENOUGH TIME FOR DELIVERY, ARCHITECTURAL REVIEW, AND OWNERS REVIEW AND WORK THIS TIME IN THE PROJECT SCHEDULE AS NEEDED.</u>
14. <u>THERE SHALL BE NO DEVIATION FROM THESE CONSTRUCTION DOCUMENTS. IF ANY CHANGES ARE PROPOSED BY THE CONTRACTOR OR THE PROVIDER OF THE SHOP DRAWINGS, THEY SHOULD BE CLEARLY INDICATED. SIGNED AND SEALED DRAWINGS AND CALCULATIONS BY FLORIDA PROFESSIONAL ENGINEER MUST BE PROVIDED. ANY CHANGES WITHOUT PROPER DOCUMENTATION INDICATED ABOVE WILL RESULT IN SOME REVISIONS BY THE ENGINEER OF RECORD AND/OR ARCHITECT. THE COST FOR THESE REVISIONS INCLUDING ENGINEER AND ARCHITECTURAL FEES SHALL BE PAID BY THE CONTRACTOR.</u>

TO THE BEST OF OUR KNOWLEDGE, INFORMATION AND BELIEF, THESE STRUCTURAL PLANS CONFORM TO AND SATISFY THE REQUIREMENTS OF THE FLORIDA BUILDING CODE, 2017 (6TH EDITION), ACI 318–14, AND LOCAL CODES AS APPLICABLE

MASTER CONSULTING ENGINEERS, INC.
STRUCTURAL CONSULTANTS
5523 WEST CYPRESS ST., #200
TAMPA, FLORIDA 33607
813.287.3600 FAX 813.287.3622
www.mcengineers.com

THIS DRAWING AND ALL INFORMATION CONTAINED HEREIN IS THE SOLE PROPERTY OF MASTER CONSULTING ENGINEERS, INC. AND MAY NOT BE REPRODUCED, COPIED, ALTERED OR USED IN ANY WAY WITHOUT THE EXPRESS WRITTEN AUTHORIZATION FROM MASTER CONSULTING ENGINEERS, INC.

CA: 8426 PROJ NO. 2300–179
© COPYRIGHT 2018

FleischmanGarcia
ARCHITECTURE • PLANNING • INTERIOR DESIGN
SAFETY HARBOR OFFICE
195 FOURTH AVENUE NORTH
SAFETY HARBOR, FLORIDA 34695
PHONE (727) 725-8880
FAX (727) 725-3900
TAMPA OFFICE
324 HYDE PARK AVENUE, SUITE 300
TAMPA, FLORIDA 33606
PHONE (813) 251-4400
FAX (813) 251-1994
SARASOTA OFFICE
5967 CATTLEMEN LANE, SUITE 6
SARASOTA, FLORIDA 34232
PHONE (941) 342-9293
FAX (941) 342-9253
REGISTRATION NUMBER AA C000123

NEW TAMPA RECREATION CENTER ADDITION

TAMPA, FL 33647

THIS DESIGN AND DRAWING IS THE SOLE PROPERTY OF FLEISCHMANGARCIA. NO PART OF THIS WORK MAY BE REPRODUCED WITHOUT PRIOR WRITTEN PERMISSION FROM FLEISCHMANGARCIA.

I CERTIFY TO THE BEST OF MY KNOWLEDGE THAT THESE DRAWINGS COMPLY W/ ALL RELEVANT BUILDING CODES

FGA PROJECT NUMBER
18015

ISSUE DATE
11/07/18

GENERAL STRUCTURAL NOTES

SHEET NUMBER
S1.1

11-07-18 John Weber T:\2000 Projects\2300 FleischGarcia\2300-179 New Tampa Rec Center Addition 2018\Drafting\Sdwg\S1.1.dwg
T:\2000 Projects\2300 FleischGarcia\2300-179 New Tampa Rec Center Addition 2018\Drafting\Sdwg\S1.1.dwg, 11/9/2018 10:22:19 AM, John

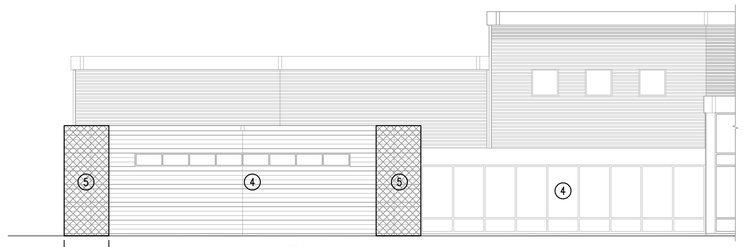

Front Elevation

Side Elevation

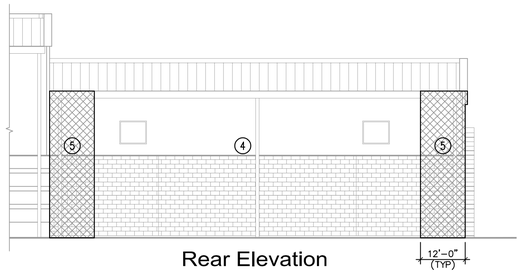

Rear Elevation

2 / S1.02 BUILDING ELEVATIONS - WALL PRESSURES DIAGRAMS

SCALE: NONE

COMPONENTS AND CLADDING DESIGN WIND PRESSUR (ULTIMATE) FOR WALLS, DOORS & WINDOWS						
PATTERN	ZONE	EFFECTIVE WIND AREA				
		10 SQ. FT.	20 SQ. FT.	50 SQ. FT.	100 SQ. FT.	200 SQ. FT.
	4	+46 PSF/-50 PSF	+44 PSF/-48 PSF	+43 PSF/-46 PSF	+39 PSF/-43 PSF	+37 PSF/-43 PSF
	5	+46 PSF/-62 PSF	+44 PSF/-58 PSF	+43 PSF/-46 PSF	+39 PSF/-50 PSF	+37 PSF/-44 PSF

NOTE:
ALL EXTERIOR DOORS & WINDOW ASSEMBLIES SHALL SATISFY THE REQUIREMENTS OF THE FLORIDA BUILDING CODE (6TH EDITION) 2017, SECTION 1704.4. ALL CONNECTIONS TO BUILDING STRUCTURE SHALL HAVE THE CAPACITY TO WITHSTAND THE PRESSURES INDICATED IN THIS SCHEDULE.

LOAD SCHEDULE:

MECHANICAL PLATFORM:

DEAD LOAD

1½" 20 GA NONCOMPOSITE METAL DECK (NORMAL WEIGHT CONCRETE)	= 44 PSF
MECHANICAL EQUIPMENT	= 70 PSF
TOTAL DEAD LOAD	=114 PSF
LIVE LOAD	
ELEVATED PLATFORM	=60 PSF
MECHANICAL PLATFORM TOTAL LOAD	=174 PSF

ROOF:

DEAD LOAD

1½" 20 GA METAL ROOF DECK	= 3 PSF
STEEL FRAMING	= 5 PSF
CEILING	= 3 PSF
INSULATION	= 5 PSF
MEP	= 7 PSF
MISCELLANEOUS	= 2 PSF
ROOFING	= 5 PSF
TOTAL DEAD LOAD	=30 PSF
LIVE LOAD	
ROOF LL	=20 PSF
ROOF TOTAL LOAD	=50 PSF

WIND DESIGN DATA:

CODE: FLORIDA BUILDING CODE 6TH EDITION 2017
ASCE 7-10
EXPOSURE CATEGORY: B
RISK CATEGORY: III
BASIC WIND SPEED: 150 MPH (ULT)
116 MPH (ASD)
ENCLOSURE CLASSIFICATION: ENCLOSED
BUILDING HEIGHT: 27ft
INTERNAL PRESSURE COEFFICIENT: +/-0.18

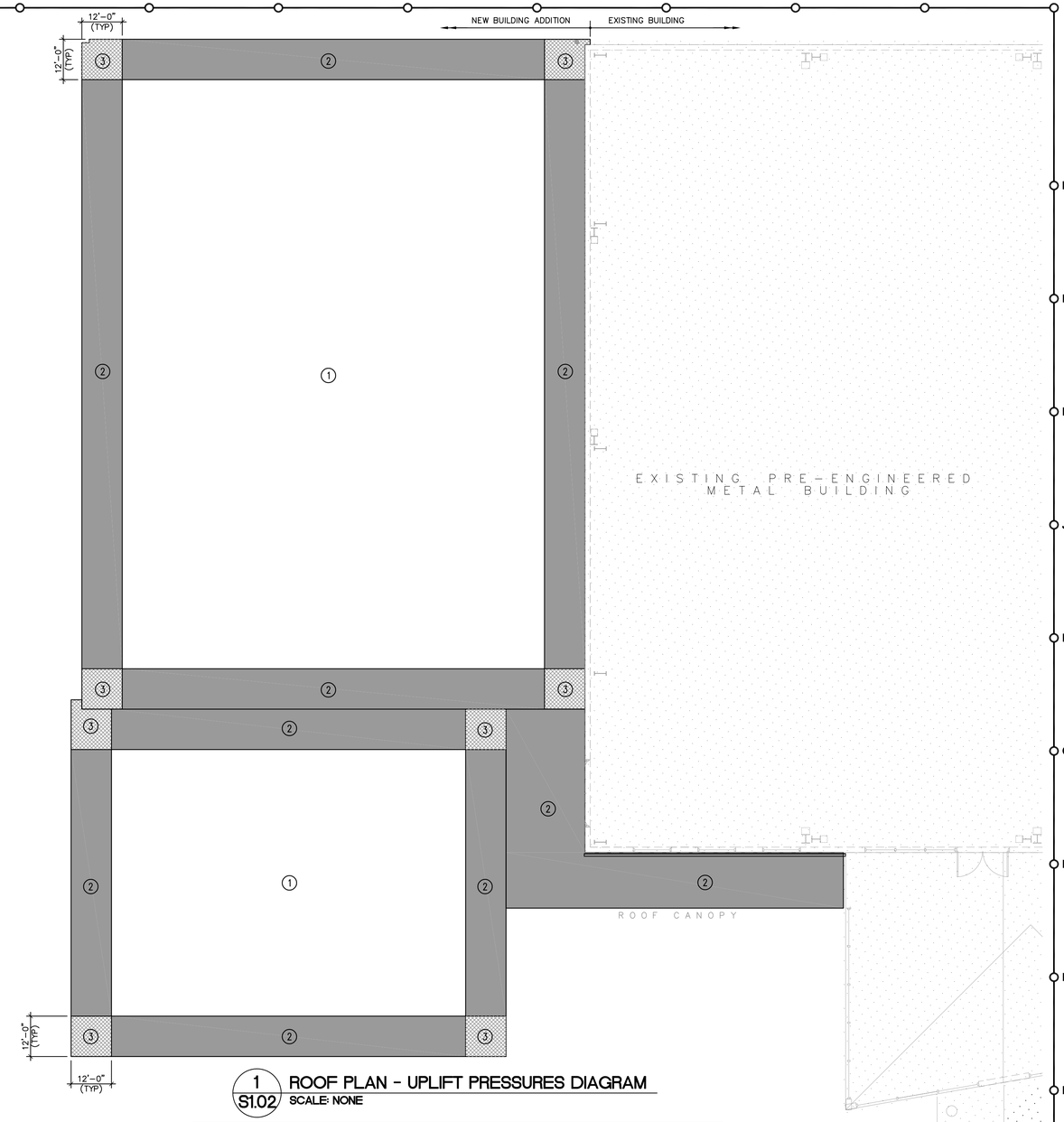

1 / S1.02 ROOF PLAN - UPLIFT PRESSURES DIAGRAM

SCALE: NONE

COMPONENTS AND CLADDING DESIGN WIND PRESSURES (ULT)						
PATTERN	ZONE	ROOF				
		EFFECTIVE WIND AREA				
		10 SQ. FT.	20 SQ. FT.	50 SQ. FT.	100 SQ. FT.	200 SQ. FT.
	1	+27 PSF/-43 PSF	+25 PSF/-43 PSF	+21 PSF/-41 PSF	+19 PSF/-39 PSF	+19 PSF/-39 PSF
	2	+27 PSF/-74 PSF	+25 PSF/-68 PSF	+21 PSF/-60 PSF	+19 PSF/-54 PSF	+19 PSF/-54 PSF
	3	+27 PSF/-109 PSF	+25 PSF/-103 PSF	+21 PSF/-93 PSF	+19 PSF/-85 PSF	+19 PSF/-85 PSF
	2' ov	-93 PSF	-93 PSF	-93 PSF	-93 PSF	-93 PSF
	3' ov	-152 PSF	-140 PSF	-120 PSF	-105 PSF	-105 PSF

NOTES:

1. ov DENOTES OVERHANG.
2. PLUS AND MINUS SIGNS SIGNIFY PRESSURES ACTING TOWARD AND AWAY FROM THE SURFACES, RESPECTIVELY. NEGATIVE PRESSURE DENOTES NET UPLIFT.
3. ALL WIND PRESSURE VALUES INDICATED ARE IN POUNDS PER SQUARE FOOT (PSF). MULTIPLY ULTIMATE WIND PRESSURE BY 0.60 FOR ASD PRESSURE.
4. NET UPLIFT = GROSS UPLIFT - 0.60 X DEAD LOAD.
5. ROOFING MATERIALS SHALL BE CONNECTED TO THE ROOF STRUCTURE TO RESIST UPLIFT INDICATED IN THIS SCHEDULE.

TO THE BEST OF OUR KNOWLEDGE, INFORMATION AND BELIEF, THESE STRUCTURAL PLANS CONFORM TO AND SATISFY THE REQUIREMENTS OF THE FLORIDA BUILDING CODE, 2017 (6TH EDITION), ACI 318-14, AND LOCAL CODES AS APPLICABLE

MASTER CONSULTING ENGINEERS, INC.
STRUCTURAL CONSULTANTS
5023 WEST CYPRESS ST., SUITE #200
TAMPA, FLORIDA 33607
813.287.9600 FAX 813.287.3622
www.mceengineers.com

CA: 8426 PROJ NO. 2200-179

© COPYRIGHT 2018
THIS DRAWING AND ALL INFORMATION CONTAINED HEREIN IS THE SOLE PROPERTY OF MASTER CONSULTING ENGINEERS, INC. AND SHALL NOT BE REPRODUCED IN WHOLE OR IN PART WITHOUT AN WRITTEN PERMISSION OF MASTER CONSULTING ENGINEERS, INC.

FleischmanGarcia
ARCHITECTURE · PLANNING · INTERIOR DESIGN
SAINT PETERSBURG OFFICE
195 FOURTH AVENUE NORTH
ST. PETERSBURG, FLORIDA 33705
PHONE (727) 726-6080
FAX (727) 726-0666
TAMPA OFFICE
324 HYDE PARK AVENUE, SUITE 500
TAMPA, FLORIDA 33606
PHONE (813) 251-4400
FAX (813) 251-4444
5967 CAYTLEMON LANE, SUITE 6
ORLANDO, FLORIDA 32822
PHONE (941) 342-6253
FAX (941) 342-6253
REGISTRATION NUMBER AA C000123

NEW TAMPA RECREATION CENTER ADDITION

TAMPA, FL 33647

THIS DESIGN AND DRAWING IS THE SOLE PROPERTY OF FLEISCHMAN/GARCIA, INC. AND SHALL NOT BE REPRODUCED WITHOUT PRIOR WRITTEN PERMISSION FROM FLEISCHMAN/GARCIA

CERTIFY TO THE BEST OF MY KNOWLEDGE THAT THESE DRAWINGS COMPLY W/ ALL RELEVANT BUILDING CODES

FGA PROJECT NUMBER
18015

ISSUE DATE
11/07/18

WIND DESIGN DATA AND LOAD SCHED.

SHEET NUMBER
S1.2

T:\2000 Projects\2300 Fleischman\Garcia\2300-179 New Tampa Rec Center Addition 2018\Drafting\Dwgs\S1.2.dwg, 11/6/2018 10:21:13 AM, John
11-07-18 John Weber T:\2000 Projects\2300 Fleischman\Garcia\2300-179 New Tampa Rec Center Addition 2018\Drafting\Dwgs\S1.2.dwg

STRUCTURAL INSPECTION PLAN

PART I

1.01 SCOPE OF WORK

THIS PLAN DESCRIBES WORK REQUIRED TO COMPLY WITH THE THRESHOLD LAW; CHAPTER 553 OF THE FLORIDA STATUTES. THE OWNER SHALL RETAIN A QUALIFIED SPECIAL INSPECTOR TO PERFORM THE WORK DESCRIBED HEREIN. PROPOSALS FOR SPECIAL INSPECTION SERVICES SHALL BE SEPARATE AND INDEPENDENT FROM ALL OTHER PROPOSALS FOR MATERIALS TESTING AND OTHER QUALITY ASSURANCE SERVICES. THE SPECIAL INSPECTOR SHALL VERIFY THAT THE PRIMARY STRUCTURAL FRAME (ALL THOSE MEMBERS WHICH TRANSMIT LOADS TO THE GROUND) IS CONSTRUCTED IN SUBSTANTIAL ACCORDANCE WITH THE PERMITTED OFFICIAL CONTRACT DOCUMENTS, EXCEPT AS VARIATIONS THERE FROM ARE PERMITTED IN WRITING BY THE STRUCTURAL ENGINEER OF RECORD. THIS PLAN MAY BE SUPPLEMENTED BY ADDITIONAL REQUIREMENTS OF THE MUNICIPALITY OR BY THE OWNER AS DEEMED NECESSARY DURING THE COURSE OF THE WORK. THIS DOES NOT INCLUDE INSPECTION OF ANY SAFETY PROVISIONS AS REQUIRED BY OSHA OR OTHER SAFETY STANDARDS WHICH APPLY DURING THE CONSTRUCTION PERIOD, TO ELEMENTS SUCH AS RAILINGS, FIRE PROTECTION, ROOFING, GLAZED WINDOW SYSTEMS, ARCHITECTURAL PRECAST PANELS, MECHANICAL/ELECTRICAL SYSTEMS, ARCHITECTURAL COMPONENTS, SITE WORK AND OTHER ELEMENTS NOT CONTRIBUTING TO THE CAPACITY OF THE PRIMARY STRUCTURAL BUILDING FRAME. THE OFFICIAL CONTRACT DOCUMENTS ARE DEFINED AS THE PERMITTED PLANS, RECORDED ADDENDA, PROJECT SPECIFICATIONS, AMENDMENTS AND THE STRUCTURAL INSPECTION PLAN.

1.02 QUALIFICATIONS OF THE SPECIAL INSPECTOR

A. SPECIAL INSPECTOR SHALL BE A FLORIDA REGISTERED ENGINEER EXPERIENCED IN STRUCTURAL ENGINEERING AND CERTIFIED AS REQUIRED BY CURRENT LEGISLATION. THE SPECIAL INSPECTOR MAY SEND A FULL-TIME EMPLOYEE AS HIS AUTHORIZED REPRESENTATIVE TO THE PROJECT, BUT THAT PERSON SHALL BE EXPERIENCED AND KNOWLEDGEABLE IN THE STRUCTURAL SYSTEM BEING USED AND THE APPROPRIATE PORTIONS OF THE GOVERNING CODES AND STANDARDS.

B. THE SPECIAL INSPECTOR SHALL HAVE A MINIMUM OF SEVEN (7) YEARS OF EXPERIENCE IN DESIGN AND INSPECTION OF SIMILAR STRUCTURES AND SHALL HAVE BEEN ENGINEER OF RECORD IN AT LEAST (4) SIMILAR STRUCTURES. THE SPECIAL INSPECTOR'S REPRESENTATIVE SHALL HAVE AN ENGINEERING COLLEGE DEGREE AND OBTAINED HIS "EI". SHALL HAVE DESIGNED AT LEAST (1) SIMILAR STRUCTURE AND HAVE AT LEAST (3) YEARS OF EXPERIENCE IN INSPECTION OF SIMILAR STRUCTURES. RESUMES OF BOTH THE SPECIAL INSPECTOR AND SPECIAL INSPECTOR'S REPRESENTATIVE SHALL BE SUBMITTED TO THE OWNER'S REPRESENTATIVE, THE ENFORCING AGENCY HAVING JURISDICTION AND THE STRUCTURAL ENGINEER OF RECORD FOR REVIEW AND ACCEPTANCE. AS USED HEREIN THE TERM SPECIAL INSPECTOR INCLUDES THE AUTHORIZED REPRESENTATIVE, UNLESS OTHERWISE INDICATED. INSOFAR AS POSSIBLE, THE SPECIAL INSPECTOR SHALL NOT BE CHANGED THROUGHOUT THE DURATION OF THE PROJECT.

C. THE SPECIAL INSPECTOR IS TO PROVIDE TO THE OWNER INSURANCE CERTIFICATES FOR ALL APPLICABLE COVERAGES, INCLUDING PROFESSIONAL LIABILITY, SPECIFICALLY COVERING SUCH SPECIAL INSPECTION ASSIGNMENTS; GENERAL LIABILITY; AUTOMOBILE COVERAGE; WORKMEN'S COMPENSATION AND ANY OTHER APPROPRIATE COVERAGE.

1.03 RESPONSIBILITIES AND LIMITATIONS OF THE SPECIAL INSPECTOR

A. THE SPECIAL INSPECTOR IS RESPONSIBLE TO THE ENFORCING AGENCY HAVING JURISDICTION FOR THIS PROJECT. THE PRESENCE OF THE SPECIAL INSPECTOR DOES NOT RELIEVE THE ENFORCING AGENCY, THE ARCHITECT OR THE STRUCTURAL ENGINEER OF RECORD OF THEIR RESPONSIBILITIES.

B. PRIOR TO STARTING WITH THE WORK, THE SPECIAL INSPECTOR AND THE AUTHORIZED REPRESENTATIVE SHALL BECOME FAMILIAR WITH THE SPECIFIC STRUCTURAL COMPONENTS AND SYSTEMS WHICH THE SPECIAL INSPECTOR WILL BE RESPONSIBLE FOR INSPECTING. HE IS RESPONSIBLE FOR A THOROUGH KNOWLEDGE OF THE INTENT AND CONTENT OF THE CONTRACT DOCUMENTS AND ACCEPTED SUBMITTALS RELATING TO HIS INSPECTION RESPONSIBILITIES. APPROPRIATE PORTIONS OF THE GOVERNING CODES, AND THE EXERCISE OF GOOD JUDGEMENT.

C. THE SPECIAL INSPECTOR SHALL THEN PROVIDE A CERTIFIED AFFIDAVIT TO THE OWNER AND STRUCTURAL ENGINEER OF RECORD ATTESTING TO THE FOLLOWING:

1. HE HAS REVIEWED THE CONTRACT DOCUMENTS AND UNDERSTANDS THEIR CONTENT AND THE CONCEPT WITH ITS REQUIREMENTS.
2. HE HAS READ THE STRUCTURAL INSPECTION PLAN, UNDERSTANDS ITS INTENT AND INTENDS TO COMPLY WITH ITS REQUIREMENTS.

D. THE SPECIAL INSPECTOR IS RESPONSIBLE FOR OBSERVING THE CONSTRUCTION OF THE PRIMARY STRUCTURAL COMPONENTS AND REPORTING TO THE CONCERNED PARTIES THAT THOSE PORTIONS OF THE STRUCTURE ARE BEING BUILT IN GENERAL CONFORMANCE WITH THE STRUCTURAL DOCUMENTS, AND IF NOT, THE LOCATION AND DESCRIPTIONS OF THOSE VARIATIONS.

E. THE SPECIAL INSPECTOR IS NOT TO MAKE DESIGN DECISIONS OR INTERPRETATIONS OF THE CONTRACT DOCUMENTS.

F. THE SPECIAL INSPECTOR SHALL COOPERATE WITH THE CONTRACTOR, BUT SHALL NOT DIRECT THE CONTRACTOR'S WORK NOR BE RESPONSIBLE FOR CONSTRUCTION MEANS AND METHODS.

1.04 REPORTING

A. THE SPECIAL INSPECTOR SHALL MAINTAIN A RECORD OF THE PROGRESS, WORKING CONDITIONS, OBSERVATIONS, TESTING, ANY REQUIRED ACTION BY THE CONTRACTOR, AND DEVIATIONS FROM THE OFFICIAL CONTRACT DOCUMENTS. SUCH RECORDS ARE TO BE KEPT BY THE SPECIAL INSPECTOR FOR A MINIMUM OF SEVEN YEARS AFTER COMPLETION OF THE PROJECT.

B. IT IS THE DUTY OF THE SPECIAL INSPECTOR TO IMMEDIATELY NOTIFY THE CONTRACTOR IN PERSON, AND THE ARCHITECT AND STRUCTURAL ENGINEER OF RECORD BY TELEPHONE, OF THE FOLLOWING:

1. THE USE OF MATERIALS, TESTS, EQUIPMENT, WORKMANSHIP OR CONSTRUCTION NOT CONFORMING TO THE OFFICIAL CONTRACT DOCUMENTS.
2. CONSTRUCTION PERFORMED WITHOUT INSPECTION AND NOT CAPABLE OF BEING INSPECTED OR TESTED IN PLACE. THESE EXCEPTIONS SHALL THEN BE ISSUED IN WRITING IMMEDIATELY TO THOSE LISTED ABOVE AND ATTACHED TO THE DAILY FIELD REPORTS.

C. THE SPECIAL INSPECTOR SHALL KEEP AN EXCEPTION FILE FOR FOLLOW-UP. THIS FILE SHALL BE REVIEWED ON A DAILY BASIS AND UPDATED AS EXCEPTIONS ARE RECTIFIED. ANY UNCORRECTED EXCEPTIONS SHALL BE REPORTED AT AN APPROPRIATE TIME, USING A NON-COMPLIANCE NOTICE, TO THE CONTRACTOR, ENFORCING AGENCY, OWNER'S REPRESENTATIVE AND ARCHITECT/ENGINEER.

D. THE SPECIAL INSPECTOR SHALL WRITE AND SIGN A REPORT EACH DAY AN INSPECTION IS MADE. THE REPORT SHALL CONSIST OF THE FOLLOWING:

1. IDENTIFY NAME AND LOCATION OF PROJECT, NAME OF SPECIAL INSPECTOR AND SPECIAL INSPECTOR REPRESENTATIVE, PERMIT NUMBER, DATE, WORKING CONDITIONS INCLUDING WEATHER AND TEMPERATURE, AND TYPE AND LOCATION OF WORK BEING PERFORMED.
2. A DETAILED REPORT OF EACH INSPECTION, INCLUDING THE PRESENCE AND ACTIVITIES OF THE TESTING AGENCY. NOTE CHANGES IN WORKING SEQUENCE OR MATERIALS AND ANY UNUSUAL CIRCUMSTANCES AFFECTING THE PERFORMANCE OF WORK. PLACE EMPHASIS ON THOSE AREAS WHERE DEFICIENCIES RECUR.
3. REVIEW AND COMMENT ON THE MATERIALS TESTING REPORTS PRIOR TO THAT DAY'S INSPECTION.

E. THE REPORT WILL BE SUPPLEMENTED WITH THE FOLLOWING, WHEN APPLICABLE:

1. SPECIAL RECORDS (WELD TESTS, WELDERS CERTIFICATES, CONCRETE TESTS, ETC.).
2. INSPECTION REPORTS OF THE SHORING AND RE-SHORING ENGINEER.
3. INSPECTION REPORTS OF THE GEOTECHNICAL ENGINEER.
4. DOCUMENTATION OF CHANGES MADE IN THE FIELD.
5. PHOTOGRAPHS.

F. DAILY FIELD REPORTS SHALL BE SUBMITTED ON A WEEKLY BASIS TO THE ENFORCING AGENCY, OWNER'S REPRESENTATIVE, ARCHITECT AND STRUCTURAL ENGINEER OF RECORD, UNDER A COVER LETTER SIGNED AND SEALED BY THE SPECIAL INSPECTOR.

G. AN INSPECTION LOG SUMMARIZING ALL INSPECTIONS SHALL BE POSTED AT THE JOB SITE AND FILLED OUT EACH DAY AN INSPECTION IS MADE. IT SHALL CONTAIN, AS A MINIMUM: PROJECT NAME, LOCATION, PERMIT NUMBER, SPECIAL INSPECTOR'S NAME, OWNER, CONTRACTOR, DATE OF INSPECTION, CONSTRUCTION PHASE, WORK DESCRIPTION, COMMENTS, APPROVED OR REJECTED AND BE SIGNED BY THE SPECIAL INSPECTOR.

H. UPON COMPLETION OF THE BUILDING AND PRIOR TO THE ISSUANCE OF A CERTIFICATE OF OCCUPANCY, THE SPECIAL INSPECTOR SHALL SUBMIT TO THE ENFORCING AGENCY, OWNER, ARCHITECT AND STRUCTURAL ENGINEER OF RECORD A SIGNED AND SEALED STATEMENT STATING THAT THE PART OF THE PROJECT UNDER HIS INSPECTION RESPONSIBILITIES HAS BEEN CONSTRUCTED IN SUBSTANTIAL ACCORDANCE WITH THE OFFICIAL CONTRACT DOCUMENTS. THIS STATEMENT SHALL BE IN ACCORDANCE WITH SECTION 553.79(7)a OF THE FLORIDA STATUTES.

I. SINCE THE SPECIAL INSPECTOR DOES NOT CERTIFY THAT THE OFFICIAL CONTRACT DOCUMENTS ARE IN COMPLIANCE WITH THE GOVERNING CODES, ALL STATEMENTS ISSUED WILL REFER TO COMPLETED WORK IN SUBSTANTIAL ACCORDANCE WITH THE OFFICIAL CONTRACT DOCUMENTS.

1.05 CONTRACTOR REQUIREMENTS

A. THE CONTRACTOR SHALL COOPERATE WITH AND ASSIST THE SPECIAL INSPECTOR IN PERFORMING HIS INSPECTION DUTIES AS SPECIFIED HEREIN. THE SPECIAL INSPECTOR SHALL HAVE FREE ACCESS TO THE PROJECT AT ALL TIMES.

B. THE CONTRACTOR SHALL ADVISE THE SPECIAL INSPECTOR, IN ADVANCE, OF CONSTRUCTION SCHEDULES AND PLANNED OPERATIONS IN ORDER TO ASSURE TIMELY AND APPROPRIATE OBSERVATION AND INSPECTION OF ITEMS SPECIFIED HEREIN. THE MINIMUM NOTICE GIVEN THE SPECIAL INSPECTOR SHALL BE 24 HOURS PRIOR TO THE TIME OF THE INSPECTION. FURTHER, THE SCHEDULED INSPECTION TIME FOR REINFORCING STEEL SHALL BE NOT LESS THAN ONE HOUR PRIOR TO THE SCHEDULED CONCRETE PLACEMENT.

A. THE CONTRACTOR SHALL FURNISH IN A TIMELY MANNER TO THE SPECIAL INSPECTOR, COPIES OF ALL REVIEWED AND ACCEPTED SUBMITTALS (EXCLUDING CALCULATIONS) FOR THE STRUCTURAL ELEMENTS OF THE PROJECT.

D. THE CONTRACTOR SHALL PROVIDE THE SPECIAL INSPECTOR WITH OFFICE FACILITIES AT THE CONSTRUCTION SITE TO ACCOMMODATE HIS NEEDS. AS A MINIMUM, THIS OFFICE, IS TO BE EQUIPPED WITH THE FOLLOWING ITEMS: DESK, CHAIR, PLAN TABLE, PLAN RACK, FILING CABINET, TELEPHONE, UTILITIES, AIR CONDITIONING AND JANITORIAL SERVICES.

E. SPECIAL INSPECTIONS DO NOT RELIEVE THE CONTRACTOR OF HIS RESPONSIBILITY TO COMPLY WITH THE CONTRACT DOCUMENTS, ANY STATUTORY OR CONTRACTUAL OBLIGATIONS, NOR HIS RESPONSIBILITIES TO CARRY OUT HIS QUALITY CONTROL INSPECTIONS AND TESTING. THE CONTRACTOR HAS THE SOLE RESPONSIBILITY FOR ANY DEVIATIONS FROM THE OFFICIAL CONTRACT DOCUMENTS AND THE COSTS OF RECTIFYING THOSE DEVIATIONS.

F. WORK WHICH IS IN NON-COMPLIANCE WITH THE OFFICIAL CONTRACT DOCUMENTS MAY BE CORRECTED BY THE CONTRACTOR OR THE CONTRACTOR MAY SUBMIT TO THE ARCHITECT/ENGINEER A REQUEST FOR ACCEPTANCE OF THE DEVIATION.

G. CONSTRUCTION PERFORMED WITHOUT INSPECTION AND THAT IS UNABLE TO BE INSPECTED MAY REQUIRE TESTING OR REMOVAL AS DETERMINED BY THE STRUCTURAL ENGINEER OF RECORD.

H. THE SPECIAL INSPECTOR CAN NOT MAKE THE REQUIRED COMPLETION STATEMENT AND THE BUILDING WILL NOT RECEIVE A CERTIFICATE OF OCCUPANCY IF WORK IS NOT IN SUBSTANTIAL ACCORDANCE WITH THE OFFICIAL CONTRACT DOCUMENTS, OR IF CONSTRUCTION IS PERFORMED WITHOUT INSPECTION AND IS UNABLE TO BE INSPECTED.

I. INSTALLATION OF ALL SHORING AND RE-SHORING SHALL BE IN ACCORDANCE WITH THE SIGNED AND SEALED SHORING AND RE-SHORING DRAWINGS PREPARED BY THE DELEGATED SHORING ENGINEER. THE DELEGATED SHORING ENGINEER OR HIS AUTHORIZED REPRESENTATIVE SHALL INSPECT AND ENSURE THAT THE DRAWING REQUIREMENTS AND SPECIFICATIONS ARE ADHERED TO, AND PROVIDE HIS WRITTEN REPORT TO THE SPECIAL INSPECTOR PRIOR TO ALL CONCRETE POURS. THE SPECIAL INSPECTOR IS TO VERIFY THAT THE INSPECTION IS PERFORMED AND IS TO OBSERVE THAT THE WORK APPEARS TO BE IN COMPLIANCE WITH THE DRAWINGS.

1.08 REQUIREMENTS OF THE OWNER

A. THE OWNER SHALL ARRANGE FOR ALL NECESSARY CONTRACT DOCUMENTS, INCLUDING TWO COMPLETE SETS OF ARCHITECTURAL AND STRUCTURAL DOCUMENTS FOR THE PROJECT. INCLUDING ALL DRAWINGS AND SPECIFICATIONS, THE GEOTECHNICAL REPORT AND MATERIALS TEST REPORTS, TO BE FURNISHED TO THE SPECIAL INSPECTOR DURING THE PROGRESS OF THE WORK IN A TIMELY MANNER. PROVIDE THE SPECIAL INSPECTOR WITH TWO COPIES OF ALL STRUCTURAL CHANGES, REVISIONS, ADDENDA, ETC.

B. THE OWNER SHALL ENSURE THAT THE CONTRACTOR PROVIDES TO THE ENFORCING AGENCY, ARCHITECT, STRUCTURAL ENGINEER OF RECORD AND THE SPECIAL INSPECTOR A SHORING AND RE-SHORING PLAN WHICH IS SIGNED AND SEALED BY A DELEGATED ENGINEER REGISTERED IN THE STATE OF FLORIDA.

C. THE OWNER SHALL ENSURE THAT A QUALIFIED TESTING AGENCY IS RETAINED. SEE CONTRACT DOCUMENTS FOR REQUIREMENTS.

D. THE OWNER SHALL ENSURE THAT A GEOTECHNICAL CONSULTANT IS RETAINED TO CONFIRM THAT THE SPECIFIED FOUNDATION PREPARATION IS PERFORMED.

PART II

2.01 GENERAL

THE FOLLOWING IS A GENERAL INSPECTION PLAN DESCRIBING WORK TO BE PERFORMED BY THE SPECIAL INSPECTOR. THE INTENT IS TO DESCRIBE MINIMUM LEVELS NECESSARY TO CONFIRM THAT WORK COMPLIES WITH THE DESIGN DOCUMENTS. THE FOLLOWING ARE NOT INSPECTOR CHECK LISTS BUT POINT OUT SOME CRITICAL AREAS REQUIRING SPECIFIC ATTENTION BY THE SPECIAL INSPECTOR.

2.02 FOLLOWING IS A DESCRIPTION OF THE STRUCTURAL SYSTEM EMPLOYED FOR THIS PROJECT:

2.03 SPECIAL CONDITIONS/CRITICAL COMPONENTS

2.04 FOUNDATIONS

A. SHALLOW FOUNDATIONS:

1. THE GEOTECHNICAL CONSULTANT RETAINED BY THE OWNER WILL INSPECT SHALLOW FOUNDATIONS AND ALL FOOTING AREAS TO CONFIRM THAT SPECIFIED DESIGN SOIL CAPACITIES ARE MET. THE GEOTECHNICAL CONSULTANT WILL FURNISH THE SPECIAL INSPECTOR WITH DAILY REPORTS AS WELL AS A SUMMARY REPORT, SIGNED AND SEALED BY A FLORIDA P.E., STATING THAT THE FOUNDATION PREPARATION WAS COMPLETED ACCURATELY AND COMPLETELY SO AS TO ALLOW THE FOUNDATION TO FUNCTION AS INTENDED.
2. THE TESTING AGENCY RETAINED BY THE OWNER WILL MONITOR AND TEST BACKFILL AND COMPACTION OPERATIONS. THE TESTING AGENCY WILL SUBMIT A COPY OF REPORTS ON THESE OPERATIONS TO THE SPECIAL INSPECTOR, SIGNED AND SEALED BY A FLORIDA P.E..

B. FOOTINGS:

1. REVIEW CONFIGURATION AND PLACEMENT OF REINFORCEMENT FOR COMPLIANCE WITH THE CONTRACT DOCUMENTS. OBSERVE THAT CLEARANCES ARE PROPERLY MAINTAINED.
2. REVIEW DOWEL AND LAP SPLICE LENGTHS FOR COMPLIANCE WITH THE CONTRACT DOCUMENTS.
3. OBSERVE CONCRETE PLACEMENT AS OUTLINED IN THE CAST-IN-PLACE CONCRETE SECTION OF THIS INSPECTION PLAN.

2.05 CAST-IN-PLACE CONCRETE

A. THE CONTRACTOR IS TO NOTIFY THE SPECIAL INSPECTOR A MINIMUM OF 24 HOURS PRIOR TO THE PLACEMENT OF ANY STRUCTURAL CONCRETE.

B. REINFORCING STEEL:

1. USING THE STRUCTURAL DRAWINGS, INSPECT GRADE, SIZE, QUANTITY, CONFIGURATION AND SPACING OF REINFORCING FOR COMPLIANCE WITH THE STRUCTURAL DRAWINGS SUPPLEMENTED WITH SHOP DRAWINGS. PRIOR TO CONCRETE PLACEMENT REPORT ANY NOTED CONFLICT AND CONFIRM THAT THE CORRECTIONS ARE MADE BEFORE CONCRETE IS POURED.
2. CHECK MINIMUM CLEARANCE REQUIREMENTS FROM CONCRETE SURFACES.
3. CHECK THAT REINFORCING IS ADEQUATELY SUPPORTED AND TIED TO RESIST DISPLACEMENT OR SHIFTING DURING POUR.
4. CHECK THAT REBAR SURFACES ARE FREE OF EXCESS RUST OR OTHER COATINGS THAT MAY ADVERSELY AFFECT BONDING CAPACITY. IF OILING OF FORMS IS REQUIRED, CHECK THAT IT IS APPLIED BEFORE REINFORCING IS PLACED.
5. CHECK SPLICE LOCATIONS AND REQUIRED LENGTH OF LAP. CHECK THAT THE ACCEPTED MECHANICAL COUPLERS ARE PROPERLY INSTALLED PER MANUFACTURER'S SPECIFICATIONS. REPORT ANY DEVIATIONS FROM THE CONTRACT DOCUMENTS BEFORE CONCRETE IS CAST AND CONFIRM THAT CORRECTIONS ARE MADE.
6. CHECK INSTALLATIONS OF HOOKED BARS FOR COMPLIANCE WITH THE CONTRACT DOCUMENTS.

C. COLUMNS:

INSPECT REINFORCING STEEL, DOVETAIL SLOTS AND OTHER EMBEDDED ITEMS. CHECK TIE SPACING, ESPECIALLY DOUBLE TIES AND TIES AT DEEP BEAM INTERSECTIONS.

D. BEAMS:

INSPECT REINFORCING STEEL. CHECK TIE SPACING, INCLUDING LOCATION OF FIRST TIE. CHECK FOR HOOKED BOTTOM BARS. CHECK THAT HOOKED BARS EXTEND TO FAR FACE OF SUPPORT.

E. ONE WAY SLABS:

INSPECT REINFORCING STEEL, INCLUDING TEMPERATURE STEEL. CHECK THAT HOOKED BARS EXTEND TO FAR FACE OF SUPPORT.

L. OPENINGS:

1. REPORT ALL SLAB OPENINGS LARGER THAN 12" AND NOT SHOWN ON THE CONTRACT DOCUMENTS TO THE ARCHITECT/ENGINEER. CHECK PLACEMENT OF ADDITIONAL REINFORCEMENT AROUND OPENINGS. NO SLEEVES OR OPENINGS WILL BE PERMITTED IN BEAMS WITHOUT PRIOR APPROVAL OF THE ARCHITECT/ENGINEER.

M. CHECK THAT ALL FOREIGN MATERIAL HAS BEEN REMOVED FROM SPACES WHICH CONCRETE IS TO OCCUPY.

N. THE SPECIAL INSPECTOR SHALL BE ON SITE WHEN CONCRETE IS BEING PLACED FOR THE PRIMARY STRUCTURAL FRAME AS NECESSARY TO ASCERTAIN THAT PROPER CONCRETING PRACTICES, AS REQUIRED BY ACI 301, ASTM C94 AND OTHER RECOGNIZED INDUSTRY STANDARDS ARE FOLLOWED. OBSERVATIONS BY THE SPECIAL INSPECTOR SHALL INCLUDE, BUT NOT BE LIMITED TO VERIFICATION OF THE FOLLOWING:

1. TESTING AGENCY IS ON SITE AND THAT MIXING TIME, TEMPERATURE, SLUMP, AND AIR CONTENT ARE AS SPECIFIED. CHECK THAT ADDITION OF WATER TO THE CONCRETE MIX IN THE FIELD IS BASED ON THE GUIDELINES SET FORTH IN THE CONTRACT DOCUMENTS.
2. THE CONCRETE AS DELIVERED TO THE PROJECT SITE IS AS SPECIFIED FOR THAT PORTION IN WHICH PLACEMENT IS TO OCCUR.
3. CONCRETE IS BEING CONVEYED FROM MIXER TO PLACE OF FINAL DEPOSIT BY RECOGNIZED INDUSTRY STANDARDS. CONCRETE IS BEING DEPOSITED CONTINUOUSLY, OR IN LAYERS OF SUCH THICKNESS THAT NO CONCRETE WILL BE DEPOSITED ON CONCRETE WHICH AS HARDENED SUFFICIENTLY TO CAUSE THE FORMATION OF SEAMS OR PLANES OF WEAKNESS WITHIN THE AREA OF PLACEMENT.
4. CONCRETE IS BEING CONSOLIDATED AND THOROUGHLY WORKED AROUND REINFORCEMENT, EMBEDDED ITEMS AND INTO CORNERS OF FORMS, ELIMINATING AIR OR STONE POCKETS WHICH MAY CAUSE HONEYCOMBING, PITTING OR PLANES OF WEAKNESS.
5. CURING PROCEDURES ARE AS PER CONTRACT DOCUMENTS, ACI 308 "STANDARD PRACTICE FOR CURING CONCRETE" AND OTHER RECOGNIZED INDUSTRY STANDARDS.

O. AFTER THE FORMWORK HAS BEEN REMOVED, INSPECT CONCRETE SURFACES FOR HONEYCOMBING AND VOIDS.

2.06 STRUCTURAL STEEL AND PRE-ENGINEERED METAL BUILDING

A. INSPECT STRUCTURAL STEEL PRIOR TO CONCEALMENT TO VERIFY GRADE, SIZES, CONNECTIONS, STRAIGHTNESS AND FINISH. CHECK WITH CONTRACT DOCUMENTS AND SHOP DRAWINGS.

B. INSPECT SETTING OF ANCHOR BOLTS, EMBEDS AND OTHER MISCELLANEOUS STRUCTURAL ITEMS PRIOR TO CONCRETING. VERIFY, SIZE, QUANTITY AND FINISH.

C. INSPECT CONNECTIONS FOR THE FOLLOWING:

1. BOLTED CONNECTIONS: TYPE, SIZE AND NUMBER OF BOLTS. CHECK THAT BOLTS ARE CLEAN AND LUBRICATED AND HAVE PROPER WASHERS AND THAT THEY CONFORM TO THE SPECIFICATIONS. CHECK THAT BOLT HOLES ARE THE SPECIFIED TYPE AND SIZE. VERIFY THAT BOLTS ARE PROPERLY TIGHTENED. FOR SLIP-CRITICAL BOLTS WITH LOAD INDICATOR WASHERS, CHECK ALL BOLTS VISUALLY AND 10% WITH A FEELER GAUGE. "TURN OF THE NUT" METHOD IS NOT ACCEPTABLE.
2. WELDED CONNECTIONS: VERIFY THAT WELDERS ARE AWS CERTIFIED FOR THE TYPE OF WELDS BEING MADE. VISUALLY EXAMINE ALL WELDS FOR TYPE, SIZE AND LENGTH FOR COMPLIANCE WITH THE STRUCTURAL DRAWINGS. VERIFY THAT REQUIRED NON-DESTRUCTIVE TESTING IS PERFORMED BY THE TESTING AGENCY. VERIFY THAT WELDS ARE CLEAN, FREE FROM SLAG, AND THAT RUST PROTECTION HAS BEEN APPLIED AS PER SPECIFICATIONS.

D. HEADED STUD ANCHORS CHECK FOR SIZE, LENGTH, SPACING AND WELDING.

E. REVIEW ERECTION OF TRUSSES FOR COMPLIANCE WITH CONTRACT DOCUMENTS AND ERECTION DRAWINGS.

F. OPEN WEB STEEL JOISTS:

1. INSPECT STEEL JOISTS TO VERIFY TYPE, SIZE, SPACING, CONNECTIONS, STRAIGHTNESS AND FINISH. INSPECT FROM CONSTRUCTION DOCUMENTS AND SHOP DRAWINGS.
2. CHECK THAT BEARING CONDITIONS CONFORM TO REQUIREMENTS OF S.J.I. AND CONTRACT DOCUMENTS.
3. VERIFY THAT THE TEMPORARY BRACING AND PERMANENT CROSS-BRIDGING ARE BEING IMPLEMENTED PER REQUIREMENTS OF THE CONSTRUCTION DOCUMENTS AND ERECTION DRAWINGS.
4. INSPECT SETTING OF SHELF ANGLES, BEARING PLATES AND MISCELLANEOUS STRUCTURAL ITEMS TO VERIFY SIZE, QUANTITY, LOCATIONS AND FINISH.
5. VISUALLY EXAMINE ALL FIELD WELDS.VERIFY THAT WELDERS ARE AWS CERTIFIED.

G. STEEL DECKS CHECK FOR TYPE, SIZE AND GAGE.CHECK CONNECTION SUPPORTS. CHECK THAT WELDING WASHERS ARE USED IF DECK IS LIGHTER THAN 22 GAGE STEEL. CHECK THAT WELDING IS IN CONFORMANCE WITH CONTRACT DOCUMENTS.

2.07 MASONRY

THE SPECIAL INSPECTOR SHALL OBSERVE INSTALLATION TECHNIQUES OF LOAD BEARING MASONRY ONLY. THIS WILL INCLUDE WORKMANSHIP; UNITS USED INCLUDING SIZE, STRENGTH AND WEIGHT; MORTAR AND GROUT TYPE AND MIXING; PLACEMENT OF REINFORCING STEEL, INCLUDING HORIZONTAL REINFORCEMENT; INSERTS; ANCHORS; AND OTHER STRUCTURALLY RELATED ASPECTS. CHECK CLEANOUT AREAS. CHECK THAT CELLS TO BE REINFORCED ARE CLEAN AND FREE OF ALL FOREIGN MATERIAL. DURING GROUTING, CHECK THAT ALL CELLS ARE FILLED SOLID AND, AFTER COMPLETION, IF IN DOUBT, TEST WITH A HAMMER TO VERIFY THAT CELLS ARE FILLED SOLID. CHECK TIE BEAM AND TIE COLUMN SPACING, SIZE AND REINFORCING.

PART III

3.01 MATERIALS TESTING

ALL TESTING REQUIREMENTS AS DEFINED IN THE CONTRACT DOCUMENTS SHALL BE ADHERED TO WITH COPIES OF RESULTS FORWARDED TO THE SPECIAL INSPECTOR. PRIOR TO EACH INSPECTION, THE SPECIAL INSPECTOR SHALL REVIEW ALL MATERIAL TESTS AND REPORT ON THEIR RESULTS. THE SPECIAL INSPECTOR MAY REQUEST THE OWNER'S REPRESENTATIVE TO AUTHORIZE ADDITIONAL TESTS IF REQUIRED BY UNFORESEEABLE EVENTS OR CONDITIONS. ALL MATERIALS TESTING MUST BE EXECUTED BY QUALIFIED LABORATORIES AND TESTING FIRMS.

3.02 SUBMITTALS

A. GENERAL:

CONTRACTOR MUST SUBMIT ONE COPY OF ALL STRUCTURAL SUBMITTALS (EXCLUDING CALCULATIONS) TO THE SPECIAL INSPECTOR FOR HIS RECORD AND USE. ALL SUBMITTALS SHALL BE REVIEWED AND ACCEPTED BY THE CONTRACTOR, ARCHITECT AND STRUCTURAL ENGINEER OF RECORD, AND SHALL CONTAIN APPROPRIATE EVIDENCE OF SUCH, PRIOR TO TRANSMITTING TO THE SPECIAL INSPECTOR.

B. THE SPECIAL INSPECTOR SHALL REVIEW AND BECOME FAMILIAR WITH ALL SUBMITTALS.

C. AS A MINIMUM THE FOLLOWING SHALL BE PROVIDED TO THE SPECIAL INSPECTOR:

1. SHORING AND RE-SHORING:

   SHORING AND RE-SHORING DRAWINGS AND FIELD REPORTS, SIGNED AND SEALED BY THE DELEGATED ENGINEER, SHALL BE FURNISHED TO THE SPECIAL INSPECTOR PRIOR TO PLACEMENT OF ANY CONCRETE OR STRUCTURAL ELEMENT WHICH IS DEPENDENT ON SUCH SHORING/RESHORING.

2. REINFORCING STEEL:

   FABRICATION AND PLACEMENT DRAWINGS AND BAR LISTS.

3. CONCRETE MIX DESIGNS:

   COPIES OF CONCRETE MIX DESIGNS FOR ALL PROPOSED STRENGTHS AND GRADES.

4. PRECAST/PRESTRESSED CONCRETE:

   ALL SUBMITTALS EXCEPT CALCULATIONS.

5. LOAD BEARING MASONRY:

   TEST REPORTS SHOWING ALL APPLICABLE DATA, INCLUDING UNIT GRADES, FOR MASONRY UNITS AND DESIGN MIXES FOR MORTAR AND GROUT.

6. STRUCTURAL STEEL:

   FABRICATION AND ERECTION DRAWINGS FOR ALL STRUCTURAL STEEL COMPONENTS. MILL REPORTS FOR ALL STEEL, WELDER CERTIFICATES.

7. OPEN WEB STEEL JOISTS:

   FABRICATION AND ERECTION DRAWINGS FOR ALL STEEL JOISTS.

8. STEEL DECKS:

   PIECE AND ERECTION DRAWINGS FOR ALL STEEL DECK.

9. MISCELLANEOUS METALS:

   FABRICATION AND ERECTION DRAWINGS FOR ALL STRUCTURAL METALS, SUCH AS EMBEDDED ANCHORS, CONNECTION PLATES, HANGERS, PRE-FABRICATED STEEL STAIRS, CATWALKS, ETC.

10. LIGHTGAGE FRAMING:

   LIGHTGAGE FRAMING SHOP AND ERECTION DRAWINGS.

C. ALTERNATES:

ALTERNATES WHICH ARE ACCEPTED SHALL BE PROVIDED TO THE SPECIAL INSPECTOR AS THEY BECOME AVAILABLE.

TO THE BEST OF OUR KNOWLEDGE, INFORMATION AND BELIEF, THESE STRUCTURAL PLANS CONFORM TO AND SATISFY THE REQUIREMENTS OF THE FLORIDA BUILDING CODE, 2017 (6TH EDITION), ACI 318-14, AND LOCAL CODES AS APPLICABLE

MASTER CONSULTING ENGINEERS, INC.
STRUCTURAL CONSULTANTS
5523 WEST CYPRESS ST., #200
TAMPA, FLORIDA 33607
813.287.3600 FAX 813.287.3622
www.mcengineers.com

THIS DRAWING AND ALL INFORMATION CONTAINED HEREIN IS THE SOLE PROPERTY OF MASTER CONSULTING ENGINEERS, INC. AND MAY NOT BE REPRODUCED, COPIED, ALTERED OR USED IN ANY WAY WITHOUT THE EXPRESS WRITTEN AUTHORIZATION FROM MASTER CONSULTING ENGINEERS, INC.

CA: 8426 PROJ NO. 2300-179
© COPYRIGHT 2018

FleischmanGarcia
ARCHITECTURE • PLANNING • INTERIOR DESIGN
SAFETY HARBOR OFFICE
195 FOURTH AVENUE NORTH
SAFETY HARBOR, FLORIDA 34695
PHONE (727) 725-8880
FAX (727) 725-3900
TAMPA OFFICE
324 HYDE PARK AVENUE, SUITE 300
TAMPA, FLORIDA 33606
PHONE (813) 251-4400
FAX (813) 251-1994
REGISTRATION NUMBER AA C000123
SARASOTA OFFICE
5967 CATTLEMEN LANE, SUITE 6
SARASOTA, FLORIDA 34232
PHONE (941) 342-9293
FAX (941) 342-9253

NEW TAMPA RECREATION CENTER ADDITION
TAMPA, FL 33647

THIS DESIGN AND DRAWING IS THE SOLE PROPERTY OF FLEISCHMANGARCIA. NO PART OF THIS WORK MAY BE REPRODUCED WITHOUT PRIOR WRITTEN PERMISSION FROM FLEISCHMANGARCIA.

I CERTIFY TO THE BEST OF MY KNOWLEDGE THAT THESE DRAWINGS COMPLY W/ ALL RELEVANT BUILDING CODES

FGA PROJECT NUMBER
18015

ISSUE DATE
11/07/18

STRUCTURAL INSPECTION PLAN

SHEET NUMBER
S1.3

11-07-18 John Weber T:\2000 Projects\2300 FleischGarcia\2300-179 New Tampa Rec Center Addition 2018\Drafting\Sdwg\S1.3.dwg
T:\2000 Projects\2300 FleischGarcia\2300-179 New Tampa Rec Center Addition 2018\Drafting\Sdwg\S1.3.dwg, 11/9/2018 10:19:16 AM, John

FOUNDATION PLAN NOTES:

1. SLAB ON GRADE TO BE 4" THICK CONCRETE OVER VAPOR BARRIER ON COMPACTED SUB-BASE AS PER GEOTECHNICAL REPORT AND REINFORCED WITH 6X6-W2.1XW2.1 W.W.F. (FLAT SHEETS) CENTERED IN SLAB. SUPPORT WELDED WIRE FABRIC WITH 2" SLAB BOLSTER OR APPROVED EQUAL @ 3'-0"(±) O.C. BOTH WAYS. USE OF CONCRETE BRICK IS NOT ALLOWED.
2. VAPOR BARRIER REQUIREMENTS/APPLICATION/INSTALLATION SHALL BE DONE AS PER ARCHITECTURAL OR MOISTURE CONSULTANT DOCUMENTS AND RECOMMENDATIONS. IF NONE ARE AVAILABLE, AT A MINIMUM THE FOLLOWING RECOMMENDATIONS SHALL BE FOLLOWED.
   A. VAPOR BARRIER SHALL CONFORM TO ASTM E-1745 , MEETS OR EXCEEDS CLASS "B".
   B. VAPOR BARRIER INSTALLATION SHALL FOLLOW MANUFACTURER'S INSTRUCTIONS AND ASTM E 1643-98.
   C. UNROLL VAPOR BARRIER WITH THE LONGEST DIMENSION PARALLEL WITH THE DIRECTION OF THE POUR.
   D. LAP VAPOR BARRIER OVER FOOTINGS AND SEAL TO FOUNDATION WALLS.
   E. OVERLAP JOINTS 6 INCHES AND SEAL WITH MANUFACTURER'S TAPE.
   F. SEAL ALL PENETRATIONS (INCLUDING PIPES) WITH MANUFACTURER'S PIPE BOOT.
   G. NO PENETRATION OF THE VAPOR BARRIER IS ALLOWED EXCEPT FOR REINFORCING STEEL AND PERMANENT UTILITIES.
   H. REPAIR DAMAGED AREAS BY CUTTING PATCHES OF VAPOR BARRIER, OVERLAPPING DAMAGED AREA 6 INCHES AND TAPING ALL FOUR SIDES WITH TAPE.
3. TOP OF SLAB ELEVATION SHOWN THUS '-_" ON PLAN EQUALS REFERENCE EL., FOR ACTUAL EL., SEE CIVIL DRAWINGS.
4. FOR TYPICAL FOUNDATION PLAN DETAILS, SEE DRAWINGS S3.1 & S3.2.
5. FOR GENERAL STRUCTURAL NOTES, SEE DRAWING S1.1.
6. FOR FOOTING SIZE AND REINFORCING, SEE SCHEDULE ON THIS DRAWING.
7. ( ) DENOTES TOP OF FOOTING ELEVATION.
8. TOP OF FOOTING: ELEVATION @ INTERIOR = (-0'-0") TYPICAL U.N.O.
9. FOR FLOOR SLAB DEPRESSION LOCATIONS AND LIMITS NOT SHOWN ON PLAN SEE ARCHITECTURAL DRAWINGS.
10. FOR PLAN DIMENSIONS NOT SHOWN, REFER TO ARCHITECTURAL DRAWINGS.
11. TYPICAL WALL REINFORCING SCHEDULE:
    A. 8"/12" CMU WALL REINFORCING, SEE PLAN AND WALL REINFORCING SCHEDULE FOR SIZE AND SPACING.
    B. ■ INDICATES ADDITIONAL (1)-#5 IN GROUT FILLED CELL.
    C. PROVIDE ADDITIONAL SCHEDULED VERTICAL IN FIRST (2) CELLS EACH SIDE OF ALL WALL OPENINGS, CORNERS AND INTERSECTIONS.

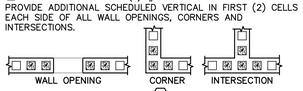

12. COLUMN DESIGNATION SHOWN THUS ⬡ ON PLAN. FOR SIZE AND REINFORCING SEE SCHEDULE THIS DRAWING.

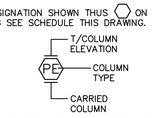

13. COORDINATE LOCATION OF (CJ) CONTROL JOINTS (SAWCUTS & TOOLED JOINTS) AT WALKWAY SLABS WITH ARCHITECTURAL DRAWINGS. CONTROL JOINTS AT EXPOSED TO WEATHER WALKWAYS SHALL BE TOOLED JOINTS SEE TYPICAL DETAIL 3-201 ON S3.1.
14. ALL CMU WALLS SHALL BE REINFORCED AS SHOWN ON PLAN WITH DOWELS TO MATCH, U.N.O. ALL CELLS AT REINFORCING LOCATION SHALL BE FILLED WITH GROUT. PROVIDE INSPECTION/CLEANOUT HOLE AT BASE WHEN POUR HEIGHT IS GREATER THAN 4'-0".
15. LOCATION OF MASONRY CONTROL JOINT NOT SHOWN. COORDINATE WITH ARCHITECTURAL ELEVATIONS. SEE TYPICAL DETAIL 4-002 ON S3.2.
16. RAIN LEADER SHOWN THUS ⊗ R.L ON PLAN. SEE PLUMBING DRAWINGS FOR SIZE AND LOCATIONS.
17. GENERAL CONTRACTOR TO COORDINATE LOCATION OF ALL WALL PENETRATIONS REQUIRED FOR MECHANICAL EQUIPMENT AND PROVIDE A PRECAST LINTEL AT ALL OPENINGS REFER TO TYPICAL DETAIL 4-033 ON S3.2.
18. MASONRY CONTROL JOINT SHOWN THUS ◄ MCJ ON PLAN. MAXIMUM SPACING OF JOINTS = 24'-0", COORDINATE LOCATION WITH THE ARCHITECTURAL & STRUCTURAL WALL ELEVATIONS. DO NOT LOCATE A MCJ CLOSER THEN 24" TO ANY CMU OPENING U.N.O.
20. PRE-ENGINEERED BUILDING MANUFACTURER COLUMN SET-BACK DIMENSION.

(2500 PSF) SOIL - WALL FOOTING/THICKENED SLAB SCHEDULE

MARK	SIZE	THICKNESS	TOP & BOTT. REINF. CONT.	TOP & BOTT. REINF. TRANSV.	REMARKS
WF2.0	2'-0" X CONT.	1'-4"	3-#5	#4 @ 24"	
TS-0.67	0'-8" X CONT.	1'-4"	1-#5	#3@32" OC	
TS-2.0	2'-0" X CONT.	1'-4"	3-#5	#3@24" OC	
TS-2.5	2'-6" X CONT.	2'-6"	6-#5	#4@12" OC	
TS-3.0	3'-0" X CONT.	2'-6"	9-#5	#4@12" OC	
TS-6.0	6'-0" X CONT.	2'-6"	19-#5	#4@12" OC	

NOTES:
1. PROVIDE CORNER BARS AT ALL FOOTING INTERSECTIONS. THE CORNER BARS SHALL MATCH SIZE AND NUMBER OF TOP AND/OR BOTTOM BARS IN FOOTING.
2. FOR CORNER BAR LAP SPLICE LENGTH SEE DETAIL 3-065/S3.1

(2500 PSF) COLUMN FOOTING SCHEDULE

MARK	SIZE	THICKNESS	TOP & BOTT. REINF. EACH WAY	REMARKS
F2.5	2'-6" X 2'-6"	1'-6"	5-#5	
F4.0	4'-0" X 4'-0"	1'-6"	4-#5	

CONCRETE COLUMN SCHEDULE

MARK	COLUMN SIZE	VERTICAL REINFORCING	TIE REINFORCING	REMARKS
C1	12" X 12"	4-#6	#3 @ 8" O.C.	-
C2	8" X 8"	4-#5	#3 @ 8" O.C.	-
C3	8" X 16"	8-#5	#4 @ 8" O.C.	-

STEEL COLUMN SCHEDULE

MARK	COLUMN SIZE	BASE PLATE SIZE	ANCHOR BOLTS	REMARKS
S1	HSS-4X4X1/4	10" X 10" X 1/2"	(4) 1/2"ø F1554 GRADE 36 BOLTS (12" EMBED)	-

NOTE:
1. SEE TYPICAL DETAIL 5-100 ON DRAWING S2.1 DOOR ANCHOR BOLT SCHEDULE.

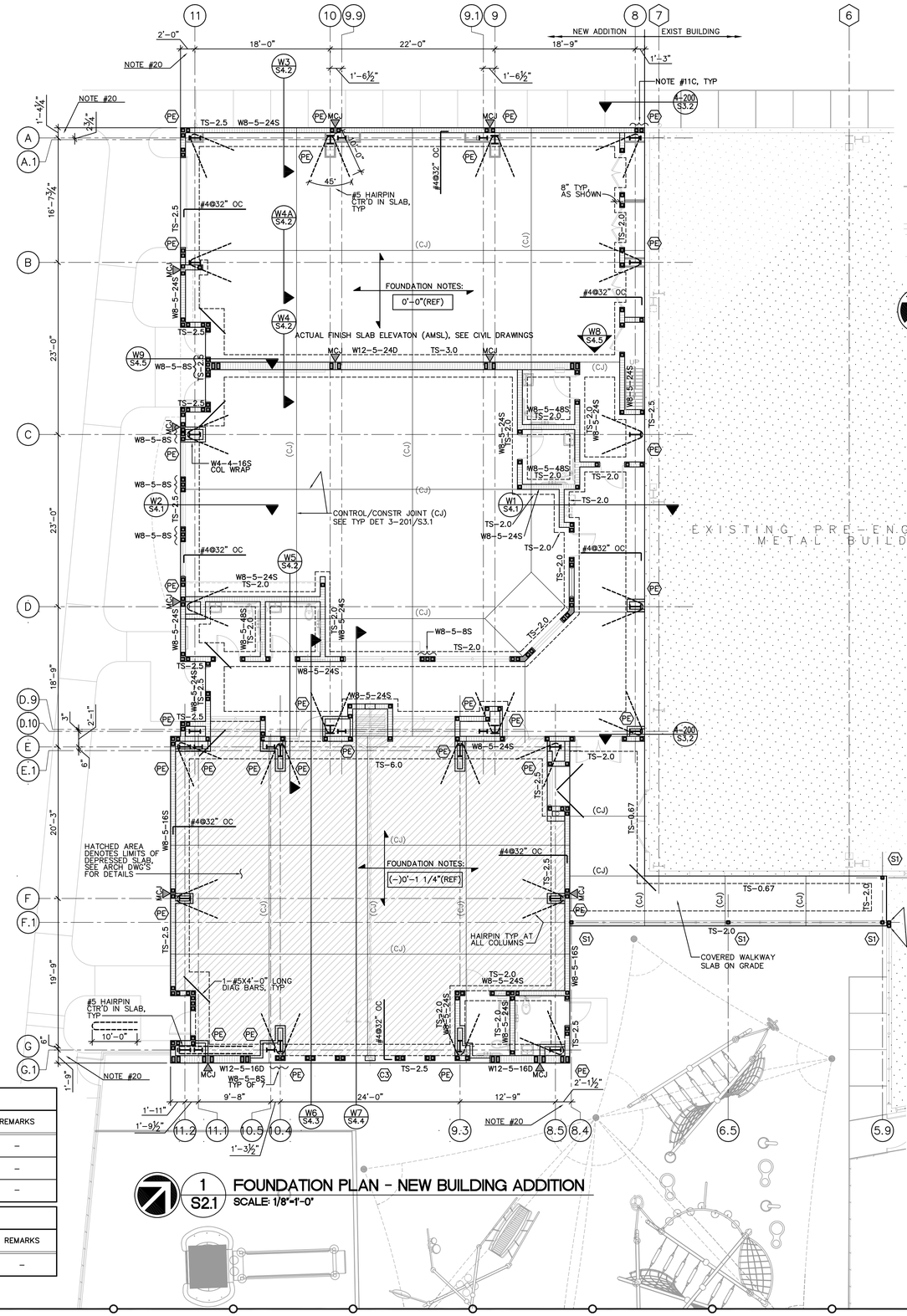

1 S2.1 FOUNDATION PLAN - NEW BUILDING ADDITION
SCALE: 1/8"=1'-0"

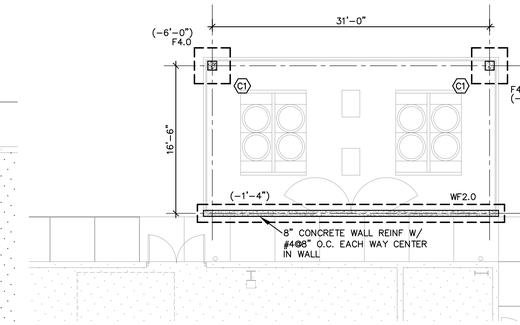

2 S2.1 FOUNDATION PLAN - MECH EQUIP YARD ENCLOSURE
SCALE: 1/8"=1'-0"

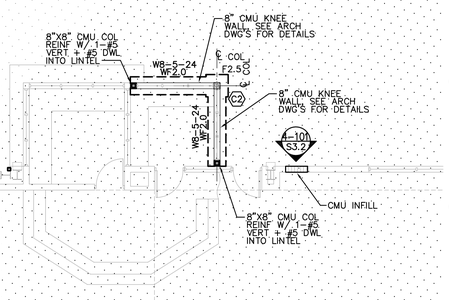

WALL REINFORCING SCHEDULE

TYPE	DESCRIPTION
W12-5-16D	12" CMU WALL REINF. W/ (2)#5@16" OC (1) EA FACE OF CELL
W12-5-24D	12" CMU WALL REINF. W/ (2)#5@24" OC (1) EA FACE OF CELL
W8-5-24S	8" CMU WALL REINF. W/ #5@24" OC
W8-5-16S	8" CMU WALL REINF. W/ #5@16" OC
W8-5-8S	8" CMU WALL REINF. W/ #5@8" OC (1) EA CELL
W8-5-8S	8" CMU WALL REINF. W/ #5@8" OC (1) EA CELL
W4-4-16S	4" CMU WALL REINF. W/ #4@16" OC

NOTE:
1. FOR CMU WALL REINFORCING LAP SPLIE AND PLACEMENT SCHEDULES REFER TO TYPICAL DETAILS 4-023 AND 4-026 ON DRAWING S3.2.

W8-5-24S/D — NO. OF BARS; S=SINGLE, D=DOUBLE; WALL SIZE; BAR SPACING; BAR SIZE

TO THE BEST OF OUR KNOWLEDGE, INFORMATION AND BELIEF, THESE STRUCTURAL PLANS CONFORM TO AND SATISFY THE REQUIREMENTS OF THE FLORIDA BUILDING CODE, 2017 (6TH EDITION), ACI 318-14, AND LOCAL CODES AS APPLICABLE

MASTER CONSULTING ENGINEERS, INC.
STRUCTURAL CONSULTANTS
5023 WEST CYPRESS ST., #200
TAMPA, FLORIDA 33607
813.287.9600 FAX 813.287.3622
www.mceengineers.com

CN: 8426 PROJ NO. 2200-179

THIS DRAWING AND INFORMATION CONTAINED HEREIN IS THE SOLE PROPERTY OF MASTER CONSULTING ENGINEERS, INC. AND MAY NOT BE REPRODUCED WITHOUT ANY WRITTEN REPRODUCTION WITHOUT THE EXPRESS WRITTEN AUTHORIZATION FROM MASTER CONSULTING ENGINEERS, INC.
© COPYRIGHT 2018

FleischmanGarcia
ARCHITECTURE · PLANNING · INTERIOR DESIGN
SAINT PETERSBURG OFFICE
105 FOURTH AVENUE NORTH
SAINT PETERSBURG, FLORIDA 33705
PHONE (727) 734-5880
FAX (727) 734-5888
TAMPA OFFICE
324 HYDE PARK AVENUE, SUITE 500
TAMPA, FLORIDA 33606
PHONE (813) 251-4400
FAX (813) 251-4488
SARASOTA OFFICE
3967 CATTLEMEN LANE, SUITE 6
SARASOTA, FLORIDA 34232
PHONE (941) 342-0293
FAX (941) 342-0297
REGISTRATION NUMBER AA C000123

NEW TAMPA RECREATION CENTER ADDITION

TAMPA, FL 33647

THE DESIGN AND DRAWING IS THE SOLE PROPERTY OF FLEISCHMAN/GARCIA, INC. PART OF THIS DRAWING MAY NOT BE REPRODUCED WITHOUT WRITTEN PERMISSION FROM FLEISCHMAN/GARCIA, INC.

I CERTIFY TO THE BEST OF MY KNOWLEDGE THAT THESE DRAWINGS COMPLY W/ ALL RELEVANT BUILDING CODES

FGA PROJECT NUMBER
18015

ISSUE DATE
11/07/18

FOUNDATION PLAN

SHEET NUMBER
S2.1

T:\2000 Projects\2200 Fleischman\2200-179 New Tampa Rec Center Addition 2018\Drafting\Dwg\S2.1.dwg, 11/9/2018 10:17:43 AM, John
John Weber T:\2000 Projects\2200 Fleischman\2200-179 New Tampa Rec Center Addition 2018\Drafting\Dwg\S2.1.dwg
11-09-18

MECHANICAL PLATFORM FRAMING NOTES:

1. TYPICAL PLATFORM FRAMING SHALL BE 1 1/2"– 20 GAGE NON–COMPOSITE GALVANIZED METAL DECK WITH 2 1/2" NORMAL WEIGHT CONCRETE TOPPING (TOTAL SLAB THICKNESS = 4") SPANNING OVER STRUCTURAL STEEL CHANNELS SPACED @ 5'–0" O.C. MAX., REINFORCE SLAB WITH 6X6XW2.1XW2.1 WWF (FLAT SHEETS) PLACED 1" BELOW FLOOR FINISH.
2. DIRECTION OF METAL DECK SPAN SHOWN THUS ⟶ ON PLAN.
3. TOP OF SLAB ELEVATION SHOWN THUS [– "] ON PLAN.
4. FOR GENERAL STRUCTURAL NOTES, SEE DRAWING S1.1.
5. FOR TYPICAL DETAILS, SEE DRAWING S3.1 AND S3.2.
6. PRE–ENGINEERED COLUMN DESIGNATIONS SHOWN THUS (PE) ON PLAN.
7. FOR LOAD SCHEDULE AND WIND DESIGN DATA, SEE DRAWING S1.2.
8. EMBED (WELD) PLATE SHOWN THUS EP–1 ON PLAN. FOR PLATE REQUIREMENTS SEE TYPICAL DETAIL 5–005 ON DRAWING S3.3.
9. CONTINUOUS METAL DECK SUPPORT L4X4X¼ BOLT TO WALL WITH ¾"ø HILTI EXPANSION BOLTS SPACED AT 24" OC AND 3" FROM ENDS.
10. CONTINUOUS METAL DECK CLOSURE L4X3X¼ (LLV) WELD TO EACH W8 BEAM AND C8 FLOOR JOIST.
11. POWERS LINTEL SHOWN THUS "PS–X" ON PLAN. FOR INFORMATION, SEE TYPICAL DETAIL 4–033 ON DRAWING S3.2.
12. PC LINTEL L5X3X⅜ WITH HOLES FOR (2) ¾"ø HILTI KWIK BOLT TZ.
13. LIGHT GAUGE METAL STUD AND TRACK FRAMING WITH PLYWOOD SHEATHING.

CONCRETE BEAM SCHEDULE

MARK	BEAM WIDTH	BEAM DEPTH	CONTINUOUS REINFORCING	STIRRUPS REINFORCING	REMARKS
CB–1	7 5/8"	24"	2–#5 T&B, 2–#5 MID	#3@8" OC	
CB–2	7 5/8"	16"	2–#5 T&B	#3@8" OC	

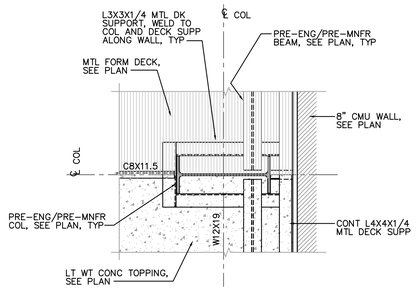

A / S2.2 DECK SUPPORT AT P.E. COLUMN
SCALE: 1/8"=1'–0"

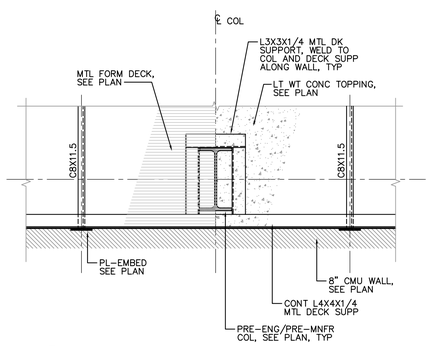

B / S2.2 DECK SUPPORT AT P.E. COLUMN
SCALE: 1/8"=1'–0"

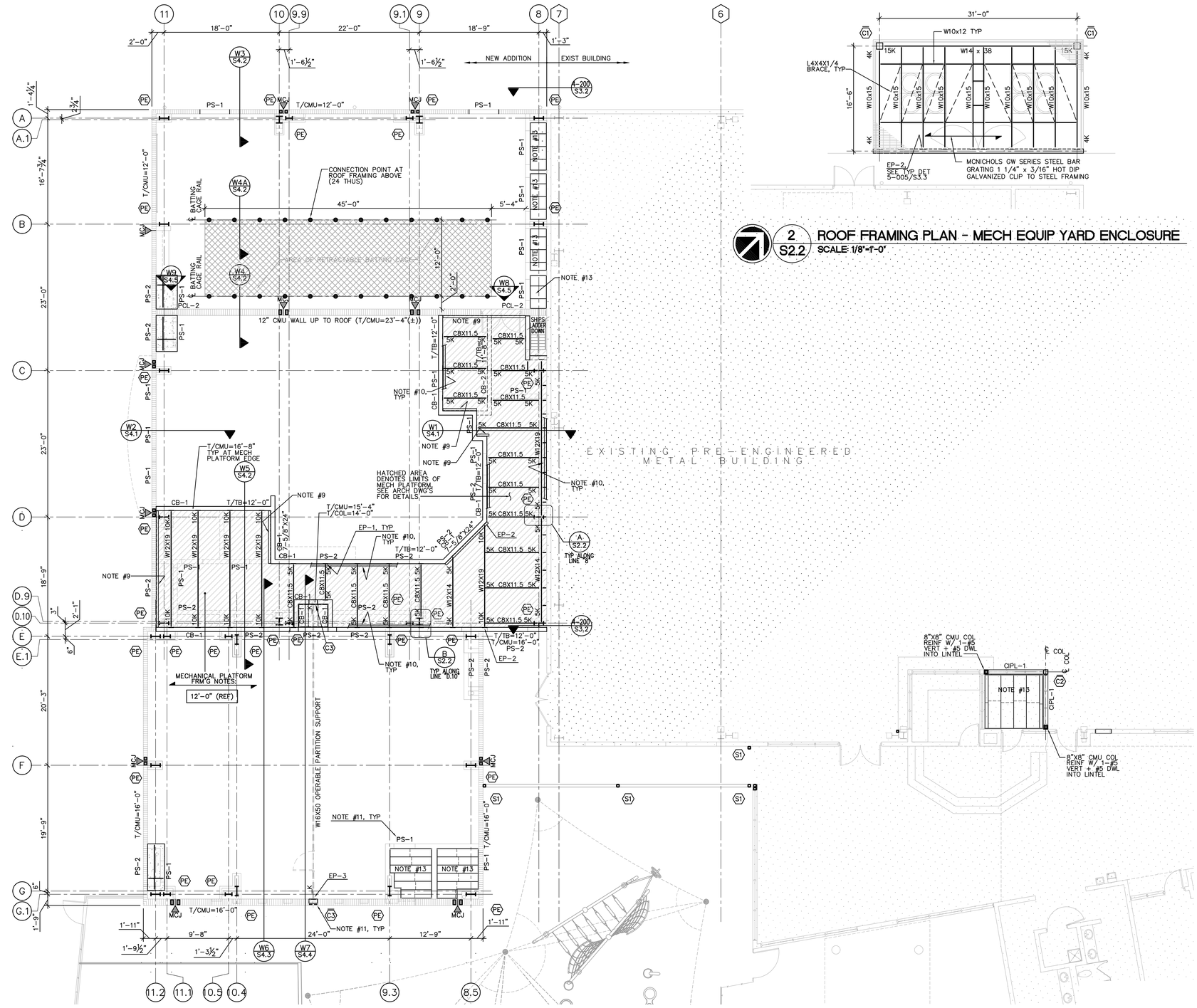

1 / S2.2 MECHANICAL PLATFORM FRAMING PLAN – NEW BUILDING ADDITION
SCALE: 1/8"=1'–0"

2 / S2.2 ROOF FRAMING PLAN – MECH EQUIP YARD ENCLOSURE
SCALE: 1/8"=1'–0"

TO THE BEST OF OUR KNOWLEDGE, INFORMATION AND BELIEF, THESE STRUCTURAL PLANS CONFORM TO AND SATISFY THE REQUIREMENTS OF THE FLORIDA BUILDING CODE, 2017 (6TH EDITION), ACI 318–14, AND LOCAL CODES AS APPLICABLE

MASTER CONSULTING ENGINEERS, INC.
STRUCTURAL CONSULTANTS
5023 WEST CYPRESS ST., #200
TAMPA, FLORIDA 33607
813.287.9600 FAX 813.287.3622
www.mceengineers.com
CA: 8426 PROJ NO. 2300–179

© COPYRIGHT 2017
THIS DRAWING AND INFORMATION CONTAINED HEREIN IS THE SOLE PROPERTY OF MASTER CONSULTING ENGINEERS, INC. AND MAY NOT BE REPRODUCED OR DISTRIBUTED TO ANY OTHER PARTY WITHOUT WRITTEN AUTHORIZATION FROM MASTER CONSULTING ENGINEERS, INC.

FleischmanGarcia
ARCHITECTURE · PLANNING · INTERIOR DESIGN
SAFTY HARBOR OFFICE
195 FOURTH AVENUE NORTH
SAFTY HARBOR, FLORIDA 34695
PHONE (727) 726-6800
FAX (727) 726-0600
324 HYDE PARK AVENUE, SUITE 350
TAMPA, FLORIDA 33606
PHONE (813) 251-4400
FAX (813) 251-2400
3967 CATTLEMEN LANE, SUITE 6
SARASOTA, FLORIDA 34232
PHONE (941) 342-0293
FAX (941) 342-0297
REGISTRATION NUMBER AA C000123

NEW TAMPA RECREATION CENTER ADDITION

TAMPA, FL 33647

THE DESIGN AND DRAWING IS THE SOLE PROPERTY OF FLEISCHMAN/GARCIA, INC. PART OF THIS WORK MAY NOT BE REPRODUCED WITHOUT PRIOR WRITTEN PERMISSION FROM FLEISCHMAN/GARCIA, INC.

I CERTIFY TO THE BEST OF MY KNOWLEDGE THAT THESE DRAWINGS COMPLY W/ ALL RELEVANT BUILDING CODES

FGA PROJECT NUMBER
18015

ISSUE DATE
11/07/18

MECHANICAL PLATFORM FRAMING PLAN

SHEET NUMBER
S2.2

T:\2000 Projects\2300 Fleisch/Garcia\2300-179 New Tampa Rec Center Addition 2018\Drafting\Dwg\S2.2.dwg, 11/07/2018 10:15:16 AM, John
11-07-18 John Weber T:\2000 Projects\2300 Fleisch/Garcia\2300-179 New Tampa Rec Center Addition 2018\Drafting\Dwg\S2.2.dwg

PRE-ENGINEERED/PRE-MANUFACTURERED ROOF FRAMING PLAN:

1. ROOF FRAMING SHALL BE PRE-FINISHED ARCHITECTURAL METAL ROOF DECK SPANNING OVER PRE-ENGINEERED/PRE-MANUFACTURED STEEL "Z" ROOF PURLINS AND WIDE FLANGE BEAMS AND GIRDERS.
2. FOR GENERAL STRUCTURAL NOTES, SEE DRAWING S1.1.
3. FOR TYPICAL DETAILS, SEE DRAWING S3.1 AND S3.4.
4. FOR WIND DESIGN DATA AND LOAD SCHEDULES, SEE DRAWIN S1.2.
5. DIRECTION OF METAL DECK SHOWN THUS ⟵⟶ ON PLAN.
6. FOR PLAN DIMENSIONS NOT SHOWN, SEE ARCHITECTURAL DRAWINGS.
7. (PE) DENOTES PRE-ENGINEERED STEEL COLUMN BY PRE-ENGINEERED METAL BUILDING MANUFACTURER.
8. BATTING CAGE RAIL CONNECTION POINT (12 THUS) PER RAIL SHOWN ON PLAN.PRE-ENGINEERED BUILDING MANUFACTURER TO PROVIDE SUPPORT FRAMING FOR POINT LOAD OF 50#.
9. OVERHEAD FAN, PRE-ENG BLD'G MANUFACTURER TO PROVIDE FRAMING TO SUPPORT A POINT LOAD OF 100 POUNDS COORDINATE WITH ARCHITECTURAL DRAWINGS FOR TYPE, SIZE AND LOCATION.

CORRIDOR ROOF FRAMING NOTES:

1. CORRIDOR ROOF FRAMING SHALL BE 1½" – 20 GA TYPE "B" GALVANIZED ROOF DECK SPANNING OVER WIDE FLANGE BEAMS SUPPORTED BY HSS-4X4X1/4 COLUMNS AND CONTINUOUS SUPPORT ANGLES BOLTED TO EXISTING WALLS AND DOUBLE ANGLE SHEAR CONNECTION TO EMBED PLATES AT NEW WALLS.
2. FOR GENERAL STRUCTURAL NOTES, SEE DRAWING S1.1.
3. FOR TYPICAL DETAILS, SEE DRAWING S3.1 AND S3.4.
4. FOR WIND DESIGN DATA AND LOAD SCHEDULES, SEE DRAWIN S1.2.
5. DIRECTION OF METAL DECK SHOWN THUS ⟵⟶ ON PLAN.
6. FOR PLAN DIMENSIONS NOT SHOWN, SEE ARCHITECTURAL DRAWINGS.
7. (S1) DENOTES ENGINEERED COLUMNS, SEE SCHEDULE ON DRAWING S2.1 FOR SIZE, BASE PLATE AND ANCHOR BOLTS.
8. EMBED/WELD PLATE SHOWN THUS EP-1 ON PLAN. FOR PLATE REQUIREMENTS, SEE TYPICAL DETAIL 5-005 ON DRAWING S3.3.
9. CONTINUOUS METAL DECK SUPPORT L4X4X¼ BOLT TO WALL WITH ⅜"ø HILTI EXPANSION BOLTS SPACED AT 24" OC AND 3" FROM ENDS
10. CONTINUOUS METAL DECK CLOSURE L4X3X¼ (LLV) WELD TO EACH W10.

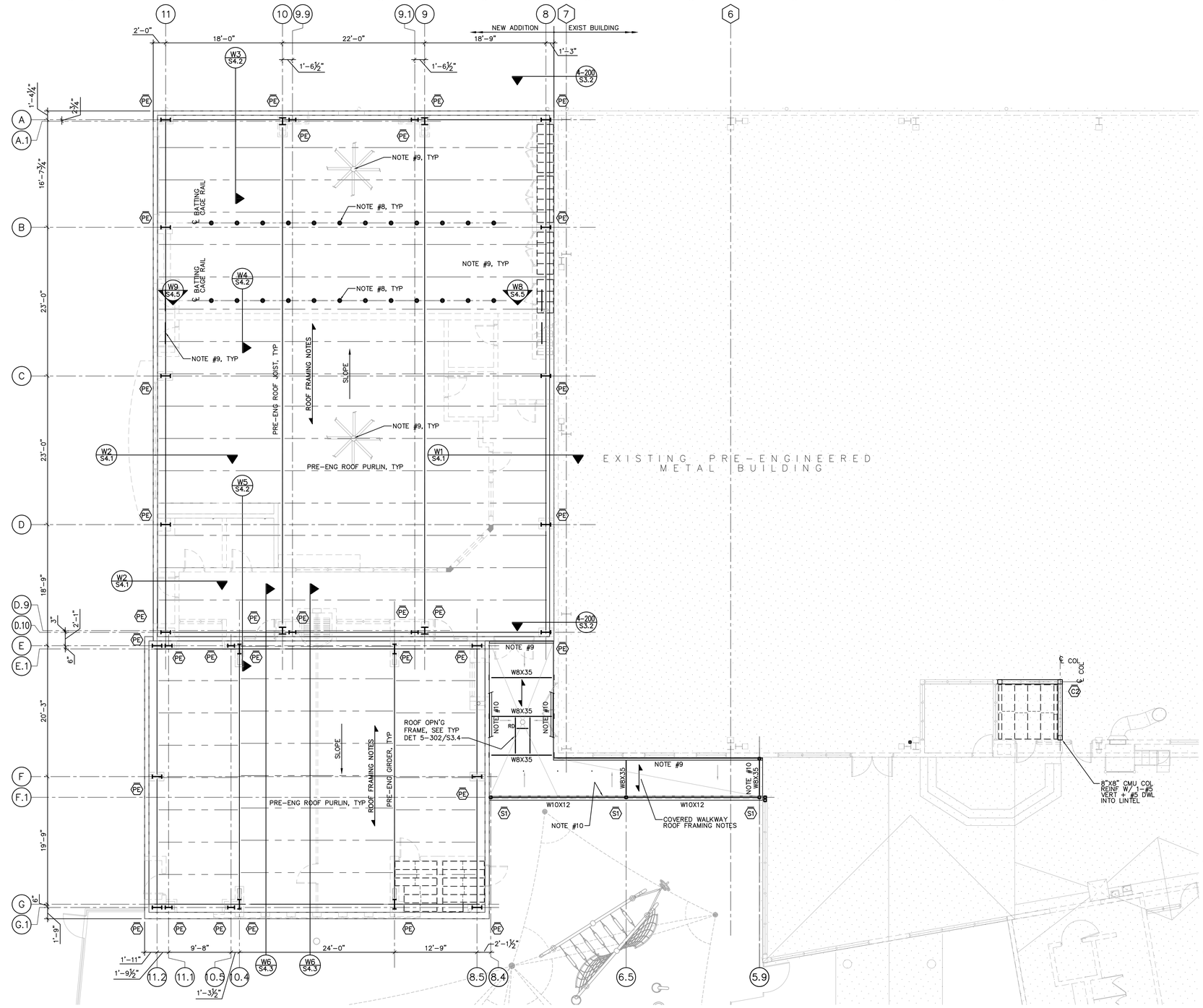

1 / S2.1 ROOF FRAMING PLAN - NEW BUILDING ADDITION
SCALE: 1/8"=1'-0"

TO THE BEST OF OUR KNOWLEDGE, INFORMATION AND BELIEF, THESE STRUCTURAL PLANS CONFORM TO AND SATISFY THE REQUIREMENTS OF THE FLORIDA BUILDING CODE, 2017 (6TH EDITION), ACI 318-14, AND LOCAL CODES AS APPLICABLE

MASTER CONSULTING ENGINEERS, INC.
STRUCTURAL CONSULTANTS
5023 WEST CYPRESS ST., #200
TAMPA, FLORIDA 33607
813.287.9600 FAX 813.287.3622
www.mceengineers.com

THIS DRAWING AND ALL INFORMATION CONTAINED HEREIN IS THE SOLE PROPERTY OF MASTER CONSULTING ENGINEERS, INC. AND MAY NOT BE REPRODUCED OR DISTRIBUTED WITHOUT THE EXPRESS WRITTEN AUTHORIZATION FROM MASTER CONSULTING ENGINEERS, INC.

CA: 8426 PROJ NO. 2200-179
© COPYRIGHT 2018

FleischmanGarcia
ARCHITECTURE · PLANNING · INTERIOR DESIGN
SAINT PETERSBURG OFFICE
195 FOURTH AVENUE NORTH
SAINT PETERSBURG, FLORIDA 33705
PHONE (727) 726-6800
FAX (727) 726-9068
TAMPA OFFICE
324 HYDE PARK AVENUE, SUITE 300
TAMPA, FLORIDA 33606
PHONE (813) 251-4400
FAX (813) 251-4411
ORLANDO OFFICE
5967 CATTLEMEN LAKE, SUITE 6
ORLANDO, FLORIDA 32822
PHONE (941) 342-0253
FAX (941) 342-0253
REGISTRATION NUMBER AA C000123

NEW TAMPA RECREATION CENTER ADDITION

TAMPA, FL 33647

THE DESIGN AND DRAWING IS THE SOLE PROPERTY OF FLEISCHMAN/GARCIA, INC. ANY REUSE OF THE WORK MAY NOT BE REPRODUCED WITHOUT THE WRITTEN PERMISSION FROM FLEISCHMAN/GARCIA, INC.

I CERTIFY TO THE BEST OF MY KNOWLEDGE THAT THESE DRAWINGS COMPLY WITH ALL RELEVANT BUILDING CODES

FGA PROJECT NUMBER
18015

ISSUE DATE
11/07/18

ROOF FRAMING PLAN

SHEET NUMBER
S2.3

T:\2000 Projects\2200 Fleisch/Garcia\2200-179 New Tampa Rec Center Addition 2018\Drafting\Dwg\S2.3.dwg 11/6/2018 10:13:59 AM John
John Weber T:\2000 Projects\2200 Fleisch/Garcia\2200-179 New Tampa Rec Center Addition 2018\Drafting\Sheets\S2.3.dwg
11-06-18

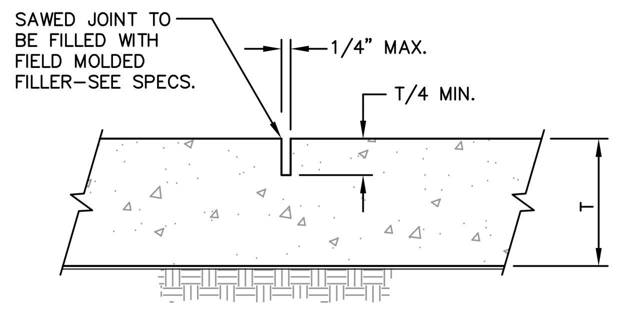

SAWED CONTROL JOINT DETAIL

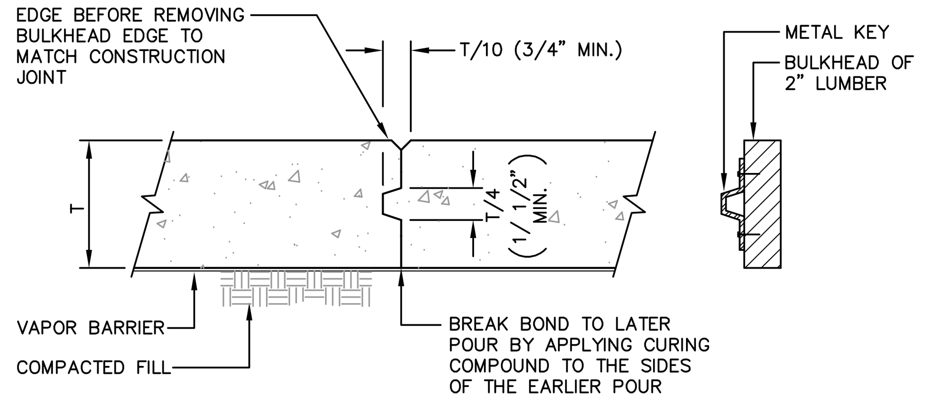

BULKHEAD DETAILS FOR CONSTRUCTION JOINT

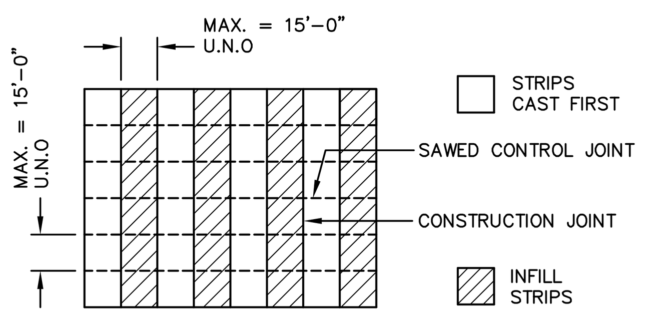

SLAB PLACEMENT SEQUENCE

NOTES:

1. CONCRETE FOR SLAB ON GRADE SHALL HAVE A MINIMUM COMPRESSIVE STRENGTH AS INDICATED ON THE "CONCRETE AND REINFORCING" NOTES.
2. SUPERPLASTICIZER SHALL BE USED IN SLAB ON GRADE CONCRETE – SEE SPECIFICATIONS.
3. SLAB ON GRADE CONCRETE MIX SHALL HAVE A WATER–CEMENT RATIO AS INDICATED IN SPECS AND OR NOTES.
4. CONSTRUCTION JOINTS SHALL BE LOCATED A MINIMUM OF 5'–0" AWAY FROM ANY OTHER JOINTS TO WHICH THEY ARE PARALLEL.
5. SAW CUTTING SHALL BE DONE WITH A POWER SAW WITH A MASONRY CUTTING BLADE. CUTTING SHALL BE DONE AS SOON AS CONCRETE HARDENS ENOUGH SO THAT THE BLADE DOES NOT DISLODGE THE AGGREGATES.
6. WHERE SAWCUT IS DISCONTINUED AT A TRANSVERSE JOINT, STOP CUT 2" SHORT.
7. SLAB REINFORING NOT SHOWN FOR CLARITY.

TYPICAL SLAB ON GRADE JOINT DETAILS

SCALE: N.T.S.

3–201

f'c = 3000 PSI, NORMAL WEIGHT

BAR SIZE	LAP CLASS	TENSION LAP SPLICES – LAP LENGTH PER SPACING AND COVER CASE – CASE 1 – TOP BARS	CASE 1 – OTHER BARS	CASE 2 – TOP BARS	CASE 2 – OTHER BARS	COMPRESSION LAP SPLICES
#3	A B	22 28	17 22	32 42	25 32	12
#4	A B	29 37	22 29	43 56	33 43	15
#5	A B	36 47	28 36	54 70	41 54	19
#6	A B	43 56	33 43	64 84	50 64	23
#7	A B	63 81	48 63	94 122	72 94	26
#8	A B	72 93	55 72	107 139	82 107	30
#9	A B	81 105	62 81	121 157	93 121	34
#10	A B	91 118	70 91	136 177	105 136	38
#11	A B	101 131	78 101	151 196	116 151	42

NOTES:

CASE 1

BEAMS AND COLUMNS:
CONCRETE COVER >/= TO BAR DIAMETER, C–C BAR SPACING >/= TO 2X BAR DIAMETER AND WITH STIRRUPS OR TIES THROUGHOUT TENSION LAP SPLICE LENGTH NOT LESS THAN THE CODE MINIMUM.

OTHER MEMBERS:
CONCRETE COVER >/= TO THE BAR DIAMETER AND C–C BAR SPACING >/= TO 3X BAR DIAMETER.

CASE 2

BEAMS AND COLUMNS:
CONCRETE COVER < BAR DIAMETER AND C–C BAR SPACING < 2X BAR DIAMETER.

OTHER MEMBERS:
CONCRETE COVER < BAR DIAMETER OR C–C BAR SPACING < 3X BAR DIAMETER.

* LAP CLASS "B" IS TO BE USED UNLESS OTHERWISE SPECIFIED IN THESE CONTRACT DOCUMENTS.

TENSION AND COMPRESSION LAP SPLICES WITH F'c = 3000 PSI

SCALE: N.T.S.

3–065

THE MINIMUM CLEAR COVER FOR REINFORCEMENT BARS SHALL BE ONE BAR DIAMETER OR THE VALUES TABULATED BELOW, WHICHEVER IS THE GREATER.		
SLABS (LT.WT. CONC. OR STONE CONC.)		1"
GIRDERS AND BEAMS (TO STIRRUPS)		1 1/2"
JOISTS (STONE OR LT.WT.) BOTTOM BARS		1 1/4"
TIED COLUMNS AND PIERS		
SURFACE EXPOSED TO EARTH AND WEATHER	(TO TIES)	2"
OTHER SURFACES	(TO TIES)	1 1/2"
FOUNDATION ELEMENTS		
FORMED SURFACES		2"
SURFACES PLACED AGAINST EARTH		3"
WALLS		
SURFACES EXPOSED TO EARTH		2"
SURFACES EXPOSED TO WEATHER		1 1/2"
OTHER SURFACES		1"

TYPICAL CONCRETE COVER FOR REINFORCING BARS

SCALE: N.T.S.

3–064

NOTE:

IN CASE OF CONFLICT BETWEEN INFORMATION SHOWN ON THIS DRAWING, SECTION DRAWINGS OR ARCHITECTURAL DRAWINGS, IT IS THE CONTRACTOR'S RESPONSIBILITY TO INFORM THE ARCHITECT AND ENGINEER OF SUCH CONFLICT IN ORDER TO RECEIVE A CLARIFICATION BEFORE PROCEEDING TO WORK. DIMENSIONS, SIZES AND REINFORCEMENT OF STRUCTURAL ELEMENTS SHOWN IN THIS DRAWING ARE MINIMUM TO BE USED UNLESS NOTED OTHERWISE (U.N.O.) IN PLANS.

f'c = 4000 PSI, NORMAL WEIGHT

BAR SIZE	LAP CLASS	TENSION LAP SPLICES – LAP LENGTH PER SPACING AND COVER CASE – CASE 1 – TOP BARS	CASE 1 – OTHER BARS	CASE 2 – TOP BARS	CASE 2 – OTHER BARS	COMPRESSION LAP SPLICES
#3	A B	19 24	15 19	28 36	22 28	12
#4	A B	25 32	19 25	37 48	29 37	15
#5	A B	31 40	24 31	47 60	36 47	19
#6	A B	37 48	29 37	56 72	43 56	23
#7	A B	54 70	42 54	81 106	63 81	26
#8	A B	62 80	48 62	93 121	71 93	30
#9	A B	70 91	54 70	105 136	81 105	34
#10	A B	79 102	61 79	118 153	91 118	38
#11	A B	87 113	67 87	131 170	101 131	42

NOTES:

CASE 1

BEAMS AND COLUMNS:
CONCRETE COVER >/= TO BAR DIAMETER, C–C BAR SPACING >/= TO 2X BAR DIAMETER AND WITH STIRRUPS OR TIES THROUGHOUT TENSION LAP SPLICE LENGTH NOT LESS THAN THE CODE MINIMUM.

OTHER MEMBERS:
CONCRETE COVER >/= TO THE BAR DIAMETER AND C–C BAR SPACING >/= TO 3X BAR DIAMETER.

CASE 2

BEAMS AND COLUMNS:
CONCRETE COVER < BAR DIAMETER AND C–C BAR SPACING < 2X BAR DIAMETER.

OTHER MEMBERS:
CONCRETE COVER < BAR DIAMETER OR C–C BAR SPACING < 3X BAR DIAMETER.

* LAP CLASS "B" IS TO BE USED UNLESS OTHERWISE SPECIFIED IN THESE CONTRACT DOCUMENTS.

TENSION AND COMPRESSION LAP SPLICES WITH F'c = 4000 PSI

SCALE: N.T.S.

3–066

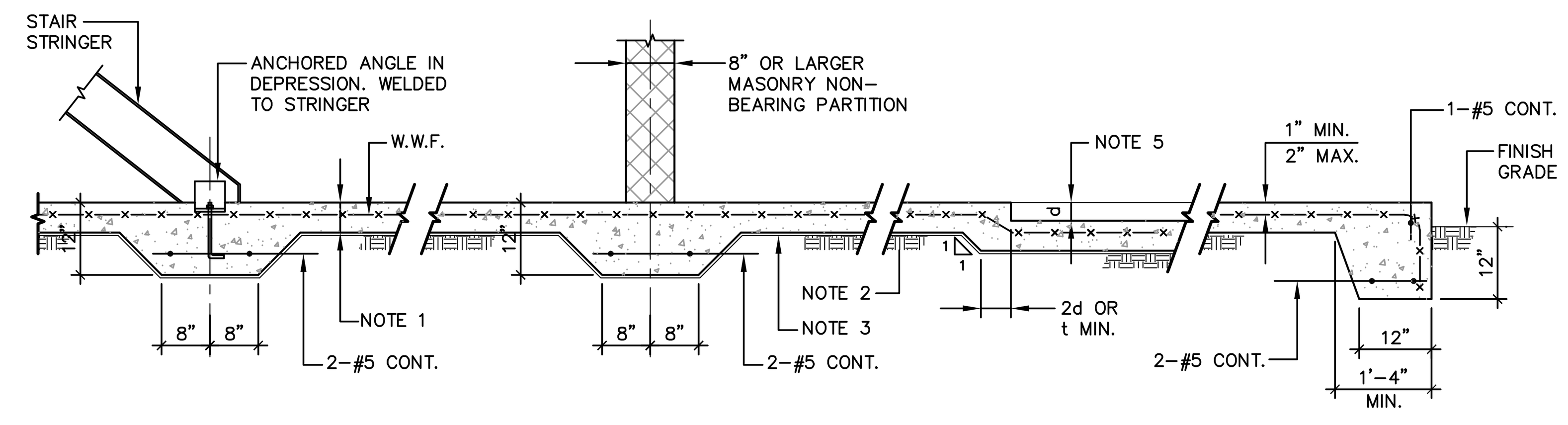

AT STAIR

HAUNCH AT PARTITION (NO JOINT)

AT DEPRESSION

EXTERIOR PLATFORM

UNLESS NOTED ON PLANS:

1. SEE FOUNDATION NOTES FOR SLAB THICKNESS AND REINFORCING.
2. SLABS SHALL BEAR ON COMPACTED FILL.
3. COMPACTED FILL SHALL BE COVERED WITH VAPOR BARRIER. SEE SPECS.
4. UNDER MACHINE EQUIPMENT DEEPEN SLAB TO 8" AND ADD TWO LAYERS OF WELDED WIRE FABRIC BOTTOM, U.N.O
5. FOR DEPRESSIONS – SEE ARCHITECTURAL DRAWINGS.
6. AT CONSTRUCTION JOINTS USE WOOD FORMS WITH SHEAR KEYS.
7. STOP WIRE MESH AT CONSTRUCTION JOINTS. CUT EVERY OTHER WIRE AT SAWCUT JOINT.
8. WHERE SLAB IS DOWELD INTO WALL, FIRST SLAB CONSTRUCTION JOINT TO BE NOT MORE THAN 15 FEET FROM WALL.
9. FOR EXPANSION JOINT LOCATION SEE PLAN. FOR DETAILS SEE ARCHITECTURAL DRAWINGS.

TYPICAL SLAB ON GRADE DETAILS

SCALE: N.T.S.

3–202

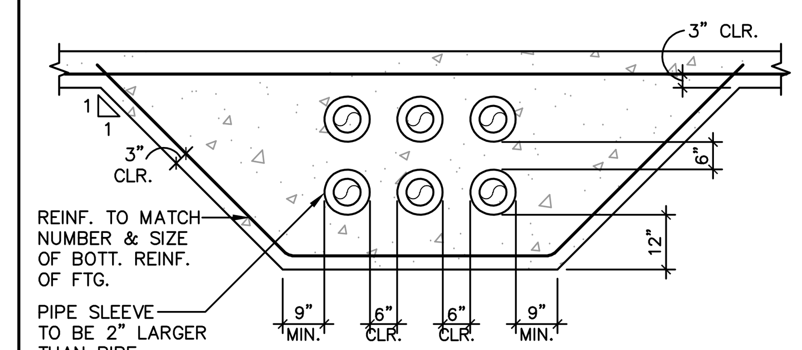

BANK OF PIPES DETAIL

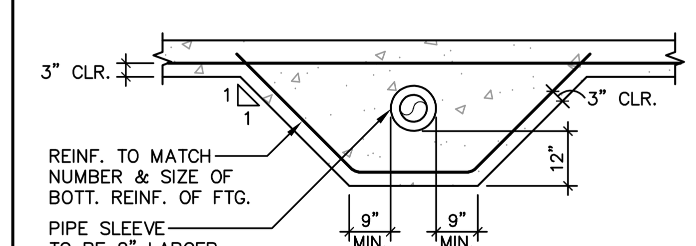

SINGLE PIPE DETAIL

PIPE SLEEVE DETAIL AT FOUNDATION

SCALE: N.T.S.

3–054

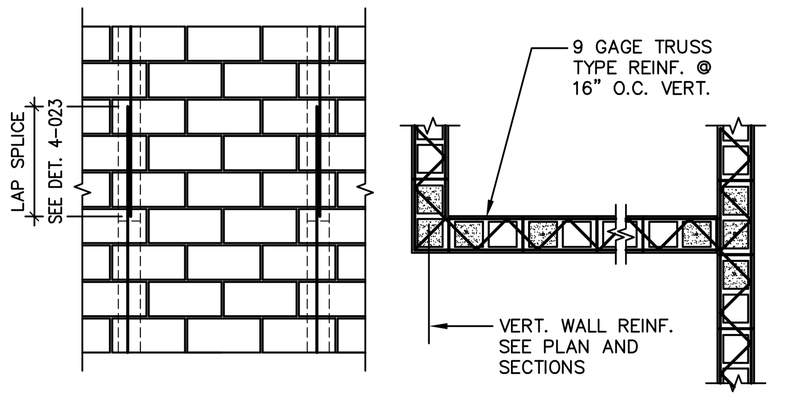

ELEVATION

PLAN

NOTE:

PROVIDE INSPECTION PORT AT BOTTOM OF LIFT. IF GROUT LIFT IS GREATER THAN 4'–0".

TYPICAL MASONRY WALL DETAIL

SCALE: 3/8" = 1'–0"

4–001

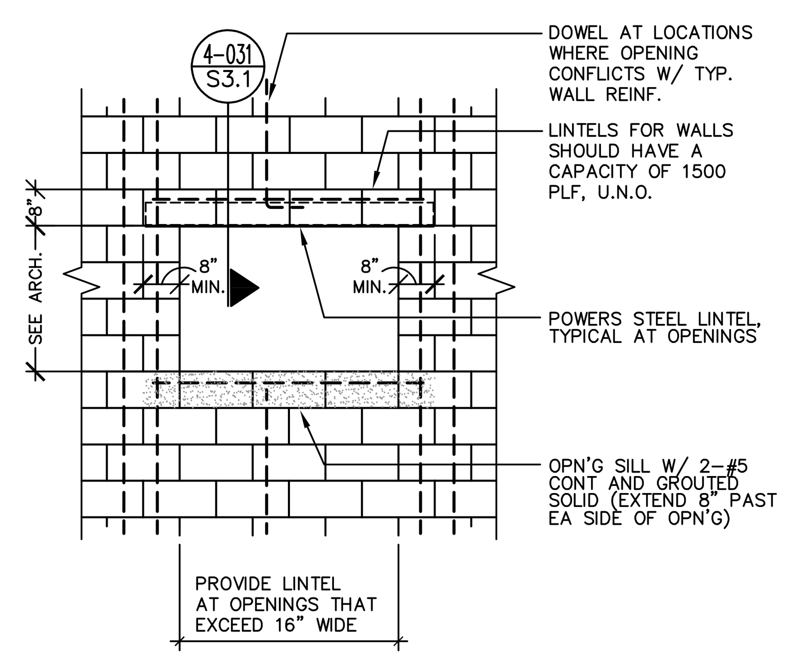

TYPICAL LINTEL OVER DUCT OPENING

SCALE: 3/8" = 1'–0"

4–004

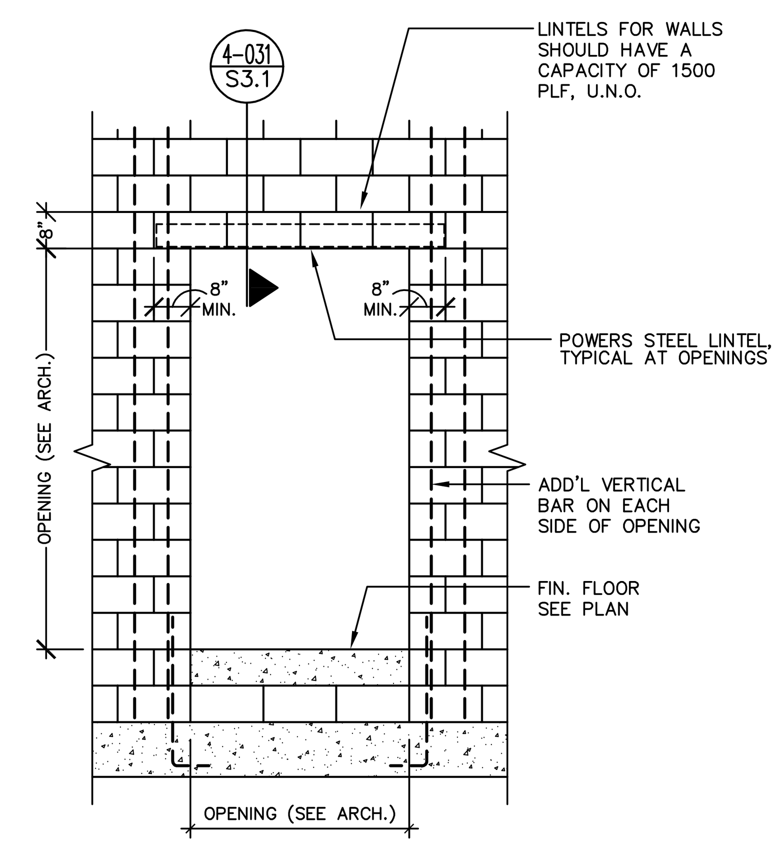

TYPICAL LINTEL OVER OPENING

SCALE: 3/8" = 1'–0"

4–005

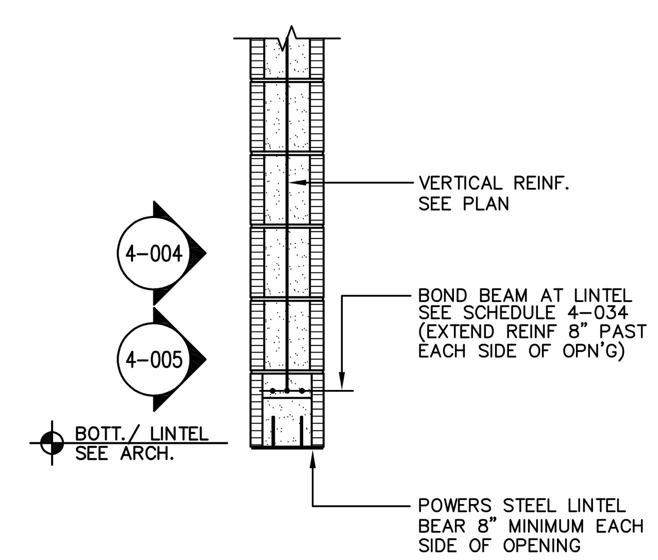

TYP. PRECAST LINTEL SECTION

SCALE: 3/4" = 1'–0"

4–031

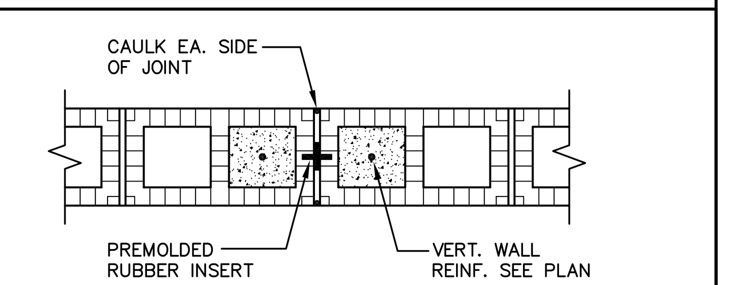

AT REGULAR BLOCKS

NOTE: DISCONTINUE HORIZ REINF AT JOINT

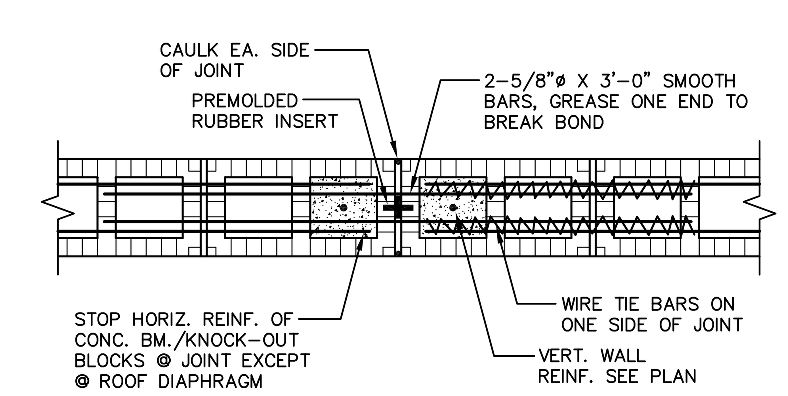

AT CONC. BM'S/KNOCK–OUT BLOCKS

NOTE: DISCONTINUE HORIZ REINF AT JOINT

MASONRY CONTROL JOINT

SCALE: 1" = 1'–0"

NOTE:
1. MAXIMUM SPACING OF CONTROL JOINT EQUALS 24'–0" OR THREE TIMES WALL HEIGHT (WHICH EVER IS SMALLER)

4–002

TO THE BEST OF OUR KNOWLEDGE, INFORMATION AND BELIEF, THESE STRUCTURAL PLANS CONFORM TO AND SATISFY THE REQUIREMENTS OF THE FLORIDA BUILDING CODE, 2017 (6TH EDITION), ACI 318–14, AND LOCAL CODES AS APPLICABLE

MASTER CONSULTING ENGINEERS, INC.
STRUCTURAL CONSULTANTS
5523 WEST CYPRESS ST., #200
TAMPA, FLORIDA 33607
813.287.3600 FAX 813.287.3622
www.mcengineers.com

THIS DRAWING AND ALL INFORMATION CONTAINED HEREIN IS THE SOLE PROPERTY OF MASTER CONSULTING ENGINEERS, INC. AND MAY NOT BE REPRODUCED, COPIED, ALTERED OR USED IN ANY WAY WITHOUT THE EXPRESS WRITTEN AUTHORIZATION FROM MASTER CONSULTING ENGINEERS, INC.

CA: 8426 PROJ NO. 2300–179

© COPYRIGHT 2018

FleischmanGarcia
ARCHITECTURE • PLANNING • INTERIOR DESIGN
SAFETY HARBOR OFFICE
195 FOURTH AVENUE NORTH
SAFETY HARBOR, FLORIDA 34695
PHONE (727) 725-8880
FAX (727) 725-3900
TAMPA OFFICE
324 HYDE PARK AVENUE, SUITE 300
TAMPA, FLORIDA 33606
PHONE (813) 251-4400
FAX (813) 251-1994
SARASOTA OFFICE
5967 CATTLEMEN LANE, SUITE 6
SARASOTA, FLORIDA 34232
PHONE (941) 342-9293
FAX (941) 342-9253
REGISTRATION NUMBER AA C000123

NEW TAMPA RECREATION CENTER ADDITION

TAMPA, FL 33647

THIS DESIGN AND DRAWING IS THE SOLE PROPERTY OF FLEISCHMANGARCIA. NO PART OF THIS WORK MAY BE REPRODUCED WITHOUT PRIOR WRITTEN PERMISSION FROM FLEISCHMANGARCIA.

I CERTIFY TO THE BEST OF MY KNOWLEDGE THAT THESE DRAWINGS COMPLY W/ ALL RELEVANT BUILDING CODES

FGA PROJECT NUMBER 18015

ISSUE DATE 11/07/18

TYPICAL DETAILS

SHEET NUMBER S3.1

T:\2000 Projects\2300 FleischGarcia\2300-179 New Tampa Rec Center Addition 2018\Drafting\Sdwg\S3.1 and S3.4.dwg, 11/9/2018 10:06:58 AM, John
11-07-18 John Weber T:\2000 Projects\2300 FleischGarcia\2300-179 New Tampa Rec Center Addition 2018\Drafting\Sdwg\S3.1 and S3.4.dwg

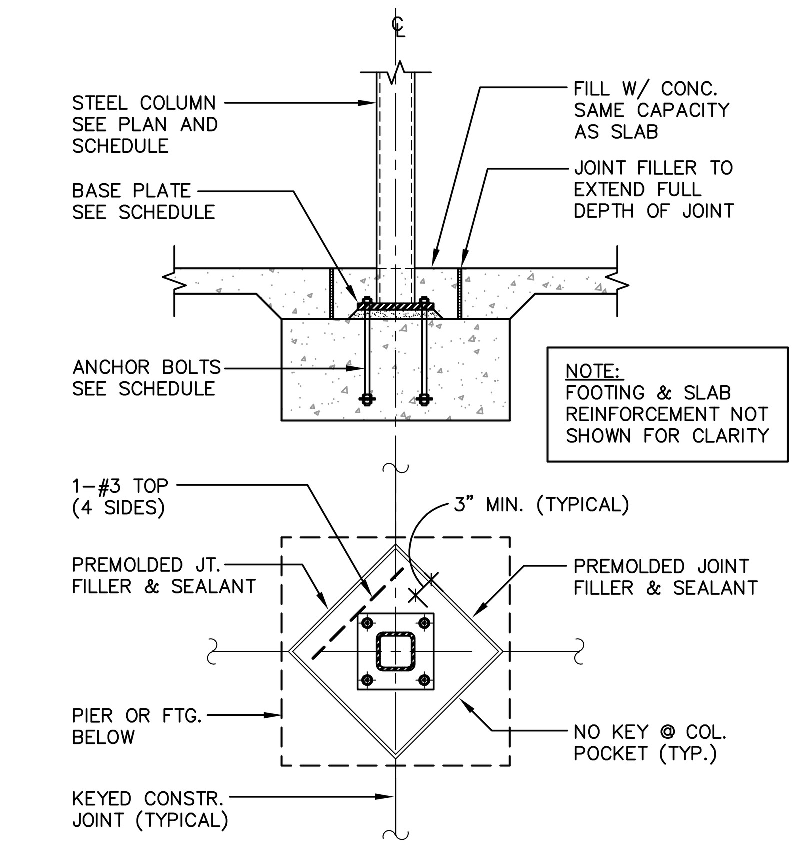

TYPICAL STEEL COLUMN ISOLATION JOINT DETAIL

SCALE: N.T.S.

3–013

LAP SPLICE SCHEDULE FOR SINGLE REINFORCED 8" CMU		
BAR SIZE	LAP SPLICE	REMARKS
#3	18	
#4	24	
#5	30	
#6	36	
#7	42	
#8	48	
#9	54	

NOTES:

1. LENGTH OF SPLICES ARE BASED ON FLORIDA BUILDING CODE (SIXTH EDITION) 2017.
2. LAP SPLICES INDICATED ARE IN INCHES.
3. THIS SCHEDULE IS FOR 8" CONCRETE MASONRY UNITS (CMU) ONLY.
4. SEE DETAIL FOR LAP SPLICE SCHEDULE FOR DOUBLE REINFORCED 8" CMU.

LAP SPLICE SCHEDULE SINGLE REINFORCED 8" CMU

4–023

LAP SPLICE SCHEDULE FOR DOUBLE REINFORCED 12" CMU		
BAR SIZE	LAP SPLICE	REMARKS
#3	18	
#4	24	
#5	30	
#6	36	
#7	42	
#8	48	
#9	54	

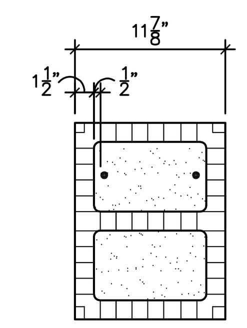

NOTES:

1. LENGTH OF SPLICES ARE BASED ON FLORIDA BUILDING CODE (SIXTH EDITION) 2017.
2. LAP SPLICES INDICATED ARE IN INCHES.
3. THIS SCHEDULE IS FOR 12" CONCRETE MASONRY UNITS (CMU) ONLY.

LAP SPLICE SCHEDULE DOUBLE REINFORCED 12" CMU

4–026

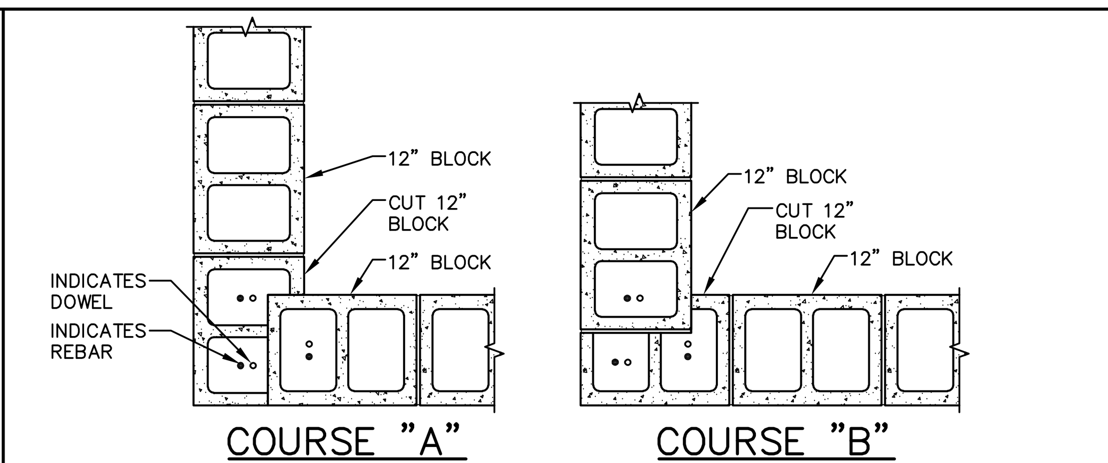

ALTERNATING BLOCK COURSE PATTERN 12" BLOCK @ CORNERS

SCALE: 3/4" = 1'–0"

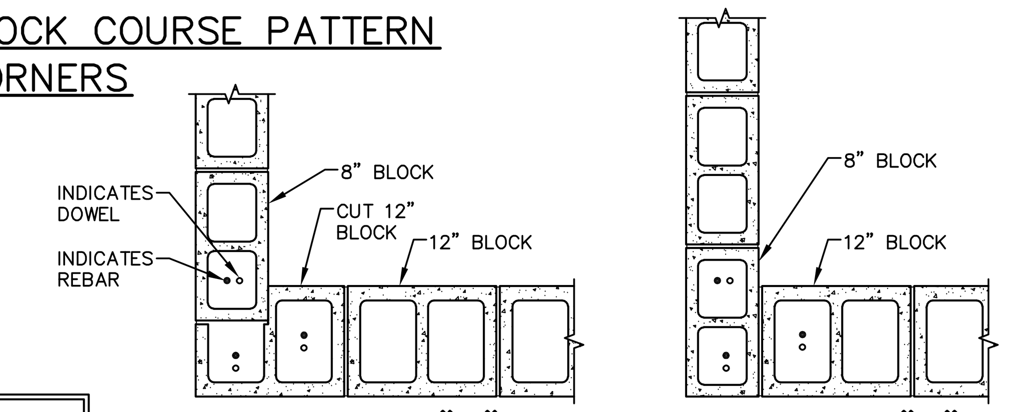

NOTES:

1. BAL. OF REINFORCEMENT NOT SHOWN FOR CLARITY.
2. SEE PLAN FOR VERTICAL AND HORIZONTAL WALL REINFORCEMENT.

ALTERNATING BLOCK COURSE PATTERN 12" BLOCK INTERSECTING W/ 8" BLOCK

SCALE: 3/4" = 1'–0"

4–083

NOTE:

IN CASE OF CONFLICT BETWEEN INFORMATION SHOWN ON THIS DRAWING, SECTION DRAWINGS OR ARCHITECTURAL DRAWINGS, IT IS THE CONTRACTOR'S RESPONSIBILITY TO INFORM THE ARCHITECT AND ENGINEER OF SUCH CONFLICT IN ORDER TO RECEIVE A CLARIFICATION BEFORE PROCEEDING TO WORK. DIMENSIONS, SIZES AND REINFORCEMENT OF STRUCTURAL ELEMENTS SHOWN IN THIS DRAWING ARE MINIMUM TO BE USED UNLESS NOTED OTHERWISE (U.N.O.) IN PLANS.

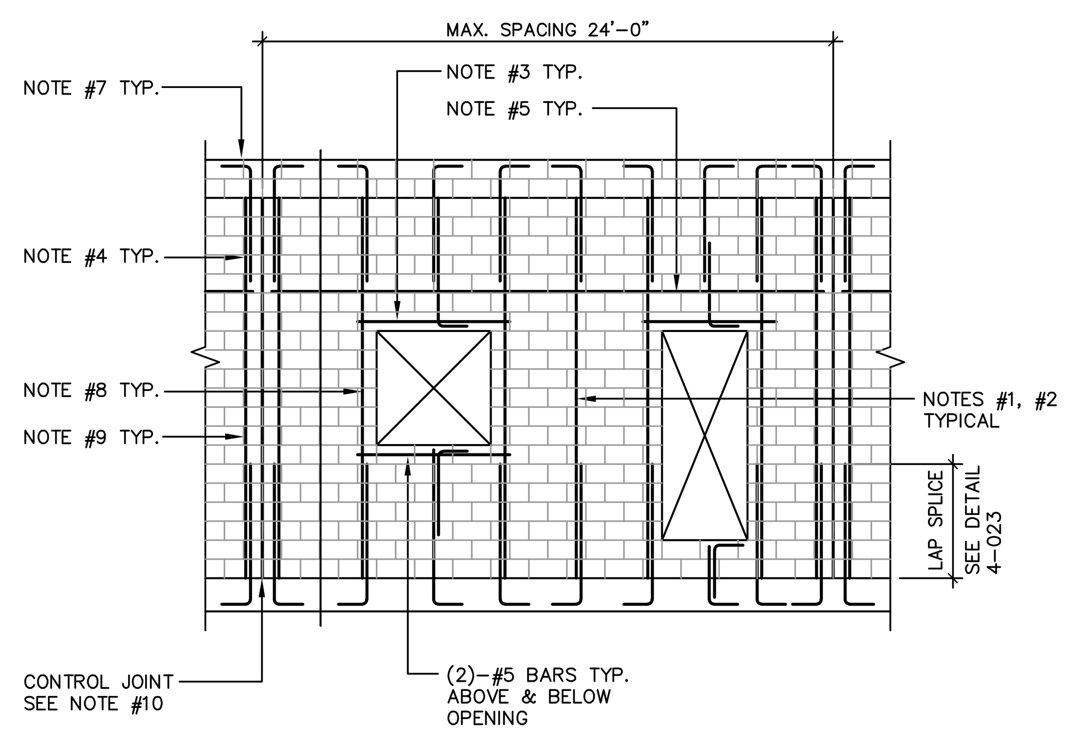

NOTES:

1. VERTICAL WALL REINFORCING SHALL ALIGN WITH VERTICAL FOUNDATION DOWELS. DOWELS SHALL BE PLACED AS SHOWN ON DETAILS WITH STANDARD ACI HOOK DIRECTLY ON TOP OF BOTTOM LAYER OF FOOTING REINFORCING. REFER TO CMU WALL REINFORCING SCHEDULE ON PLAN FOR SIZE AND SPACING.
2. TYPICAL VERTICAL WALL REINFORCING TO BE PLACED AS SHOWN ON DETAILS. GROUT CELLS FULL THAT CONTAIN REINFORCEMENT.
3. REFER TO CMU LINTEL SCHEDULE FOR SIZE, LOCATION AND QUANTITY OF LINTEL REINFORCEMENT.
4. VERTICAL REINFORCING BARS MAY BE SPLICED IN 6'–0" TO 8'–0" LENGTHS.
5. HORIZONTAL WALL REINFORCING SHALL BE TRUSS TYPE AT 16" O.C. ABOVE GRADE AND 8" O.C. BELOW GRADE UNLESS OTHERWISE NOTED ON PLANS AND DETAILS. DISCONTINUE AT CONTROL JOINTS.
6. CONTRACTOR SHALL USE THE LOW LIFT METHOD OF GROUTED MASONRY CONSTRUCTION UNLESS CLEAN OUTS ARE PROVIDED AT EACH VERTICAL REINFORCING BAR.
7. REFER TO PLANS AND DETAILS FOR SIZE AND LOCATION OF BOND BEAMS AND QUANTITY OF REINFORCING. LAP REINFORCING 24" MINIMUM. DISCONTINUE BOND BEAMS AT CONTROL JOINTS.
8. REFER TO LINTEL SCHEDULE NOTES FOR VERTICAL BARS ADJACENT TO OPENING.
9. PROVIDE VERTICAL WALL REINFORCING IN FIRST CELL NEXT TO CONTROL JOINTS/CORNERS/OPENINGS. TYPICAL.
10. VERTICAL CONTROL JOINTS SHALL TERMINATE AT TOP OF FOOTING.
11. PROVIDE CORNER BARS TO MATCH TYPE AND QUANITY OF HORIZONTAL WALL REINFORCING, TYPICAL.

CMU WALL REINFORCING LAYOUT

SCALE: 3/16" = 1'–0"

4–009

POWERS LINTEL SCHEDULE				
MARK	POWERS LINTEL	LINTEL DEPTH	BOTTOM REINFORCING	TOP REINFORCING
PS–1	PS8–8	8"	(1)–#5	(2)–#5
PS–2	PS8–16	16"	(1)–#5	(2)–#5

PROVIDE POWERS LINTELS AT INTERIOR WALL OPENINGS ONLY. SEE PLANS FOR LOCATIONS.

MASONRY LINTELS (ML–#) MUST BE SHORED AND GROUTED SOILD TO FORM AN INTEGRAL BEAM. SHORING IS TO REMAIN IN PLACE UNTIL GROUT HAS REACHED FULL DESIGN STRENGTH.

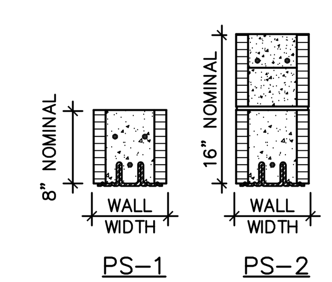

TYPICAL POWERS LINTEL DETAILS

POWERS LINTEL NOTES

1. PRODUCT NAME (PATENT NO. 5465538)

   PREFORMED POWERS STEEL LINTEL SHALL BE GALVANIZED COIL STEEL AS MANUFACTURED BY POWERS STEEL AND WIRE PRODUCTS, INC. STEEL GRADE SHALL BE ASTM A570 GRADE C (Fy = 40 ksi.)
2. SHORE LINTELS AS REQUIRED TO COMPENSATE FOR DEAD LOAD DEFLECTION ON NON–CURED MASONRY GROUT. ALL LINTELS GREATER THAN 18'–0" ARE BUILT WITH 1/2" CAMBER.
3. LINTELS TO BE USED WITH BRICK OR CONCRETE MASONRY UNITS HAVING A MINIMUM f'm AS SHOWN.
4. STEEL SURFACES IN CONTACT WITH GROUT AND/OR MORTAR SHALL BE UNPAINTED AND FREE OF MATERIAL THAT MIGHT INHIBIT BOND.
5. BEARING EACH END SHALL BE 3" PLUS OR MINUS 1/2". BEARING SHALL BE ON A MINIMUM 8" DEEP GROUTED CELL PER THE STANDARD BUILDING CODE.
6. f'm: 1500 psi. MASONRY UNITS SHALL CONFORM TO ASTM C90, GRADE N.
7. GROUT: 3,000 psi. SLUMP RANGE: 8" TO 11". ROD OR VIBRATE GROUT ADEQUATELY TO ENSURE CONSOLIDATION OF GROUT (NO AIR POCKETS). GROUT SHALL COMPLY WITH ASTM C476–83 AND BE EITHER COARSE OR FINE GROUT.
8. MORTAR: TYPE "S" OR TYPE "M" 1800 psi.
9. TOP REINFORCING OR TOP OF WALL REINFORCING, IS REQUIRED BY CODES TO PROVIDE A CONTINUOUS TIE AROUND A STRUCTURE AND TO PROVIDE FOR UPLIFT RESISTANCE AT LINTELS.
10. ATTACHMENTS TO TOP OF WALL PER ARCHITECTURAL AND/OR ENGINEERING DRAWINGS.
11. LIMITATIONS:

    THE LINTELS SHALL NOT EXCEED THE ALLOWABLE DESIGN LOADS AND SPANS SHOWN IN THIS REPORT.

    THE LINTELS SHALL NOT BE USED IN A FIRE RESISTANCE RATED ASSEMBLY UNLESS A TEST REPORT DOCUMENTING FIRE RESISTANCE IS SUBMITTED TO THE BUILDING OFFICIAL.

    A PROPER BARRIER IS REQUIRED WHEN USING CORROSIVE LUMBER PRODUCTS IN CONTACT WITH THE STEEL LINTELS. A PROPER BARRIER WOULD BE A POLYETHYLENE BARRIER WITH A 10 MIL. THICKNESS OR TO MAINTAIN A MIN. 1/4" SPACING BETWEEN THE CORROSIVE LUMBER AND STEEL LINTEL.

    NOT FOR USE IN THE HVHZ IN MIAMI OR BROWARD COUNTIES AT THIS TIME. MIAMI DADE COMPLIANCE IS BEING SOUGHT.
12. DEFLECTION LIMITS ARE SET TO L/600 FOR ALL LOADS SHOWN ABOVE THE DARKENED SOLID LINE. DEFLECTION LIMITS ARE SET TO L/360 [LIVE LOAD] AND L/240 [DEAD + LIVE LOAD] FOR ALL LOADS SHOWN BELOW DARKENED SOLID LINE, EXCEPT 8" COMPOSITE LINTELS WHICH ARE SET TO L/240 [LIVE LOAD] AND L/180 [DEAD + LIVE LOAD].
13. ALL LOADS SHOWN IN TABLES ARE SUPERIMPOSED LOADS. TABLES ARE DATED 11/2008 AND CLEARLY INDICATE SUPERIMPOSED LOADS.
14. A #5 REINFORCING BAR(S) GRADE 40 IS SET TO APPROX. 1–1/2" FROM TOP OF ALL LINTEL DESIGNS AND IN SOME CASES ON THE BOTTOM OF THE LINTEL AS SHOWN ON LOAD TABLES TOP HORIZONTAL REINFORCEMENT IS TO BE A CONTINUOUS TIE AS NOTED IN NOTE #9. IN THE CASE THAT THE LINTEL IS NOT WITHIN A COMPOSITE BOND BEAM SYSTEM. TOP HORIZONTAL REINFORCEMENT IS TO EXTEND 2'–0" PAST INSIDE OF JAMBS.
15. MANUFACTURER:

    POWERS STEEL

    2415 WEST GRIFFIN ROAD
    LEESBURG, FL. 54748
    PHONE No. (352) 435–4641
    FAX No. (352) 435–4644
16. TECHNICAL DATA AND ENGINEERING POWERS LINTELS HAVE BEEN DESIGNED IN ACCORDANCE WITH THE FOLLOWING:
    * FLORIDA BUILDING CODE – 2007
    * NASPEC/AISI LIGHT GAGE COLD FORMED STEEL DESIGN – 2001 (W/2004 SUPPLEMENT)
    * ACI 530–05/ASCE 5–05/TMS 402–05
17. TECHNICAL ASSISTANCE IS AVAILABLE FROM THE MANUFACTURER ON SPECIAL DESIGN CONCERNS OR LINTEL DEPTHS DIFFERENT THAN THOSE SHOWN IN THE LOAD TABLES.

    STRUCTURAL ENGINEER FOR THESE LINTELS IS:

    S.E. CONSULTANTS, INC.

    5800 E. THOMAS RD. SUITE 104
    SCOTTSDALE, AZ 85251
    PHONE No. (480) 946–2010
    FAX No. (480) 946–1909

    IF AN INSPECTOR, CONTRACTOR, SUBCONTRACTOR, OR PLANS EXAMINER HAS ANY TECHNICAL QUESTIONS PLEASE CALL.

    INSTALLATION:
    POWERS LINTELS ARE TO BE INSTALLED IN ACCORDANCE WITH STANDARD CONSTRUCTION PRACTICES, SET TO PROPER LINE AND LEVEL, PLUMB AND TRUE AND IN CORRECTION TO RELATION TO OTHER WORK.

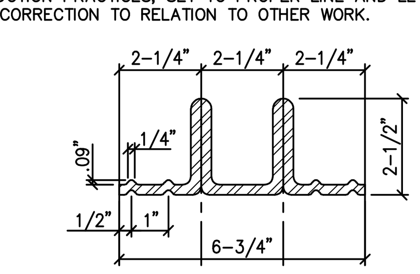

PS8(L–2) STEEL LINTELS

NOTE: NO SCALE

4–033

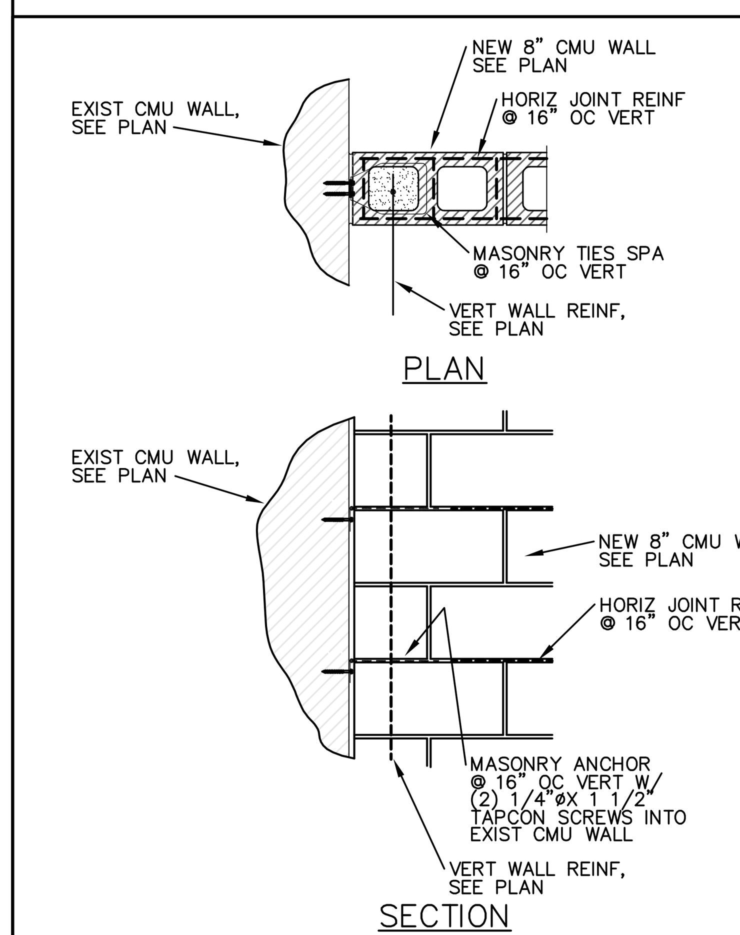

NEW CMU/EXIST CMU TIE DETAIL

4–200

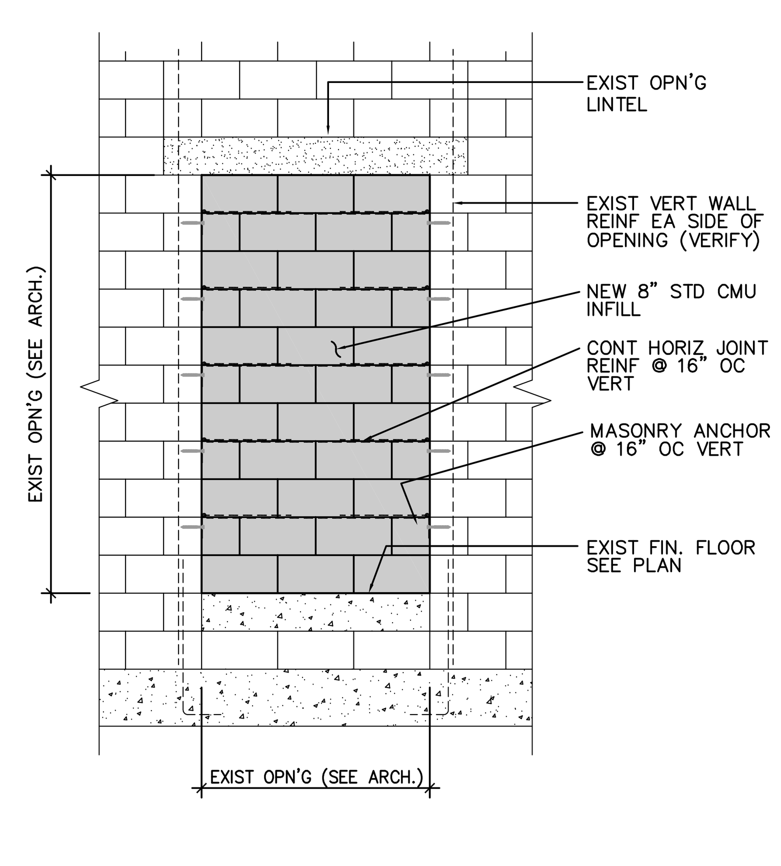

TYPICAL CMU INFILL @ EXIST WALL OPN'G

4–101

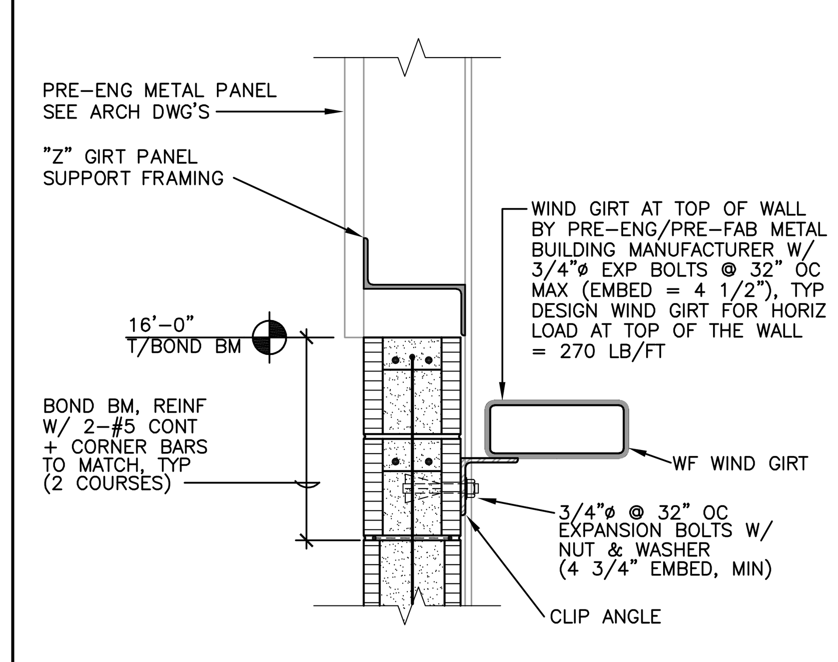

WIND GIRT/CMU WALL CONNECTION DETAIL

SCALE: 1" = 1'–0"

4–100

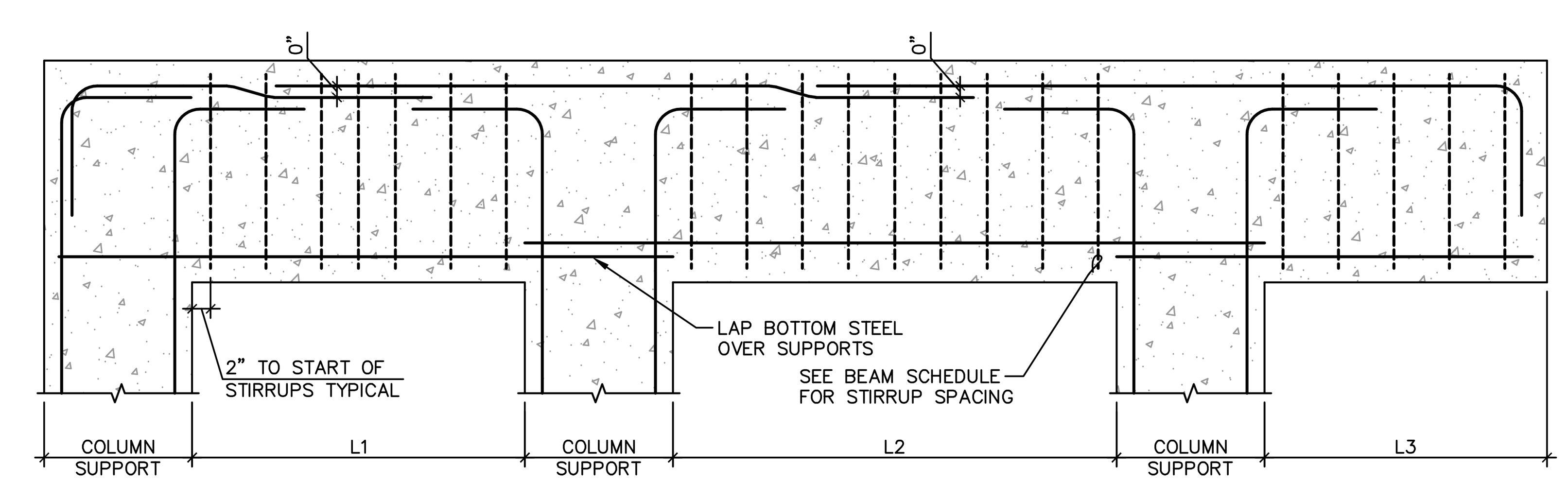

NOTE:

1. WHERE TOP & BOTTOM BARS ARE IN MULTIPLE LAYERS, PROVIDE 1" CLEAR BETWEEN LAYERS TYPICAL.
2. SEE TENSION AND COMPRESSION LAP SPLICE TABLES FOR PROPER LAP AND CONCRETE STRENGTH.
3. ALL BOTTOM LAYERS OF STEEL MUST BE LAPPED OVER CENTERLINE OF SUPPORT.
4. ALL TOP AND INTERMEDIATE LAYERS OF STEEL MUST BE LAPPED AT MID–SPAN OF BEAM.
5. SEE CONCRETE BEAM SCHEDULE FOR ALL BEAM REINFORCING AND SEE FRAMING PLANS FOR BEAM DESIGNATION AND PLACEMENT.

TYPICAL CONCRETE BEAM BAR PLACEMENT DIAGRAM

SCALE: N.T.S.

3–062

TO THE BEST OF OUR KNOWLEDGE, INFORMATION AND BELIEF, THESE STRUCTURAL PLANS CONFORM TO AND SATISFY THE REQUIREMENTS OF THE FLORIDA BUILDING CODE, 2017 (6TH EDITION), ACI 318–14, AND LOCAL CODES AS APPLICABLE

MASTER CONSULTING ENGINEERS, INC.
STRUCTURAL CONSULTANTS
5523 WEST CYPRESS ST., #200
TAMPA, FLORIDA 33607
813.287.3600 FAX 813.287.3622
www.mcengineers.com

THIS DRAWING AND ALL INFORMATION CONTAINED HEREIN IS THE SOLE PROPERTY OF MASTER CONSULTING ENGINEERS, INC. AND MAY NOT BE REPRODUCED, COPIED, ALTERED OR USED IN ANY WAY WITHOUT THE EXPRESS WRITTEN AUTHORIZATION FROM MASTER CONSULTING ENGINEERS, INC.

CA: 8426 PROJ NO. 2300–179

© COPYRIGHT 2018

FleischmanGarcia
ARCHITECTURE • PLANNING • INTERIOR DESIGN
SAFETY HARBOR OFFICE
195 FOURTH AVENUE NORTH
SAFETY HARBOR, FLORIDA 34695
PHONE (727) 725-8880
FAX (727) 725-3900
TAMPA OFFICE
324 HYDE PARK AVENUE, SUITE 300
TAMPA, FLORIDA 33606
PHONE (813) 251-4400
FAX (813) 251-1994
REGISTRATION NUMBER AA C000123
SARASOTA OFFICE
5967 CATTLEMEN LANE, SUITE 6
SARASOTA, FLORIDA 34232
PHONE (941) 342-9293
FAX (941) 342-9253

NEW TAMPA RECREATION CENTER ADDITION

TAMPA, FL 33647

THIS DESIGN AND DRAWING IS THE SOLE PROPERTY OF FLEISCHMANGARCIA. NO PART OF THIS WORK MAY BE REPRODUCED WITHOUT PRIOR WRITTEN PERMISSION FROM FLEISCHMANGARCIA.

I CERTIFY TO THE BEST OF MY KNOWLEDGE THAT THESE DRAWINGS COMPLY W/ ALL RELEVANT BUILDING CODES

FGA PROJECT NUMBER
18015

ISSUE DATE
11/07/18

TYPICAL DETAILS

SHEET NUMBER
S3.2

T:\2000 Projects\2300 FleischGarcia\2300-179 New Tampa Rec Center Addition 2018\Drafting\Sdwg\S3.1 and S3.4.dwg, 11/9/2018 10:05:51 AM, John
11-07-18 John Weber T:\2000 Projects\2300 FleischGarcia\2300-179 New Tampa Rec Center Addition 2018\Drafting\Sdwg\S3.1 and S3.4.dwg

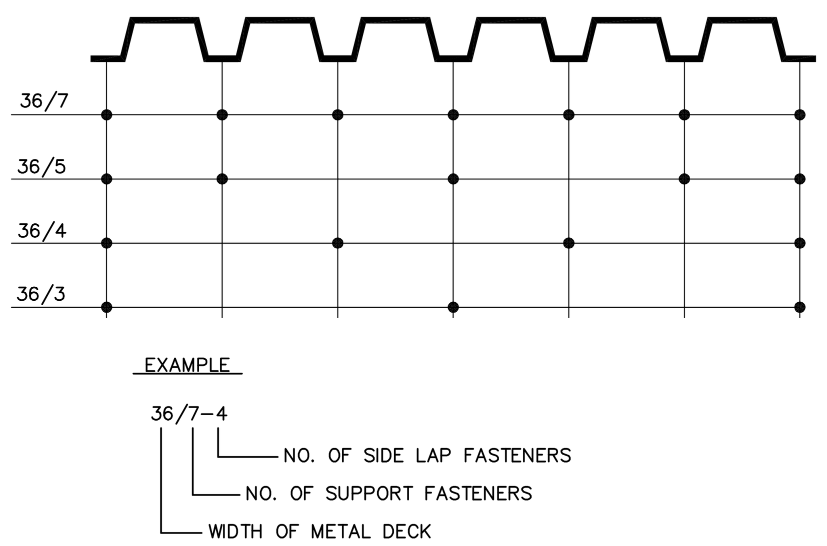

NOTES:

1. USE 5/8"ø PUDDLE WELD AT SUPPORTS AND #12 SCREWS AT SIDE LAPS.
2. USE 36/7–4 UNLESS NOTED OTHERWISE IN PLANS.
3. USE ⅝"ø PUDDLE WELDS @ 6"O.C. ALONG DECK CLOSURE ANGLE AND EMBED PLATE PARALLEL TO FRAMING UNLESS NOTED OTHERWISE IN PLANS.

TYP. FASTENER LAYOUT

NO SCALE

5–305

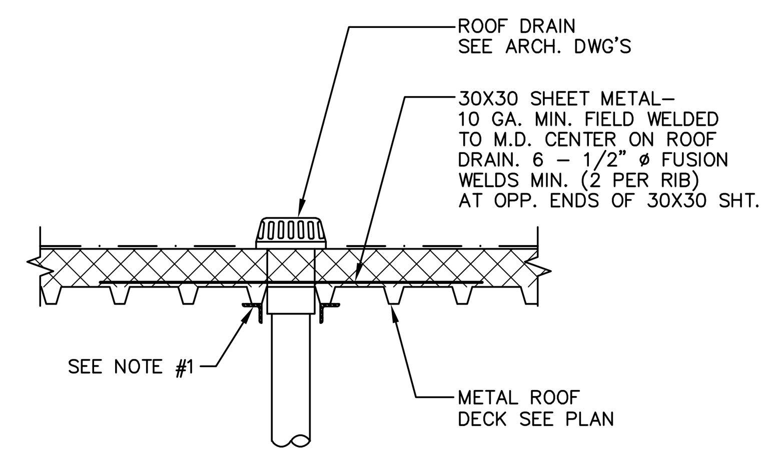

NOTE:

1. SEE DETAIL 5–302 FOR STEEL REINFORCING AROUND ROOF DRAIN OPENING.

TYP. DECK REINF. @ ROOF DRAIN W/O SUMP PAN

NO SCALE

5–301

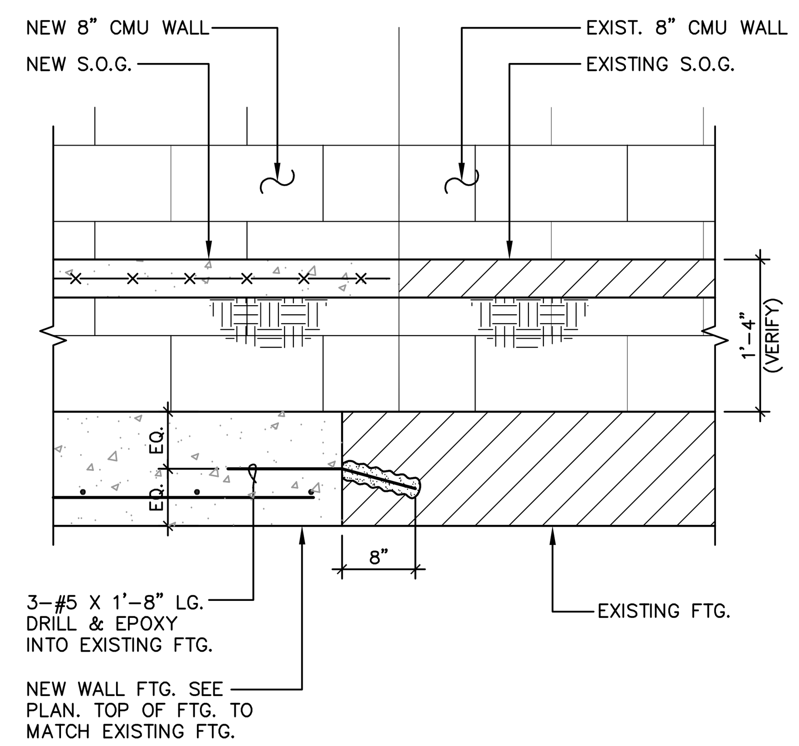

NEW WALL FOOTING EXISTING SLAB ELEVATION

SCALE: N.T.S.

3–009

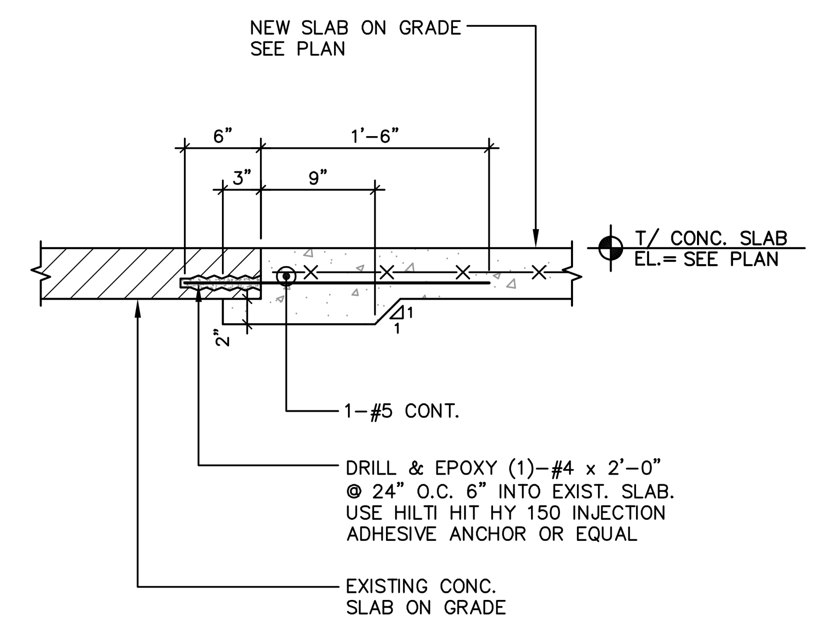

NEW SLAB TO EXISTING SLAB SECTION

SCALE: N.T.S.

3–011

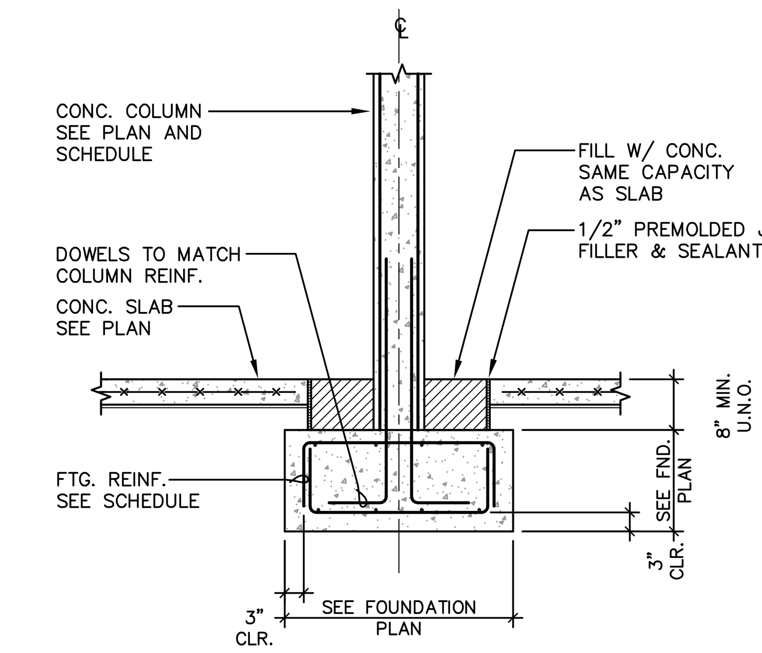

TYPICAL CONCRETE COLUMN FOOTING WITHOUT PIER

SCALE: N.T.S.

3–017

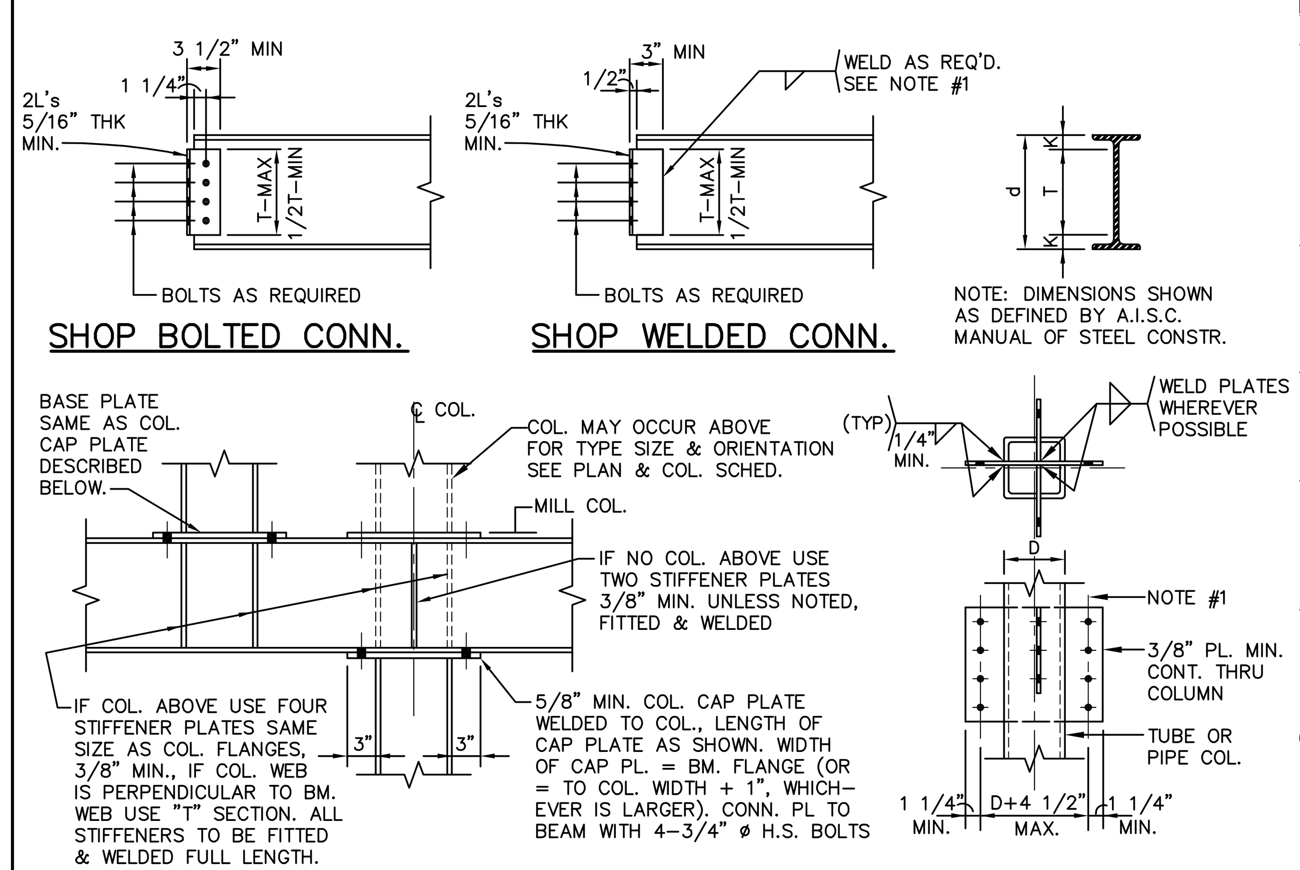

BEAM OVER COLUMN AND COLUMN OVER BEAM

FRAMED CONNECTION AT TUBE/PIPE COLUMN

NOTES:

1. ALL CONNECTIONS SHALL BE DESIGNED FOR MAX. UNIFORM LOAD CARRYING CAPACITY UNLESS GREATER REACTION IS SHOWN ON PLAN. IN ANY CASE, CONNECTIONS. SHALL NOT BE LESS THAN STD. A.I.S.C. CONNECTION FOR THE PARTICULAR BEAM. DEPTH.
2. DETAILER SHALL SUBMIT FOR APPROVAL, STANDARD CONNECTION DETAILS CONFORMING TO ABOVE DETAILS W/ERECTION DRAWING. SUBMISSION.
3. MILL COLUMNS. TO BEAR OR PROVIDE FULL PENETRATION WELD AT BASE PL'S & CAP PL'S AT COLUMNS CARRYING BEAMS.
4. AT CONNECTION OF HUNG BEAM. TO CANTILEVERED BEAMS. PROVIDE STANDARD 2 L CONNECTION AS PER NOTE 1 FOR LOAD CAPACITY OF HUNG BEAM.
5. WHERE BEAMS FRAME TO FITTED STIFFENERS AT COLUMNS PROVIDE SHEAR PLATE CONNECTION W/ STRENGTH CAPACITY AS PER NOTE 1.
6. ALL BOLTS TO BE MIN. 3/4"ø. A–325 H.S. BOLTS FRICTION–TYPE UNLESS NOTED OTHERWISE. ALL WELDING ELECTRODES TO BE E70 XX.

5–001

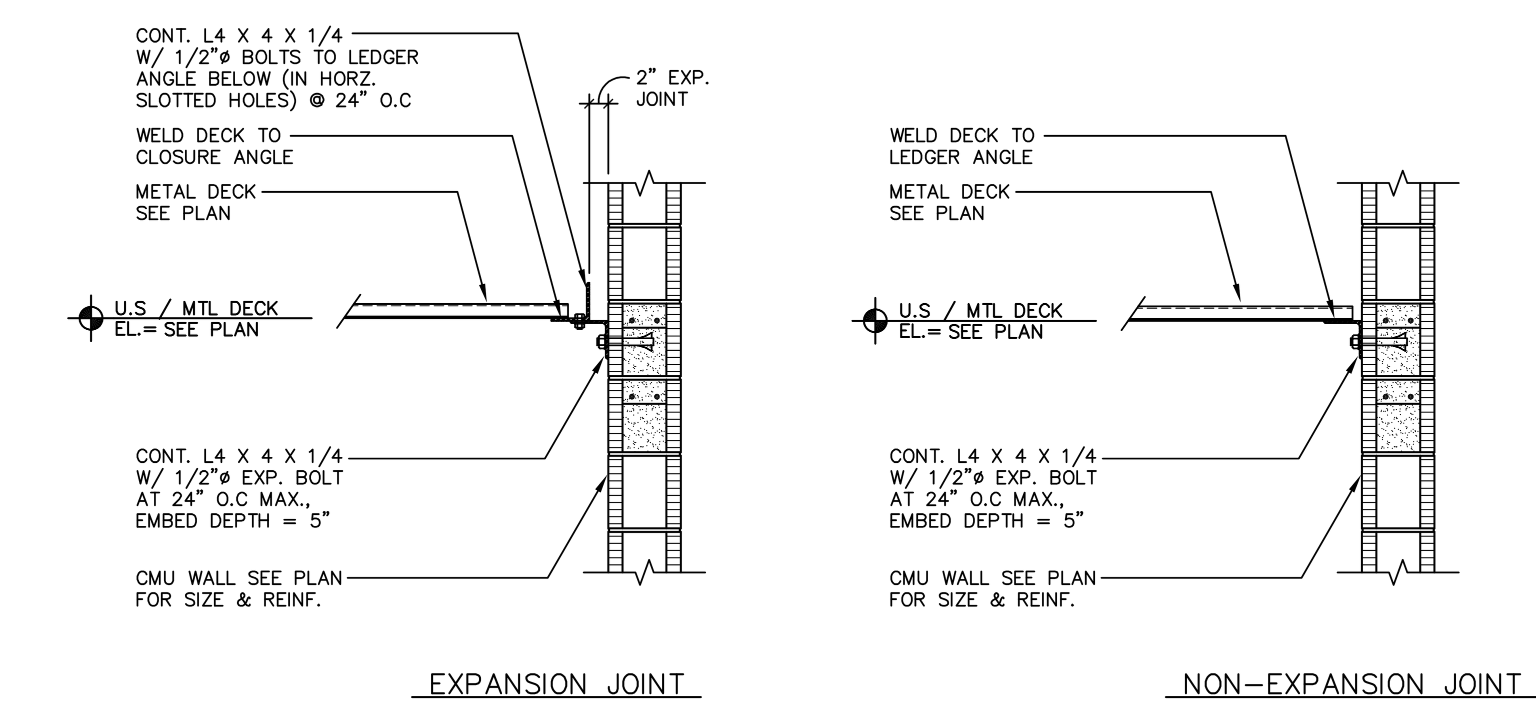

TYPICAL METAL DECK TO MASONRY WALL CONNECTION

SCALE: 3/4" = 1'–0"

5–310

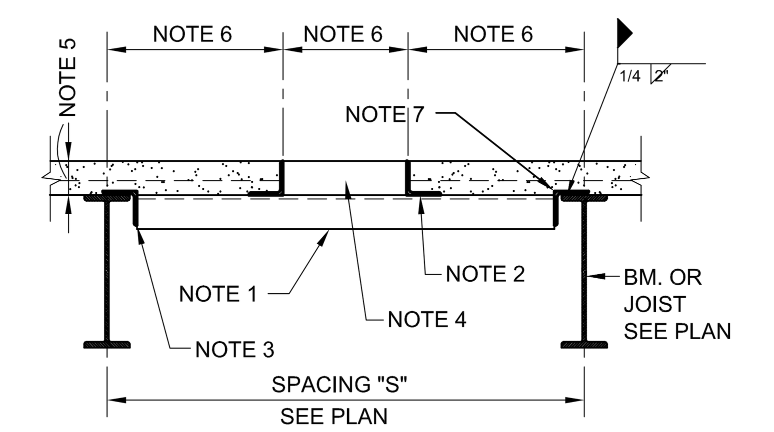

NOTES:

1. FOR "S" LESS THAN 4'-0" USE L3X3X1/4
 FOR "S" LESS THAN 6'-0" USE L4X4X1/4
 FOR "S" GREATER THAN 6'-0" USE L OR W-BM.
 VERT. LEG OF L OR DEPTH OF W-BM.
 > SPAN (IN.) - 24. MIN. THICKNESS = 1/4"
2. VERT. LEG OF L SAME AS SLAB THICKNESS
 MIN. L THICKNESS = 3/16" FOR SPANS < 4'-0"
 1/4" FOR SPANS > 4'-0"
3. SEAT SAME SIZE AS ANGLE (NOTE 1)
4. 1/8" PLATE TO TOP OF SLAB.
5. SLAB THICKNESS - SEE PLAN.
6. FOR OPENING SIZE AND LOCATIONS SEE ARCH. AND MECHANICAL DRAWINGS.
7. SHOP WELD

TYPICAL FRAMED FLOOR OPENING DETAIL

5-040

NOTE:

IN CASE OF CONFLICT BETWEEN INFORMATION SHOWN ON THIS DRAWING, SECTION DRAWINGS OR ARCHITECTURAL DRAWINGS, IT IS THE CONTRACTOR'S RESPONSIBILITY TO INFORM THE ARCHITECT AND ENGINEER OF SUCH CONFLICT IN ORDER TO RECEIVE A CLARIFICATION BEFORE PROCEEDING TO WORK. DIMENSIONS, SIZES AND REINFORCEMENT OF STRUCTURAL ELEMENTS SHOWN IN THIS DRAWING ARE MINIMUM TO BE USED UNLESS NOTED OTHERWISE (U.N.O.) IN PLANS.

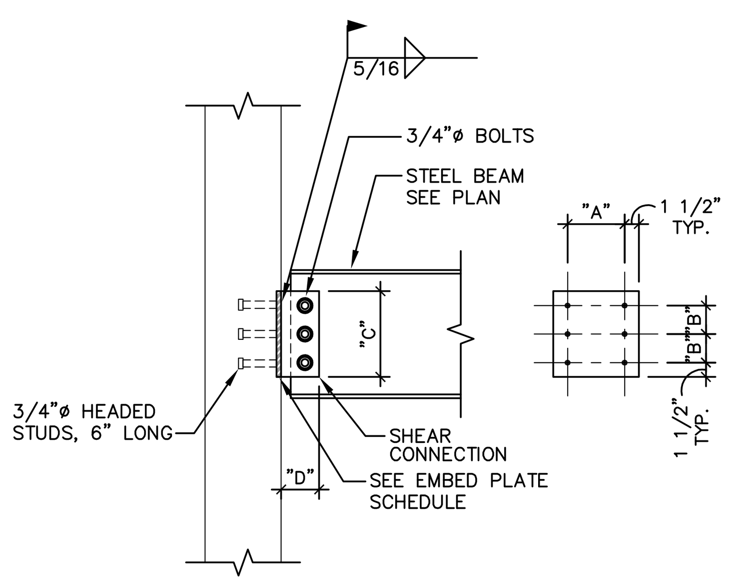

EMBED PLATE SCHEDULE				
BEAM SIZE	PLATE SIZE	NO. OF 3/4"ø HEADED STUDS	"A" (IN.)	"B" (IN.)
C8	1/2" X 9" X 9"	4	6"	4"
W10	1/2" X 9" X 9"	4	6"	4"
W12	1/2" X 9" X 12"	6	6"	4 1/2"
W16	1/2" X 9" X 16 1/2"	8	6"	4 1/2"

STEEL BEAM TO CONCRETE CONNECTION

SCALE: 1/2" = 1'–0"

5–005

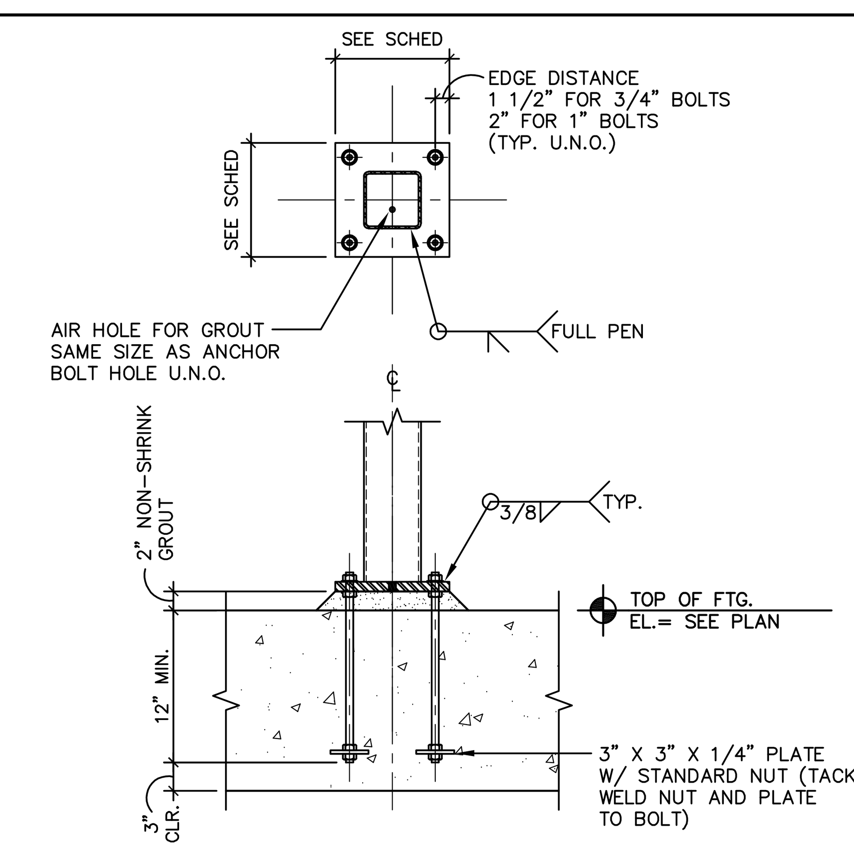

BASE PLATE – BP1

SCHEDULE OF BASE PLATES		
MARK	SIZE	BOLT QTY/SIZE
BP1	10" X 10" X 1/2"	1/2"ø F1554 GRADE 36 (12" EMBED MIN)

NOTES:

1. SEE BASE PLATE SCHEDULE FOR BOLTS SIZE AND QUANTITIES.
2. INCREASE LENGTH OF ANCHOR BOLTS BY PIER LENGTH WHEN REQUIRED. EXTEND ANCHOR BOLTS AS REQUIRED TO PROVIDE 3" CLEAR FROM BOTTOM OF FOUNDATION.
3. USE F1554 (36 KSI) ANCHOR BOLTS AS NEEDED FOR REACTIONS INDICATED IN DRAWINGS.
4. FOR ANCHOR BOLTS DETAILS, SEE TYPICAL DETAIL 5–101 ON THIS DRAWING.

STEEL COLUMN BASE PLATE DIAGRAMS

SCALE: 3/4" = 1'–0"

5–100

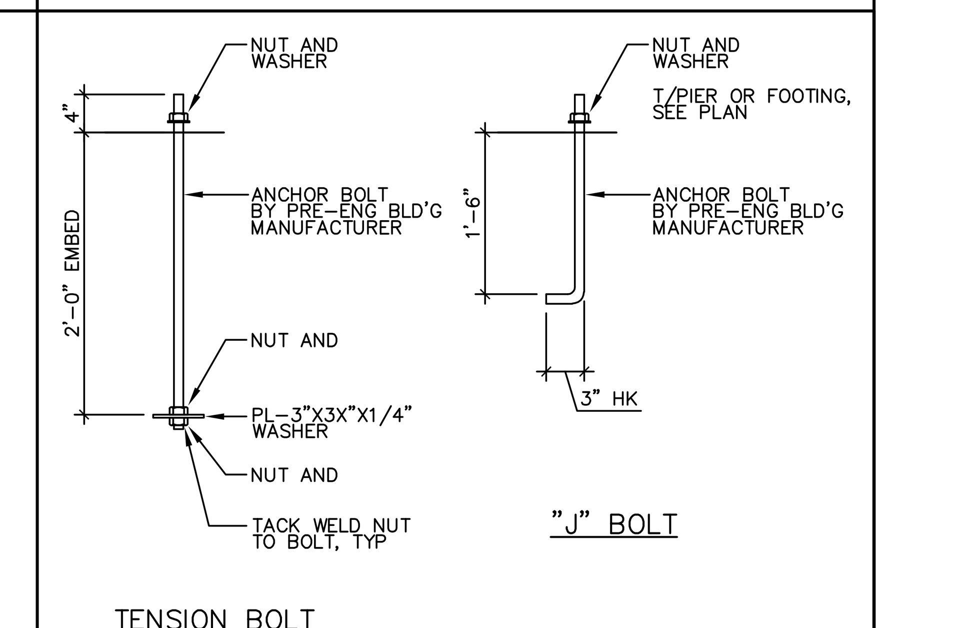

ANCHOR BOLT TYPES

SCALE: 1" = 1'–0"

5–101

TO THE BEST OF OUR KNOWLEDGE, INFORMATION AND BELIEF, THESE STRUCTURAL PLANS CONFORM TO AND SATISFY THE REQUIREMENTS OF THE FLORIDA BUILDING CODE, 2017 (6TH EDITION), ACI 318–14, AND LOCAL CODES AS APPLICABLE

MASTER CONSULTING ENGINEERS, INC.
STRUCTURAL CONSULTANTS
5523 WEST CYPRESS ST., #200
TAMPA, FLORIDA 33607
813.287.3600 FAX 813.287.3622
www.mcengineers.com

THIS DRAWING AND ALL INFORMATION CONTAINED HEREIN IS THE SOLE PROPERTY OF MASTER CONSULTING ENGINEERS, INC. AND MAY NOT BE REPRODUCED, COPIED, ALTERED OR USED IN ANY WAY WITHOUT THE EXPRESS WRITTEN AUTHORIZATION FROM MASTER CONSULTING ENGINEERS, INC.

CA: 8426 PROJ NO. 2300–179
© COPYRIGHT 2018

FleischmanGarcia
ARCHITECTURE • PLANNING • INTERIOR DESIGN
SAFETY HARBOR OFFICE
195 FOURTH AVENUE NORTH
SAFETY HARBOR, FLORIDA 34695
PHONE (727) 725-8880
FAX (727) 725-3900
TAMPA OFFICE
324 HYDE PARK AVENUE, SUITE 300
TAMPA, FLORIDA 33606
PHONE (813) 251-4400
FAX (813) 251-1994
SARASOTA OFFICE
5967 CATTLEMEN LANE, SUITE 6
SARASOTA, FLORIDA 34232
PHONE (941) 342-9293
FAX (941) 342-9253
REGISTRATION NUMBER AA C000123

NEW TAMPA RECREATION CENTER ADDITION

TAMPA, FL 33647

THIS DESIGN AND DRAWING IS THE SOLE PROPERTY OF FLEISCHMANGARCIA. NO PART OF THIS WORK MAY BE REPRODUCED WITHOUT PRIOR WRITTEN PERMISSION FROM FLEISCHMANGARCIA.

I CERTIFY TO THE BEST OF MY KNOWLEDGE THAT THESE DRAWINGS COMPLY W/ ALL RELEVANT BUILDING CODES

FGA PROJECT NUMBER
18015

ISSUE DATE
11/07/18

TYPICAL DETAILS

SHEET NUMBER
S3.3

T:\2000 Projects\2300 FleischGarcia\2300-179 New Tampa Rec Center Addition 2018\Drafting\Sdwg\S3.1 and S3.4.dwg, 11/9/2018 10:03:50 AM, John
John Weber T:\2000 Projects\2300 FleischGarcia\2300-179 New Tampa Rec Center Addition 2018\Drafting\Sdwg\S3.1 and S3.4.dwg
11-07-18

CMU LINTEL SCHEDULE					
WALL THICKNESS	LINTEL DEPTH	BOTTOM REINFORCING	TOP REINFORCING	STIRRUPS & SPACING	NOTES
PCL-1	8"	2-#5	–	–	
PCL-2	16"	2-#5	2-#5	#3@8" OC	
PCL-3	24"	2-#5	2-#5	#3@8" OC	

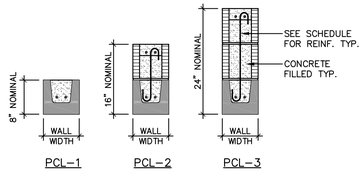

NOTES:

1. PRECAST CONCRETE LINTELS CAN BE INSTALLED AT ALL OPENINGS PER SCHEDULE. CAST IN PLACE CONCRETE LINTELS SHALL BE PLACED WHERE SHOWN ON PLANS. SUBSTITUTED UPON APPROVAL BY ENGINEER.
2. GROUTED LINTEL (THROUGH) BLOCKS SHALL EXTEND A MINIMUM OF 8" BEYOND FACE OF OPENING EACH SIDE UNLESS NOTED OTHERWISE. THE FIRST TWO VERTICAL CELLS EACH OF THE OPENING SHALL BE GROUTED AND CONTAIN 2-#5 VERTICAL EACH FACE.

   NOTE: THE FIRST CELL EACH SIDE OF THE OPENING SHALL BE GROUTED TO LINTEL LEVEL. SECOND CELL SHALL BE GROUTED TO ROOF LEVEL.
3. SEE SPECIFIC DETAIL FOR BRICK LEDGE SUPPORT ANGLE OF LOOSE LINTEL SCHEDULE.
4. CONSTRUCTION/CONTROL JOINT SHALL NOT BE LOCATED WITHIN WIDTH OF OPENING, NOR SHALL IT BE LOCATED WITHIN 24" OF THE OPENING ON EITHER SIDE.
5. CONCRETE LINTEL BEARING EACH SIDE OF LINTEL TO BE EQUAL TO DEPTH OF LINTEL, TYPICAL UNLESS NOTED OTHERWISE.

TYPICAL PRECAST/C.I.P. LINTEL DETAIL

SCALE: 3/4" = 1'-0"

4-033

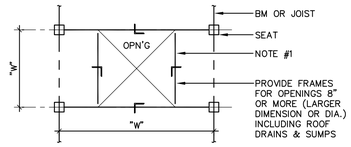

FRAME DETAIL

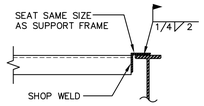

SEAT DETAIL

NOTES:

1. ANGLES ALL SIDES UNLESS BEAMS SHOWN ON PLAN:
   L2X2X1/4 FOR "W" < 2'-0"
   L3X3X1/4 FOR "W" < 4'-0"
   L4X4X1/4 FOR "W" < 6'-0"
2. FOR "W" > 6'-0" USE L OR "W" BEAM. L SIZE OR DEPTH OF W BEAM. EQUAL TO SPAN DIMENSION IN INCHES. MINIMUM THICKNESS = 1/4".
3. FOR W > 10'-0" CONTACT ENGINEER OF RECORD FOR DETAIL.

TYP. ROOF OPN'G DETAIL

NO SCALE

5-302

NOTE:

IN CASE OF CONFLICT BETWEEN INFORMATION SHOWN ON THIS DRAWING, SECTION DRAWINGS OR ARCHITECTURAL DRAWINGS, IT IS THE CONTRACTOR'S RESPONSIBILITY TO INFORM THE ARCHITECT AND ENGINEER OF SUCH CONFLICT IN ORDER TO RECEIVE A CLARIFICATION BEFORE PROCEEDING TO WORK. DIMENSIONS, SIZES AND REINFORCEMENT OF STRUCTURAL ELEMENTS SHOWN IN THIS DRAWING ARE MINIMUM TO BE USED UNLESS NOTED OTHERWISE (U.N.O.) IN PLANS.

TO THE BEST OF OUR KNOWLEDGE, INFORMATION AND BELIEF, THESE STRUCTURAL PLANS CONFORM TO AND SATISFY THE REQUIREMENTS OF THE FLORIDA BUILDING CODE, 2017 (6TH EDITION), ACI 318-14, AND LOCAL CODES AS APPLICABLE

MASTER CONSULTING ENGINEERS, INC.
STRUCTURAL CONSULTANTS
5023 WEST CYPRESS ST., #200
TAMPA, FLORIDA 33607
813.287.9600 FAX 813.287.3622
www.mceengineers.com

THIS DRAWING AND ALL INFORMATION CONTAINED HEREIN IS THE SOLE PROPERTY OF MASTER CONSULTING ENGINEERS, INC. AND MAY NOT BE REPRODUCED OR DISTRIBUTED WITHOUT THE EXPRESS WRITTEN AUTHORIZATION OF MASTER CONSULTING ENGINEERS, INC.

CN: 8426 PROJ NO. 2300-179
© COPYRIGHT 2018

FleischmanGarcia
ARCHITECTURE · PLANNING · INTERIOR DESIGN
SARASOTA OFFICE
195 FOURTH AVENUE NORTH
SARASOTA, FLORIDA 34236
PHONE (727) 724-5080
FAX (727) 724-5088

TAMPA OFFICE
324 HYDE PARK AVENUE, SUITE 300
TAMPA, FLORIDA 33606
PHONE (813) 251-4400
FAX (813) 251-4488

ALTAMONTE SPRINGS OFFICE
5967 CASTLEMAIN LANE, SUITE 6
ALTAMONTE SPRINGS, FLORIDA 32714
PHONE (941) 342-0253
FAX (941) 342-0253

REGISTRATION NUMBER AA C000123

NEW TAMPA RECREATION CENTER ADDITION

TAMPA, FL 33647

THIS DESIGN AND DRAWING IS THE SOLE PROPERTY OF FLEISCHMAN/GARCIA, INC. ANY REPRODUCTION IN WHOLE OR IN PART IS PROHIBITED WITHOUT WRITTEN PERMISSION FROM FLEISCHMAN/GARCIA

I CERTIFY TO THE BEST OF MY KNOWLEDGE THAT THESE DRAWINGS COMPLY W/ ALL RELEVANT BUILDING CODES

FGA PROJECT NUMBER
18015

ISSUE DATE
11/07/18

TYPICAL DETAILS

SHEET NUMBER
S3.4

11-07-18 John Weber T:\2000 Projects\2300 Fleisch\Garcia\2300-179 New Tampa Rec Center Addition 2018\Drafting\Dwg\S3.1 and S3.4.dwg, 11/6/2018 10:02:24 AM, John
T:\2000 Projects\2300 Fleisch\Garcia\2300-179 New Tampa Rec Center Addition 2018\Drafting\Dwg\S3.1 and S3.4.dwg

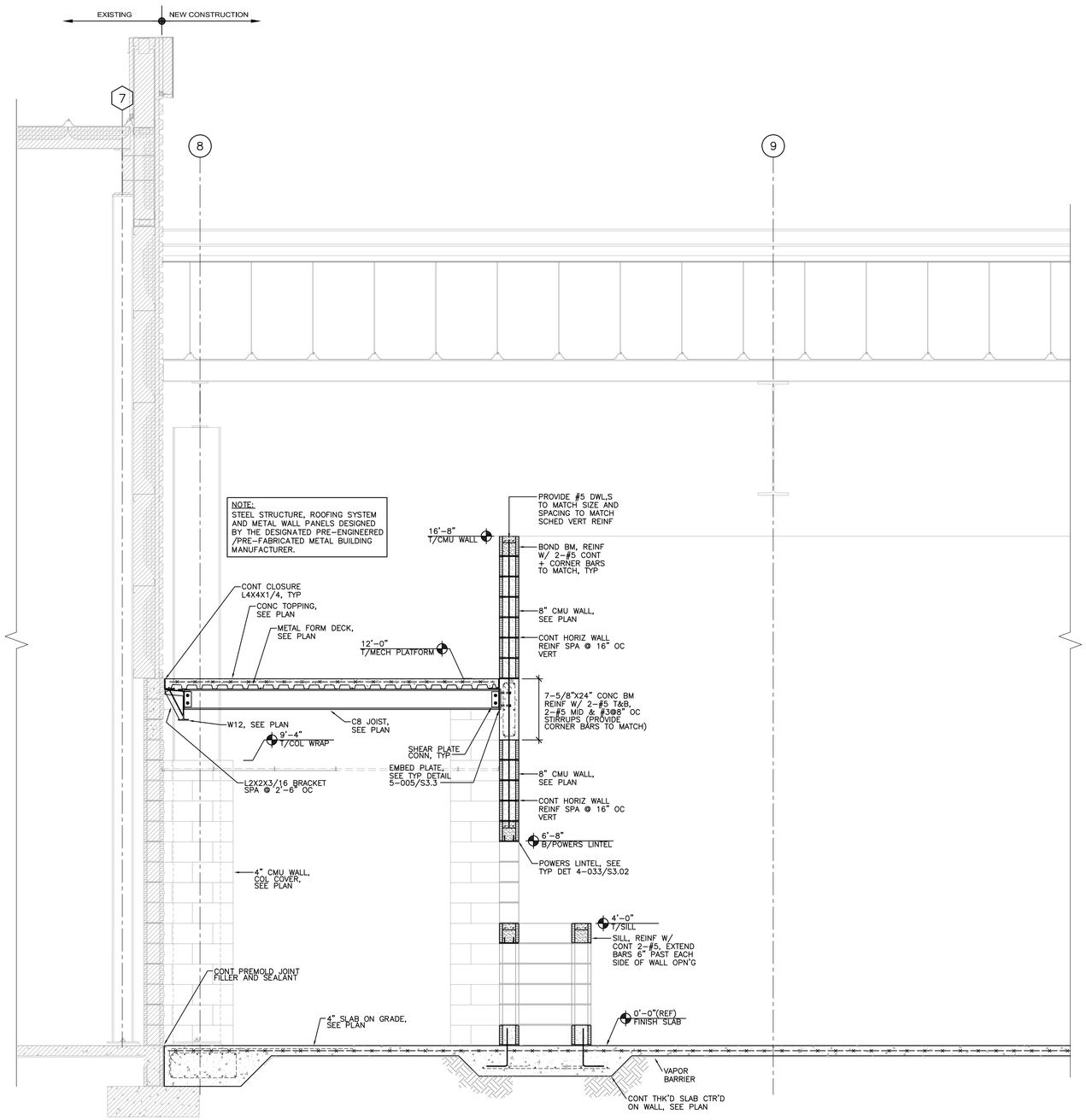

W1 S4.1 **WALL SECTION**

SCALE: 1/2" = 1'-0"

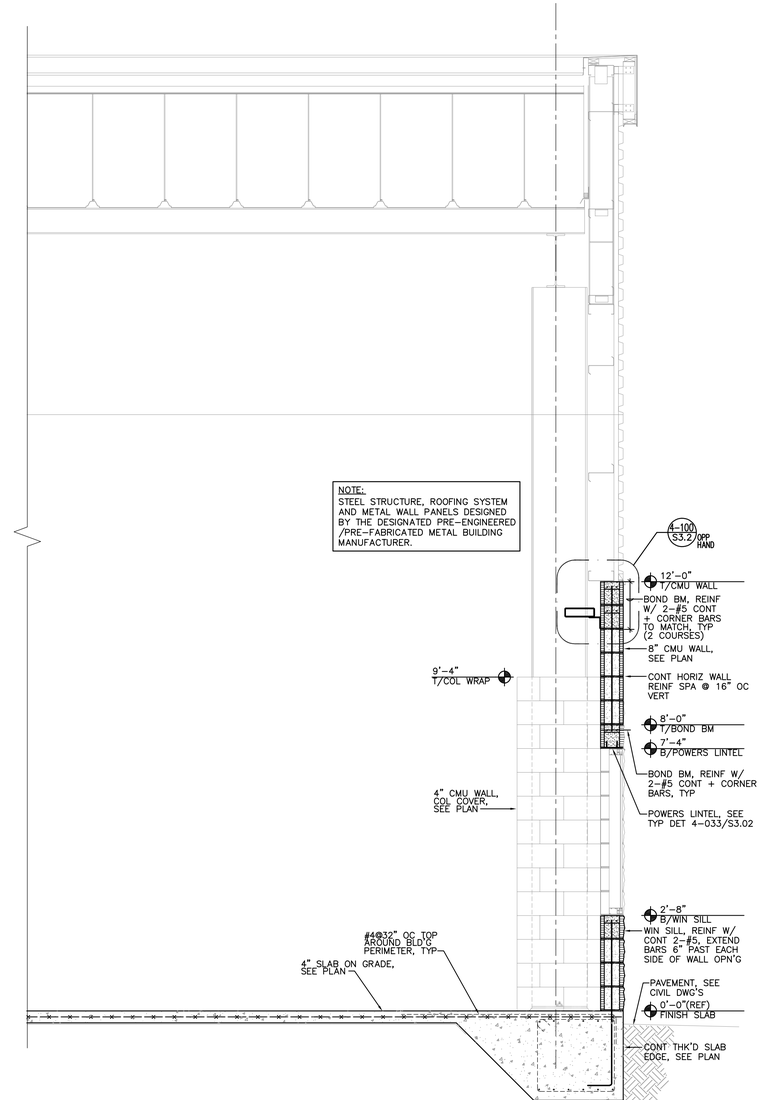

W2 S4.1 **WALL SECTION**

SCALE: 1/2" = 1'-0"

TO THE BEST OF OUR KNOWLEDGE, INFORMATION AND BELIEF, THESE STRUCTURAL PLANS CONFORM TO AND SATISFY THE REQUIREMENTS OF THE FLORIDA BUILDING CODE, 2017 (6TH EDITION), ACI 318-14, AND LOCAL CODES AS APPLICABLE

MASTER CONSULTING ENGINEERS, INC.
STRUCTURAL CONSULTANTS
5023 WEST CYPRESS ST., #200
TAMPA, FLORIDA 33607
813.287.9600 FAX 813.287.3622
www.mceengineers.com

THIS DRAWING AND ALL INFORMATION CONTAINED HEREIN IS THE SOLE PROPERTY OF MASTER CONSULTING ENGINEERS, INC. AND MUST NOT BE REPRODUCED IN WHOLE OR IN PART WITHOUT THE EXPRESS WRITTEN AUTHORIZATION FROM MASTER CONSULTING ENGINEERS, INC.

CN: 8426 PROJ NO. 2300-179

© COPYRIGHT 2018

FleischmanGarcia
ARCHITECTURE · PLANNING · INTERIOR DESIGN
SAFETY HARBOR OFFICE
195 FOURTH AVENUE NORTH
SAFETY HARBOR, FLORIDA 34695
PHONE (727) 726-6500
FAX (727) 726-0666
324 HYDE PARK AVENUE, SUITE 500
TAMPA, FLORIDA 33606
PHONE (813) 251-4400
FAX (813) 251-4401
5967 CATTLEMEN LANE, SUITE 6
SARASOTA, FLORIDA 34232
PHONE (941) 342-6293
FAX (941) 342-6293
REGISTRATION NUMBER AA C000123

NEW TAMPA RECREATION CENTER ADDITION

TAMPA, FL 33647

THE DESIGN AND DRAWING IS THE SOLE PROPERTY OF FLEISCHMAN/GARCIA, INC. AND MUST NOT BE REPRODUCED WITHOUT THE WRITTEN PERMISSION FROM FLEISCHMAN/GARCIA

I CERTIFY TO THE BEST OF MY KNOWLEDGE THAT THESE DRAWINGS COMPLY WITH ALL RELEVANT BUILDING CODES

FGA PROJECT NUMBER
18015

ISSUE DATE
11/07/18

WALL SECTIONS

SHEET NUMBER
S4.1

T:\2000 Projects\2300 Fleisch\Garcia\2300-179 New Tampa Rec Center Addition 2018\Drafting\Dwg\S4.1 thru S4.5.dwg John Weber T:\2000 Projects\2300 Fleisch\Garcia\2300-179 New Tampa Rec Center Addition 2018\Drafting\Dwg\S4.1 thru S4.5.dwg 11/9/2018 10:01:38 AM, John
11-09-18

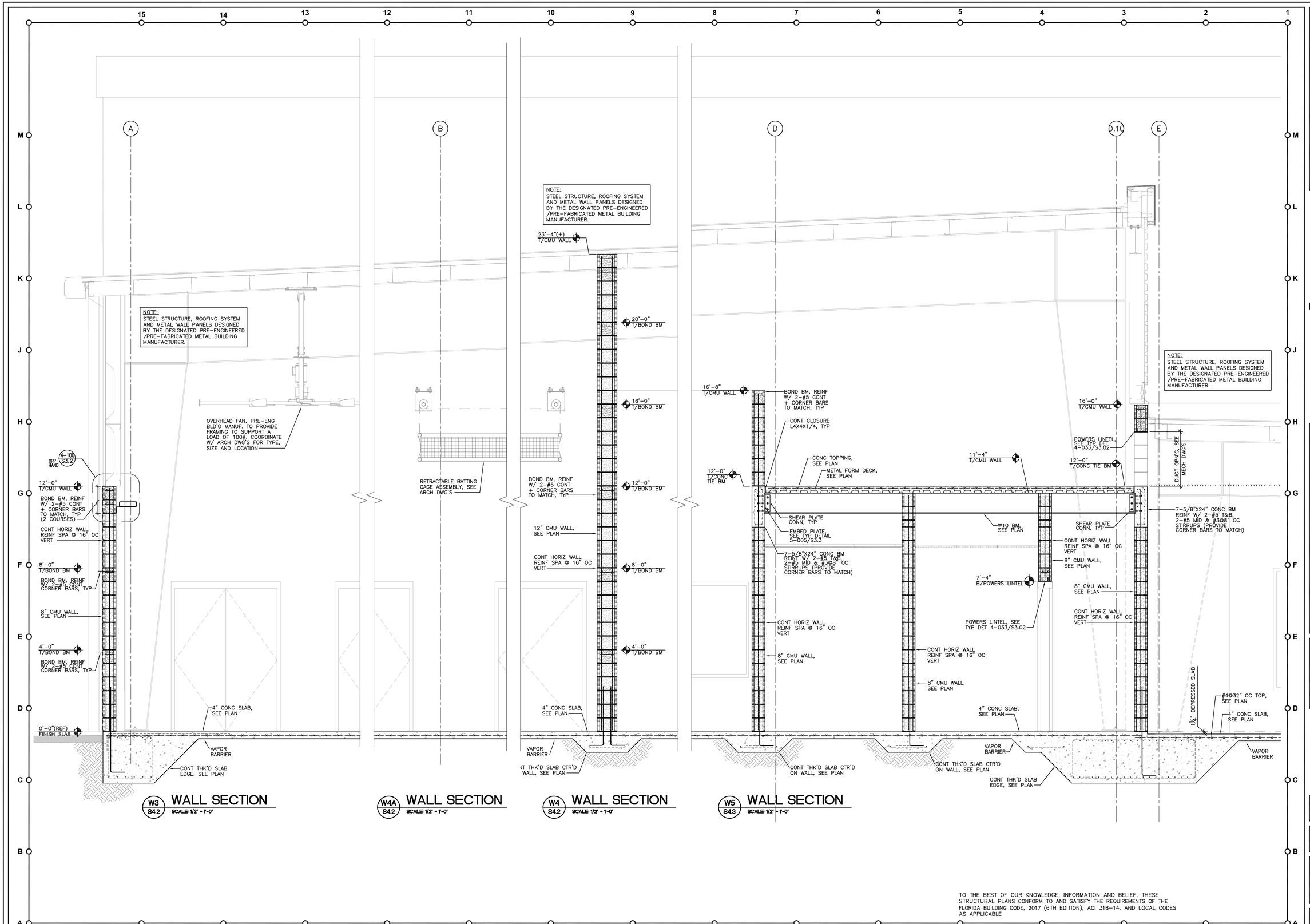

TO THE BEST OF OUR KNOWLEDGE, INFORMATION AND BELIEF, THESE STRUCTURAL PLANS CONFORM TO AND SATISFY THE REQUIREMENTS OF THE FLORIDA BUILDING CODE, 2017 (6TH EDITION), ACI 318-14, AND LOCAL CODES AS APPLICABLE

MASTER CONSULTING ENGINEERS, INC.
STRUCTURAL CONSULTANTS
5023 WEST CYPRESS ST., SUITE 200
TAMPA, FLORIDA 33607
813.287.9600 FAX 813.287.3622
www.mceengineers.com

CN: 8426 PROJ NO. 2300-179

© COPYRIGHT 2018
THIS DRAWING AND ALL INFORMATION CONTAINED HEREIN IS THE SOLE PROPERTY OF MASTER CONSULTING ENGINEERS, INC. AND SHALL NOT BE REPRODUCED IN WHOLE OR IN PART WITHOUT WRITTEN AUTHORIZATION FROM MASTER CONSULTING ENGINEERS, INC.

FleischmanGarcia
ARCHITECTURE · PLANNING · INTERIOR DESIGN
SAINT PETERSBURG OFFICE
195 FOURTH AVENUE NORTH
ST. PETERSBURG, FLORIDA 33705
PHONE (727) 726-6080
FAX (727) 726-0686
324 HYDE PARK AVENUE, SUITE 300
TAMPA, FLORIDA 33606
PHONE (813) 251-4400
FAX (813) 251-4488
5967 CATTLEMEN LANE, SUITE 6
ALBUQUERQUE, NEW MEXICO 87109
PHONE (505) 343-0293
FAX (505) 343-0297
REGISTRATION NUMBER AA C000123

NEW TAMPA RECREATION CENTER ADDITION

TAMPA, FL 33647

THE DESIGN AND DRAWING IS THE SOLE PROPERTY OF FLEISCHMAN-GARCIA, INC. THIS PLAN MAY NOT BE REPRODUCED WITHOUT THE WRITTEN PERMISSION FROM FLEISCHMAN-GARCIA, INC.

I CERTIFY TO THE BEST OF MY KNOWLEDGE THAT THESE DRAWINGS COMPLY W/ ALL RELEVANT BUILDING CODES

FGA PROJECT NUMBER
18015

ISSUE DATE
11/07/18

WALL SECTIONS

SHEET NUMBER
S4.2

T:\2000 Projects\2300 Fleisch\Garcia\2300-179 New Tampa Rec Center Addition 2018\Drafting\Dwg\S4.1 thru S4.5.dwg, 11/9/2018 9:57:27 AM, John
11-09-18 John Weber T:\2000 Projects\2300 Fleisch\Garcia\2300-179 New Tampa Rec Center Addition 2018\Drafting\Dwg\S4.1 thru S4.5.dwg

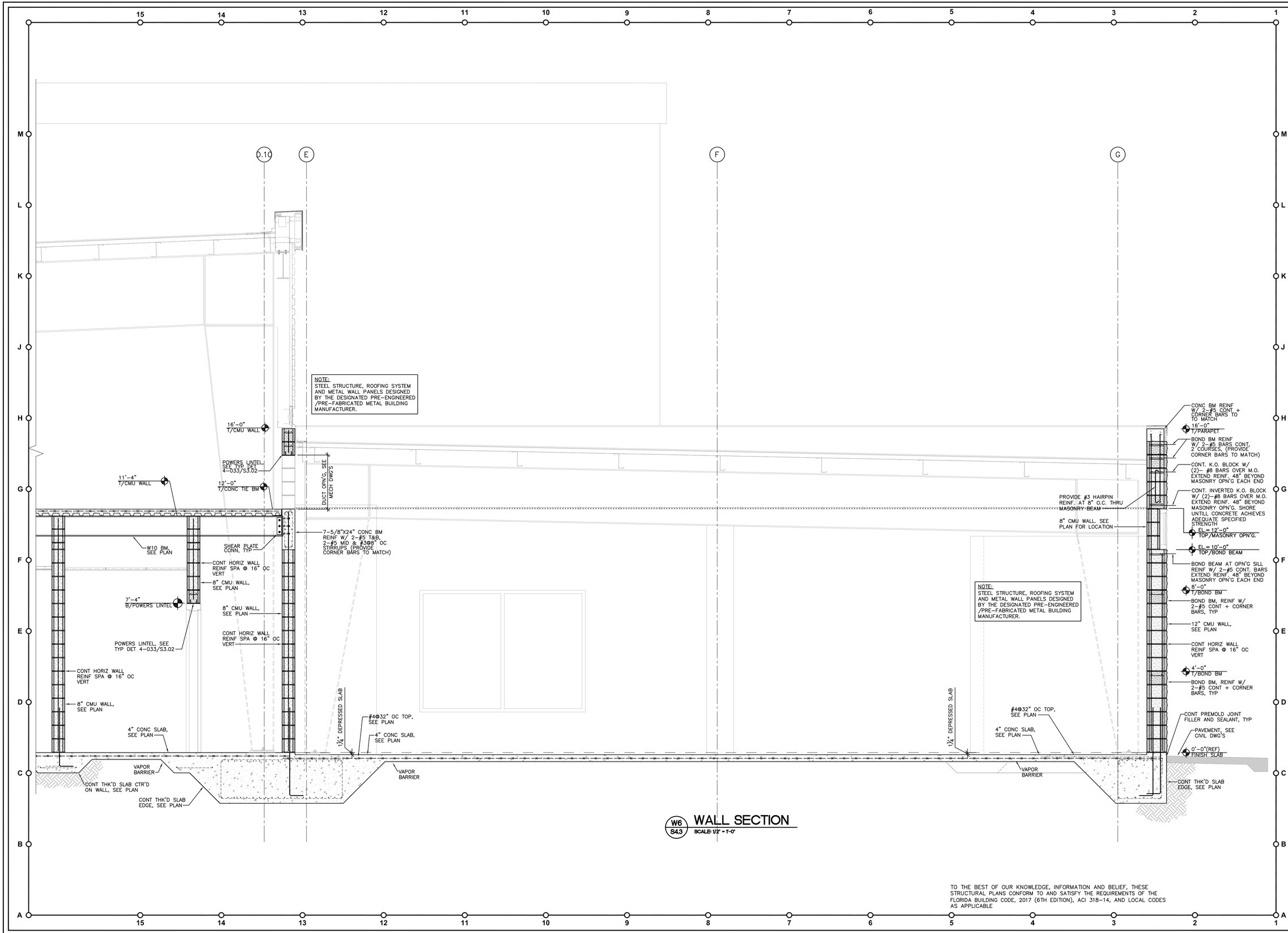

W6 S4.3 **WALL SECTION**
SCALE: 1/2" = 1'-0"

TO THE BEST OF OUR KNOWLEDGE, INFORMATION AND BELIEF, THESE STRUCTURAL PLANS CONFORM TO AND SATISFY THE REQUIREMENTS OF THE FLORIDA BUILDING CODE, 2017 (6TH EDITION), ACI 318-14, AND LOCAL CODES AS APPLICABLE

MASTER CONSULTING ENGINEERS, INC.
STRUCTURAL CONSULTANTS
5023 WEST CYPRESS ST., #200
TAMPA, FLORIDA 33607
813.287.9600 FAX 813.287.3622
www.mceengineers.com

THE DRAWING AND ALL INFORMATION CONTAINED HEREIN IS THE SOLE PROPERTY OF MASTER CONSULTING ENGINEERS, INC. AND SHALL NOT BE REPRODUCED IN WHOLE OR IN PART WITHOUT THE EXPRESS WRITTEN AUTHORIZATION FROM MASTER CONSULTING ENGINEERS, INC.

CN: 8426 PROJ NO. 2200-179
© COPYRIGHT 2018

FleischmanGarcia
ARCHITECTURE · PLANNING · INTERIOR DESIGN
SAINT PETERSBURG OFFICE
195 FOURTH AVENUE NORTH
SAINT PETERSBURG, FLORIDA 33705
PHONE (727) 726-6080
FAX (727) 726-9486
TAMPA OFFICE
324 HYDE PARK AVENUE, SUITE 300
TAMPA, FLORIDA 33606
PHONE (813) 251-4400
FAX (813) 251-4488
5967 CATTLEMEN LAKE, SUITE 6
SARASOTA, FLORIDA 34232
PHONE (941) 342-6293
FAX (941) 342-6253
REGISTRATION NUMBER AA C000123

NEW TAMPA RECREATION CENTER ADDITION

TAMPA, FL 33647

THE DESIGN AND DRAWING IS THE SOLE PROPERTY OF FLEISCHMAN/GARCIA, INC. AND SHALL NOT BE REPRODUCED WITHOUT THE WRITTEN AUTHORIZATION FROM FLEISCHMAN/GARCIA, INC.

CERTIFY TO THE BEST OF MY KNOWLEDGE THAT THESE DRAWINGS COMPLY W/ ALL RELEVANT BUILDING CODES

FGA PROJECT NUMBER
18015

ISSUE DATE
11/07/18

WALL SECTIONS

SHEET NUMBER
S4.3

T:\2000 Projects\2300 Fleisch\Garcia\2200-179 New Tampa Rec Center Addition 2018\Drafting\Dwg\S4.1 thru S4.5.dwg, 11/05/2018 9:06:53 AM, John
11-05-18 John Weber T:\2000 Projects\2300 Fleisch\Garcia\2200-179 New Tampa Rec Center Addition 2018\Drafting\Dwg\S4.1 thru S4.5.dwg

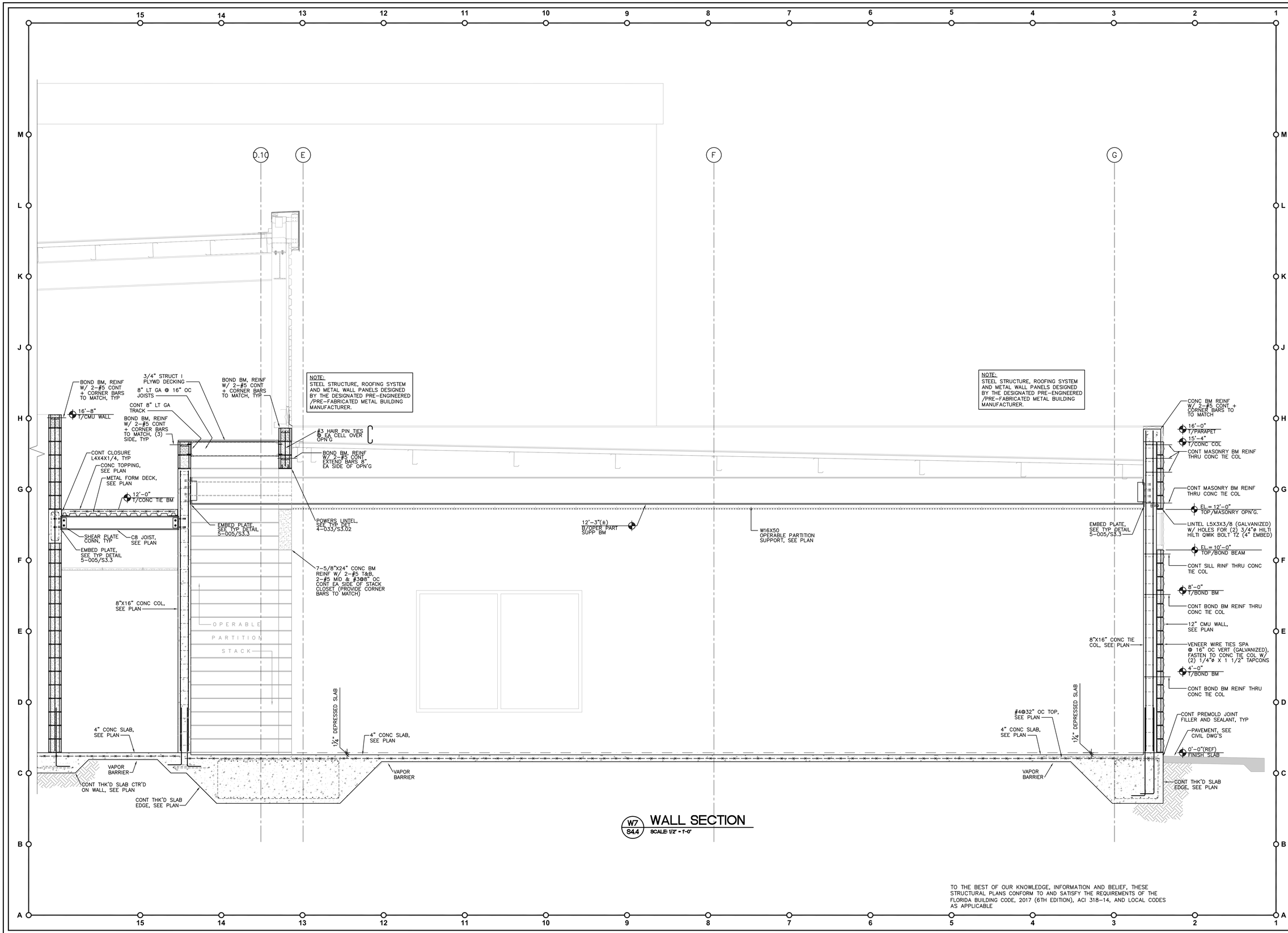

W7 S4.4 **WALL SECTION**
SCALE: 1/2" = 1'-0"

TO THE BEST OF OUR KNOWLEDGE, INFORMATION AND BELIEF, THESE STRUCTURAL PLANS CONFORM TO AND SATISFY THE REQUIREMENTS OF THE FLORIDA BUILDING CODE, 2017 (6TH EDITION), ACI 318-14, AND LOCAL CODES AS APPLICABLE

MASTER CONSULTING ENGINEERS, INC.
STRUCTURAL CONSULTANTS
5023 WEST CYPRESS ST., #200
TAMPA, FLORIDA 33607
813.287.9600 FAX 813.287.3622
www.mceengineers.com

CA: 8426 PROJ NO. 2300-179

© COPYRIGHT 2018
THIS DRAWING AND ALL INFORMATION CONTAINED HEREIN IS THE SOLE PROPERTY OF MASTER CONSULTING ENGINEERS, INC. AND MUST NOT BE REPRODUCED IN WHOLE OR IN PART WITHOUT THE EXPRESS WRITTEN AUTHORIZATION FROM MASTER CONSULTING ENGINEERS, INC.

FleischmanGarcia
ARCHITECTURE · PLANNING · INTERIOR DESIGN
SAINT PETERSBURG OFFICE
195 FOURTH AVENUE NORTH
SAINT PETERSBURG, FLORIDA 33705
PHONE (727) 726-6880
FAX (727) 726-0486
334 HYDE PARK AVENUE, SUITE 300
TAMPA, FLORIDA 33606
PHONE (813) 251-4400
FAX (813) 251-4488
5967 CATTLEMEN LANE, SUITE 6
SARASOTA, FLORIDA 34232
PHONE (941) 342-0253
FAX (941) 342-0253
REGISTRATION NUMBER AA C000123

NEW TAMPA RECREATION CENTER ADDITION

TAMPA, FL 33647

THE DESIGN AND DRAWING IS THE SOLE PROPERTY OF FLEISCHMAN-GARCIA, NO PART OF THIS WORK MAY BE REPRODUCED WITHOUT PERMISSION FROM FLEISCHMAN-GARCIA

I CERTIFY TO THE BEST OF MY KNOWLEDGE THAT THESE DRAWINGS COMPLY WITH ALL RELEVANT BUILDING CODES

FGA PROJECT NUMBER
18015

ISSUE DATE
11/07/18

WALL SECTIONS

SHEET NUMBER
S4.4

T:\2000 Projects\2300 Fleisch\Garcia\2300-179 New Tampa Rec Center Addition 2018\Drafting\Dwg\S4.1 thru S4.5.dwg, 11/9/2018 9:06:23 AM, John
John Weber T:\2000 Projects\2300 Fleisch\Garcia\2300-179 New Tampa Rec Center Addition 2018\Drafting\Dwg\S4.1 thru S4.5.dwg
11-09-18

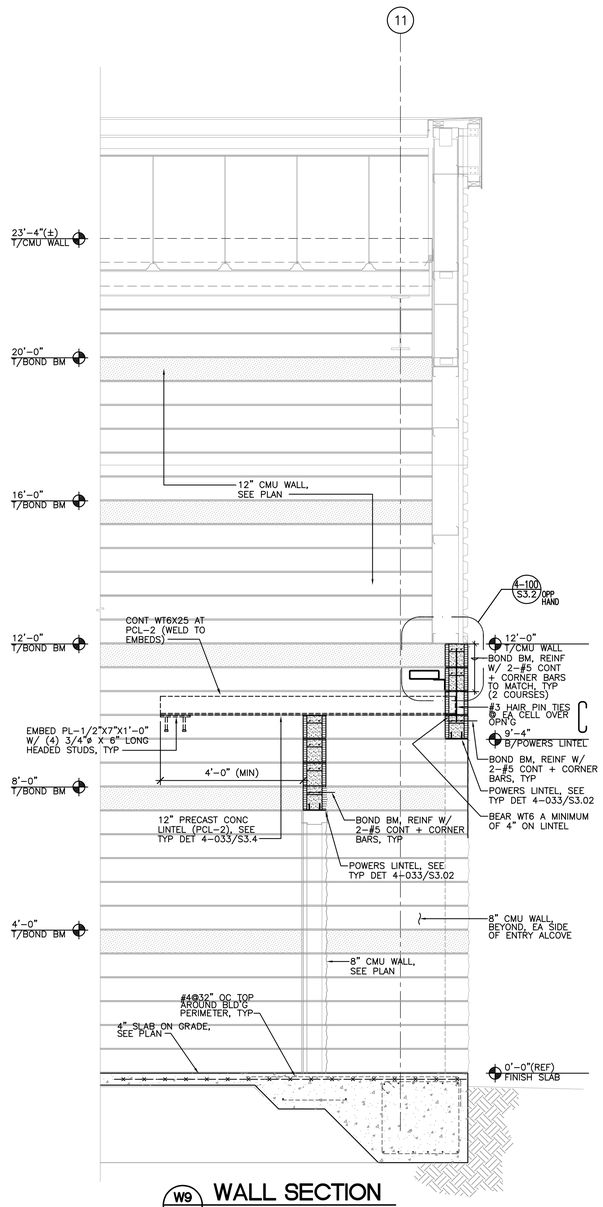

W9 S4.5 WALL SECTION
SCALE: 1/2" = 1'-0"

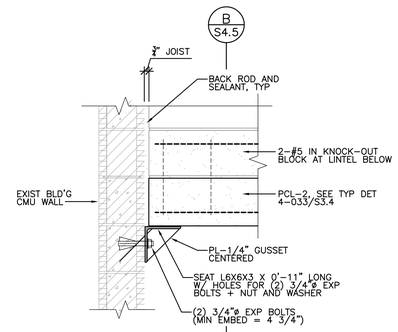

A S4.5 LINTEL DETAIL
SCALE: 1" = 1'-0"

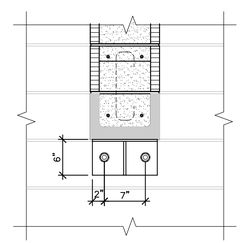

B S4.5 LINTEL DETAIL
SCALE: 1" = 1'-0"

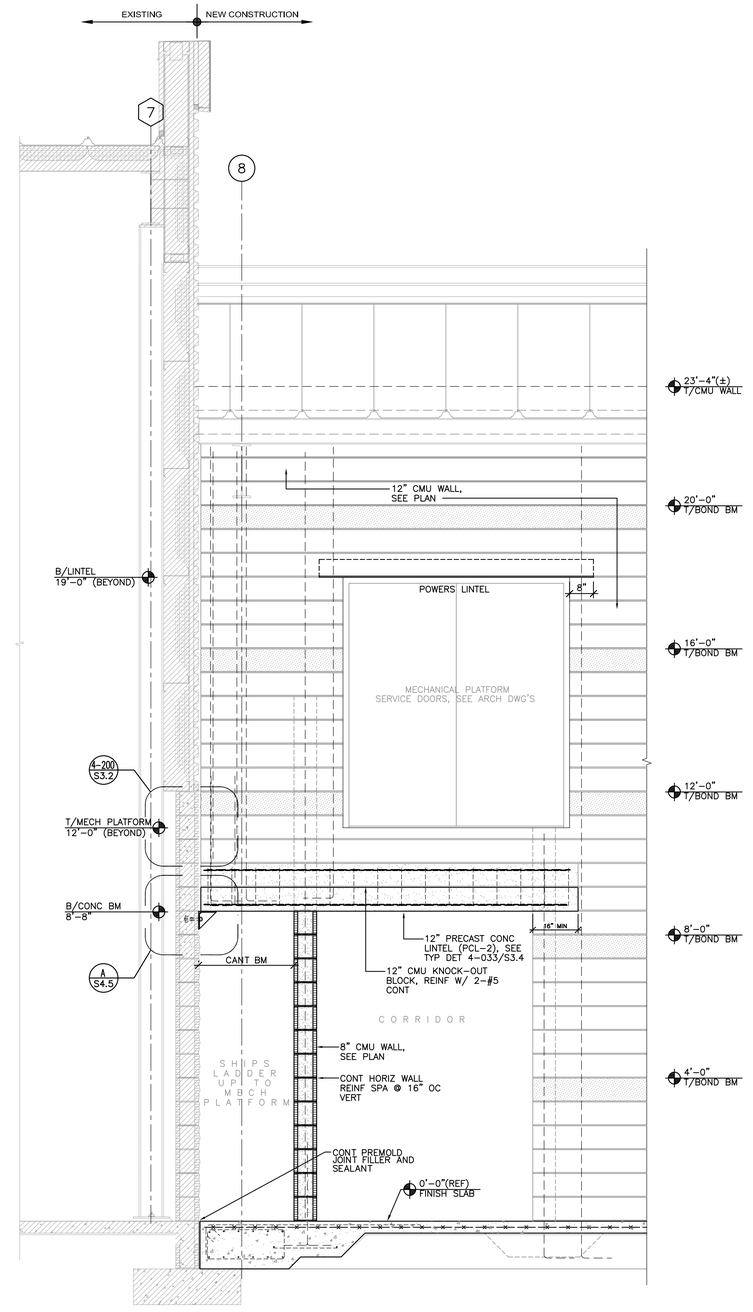

W8 S4.5 WALL SECTION
SCALE: 1/2" = 1'-0"

TO THE BEST OF OUR KNOWLEDGE, INFORMATION AND BELIEF, THESE STRUCTURAL PLANS CONFORM TO AND SATISFY THE REQUIREMENTS OF THE FLORIDA BUILDING CODE, 2017 (6TH EDITION), ACI 318-14, AND LOCAL CODES AS APPLICABLE

MASTER CONSULTING ENGINEERS, INC.
STRUCTURAL CONSULTANTS
5023 WEST CYPRESS ST., #200
TAMPA, FLORIDA 33607
813.287.9600 FAX 813.287.3622
www.mceengineers.com

THIS DRAWING AND ALL INFORMATION CONTAINED HEREIN IS THE SOLE PROPERTY OF MASTER CONSULTING ENGINEERS, INC. AND IS PROTECTED BY COPYRIGHT LAWS. IT MAY NOT BE REPRODUCED OR TRANSMITTED IN ANY FORM OR BY ANY MEANS WITHOUT THE EXPRESS WRITTEN AUTHORIZATION FROM MASTER CONSULTING ENGINEERS, INC.

CN: 8426 PROJ NO. 2300-179
© COPYRIGHT 2018

FleischmanGarcia
ARCHITECTURE · PLANNING · INTERIOR DESIGN
SAINT PETERSBURG OFFICE
195 FOURTH AVENUE NORTH
SAINT PETERSBURG, FLORIDA 33705
PHONE (727) 726-6800
FAX (727) 726-0666
TAMPA OFFICE
324 HYDE PARK AVENUE, SUITE 500
TAMPA, FLORIDA 33606
PHONE (813) 251-4400
FAX (813) 251-4401
5967 CATTLEMEN LANE, SUITE 6
SARASOTA, FLORIDA 34232
PHONE (941) 342-6293
FAX (941) 342-6253
REGISTRATION NUMBER AA C000123

NEW TAMPA RECREATION CENTER ADDITION

TAMPA, FL 33647

THE FIRM AND DRAWING IS THE SOLE PROPERTY OF FLEISCHMAN/GARCIA, INC. THE DRAWING MAY NOT BE REPRODUCED WITHOUT THE WRITTEN PERMISSION FROM FLEISCHMAN/GARCIA

I CERTIFY TO THE BEST OF MY KNOWLEDGE THAT THESE DRAWINGS COMPLY W/ ALL RELEVANT BUILDING CODES

FGA PROJECT NUMBER
18015

ISSUE DATE
11/07/18

WALL SECTIONS

SHEET NUMBER
S4.5

T:\2000 Projects\2300 Fleisch\Garcia\2300-179 New Tampa Rec Center Addition 2018\Drafting\Dwg\S4.1 thru S4.5.dwg, 11/05/2018 5:55:17 AM, John
11-05-18 John Weber T:\2000 Projects\2300 Fleisch\Garcia\2300-179 New Tampa Rec Center Addition 2018\Drafting\Dwg\S4.1 thru S4.5.dwg

MECHANICAL LEGEND

SYMBOL	DESCRIPTION
	NEW DUCTWORK, PIPING, OR EQUIPMENT
	EXISTING DUCTWORK, PIPING, OR EQUIPMENT TO REMAIN
	FLEXIBLE DUCT
	SUPPLY OR OUTSIDE AIR DUCT SECTION
	RETURN OR EXHAUST DUCT SECTION
	EXISTING DUCTWORK, PIPING, OR EQUIPMENT TO BE REMOVED
	DUCTWORK TRANSITION
	MANUAL AIR VOLUME CONTROL DAMPER
	MOTORIZED DAMPER (24 VOLTS)
	NEW FIRE DAMPER
	SUPPLY AIR DEVICE. CLEAR TRIANGLE SIDES INDICATE AIR FLOW PATTERN
	RETURN OR EXHAUST AIR DEVICE
	CONNECTION BETWEEN NEW AND EXISTING WORK
U	UNDERCUT DOOR 1"
AHU-#	EQUIPMENT IDENTIFICATION MARK
#	MECHANICAL NOTE – NUMBER
#	DEMOLITION NOTE–NUMBER
T	WALL MOUNTED THERMOSTAT
S	DUCT MOUNTED SMOKE DETECTOR
	CHECK VALVE
	THREE WAY CONTROL VALVE
	TWO WAY CONTROL VALVE
CHWS	CHILLED WATER SUPPLY
CHWR	CHILLED WATER RETURN
CD	CONDENSATE DRAIN
CD	CEILING DIFFUSER
RRC	RETURN REGISTER AT CEILING
TGC	TRANSFER GRILLE AT CEILING
TT	TWIST TIMER
(E)	EXISTING
P	DUCT PRESSURE SENSOR
AM	AIR MONITORING STATION
M	MOTORIZED DAMPER
MV	MOTORIZED VALVE
FM	FLOW MONITOR
BV	BYPASS CONTROL VALVE

MECHANICAL GENERAL NOTES

- IN GENERAL, PLANS AND DIAGRAMS ARE SCHEMATIC ONLY AND SHOULD NOT BE SCALED.
- INTENT OF THESE NOTES AND MECHANICAL NOTES ON DRAWINGS IS TO CLARIFY THE SCOPE OF WORK AND ALERT CONTRACTOR OF EXISTING CONDITIONS. CONTRACTOR TO VISIT SITE AND VERIFY ALL CLEARANCES BEFORE FABRICATION OF DUCTWORK AND PROVIDE ADDITIONAL OFFSET AND/OR CHANGES IN DUCT SIZES TO MEET FIELD CONDITIONS AND COORDINATE WITH ELECTRICAL, PLUMBING AND FIRE PROTECTION SUBCONTRACTOR BEFORE ANY CONSTRUCTION WORK.
- CONTRACTOR SHALL NOTIFY THE OWNER, ARCHITECT OR HIS AUTHORIZED REPRESENTATIVE OF ANY DAMAGE TO THE EXISTING INSTALLATION BEFORE PROCEEDING WITH THE WORK.
- COORDINATE AIR DEVICE LOCATIONS WITH LIGHTING FIXTURES AND FIRE SPRINKLER HEADS.
- PROVIDE FIRE DAMPER AT ALL RATED WALL & FLOOR PENETRATIONS PER SMACNA STANDARDS.
- TURNING VANES SHALL BE PROVIDED IN ALL SUPPLY DUCT RECTANGULAR ELBOWS WITH ANGLES GREATER THAN 45 DEGREES PER FIG. 2–1, 2–2 & 2–5 OF THE SMACNA MANUAL.
- DUCT DIMENSIONS SHOWN ON DRAWINGS ARE CLEAR INSIDE DIMENSIONS.
- DUCTWORK, DIFFUSERS, REGISTERS, GRILLES, AND OTHER ITEMS OF THE AIR HANDLING SYSTEM SHALL NOT BE SUPPORTED BY THE CEILING OR CEILING SUSPENSION SYSTEM.
- ALL SUPPLY AND RETURN DUCTWORK SHALL BE EXTERNALLY INSULATED SHEET METAL CONSTRUCTION IN ACCORDANCE WITH LATEST SMACNA STANDARDS.
- ALL WALL MOUNTED THERMOSTATS AND/OR TEMPERATURE SENSORS SHALL BE INSTALLED AT AN ELEVATION OF 48" ABOVE FINISHED FLOOR TO THE TOP UNLESS OTHERWISE NOTED ON DRAWINGS. LOCATION OF THE WALL MOUNTED THERMOSTAT SHALL BE COORDINATED WITH OTHER TRADES FOR A NEAT APPEARANCE. FINAL LOCATION OF THERMOSTAT SHALL BE SUBJECT TO THE APPROVAL OF THE ENGINEER OR HIS REPRESENTATIVE IN THE FIELD.
- ALL SUPPLY AIR DIFFUSERS SHALL BE 4–WAY THROW UNLESS OTHERWISE NOTED.
- CONTRACTOR SHALL PROVIDE A COPY OF THE TEST AND BALANCE REPORT AT THE FINAL INSPECTION. THIS REPORT MUST BE REVIEWED AND APPROVED BY THE ENGINEER PRIOR TO THE FINAL ACCEPTANCE.
- ALL DUCTWORK MUST BE INSTALLED 6" AWAY FROM ANY FIRE RATED WALL TO FACILITATE INSPECTION.
- THE GENERAL CONTRACTOR IS RESPONSIBLE FOR ALL TRADES INSTALLATION SCHEDULES. FIXED WORK SUCH AS DUCTWORK AND PLUMBING SHALL BE INSTALLED PRIOR TO ANY TRADE WORK THAT CAN BE EASILY RELOCATED OR OFFSET SUCH AS ELECTRICAL CONDUITS, SMALL WATER LINES ETC.
- UNLESS OTHERWISE NOTED, INSTALL DUCTWORK AS HIGH AS POSSIBLE, TIGHT TO BOTTOM OF STRUCTURE. COORDINATE DUCT ELEVATION WITH RAIN LEADERS, WATER PIPING, SANITARY DRAINS AND MAJOR ELECTRICAL CONDUITS.
- PROVIDE 24 VOLT AUTOMATIC DAMPERS IN ALL OUTSIDE AIR DUCTS.
- FLEXIBLE AND RIGID ROUND DUCT TAKE–OFFS FOR DIFFUSERS SHALL BE THE SAME SIZE AS DIFFUSER NECK. MAXIMUM FLEXIBLE DUCT LENGTH SHALL BE 8'–0".
- PROVIDE A TRAP IN ALL CONDENSATE PIPING LOCATED AT THE AIR HANDLING UNIT. INSULATE ALL CONDENSATE LINES WITH 1/2" THICK CLOSED CELL FOAM INSULATION.
- PROVIDE A 4" HIGH CONCRETE HOUSEKEEPING PAD UNDER ALL MECHANICAL EQUIPMENT, UNLESS OTHERWISE NOTED. PADS SHALL BE 4" LARGER THAN THE EQUIPMENT ON ALL SIDES.
- UNLESS OTHERWISE NOTED, ALL UNDERGROUND PIPING SHALL HAVE A MINIMUM OF 3'–0" OF COVER.
- ALL MECHANICAL WORK SHALL MEET ALL THE REQUIREMENTS OF THE "FLORIDA BUILDING CODE, MECHANICAL – 6TH EDITION (2017)".
- IT IS THE RESPONSIBILITY OF THE MECHANICAL INSTALLER TO PATCH AND REPAIR ANY DUCT OPENINGS WHICH RESULT FROM THE RELOCATION OR ELIMINATION OF ANY EXISTING AIR DEVICES. THE PATCH IS TO BE OF A SIMILAR MATERIAL TO THE REPAIRED DUCT AND TO BE SEALED IN ACCORDANCE WITH SMACNA STANDARDS.
- LOCATIONS OF DUCT MOUNTED SMOKE DETECTORS SHOWN ON THE DRAWINGS ARE REFERENCE LOCATIONS ONLY. THE FINAL PLACEMENT OF THE DETECTOR IN THE DUCTWORK SHALL MEET THE REQUIREMENTS OF THE MANUFACTURER'S INSTALLATION INSTRUCTIONS. PROVIDE A PRESSURE DIFFERENTIAL TEST AND THE MANUFACTURER'S TEST KIT. A COPY OF ALL TEST DATA WILL BE MADE AVAILABLE AT THE FINAL INSPECTION. PROVIDE READILY ACCESSIBLE DUCT ACCESS DOOR FOR INSPECTING AND SERVICING THE DETECTOR. DIVISION 16 SHALL FURNISH DETECTOR, DIVISION 15 SHALL INSTALL DETECTOR, AND DIVISION 16 SHALL WIRE DETECTOR. CONFIRM SMOKE DETECTORS HAVE AUDIBLE ALARM, OR CAUSE SUPERVISORY SIGNAL TO BE INDICATED AT A CONSTANTLY ATTENDED LOCATION. PROVIDE FUNCTIONAL TEST OF FAN SHUTDOWN PRIOR TO C.O., IN ACCORDANCE WITH NFPA 90A.

ALL EXHAUST DUCTS SHALL BE GALVANIZED SHEET METAL.

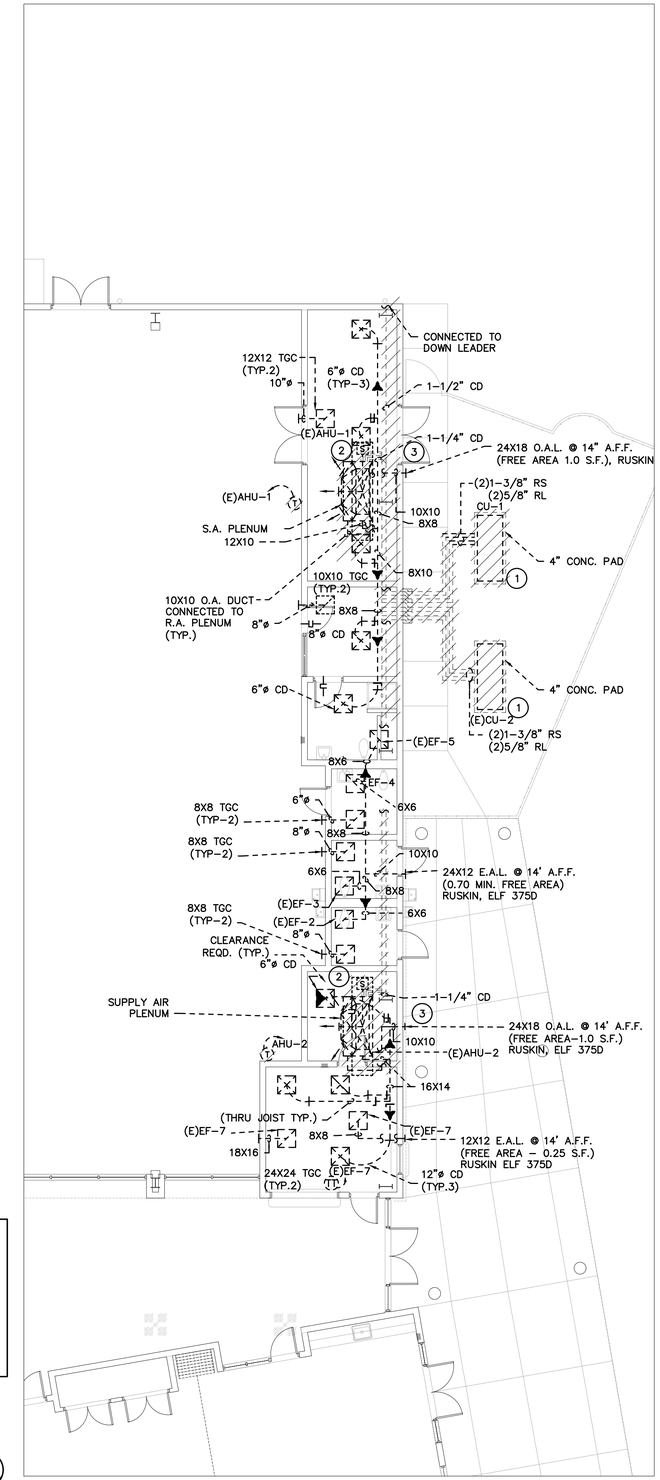

DEMOLITION NOTES :

1. DEMOLISH EXISTING CONDENSING UNITS.
2. DEMOLISH EXISTING AHU'S WITH ALL ASSOCIATED REFRIGERANT PIPING,CONDENSATE PIPING AND CONTROLS. PATCH EXTERIOR WALL WEATHER TIGHT AND MATCH ADJACENT WALL FINISH/COLOR.
3. DEMOLISH OUTSIDE AIR DUCTWORK AND BLANK–OFF LOUVER WITH INSULATED PANEL.

DEMOLITION PLAN – MECHANICAL

SCALE: 1/8"=1'–0"

8053.00

SHANE HAMILTON, P.E.
#75420

Engineering Professionals, Inc.
1717 N. Howard Avenue
Tampa, FL 33607 (813) 251–6848
EB–0006437

FleischmanGarcia.
ARCHITECTURE • PLANNING • INTERIOR DESIGN
SAINT PETERSBURG OFFICE
535 FOURTH AVENUE NORTH
ST. PETERSBURG, FLORIDA 33705
PHONE (727) 726-6380
FAX (727) 726-9066
TAMPA OFFICE
324 HYDE PARK AVENUE, SUITE 350
TAMPA, FLORIDA 33606
PHONE (813) 251-6400
FAX (813) 251-6848
ORLANDO OFFICE
5967 CATTLEMEN LANE, SUITE 6
ORLANDO, FLORIDA 32822
PHONE (941) 342-0293
FAX (941) 342-0293
REGISTRATION NUMBER AA C000123

NEW TAMPA RECREATION CENTER ADDITION

TAMPA, FL 33647

THE DESIGN AND DRAWING IS THE SOLE PROPERTY OF FLEISCHMAN/GARCIA, AND MAY NOT BE USED OR BE REPRODUCED WITHOUT WRITTEN PERMISSION FROM FLEISCHMAN/GARCIA

I CERTIFY TO THE BEST OF MY KNOWLEDGE THAT THESE DRAWINGS COMPLY WITH THE CURRENT BUILDING CODES

FGA PROJECT NUMBER
18015

ISSUE DATE
11/07/18

SHEET NUMBER
M 1.0

11-12-18 Vinod Sharma/Z:\2015_0000\2018_8000\8053\8053-M.dwg

MECHANICAL DRAWING NOTES :

1. PROVIDE DUCT SOX VERONA FABRIC (POROUS) WITH ADJUSTABLE FLOW DEVICE (AFD) AT INLET AND AS RECOMMENDED BY MANUFACTURER.HANGING SYSTEM SHALL BE SKELECORE PULL-TIGHT TO MAINTAIN FABRIC SHAPE AND RETENTION.
2. COORDINATE WITH ARCHITECT FOR EXACT LOCATION ON THE ROOF.
3. RUN ALL DUCT WORK, CHILLED WATER PIPES, CONDENSATE DRAIN PIPES CLOSE ALONG WITH WALL.
4. EACH TOILET ROOM SHALL HAVE WITH AN OCCUPANCY SENSOR CONNECTED TO MOTORIZED DAMPER FOR CLOSURE WHEN TOILET ROOM IS UNOCCUPIED. INSTALL AIR MONITOR STATION IN THE EXHAUST STREAM, ENABLING COINCIDENT REDUCTION OF OUTSIDE AIR MAKE-UP AIR REQUIREMENTS.

CONSTRUCTION NOTES :

1. RECONNECT NEW AHU-2 DUCTWORK TO EXISTING DUCTWORK BELOW.
2. EXISTING AIR DEVICES TO BE RELOCATED TO NEW LOCATION TO FIT NEW CEILING LAYOUT AS SHOWN ON PLAN.
3. FIELD VERIFY/COORDINATE DUCT LOCATION AND AHU'S LOCATION WITH STRUCTURE BEFORE CONSTRUCTION.
4. COORDINATE EXACT LOCATION OF THERMOSTAT IN THE FIELD WITH OWNER.

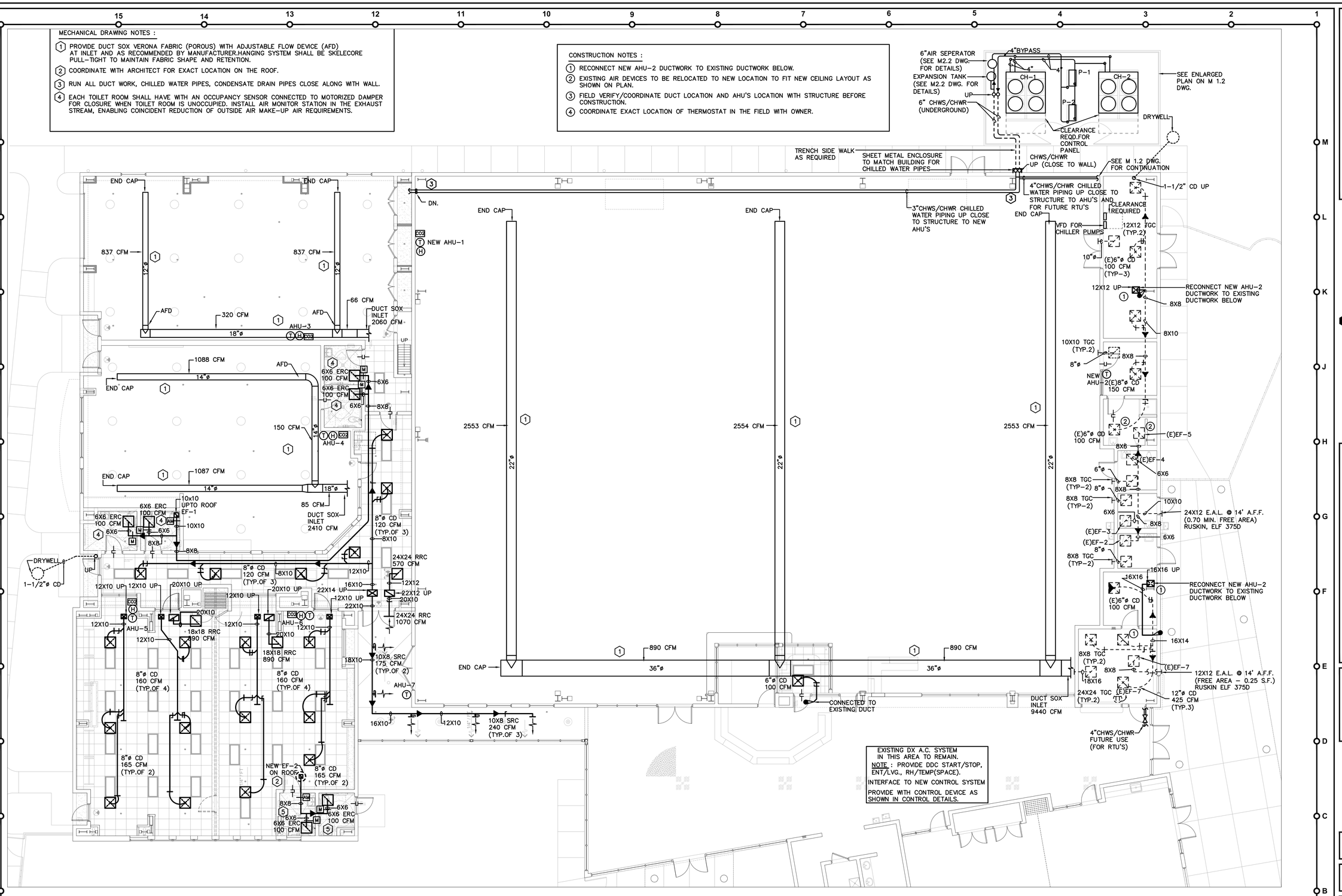

FLOOR PLAN – MECHANICAL

SCALE: 1/8"=1'-0" 8053.00

SHANE HAMILTON, P.E. #75420

Engineering Professionals, Inc.
1717 N. Howard Avenue
Tampa, FL 33607 (813) 251-6848
EB-0006437

FleischmanGarcia.
ARCHITECTURE · PLANNING · INTERIOR DESIGN
SAINT PETERSBURG OFFICE
535 FOURTH AVENUE NORTH
ST. PETERSBURG, FLORIDA 33705
PHONE (727) 726-6380
FAX (727) 726-0666
TAMPA OFFICE
324 HYDE PARK AVENUE, SUITE 300
TAMPA, FLORIDA 33606
PHONE (813) 251-6400
FAX (813) 251-6488
ORLANDO OFFICE
5967 CATTLEMEN LANE, SUITE 6
ORLANDO, FLORIDA 32812
PHONE (941) 342-0293
FAX (941) 342-0523
REGISTRATION NUMBER AA C000123

NEW TAMPA RECREATION CENTER ADDITION

TAMPA, FL 33647

THE DESIGN AND DRAWING IS THE SOLE PROPERTY OF FLEISCHMAN/GARCIA, INC. PART OF THIS DRAWING MAY NOT BE REPRODUCED WITHOUT PRIOR WRITTEN CONSENT FROM FLEISCHMAN/GARCIA, INC.

I CERTIFY TO THE BEST OF MY KNOWLEDGE THAT THIS DRAWING COMPLY WITH ALL RELEVANT BUILDING CODES

FGA PROJECT NUMBER
18015

ISSUE DATE
11/07/18

SHEET NUMBER
M 1.1

Vinod Sharma/Z:\2018_0000\2018_8000\8053\8053-M.dwg
11-12-18

MECHANICAL NOTES:

1. MOUNT AHU INSIDE SECONDARY DRAIN PAN W/ VIBRATION ISOLATION PADS SPACED PER MANUFACTURER'S INSTALLATION INSTRUCTIONS.
2. COORDINATE WITH ARCH. DRAWINGS FOR ALL OUTSIDE AIR LOUVERS AND EXHAUST LOUVERS FOR EXACT LOCATION.
3. RUN ALL DUCT WORK, CHILLED WATER PIPES,CONDENSATE DRAIN PIPES CLOSE ALONG WITH WALL.
4. PROVIDE CLEANOUTS IN CD LINE @ CHANGES IN DIRECTION AND 50 LINEAR FT. INTERVAL MAXIMUM (TYPICAL EACH SYSTEM).
5. PROVIDE AIR MONITOR IN O.A. INLET TO EACH AHU.
6. INSTALL OBD AND MOTORIZED DAMPERS ON RETURN AIR AND OUTSIDE AIR DUTWORK.
7. COORDINATE WITH ARCHITECT FOR EXACT LOCATION ON THE ROOF.
8. WEATHER PROOF ALL SERVICE ALUMINUM JACKET SHALL BE INSTALLED ON ALL EXPOSED CHILLED WATER PIPING.

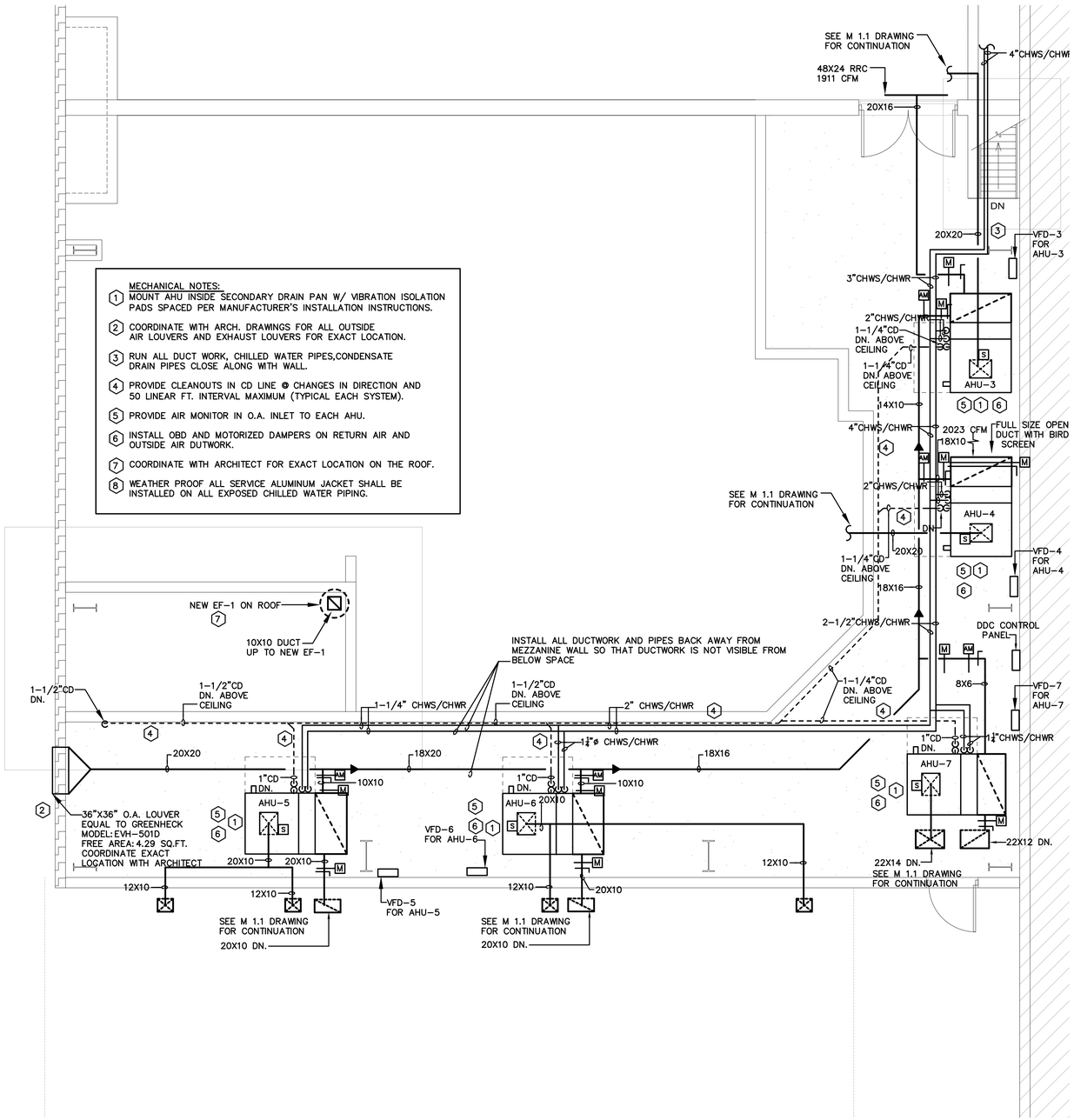

MECHANICAL PLATFORM FLOOR PLAN (ADDITION) – MECHANICAL

SCALE: 1/4"=1'-0"

8053.00

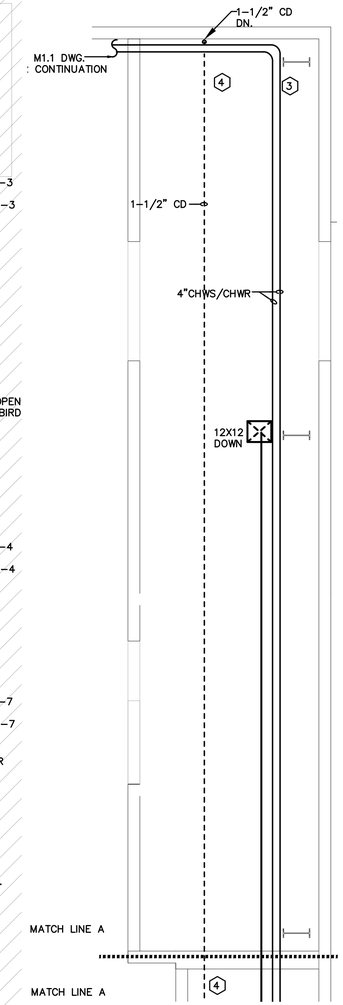

MECHANICAL PLATFORM FLOOR PLAN (EXISTING) – MECHANICAL

SCALE: 1/4"=1'-0"

8053.00

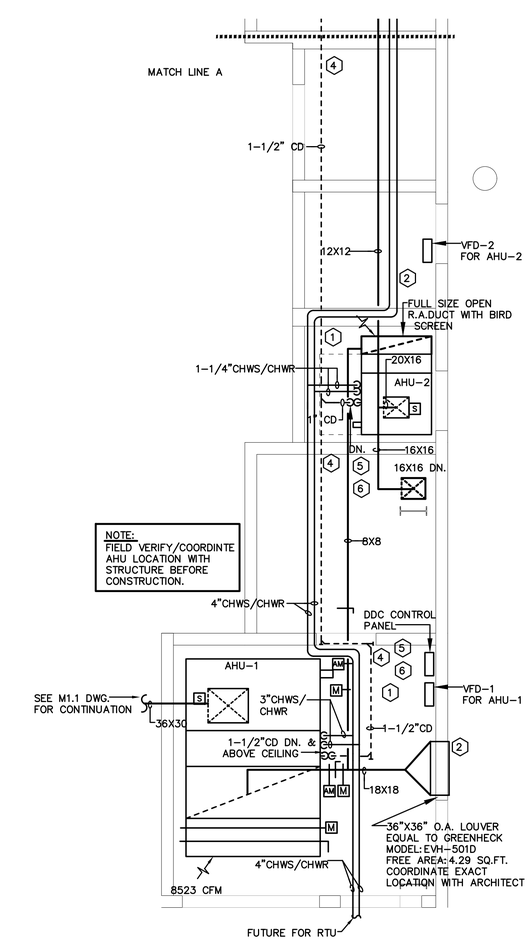

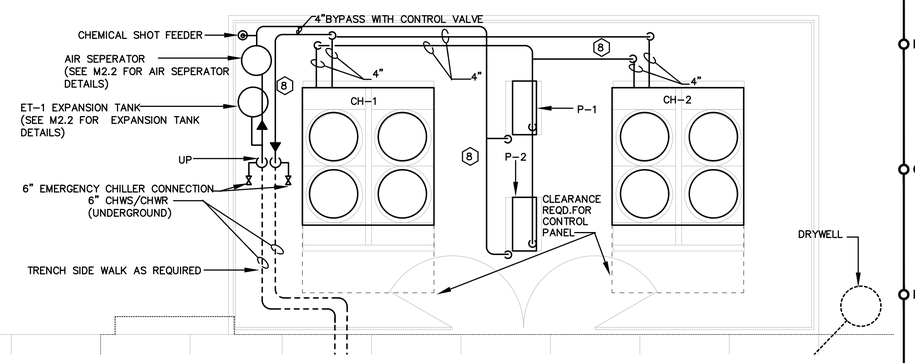

CHILLER YARD – MECHANICAL

SCALE: 1/4"=1'-0"

8053.00

SHANE HAMILTON, P.E. #75420

Engineering Professionals, Inc.
CERTIFICATE OF AUTHORIZATION EB-0006437
1717 N. Howard Avenue
Tampa, FL 33607 (813) 251-6848

FleischmanGarcia.
ARCHITECTURE · PLANNING · INTERIOR DESIGN
SAINT PETERSBURG OFFICE
535 FOURTH AVENUE NORTH
ST. PETERSBURG, FLORIDA 33705
PHONE (727) 726-6380
FAX (727) 726-9066

TAMPA OFFICE
324 HYDE PARK AVENUE, SUITE 300
TAMPA, FLORIDA 33606
PHONE (813) 251-6400
FAX (813) 251-6446
REGISTRATION NUMBER AA C000123

5967 CATTLEMEN LANE, SUITE 6
SARASOTA, FLORIDA 34232
PHONE (941) 342-0293
FAX (941) 342-0253

NEW TAMPA RECREATION CENTER ADDITION

TAMPA, FL 33647

THE DESIGN AND DRAWING IS THE SOLE PROPERTY OF FLEISCHMAN&GARCIA, INC. AND MAY NOT BE REPRODUCED WITHOUT WRITTEN PERMISSION FROM FLEISCHMAN&GARCIA

I CERTIFY TO THE BEST OF MY KNOWLEDGE THAT THESE DRAWINGS COMPLY WITH ALL RELEVANT BUILDING CODES

FGA PROJECT NUMBER
18015

ISSUE DATE
11/07/18

SHEET NUMBER
M 1.2

11-12-18 Vinod Sharma(Z:\2010_0000\2018_8\00180539\8053-M.dwg

AIR COOLED CHILLER SCHEDULE

MARK	–	CH–1 & CH–2	
CAPACITY	TONS	56	
CHILLER AMBIENT	–	95	
WATER FLOW /MIN. FLOW	G.P.M.	134 / 68	
MAX. WATER PRESS. DROP	FT. H_2O	12	
WATER TEMP. ENT/LVG	°F/°F	54/44	
COND.TEMP. MAX. AMBIENT	–	95	
NO. FANS/HP EACH	–	4/	
FLA/COND. FANS	NO./FLA	4/6	
UNIT TOTAL EER	–	10.16	
REFRIGERANT	–	R–410A	
COMPRESSORS	RLA/LRA	–	
STEPS OF CAPACITY	NO.	44	
TOTAL POWER INPUT	KW/FLA	67.12	
ELECTRICAL	V/ø/HZ	208/3ø	
IPLV	KW/TON	15.96	
WEIGHT	LBS.	2580	
LOCATION	–	CHILLER PAD	
MANUFACTURER	–	CARRIER	
MODEL	–	30RAP060	
NOTES	–	(1) THRU (6)	

(1) PROVIDE SINGLE POINT POWER CONNECTION & UNIT MOUNTED DISCONNECT.

(2) ACCESSORIES AND INSTALLED OPTIONS:
COOLER HEATER
NON–FUSED DISCONNECT
MICRO CHANNEL, E–COAT
DIGITAL COMPRESSOR
HIGH EFFICIENCY VARIABLE SPEED CONDENSER FANS
BACNET COMMUNICATIONS
ULTRA LOW SOUND(COMP.SOUND BLANKETS AND AEROACOUSTIC FANS)

(3) SOLID–STATE FLOW MONITOR WITH INTEGRAL RELAY SHALL BE FACTORY INSTALLED AND WIRED.

(4) BRASS BODY STRAINER WITH 40 MESH SCREEN AND BALL TYPE BLOW SHALL BE FACTORY INSTALLED.

(5) ONE YEAR COMPLETE PARTS AND LABOR WARRANTY

(6) EXTENDED 2–5 YEAR PARTS WARRANTY FOR COMPRESSOR(S)

NEW AIR HANDLING UNIT SCHEDULE

MARK	AHU	AHU–1	AHU–2	AHU–3	AHU–4	AHU–5 & 6	AHU–7
SUPPLY AIR	CFM	9440	1950	2060	2410	970	1790
OUTSIDE AIR (MIN./MAX.)	CFM	917/2170	150	149/650	387/950	80/413	150
STATIC PRESSURE IN. H_2O	EXT./TOTAL	0.7/	0.6/	0.6/	0.6/	0.6/	0.6/
MAX. FAN SPEED	RPM	1949	3060	3289	3201	2091	4144
MOTOR	HP	10.0	3.0	5.0	5.0	1.5	5.0
FAN WHEEL TYPE	–	AIRFOIL	FORWARD	FORWARD	FORWARD	FORWARD	FORWARD
FILTER	–	2"MERV8,4"MERV13	2"MERV8,4"MERV13	2"MERV8,4"MERV13	2"MERV8,4"MERV13	2"MERV8,4"MERV13	2"MERV8,4"MERV13
ELECTRICAL	V/ø/HZ	208/3ø	208/3ø	208/3ø	208/3ø	208/3ø	208/3ø
LOCATION	–	MECH. RM.	MECH. RM.	MECH. RM.	MECH. RM.	MECH. RM.	MECH. RM.
MANUFACTURER	–	CARRIER	CARRIER	CARRIER	CARRIER	CARRIER	CARRIER
MODEL	–	39M SIZE21	39M SIZE06	39M SIZE06	39M SIZE06	39M SIZE06	39M SIZE06
AREA SERVED	–	GYM	OFFICE	TRAINING	PRE SCHOOL	MULTI–PURPOSE	CORR
COOLING							
TOTAL CAPACITY	BTUH	359,843	56,305	132,043	120,470	57,935	48,350
SENSIBLE CAPACITY	BTUH	245,530	44,460	71,632	72,470	32,850	39,460
COOLING COIL	ROWS/FINS	6/11	6/8	8/11	6/8	8/8	6/8
COOLING COIL MAX. FACE VEL.	FPM	450	450	450	450	450	450
COOLING COIL MAX. PRES. DROP	IN. H_2O	0.1	0.1	0.1	0.1	0.1	0.1
ENTERING AIR TEMP. (DB/WB)	°F/°F	79.6/67.2	76.5/64.1	81.3/68.8	82.9/70.2	83.5/70.6	76.7/64.3
LEAVING AIR TEMP. (DB/WB)	°F/°F	51.6/51.4	53.5/52.9	49.5/49.5	53.4/53.1	51.5/51.4	53.2/52.6
CHILLED WATER FLOW	GPM	85.4	12.4	22.8	24.7	11.1	11.8
CHILLED WATER TEMP. (ENT/LVG)	°F/°F	54/44	54/44	54/44	54/44	54/44	54/44
MAX. WATER PRESSURE DROP	FT. H_2O	10	10	10	10	10	10
HEATING							
TOTAL CAPACITY	KW/STEPS	53.0/SCR	5.0/SCR	13/SCR	18/SCR	8.0/SCR	8.0/SCR
WEIGHT	LBS	2992 LBS	1456 LBS	1490 LBS	1497 LBS	1203 LBS	1448 LBS
NOTES	–	(2)(3)(4)(5)(6)	(1)(3)(4)(5)(6)	(1)(3)(4)(5)(6)	(1)(3)(4)(5)(6)	(1)(3)(4)(5)(6)	(1)(3)(4)(5)(6)

(1) VERTICAL UNIT AND UNIT SHALL BE 2" DOUBLE WALL CONSTRUCTION WITH R13 FOAM INSULATION.

(2) HORIZONTAL UNIT WITH TOP VERTICAL DISCHARGE, MIXING BOX, UNIT SHALL BE 2" DOUBLE WALL CONSTRUCTION WITH R13 FOAM INSULATION.

(3) PROVIDE VFD (ABB DRIVES, MODEL: ACH 550, SLIM–LINE WITH BYPASS), ELECTRICAL CONNECTION TO VFD BY ELECTRICAL DIVISION.

(4) PROGRAMMABLE T–STAT WITH AUTO CHANGE OVER.

(5) FIELD INSTALLED DISCHARGE HEATER ON THE TOP OF FAN SECTION. SEPARATE POWER DISCONNECT FOR HEATER BY ELECTRICAL DIVISION.

(6) PROVIDE COMPLETE WITH FACTORY 8" HIGH BASE RAIL AND PROVIDE PITCHED DRAIN PAN, SECONDARY DRAIN PAN & FLOAT SWITCH TO SHUT OFF AHU IN THE EVENT OF WATER DETECTION.

SEQUENCE OF OPERATION:

ALL UNITS SHALL CEASE OPERATION UPON DETECTION OF SMOKE.

SINGLE ZONE VARIABLE VOLUME SYSTEM:
THE DEMAND CONTROL VENTILATION SHALL BE FULLY MODULATING TO ENSURE CO2 LEVELS STAY BELOW 1000PPM. AS CO2 PPM RISES, THE OUTSIDE AIR DAMPER SHALL PROPORTIONALLY MODULATE OPEN TOWARD THE MAX OUTSIDE AIR SETTING AS REQUIRED.

RUN CONDITIONS: THE UNIT SHALL RUN BASED ON AN OPERATOR ADJUSTABLE SCHEDULE.
OFF: WHEN THE BUILDING IS INDEXED FOR UNOCCUPIED OPERATION, THE ASSOCIATED SUPPLY AND EXHAUST AIR FANS SHALL BE COMMANDED OFF. THE RETURN AIR DAMPER SHALL FULLY OPEN, THE OUTSIDE AIR DAMPERS SHALL FULLY CLOSE. CONTROLS VALVE SHALL MODULATE TO THEIR NORMAL POSITION. THE AIR HANDLING UNIT SHALL CYCLE ON TO MAINTAIN UNOCCUPIED SPACE TEMPERATURE SETPOINT (ADJUSTABLE).
UNOCCUPIED (MORNING COOL–DOWN OR WARM–UP): THE RETURN AIR DAMPER SHALL REMAIN FULLY OPEN AND THE OUTSIDE AIR DAMPERS SHALL REMAIN CLOSED. ASSOCIATED EXHAUST FANS SHALL NOT OPERATE DURING THE COOL DOWN OR WARM UP MODE. THE UNIT SHALL START PRIOR TO SCHEDULED OCCUPANCY BASED ON AN OPERATOR ADJUSTABLE SCHEDULE. AFTER PROOF OF FAN STATUS TEMPERATURE CONTROL ALGORITHMS SHALL BE ENABLED.
OCCUPIED: WHEN THE BUILDING IS INDEXED FOR OCCUPIED OPERATION BY THE BAS, THE OUTSIDE AIR DAMPERS SHALL OPEN. ASSOCIATED EXHAUST AIR FANS SHALL BE ENERGIZED. AFTER PROOF OF FAN STATUS TEMPERATURE CONTROL ALGORITHMS SHALL BE ENABLED.
FAN CONTROL: THE SPEED OF THE AHU SUPPLY FAN SHALL BE MODULATED VIA A VARIABLE FREQUENCY DRIVE (VFD) TO MAINTAIN SPACE TEMPERATURE. THE DDC CONTROLLER WILL MODULATE BETWEEN MINIMUM AND MAXIMUM VFD SITTINGS TO MAINTAIN THE SPACE TEMPERATURE AT COOLING SETPOINT. WHEN THE SPACE TEMPERATURE DROPS BELOW HEATING SETPOINT, THE VFD WILL BE INDEXED TO THE MINIMUM VFD SETTING AND THE ELECTRIC HEAT WILL BE ENERGIZED IN STAGES TO MAINTAIN SETPOINT. THE SPACE TEMPERATURE SET POINT IS SOFTWARE SET TO 75°F COOLING AND 70°F HEATING, ADJUSTABLE IN SOFTWARE ONLY.
OUTSIDE AIR CONTROL: OUTSIDE AIR SHALL BE PROVIDED WHEN THE UNIT IS IN OCCUPIED MODE. THE OUTSIDE AIR DAMPER WILL BE FULLY MODULATING BASED ON THE DEMAND FROM THE CO2 SENSORS IN THE SPACE.SEE SCHEDULE FOR MINIMUM AND MAXIMUM OUTSIDE AIR SETTING AND THE RETURN AIR DAMPER SHALL BE MODULATED TO MAINTAIN OUTSIDE AIRFLOW SENSED BY AIRFLOW MEASURING STATION.

EXHAUST FAN CONTROLS:
UNOCCUPIED: WHEN THE BUILDING IS INDEXED FOR UNOCCUPIED OPERATION. THE FAN WILL BE DE–ENERGIZED.
OCCUPIED: WHEN ANY REST ROOM OCCUPANCY SENSOR IS ACTIVATED, THE ASSOCIATED REST ROOM MOTORIZED DAMPER SHALL OPEN AND THE FAN SHALL BE ENERGIZED. TYPICAL FOR EACH REST ROOM. WHEN ANY OCCUPIED SENSOR IS DE–ENERGIZED, MOTORIZED DAMPER CLOSES, FAN TO BEGIN TO DE–ENERGIZED. FAN SPEED TO BE CONTROLLED BY DUCT MOUNTED AIR FLOW SENSOR TO ACCOMMODATE CLOSING OF MOTORIZED DAMPER.

CHILLER PLANT:
THE CHILLER PLANT WILL BE INDEXED FOR OPERATION ANYTIME A CHILLED WATER AHU IS IN OPERATION AND THE OUTSIDE AIR TEMPERATURE IS ABOVE 55°, ADJUSTABLE. UPON BEING INDEXED TO RUN, THE LEAD CHILLER'S ISOLATION VALVE WILL BE OPENED AND THE LEAD CHILLED WATER PUMP WILL BE ENERGIZED AND ITS VFD SET TO RUN TO MAINTAIN THE FLOW REQUIRED FOR ONE CHILLER. UPON PROOF OF PUMP OPERATION VIA CURRENT SWITCH, THE LEAD CHILLER WILL BE ENABLED FOR OPERATION.
THE LAG CHILLER WILL BE ENABLE IF THE CAMPUS SUPPLY WATER TEMPERATURE EXCEED 47°, ADJUSTABLE, FOR 30 MINUTES. THE LEAD PUMP'S VFD WILL BE SET TO RUN TO MAINTAIN THE FLOW REQUIRED FOR TWO CHILLERS.
THE LEAD CHILLER AND PUMPS WILL BE ALTERNATED ON A WEEKLY BASIS.
MOTORIZED VALVE TO OPEN WHEN CHILLER MINIMUM FLOW ACHIEVED.

MINIMUM CODE REQUIRED OUTSIDE AIR VENTILATION RATES

PER ASHRAE STANDARD 62.1–2010

$\frac{AzRa+PzRp}{Ez} = Voz$

AREA–SERVED	OCCUPANCY CATEGORY	DEFAULT OCCUPANT DENSITY	NET AREA Az	AREA OUTDOOR AIR RATE Ra	CODE REQ'D BASED ON FLOOR AREA		NUMBER PEOPLE Pz	PEOPLE OUTDOOR AIR RATE Rp	CODE REQ'D OA BASED ON PEOPLE	CODE REQ'D OA TOTAL VBz AzRa+PzRp		ZONE AIR DISTRIBUTION EFFECTIVENESS Ez		TOTAL OA REQUIRED BY CODE Voz
		P/1000 SF	SF	CFM/S.F.	CFM		PERSON(S)	CFM/PERS	CFM	CFM				CFM
GYM	HEALTH CLUB	COUNT	12,224	0.06	733	+	50	20	1000	1733	/	0.8	=	2167
OFF/SNACK	OFFICE	COUNT	590	0.06	36	+	10	5	50	86	/	0.8	=	108
MULTI–PURPOSE	CONFERENCE	50	2100	0.06	126	+	105	5	525	651	/	0.8	=	815
PRE–SCHOOL	DAYCARE	25	1700	0.18	309	+	43	10	430	739	/	0.8	=	923
TRAINING	HEALTH CLUB	10	1975	0.06	119	+	20	20	400	519	/	0.8	=	650
CORRIDOR AREA	CORRIDOR	–	1585	0.06	95	+	–	–	–	95	/	0.8	=	119
												TOTAL REQUIRED	=	4782
												TOTAL PROVIDED	=	4896

AIR DEVICE SCHEDULE

MARK	TYPE	MATERIAL	FINISH	ACCESSORIES	MANUFACTURER AND MODEL	REMARKS
CD	CEILING DIFFUSER	ALUMINUM	BAK. WHT. ENAMEL	OBD	PRICE AMD	.
SRC	SUPPLY REGISTER	ALUMINUM	BAK. WHT. ENAMEL	OBD	PRICE 620FS	.
ERC	EXHAUST REGISTER	ALUMINUM	BAK. WHT. ENAMEL	OBD	PRICE 630FL	.
RGC	RETURN GRILLE	ALUMINUM	BAK. WHT. ENAMEL	.	PRICE 630FL	.
RRC	RETURN REGISTER	ALUMINUM	BAK. WHT. ENAMEL	OBD	PRICE 630FL	.
TGC	TRANSFER GRILLE	ALUMINUM	BAK. WHT. ENAMEL	.	PRICE 630FL	.

EXISTING FAN SCHEDULE

TAG	–	(E)EF–1	(E)EF–2,3	(E)EF–4	(E)EF–5	(E)EF–6	(E)EF–7
SERVICE	–	TOILETS	TOILETS	TOILETS	TOILETS	ELECT. RM.	SNACK BAR
AIR QUANTITY	CFM	950	100	75	150	250	200
EXT. STATIC PRESS.	IN. H_2O	0.375	0.375	0.375	0.375	0.250	0.375
FAN TYPE	–	PRV	CEILING	CEILING	CEILING	PRV	CEILING
DRIVE	–	DIRECT	DIRECT	DIRECT	DIRECT	DIRECT	DIRECT
SONES	–	7.7	2.7	2.7	2.5	5.5	4.4
MOTOR	H.P./WATTS	1/8	80W	80W	129W	1/30	83W
FAN SPEED	RPM	860	950	950	1050	1300	1000
POWER	V/ø	120/10ø	120/10ø	120/1ø	120/1ø	120/1ø	120/1ø
CONTROL	–	W/(E)RTU–1 2, 3	LIGHTS	LIGHTS	LIGHTS	T–STAT	TWIST TIMER
LOCATION	–	TOILETS	TOILETS	TOILETS	TOILETS	ELECT. RM.	SNACK BAR
MANUFACTURER	–	GREENHECK	GREENHECK	GREENHECK	GREENHECK	GREENHECK	GREENHECK
MODEL	–	G–150–C	SP–B110	SP–B110	SP–B150	G080–G	SP–A250
NOTES	(#)	(1)	(1)	(1)	(1)	(1)(2)	(1)

(1) ALL EXISTING FANS TO REMAIN.MECHANICAL CONTRACTOR TO VERIFY PROPER OPERATION AND SERVICE AS REQUIRED.

NEW FAN SCHEDULE

TAG	–	NEW EF–1	NEW EF–2	
SERVICE	–	REST ROOM	REST ROOM	
AIR QUANTITY	CFM	400	200	
EXT. STATIC PRESS.	IN. H_2O	0.6	0.6	
FAN TYPE	–	CENTRIFUGAL	CENTRIFUGAL	
DRIVE	–	DIRECT	DIRECT	
SONES	–	10.4	7.8	
MOTOR	H.P./WATTS	1/6	1/10	
FAN SPEED	RPM	1531	1579	
POWER	V/ø	120/1ø	120/1ø	
CONTROL	–	W/BAS	W/BAS	
LOCATION	–	ROOF	ROOF	
MANUFACTURER	–	GREENHECK	GREENHECK	
MODEL	–	G–095–VG	G–080–VG	
NOTES/ACCESSORIES	(#)	(1)	(1)	

(1) COMPLETE WITH 18" ROOF CURB, BACKDRAFT DAMPER,FAN SPEED CONTROLLER/ DISCONNECT SWITCH AND VARIABLE SPEED ECM.

PUMP SCHEDULE

MARK	–	P–1 & P–2
SERVICE	–	CHILLED WATER
PUMP TYPE	–	BASE MOUNTED END SUCTION
WATER FLOW	G.P.M.	268
TOTAL DYNAMIC HEAD	FT. H_2O	85
MOTOR	H.P.	10
SPEED (IMPELLER)	R.P.M.	1750
HEAD ALLOWANCE FOR CONTROL VALVE	FT. H_2O	15
ELECTRICAL	V/ø/HZ	208/3ø
MOUNTING LOCATION	–	CHILLER PAD
MANUFACTURER	–	BELL&GOSSETT
MODEL NUMBER	–	2.5BB
NOTES	(#)	(1)(2)(3)(4)(5)

(1) COMPLETE WITH PREMIUM EFFICIENCY MOTOR – NON–OVERLOADING

(2) PROVIDE VARIABLE SPEED DRIVE (ABB DRIVES, MODEL: ACH 550,SLIM LINE WITH BYPASS).

(3) PROVIDE INERTIA BASE RATED FOR OUTDOOR INSTALLATION– VMC AMBER BOOTH PUMP INERTIA BASES, SIZE 24X48X6, FOR OUTDOOR USE.

(4) PROVIDE DIFFUSER AND TRIPLE DUTY VALVES.

(5) STAINLESS STEEL FLEX CONNECTORS.

EXPANSION TANK SCHEDULE

MARK	–	ET–1
MANUFACTURER	–	AMTROL
MODEL NUMBER	–	35–LBC
TANK VOLUME	GALS.	10
ACCEPT. VOLUME	GALS.	10
PIPE CONNECTION	INCHES	1"
SHIPPING WEIGHT	LBS.	67
CHARGE PRESSURE	PSIG	.
MIN/MAX OPERATING TEMP.	°F	40/70
MIN/MAX OPERATING PRESS.	PSIG	70/125
MAX WORKING PRESSURE	PSI	125
SYSTEM TYPE	–	CHILLED WATER
MOUNTING	–	FLOOR
LOCATION	–	CHILLER YARD
NOTES	(#)	

SHANE HAMILTON, P.E.
#75420

Engineering Professionals, Inc.
Mechanical Engineers EB–0006437
1717 N. Howard Avenue
Tampa, FL 33607 (813) 251–6848

FleischmanGarcia
ARCHITECTURE • PLANNING • INTERIOR DESIGN
SAFETY HARBOR OFFICE
195 FOURTH AVENUE NORTH
SAFETY HARBOR, FLORIDA 34695
PHONE (727) 725-8880
FAX (727) 725-3900
TAMPA OFFICE
324 HYDE PARK AVENUE, SUITE 300
TAMPA, FLORIDA 33606
PHONE (813) 251-4400
FAX (813) 251-1994
REGISTRATION NUMBER AA C000123
SARASOTA OFFICE
5967 CATTLEMEN LANE, SUITE 6
SARASOTA, FLORIDA 34232
PHONE (941) 342-9293
FAX (941) 342-9253

NEW TAMPA RECREATION CENTER ADDITION
TAMPA, FL 33647

THIS DESIGN AND DRAWING IS THE SOLE PROPERTY OF FLEISCHMANGARCIA. NO PART OF THIS WORK MAY BE REPRODUCED WITHOUT PRIOR WRITTEN PERMISSION FROM FLEISCHMANGARCIA.

I CERTIFY TO THE BEST OF MY KNOWLEDGE THAT THESE DRAWINGS COMPLY W/ ALL RELEVANT BUILDING CODES

FGA PROJECT NUMBER
18015

ISSUE DATE
11/07/18

SHEET NUMBER
M 2.1

11-12-18 Vinod Sharma Z:\2010_0000\2018_8000\8053\8053-M.dwg

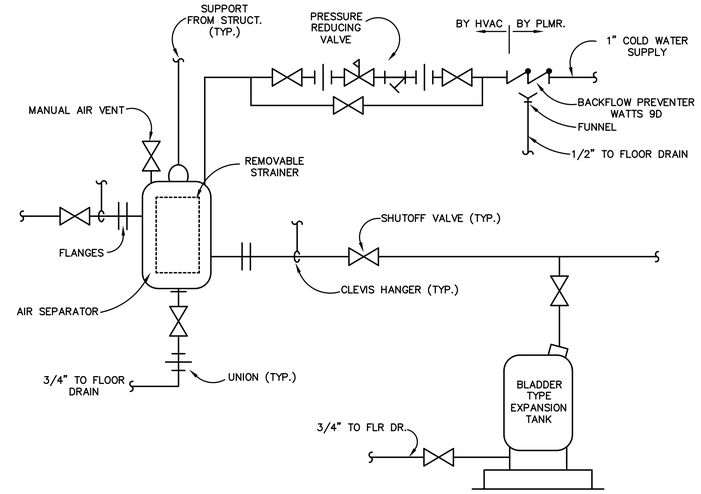

AIR SEPARATOR & EXPANSION TANK DETAIL

NO SCALE

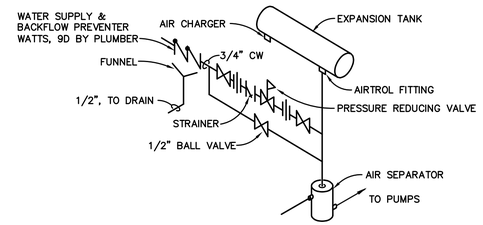

EXPANSION TANK PIPING DETAIL

NO SCALE (FOR HEATING SYSTEMS)

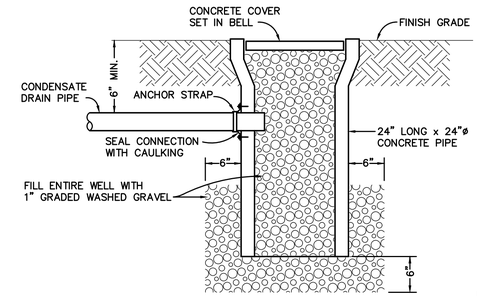

DRYWELL DETAIL

NO SCALE

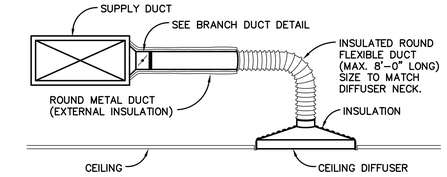

CEILING DIFFUSER RUNOUT DETAIL

NO SCALE

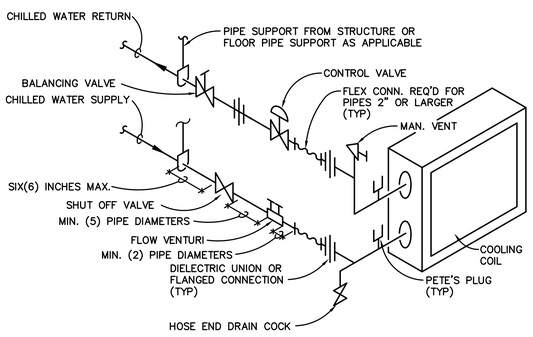

AHU CHILLED WATER COIL CONNECTION DETAIL–2 WAY VALVE

NO SCALE FOR AHU–2,3,4,6,7

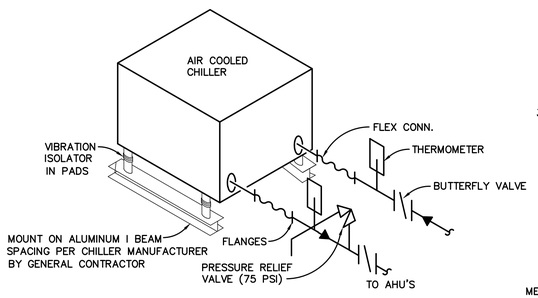

CHILLER PIPING DETAIL

NO SCALE

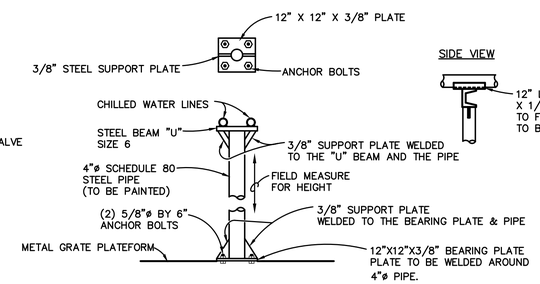

PIPE SUPPORT DETAIL FOR CHILLED WATER PIPES

NO SCALE

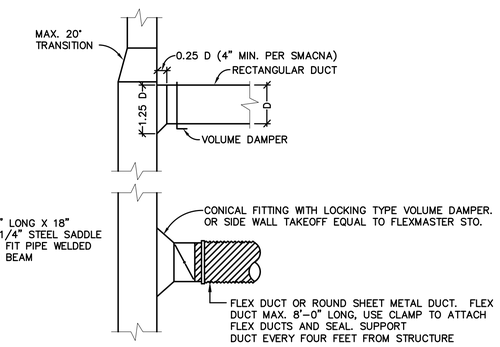

BRANCH DUCT DETAILS

NO SCALE

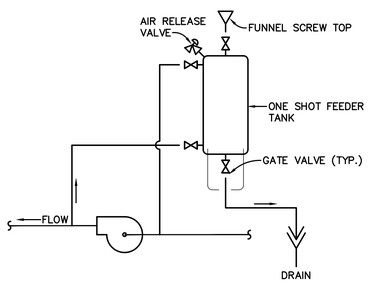

CHEMICAL SHOT FEEDER DETAIL

NO SCALE

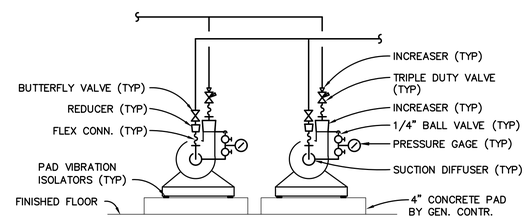

PUMP CONNECTION DETAIL

NO SCALE

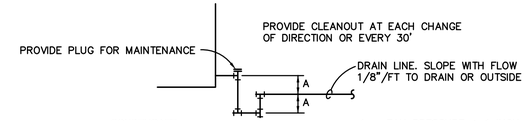

MAX. TONS	CONDENSATE PIPE SIZE
2	3/4"
5	1"
30	1 1/4"
50	1 1/2"

CONDENSATE DRAIN TRAP DETAIL

NO SCALE (FOR DRAW THRU APPLICATIONS)

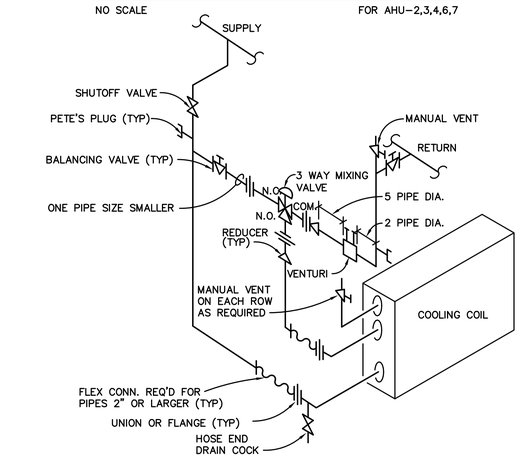

AHU CHILLED WATER COIL CONNECTION DETAIL– THREE WAY VALVE

NO SCALE FOR AHU–1 & AHU–5 ONLY

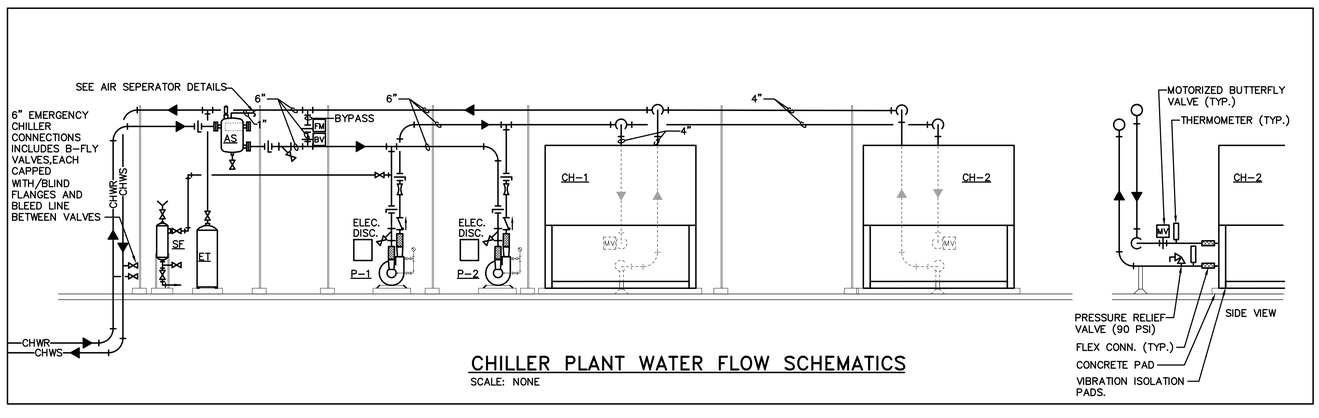

CHILLER PLANT WATER FLOW SCHEMATICS

SCALE: NONE

SHANE HAMILTON, P.E. #75420

Engineering Professionals, Inc.
17172 N. Howard Avenue, Suite 2
Tampa, FL 33527 (813) 251-6848
EB-0006437

FleischmanGarcia.
ARCHITECTURE • PLANNING • INTERIOR DESIGN
SAINT PETERSBURG OFFICE
535 FOURTH AVENUE NORTH
ST. PETERSBURG, FLORIDA 33705
PHONE (727) 823-6880
FAX (727) 823-6888
TAMPA OFFICE
324 HYDE PARK AVENUE, SUITE 300
TAMPA, FLORIDA 33606
PHONE (813) 251-6400
FAX (813) 251-6888
ALASKA OFFICE
5960 CATTLEMEN LANE, SUITE 6
ANCHORAGE, ALASKA 99502
PHONE (907) 342-0292
FAX (907) 342-0293
REGISTRATION NUMBER AA C000123

NEW TAMPA RECREATION CENTER ADDITION

TAMPA, FL 33647

THE DESIGN AND DRAWING IS THE SOLE PROPERTY OF FLEISCHMAN/GARCIA, INC. PARTS OF THIS DRAWING MAY NOT BE REPRODUCED WITHOUT PRIOR WRITTEN PERMISSION FROM FLEISCHMAN/GARCIA

I CERTIFY TO THE BEST OF MY KNOWLEDGE THAT THOSE DRAWINGS COMPLY WITH ALL RELEVANT BUILDING CODES

FGA PROJECT NUMBER
18015

ISSUE DATE
11/07/18

SHEET NUMBER
M 2.2

Vinod Sharma\Z:\2018_0000\2018_8000\8053\8053-M.dwg
11-12-18

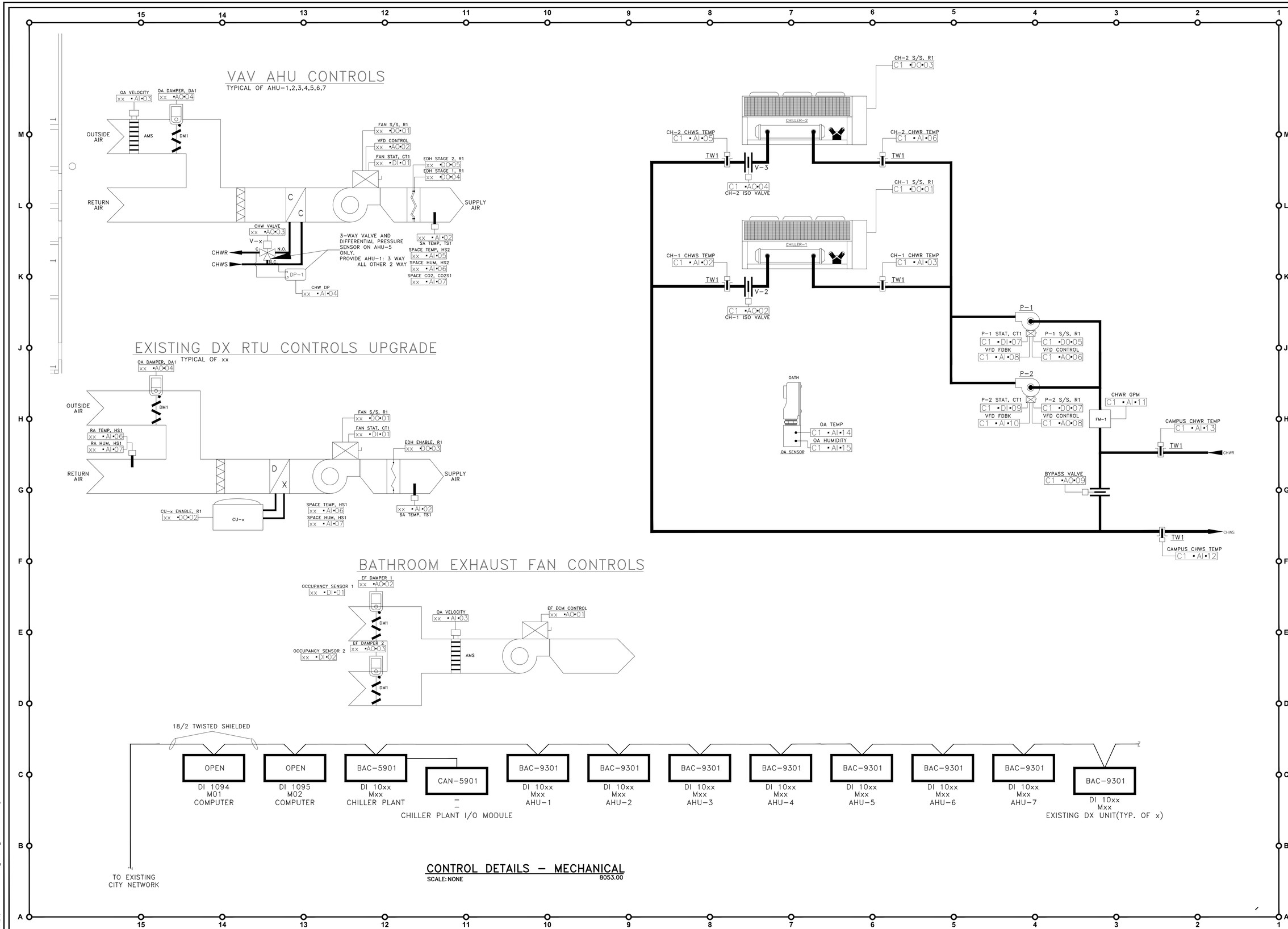

SHANE HAMILTON, P.E.
#75420

Engineering Professionals, Inc.
Mechanical Engineering
EB-0006437
1717 N. Howard Avenue
Tampa, FL 33607 (813) 251-6848

FleischmanGarcia.
ARCHITECTURE · PLANNING · INTERIOR DESIGN
SAFETY · MARKETING · STRATEGY
395 FOURTH AVENUE NORTH
SAINT PETERSBURG, FLORIDA 33705
PHONE (727) 726-6800
FAX (727) 726-0666
324 HYDE PARK AVENUE, SUITE 300
TAMPA, FLORIDA 33606
PHONE (813) 251-6400
FAX (813) 251-6666
3960 CATALDEN LANE, SUITE 6
ALBANY, GEORGIA 31707
PHONE (941) 342-0293
FAX (941) 342-0253
REGISTRATION NUMBER AA C000123

NEW TAMPA RECREATION CENTER ADDITION

TAMPA, FL 33647

THE DESIGN AND DRAWING IS THE SOLE PROPERTY OF FLEISCHMANGARCIA, AND MAY NOT BE USED OR BE REPRODUCED WITHOUT PRIOR WRITTEN PERMISSION FROM FLEISCHMANGARCIA.

I CERTIFY TO THE BEST OF MY KNOWLEDGE THAT THESE DRAWINGS COMPLY WITH ALL RELEVANT BUILDING CODES

FGA PROJECT NUMBER
18015

ISSUE DATE
11/07/18

SHEET NUMBER
M 2.3

11-12-18 Vinod Sharma(Z:\2017\0_0005\2018_B0080\B0080\B0053-M.dwg

SECTION 1 - 66 CFM
ISOTHERMAL THROW
BASED ON TERMINAL
VELOCITY OF 50, 100, & 150 FPM

SECTION 3 - 320 CFM
ISOTHERMAL THROW
BASED ON TERMINAL
VELOCITY OF 50, 100, & 150 FPM

SECTION 5 - 837 CFM
ISOTHERMAL THROW
BASED ON TERMINAL
VELOCITY OF 50, 100, & 150 FPM

SIZE 13 VENT AT 5:00 = 24'-6" 15'-6" 10'
SIZE 13 VENT AT 7:00 = 24'-6" 15'-6" 10'

SECTION 6 - 837 CFM
ISOTHERMAL THROW
BASED ON TERMINAL
VELOCITY OF 50, 100, & 150 FPM

SIZE 13 VENT AT 5:00 = 24'-6" 15'-6" 10'
SIZE 13 VENT AT 7:00 = 24'-6" 15'-6" 10'

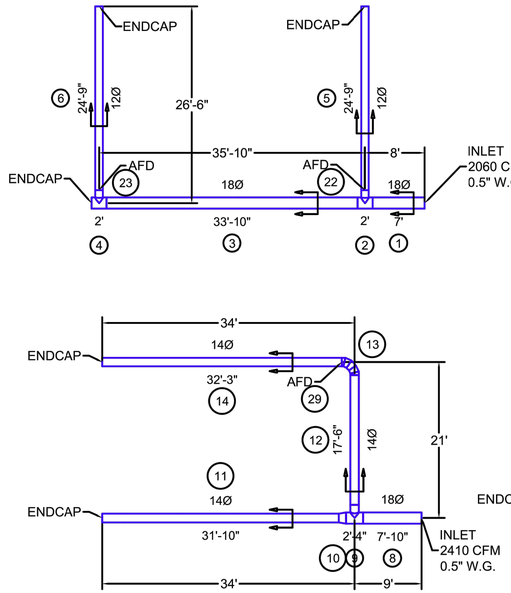

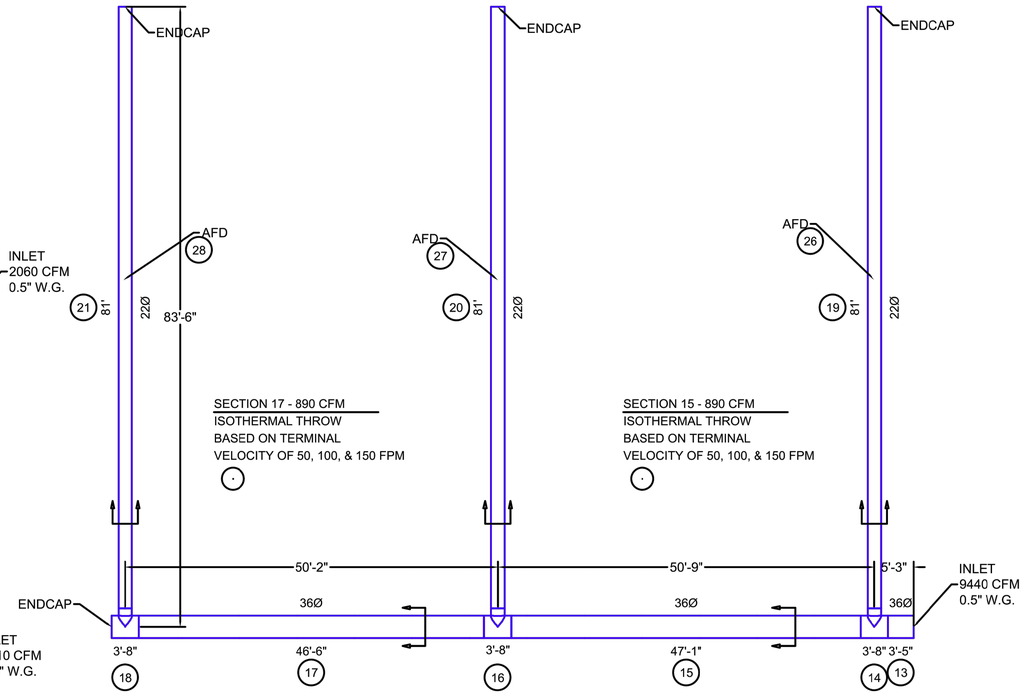

SECTION 17 - 890 CFM
ISOTHERMAL THROW
BASED ON TERMINAL
VELOCITY OF 50, 100, & 150 FPM

SECTION 15 - 890 CFM
ISOTHERMAL THROW
BASED ON TERMINAL
VELOCITY OF 50, 100, & 150 FPM

SECTION 8 - 85 CFM
ISOTHERMAL THROW
BASED ON TERMINAL
VELOCITY OF 50, 100, & 150 FPM

SECTION 11 - 1087 CFM
ISOTHERMAL THROW
BASED ON TERMINAL
VELOCITY OF 50, 100, & 150 FPM

SIZE 12 VENT AT 5:00 = 23' 14'-6" 9'-6"
SIZE 12 VENT AT 7:00 = 23' 14'-6" 9'-6"

SECTION 12 - 150 CFM
ISOTHERMAL THROW
BASED ON TERMINAL
VELOCITY OF 50, 100, & 150 FPM

SECTION 14 - 1088 CFM
ISOTHERMAL THROW
BASED ON TERMINAL
VELOCITY OF 50, 100, & 150 FPM

SIZE 12 VENT AT 5:00 = 23' 14'-6" 9'-6"
SIZE 12 VENT AT 7:00 = 23' 14'-6" 9'-6"

SECTION 21 - 2553 CFM
ISOTHERMAL THROW
BASED ON TERMINAL
VELOCITY OF 50, 100, & 150 FPM

SIZE 11 VENT AT 5:00 = 21'-6" 13'-6" 9'
SIZE 7 VENT AT 7:00 = 15'-6" 10' 6'-6"

SECTION 20 - 2554 CFM
ISOTHERMAL THROW
BASED ON TERMINAL
VELOCITY OF 50, 100, & 150 FPM

SIZE 9 VENT AT 5:00 = 18'-6" 11'-6" 8'
SIZE 9 VENT AT 7:00 = 18'-6" 11'-6" 8'

SECTION 19 - 2553 CFM
ISOTHERMAL THROW
BASED ON TERMINAL
VELOCITY OF 50, 100, & 150 FPM

SIZE 7 VENT AT 5:00 = 15'-6" 10' 6'-6"
SIZE 11 VENT AT 7:00 = 21'-6" 13'-6" 9'

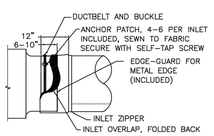

INLET ATTACHMENT DETAIL

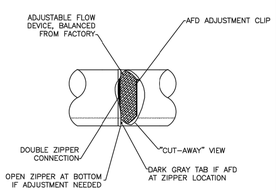

ADJUSTABLE FLOW DEVICE (AFD)

INSTALLED AT ZIPPER LOCATION AT INLET OR AS SPECIFIED IN OTHER LOCATIONS. ZIPPER TO ZIPPER CONNECTION AS SHOWN. EXTERNAL LABEL IDENTIFIES LOCATION

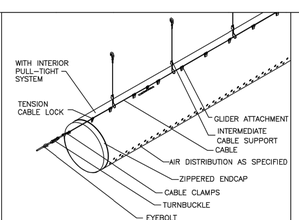

SUSPENSION DETAIL

1 ROW CABLE SUSPENSION AT 12 O'CLOCK
SKELECORE PULL–TIGHT

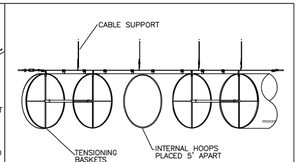

SUSPENSION DETAIL

SKELECORE PULL–TIGHT WITH CABLE SYSTEM DETAIL

DUCT SOX DETAILS – MECHANICAL

SCALE: NONE

8053.00

SHANE HAMILTON, P.E.
#75420

Engineering Professionals, Inc.
CERTIFICATE OF AUTHORIZATION
EB – 0006437
1717 N. Howard Avenue
Tampa, FL 33607 (813) 251–6848

FleischmanGarcia.
ARCHITECTURE · PLANNING · INTERIOR DESIGN
SAINT LOUIS · KANSAS CITY · TAMPA · ORLANDO · MIAMI · NEW YORK
195 FOURTH AVENUE NORTH
NASHVILLE, TENNESSEE 37201–1605
PHONE (777) 726-8080
FAX (777) 726-9000
324 HYDE PARK AVENUE, SUITE 350
TAMPA, FLORIDA 33606
PHONE (813) 251-6400
FAX (813) 251-6848
REGISTRATION NUMBER AA C000123
5967 CATTLEMEN LANE, SUITE 6
SARASOTA, FLORIDA 34232
PHONE (941) 342-0293
FAX (941) 342-0293

NEW TAMPA RECREATION CENTER ADDITION

TAMPA, FL 33647

THE DESIGN AND DRAWING IS THE SOLE PROPERTY OF FLEISCHMAN&GARCIA, INC. AND MAY NOT BE REPRODUCED WITHOUT WRITTEN PERMISSION FROM FLEISCHMAN&GARCIA

I CERTIFY TO THE BEST OF MY KNOWLEDGE THAT THESE DRAWINGS COMPLY WITH ALL RELEVANT BUILDING CODES

FGA PROJECT NUMBER
18015

ISSUE DATE
11/07/18

SHEET NUMBER
M 2.4

Vinod Sharma/Z:\2010_0000\2018_8000\8053\8053-M.dwg
11-12-18

PLUMBING GENERAL NOTES:

- ALL WORK SHALL COMPLY WITH APPLICABLE NATIONAL, STATE, AND LOCAL CODES. THIS SHALL INCLUDE, BUT NOT BE LIMITED TO, THE FLORIDA PLUMBING CODE, 6TH EDITION.
- REVIEW PLANS OF ALL TRADES PRIOR TO BIDDING AND INSTALLATION TO INCLUDE ALL PLUMBING FOR COMPLETE SYSTEMS SHOWN ON THE PLANS AND AS REQUIRED.
- COORDINATE WITH OTHER TRADES TO PREVENT INTERFERENCE WITH HVAC DUCTS, STRUCTURE, ELECTRICAL LIGHTING, AND OTHER PIPING IN THE CEILING SPACE. VENT PIPING AND WATER PIPING SHALL BE HELD EITHER ABOVE OR BELOW HVAC DUCTWORK AS COORDINATED WITH THE HVAC CONTRACTOR.
- ALL CHANGES SHALL BE APPROVED BY THE ARCHITECT.
- COORDINATE WITH ARCHITECTURAL DRAWINGS BEFORE ROUGHING–IN PLUMBING FIXTURES AND EQUIPMENT SUPPLIES.
- THE PLUMBING SUBCONTRACTOR SHALL FURNISH AND INSTALL ALL PLUMBING FIXTURES, UNLESS NOTED OTHERWISE.
- THE PLUMBING SUBCONTRACTOR SHALL INSTALL AND MAKE ALL PLUMBING CONNECTIONS TO OWNER FURNISHED EQUIPMENT.
- VERIFY MOUNTING HEIGHT AND WATER CONNECTION SIZES TO ALL PLUMBING FIXTURES PRIOR TO ROUGH–IN. FURNISH CUT–OUT TEMPLATES, FOR PLUMBING FIXTURES TO BE INSTALLED IN MILLWORK, TO THE GENERAL CONTRACTOR.
- MAKE PROPER HOT AND COLD WATER, WASTE AND VENT PIPING CONNECTIONS TO ALL FIXTURES AND EQUIPMENT EVEN THOUGH ALL FITTINGS AND CONNECTIONS ARE NOT SHOWN.
- VERIFY LOCATION OF EXISTING WATER SERVICE AND THE LOCATION/INVERTS OF SANITARY PIPING PRIOR TO INSTALLATION.
- THIS CONTRACTOR TO DO ALL CUTTING AND PATCHING REQUIRED TO INSTALL ANY PORTION OF THIS WORK. PATCH WITH NEW MATERIALS OF THE SAME TYPE THAT WAS REMOVED. REFINISH PATCHED SURFACE TO MATCH EXISTING ADJACENT SURFACES.
- ALL PLUMBING VENTS IN EXTERIOR WALLS SHALL BE OFFSET A MINIMUM OF 3'–0" BEFORE ROOF PENETRATION.
- PROVIDE TRAP PRIMERS FOR FLOOR DRAINS, FROM THE NEAREST LAVATORY, AS SHOWN ON THE PLAN AND AS REQUIRED BY LOCAL CODE. PRIMERS SHALL BE LOCATED IN A SERVICEABLE LOCATION AND INSTALLED PER MANUFACTURERS INSTALLATION INSTRUCTIONS.
- INSTALL WATER HAMMER ARRESTERS WHERE WATER PRESSURES ARE EXCESSIVE OR WHERE REQUIRED TO ELIMINATE WATER HAMMER OR WHEN DEEMED NECESSARY BY LOCAL AUTHORITIES. LOCATE AND SIZE AS RECOMMENDED BY THE AMERICAN SOCIETY OF PLUMBING ENGINEERS.
- ALL WORK ASSOCIATED WITH THESE PLANS SHALL NOT PASS THRU OR ABOVE ANY ROOM DESIGNATED AS AN ELECTRICAL ROOM.
- IT IS IN THE INTENT OF THESE DRAWINGS TO COVER ALL WORK AND MATERIAL FOR A FIRST CLASS INSTALLATION. ANY EQUIPMENT, PLUMBING FIXTURE, TRIM HARDWARE AND/OR DEVICES USUALLY UTILIZED IN THE CLASS OF WORK, THOUGH NOT SPECIFICALLY MENTIONED OR SHOWN ON THESE DRAWINGS, BUT WHICH MAY BE NECESSARY FOR THE SATISFACTORY COMPLETION OF THE WORK (AS DETERMINED BY THE ARCHITECT) SHALL BE FURNISHED AND INSTALLED BY THE CONTRACTOR AS PART OF HIS TOTAL WORK.
- ALL WORK, BOTH MATERIAL AND INSTALLATION, SHALL BE GUARANTEED FOR A PERIOD OF ONE YEAR FROM DATE OF ACCEPTANCE BY THE OWNER.

MATERIAL SPECIFICATIONS:

1. DOMESTIC HOT AND COLD WATER PIPING TYPE "L" COPPER WITH LEAD FREE SOLDER ABOVE GROUND.
2. SANITARY WASTE AND VENT PIPING SHALL BE DWV SCHEDULE 40 PVC ABOVE AND BELOW GRADE.
3. INSULATION SHALL BE FLEXIBLE UNICELLULAR–SELF–SEAL ARMAFLEX AP 1½" THICK FOR HOT WATER PIPING UP TO 1½" SIZE–PROVIDE SHEET METAL SADDLES AT EACH HANGER.

PLUMBING LEGEND

DESCRIPTION	ABBREV.	SYMBOL
SANITARY PIPING	SAN	
VENT PIPING	V	
COLD WATER PIPING	CW	
HOT WATER PIPING	HW	
TRAP PRIMER PIPING	TPP	— — —TPP— — —
STORM WATER PIPING	ST	———ST———
OVERFLOW STORM WATER PIPING	OST	———OST———
EXISTING PIPING TO REMAIN		
EXISTING PIPING TO BE REMOVED		
GATE VALVE	GV	
CHECK VALVE	CV	
UNION		
TRAP PRIMER	TP	TP
CLEAN OUT	CO	
CLEAN OUT TO GRADE	COTG	
WALL CLEAN OUT	WCO	WCO
FLOOR CLEAN OUT	FCO	FCO
FLOOR DRAIN	FD	
TYPICAL	(TYP)	
NEW CONNECTION TO EXISTING		
WALL HYDRANT	WH	WH
VENT THRU ROOF	VTR	
NEW	(N)	
EXISTING	(E)	
BALANCING VALVE	BV	
HOT WATER RETURN PIPING	HWR	

PLUMBING FIXTURE SCHEDULE

WC: WATER CLOSET, BARRIER FREE – AMERICAN STANDARD MADERA NO. 3043.102 FLOOR MOUNTED, 17" HIGH, VITREOUS CHINA, ELONGATED, 1–1/2" TOP SPUD. ZURN ELECTRIC SENSOR FLUSH VALVE NO. Z–ZERK–CPM RETRO FIT KIT 0242. BATTERY POWERED. (POSITION OF SENSOR BOX CAN BE RAISED OR LOWERED 1" IF IN CONFLICT WITH HANDICAP GRAP BARS). AMERICAN STANDARD TOILET SEAT NO. 5901.10055.020 OPEN FRONT SEAT LESS COVER, STAINLESS STEEL SELF SUSTAINING CHECK HINGE. 1" CW, 2" VENT, 4" SAN.

LAV: LAVATORY, BARRIER FREE – AMERICAN STANDARD LUCERNE NO. 0356.421, 20x18" VITREOUS CHINA, WALL HUNG, 4" CENTERS. PROVIDE FLOOR CARRIER WITH CONCEALED ARMS. FAUCET – EQUAL TO HYDROTEK 5000EM SERIES ELECTRONIC LAVATORY FAUCET MODEL H–5000 EM–LR WITH HC010. SENSOR OPERATED, HARDWIRED AC, 120V, 0.5 GPM FLOW RESTRICTOR, GRID DRAIN ASSEMBLY. TOP OF FRONT RIM MOUNTED 34" FROM FINISHED FLOOR. PROVIDE STOPS, SUPPLIES, TRAP, ETC., TO MAKE A COMPLETE INSTALLATION. INSULATE TRAP AND SUPPLIES WITH TRUEBRO NO. 103 LAV GUARD. 1/2" CW, 1/2" HW, 2" VENT, 2" SAN.

WCO: WALL CLEAN–OUT – ZURN, #Z–1441, SMOOTH STAINLESS STEEL ACCESS COVER, DURA–COATED CAST IRON BODY. MATCH TO PIPE SIZE.

FCO: FLOOR CLEANOUT – ZURN NO. Z–1444, POLISHED BRONZE ACCESS COVER, DURA–COATED CAST IRON BODY. MATCH TO PIPE SIZE.

FD: FLOOR DRAIN – ZURN Z–415–P WITH "TYPE B" ADJUSTABLE STRAINER TOP WITH SQUARE HEELPROOF OPENINGS AND SECURED GRATE. DURA COATED CAST IRON BODY WITH TRAP PRIMER CONNECTION. SIZE TO PIPE SIZE.

TP: TRAP PRIMER – ZURN Z–1022 SANI–GARD. CONNECT TO CW W/VALVE, EXTEND TPP TO FLOOR DRAIN AS REQUIRED. 1/2" CW

RD–1: ROOF DRAIN – ZURN Z–187 OBLIQUE SCUPPER. DURA–COATED CAST IRON BODY WITH REVERSIBLE BACK OR BOTTOM OUTLET, OBLIQUE ALUMINUM GRATE WITH 90° COMBINATION FRAME AND MEMBRANE FLASHING CLAMP. PROVIDE EXTENSION AS REQUIRED. SIZE TO PIPE SIZE.

RD–2: ROOF DRAIN – ZURN Z–103 15" DIAMETER DEEP SUMP DUAL OUTLET ROOF DRAIN W/ LOW SILHOUETTE DOME. DURA–COATED CAST IRON BODY WITH COMBINATION MEMBRANE FLASHING CLAMP/GRAVEL GUARD, OVERFLOW PIPE AND LOW SILHOUETTE CAST IRON DOME. PROVIDE EXTENSION AS REQUIRED. SIZE TO PIPE SIZE.

ORD–1: OVERFLOW ROOF DRAIN – ZURN Z–122–HD 12" DECK RECEPTOR DRAIN, DURA–COATED CAST IRON BODY WITH COMBINATION MEMBRANE FLASHING CLAMP/DECK RECEPTOR FRAME AND INTERNAL HIGH DOME STRAINER. PROVIDE EXTENSION AS REQUIRED. SIZE TO PIPE SIZE.

WH: WALL HYDRANT, INSIDE OR MODERATE CLIMATE – ZURN NO. Z–1335, ENCASED FLUSH WALL HYDRANT, NICKEL BRONZE BOX AND HINGED COVER WITH OPERATING KEY LOCK AND "WATER" CAST ON COVER. 3/4" CW

EWH: ELECTRIC WATER HEATER – RHEEM, MODEL ELDS30, 30 GALLON, 4.5K NON–SIMULTANEOUS DUAL ELEMENTS, 208 VOLT, SINGLE PHASE. HEAT TRAPS, EXPANSION TANK AND CODE APPROVED DRAIN PAN. SEE DETAIL. 3/4" CW, 3/4" T&P, 1" DRAIN PAN DRAIN PIPING

RP: CIRCULATOR PUMP – BELL & GOSSETT NO. 102210 W/HV IB BOOSTER PUMP. CAST BODY, 1/6 HP, 115 V. 1.9 F.L. AMPS, PROVIDE AQUASTAT. 7–DAY TIMECLOCK INTERMATIC NO. ET8015C, 30–AMPS SPST ELECTRONIC ASTRONOMIC TIME SWITCH, CLOCK VOLTAGE 120–VOLT – 277–VOLT NEMA 1. MOUNT PUMP IN LINE WITH SUPPORTS TO STRUCTURE. PROVIDE VIBRATION ISOLATION.

TMV: PROVIDE ASSE 1070 APPROVED WATTS MODEL LFMMV. SET TO 110°. INSTALL UNDER LAVATORIES.

EWC: ELECTRIC WATER COOLER–TWO–LEVEL – ELKAY VRCTL8WSK, VANDAL RESISTANT EZH20 BOTTLE FILLING STATION, WALL MOUNT. STAINLESS STEEL BASINS, VANDAL RESISTANT BUBBLER. 115V, 8.0 GPH, 370 WATTS, 5.0 FLA. MOUNT ONE AT 40–3/4" ORIFICE HEIGHT AND ONE AT 35–3/8" ORIFICE HEIGHT. CONNECT WATER SUPPLY AND WASTE LINES FROM FOUNTAIN UNIT TO COOLER UNIT. PROVIDE FLOOR CARRIERS, STOP, SUPPLY, TRAP, ETC., TO MAKE A COMPLETE INSTALLATION. 1/2" CW, 2" VENT, 2" SAN.

DNZ: DOWNSPOUT NOZZLE – ZURN MODEL Z199 OR EQUIVALENT. SIZE TO PIPE SIZE.

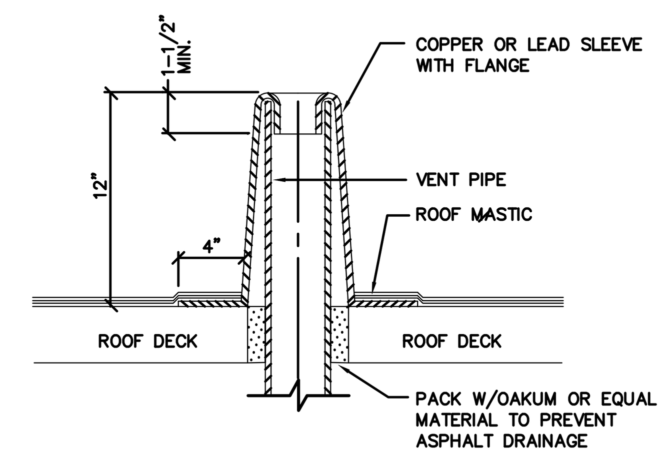

VENT THRU ROOF DETAIL
NO SCALE

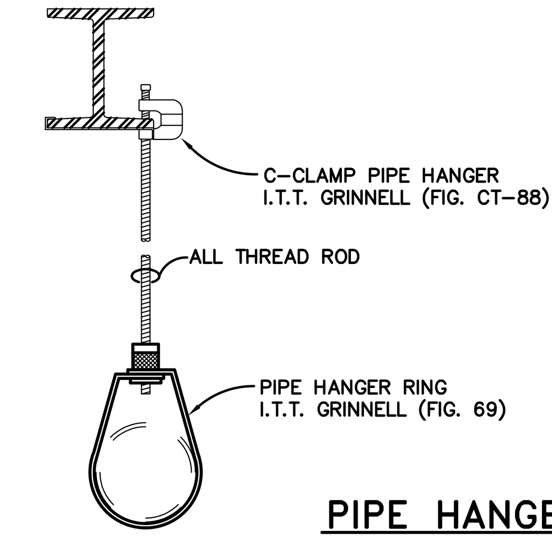

PIPE SIZE (IN)	ROD SIZE (IN)	MAX SPACE (FT)
1/2	1/4	5
3/4	1/4	6
1	1/4	7
1–1/2	3/8	9
2	3/8	10
2–1/2	3/8	11
3	3/8	12
4	1/2	14

PIPE HANGER DETAIL
NO SCALE U.L./F.M. APPROVED

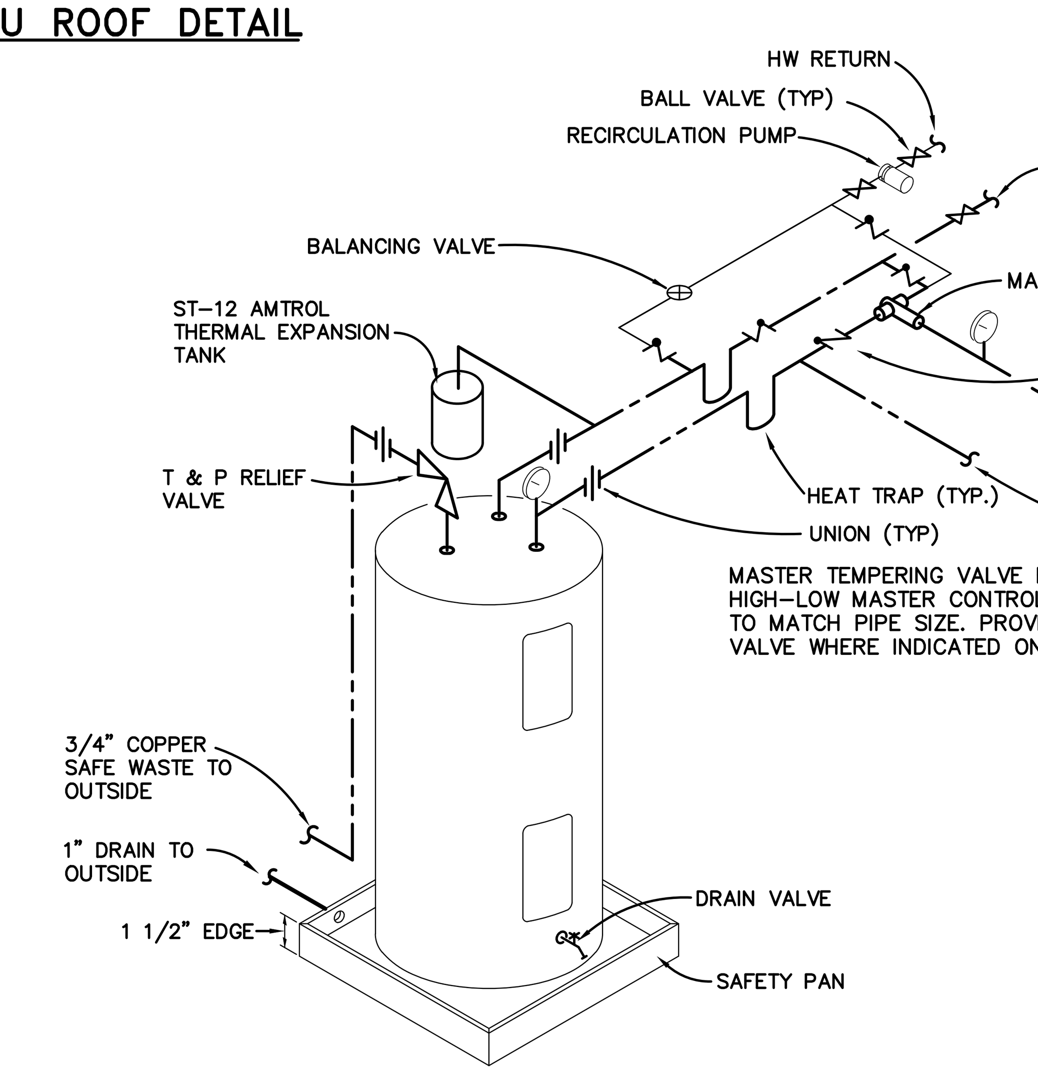

MASTER TEMPERING VALVE EQUAL TO LAWLER SERIES 800 HIGH–LOW MASTER CONTROLLER, ASSE 1017 APPROVED. SIZE TO MATCH PIPE SIZE. PROVIDE ASSE 1070 APPROVED MIXING VALVE WHERE INDICATED ON FLOOR PLANS

WATER HEATER PIPING DETAIL
NO SCALE

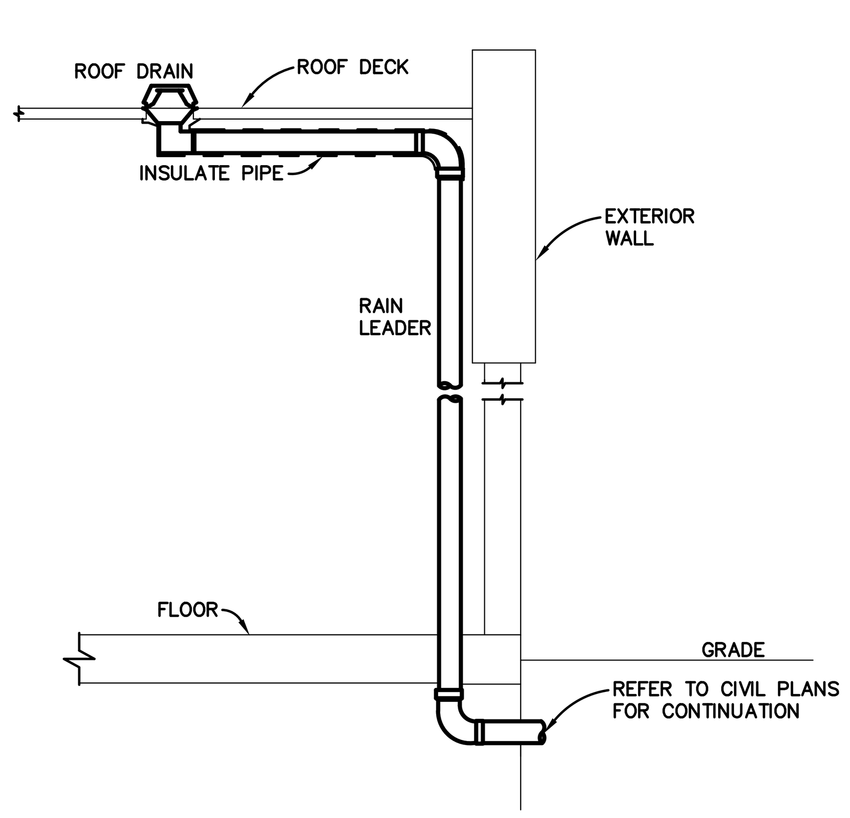

RAIN LEADER DETAIL
NO SCALE

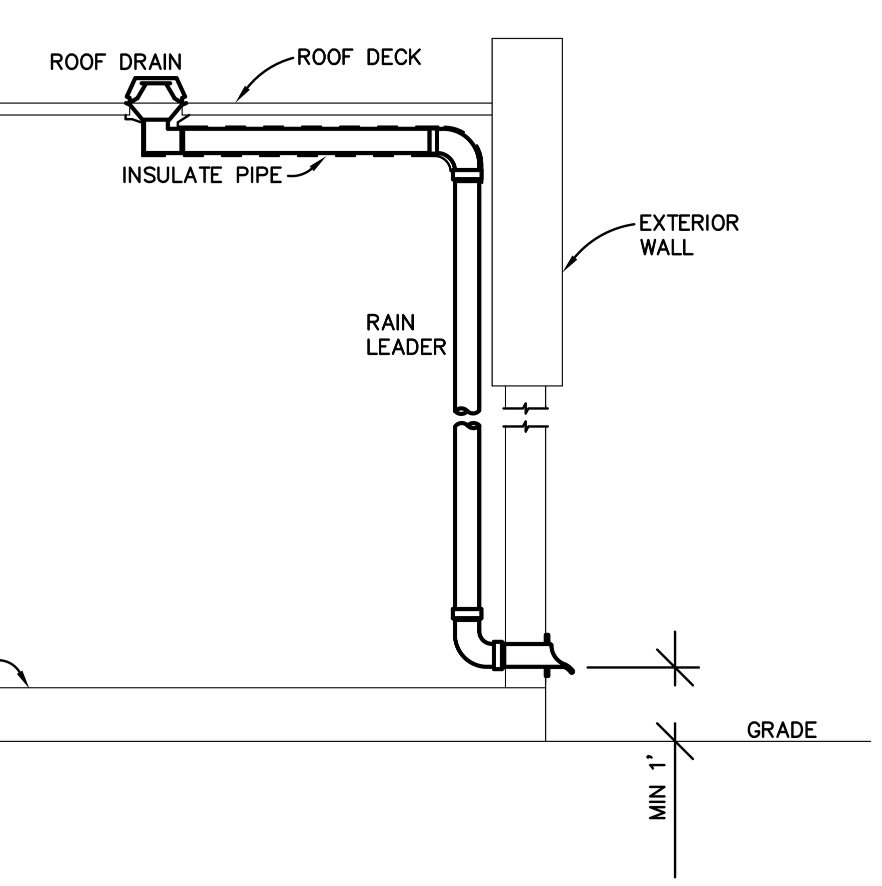

SECONDARY RAIN LEADER DETAIL
NO SCALE

NOTES

1. DOWNSPOUT NOZZLES TO BE USED IN SECONDARY/OVERFLOW DRAINAGE SYSTEMS ONLY.
2. COORDINATE DOWNSPOUT LOCATIONS WITH SITE PLANS.

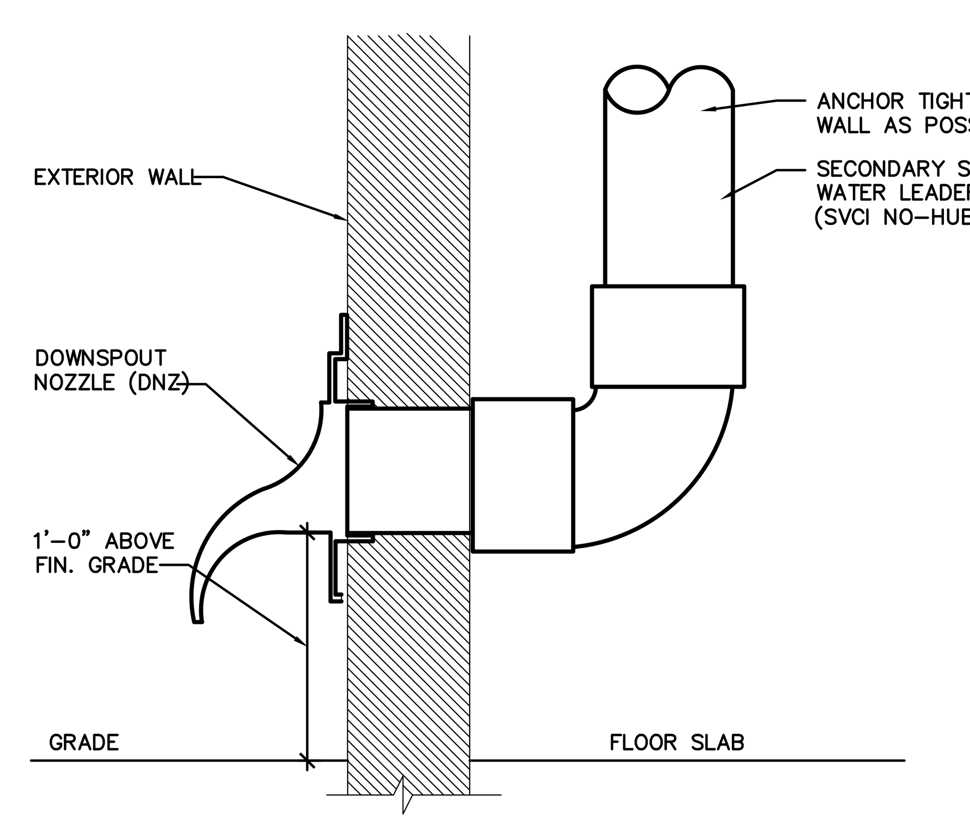

SECONDARY DOWNSPOUT NOZZLE
NO SCALE

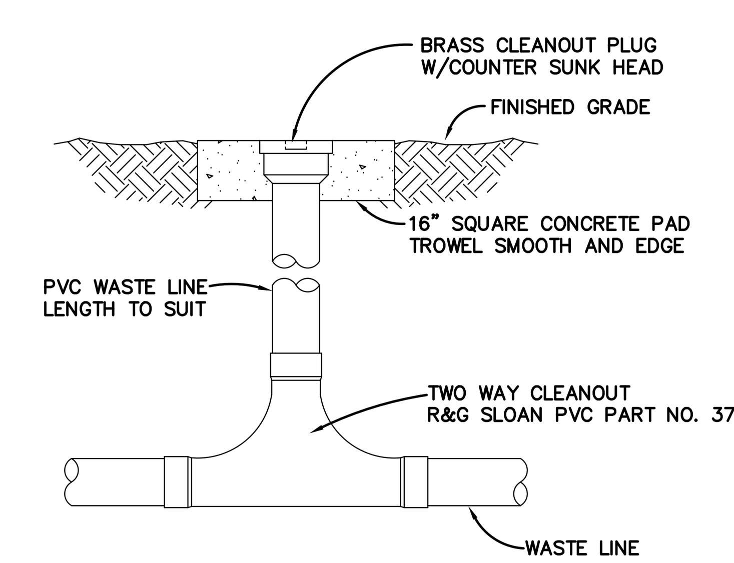

2–WAY CLEANOUT DETAIL
NO SCALE

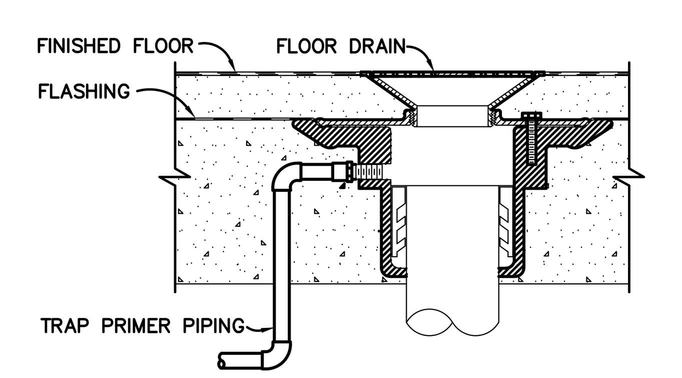

TRAP PRIMER CONNECTION DETAIL
NO SCALE

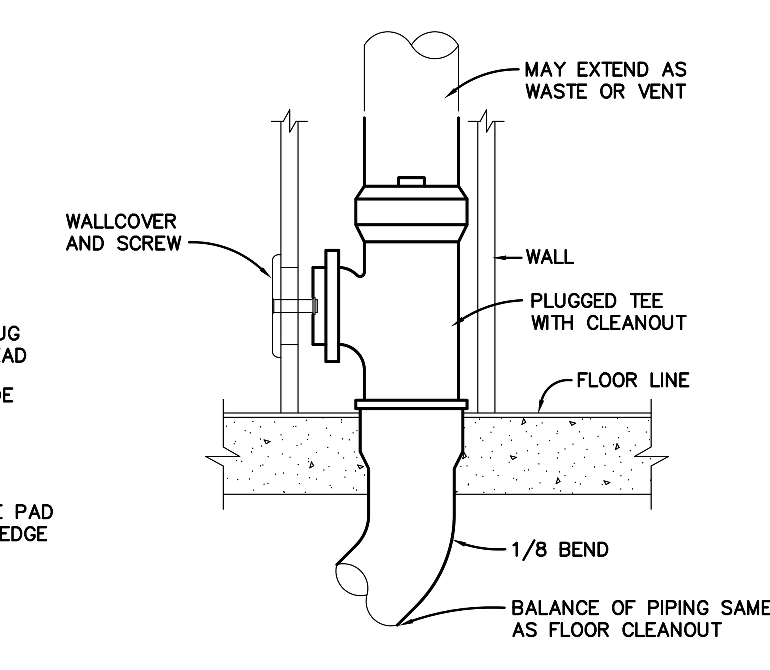

WALL CLEANOUT DETAIL
NO SCALE

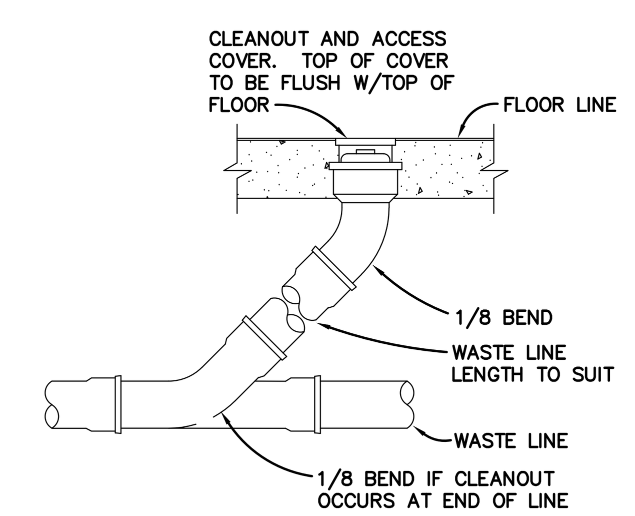

FLOOR CLEANOUT DETAIL
NO SCALE

SHANE HAMILTON, P.E.
#75420

Engineering Professionals, Inc.
Mechanical Engineers
EB–0006437
1717 N. Howard Avenue
Tampa, FL 33607 (813) 251–6848

FleischmanGarcia
ARCHITECTURE • PLANNING • INTERIOR DESIGN
SAFETY HARBOR OFFICE
195 FOURTH AVENUE NORTH
SAFETY HARBOR, FLORIDA 34695
PHONE (727) 725-8880
FAX (727) 725-3900
TAMPA OFFICE
324 HYDE PARK AVENUE, SUITE 300
TAMPA, FLORIDA 33606
PHONE (813) 251-4400
FAX (813) 251-1994
SARASOTA OFFICE
5967 CATTLEMEN LANE, SUITE 6
SARASOTA, FLORIDA 34232
PHONE (941) 342-9293
FAX (941) 342-9253
REGISTRATION NUMBER AA C000123

NEW TAMPA RECREATION CENTER ADDITION
TAMPA, FL 33647

THIS DESIGN AND DRAWING IS THE SOLE PROPERTY OF FLEISCHMANGARCIA. NO PART OF THIS WORK MAY BE REPRODUCED WITHOUT PRIOR WRITTEN PERMISSION FROM FLEISCHMANGARCIA.

I CERTIFY TO THE BEST OF MY KNOWLEDGE THAT THESE DRAWINGS COMPLY W/ ALL RELEVANT BUILDING CODES

FGA PROJECT NUMBER
18015

ISSUE DATE
11/07/18

SHEET NUMBER
P0.0

11-12-18 Corderro Costa \\ANA2\Server\2010_0000\2018_8000\8053\8053-P.dwg

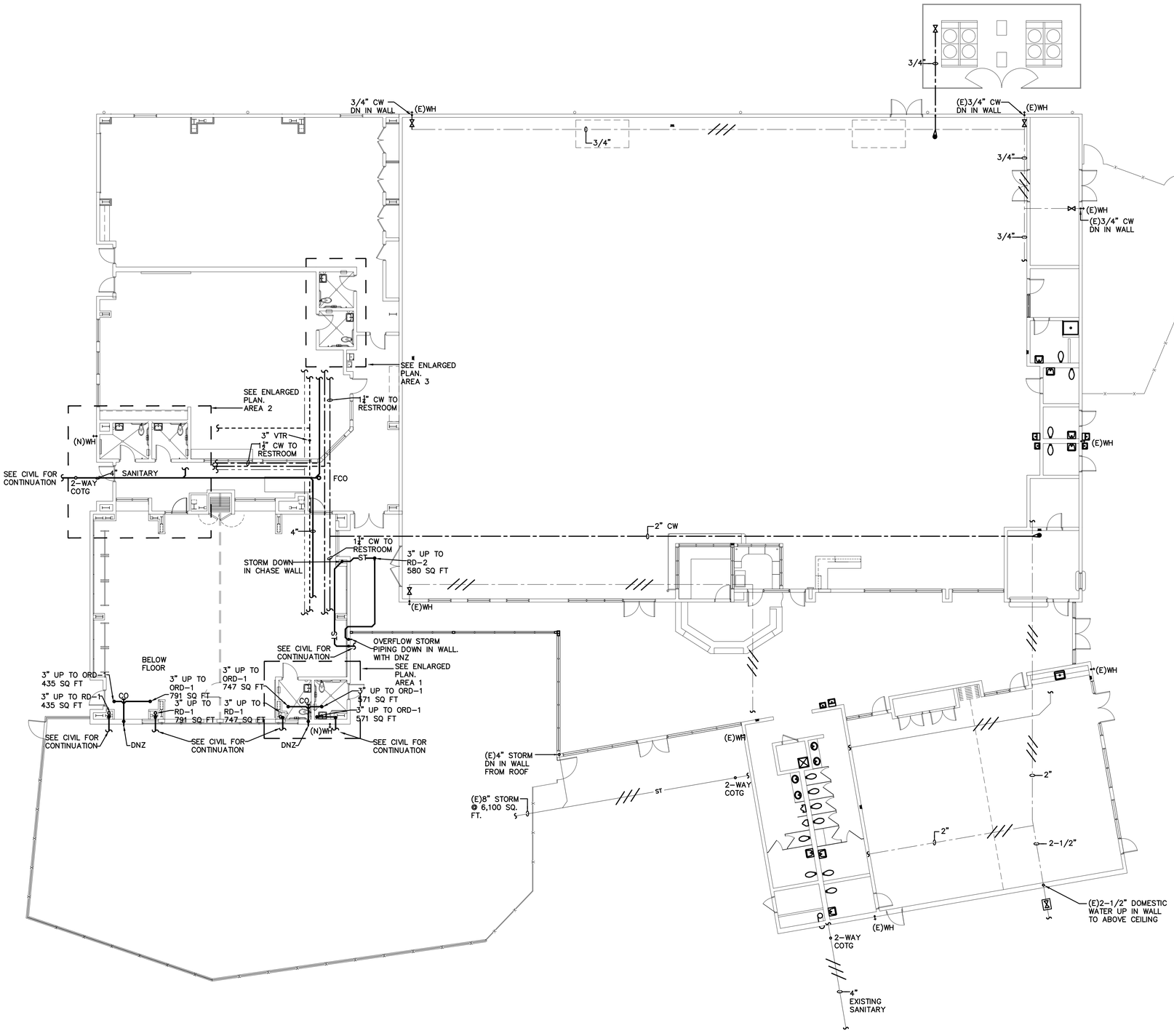

FLOOR PLAN – PLUMBING

SCALE: 3/32"=1'-0" 8053.00

SHANE HAMILTON, P.E. #75420

Engineering Professionals, Inc.
Mechanical • Electrical • Plumbing
EB-0006437
1717 N. Howard Avenue
Tampa, FL 33607 (813) 251-6848

FleischmanGarcia.
ARCHITECTURE • PLANNING • INTERIOR DESIGN
SAINT LOUIS OFFICE
705 FOURTH AVENUE NORTH
SAINT LOUIS PARK, MINNESOTA 55426
PHONE (777) 726-8080
FAX (777) 726-9066
AMPHITHEATER OFFICE
324 HYDE PARK AVENUE, SUITE 300
AMPHITHEATER, NEW YORK 11717
PHONE (631) 217-4400
FAX (631) 217-4444
ORLANDO OFFICE
5967 CATTLEMEN LANE, SUITE 6
ORLANDO, FLORIDA 32822
PHONE (941) 342-0293
FAX (941) 342-0253
REGISTRATION NUMBER AA C000123

NEW TAMPA RECREATION CENTER ADDITION

TAMPA, FL 33647

THE DESIGN AND DRAWING IS THE SOLE PROPERTY OF FLEISCHMANGARCIA. NO PART OF THIS WORK MAY BE REPRODUCED WITHOUT PRIOR WRITTEN PERMISSION FROM FLEISCHMANGARCIA.

I CERTIFY TO THE BEST OF MY KNOWLEDGE THAT THESE DRAWINGS COMPLY W/ ALL RELEVANT BUILDING CODES

FGA PROJECT NUMBER
18015

ISSUE DATE
11/07/18

SHEET NUMBER
P1.0

11-12-18 Cordemo Codig\ANA2Server2015_0002\018_B0008503\B0003-P.dwg

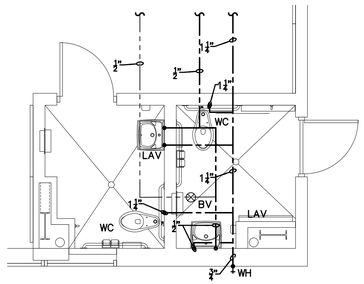

AREA 1

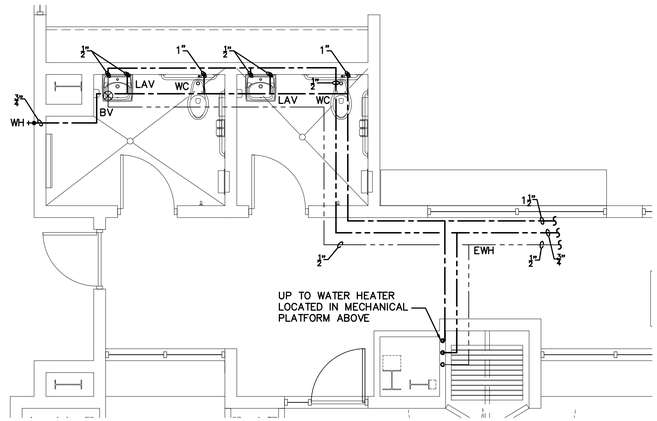

AREA 2

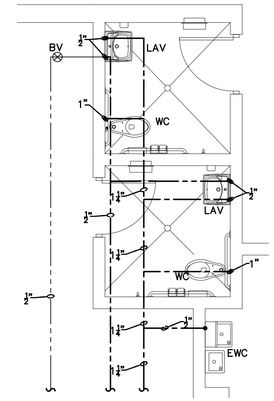

AREA 3

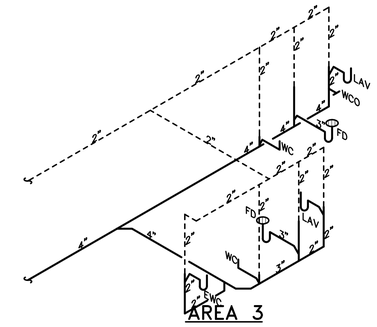

AREA 3

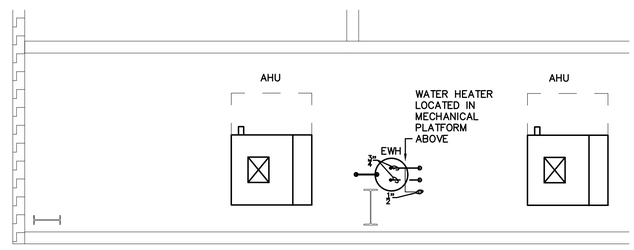

MECHANICAL PLATFORM

ENLARGED FLOOR PLANS – WATER

SCALE: 1/4"=1'-0"

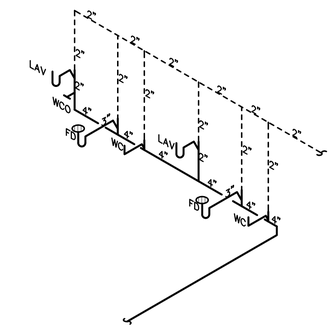

AREA 2

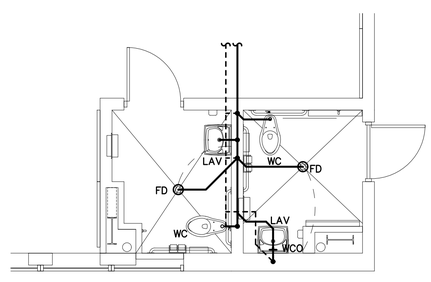

AREA 1

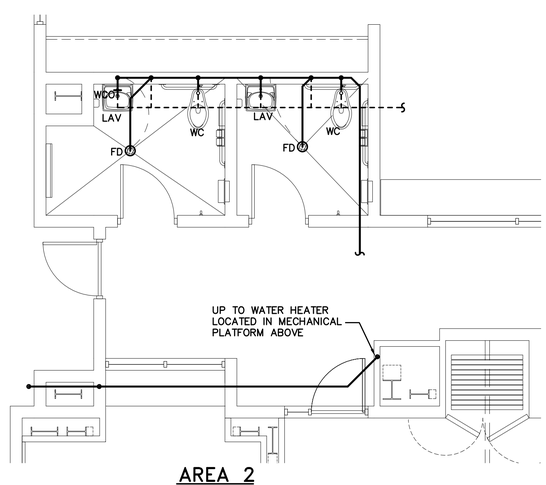

AREA 2

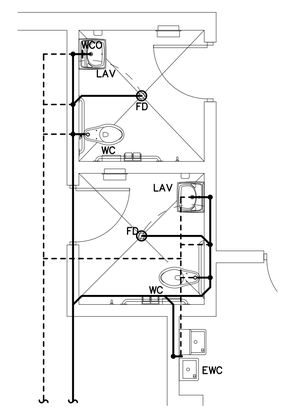

AREA 3

ENLARGED FLOOR PLANS – WASTE & VENT

SCALE: 1/4"=1'-0"

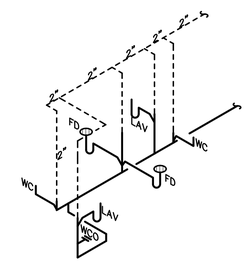

AREA 1

SANITARY RISER DIAGRAM

NOT TO SCALE

SHANE HAMILTON, P.E.
#75420

Engineering Professionals, Inc.
CERTIFICATE OF AUTHORIZATION
EB-0006437
1717 N. Howard Avenue
Tampa, FL 33607 (813) 251-6848

FleischmanGarcia.
ARCHITECTURE • PLANNING • INTERIOR DESIGN
SAINT PETERSBURG OFFICE
535 FOURTH AVENUE NORTH
SAINT PETERSBURG, FLORIDA 33705
PHONE (727) 726-8080
FAX (727) 726-9066
TAMPA OFFICE
3234 HYDE PARK AVENUE, SUITE 300
TAMPA, FLORIDA 33629-5802
PHONE (813) 251-6600
FAX (813) 251-6601
ORLANDO OFFICE
5969 CATTLEMEN LANE, SUITE 6
ORLANDO, FLORIDA 32822
PHONE (941) 342-0293
FAX (941) 342-0253
REGISTRATION NUMBER AA C000123

NEW TAMPA RECREATION CENTER ADDITION

TAMPA, FL 33647

THE DESIGN AND DRAWING IS THE SOLE PROPERTY OF FLEISCHMAN/GARCIA, INC. PARTS OF THIS WORK MAY NOT BE REPRODUCED WITHOUT PRIOR WRITTEN PERMISSION FROM FLEISCHMAN/GARCIA, INC.

I CERTIFY TO THE BEST OF MY KNOWLEDGE THAT THESE DRAWINGS COMPLY WITH ALL RELEVANT BUILDING CODES

FGA PROJECT NUMBER
18015

ISSUE DATE
11/07/18

SHEET NUMBER
P2.0

11-12-18 Cordero Cost@AN/AZ/Server/2016_0000/2016_8000/8023/8050-P.dwg

COMPLIANCE NOTES

FLORIDA ADMINISTRATIVE CODE: 61G15-32.004

SCOPE OF WORK

EXTENSION OF EXISTING AUTOMATIC FIRE PROTECTION SYSTEM INTO BUILDING ADDITION DESIGNED IN COMPLIANCE WITH THE APPLICABLE NFPA STANDARDS LISTED WITHIN THESE DOCUMENTS.

ACCEPTANCE TEST CRITERIA

SHALL COMPLY WITH NFPA-13. SPRINKLER SYSTEM SHALL BE PROPERLY INSPECTED AND MAINTAINED IN ACCORDANCE WITH NFPA-25 STANDARD FOR INSPECTION, TESTING, AND MAINTENANCE OF WATER BASED SYSTEM.

HAZARD CLASSIFICATION

CLASSIFICATION: LIGHT HAZARD.

APPLICABLE NFPA STANDARDS TO BE APPLIED

FLORIDA BUILDING CODE (6TH EDITION)
FLORIDA FIRE PREVENTION CODE (6TH EDITION)
NFPA 13
NFPA 14
NFPA 20
NFPA 24
NFPA 25

STRUCTURAL SUPPORT AND STRUCTURAL OPENINGS

THE STRUCTURAL ENGINEER OF RECORD HAS ADVISED THE UNDERSIGNED THAT THERE IS A LIVE AND DEAD LOAD ALLOWANCE FOR FIRE PROTECTION SYSTEM RUNNING IN THE CEILING OF THE STRUCTURE. REFER TO STRUCTURAL FOR FURTHER INFORMATION.

FIRE ALARM SYSTEM

REFER TO ELECTRICAL DOCUMENTS FOR ALARMING REQUIREMENTS.

POINT OF SERVICE

CITY MAIN FEEDING EXISTING BACKFLOW PREVENTER (BY CIVIL DIVISION). REFER TO SITE PLAN FOR LOCATION.

CLASSIFICATION OF HAZARD OCCUPANCY FOR EACH ROOM OR AREA

LIGHT HAZARD: ALL TOILETS, OFFICE SPACES, CONFERENCE ROOMS, LOBBY, CORRIDORS, LOUNGE, VESTIBULES AND OTHER LIKE AREAS.

DESIGN APPROACH

LIGHT HAZARD

SPRINKLER SYSTEM TO BE ATTACHED TO SPRINKLER RISER. SYSTEM SHALL BE EXTENDED INTO ENTIRE BUILDING IN ACCORDANCE WITH NFPA-13, U.L., LIGHT HAZARD. LISTED AND APPROVED UPRIGHT, SIDEWALL & PENDANT (K-FACTOR AS NOTED) SPRINKLERS TO BE USED. SPRINKLERS SHALL BE RATED AS NOTED IN MATERIAL SPECIFICATION (THIS SHEET) UNLESS OTHERWISE NOTED. MAXIMUM SPRINKLER SPACING SHALL NOT EXCEED LISTING WITH A 0.10 DENSITY SPRINKLER. CONTRACTOR SHALL PROVIDE HYDRAULIC CALCULATION.

CHARACTERISTICS OF THE WATER SUPPLY TO BE USED

STREET MAIN IS CIRCULATING. MINIMUM DURATION OF 60-90 MINUTES.

FLOW TEST DATA:

SEE FLOW TEST DATA THIS SHEET.

VALVING AND ALARM REQUIREMENTS TO MINIMIZE POTENTIAL FOR IMPAIRMENTS AND UNRECOGNIZED FLOW OF WATER:

THE FIRE SUPPRESSION SYSTEM FOR THIS FACILITY IS SUPERVISED AND REPORTS SYSTEM STATUS (WATER FLOW, TAMPER SWITCHES, PRESSURE SWITCHES, ETC) TO A MONITORED ALARM PANEL.

THE BACKFLOW PREVENTION DEVICE IS EXISTING WITH AND SHALL HAVE TAMPER SWITCHES AND CHAINED AND LOCKED IN THE OPEN POSITION.

MICROBIAL INDUCED CORROSION (MIC)

WATER SOURCE IS FROM EXISTING PUBLIC UTILITY WATER MAIN. THERE ARE NO KNOWN CONDITIONS PRESENT THAT CONTRIBUTE TO MICROBIOLOGICAL CORROSION (M.I.C.). CONTRACTOR SHALL REEVALUATE WATER SUPPLY AND ENVIRONMENTAL CONDITIONS FOR EXISTENCE OF MICROBES AND CONDITIONS THAT CONTRIBUTE TO M.I.C. PRIOR TO START OF CONSTRUCTION. WHERE CONDITIONS ARE FOUND THAT CONTRIBUTE TO M.I.C. THE CONTRACTOR SHALL NOTIFY OWNER AND ENGINEER.

BACKFLOW PREVENTION AND METERING SPECIFICATIONS

THE BACKFLOW PREVENTION DEVICE ASSEMBLY AND METERING EQUIPMENT IS EXISTING AND SHALL MEET THE REQUIREMENTS OF THE LOCAL WATER PURVEYOR. THE MAXIMUM PRESSURE LOSS SHOULD NOT EXCEED 10 P.S.I. MAXIMUM WORKING PRESSURE 175 P.S.I.

QUALITY AND PERFORMANCE SPECIFICATIONS OF ALL YARD AND INTERIOR FIRE PROTECTION COMPONENTS

ALL NEW YARD AND INTERIOR FIRE PROTECTION EQUIPMENT SHALL BE UL LISTED AND/OR FM APPROVED.

FIRE PUMP REQUIREMENT

THERE IS AN ADEQUATE WATER SUPPLY SERVING FIRE PROTECTION SYSTEM. NO FIRE PUMP IS ANTICIPATED.

WATER STORAGE TANK REQUIREMENT

THERE IS AN ADEQUATE WATER SUPPLY SERVING FIRE PROTECTION SYSTEM. NO WATER STORAGE TANK IS REQUIRED.

OWNER'S CERTIFICATE FOR STORAGE FACILITIES

PROPERTY IS NOT A STORAGE OCCUPANCY. OWNER'S CERTIFICATE IS NOT REQUIRED.

GENERAL NOTES

1. FIRE PROTECTION SYSTEM TO COMPLY WITH NFPA 13 AND STATE FIRE PREVENTION CODE.
2. FINAL INSPECTION AND APPROVAL BY THE AUTHORITY HAVING JURISDICTION.
3. CONTRACTOR TO SUBMIT A SET OF WORKING PLANS AS DEFINED IN NFPA-13, INCLUDING HYDRAULIC CALCULATIONS, TO ENGINEER FOR REVIEW PRIOR TO SUBMITTING WORKING PLANS TO AUTHORITY HAVING JURISDICTION FOR FINAL APPROVAL.
4. ALL MATERIAL SHALL BE OF APPROVED QUALITY AND THE WORK SHALL BE DONE IN A THOROUGH AND WORKMANLIKE MANNER. THE WORK, MATERIALS AND TEST SHALL BE IN ACCORDANCE WITH ALL APPLICABLE NFPA REQUIREMENTS.
6. PIPE ROUTING SHOWN IS SCHEMATIC ONLY. IT IS THE RESPONSIBILITY OF THIS CONTRACTOR TO PROVIDE ANY ADDITIONAL OFFSETS, SPRINKLERS, ETC. REQUIRED FOR A COMPLETE AND NFPA COMPLIANT INSTALLATION. CONTRACTOR SHALL COORDINATE WITH OTHER TRADES AND BUILDING STRUCTURE TO ENSURE SPRINKLER OPERATION IS NOT OBSTRUCTED AND SPACING IS MAINTAINED PER NFPA-13.
7. PIPING IN AREAS WITH EXPOSED STRUCTURE SHALL BE INSTALLED AS HIGH AS POSSIBLE TO ALLOW THE OWNER MAXIMUM USE OF THE SPACE.
8. REFER TO ARCHITECTURAL REFLECTED CEILING PLANS FOR CEILING DESCRIPTIONS AND HEIGHTS.
9. SPRINKLERS ARE TO BE COORDINATED WITH ALL DIFFUSERS, SPEAKERS, LIGHTING FIXTURES AND CEILING SYSTEMS. SPACING OF SPRINKLERS SHALL BE IN ACCORDANCE WITH NFPA-13 AND THE LISTING OF THE SPRINKLER.
10. SPRINKLER LOCATIONS SHALL BE CENTERED OR INSTALLED IN THE TILE AS INDICATED ON THE DRAWINGS AND SHALL BE INSTALLED USING VICFLEX FLEXIBLE SPRINKLER CONNECTION.
11. PER NFPA-13: 8.6.4.1.2(1), SPRINKLERS IN AREAS WITH EXPOSED STRUCTURE (OBSTRUCTED CONSTRUCTION) SHALL BE INSTALLED WITH DEFLECTOR 1" BELOW THE BOTTOM OF THE BEAM (MAXIMUM 22" BELOW ROOF DECK). UNLESS OTHERWISE NOTED.
12. EXPOSED BAR JOISTS THAT HAVE SPRAY ON FIRE PROOFING THAT MAKES THE JOIST SOLID SHALL BE TREATED LIKE A BEAM WITH THE SPRINKLERS 1" BELOW THE BOTTOM OF THE FIRE PROOFING.
13. FIRESTOP ALL PENETRATIONS THROUGH RATED WALLS, CEILINGS, AND FLOORS WITH U/L LISTED ASSEMBLIES. FIRESTOP ASSEMBLIES SHALL BE EQUAL OR EXCEED THE RATING OF THE WALL, CEILING OR FLOOR. SEE ARCHITECTURAL DRAWINGS FOR FINAL FINISHES.
14. PROVIDE ACCESS PANELS FOR ALL VALVES IN NON-ACCESSIBLE CEILINGS, WALLS, AND CHASES. PROVIDE FIRE RATED PANELS WHERE REQUIRED.
15. PROVIDE A PERMANENTLY ATTACHED NAME TAG ATTACHED TO THE RISER STATING THE REQUIRED DESIGN CRITERIA FOR EACH HYDRAULICALLY DESIGNED SYSTEM.
16. PROVIDE ADDITIONAL SPRINKLERS UNDER ALL DUCTWORK, SUSPENDED EQUIPMENT, AND ANY OTHER OBSTRUCTION 48" AND LARGER. SPRINKLERS SHALL BE SPACED AROUND OBSTRUCTIONS TO MAINTAIN REQUIRED COVERAGE. SPRINKLERS UNDER DUCTWORK, EQUIPMENT, ETC MAY NOT BE INDICATED ON THE DRAWINGS, BUT ARE REQUIRED AND SHALL BE INSTALLED AND COORDINATED WITH FINAL LOCATION OF ALL DUCTWORK AND SUSPENDED EQUIPMENT, ETC.
17. PROVIDE SPRINKLER GUARD ON ALL SPRINKLERS WHERE THEY ARE SUSCEPTIBLE TO DAMAGE.
18. ALL HANGERS ON END SPRINKLERS IN PENDENT POSITION SHALL BE WITHIN 12" OF END OF LINE IN ACCORDANCE WITH NFPA-13.
19. COORDINATE PIPING WITH ALL ELECTRICAL EQUIPMENT (PANELS, TRANSFORMERS, ETC.) PRIOR TO ANY INSTALLATION. DO NOT ROUTE ANY PIPING OVER ANY ELECTRICAL PANELS UNDER ANY CIRCUMSTANCES.
20. FIRE PROTECTION SYSTEM ACCEPTANCE TESTS SHALL BE PERFORMED IN COMPLIANCE WITH THE REQUIREMENTS OF THE ASSOCIATED NFPA CODES.
21. FIRE PROTECTION SYSTEM ACCEPTANCE TESTS SHALL BE WITNESSED BY AUTHORITY HAVING JURISDICTION.
22. CONTRACTOR SHALL PROVIDE FLUSHING CONNECTIONS AT THE END OF ALL MAINS.
23. PIPE SUPPORTS: HANGERS, CLAMPS, RODS AND OTHER ACCESSORIES OF AN APPROVED TYPE AND IN SUFFICIENT NUMBER TO PROPERLY SUPPORT ALL PIPING SHALL BE FURNISHED AND INSTALLED. PIPING SHALL BE SUPPORTED BY ROUND WROUGHT U-TYPE APPROVED ADJUSTABLE HANGERS.
24. CONTRACTOR SHALL INDICATE THE SPRINKLER'S TEMPERATURE RATING, ORIFICE SIZE AND TYPE ON FINAL DRAWINGS.
25. PROVIDE AND MAINTAIN A MINIMUM OF 18" CLEARANCE BETWEEN THE BOTTOM OF THE SPRINKLER DEFLECTOR AND THE TOP OF STORAGE, FILES, ETC.
26. REFER TO ARCHITECTURAL DOCUMENTS FOR LOCATIONS OF ALL SMOKE/FIRE WALLS AND PENETRATION DETAILS FOR MAINTAINING OF THE INTEGRITY OF THE SMOKE/FIRE WALLS IN AN APPROVED MANNER WHEN PENETRATING WALLS AND FLOORS.
27. CONTRACTOR SHALL PROVIDE THE OWNER WITH A THREE RING BINDER OF ALL LITERATURE AND INSTRUCTIONS AS PROVIDED BY THE MANUFACTURER DESCRIBING PROPER OPERATION AND MAINTENANCE OF ALL EQUIPMENT AND DEVICES INSTALLED, A COPY OF NFPA-25 "STANDARD FOR THE INSPECTION, TESTING, AND MAINTENANCE OF WATER-BASED FIRE PROTECTION SYSTEMS", AND THE APPROPRIATE CONTRACTOR'S MATERIAL AND TEST CERTIFICATE(S), COMPLETED AND SIGNED, AS INDICATED IN NFPA-13.
28. CONTRACTOR SHALL COORDINATE STRUCTURAL SUPPORT AND OPENINGS REQUIRED FOR INSTALLATION OF FIRE PROTECTION SYSTEM WITH STRUCTURAL ENGINEER.
29. PROVIDE AS REQUIRED THE FOLLOWING ALARM DEVICES FOR THE SPRINKLER RISER AND BACKFLOW PREVENTER. SIGNALS ARE TO BE INTERLOCKED WITH FIRE ALARM SYSTEM.
    - WATER FLOW INDICATORS (FIRE RISER): VANE TYPE WATER FLOW DETECTOR, RATED TO 250 PSIG; DESIGNED FOR HORIZONTAL OR VERTICAL INSTALLATION; HAVE 2 SPDT CIRCUIT SWITCHES TO PROVIDE ISOLATED ALARM AND AUXILIARY CONTACTS, 7-AMPERE 125-VOLTS AC AND 0.25-AMPERE 24-VOLTS DC; COMPLETE WITH FACTORY-SET, FIELD-ADJUSTABLE RETARD ELEMENT TO PREVENT FALSE SIGNALS, AND TAMPERPROOF COVER WHICH SENDS A SIGNAL WHEN COVER IS REMOVED.
    - SUPERVISORY SWITCHES: SPST, NORMALLY CLOSED CONTACTS, DESIGNED TO SIGNAL VALVE IN OTHER THAN FULL OPEN POSITION.
35. PROVIDE A SPARE SPRINKLER CABINET FOR EACH SPECIFIED SPRINKLER. STORAGE CABINET SHALL BE RED GLOSS, POLYESTER-COATED STEEL CONSTRUCTION. THE QUANTITY OF NEW SPARE SPRINKLERS SHALL REQUIRED BY NFPA-13, BUT NEVER LESS THAN SIX SPARE SPRINKLERS OF EACH MODEL AND EACH DIFFERENT TEMPERATURE RATING INSTALLED; PROVIDE ONE WRENCH FOR EACH DIFFERENT MODEL OF SPRINKLER HEAD (NO CRESCENT WRENCHES PERMITTED). CABINET SHALL HAVE CATCH-LOCK AND CONTINUOUS PIANO HINGE. LOCATE THE SPARE SPRINKLER CABINET ADJACENT TO THE RISERS.
36. CONTRACTOR SHALL PROVIDE ADDITIONAL SPRINKLERS ABOVE ANY PERFORATED CEILING OR SIMILAR AREA NOT DEFINED AS A "CONCEALED SPACE" PER NFPA. COORDINATE LOCATIONS WITH ARCHITECTURAL DOCUMENTS.
37. VICFLEX FLEXIBLE SPRINKLER CONNECTIONS SHALL HAVE AN INSIDE DIAMETER OF 1". HYDRAULIC CALCULATIONS SHALL INCLUDE THE EQUIVALENT LENGTH'S AS PROVIDED BY MANUFACTURER.
38. ALL COUPLINGS AND GROOVED FITTINGS SHALL BE VICTAULIC.
39. COORDINATE FIRE PROTECTION PIPING WITH DUCTWORK, STRUCTURE, PLUMBING, ETC.. PROVIDE OFFSETS AS REQUIRED FOR THE INSTALLATION OF DUCTWORK AND OTHER BUILDING SYSTEMS. FINAL FIELD COORDINATION BETWEEN ALL TRADES SHALL BE COMPLETED PRIOR TO START OF CONSTRUCTION.
40. ANY SPRINKLER SHALL BE REPLACED THAT HAS SIGNS OF LEAKAGE; HAS BEEN PAINTED (OTHER THAN FACTORY APPLICATION), CORRODED, DAMAGED, LOADED, OR IN THE IMPROPER ORIENTATION PER NFPA-25.
41. ALL SPRINKLERS INSTALLED BELOW DUCT SHALL BE INSTALLED WITH DEFLECTOR INSTALLED A MINIMUM 1" BELOW DUCT AND 1" BELOW DUCT INSULATION.
42. PROVIDE ALL SPRINKLERS WITH CELLOPHANE BAGS OR THIN PAPER BAGS TO PROTECT SPRINKLERS FROM OVERSPRAY OR ACCIDENTAL APPLICATION OF PAINT DURING FINISHING OPERATIONS. SHOULD ANY SPRINKLER HAVE PAINT APPLIED THE SPRINKLER SHALL BE REPLACED BY THE FIRE PROTECTION CONTRACTOR AT THE PAINTING CONTRACTOR'S EXPENSE.
43. FIRE PROTECTION CONTRACTOR SHALL WALK THE SITE AND FIELD VERIFY EXISTING SPRINKLER SYSTEM PRIOR TO CONSTRUCTION.

FIRE PROTECTION LEGEND

SYMBOL	DESCRIPTION
- - - - - - -	EXISTING SPRINKLER PIPING
———	NEW SPRINKLER PIPING
———	NEW SPRINKLER MAIN
··········	EXISTING UNDERGROUND FIRE MAIN
⊱⊰	PIPE CONTINUATION
o—	PIPE UP
o— —o	PIPE DOWN
◀●	NEW TO EXISTING CONNECTION
⊗	FIRE RISER
FDC	FIRE DEPARTMENT CONNECTION

PIPE MATERIAL SPECIFICATION

LOCATION USED	MATERIAL
COMMERCIAL	M-COAT (ALLIED TUBE)

PIPE SPECIFICATION

DIAMETER	SCHEDULE
1"	40
1¼"	40
1½"	10
2"	10
2½"	10
4"	10

FIRE SPRINKLER LEGEND

SYMBOL	ORF	TEMP	RESPONSE	K-FAC	FINISH	MODEL (SIN)	STYLE	NOTES	MFG.
⊙	1/2"	155°	QUICK	5.6	WHITE	V3802	CONCEALED	–	VICTAULIC
⌛	1/2"	155°	QUICK	5.6	BRASS	V2704	UPRIGHT	–	VICTAULIC

FIRE PROTECTION FLOW TEST DATA

TEST CONDUCTED BY –

DATE – XXX
TIME – XXX
STATIC – XXX
RESIDUAL – XXX
FLOW – XXX
LOCATION – XXX

FIRE PROTECTION DRAWING INDEX

SHEET	DESCRIPTION
FP0.0	FIRE PROTECTION NOTES & SCHEDULES
FP1.1	FIRE PROTECTION FLOOR PLANS
FP1.2	FIRE PROTECTION SITE PLAN AND FLOOR PLANS
FP5.1	FIRE PROTECTION DETAILS

SHANE HAMILTON, P.E.
#75420

Engineering Professionals, Inc.
Mechanical Engineers
EB-0006437
1717 N. Howard Avenue
Tampa, FL 33607 (813) 251-6848

FleischmanGarcia
ARCHITECTURE • PLANNING • INTERIOR DESIGN
SAFETY HARBOR OFFICE
195 FOURTH AVENUE NORTH
SAFETY HARBOR, FLORIDA 34695
PHONE (727) 725-8880
FAX (727) 725-3900
TAMPA OFFICE
324 HYDE PARK AVENUE, SUITE 300
TAMPA, FLORIDA 33606
PHONE (813) 251-4400
FAX (813) 251-1994
SARASOTA OFFICE
5967 CATTLEMEN LANE, SUITE 6
SARASOTA, FLORIDA 34232
PHONE (941) 342-9293
FAX (941) 342-9253
REGISTRATION NUMBER AA C000123

NEW TAMPA RECREATION CENTER ADDITION

TAMPA, FL 33647

THIS DESIGN AND DRAWING IS THE SOLE PROPERTY OF FLEISCHMANGARCIA. NO PART OF THIS WORK MAY BE REPRODUCED WITHOUT PRIOR WRITTEN PERMISSION FROM FLEISCHMANGARCIA.

I CERTIFY TO THE BEST OF MY KNOWLEDGE THAT THESE DRAWINGS COMPLY W/ ALL RELEVANT BUILDING CODES

FGA PROJECT NUMBER
18015

ISSUE DATE
11/07/18

SHEET NUMBER
FP0.0

11-12-18 Corderro Costly \\ANA2\Server\2010_0000\2018_8000\8053\8053-FP.dwg

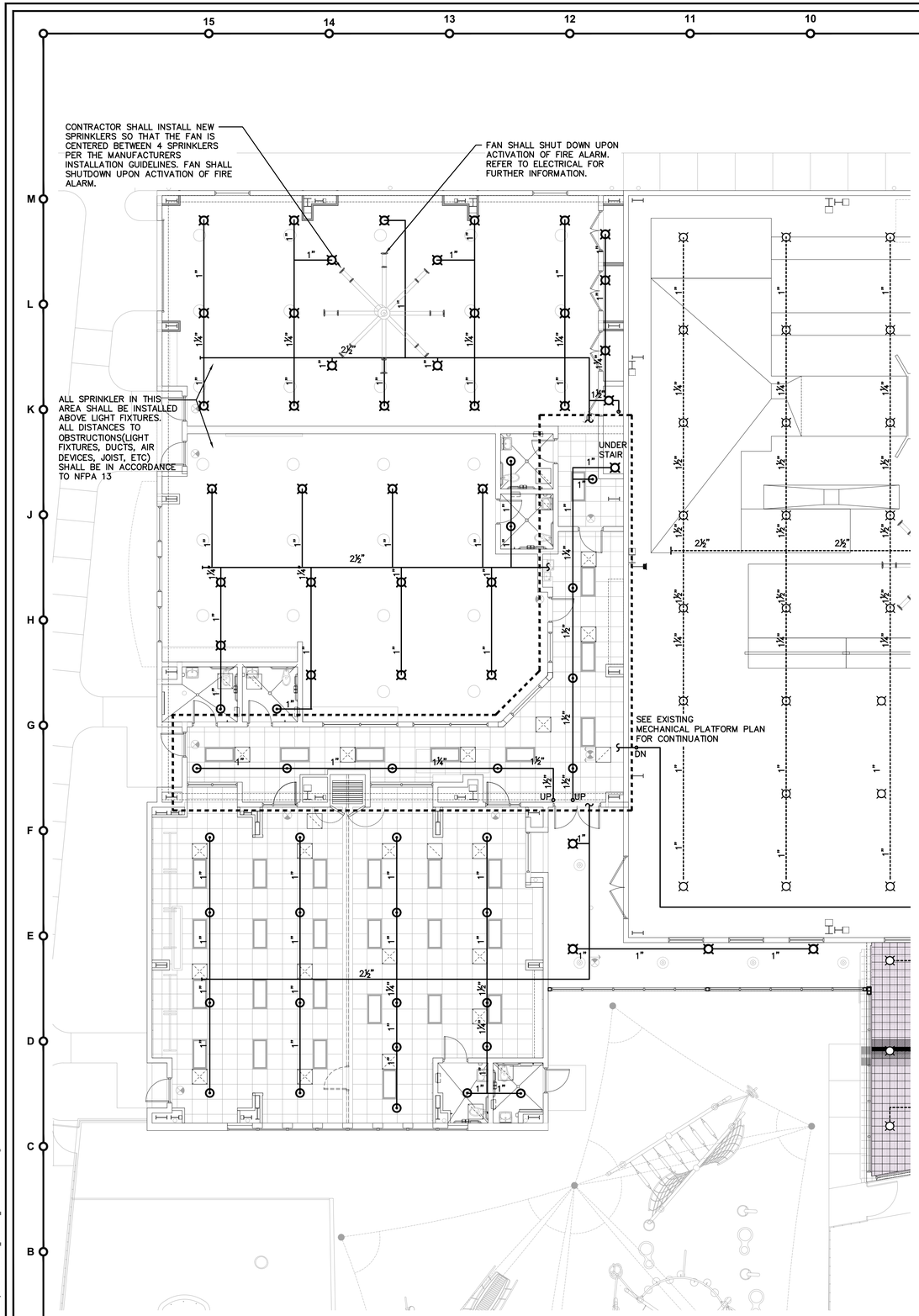

ENLARGED FLOOR PLAN – FIRE PROTECTION

SCALE: 1/8"=1'-0"

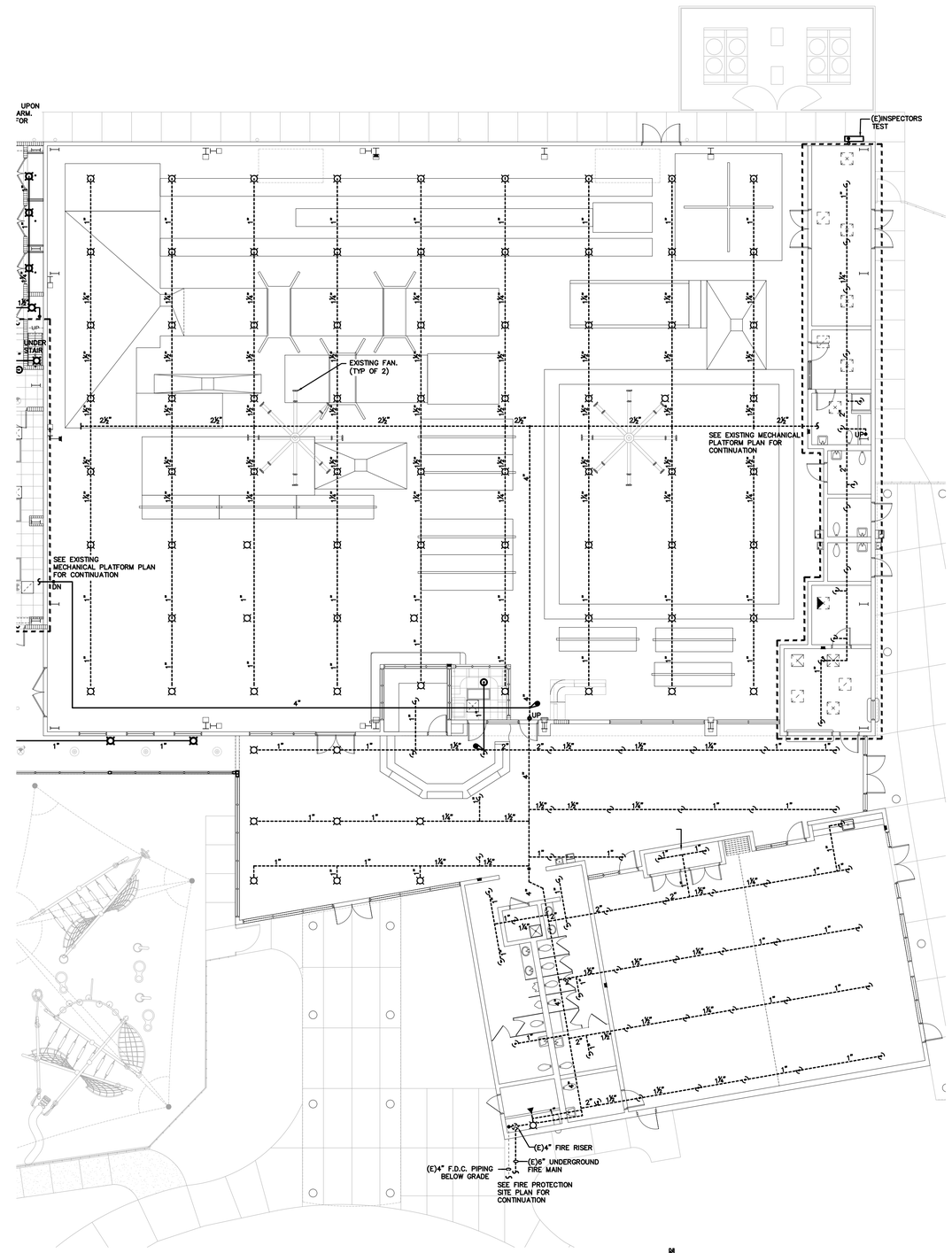

FLOOR PLAN – FIRE PROTECTION

SCALE: 3/32"=1'-0"

8053.00

SHANE HAMILTON, P.E.
#75420

Engineering Professionals, Inc.
Mechanical Electrical Plumbing
EB-0006437
1717 N. Howard Avenue
Tampa, FL 33607 (813) 251-6848

FleischmanGarcia.
ARCHITECTURE · PLANNING · INTERIOR DESIGN
SAINT LOUIS 1034 SOUTH BRENTWOOD BLVD. SUITE 1900 ST. LOUIS, MISSOURI 63117 PHONE (314) 821-5900 FAX (314) 821-1678
TAMPA 555 FOURTH AVENUE NORTH ST. PETERSBURG, FLORIDA 33705 PHONE (727) 823-8383 FAX (727) 823-9088
ORLANDO 324 HYDE PARK AVENUE, SUITE 350 ORLANDO, FLORIDA 32803 PHONE (407) 217-4460 FAX (407) 217-4461
CHICAGO 5969 CATALDER LANE, SUITE E ALBANY, NEW YORK 12211 PHONE (518) 242-0253 FAX (518) 242-0253
REGISTRATION NUMBER AA C000123

NEW TAMPA RECREATION CENTER ADDITION

TAMPA, FL 33647

THE DESIGN AND DRAWING IS THE SOLE PROPERTY OF FLEISCHMANGARCIA, AND MAY NOT BE USED OR BE REPRODUCED WITHOUT PRIOR WRITTEN PERMISSION FROM FLEISCHMANGARCIA.

I CERTIFY TO THE BEST OF MY KNOWLEDGE THAT THESE DRAWINGS COMPLY WITH ALL RELEVANT BUILDING CODES

FGA PROJECT NUMBER
18015

ISSUE DATE
11/07/18

SHEET NUMBER
FP1.1

11-12-18 Cordero Cost@ANDZ\Server2016_0000\2018_B0080380380\3-FP.dwg

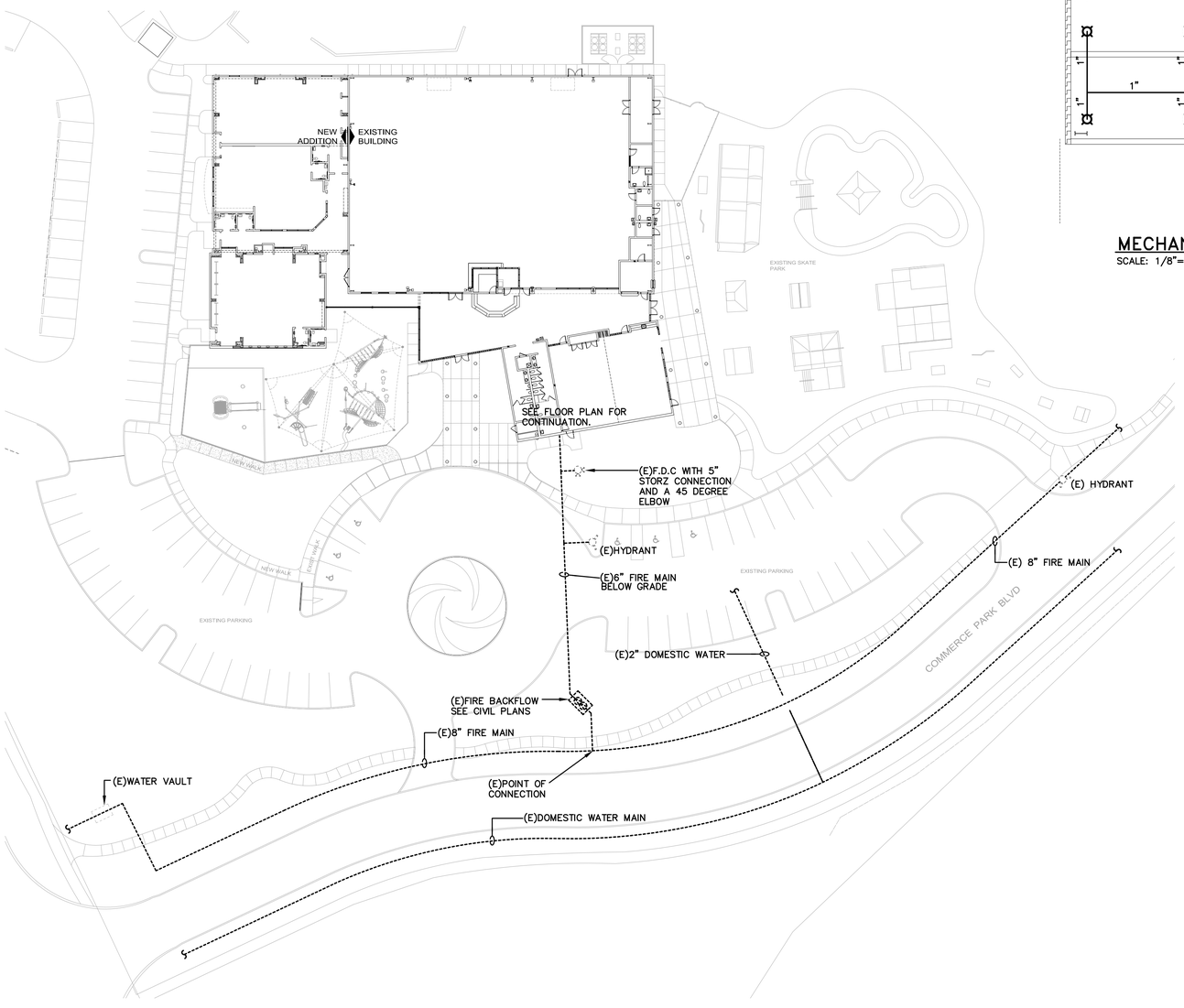

SITE PLAN – FIRE PROTECTION

SCALE: 1"=30'-0"

8053.00

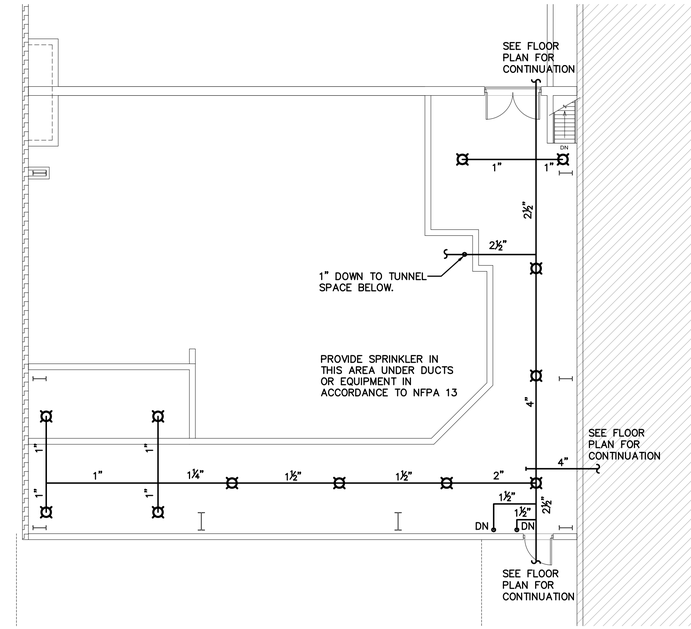

MECHANICAL PLATFORM PLAN – FIRE PROTECTION

SCALE: 1/8"=1'-0"

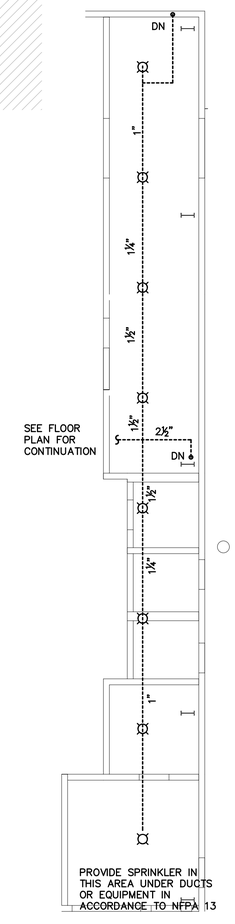

EXISTING MECHANICAL PLATFORM PLAN – FIRE PROTECTION

SCALE: 1/8"=1'-0"

SHANE HAMILTON, P.E.
#75420

Engineering Professionals, Inc.
Mechanical • Electrical • Plumbing
EB - 0006437
1717 N. Howard Avenue
Tampa, FL 33607 (813) 251-6848

FleischmanGarcia.
ARCHITECTURE • PLANNING • INTERIOR DESIGN
SAINT LOUIS OFFICE
705 FOURTH AVENUE NORTH
SAINT LOUIS PARK, MINNESOTA 55405
PHONE (777) 724-5880
FAX (777) 724-5888

324 HYDE PARK AVENUE, SUITE 300
TAMPA, FLORIDA 33606
PHONE (813) 251-6400
FAX (813) 251-6848

5960 CASTLEMAIN LANE, SUITE 6
ALBANY, GEORGIA 31721-8222
PHONE (941) 342-0293
FAX (941) 342-0293

REGISTRATION NUMBER AA C000123

NEW TAMPA RECREATION CENTER ADDITION

TAMPA, FL 33647

THE DESIGN AND DRAWING IS THE SOLE PROPERTY OF FLEISCHMAN GARCIA, INC. IT MAY NOT BE REPRODUCED WITHOUT THE WRITTEN PERMISSION FROM FLEISCHMAN GARCIA

I CERTIFY TO THE BEST OF MY KNOWLEDGE THAT THESE DRAWINGS COMPLY WITH ALL RELEVANT BUILDING CODES

FGA PROJECT NUMBER
18015

ISSUE DATE
11/07/18

SHEET NUMBER
FP1.2

Corderoro Costa\ANA2\Server2\170_0000\20118_B0026\B0026\8003-FP.dwg
11-12-18

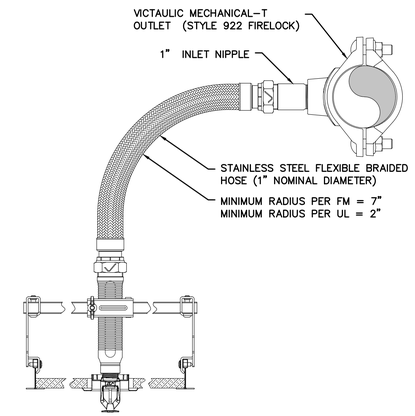

NOTES:
1. REFER TO VICTAULIC SUBMITTAL 10.85 FOR ADDITIONAL DETAILS.
2. REFER TO VICTAULIC SUBMITTAL 10.85 FOR MAXIMUM TOTAL BENDS.
3. MINIMUM RADIUS: FM = 7" , UL = 2"
4. AB2 BRACKET TO BE USED.

FLEXIBLE DROP DETAIL

NO SCALE

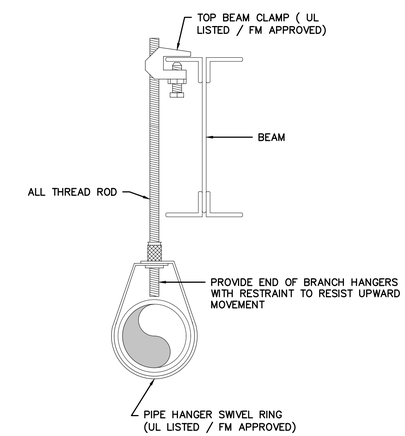

HANGER – STEEL

NO SCALE

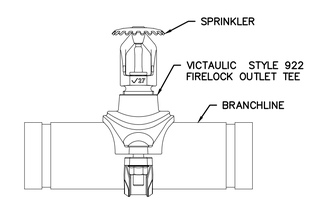

UPRIGHT SPRINKLER DETAIL

NO SCALE

SHANE HAMILTON, P.E.
#75420

Engineering Professionals, Inc.
Mechanical Engineers
EB-0006437
1717 N. Howard Avenue
Tampa, FL 33607 (813) 251-6848

FleischmanGarcia.
ARCHITECTURE · PLANNING · INTERIOR DESIGN
SAFETY HARBOR OFFICE
1595 FOURTH AVENUE NORTH
SAFETY HARBOR, FLORIDA 34695
PHONE (727) 726-8080
FAX (727) 726-9066
334 HYDE PARK AVENUE, SUITE 300
TAMPA, FLORIDA 33606
PHONE (813) 251-6400
FAX (813) 251-6446
3967 CATTLEMEN LANE, SUITE 6
SARASOTA, FLORIDA 34232
PHONE (941) 342-0293
FAX (941) 342-0293
REGISTRATION NUMBER AA C000123

NEW TAMPA RECREATION CENTER ADDITION

TAMPA, FL 33647

THE DESIGN AND DRAWING IS THE SOLE PROPERTY OF FLEISCHMANGARCIA, AND MUST NOT BE LOANED, NOR BE REPRODUCED WITHOUT THE WRITTEN PERMISSION FROM FLEISCHMANGARCIA.

I CERTIFY TO THE BEST OF MY KNOWLEDGE THAT THESE DRAWINGS COMPLY WITH ALL RELEVANT BUILDING CODES

FGA PROJECT NUMBER
18015

ISSUE DATE
11/07/18

SHEET NUMBER
FP5.1

Cordaro Cost@AN/Z:\Server\2010_0000\2018_8000\8003\8003-FP.dwg
11-12-18

ELECTRICAL SYMBOL LEGEND

LINE WEIGHT & LINE TYPE DESIGNATIONS		
SYMBOL	DESCRIPTION	REMARKS
	EXISTING (UNLESS OTHERWISE INDICATED)	
	PROVIDE AS NEW (UNLESS OTHERWISE INDICATED)	
BASIC DRAWING		
SYMBOL	DESCRIPTION	REMARKS
#	KEYED DRAWING NOTE	
	REMOVALS	
	CIRCUIT	
~	CONTINUATION	
POWER - DISTRIBUTION		
SYMBOL	DESCRIPTION	REMARKS
	PANELBOARD (FLUSH-MOUNTED)	
	PANELBOARD (SURFACE-MOUNTED)	
T	TRANSFORMER	
	DISCONNECT SWITCH (NON-FUSED)	
	DISCONNECT SWITCH (FUSED)	
	MAGNETIC MOTOR STARTER	
	COMBINATION MAGNETIC MOTOR STARTER/DISCONNECT	
VFD	VARIABLE FREQUENCY DRIVE (VFD)	
	MOTOR	
	GROUNDING BUSBAR	SEE DETAIL ON PLANS
POWER - BRANCH DEVICES		
SYMBOL	DESCRIPTION	REMARKS
	SIMPLEX RECEPTACLE	MOUNT AT 18" AFF, UNO
	DUPLEX RECEPTACLE	MOUNT AT 18" AFF, UNO
	CONTROLLED DUPLEX RECEPTACLE	MOUNT AT 18" AFF, UNO
	DUPLEX RECEPTACLE	MOUNT ABOVE COUNTER, UNO MOUNT HORIZONTAL FOR ADA
	TWO DUPLEX RECEPTACLES MOUNTED IN COMMON BOX	MOUNT AT 18" AFF, UNO
	SPECIAL PURPOSE RECEPTACLE, SUBSCRIPT INDICATES TYPE	MOUNT AT 18" AFF, UNO
J J	JUNCTION BOX OR OUTLET BOX	
	RECEPTACLE(S) IN RECESSED FLOOR BOX	
	CEILING MOUNTED RECEPTACLE(S)	
TELEPHONE/DATA/COMMUNICATION		

SCOPE OF WORK SHALL BE RACEWAY ONLY. FOR EACH WALL DEVICE LOCATION, PROVIDE RECESSED WALL-BOX AND 1" CONDUIT STUB WITH PULL STRING TO NEAREST ACCESSIBLE ABOVE CEILING SPACE. FOR EACH CEILING DEVICE LOCATION, PROVIDE RECESSED CEILING BOX AND 1" CONDUIT TO NEAREST ACCESSIBLE ABOVE-CEILING SPACE. DEVICES, CABLING, EQUIPMENT, ETC. SHALL BE PROVIDED BY OWNER LV SYSTEMS CONTRACTOR. SEE LOW VOLTAGE SYSTEMS GENERAL NOTES ON SHEET E0.2 FOR ADDITIONAL INFORMATION.

SYMBOL	DESCRIPTION	REMARKS
▽C	DATA (LAN) OUTLET: INDICATES TWO DATA JACKS. (C - INDICATES CEILING MOUNTED)	MOUNT AT 18" AFF, UNO
▼	TELEPHONE (VOICE) OUTLET: INDICATES ONE TELEPHONE JACK.	MOUNT AT 18" AFF, UNO
	TELEPHONE (VOICE) / DATA (LAN) OUTLET: INDICATES ONE TELEPHONE JACK AND ONE DATA JACK.	MOUNT AT 18" AFF, UNO
C W WH	WIRELESS ACCESS POINT (C - INDICATES CEILING MOUNTED)	
DR	DATA RACK (REFER TO RISER, AND/OR SPECIFICATIONS FOR TYPE)	
TV	CABLE TELEVISION OUTLET	MOUNT AT 18" AFF, UNO
AD	AUDIBLE/VISUAL DOORBELL CHIME	MOUNTING HEIGHT PER ADA
IC	INTERCOM STATION	
SP PA	SPEAKER (PA - INDICATES SOUND/PUBLIC ADDRESS SYSTEM)	AS NOTED ON PLANS
VC	VOLUME CONTROL	MOUNT AT 48" AFF, UNO
M	MUSIC PORT (1 PER ROOM SECTION)	MOUNT AT 48" AFF, UNO
	TELECOM BACKBOARD (TBB)	SEE PLANS

LIGHTING (LETTER INDICATES TYPE, REFER TO LIGHT FIXTURE SCHEDULE FOR ADDITIONAL INFORMATION)		
SYMBOL	DESCRIPTION	REMARKS
	LIGHT FIXTURE	WALL MOUNTED
	EMERGENCY LIGHT FIXTURE	WALL MOUNTED
	LIGHT FIXTURE	CEILING MOUNTED
	EMERGENCY LIGHT FIXTURE	CEILING MOUNTED
	LIGHT FIXTURE	CEILING MOUNTED
	EMERGENCY LIGHT FIXTURE	CEILING MOUNTED
	LIGHT FIXTURE	CEILING MOUNTED
	EMERGENCY LIGHT FIXTURE	CEILING MOUNTED
	LIGHT FIXTURE	CEILING MOUNTED
	EMERGENCY LIGHT FIXTURE	CEILING MOUNTED
	LIGHT FIXTURE	WALL MOUNTED
	EMERGENCY LIGHT FIXTURE	WALL MOUNTED
	EXIT LIGHT (HATCHING/ARROW INDICATES FACE/DIRECTION)	CEILING MOUNTED
	EXIT LIGHT (HATCHING/ARROW INDICATES FACE/DIRECTION)	WALL MOUNTED
	EMERGENCY BATTERY PACK LIGHT FIXTURE	WALL MOUNTED
$	SINGLE POLE SWITCH	MOUNT AT 48" AFF, UNO
S3	SINGLE POLE SWITCH (3-WAY)	MOUNT AT 48" AFF, UNO
SD	SINGLE POLE SWITCH (DIMMER)	MOUNT AT 48" AFF, UNO
OS	OCCUPANCY SENSOR/WALL SWITCH (SUBSCRIPT INDICATES TYPE)	MOUNT AT 48" AFF, UNO
OS	OCCUPANCY SENSOR (SUBSCRIPT INDICATES TYPE)	CEILING MOUNTED
PP	POWER PACK	
PC	PHOTOCELL	
	CEILING FAN	PENDANT MOUNTED
FIRE ALARM		
SYMBOL	DESCRIPTION	REMARKS
FACP	FIRE ALARM CONTROL PANEL	
FAAP	FIRE ALARM ANNUNCIATOR PANEL	
S	SMOKE DETECTOR	TO MATCH EXISTING
H	HEAT DETECTOR	TO MATCH EXISTING
D	DUCT SMOKE DETECTOR	TO MATCH EXISTING
F	MANUAL PULL STATION	TO MATCH EXISTING
F	STROBE NOTIFICATION DEVICE	TO MATCH EXISTING
F	COMBINATION HORN/STROBE NOTIFICATION DEVICE	TO MATCH EXISTING
S	COMBINATION SPEAKER/STROBE NOTIFICATION DEVICE	TO MATCH EXISTING
DH	DOOR HOLD-OPEN DEVICE	
FS	WATER FLOW DETECTION SWITCH	
TS	TAMPER SWITCH	
B	FIRE PROTECTION ALARM BELL	
CM	CONTROL MODULE	
MM	MONITOR MODULE	
SD	SMOKE DAMPER	
C	CARBON MONOXIDE DETECTOR	
NAC	NOTIFICATION APPLIANCE CIRCUIT EXTENDER PANEL	

TYPICAL BRANCH DEVICE INFORMATION

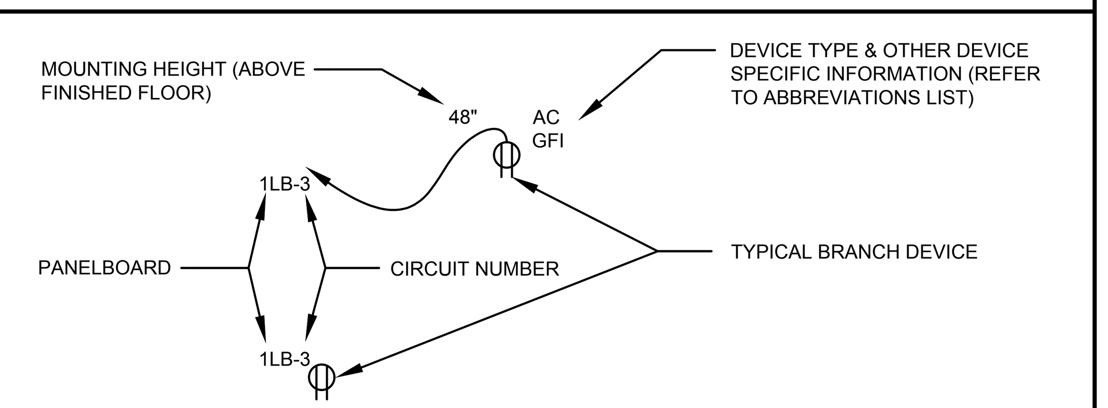

BRANCH CIRCUIT NOTES

1. CIRCUIT NUMBERS ARE FOR REFERENCE ONLY AND INDICATE THE DEVICES REQUIRED TO BE CONNECTED TO DESIGNATED CIRCUITS.
2. THE CONTRACTOR IS RESPONSIBLE FOR DETERMINING AND PROVIDING THE ACTUAL NUMBER OF CONDUCTORS REQUIRED FOR ALL BRANCH CIRCUIT WIRING TO SERVE THE INTENDED FUNCTION.
3. THE CONTRACTOR IS RESPONSIBLE FOR PROPERLY BALANCING LOADS ON ALL THREE PHASES.
4. ALL BRANCH CIRCUITS SHALL HAVE SEPARATE GROUND WIRE.
5. ALL BRANCH CIRCUITS SHALL HAVE SEPARATE NEUTRAL WIRE.
6. ALL BRANCH CIRCUITS SHALL BE SIZED PER OVERCURRENT PROTECTION RATING AND NEC REQUIREMENTS (INCLUDING NEC CONDUCTOR AMPACITY TABLES, ARTICLE 334.80, AND 338.10(B)(4)).
7. PROVIDE ARC-FAULT CIRCUIT PROTECTION PER NEC ARTICLE 210.12.

KEY CODES AND STANDARDS

FLORIDA STATE FIRE MARSHAL RULE (EFFECTIVE DATE - DECEMBER 31, 2017):
2017 RULE 69A-3.012, STANDARDS OF THE NATIONAL FIRE PROTECTION ASSOCIATION AND OTHER STANDARDS ADOPTED
2017 6TH EDITION - FLORIDA FIRE PREVENTION CODE
NFPA 1, 2015 EDITION, THE FIRE CODE
SECTIONS 633.206(1)(a) AND (b), F.S.:
(a) NFPA 2, 2011 EDITION, HYDROGEN TECHNOLOGIES CODE
(b) NFPA 3, 2015 EDITION, RECOMMENDED PRACTICE FOR COMMISSIONING OF FIRE PROTECTION AND LIFE SAFETY SYSTEMS
NFPA 70, 2014 EDITION, NATIONAL ELECTRICAL CODE (NEC)
NFPA 72, 2013 EDITION, NATIONAL FIRE ALARM AND SIGNALING CODE
NFPA 75, 2013 EDITION, STANDARD FOR THE FIRE PROTECTION OF INFORMATION TECHNOLOGY EQUIPMENT`
NFPA 70B, 2016 EDITION, RECOMMENDED PRACTICE FOR ELECTRICAL EQUIPMENT MAINTENANCE
NFPA 70E, 2018 EDITION, STANDARD FOR ELECTRICAL SAFETY IN THE WORKPLACE
NFPA 90A, 2015 EDITION, STANDARD FOR THE INSTALLATION OF AIR-CONDITIONING AND VENTILATING SYSTEMS
NFPA 101, 2015 EDITION, LIFE SAFETY CODE
NFPA 101A, 2013 EDITION, GUIDE ON ALTERNATIVE APPROACHES TO LIFE SAFETY
NFPA 110, 2013 EDITION, STANDARD FOR EMERGENCY & STANDBY POWER SYSTEMS
RULE CHAPTER 69A-60, THE FLORIDA FIRE PREVENTION CODE
FBC 2017, 6TH EDITION, CHAPTER 35, FLORIDA BUILDING CODE-BUILDING
FBC 2017, 6TH EDITION, FLORIDA BUILDING CODE ENERGY CONSERVATION
UL 467, 10TH EDITION, 2017, GROUNDING AND BONDING EQUIPMENT
IEEE-C2, 2017 EDITION, NATIONAL ELECTRICAL SAFETY CODE (NESC)
IEEE-142, 2007 EDITION, IEEE RECOMMENDED PRACTICE FOR GROUNDING OF INDUSTRIAL AND COMMERCIAL POWER SYSTEMS

OTHER PUBLICATIONS AND CODE COMPLIANCE:
IN ADDITION TO THE CODES AND STANDARDS LISTED ABOVE, ALL ELECTRICAL WORK SHALL COMPLY WITH THE APPLICABLE REQUIREMENTS OF THE LATEST EDITION OF THE STANDARDS OF THE NATIONAL ELECTRICAL MANUFACTURER'S ASSOCIATION (NEMA); INSULATED POWER CABLE ENGINEER'S ASSOCIATION (IPCEA); AND ALL APPLICABLE FEDERAL, STATE, CITY, AND LOCAL CODES, REGULATIONS, ORDINANCES, PUBLICATIONS AND MANUALS. ALL NEW MANUFACTURED EQUIPMENT, DEVICES, ETC. SHALL BE LISTED BY THE UNDERWRITER'S LABORATORY (UL).

ABBREVIATIONS

A	AMPERE(S)	KAIC	1000 AMPERE INTERRUPTING CAPACITY
AC	ALTERNATING CURRENT		
ACT	ACOUSTICAL CEILING TILE	KCMIL	1000 CIRCULAR MIL(S)
ADA	AMERICANS WITH DISABILITIES ACT	KVA	KILOVOLT AMPERE(S)
AFCI	ARC-FAULT CIRCUIT INTERRUPTER	KW	KILOWATT(S)
AFF	ABOVE FINISHED FLOOR	LAN	LOCAL AREA NETWORK
AFG	ABOVE FINISHED GRADE	LED	LIGHT EMITTING DIODE
AHJ	AUTHORITY HAVING JURISDICTION	LTG	LIGHTING
ANSI	AMERICAN NATIONAL STANDARDS INSTITUTE	LV	LOW VOLTAGE
		MC	MECHANICAL CONTRACTOR
AWG	AMERICAN WIRE GUAGE	MCA	MINIMUM CIRCUIT AMPACITY
BLDG	BUILDING	MCB	MAIN CIRCUIT BREAKER
BFG	BELOW FINISHED GRADE	MISC	MISCELLANEOUS
C	CONDUIT	MIN	MINIMUM
CB/CKT BKR	CIRCUIT BREAKER	MFR	MANUFACTURER
CL	CLOSET	MH	MOUNTING HEIGHT
CLG	CEILING	MTD	MOUNTED
CKT	CIRCUIT	N	NEUTRAL
CO	CONDUIT ONLY	(N)	NEW
CONC	CONCRETE	NEC	NATIONAL ELECTRIC CODE
COND	CONDUCTOR	NFPA	NATIONAL FIRE PROTECTION ASSOCIATION
CONST	CONSTRUCTION		
CP	CONTROL PANEL	NL	NIGHT LIGHT
CT	CURRENT TRANSFORMER	NO	NORMALLY OPEN
CU	COPPER	NTS	NOT TO SCALE
DED	DEDICATED	P	POLE
DISC	DISCONNECT	PA	PUBLIC ADDRESS
DISH	DISHWASHER	PB	PULL BOX
DISP	DISPOSAL	PC	PLUMBING CONTRACTOR
DIV	DIVISION	PH/Ø	PHASE
DT	DUAL TECHNOLOGY (IR/US)	PNL	PANEL
DWG	DRAWING	PRI	PRIMARY
EA	EACH	PWR	POWER
EC	ELECTRICAL CONTRACTOR	QTY	QUANTITY
EF	EXHAUST FAN	REC/RECEPT	RECEPTACLE
EGC	EQUIPMENT GROUNDING CONDUCTOR	REF	REFRIGERATOR
		SEC	SECONDARY
ELEC	ELECTRIC	SPD	SURGE PROTECTION DEVICE
EM/EMER	EMERGENCY	SPEC	SPECIFICATION
EQUIPT	EQUIPMENT	SW	SWITCH
(ERL)	EXISTING RELOCATED	TEL	TELEPHONE
(ETR)	EXISTING TO REMAIN	TVSS	TRANSIENT VOLTAGE SURGE SUPPRESSION
EXT	EXTERIOR		
FA	FIRE ALARM	TYP	TYPICAL
FBC	FLORIDA BUILDING CODE	UG	UNDERGROUND
FBO	FURNISHED BY OTHERS	UL	UNDERWRITER'S LABORATORIES
FHP	FRACTIONAL HORSEPOWER	UNO	UNLESS NOTED OTHERWISE
FLA	FULL LOAD AMPS	UON	UNLESS OTHERWISE NOTED
FLUOR	FLUORESCENT	UPS	UNINTERRUPTIBLE POWER SUPPLY
FT	FEET	US	ULTRASONIC
G/GND	GROUND	UV	ULTRAVIOLET
GC	GENERAL CONTRACTOR	V	VOLT(S)
GFI	GROUND FAULT INTERRUPTER	VA	VOLTAMPERE(S)
HOA	HAND-OFF-AUTO SELECTOR SWITCH	VFD	VARIABLE FREQUENCY DRIVE
HP	HORSEPOWER	W	WATT(S)
IR	INFRARED	WP	WEATHERPROOF
JB	JUNCTION BOX	WR	WEATHER RESISTANCE

GENERAL NOTES

1. THE GENERAL NOTES APPLY TO ALL DRAWINGS UNDER THIS CONTRACT. REFER TO INDIVIDUAL DRAWINGS FOR ADDITIONAL NOTES.
2. ALL ELECTRICAL WORK SHOWN SHALL BE PROVIDED AS NEW, UNLESS OTHERWISE NOTED.
3. DRAWINGS ARE DIAGRAMMATIC AND INDICATE GENERAL ARRANGEMENT OF SYSTEMS AND WORK. FOLLOW DRAWING IN LAYING OUT WORK AND CHECK DRAWINGS OF OTHER TRADES TO VERIFY SPACE CONDITIONS. MAINTAIN HEADROOM AND SPACE CONDITIONS. BRANCH CIRCUIT NUMBERS ARE FOR REFERENCE ONLY. CONTRACTOR SHALL DETERMINE THE CIRCUIT NUMBERS AND PROVIDE A SCHEDULE IN PANEL IDENTIFYING BRANCH CIRCUITS.
4. JUNCTION AND PULL BOXES SHALL GENERALLY BE LOCATED FOR FLUSH MOUNTING IN FINISHED SPACES. WHERE NECESSARY, CONDUITS SHALL BE REROUTED OR OTHER ARRANGEMENTS MADE FOR CONCEALMENT. PULL BOXES SHALL BE PROVIDED AS INDICATED AND WHEREVER NECESSARY TO FACILITATE PULLING OF WIRE AND COORDINATE LOCATIONS WITH OTHER TRADES. COVERS OF JUNCTION AND PULL BOXES SHALL BE ACCESSIBLE. FOR EMPTY RACEWAY RUNS. PULL BOXES SHALL BE PROVIDED EVERY 100 FEET AND AS INDICATED OR NECESSARY.
5. BOXES SHALL BE SET SQUARE AND TRUE WITH BUILDING FINISH. WALL AND SWITCH OUTLETS SHALL BE ERECTED IN ADVANCE OF FURRING AND FIREPROOFING. BOXES SHALL BE SECURED TO BUILDING STRUCTURE BY ADJUSTABLE STRAP IRONS.
6. IN EXISTING BUILDINGS, ALL REQUIRED ACCESS DOORS SHALL BE FURNISHED AND INSTALLED UNDER THE ELECTRICAL SECTION. ALL ACCESS DOOR LOCATIONS SHALL BE FIELD COORDINATED WITH THE OWNER.
7. NO ELECTRICAL RACEWAYS OR CONDUCTORS SHALL BE INSTALLED WITHIN 3 INCHES OF STEAM OR HOT WATER PIPES, OR APPLIANCES, EXCEPT FOR CROSSING WHERE RACEWAYS SHALL BE AT LEAST 1 INCH FROM PIPE COVER.
8. SUFFICIENTLY LONG WIRE SLACK SHALL BE LEFT IN RUNS TO ALLOW FOR MAKING PROPER FINAL CONNECTIONS. ALL EMPTY CONDUITS SHALL BE PROVIDED WITH #12 AWG STEEL DRAG WIRES.
9. REFER TO MECHANICAL DRAWINGS FOR EXACT LOCATION OF ALL HVAC EQUIPMENT. (AC UNITS, FANS, VAV BOXES, ETC).
10. REFER TO PLUMBING DRAWINGS FOR EXACT LOCATION OF ALL PLUMBING EQUIPMENT.
11. ALL WIRING SHALL BE ROUTED IN AN ORGANIZED AND NEATLY MANNER.
12. SUBMIT DIMENSIONED LAYOUTS OF ALL ELECTRIC EQUIPMENT WITH EQUIPMENT SUBMITTALS.
13. ELECTRICAL CONTRACTOR IS RESPONSIBLE FOR COORDINATING ALL RACEWAYS RUNS WITH EXISTING CONDITIONS AND INCLUDE ALL PULLBOXES, OFFSETS, CUTTING, PATCHING, PAINTING TO MATCH EXISTING, SUPPORTS, ETC. AS REQUIRED.
14. THE ROUTING AND LOCATION OF CONDUIT RUNS ARE GENERALLY NOT DIMENSIONAL ON THE DRAWINGS BUT SHALL BE DETERMINED IN THE FIELD TO SUIT THE LOCATIONS OF EQUIPMENT, TO CONFORM TO STRUCTURAL AND ARCHITECTURAL FEATURES AND TO AVOID INTERFERENCES.
15. ALL CUTTING AND RESTORATION OF SLAB AND FLOOR SHALL BE IN ACCORDANCE WITH STRUCTURAL ENGINEER'S REQUIREMENTS AND AS APPROVED BY THE STRUCTURAL ENGINEER.
16. ELECTRICAL CONTRACTOR SHALL VERIFY ALL PENETRATIONS, POKE THRUS, AND EXISTING CONDUIT LOCATIONS PRIOR TO MODIFICATION.
17. ALL SIGHT EXPOSED ELECTRICAL DEVICES SHALL BE LOCATED AS PER ARCHITECT'S DRAWINGS AND/OR DIRECTION.
18. WHERE CONDUIT OR JUNCTION BOXES ARE RUN IN SLAB IN EXISTING AREAS, THE ELECTRICAL CONTRACTOR IS RESPONSIBLE FOR ALL CUTTING, PATCHING, AND RESTORATION OF SLAB AND FLOOR.
19. ELECTRICAL CONTRACTOR IS RESPONSIBLE FOR PROVIDING ALL LIGHT FIXTURES, REMOTE BALLASTS AND ASSOCIATED WIRING, SUPPORTS, HARDWARE, AND ACCESSORIES AS REQUIRED.
20. SYMBOLS AND LEGENDS SHOWN ON THIS DRAWING ARE FOR ELECTRICAL DRAWINGS ONLY. SEE ARCHITECTURAL DRAWINGS AND TRADE DRAWINGS FOR RESPECTIVE SYMBOLS AND LEGENDS.
21. THE ELECTRICAL CONTRACTOR IS RESPONSIBLE FOR PROVIDING ALL SLAB CUTS, FOUNDATION WALL PENETRATIONS, WALL OPENINGS, CORE DRILLING, ROOF PENETRATIONS, ETC. AND PATCHING AS REQUIRED TO PROVIDE ALL ELECTRICAL WORK. FOR FOUNDATION WALL PENETRATIONS PROVIDE 4"X4"X3/8" WELDED STEEL ANGLE BY THE CONTRACTOR AND APPROVED BY THE STRUCTURAL ENGINEER AND PROVIDE WATER PROOFING. ALL ROOF, TUNNEL AND FOUNDATION PENETRATIONS SHALL BE WATER PROOFED. COORDINATE WORK SO AS TO MAINTAIN ANY AND ALL WARRANTIES FOR ROOF SYSTEMS, FOUNDATIONS, ETC.
22. ALL TELEPHONE/DATA RACEWAYS SHALL BE PROVIDED WITH INSULATED END BUSHINGS.
23. SEPARATE RACEWAYS SHALL BE PROVIDED FOR CONDUCTORS OF NORMAL AND EMERGENCY CIRCUITS (IF APPLICABLE).
24. HORIZONTAL OR CROSS RUNS IN PARTITIONS OR WALLS ARE NOT PERMITTED.
25. THE ELECTRICAL CONTRACTOR SHALL NOT INSTALL MORE THAN THE NUMBER OF CIRCUITS SHOWN IN ANY HOMERUN BRANCH CIRCUIT WIRING.
26. CONTRACTOR TO PROVIDE FIRE PROOFING AT ALL PENETRATIONS OF RATED PARTITIONS, FLOORS, AND WHERE THE EXISTING FIRE PROOFING WAS REMOVED TO EXPOSE EXISTING STEEL FOR NEW HANGER INSTALLATION. REFER TO SPECIFICATION SECTION FIRE PROOFING.
27. LOCATIONS INDICATED FOR LOCAL WALL SWITCHES ARE SUBJECT TO MODIFICATIONS. AT OR NEAR DOORS, INSTALL SWITCH ON SIDE OPPOSITE HINGE (VERIFY FINAL DOOR HINGE LOCATION IN THE FIELD PRIOR TO SWITCH OUTLET INSTALLATION).
28. EXACT LOCATION OF LIGHTING FIXTURES SHALL BE IN ACCORDANCE WITH ARCHITECTURAL REFLECTED CEILING PLAN OR AS DIRECTED BY THE ARCHITECT.
29. THE ELECTRICAL CONTRACTOR SHALL COORDINATE ALL CEILING WORK WITH CEILING CONTRACTOR AND DETERMINE CEILING TYPE PRIOR TO THE PURCHASING AND INSTALLATION OF LIGHTING FIXTURES, SPEAKERS, SMOKE DETECTORS, EXIT LIGHTS, OR ANY OTHER CEILING MOUNTED ELECTRICAL ELEMENTS. THE ELECTRICAL CONTRACTOR SHALL ALSO COORDINATE ALL ELECTRICAL WORK WITH LOCATION OF DIFFUSERS AND SPRINKLERS AND OTHER MECHANICAL WORK.
30. EXACT LOCATION AND MOUNTING OF LIGHTING FIXTURES IN MECHANICAL AREAS SHALL BE COORDINATED WITH THE MECHANICAL TRADES TO AVOID CONFLICT WITH PIPING, DUCTS AND EQUIPMENT. COORDINATE ALIGNMENT WITH PROJECT ARCHITECT IN THE FIELD.
31. LOCATIONS OF OUTLETS AND SWITCHES IN FINISHED ROOMS SHALL BE VERIFIED WITH ARCHITECTURAL DRAWINGS OF INTERIOR DETAILS AND FINISHES. IN CENTERING OUTLETS AND LOCATING BOXES AND OUTLETS, ALLOW FOR OVERHEAD PIPES, DUCTS AND MECHANICAL EQUIPMENT, VARIATIONS IN FIREPROOFING AND PLASTERING, WINDOW AND DOOR TRIMS, PANELING, SUSPENDED CEILINGS AND THE LIKE. CORRECT ANY INACCURACY RESULTING FROM FAILURE TO DO SO WITHOUT ANY ADDITIONAL EXPENSE TO THE OWNER.
32. ALL RACEWAYS, WIRING, AND ASSOCIATED ELECTRICAL EQUIPMENT SHALL BE ROUTED CONCEALED EXCEPT IN UNFINISHED AREAS.
33. ALL EQUIPMENT, MATERIALS, ETC. SHALL BE SUBMITTED TO ENGINEER FOR APPROVAL. REFER TO SPECIFICATIONS FOR ADDITIONAL ACTION SUBMITTAL AND SHOP DRAWING REQUIREMENTS.
34. PRIOR TO CONSTRUCTION, COORDINATE WITH LOCAL AHJ FOR THE UL CONDITIONAL LISTING REQUIREMENTS FOR ALL JUNCTIONS BOXES UTILIZED IN RATED WALLS AND CEILINGS.
35. WHERE CONFLICTS EXIST BETWEEN THE INFORMATION INCLUDED IN THESE DRAWINGS OR BETWEEN INFORMATION PROVIDED IN THESE DRAWINGS AND THE PROJECT SPECIFICATIONS OR WITHIN THE PROJECT SPECIFICATIONS, THE MORE STRINGENT AND/OR HIGHEST COST REQUIREMENTS SHALL APPLY. SHOULD THE CONTRACTOR REQUIRE FURTHER CLARIFICATION, AN RFI SHALL BE SUBMITTED FOR CLARIFICATION. WHERE CONFLICTS DO EXIST, THE PROJECT ENGINEER OF RECORD SHALL HAVE THE SOLE DISCRETION AND RIGHT TO PROVIDE INTERPRETATION OF INTENT OF THE CONTRACT DOCUMENTS AS REQUIRED AND THIS INTERPRETATION SHALL SERVE TO DIRECT THE CONTRACTOR IN ACCORDANCE WITH THE IMPLIED INTENT OF THE CONSTRUCTION DOCUMENTS WITHOUT ADDITIONAL COST TO THE PROJECT.
36. CONTRACTOR SHALL INCLUDE CONTINGENCY IN BID PRICE TO ALLOW FOR MODIFICATION OR ADDITION OF ELECTRICAL DEVICES (LIGHTING, FIRE ALARM, POWER, SWITCHING, OCCUPANCY SENSORS, ETC.) BASED UPON THE REQUIREMENTS OF THE LOCAL INSPECTOR (AHJ). THE LOCAL INSPECTOR (AHJ) HAS THE AUTHORITY TO REQUIRE DEVICES TO BE ADDED, MODIFIED, OR RELOCATED BASED UPON HIS OPINION OF THE SPECIFIC INSTALLATION, EVEN IF THE BUILDING DEPARTMENT APPROVED THE PLANS WITHOUT COMMENTS. CONTRACTOR SHALL PROVIDE FOR ADDITIONAL, MODIFICATION, AND/OR RELOCATION OF ALL DEVICES REQUIRED BY THE INSPECTOR WITHOUT ADDITIONAL COST TO THE OWNER.

genesis engineering group, llc.
2601 Cattleman Rd, Suite 501
sarasota, fl 34232
project #18-051
coa #29304
www.geneng.net

FleischmanGarcia
ARCHITECTURE • PLANNING • INTERIOR DESIGN
SAFETY HARBOR OFFICE
195 FOURTH AVENUE NORTH
SAFETY HARBOR, FLORIDA 34695
PHONE (727) 725-8880
FAX (727) 725-3900
TAMPA OFFICE
324 HYDE PARK AVENUE, SUITE 300
TAMPA, FLORIDA 33606
PHONE (813) 251-4400
FAX (813) 251-1994
SARASOTA OFFICE
5967 CATTLEMEN LANE, SUITE 6
SARASOTA, FLORIDA 34232
PHONE (941) 342-9293
FAX (941) 342-9253
REGISTRATION NUMBER AA C000123

NEW TAMPA RECREATION CENTER ADDITION
TAMPA, FL 33647

THIS DESIGN AND DRAWING IS THE SOLE PROPERTY OF FLEISCHMANGARCIA. NO PART OF THIS WORK MAY BE REPRODUCED WITHOUT PRIOR WRITTEN PERMISSION FROM FLEISCHMANGARCIA.

I CERTIFY TO THE BEST OF MY KNOWLEDGE THAT THESE DRAWINGS COMPLY W/ ALL RELEVANT BUILDING CODES

FGA PROJECT NUMBER
18015

ISSUE DATE
11/07/18

SHEET NUMBER
E0.1

11-12-18 Benito Verzosa \2018\18-051-FL New Tampa Rec Center Electrical\CAD\Electrical\18-051-FL New Tampa Rec Center - Electrical.dwg

LOW VOLTAGE SYSTEMS GENERAL NOTES

THE OWNER LOW VOLTAGE SYSTEMS' (TELEPHONE, DATA, EQUIPMENT RACK AND CABINET, WIRELESS ACCESS POINT, CABLE TV, MUSIC, COMPUTER/PRINTER, SOUND/PUBLIC ADDRESS SYSTEM, ELECTRONIC SECURITY SYSTEMS (INTRUSION DETECTION SYSTEM, CARD ACCESS & CCTV), PROJECTION SCREEN, AUDIO/ VISUAL, FIRE ALARM, ETC.) SUBCONTRACTOR SHALL PROVIDE COMPLETE SET OF EACH SYSTEM SHOP DRAWINGS SUBMITTALS REFLECTING A FULLY-FUNCTIONAL INSTALLATION AS PER OWNER REQUIREMENTS AND SPECIFICATIONS AFFECTED BY THIS NEW DEMOLITION AND RENOVATION WORK. BIDS SHALL BE BASED UPON SUCH A SYSTEM, CHANGE ORDERS FOR ADDITIONAL REQUIRED COMPONENTS AND WIRING NOT SHOWN IN EACH SYSTEM SHOP DRAWING PLANS WILL NOT BE APPROVED. THE LOW VOLTAGE SYSTEMS SUBCONTRACTOR SHALL COORDINATE WITH OWNER'S REPRESENTATIVE FOR THE EXACT LOW VOLTAGE SYSTEMS REQUIREMENTS AND SPECIFICATIONS AFFECTED BY THIS NEW DEMOLITION AND RENOVATION WORK PRIOR TO BIDDING AND COMMENCING ANY WORK IN THIS SITE. ELECTRICAL CONTRACTOR SHALL PROVIDE ROUGH-IN INSTALLATION OF OUTLET BOXES, PULLBOXES, EMPTY CONDUITS WITH PULLSTRINGS, ETC. AND 120V BRANCH CIRCUIT WIRING CONNECTION AS REQUIRED PER FINAL APPROVED LOW VOLTAGE SYSTEMS SHOP DRAWINGS SUBMITTALS. EC SHALL COORDINATE ALL WORK WITH LOW VOLTAGE SYSTEMS SUBCONTRACTOR FOR THE EXACT ELECTRICAL REQUIREMENTS PRIOR TO START OF CONSTRUCTION.

EXPANSIONS/MODIFICATIONS TO EXISTING SYSTEMS:

1. PROVIDE ALL NEW COMPONENTS, ETC. TO MATCH EXISTING LOW VOLTAGE SYSTEMS MANUFACTURER AND SYSTEM TYPE AS REQUIRED PER OWNER BUILDING FACILITY STANDARD REQUIREMENTS AND SPECIFICATIONS.
2. PROVIDE ALL EXPANSIONS, MODIFICATIONS, PROGRAMMING, TESTING, ETC. TO ACCOMMODATE EXPANSIONS/MODIFICATIONS TO EXISTING SYSTEMS AS INDICATED ON THE FINAL APPROVED LOW VOLTAGE SYSTEMS SHOP DRAWINGS SUBMITTALS.
3. COORDINATE ALL WORK WITH LOW VOLTAGE SYSTEMS CONTRACTOR, SYSTEMS MANUFACTURER, VENDOR, AND SERVICE PROVIDERS.

NOTE: LOW VOLTAGE SYSTEMS SHOP DRAWINGS ARE NOT AVAILABLE AT THIS TIME. THE THREE (3) SETS OF LOW VOLTAGE SYSTEMS SHOP DRAWINGS WILL BE SUBMITTED TO QUORUM SERVICES FOR REVIEW AND BEFORE INSTALLATION OF THE LOW VOLTAGE SYSTEMS. ONCE THE LOW VOLTAGE SYSTEMS PLANS HAVE BEEN APPROVED BY QUORUM SERVICES, THE LOW VOLTAGE SYSTEMS CONTRACTOR WILL NEED TO SUBMIT THE PLANS APPROVED BY QUORUM SERVICES ALONG WITH A PERMIT APPLICATION TO THE LOCAL COUNTY BUILDING PERMIT DIVISION AS A REVISION TO THE BUILDING PERMIT.

LIGHTING SYSTEM FUNCTIONAL TESTING

BEFORE FINAL INSPECTION A FACTORY CONTROL CONSULTANT SHALL PROVIDE EVIDENCE THAT LIGHTING CONTROLS HAVE BEEN TESTED, CALIBRATED, ADJUSTED, PROGRAMMED AND ARE IN WORKING CONDITION.

- TEST OCCUPANCY SENSORS RESPONSIVENESS.
- TEST OCCUPANCY SENSORS FOR DELAYED AUTOMATIC TIME OFF.
- TEST AUTO TIMECLOCK PROPER OPERATION IN LIGHTING CONTROL PANEL.
- TEST LOW VOLTAGE SWITCHES FOR PROPER OPERATION.

PROVIDE OWNER DOCUMENTS CERTIFYING LIGHTING CONTROLS MEET PERFORMANCE CRITERIA WITHIN 90 DAYS AFTER CERTIFICATE OF OCCUPANCY.

ELECTRICAL SPECIFICATIONS AND GENERAL NOTES

1. ALL ELECTRICAL WORK AND MATERIAL SHALL BE NEW AND PROVIDED BY THE CONTRACTOR. THE WORK, APPARATUS AND MATERIALS WHICH SHALL BE FURNISHED UNDER THE ELECTRICAL SPECIFICATIONS AND ACCOMPANYING DRAWINGS SHALL INCLUDE ALL ITEMS SPECIFIED HEREINAFTER AND SHOWN ON THE DRAWINGS. ALL OTHER MATERIALS NECESSARY FOR THE COMPLETE INSTALLATION SHALL BE FURNISHED AND INSTALLED BY THE CONTRACTOR. CONTRACTOR TO PROVIDE COMPLETE ELECTRICAL SYSTEMS AS INDICATED ON THE DRAWINGS AND SPECIFICATIONS.

2. THE ELECTRICAL DRAWINGS ARE SCHEMATIC IN NATURE, BEFORE STARTING THE WORK THE CONTRACTOR SHALL REVIEW ALL OTHER DISCIPLINE DRAWINGS AND VERIFY FIELD CONDITIONS AND SHALL MAKE ANY REQUIRED MINOR ADJUSTMENTS WITHOUT EXTRA COST TO THE OWNER. ANY MAJOR DISCREPANCIES FOUND SHALL BE BROUGHT IMMEDIATELY TO THE ATTENTION OF THE GENERAL CONTRACTOR (GC).

3. CONTRACTOR SHALL EXTEND THE SERVICE FROM THE POINT OF SERVICE ATTACHMENT FURNISHING ALL PROTECTIVE DEVICES, CONDUCTORS, SUPPORTS, RACEWAYS, ETC. TO PROVIDE COMPLETE ELECTRICAL SYSTEMS TO SERVE MOTOR LOADS, LIGHTING LOADS AND MISCELLANEOUS ELECTRICAL LOADS, AS SHOWN ON THE DRAWINGS AND AS SPECIFIED HEREINAFTER. THE WORK SHALL INCLUDE COMPLETE TESTING OF ALL EQUIPMENT AND WIRING AT THE COMPLETION OF THE WORK AND MAKING ANY MINOR CONNECTION CHANGES OR ADJUSTMENTS NECESSARY FOR THE PROPER FUNCTIONING OF ALL SYSTEMS AND EQUIPMENT. ALL WORKMANSHIP SHALL BE OF THE HIGHEST QUALITY AND NO SUBSTANDARD WORK WILL BE ACCEPTED.

4. CONTRACTOR SHALL REFER TO INTERIOR ARCHITECTURAL DRAWINGS FOR EXACT MOUNTING HEIGHTS AND/OR LOCATIONS OF ALL LIGHTING FIXTURES SWITCHES, OUTLETS AND WIRING DEVICES AND SHALL PERFORM ALL WORK NOTED ON PLANS, IN NOTES OR IN DETAILS RELATED TO ELECTRICAL HORIZONTAL MOUNT WHERE DIRECTED BY ARCHITECT. COORDINATE WITH MILLWORK CONTRACTOR AND OTHER TRADES PRIOR TO COMMENCING ANY WORK.

5. ALL WORK SHALL BE PERFORMED DURING TIME PERIODS ACCEPTABLE TO THE BUILDING FACILITY PROJECT MANAGER. SCHEDULE ALL WORK WITH THE GC BEFORE PROCEEDING.

6. UPON COMPLETION OF THE WORK, THE CONTRACTOR SHALL ENSURE THAT ALL SYSTEMS OPERATE AS DESIGNED AND SHALL REVIEW THEIR OPERATION WITH THE GC AND THE OWNER PERSONNEL. COMPLETE SET OF AS-BUILT DRAWINGS SHALL BE COMPILED BY THE CONTRACTOR AND ISSUED TO THE GC AND ARCHITECT UPON COMPLETION OF CONSTRUCTION AND TESTING.

7. THE CONTRACTOR SHALL MEET AT THE SITE AND COORDINATE ALL REQUIRED POWER SERVICE CONNECTION WITH THE LOCAL UTILITY POWER COMPANY AND LOW VOLTAGE SYSTEMS WITH THE LOCAL PROVIDER IN THIS AREA PRIOR TO CONSTRUCTION. AT THAT TIME, THE CONTRACTOR SHALL COORDINATE ALL RELATED WORK WITH THE UTILITY COMPANY'S RESPONSIBILITIES TO MEET THE OWNER'S SCHEDULE.

8. ALL ELECTRICAL CONDUCTORS SHALL BE INSTALLED IN AN APPROVED RACEWAY, EMT, RIGID GALVANIZED CONDUIT OR SCHEDULE 40 P.V.C. MAXIMUM NUMBER OF 120V CIRCUITS ALLOWED IN A COMMON CONDUIT SHALL BE FOUR (4). THE CONTRACTOR SHALL STRICTLY CONFORM TO THE N.E.C. REQUIREMENTS OF DERATING FOR CONDUCTOR AMPACITY AND CONDUIT FILL. NO CONDUITS SHALL BE INSTALLED, EXPOSED ON ROOF.

9. CONDUCTORS SHALL BE COLOR CODED AS FOLLOWS:

208V SYSTEM	PHASE SEQUENCE
NEUTRAL - WHITE	ABC, TOP TO BOTTOM
PHASE A - BLACK	LEFT TO RIGHT, FRONT
PHASE B - RED	TO BACK
PHASE C - BLUE	
GRD.CON - GREEN	

10. ALL WORK SHALL BE PERFORMED BY A LICENSED ELECTRICAL CONTRACTOR IN A FIRST-CLASS WORKMANLIKE MANNER. THE COMPLETED ELECTRICAL SYSTEMS ARE TO BE FULLY OPERABLE AND ACCEPTABLE TO THE GC, ARCHITECT AND ENGINEER OF RECORD.

11. IT IS NOT THE INTENT OF THESE PLANS TO SHOW EVERY MINOR DETAIL OF CONSTRUCTION. THE CONTRACTOR IS EXPECTED TO FURNISH AND INSTALL ALL ITEMS FOR A COMPLETE ELECTRICAL SYSTEM, AND PROVIDE ALL NECESSARY DEVICES AND COMPONENTS FOR EQUIPMENT TO BE PLACED IN PROPER WORKING ORDER.

12. MATERIALS AND INSTALLATION, AS A MINIMUM, ARE TO CONFORM WITH ALL KEY CODES AND STANDARDS AS INDICATED ON SHEET E-0.0. EQUIPMENT AND DEVICES WHERE APPLICABLE, WILL BE LISTED WITH THE UNDERWRITERS LABORATORIES, INC. QUALITY AND WORKMANSHIP ESTABLISHED BY THE DRAWINGS AND SPECIFICATIONS ARE NOT TO BE REDUCED BY THE ABOVE MENTIONED KEY CODES AND STANDARDS.

13. ALL WORK SHALL BE COORDINATED WITH OTHER TRADES TO AVOID INTERFERENCE WITH THE PROGRESS OF CONSTRUCTION.

14. CONTRACTOR SHALL GUARANTEE ALL MATERIALS AND WORKMANSHIP FREE FROM DEFECTS FOR PERIOD OF NOT LESS THAN ONE (1) YEAR FROM DATE OF ACCEPTANCE. CORRECTION OF ANY DEFECTS TO BE COMPLETED WITHOUT ADDITIONAL CHARGE AND TO INCLUDE REPLACEMENT OR REPAIR OF ANY OTHER PHASE OF THE INSTALLATION WHICH MAY HAVE BEEN DAMAGED THEREBY.

15. ALL CONDUCTORS SHALL BE IN CONDUIT, UNLESS OTHERWISE NOTED. MINIMUM CONDUIT SIZE SHALL BE 3/4". MINIMUM CONDUCTOR SIZE SHALL BE #12 AWG. ALL BRANCH CIRCUITS SHALL BE PROVIDED WITH AN INDIVIDUAL NEUTRAL AND GROUNDING CONDUCTOR WITH THE PHASE CONDUCTORS. ALL CONDUCTORS SHALL BE COPPER WITH THWN/THHN INSULATION. CONDUCTORS #10 AND SMALLER MAY BE SOLID; ALL THOSE #8 AND LARGER TO BE STRANDED.

16. A SEPARATE, GREEN TYPE THWN/THHN COPPER EQUIPMENT GROUND CONDUCTOR SHALL BE RUN FROM GROUND LUG OF EACH GROUNDED RECEPTACLE TO AN APPROVED CONNECTION INSIDE THE ENCLOSING STEEL OUTLET BOX. DEVICE MOUNTING SCREWS SHALL NOT BE CONSIDERED AN APPROVED GROUND.

17. A SEPARATE GROUND CONDUCTOR SHALL BE INSTALLED IN EVERY CONDUIT AND RACEWAY AND SECURELY BONDED IN AN APPROVED GROUNDING TERMINAL AT BOTH ENDS OF THE RUN. THE GROUNDING CONDUCTOR SHALL BE SIZED IN ACCORDANCE WITH TABLE 250.122 OF THE NEC. CONTRACTOR SHALL SIZE CONDUIT TO ACCOMMODATE ADDITIONAL CONDUCTOR(S).

18. ALL UNDERGROUND RACEWAYS SHALL BE MINIMUM 3/4", GALVANIZED RIGID STEEL CONDUIT OR SCHEDULE 40 PVC. ALL OTHER RACEWAYS TO COMPLY WITH GOVERNING CODES. WHERE RIGID STEEL IS USED, IT SHALL BE COMPLETELY COATED WITH AN ALKALI AND RUST RESISTANT BITUMASTIC PAINT, AND THREADS SHALL BE COATED WITH ZINC CHROMATE. RIGID STEEL SHALL ALSO BE USED WHEN CONDUIT IS EXPOSED TO EXTERIOR ENVIRONMENT SUCH AS EXTERIOR OF BUILDING OR WHERE IT IS EXPOSED AND SUBJECT TO DAMAGE, INSIDE OF BUILDING.

19. ALL UNDERGROUND SERVICE CONDUITS/RACEWAYS ENTERING THE BUILDING OR STRUCTURE FROM OUTSIDE TO INSIDE SHALL BE SEALED, INCLUDING SPARE CONDUITS. SEALANT SHALL BE SUITABLE FOR THIS USE.
NOTE: PROVIDE APPROVED BLOCK OPENING, SIZE AS REQUIRED, FOR ALL CONDUITS ENTERING THE BUILDING. COORDINATE WITH THE PROJECT STRUCTURAL ENGINEER FOR EXACT SIZE, LOCATION AND QUANTITY OF BLOCK OPENING PRIOR TO COMMENCING ANY WORK.

20. ALL UNDERGROUND PVC CONDUIT RUNS SHALL HAVE RIGID STEEL ELBOWS AND RIGID STEEL SECTIONS ABOVE AT SLAB PENETRATIONS WHERE SUBJECT TO POSSIBLE DAMAGE.

21. OUTLET BOXES SHALL BE PRESSED STEEL IN DRY LOCATIONS, CAST ALLOY WITH THREADED HUBS IN WET OR DAMP LOCATIONS, AND BE OF SPECIAL CONSTRUCTION FOR OTHER CLASSIFIED AREAS. ALL BOXES SHALL BE RECESSED (FLUSH) IN WALLS OR CEILINGS WHEREVER POSSIBLE.

22. DISCONNECT SWITCHES SHALL BE H.P. RATED, HEAVY DUTY, QUICK-MAKE, QUICK-BREAK TYPE. ENCLOSURES SHALL BE AS REQUIRED BY NEC AND LOCATION (WEATHERPROOF, EXPLOSION PROOF, ETC.). ENGRAVED LAMINATED PLASTIC IDENTIFICATION PLATES SHALL BE FURNISHED AND INSTALLED ON ALL PANELS, DISCONNECT SWITCHES, CONTACTORS, MOTOR STARTERS AND ALL OTHER ELECTRICAL EQUIPMENT.

23. ALL FUSES FOR SAFETY SWITCHES SHALL BE DUAL ELEMENT, CARTRIDGE TYPE. FUSES SHALL MATCH EXISTING FUSES LOCATED AT THE NEARBY EXISTING BUILDING. THE CONTRACTOR SHALL FURNISH TO THE GOVERNMENT ONE SPARE FUSE FOR EACH SIZE AND TYPE OF FUSE INSTALLED. FUSES 600 AMPS OR LESS SHALL BE CLASS RK1, TYPICAL UNLESS OTHERWISE NOTED. FUSES OVER 600 AMPS SHALL BE CLASS L.

24. ALL GENERAL PURPOSE SWITCHES, RECEPTACLES, COVER PLATES, ETC. SHALL BE THE PRODUCT OF A SINGLE MANUFACTURER AS PER OWNER FACILITY STANDARD REQUIREMENTS AND SPECIFICATIONS.
NOTE: ALL OTHER REQUIRED DEVICES SHALL MATCH IN COLOR AND STYLE.

25. ALL ELECTRICAL EQUIPMENT AND DEVICES SHALL BE MOUNTED AS PER EQUIPMENT AND DEVICE MANUFACTURER RECOMMENDATIONS.

26. ALL JUNCTION BOXES TO BE DESIGNATED WITH PERMANENT MARKER INDICATING PANELBOARD AND CIRCUIT NUMBERS OF BRANCH CIRCUIT WIRING CONTAINED WITHIN.

27. GROUND RODS SHALL BE 3/4" DIAMETER, TEN (10) FEET LONG COPPERCLAD STEEL. OBTAIN TWENTY FIVE (25) OHMS MAXIMUM RESISTANCE AS READ WITH A GROUNDING RESISTANCE TESTER, USING TWO REFERENCE RODS. IF TWENTY FIVE (25) OHMS CANNOT BE ACHIEVED, CONTRACTOR SHALL PROVIDE ADDITIONAL RODS, UNTIL TWENTY FIVE (25) HAS BEEN OBTAINED.

28. INSTALL LABEL TAGS ON ALL WIRE AND CABLE IN JUNCTION BOXES AND WIRING GUTTERS OF PANELBOARDS. TAGS SHALL IDENTIFY WIRE OR CABLE CIRCUIT NUMBER AND/OR EQUIPMENT SERVED AS SHOWN ON THE DRAWINGS.

29. LOAD DATA IS BASED ON INFORMATION GIVEN TO THE ENGINEER AT THE TIME OF DESIGN. FIELD VERIFY ALL EQUIPMENT NAMEPLATE RATINGS BEFORE ORDERING.

30. CIRCUITS SHOWN ON PLANS ARE TO DETERMINE LOAD DATA AND PANELBOARD SIZES. THE CONTRACTOR IS TO PROVIDE CIRCUITS AND ROUTING OF CONDUITS TO SUIT JOB CONDITIONS.

31. FURNISH AND INSTALL DISCONNECT SWITCHES, WIRING, AND CONNECTIONS ON ALL HVAC SYSTEM AS SHOWN ON PLANS, UNLESS OTHERWISE NOTED. ELECTRICAL CONTRACTOR SHALL VERIFY AND COORDINATE WITH MECHANICAL CONTRACTOR REGARDING SUPPLY AND INSTALLATION OF ALL REQUIRED CONTROLS IN CONDUITS.

32. THE DISCONNECT SWITCH, FUSE SIZES, CONDUIT AND WIRE SHOWN FOR ALL HVAC ARE SIZED PER THE MANUFACTURER, AND MODEL NUMBER LISTED ON THE MECHANICAL PLANS. IF THERE IS AN EQUAL MANUFACTURER, OR OTHER MANUFACTURER PROVIDED, THE MECHANICAL GENERAL CONTRACTOR SHALL BEAR ANY ADDITIONAL COST INCURRED IF THE ELECTRICAL IS NOT EQUAL TO THE SPECIFICATIONS.

33. ALL DISTRIBUTION PANELBOARDS, PANELBOARDS, STARTERS, CONTACTORS, ETC., SHALL BE THE PRODUCT OF A SINGLE MANUFACTURER. ALL PANELBOARDS SHALL HAVE BOLT-ON TYPE CIRCUIT BREAKERS AND FULLY RATED. TANDEM AND HALF-SPACE CIRCUIT BREAKERS SHALL NOT BE USED.

34. TYPEWRITTEN CIRCUIT INDEX SHALL BE AFFIXED TO INSIDE SURFACE OF EACH PANELBOARD DOOR, CLEARLY INDICATING AREA AND TYPE OF LOAD SERVED BY EACH BRANCH CIRCUIT PROTECTIVE DEVICE, INCLUDING SPARES. HAND PRINTED DIRECTORIES WILL NOT BE ACCEPTED.

35. ENGRAVED, LAMINATED PLASTIC IDENTIFICATION PLATES SHALL BE FURNISHED AND INSTALLED ON ALL PANELBOARDS, DISCONNECT SWITCHES, ETC. PLATES SHALL BE AFFIXED TO FRONT OF PANELS, INDICATING PANEL NAME, VOLTAGE AND AMPERAGE.

36. PROVIDED LAMINATED PLASTIC NAMEPLATES FOR EACH EQUIPMENT ENCLOSURE. EACH NAMEPLATE IDENTIFY EQUIPMENT FUNCTION, PANELBOARD CONNECTED AND CIRCUIT NUMBER. NAMEPLATE SHALL BE MELAMINE PLASTIC (0.125 INCHES THICK), WHITE LETTERS ON BLACK BACKGROUND. MINIMUM SIZE OF LETTERS SHALL BE 2.5 INCHES. IN ADDITION TO EQUIPMENT TAGGING, CONTRACTOR SHALL PROVIDE ARC-FLASH WARNING SIGNS FOR ALL ELECTRICAL EQUIPMENT AS PER MANUFACTURER REQUIREMENTS AND SPECIFICATIONS.
NOTE: ALL NAMEPLATE CONNECTED TO THE EMERGENCY GENERATOR SHALL BE WHITE LETTERS ON RED BACKGROUND.

37. PROVIDE COMPUTER PRINTED ON WHITE WRAPAROUND PAPER WITH CLEAR PLASTIC PROTECTION TAIL FOR ALL WIRE MARKERS. MARKER SHALL STATE PANELBOARD NAME AND CIRCUIT NUMBER ON ALL WIRES IN JUNCTION/PULL BOXES AND IN EQUIPMENT TERMINAL BOXES.

38. PROVIDE PUNCHED TAPE LABELS ON ALL WIRING DEVICES FOR IDENTIFICATION. IT SHALL BE 1/2" BLACK TAPE WITH WHITE RAISED LETTERS. TAPE LABELS SHALL STATE PANELBOARD NAME AND CIRCUIT NUMBER. NOTE: RED TAPE WITH WHITE RAISED LETTERS FOR OTHERS CONNECTED TO EMERGENCY POWER.

39. BALANCE ALL LOADS ON EACH PANELBOARD WITHIN 10%.

40. ALL MATERIALS AND EQUIPMENT TO BE INSTALLED SHALL BE NEW AND FREE OF DEFECTS. ALL ELECTRICAL EQUIPMENT SHALL COMPLY WITH NATIONAL ELECTRICAL MANUFACTURERS ASSOCIATION (NEMA) STANDARDS AND SHALL BE UL LABELED. ALL ELECTRICAL EQUIPMENT AND MATERIALS SHALL BE INSTALLED IN A WORKMANLIKE MANNER.

41. PROVIDE INSULATION AND CONTINUITY TEST OF ALL 1000V AND LESS WIRES AND CABLES PER ELECTRICAL SPECIFICATIONS.

42. CONTRACTOR SHALL BE RESPONSIBLE FOR SEALING ALL CONDUIT PENETRATIONS MADE THROUGH FIRE RATED WALLS, CEILINGS, SLABS, ETC. PENETRATION SEALS SHALL BE PER UL ASSEMBLY STANDARDS.

43. PROVIDE STARTUP OF ALL ELECTRICAL SYSTEMS AND COORDINATE WITH THE GC FOR OWNER PERSONNEL STARTUP WITNESSING.

44. CONTRACTOR SHALL PROVIDE COMPLETE SHOP DRAWING SUBMITTALS FOR REVIEW AND APPROVAL OF THE LIGHT FIXTURES, LIGHTING CONTROL PANEL, TERMINAL CABINETS, PANELBOARDS, CIRCUIT BREAKERS, WIRING DEVICES, CONDUCTORS, RACEWAYS, ETC., LOW VOLTAGE SYSTEMS (TELEPHONE, DATA, TELECOM CABINETS, ELECTRONIC SECURITY SYSTEMS (INTRUSIONDETECTION SYSTEM, SECURITY ACCESS CONTROL, SECURITY VIDEO SURVEILLANCE CAMERAS (CCTV)), AUDIO/VISUAL, CABLE TV (CATV) AND OTHER RELATED LOW VOLTAGE SYSTEMS REQUIRED AND SPECIFIED BY THE OWNER WHICH ARE NOT SHOWN IN THE ELECTRICAL PLANS (FIELD VERIFY WITH OWNER REPRESENTATIVE). EACH SEPARATE AND COMPLETE LOW VOLTAGE SYSTEM SHOP DRAWINGS SUBMITTALS SHALL INCLUDE 1/8" FLOOR PLANS WITH DIMENSIONS, LEGEND, ABBREVIATIONS, WIRING DIAGRAMS, RISER DIAGRAMS, GENERAL NOTES, KEYNOTES, BATTERY CALCULATIONS, POWER REQUIREMENTS, HARDWARE, ACCESSORIES INCLUDING ASSOCIATED EQUIPMENT, DEVICES, COMPONENTS, ETC.INCLUDING ALL RELATED DOCUMENTS AND INFORMATION FOR OWNER, GC, ARCHITECT AND ENGINEER OF RECORD TO MAKE A SOUND EVALUATION.

45. THE OWNER RESERVES THE RIGHT TO REVISE THE DRAWING FROM TIME TO TIME TO INDICATE CHANGES IN THE WORK. WHEN REVISED DRAWINGS AND/OR ANY REVISIONS ARE ISSUED, THE CONTRACTOR SHALL EVALUATE THE CHANGES PROMPTLY. BEFORE INSTALLATION OF ANY ITEM OR PERFORMANCE OF THE WORK INDICATED BY THE REVISED DRAWINGS OR REVISIONS. THE CONTRACTOR SHALL NOTIFY THE GC IN WRITING THAT THE REVISED DRAWINGS INVOLVE AN ADDITION OR DEDUCTION OF A SPECIFIC AMOUNT OF MONEY TO THE CONTRACT PRICE. THE CONTRACTOR SHALL NOT PROCEED WITH THE REVISED WORK WITHOUT PRIOR WRITTEN APPROVAL BY THE GC OF THE COST OF THE REVISED WORK.

46. CONTRACTOR SHALL MAINTAIN A COMPLETE SET OF CONTRACT DRAWINGS AT JOB SITE WITH COLORED MARKINGS INDICATING PROGRESS OF WORK. THIS SET OF CONTRACT DRAWINGS IS TO BE SEPARATED FROM AND IN ADDITION TO CONTRACTOR'S CONSTRUCTION SET. EVERY UNIT OF EQUIPMENT, DEVICE, CONDUIT, WIRE, ETC. IS TO BE MARKED WHEN INSTALLED. USE GREEN TO INDICATE INSTALLATION AS SHOWN ON DRAWINGS AND USE RED TO INDICATE FIELD CHANGES. UPON COMPLETION OF WORK, THIS SET OF CONTRACT DRAWINGS IS TO BE TURNED OVER TO, AND BECOME PROPERTY OF THE OWNER.

47. IT IS THE RESPONSIBILITY OF ALL BIDDERS TO THOROUGHLY REVIEW AND UNDERSTAND ALL CONSTRUCTION DOCUMENTS. THIS INCLUDES BUT IS NOT LIMITED TO ALL DRAWINGS, SPECIFICATION SECTIONS, ETC. THE DRAWINGS ARE SCHEMATIC IN NATURE, THEREFORE BEFORE STARTING ANY WORK, THE CONTRACTORS SHALL REVIEW ALL OTHER CONSTRUCTION DOCUMENTS, VERIFY FIELD CONDITIONS AND SHALL MAKE ANY REQUIRED MINOR ADJUSTMENTS WITHOUT EXTRA COST TO THE OWNER. ANY MAJOR DISCREPANCIES FOUND SHALL BE BROUGHT IMMEDIATELY TO THE ATTENTION OF THE ARCHITECT/ENGINEER. THE BASE BID SHALL REFLECT THE TOTAL COST OF NEW EQUIPMENT INSTALLATION, THIS INCLUDES LABOR, ALL ELECTRICAL EQUIPMENT, CONTROLS, LV SYSTEMS, ETC. AND ALL OTHER ASSOCIATED MATERIALS FOR THE CONTRACTORS TO FURNISH AND INSTALL ALL ITEMS FOR A COMPLETE ELECTRICAL SYSTEM, AND PROVIDE ALL NECESSARY DEVICES, COMPONENTS, ETC. FOR ALL EQUIPMENT TO BE PLACED IN PROPER WORKING ORDER. NO CHANGE ORDERS SHALL BE ISSUED WITHOUT WRITTEN CONSENT AND APPROVAL FROM ARCHITECT/ENGINEER AND OWNER.

48. EC SHALL FURNISH AND INSTALL WP DRIP PAN ON TOP OF ALL PANELBOARDS ENCLOSURE AND FIRE ALARM SYSTEM EQUIPMENT ENCLOSURES, ETC. AND PROVIDE WP INSTALLATIONS AS NEEDED.

49. ELECTRICAL CONTRACTOR SHALL NOT ORDER ANY MATERIALS OR START ANY CONSTRUCTION UNTIL THE OWNER REPRESENTATIVE HAS APPROVED ALL RELATED SHOP DRAWINGS SUBMITTALS.

50. ELECTRICAL CONTRACTOR SHALL INSTALL ALL ELECTRICAL EQUIPMENT AND MAINTAIN MOUNTING HEIGHT OF SIX (6) INCHES FROM THE BOTTOM OF ALL EQUIPMENT AND DEVICES TO THE ABOVE BASELINE FLOOD ELEVATION PER STATE AND CITY REGULATORY AGENCIES.

51. IF ELECTRICAL CONTRACTOR HAS QUESTIONS, OR IN THEIR OPINION FINDS OMISSIONS OR ERRORS ON ELECTRICAL DOCUMENTS, IT IS THEIR RESPONSIBILITY TO BRING THIS TO THE ATTENTION OF THE ELECTRICAL ENGINEER/ARCHITECT/OWNER IMMEDIATELY. IF ELECTRICAL CONTRACTOR PROCEEDS WITH ANY CHANGES TO THE CONTRACT DOCUMENTS WITHOUT WRITTEN PRIOR APPROVAL FROM THE ELECTRICAL ENGINEER/ARCHITECT/OWNER WILL NOT BE COMPENSATED.

52. REFER TO THE ELECTRICAL SPECIFICATIONS FOR OTHER REQUIREMENTS AND ANY ADDITIONAL INFORMATION NOT SHOWN IN THE ELECTRICAL PLANS.

genesis engineering group, llc.
2601 Cattleman Rd, Suite 501
sarasota, fl 34232
project #18-051
coa #29304
www.geneng.net

FleischmanGarcia
ARCHITECTURE • PLANNING • INTERIOR DESIGN
SAFETY HARBOR OFFICE
195 FOURTH AVENUE NORTH
SAFETY HARBOR, FLORIDA 34695
PHONE (727) 725-8880
FAX (727) 725-3900
TAMPA OFFICE
324 HYDE PARK AVENUE, SUITE 300
TAMPA, FLORIDA 33606
PHONE (813) 251-4400
FAX (813) 251-1994
REGISTRATION NUMBER AA C000123
SARASOTA OFFICE
5967 CATTLEMEN LANE, SUITE 6
SARASOTA, FLORIDA 34232
PHONE (941) 342-9293
FAX (941) 342-9253

NEW TAMPA RECREATION CENTER ADDITION

TAMPA, FL 33647

THIS DESIGN AND DRAWING IS THE SOLE PROPERTY OF FLEISCHMANGARCIA. NO PART OF THIS WORK MAY BE REPRODUCED WITHOUT PRIOR WRITTEN PERMISSION FROM FLEISCHMANGARCIA.

I CERTIFY TO THE BEST OF MY KNOWLEDGE THAT THESE DRAWINGS COMPLY W/ ALL RELEVANT BUILDING CODES

FGA PROJECT NUMBER 18015

ISSUE DATE 11/07/18

SHEET NUMBER E0.2

11-12-18 Benito Verzosa d:\2018\18-051-FL New Tampa Rec Center Electrical\CAD\Electrical\18-051-FL New Tampa Rec Center - Electrical.dwg

ELECTRICAL SPECIFICATIONS:

1. GENERAL

1.A. GENERAL CONTRACT PROVISIONS APPLY TO THE WORK OF THIS SECTION.

1.B. CODE: COMPLY WITH THE REQUIREMENTS OF THE NATIONAL ELECTRIC CODE (NEC), ALL GOVERNING BUILDING CODES AND ENERGY CODES, NATIONAL FIRE PROTECTION ASSOCIATION (NFPA), UNDERWRITER'S LABORATORIES (UL), AUTHORITIES HAVING JURISDICTION (AHJ), AND ALL APPLICABLE RULES AND REGULATIONS OF LOCAL AND STATE LAWS AND ORDINANCES.

1.C. PROVIDE ALL NECESSARY PERMITS, LICENSES, INSPECTIONS AND APPROVALS AS REQUIRED BY THE UTILITY COMPANY AND LOCAL AHJ. CONTRACTOR IS RESPONSIBLE FOR PAYING ALL ASSOCIATED AND REQUIRED FEES IN CONNECTION WITH THE WORK OF THIS CONTRACT.

1.D. ALL ELECTRICAL MATERIALS, EQUIPMENT, APPLIANCES, ETC. SHALL HAVE THE LISTING OF THE UNDERWRITER'S LABORATORIES, INC., AND SHALL BE TYPES APPROVED BY LOCAL AUTHORITIES HAVING JURISDICTION.

2. UTILITY COORDINATION

2.A. UTILITY COMPANY WHICH SERVICES THE PROJECT SITE IS TAMPA ELECTRIC COMPANY. REFERENCE ELECTRICAL SERVICE ORDER # TBD BY EC.

2.B. COMPLY WITH THE REQUIREMENTS OF THE LOCAL UTILITY COMPANY AND PERFORM ALL REQUIRED COORDINATION WITH UTILITY PRIOR TO PERFORMING WORK.

2.C. PROVIDE ALL EQUIPMENT AS REQUIRED BY UTILITY COMPANY AND IN COMPLIANCE WITH ALL UTILITY COMPANY REQUIREMENTS AND REGULATIONS.

3. WORK INCLUDED

3.A. UNLESS NOTED AS EXISTING OR PROVIDED BY OTHERS, CONTRACTOR SHALL PROVIDE ALL WORK AND MATERIALS SHOWN ON DRAWINGS AND INDICATED WITHIN THESE SPECIFICATIONS.

3.B. ALL MATERIALS PROVIDED SHALL BE NEW AND UNUSED.

3.C. THESE SPECIFICATIONS AND ACCOMPANYING DRAWINGS ARE INTENDED TO SECURE THE PROVISIONS OF ALL MATERIAL AND LABOR NECESSARY FOR THE COMPLETE INSTALLATIONS, TESTED AND READY FOR SERVICE, TOGETHER WITH COMPLETE ELECTRICAL WORK AS CALLED FOR HEREIN AND AS INDICATED ON THE DRAWINGS. WHEN CONFLICTS OCCUR IN THE SPECIFICATIONS OR ON THE DRAWINGS, OR BETWEEN EITHER, THE ITEMS OF GREATER QUANTITY OR HIGHER COST SHALL BE PROVIDED.

3.D. PROVIDE A COMPLETE WIRING SYSTEMS FOR LIGHTING AND POWER INSTALLATION, HVAC, PLUMBING AND SPRINKLER SYSTEMS AND MISCELLANEOUS DEVICES.

3.E. A GENERAL DESCRIPTION OF THE ELECTRICAL WORK INCLUDES, BUT IS NOT LIMITED TO THE FOLLOWING:

3.E.A. RELOCATION AND/OR REMOVAL OF EXISTING ELECTRICAL WORK IN ACCORDANCE WITH DEMOLITION SCHEME, OR AS DIRECTED AND REQUIRED. RESTORATION OF ELECTRICAL SERVICE IN AFFECTED ADJOINING AREAS WHICH ARE TO CONTINUE TO FUNCTION.

3.E.B. REMOVAL AND/OR REINSTALLATION OF EXISTING CONSTRUCTION (CEILINGS, LIGHTING, ELECTRICAL EQUIPMENT, FIRE ALARM DEVICES, FURNISHINGS, ETC.) AS NECESSARY TO COMPLETE THE REMOVALS AND RENOVATION WORK REQUIRED BY THE DRAWINGS AND SPECIFICATIONS. REPLACE ANY ITEMS DAMAGED BY OR DUE TO THIS REMOVAL AND REINSTALLATION WITH NEW ITEMS TO MATCH EXISTING.

3.E.C. TEMPORARY LIGHT AND POWER FOR CONSTRUCTION PURPOSES.

3.E.D. ELECTRICAL SERVICE INSTALLATION.

3.E.E. BRANCH CIRCUIT WIRING, SWITCHES, RECEPTACLES, TELEPHONE AND SIGNAL OUTLETS, AND ALL ASSOCIATED RACEWAYS. UNLESS NOTED OTHERWISE, WIRING, CONDUIT ROUTING, RACEWAYS, ETC. SHALL BE CONCEALED ABOVE ACCESSIBLE CEILINGS, IN WALLS, OR BENEATH FINISHED FLOORS IN ALL FINISHED SPACES. UNLESS NOTED OTHERWISE, DEVICES SHALL BE FLUSH MOUNTED IN ALL FINISHED SPACES.

3.E.F. LIGHTING FIXTURES AND LAMPS.

3.E.G. POWER WIRING TO MECHANICAL EQUIPMENT.

3.E.H. CUTTING AND ROUGH PATCHING REQUIRED TO PERFORM ELECTRICAL WORK, UNLESS NOTED OTHERWISE ON THE DRAWINGS. IN ADDITION, PATCH ALL OPENINGS CREATED BY ELECTRICAL DEMOLITION ACTIVITIES WHICH ARE NOT BEING UTILIZED FOR CONSTRUCTION. PATCH TO MATCH EXISTING ADJACENT SURFACES IN MATERIAL FINISH, TEXTURE, AND COLOR.

3.E.I. FURNISHING AND SETTING OF ALL SLEEVES THROUGH FLOORS, WALLS, WHERE REQUIRED, INCLUDING WATERPROOF AND FIREPROOF SEALING.

3.E.J. FIRE SEALING AROUND ALL BOXES, RACEWAYS, SLEEVES, ETC. WHERE PASSING THROUGH OR PENETRATING CONCRETE SLABS/WALLS AND ALL OTHER FIRE PARTITIONS. FIRE SEAL SHALL BE APPROVED AND INSTALLED IN ACCORDANCE WITH ASTM E814 AND AHJ REQUIREMENTS.

3.E.K. CORE DRILLING ASSOCIATED WITH THE ELECTRICAL WORK.

3.E.L. POWER AND LIGHT DISTRIBUTION SYSTEM

3.E.M. PANELBOARDS.

3.E.N. SAFETY DISCONNECT SWITCHES WHERE REQUIRED, UNLESS FURNISHED WITH STARTERS OR ON EQUIPMENT.

3.E.O. GROUNDING AS REQUIRED BY CODE.

3.E.P. IDENTIFICATION OF EQUIPMENT.

3.E.Q. PRIME PAINTING ELECTRICAL EQUIPMENT AND INSTALLATION COMPONENTS.

3.E.R. FIRE ALARM, SMOKE DETECTION AND SPRINKLER ALARM SYSTEMS.

3.E.S. CABLE SUPPORT AND PULLBOXES.

3.E.T. TELEPHONE AND LOW-VOLTAGE SYSTEM EMPTY CONDUIT SYSTEMS.

3.E.U. WHERE INDICATED, INSTALLATION OF EQUIPMENT FURNISHED BY OTHERS.

3.E.V. HANGERS, ANCHORS, INSERTS, SUPPORTS, SLEEVES, CHASES, ETC. AS REQUIRED TO SECURELY FASTEN ELECTRICAL WORK TO BUILDING STRUCTURE.

3.E.W. STORAGE, RIGGING, SCAFFOLDING AND HANDLING OF ALL MATERIALS AND EQUIPMENT.

3.E.X. TESTS AND INSPECTIONS OF ALL SYSTEMS UNDER THIS SECTION.

3.E.Y. PAYING ALL FEES AND PERFORMING ALL TESTING AND ADJUSTING, AND FURNISHING ALL CERTIFICATES OF APPROVAL.

3.E.Z. AS-BUILT DRAWINGS.

4. RELATED WORK SPECIFIED IN OTHER SECTIONS

4.A. UNLESS NOTED OTHERWISE IN CONTRACT DOCUMENTS, THE FOLLOWING WORK, RELATED TO THIS SECTION, WILL BE FURNISHED AND/OR PERFORMED UNDER OTHER SECTIONS OF THE SPECIFICATIONS, OR BY OTHERS, AND SHALL NOT BE CONSIDERED AS PART OF THE WORK OF THIS SECTION:

4.A.A. FURNISHING MOTOR STARTERS AND ALL CONTROL DEVICES FOR MOTORS AND EQUIPMENT SPECIFIED UNDER OTHER CONTRACTS.

4.A.B. OPENINGS FOR SLEEVES IN WALLS AND FLOOR SLABS.

4.A.C. FINISH PAINTING.

4.A.D. FINISH PAINTING OF EXPOSED CONDUITS, BOXES, HANGERS, APPARATUS, ETC.

4.A.E. TEMPERATURE AND MOTOR CONTROL WIRING, UNLESS OTHERWISE INDICATED ON THE DRAWINGS.

4.A.F. DATA/TELEPHONE SYSTEM CABLES, WIRES, CONNECTIONS, AND INSTRUMENTS.

5. SUBMITTALS/SHIPPING & HANDLING

5.A. SUBMITTAL SHALL INCLUDE MANUFACTURER'S STANDARD DATA, INSTALLATION INSTRUCTIONS AND SPECIFICATIONS.

5.B. SUBMIT SAMPLES FOR EACH ITEM AS REQUIRED.

5.C. SUBMIT SHOP DRAWINGS FOR ALL ITEMS DESCRIBED IN THE CONTRACT DOCUMENTS OR AS MAY BE REQUIRED BY THE ARCHITECT AND/OR ENGINEER INCLUDING (BUT NOT LIMITED TO):

5.C.A. LIGHT FIXTURES

5.C.B. POWER DISTRIBUTION EQUIPMENT (PANELBOARDS, SWITCHES, ETC.)

5.C.C. WIRING DEVICES

5.C.D. RACEWAY AND BOXES

5.C.E. WIRING

5.C.F. FIRE ALARM SYSTEM

5.D. CONTRACTOR IS RESPONSIBLE FOR SHIPPING AND STORING OF ALL MATERIALS. HANDLE PRODUCTS CAREFULLY DURING SHIPPING, STORING, AND INSTALLING. DO NOT INSTALL DAMAGED EQUIPMENT OR COMPONENTS. IN SUCH INSTANCES REPLACE WITH NEW.

6. EXAMINATION OF EXISTING CONDITIONS OF PREMISES

6.A. BEFORE SUBMITTING THE BID, THIS CONTRACTOR SHALL VISIT THE SITE OF THE WORK AND SHALL THOROUGHLY FAMILIARIZE THEMSELVES WITH THE EXISTING CONDITIONS AFFECTING THE WORK. NO EXTRA PAYMENTS WILL BE ALLOWED ON ACCOUNT OF EXTRA WORK MADE NECESSARY BY FAILURE TO DO SO.

6.B. EXAMINE ALL WORK PREPARED BY OTHERS TO RECEIVE THE WORK OF THIS SECTION AND REPORT ANY DEFECTS AFFECTING INSTALLATION TO THE GENERAL CONTRACTOR FOR CORRECTION. COMMENCEMENT OF WORK WILL BE CONSTRUED AS COMPLETE ACCEPTANCE OF PREPARATORY WORK BY OTHERS.

6.C. CONTRACTOR SHALL TEST ALL EXISTING BRANCH CIRCUITS IN EXISTING PANELBOARDS PRIOR TO RE-USING SAID BRANCH CIRCUITS FOR THIS PROJECT. TESTING SHALL BE DONE DURING PREMIUM TIME, UNLESS APPROVED BY BUILDING OWNER AND EXISTING TENANTS.

7. REMOVAL OF EXISTING WORK

7.A. REMOVE AND/OR RELOCATE ALL ELECTRICAL EQUIPMENT, WIRING AND OTHER ELECTRICAL WORK SO INDICATED OR REQUIRED BY REMOVAL OF OR CHANGES IN EXISTING CONSTRUCTION. DISCONNECT LOAD AND LINE ENDS OF CONDUCTORS FEEDING PANELBOARDS, CONTROLLERS, MOTORS, APPLIANCES, AND DEVICES WHICH ARE TO BE REMOVED OR ABANDONED. REMOVE CONDUCTORS FROM EXISTING CONDUITS THROUGH WHICH NEW CONDUCTORS ARE TO BE PULLED. CUT AND CAP FLUSH WITH FLOOR ALL ABANDONED CONDUITS. REMOVE ABANDONED SURFACE MOUNTED CONDUITS. REMOVE MATERIAL AND EQUIPMENT AND DISPOSE OF SAME AS DIRECTED. WHERE ANY FIXTURE OR WIRING DEVICE IS REMOVED, PROVIDE ADEQUATE SIZE AND TYPE OF BLANK COVER PLATE OVER EACH OUTLET.

8. COORDINATION OF WORK WITH OTHERS

8.A. THE WORK OF THIS SECTION SHALL BE COORDINATED WITH THE WORK OF ALL OTHER CONTRACTS, THE UTILITY COMPANY, AND OF THE TELECOMMUNICATIONS COMPANY, AND SHALL BE SO ARRANGED THAT THERE WILL BE NO DELAY IN THE PROPER INSTALLATION AND COMPLETION OF ANY PART OR PARTS OF EACH RESPECTIVE WORK WHEREIN IT MAY BE INTERRELATED WITH THAT OF THIS CONTRACT SO THAT GENERALLY ALL CONSTRUCTION WORK CAN PROCEED IN ITS NATURAL SEQUENCE WITHOUT UNNECESSARY DELAY.

8.B. COORDINATE WORK WITH OTHER TRADES AND ADJUST EQUIPMENT LOCATIONS ACCORDINGLY TO FIT SPACES ALLOTTED.

8.C. ELECTRICAL EQUIPMENT AND DEVICE LOCATIONS SHOWN ARE APPROXIMATE. COORDINATE EXACT MOUNTING LOCATIONS AND HEIGHTS WITH OTHER TRADES AND ARCHITECTURAL ELEVATIONS, PLANS, AND FURNITURE LAYOUTS. VERIFY EXACT EQUIPMENT LOCATIONS PRIOR TO FEEDER ROUGH IN.

8.D. PRIOR TO ROUGH-IN FOR ANY CEILING MOUNTED ELECTRICAL DEVICE OR LIGHT FIXTURE, COORDINATE THE LOCATIONS OF SPRINKLER HEADS WITH PLUMBING CONTRACTOR. ALL CEILING-MOUNTED EQUIPMENT SHALL BE MOUNTED AT A DISTANCE FROM SPRINKLER HEADS THAT MEET NFPA MINIMUM REQUIREMENTS.

9. SHUTDOWNS/UTILITY INTERRUPTIONS

9.A. PLAN INSTALLATION OF NEW WORK AND CONNECTIONS TO EXISTING WORK TO INSURE MINIMUM INTERFERENCE WITH REGULAR OPERATION OF EXISTING FACILITIES. TO INSURE CONTINUOUS OPERATION, MAKE NECESSARY TEMPORARY CONNECTIONS BETWEEN NEW AND EXISTING WORK WHEN SO REQUIRED.

9.B. WHEN INSTALLATION OF A NEW SYSTEM REQUIRES THE TEMPORARY SHUTDOWN OF AN EXISTING OPERATING SYSTEM, THE CONNECTION OF THE NEW SYSTEM SHALL BE PERFORMED AT SUCH TIME AS DESIGNATED BY THE OWNER.

9.C. NOTIFY AND OBTAIN PERMISSION FROM OWNER A MINIMUM OF 48 HOURS IN ADVANCE OF ANY UTILITY INTERRUPTION. COORDINATE ANY UTILITY INTERRUPTIONS WITH ALL OTHER CONTRACTORS.

9.D. WORK SHALL BE ARRANGED FOR CONTINUOUS PERFORMANCE, INCLUDING OVERTIME, AT NO EXTRA COST TO THE OWNER TO ASSURE THAT EXISTING OPERATION SERVICES WILL BE SHUT DOWN ONLY DURING THE TIME ACTUALLY REQUIRED TO MAKE NECESSARY CONNECTIONS.

10. MATERIAL AND WORKMANSHIP

10.A. ALL MATERIAL AND EQUIPMENT SHALL COMPLY WITH ALL ASSOCIATED CODES AND STANDARDS FOR THE INTENDED MATERIAL AND EQUIPMENT. CODES AND STANDARDS INCLUDE, BUT ARE NOT LIMITED TO, NATIONAL ELECTRIC CODE (NEC), UL, NMEA/ICEA, IEEE, AND NFPA.

10.B. ALL MATERIAL SHALL BE NEW AND OF THE BEST QUALITY AND SHALL HAVE THE APPROVED UNDERWRITER'S LABEL ATTACHED. THE LABEL OF APPROVAL SHALL BE OF THE TYPE FOR THE INTENDED APPLICATION. THE WORK THROUGHOUT SHALL BE EXECUTED IN THE BEST AND MOST THOROUGH MANNER UNDER THE DIRECTION OF, AND TO THE SATISFACTION OF, THE OWNER WHO WILL INTERPRET THE MEANINGS OF THE DRAWINGS AND SPECIFICATIONS, AND THE OWNER SHALL HAVE THE POWER TO REJECT ANY WORK AND MATERIALS WHICH, IN THEIR OPINION, IS NOT IN FULL CONFORMANCE THEREWITH.

10.C. IF, AFTER INSTALLATION, OPERATION OF THE EQUIPMENT PROVES TO BE UNSATISFACTORY TO THE OWNER BY REASONS OF DEFECTS, ERRORS OR OMISSIONS, THE OWNER RESERVES THE RIGHT TO OPERATE THE EQUIPMENT UNTIL IT CAN BE REMOVED FROM SERVICE FOR CORRECTION BY THE CONTRACTOR. THE CONTRACTOR SHALL PAY FOR ALL DAMAGES TO WORK OF OTHER TRADES CAUSED BY THIS DEFECTIVE EQUIPMENT AND ITS REPLACEMENT.

10.D. FURNISH WRITTEN GUARANTEE COVERING MATERIAL, OPERATION, AND WORKMANSHIP FOR A PERIOD OF ONE YEAR.

10.E. INSTALL ALL CIRCUITRY PARALLEL OR PERPENDICULAR TO WALLS, FLOOR, AND CEILING.

10.F. REMOVE MATERIALS AS WORK PROGRESSES, UPON COMPLETION OF WORK. LEAVE AREAS IN A CLEAN CONDITION.

10.G. PROVIDE A COMPETENT SUPERINTENDENT WHO SHALL BE IN CHARGE OF THE WORK TO BE INSTALLED UNDER THIS SECTION OF THE SPECIFICATIONS.

11. LABELING

11.A. ALL DEVICE AND EQUIPMENT LABELING SHALL BE TYPEWRITTEN. HANDWRITTEN LABELS WILL NOT BE ACCEPTED.

11.B. ALL DEVICE LABELING SHALL BE TYPEWRITTEN USING A LABEL MAKER AND SHALL BE PERMANENTLY AFFIXED TO EACH FACEPLATE.

11.C. FOR ALL EQUIPMENT PROVIDED UNDER PROJECT, PROVIDE STANDARD PHENOLIC NAMEPLATE WITH 1" MINIMUM SIZE ENGRAVED LETTERING INDICATING LOAD SERVED, POWER SOURCE, VOLTAGE, PHASE, AND CIRCUIT NUMBER. NAMEPLATES SHALL BE WHITE LETTERING ON BLACK BACKGROUND OR AS DIRECTED BY OWNER TO MATCH EXISTING LABELING.

11.D. UPON COMPLETION OF PROJECT, THE CONTRACTOR SHALL PROVIDE TYPEWRITTEN, UP-TO-DATE CIRCUIT BREAKER DIRECTORIES FOR ALL EXISTING PANELBOARDS IMPACTED BY PROJECT TO DESCRIBE NEW EQUIPMENT AND DEFINE THEIR CORRESPONDING CIRCUIT BREAKER.

11.E. UPON COMPLETION OF PROJECT, THE CONTRACTOR SHALL PROVIDE TYPWRITTEN, UP-TO-DATE CIRCUIT BREAKER DIRECTORIES FOR ALL NEW PANELBOARDS PROVIDED UNDER PROJECT.

11.F. EACH RECEPTACLE AND SWITCH PROVIDED OR ALTERED UNDER THIS CONTRACT SHALL BE LABELED WITH THE CORRESPONDING POWER PANEL NAME AND CIRCUIT BREAKER NUMBER.

11.G. ALL JUNCTION BOXES, OUTLET BOXES, PULL BOXES, ETC. SHALL BE CLEARLY LABELED WITH BLACK PERMANENT MAKER IDENTIFYING THE ASSOCIATED PANELBOARD AND CIRCUIT NUMBER.

12. FINAL INSPECTIONS, TESTS, AND CLOSE-OUTS

12.A. UPON COMPLETION OF THE ELECTRICAL INSTALLATION, CONDUCT A LOAD TEST BY TURNING ON ALL ELECTRICAL EQUIPMENT THROUGHOUT THE ENTIRE PROJECT FOR A CONTINUOUS PERIOD. ALTER FUSES, CIRCUIT BREAKERS, CIRCUIT CONNECTION ARRANGEMENTS, ETC. AS REQUIRED TO PERMIT SATISFACTORY PERFORMANCE. LOAD SHALL BE BALANCED WITHIN 5%.

12.B. AT THE TIME OF THE FINAL INSPECTION AND TESTS, ALL CONNECTIONS AT PANELS AND ALL SPLICES, ETC., MUST BE MADE. ALL FUSES MUST BE IN PLACE AND THE CIRCUITS CONTINUOUS FROM SERVICE SWITCHES TO ALL PANELS, RECEPTACLES, OUTLETS, MOTORS, ETC. EACH ENTIRE WIRING SYSTEM MUST TEST FREE FROM ALL SHORT CIRCUITS AND FROM GROUNDS AS REQUIRED BY THE N.E.C..

12.C. AFTER SUBSTANTIAL COMPLETION, PROVIDE OWNER DESIGNATED PERSONNEL WITH INSTRUCTIONS ON INSTALLED SYSTEMS.

12.D. PROVIDE OWNER WITH AN OPERATION AND MAINTENANCE MANUAL FOR EACH INSTALLED SYSTEM.

RACEWAYS AND BOXES FOR ELECTRICAL SYSTEMS

1. UNLESS NOTED OTHERWISE AND AS APPROVED BY THE AHJ, CONDUIT TYPES SHALL BE USED AS FOLLOWS:

1.A. ELECTRICAL METALLIC TUBING (EMT): PROVIDE FOR ALL INTERIOR BRANCH CIRCUITS, UNLESS OTHERWISE INDICATED.

1.B. FLEXIBLE METAL CONDUIT (FMC): PROVIDE FOR FINAL BRANCH CIRCUIT CONDUIT CONNECTION TO RECESSED CEILING LIGHT FIXTURES, 6' MAXIMUM LENGTH.

1.C. LIQUID-TIGHT FLEXIBLE METAL CONDUIT (LFMC): PROVIDE FOR FINAL CIRCUIT CONNECTIONS TO MOTORS AND EQUIPMENT, 6' MAXIMUM LENGTH.

1.D. INTERMEDIATE METAL CONDUIT (IMC): PROVIDE FOR ALL FEEDERS.

1.E. RIGID METAL CONDUIT (RMC): PROVIDE FOR ALL EXTERIOR EXPOSED, RISERS FROM GRADE, INTERIOR/EXTERIOR WET LOCATIONS, AND IN ALL INTERIOR/EXTERIOR AREAS WHERE PHYSICAL DAMAGE MAY OCCUR.

1.F. RIGID POLYVINYL CHLORIDE CONDUIT (PVC): PROVIDE FOR ALL UNDERGROUND EXTERIOR, UNDER-SLAB, AND CONCRETE ENCASED CIRCUITS/FEEDERS. SCHEDULE 80 PVC SHALL BE USED FOR ALL DIRECT-BURY APPLICATIONS. SCHEDULE 40 PVC SHALL BE USED UNDER-SLAB AND CONCRETE ENCASEMENT APPLICATIONS.

2. FITTINGS, SUPPORTS, ACCESSORIES, ETC. SHALL BE SPECIFICALLY DESIGNED FOR ASSOCIATED CONDUIT TYPES AND SHALL BE OF SAME MANUFACTURER OF CONDUIT PROVIDED.

3. MINIMUM RACEWAY SIZE SHALL BE 3/4".

4. PROVIDE PULL CORDS IN ALL CONDUITS/RACEWAYS FOR PULLING OF CABLING/WIRING.

5. RACEWAYS SHALL NOT CROSS PIPE SHAFTS OR VENTILATION DUCT OPENINGS AND SHALL NOT BE ROUTED THROUGH ELEVATOR SHAFTS OR ELEVATOR MACHINE ROOMS UNLESS SPECIFICALLY SERVING ELEVATOR OR ELEVATOR RELATED SYSTEMS.

6. PROVIDE BOXES AND FITTINGS OF TYPES AND SIZES WHICH ARE SUITABLE FOR INSTALLATION. COMPLY WITH PROVISIONS OF NEC FOR BOXES AND FITTINGS.

7. IN ADDITION TO BOXES SHOWN, PROVIDE ADDITIONAL BOXES WHERE REQUIRED TO PREVENT DAMAGE TO CABLES AND WIRES DURING PULLING OPERATIONS.

8. PROVIDE PULL BOXES AFTER EVERY TWO 90 DEGREE BENDS FOR ALL 4" CONDUITS. FOR ALL OTHER CONDUIT SIZES/RUNS PROVIDE PULL BOXES ARE REQUIRED BY NEC. SIZE ALL PULL BOXES PER NEC REQUIREMENTS.

9. PROVIDE ACCESSORIES AS REQUIRED FOR EACH INSTALLATION.

10. COUPLINGS AND CONNECTORS SHALL BE SET-SCREW TYPE.

11. SUPPORT ALL RACEWAYS AND BOXES SECURELY TO BUILDING STRUCTURE.

11.A. FASTEN ELECTRICAL BOXES SECURELY AND RIGIDLY TO STRUCTURAL SURFACES TO WHICH THEY ARE ATTACHED.

11.B. RACEWAYS SHALL BE SUPPORTED WITHIN 3' OF CONNECTION TO EQUIPMENT, BOXES, CABINETS, ETC.

11.C. PROVIDE RACEWAY SUPPORTS PER NEC SUPPORT SPACING REQUIREMENTS.

12. MECHANICALLY JOIN ALL METAL RACEWAYS, ENCLOSURES, AND RACEWAYS FOR CONDUCTORS TO FORM A CONTINUOUS ELECTRICAL CONDUCTOR. CONNECT ALL ELECTRICAL BOXES, FITTINGS AND CABINETS SO AS TO PROVIDE AN EFFECTIVE ELECTRICAL CONTINUITY AND A FIRM MECHANICAL ASSEMBLY.

13. INSTALL RACEWAYS SO THAT REQUIRED CONDUCTORS MAY BE DRAWN IN WITHOUT INJURY OR EXCESSIVE STRAIN TO THE RACEWAY OR CABLE.

14. INSTALL RACEWAYS TO AVOID PROXIMITY TO STEAM AND HOT WATER PIPES. KEEP RACEWAYS A MINIMUM OF 3" FROM SUCH PIPES.

15. KEEP ENDS OF RACEWAYS PLUGGED OR CAPPED DURING CONSTRUCTION. PROVIDE INSULATED BUSHINGS FOR ALL EMPTY CONDUITS AND CONDUIT ENDS.

16. PROVIDE EXPANSION - DEFLECTION FITTINGS IN ALL RACEWAYS PASSING THROUGH STRUCTURAL EXPANSION JOINTS.

17. FEEDERS TO PANELS SHALL BE IN CONDUIT.

18. COMBINING OF CIRCUITS IN SAME RACEWAY, OTHER THAN THOSE INDICATED ON DRAWING SHALL NOT BE PERMITTED.

19. ALL CONDUITS RUN UNDERGROUND OR BENEATH CONCRETE SLAB SHALL COMPLY WITH SET LOCATION REQUIREMENTS OF THE NEC.

20. RACEWAY PENETRATIONS OF FIRE-RATED WALLS AND/OR FLOORS SHALL BE SEALED TO MAINTAIN THE INTEGRITY OF CONSTRUCTION/RATING. ALL PRODUCTS, MATERIALS, AND METHODS OF INSTALLATION SHALL BE UL APPROVED AND MEET NFPA REQUIREMENTS.

CONDUCTORS AND CABLES

1. ALL CONDUCTORS SHALL BE COPPER, UNLESS OTHERWISE INDICATED.

2. ALL BRANCH CIRCUIT WIRING SHALL BE INSULATED COPPER CONDUCTORS (MINIMUM #12 AWG). #12 AWG AND #10 AWG SHALL BE SOLID, #8 AWG AND LARGER SHALL BE STRANDED. BRANCH CIRCUITS LONGER THAN 100' FROM PANEL TO LOAD SHALL BE #10 AWG MINIMUM FOR THE ENTIRE CIRCUIT.

3. UNLESS NOTED OTHERWISE AND AS AS APPROVED BY AHJ, CONDUCTOR (WIRE) TYPES SHALL BE AS FOLLOWS:

3.A. DRY, DAMP, AND WET LOCATIONS: TYPE THHN-THWN OR XHHW-2 WITH INSULATION RATING OF 75° PROVIDED AS CONDUCTORS IN CONDUIT. 90° INSULATION RATING MAY BE USED FOR DRY LOCATIONS ONLY.

3.B. DIRECT BURIAL: TYPE UF OR USE

3.C. THE USE OF AC CABLE, MC CABLE, OR FLEXIBLE METAL CONDUIT IS PERMITTED IN LIEU OF WIRE IN CONDUIT FOR BRANCH CIRCUITS 20A OR LESS IN INTERIOR SPACES. FOR ALL OTHER AREAS AND APPLICATIONS, THE USE OF TYPE AC CABLE, MC CABLE OR FLEXIBLE METAL CONDUIT WITH CONDUCTORS IS NOT PERMITTED, EXCEPT FOR FINAL CONNECTIONS TO LIGHT FIXTURES, HVAC EQUIPMENT, AND OTHER EQUIPMENT/TRANSFORMERS (FINAL FLEXIBLE CONNECTION LENGTH IS LIMITED TO MAXIMUM OF 6'). AC CABLE AND MC CABLE SHALL BE PROVIDED WITH AN INSULATED GREEN EQUIPMENT GROUND CONDUCTOR.

4. ALL CONDUCTORS SHALL BE COLOR CODED AS REQUIRED BY NEC. COLOR CODING SHALL BE BY MEANS OF COLORED INSULATING MATERIAL, COLORED BRAID OR JACKET OVER THE INSULATION, OR BY MEANS OF SUITABLE COLORED, PERMANENT, NON-AGING, INSULATING TAPE APPLIED TO CONDUCTORS AT EACH CABINET OR JUNCTION POINT. THE COLOR CODING SHALL BE ACCOMPLISHED AS TEH CONDUCTORS ARE BEING INSTALLED.

5. DRAWING FEEDER CONDUCTOR SIZES INDICATED ARE COPPER. WHERE APPROVED BY OWNER AND AHJ, ALUMINUM EQUIVALENT FEEDERS MAY BE USED FOR FEEDER SIZES OVER #8 AWG. CONTRACTOR IS RESPONSIBLE FOR PROVIDING EQUIVALENT CONDUCTOR SIZES/TYPES AND ANY ASSOCIATED INCREASE IN CONDUIT SIZE AS REQUIRED BY NEC.

6. CONNECTORS SHALL BE UL LISTED AND PROVIDED WITH APPROPRIATE TEMPERATURE RATINGS.

7. PROVIDE CONNECTORS AND FILLER WHICH ARE COMPATIBLE WITH THE CONDUCTOR MATERIAL. CONNECTORS AND FILLER INCLUDES, BUT ARE NOT LIMITED TO, INDENT-TYPE CONNECTORS, INDENT-TYPE PRESSURE CONNECTORS, SPRING-TYPE CONNECTORS, BOLT-ON PRESSURE CONNECTORS, TWO AND THREE-WAY CONNECTORS, AND FILLER FOR INDENTIONS IN CONNECTOR BODIES.

8. PROVIDE SPLICE KITS AND INSULATION TAPES WITH MECHANICAL STRENGTH AND INSULATION RATING EQUIVALENT OR BETTER THAN CONDUCTORS BEING SPLICED.

9. PRIOR TO ENERGIZING CIRCUITRY, CHECK INSTALLED WIRES AND CABLES WITH MEGOHM METER TO DETERMINE INSULATION RESISTANCE LEVELS AND ENSURE REQUIREMENTS ARE FULFILLED.

10. PRIOR TO ENERGIZING, TEST WIRES AND CABLES FOR ELECTRICAL CONTINUITY AND FOR SHORT CIRCUITS.

GROUNDING AND BONDING FOR ELECTRICAL SYSTEMS

1. THE ENTIRE ELECTRICAL SYSTEM SHALL BE COMPLETELY AND EFFECTIVELY GROUNDED AS REQUIRED BY UL 467 AND NATIONAL ELECTRICAL CODE (NEC).

2. ALL METALLIC RACEWAYS SHALL BE MECHANICALLY AND ELECTRICALLY SECURE AT ALL JOINTS AND AT ALL BOXES, CABINETS, FITTINGS, AND EQUIPMENT. METALLIC RACEWAYS SHALL NOT BE CONSIDERED SOLE MEANS OF GROUNDING.

3. A SEPARATE COPPER CONDUCTOR SHALL BE INSTALLED IN ALL RACEWAYS AS THE EQUIPMENT GROUNDING MEANS. UNLESS NOTED OTHERWISE, GROUNDING CONDUCTOR SHALL BE SIZED PER NEC BASED ON THE SIZE OF THE RESPECTIVE FEEDER OVERCURRENT PROTECTIVE DEVICE. TERMINATE GROUNDING CONDUCTORS ON THE DEVICE/EQUIPMENT GROUND TERMINAL AND ON THE GROUND BUS INSTALLED IN PANELBOARDS, MOTOR CENTERS, ETC.

4. PROVIDE A DEDICATED NEUTRAL CONDUCTOR THE ENTIRE LENGTH OF ALL CIRCUITS. TERMINATE NEUTRAL CONDUCTORS ON THE DEVICE/EQUIPMENT NEUTRAL TERMINAL AND ON THE NEUTRAL BUS INSTALLED IN PANELBOARDS, MOTOR CENTERS, ETC. SHARED NEUTRAL CONDUCTORS ARE NOT PERMITTED.

5. GROUNDING CONNECTIONS:

5.A. EXOTHERMIC WELDING PROCESS: CADWELD OR APPROVED EQUAL

5.B. MECHANICAL COMPRESSION:

5.B.A. TIN-PLATED, HIGH-CONDUCTIVITY PURE ELECTROLYTIC COPPER EXTRUSION FITTINGS.

5.B.B. HYDRAULIC COMPRESSION EQUIPMENT AND DIES AS RECOMMENDED BY MANUFACTURER.

5.B.C. BOLTED CONNECTIONS: HIGH CONDUCTIVITY COPPER FITTINGS WITH CORROSION RESISTANT NUTS AND BOLTS.

6. PROVIDE BONDING FITTINGS AND BONDING JUMPERS TO ASSURE ELECTRICAL CONTINUITY OF THE GROUNDING CIRCUIT OF SERVICE EQUIPMENT AND ENCLOSURES THAT CONTAIN SERVICE CONDUCTORS. SIZE THE BONDING JUMPERS PER NEC BASED UPON THE SIZE OF THE SYSTEM PHASE CONDUCTORS.

7. PROVIDE GROUNDING BUSHINGS ON ALL CONDUIT TERMINATIONS AT PANELBAORDS AND JUNCTIONS BOXES. GROUND BUSHINGS TO EQUIPMENT GROUNDING BUSSES USING AN INSULATED, CONTINUOUS, STRANDED, COPPER CONDUCTOR (#12 AWG MINIMUM).

8. PROVIDE GROUNDING FOR TVSS SERIES FILTER PER MANUFACTURER'S WRITTEN INSTALLATION INSTRUCTIONS AND NEC.

9. TIGHTEN GROUNDING AND BONDING CONNECTORS AND TERMINALS, INCLUDING SCREWS AND BOLTS, IN ACCORDANCE WITH MANUFACTURER'S PUBLISHED TOQUE TIGHTENING VALUES FOR CONNECTORS AND BOLTS.

10. CONTRACTOR SHALL TEST GROUNDING SYSTEM. THE RESISTANCE TO GROUND SHALL NOT BE MORE THAN FIVE (5) OHMS. SUBMIT TEST RESULTS TO ENGINEER. CONTRACTOR SHALL MAKE ALL UPGRADES AND ADDITIONS AS REQUIRED TO ACHEIVE THE FIVE (5) OHM REQUIREMENT.

11. PROVIDE COMPLETE LOW-VOLTAGE/TELECOMMUNICATIONS GROUNDING SYSTEM AS DETAILED ON DRAWINGS AND PER NEC AND ANSI/TIA/EIA REQUIREMENTS. SYSTEM SHALL INCLUDE, BUT IS NOT LIMITED TO, TELECOMMUNICATIONS MAIN GROUNDING BUSBAR, TELECOM BONDING BACKBONE, TELECOM GROUNDING BUSBAR, AND TELECOM BONDING BACKBONE INTERCONNECTING BONDING CONDUCTOR. BOND TO SERVICE ENTRANCE GROUNDING SYSTEM AND STRUCTURAL STEEL.

PANELBOARDS

1. ELECTRICAL PANELS SHALL BE DEAD - FRONT TYPE CONSTRUCTION AND EQUIPPED WITH OVERCURRENT PROTECTIVE DEVICES, AS SCHEDULED ON THE DRAWINGS. THEY SHALL BE COMPLETE WITH CABINET, TRIM, HINGED DOOR, LOCKS (WITH TWO KEYS), AND TYPEWRITTEN DIRECTORY AND SUCH ADDITIONAL FEATURES AND COMPONENTS AS HEREIN SPECIFIED OR SHOWN ON THE DRAWINGS. CONSTRUCTION OF PANELBOARDS SHALL BE IN ALL WAYS SATISFACTORY TO THE ARCHITECT AND/OR ENGINEER AND SUBJECT TO THEIR APPROVAL.

2. PROVIDE PANELBOARDS, ENCLOSURES, AND ANCILLARY COMPONENTS OF TYPES, SIZES, RATINGS INDICATED WHICH COMPLY WITH MANUFACTURER'S STANDARD MATERIALS. DESIGN AND CONSTRUCTION SHALL BE IN ACCORDANCE WITH PUBLISHED PRODUCT INFORMATION. WHERE TYPES, SIZES, OR RATINGS ARE NOT OTHERWISE INDICATED, COMPLY WITH NEC, UL, AND ESTABLISHED INDUSTRY STANDARDS FOR APPLICATIONS INDICATED.

3. PROVIDE KAIC RATING AS INDICATED ON SCHEDULES. PROVIDE FULLY RATED PANELBOARD ASSEMBLY.

4. PROVIDE ASSEMBLIES THAT ARE NATURALLY VENTED AND THAT ARE CONSTRUCTED IN SUCH A MANNER THAT THE TEMPERATURE RISE WITH CIRCUIT BREAKERS INSTALLED DOES NOT CAUSE NUISANCE TRIPPING.

5. BUS BARS:

5.A. PROVIDE PANELBOARDS WITH FACTORY INSTALLED BARE COPPER BUS BARS, COPPER EQUIPMENT GROUND BUS, AND SUPPORTS INSULATED TO SUIT SYSTEM VOLTAGE.

5.B. PROVIDE AMPERE RATING OF BUS BARS NOT LESS THAN EITHER THE FRAME SIZE OF MAIN CIRCUIT BREAKER IN THE PANELBOARD, OR, IN THE CASE OF MAIN LUG ONLY PANELBOARDS, THE NEC AMPERE RATING OF THE FEEDER CONDUCTORS.

5.C. PROVIDE BUS BARS BRACED TO WITHSTAND THE SAME FAULT CURRENTS AS THE BRANCH CIRCUIT BREAKER SPECIFIED.

5.D. BUSSES SHALL EXTEND ENTIRE PANEL LENGTH.

5.E. PROVIDE FULL CAPACITY NEUTRAL BUS.

5.F. PROVIDE AN ADEQUATE NUMBER OF LUGS TO ACCEPT QUANTITIES OF CABLES INDICATED FOR INCOMING AND OUTGOING CONDUCTORS PLUS SPARE FOR FUTURE CONNECTION.

6. ENCLOSURES:

6.A. PROVIDE BACKBOXES FABRICATED OF CODE GAUGE HOT GALVANIZED STEEL WITH CORNERS LAPPED AND RIVETED OR WELDED, CONFORMING TO UNDERWRITER'S LABORATORIES REQUIREMENTS.

6.B. BACKBOXES SHALL BE OF MANUFACTURER'S STANDARD WIDTH.

6.C. PROVIDE TRIMS OF CODE GAUGE STEEL WITH RUST-INHIBITING PRIMER AND BAKED ENAMEL FINISH.

6.D. PROVIDE ONE-PIECE, DOOR-IN-DOOR TRIM.

6.E. CABINETS SHALL BE AS SHOWN ON THE DRAWINGS. BACK BOX SHALL BE OF SUFFICIENT SIZE TO PROVIDE MINIMUM GUTTER SPACE ON ALL FOUR SIDES, BASED ON THE PANELS MAXIMUM CIRCUIT OVERCURRENT PROTECTIVE DEVICE AND AS REQUIRED BY UL AND NEC.

6.F. KEY ALL PANELBOARDS ALIKE. IN ADDITION TO THE LOCK, EQUIP ALL DOORS OVER 48" IN HEIGHT WITH A NICKEL-PLATED VAULT HANDLE AND 3-POINT CATCH ARRANGED TO FASTEN DOOR AT TOP, BOTTOM, AND CENTER.

7. MOLDED CASE CIRCUIT BREAKERS:

7.A. SHALL BE BOLT-ON

7.B. CURRENT RATINGS SHALL BE PERMANENTLY ENGRAVED ON OPERATING HANDLES.

7.C. SHALL BE FULLY RATED TO MEET AVAILABLE FAULT CURRENTS.

genesis engineering group, llc.
2601 Cattleman Rd, Suite 501
sarasota, fl 34232
project #18-051
coa #29304
genesis
www.geneng.net

FleischmanGarcia
ARCHITECTURE • PLANNING • INTERIOR DESIGN
SAFETY HARBOR OFFICE
195 FOURTH AVENUE NORTH
SAFETY HARBOR, FLORIDA 34695
PHONE (727) 725-8880
FAX (727) 725-3900
TAMPA OFFICE
324 HYDE PARK AVENUE, SUITE 300
TAMPA, FLORIDA 33606
PHONE (813) 251-4400
FAX (813) 251-1994
REGISTRATION NUMBER AA C000123
SARASOTA OFFICE
5967 CATTLEMEN LANE, SUITE 6
SARASOTA, FLORIDA 34232
PHONE (941) 342-9293
FAX (941) 342-9253

NEW TAMPA RECREATION CENTER ADDITION

TAMPA, FL 33647

THIS DESIGN AND DRAWING IS THE SOLE PROPERTY OF FLEISCHMANGARCIA. NO PART OF THIS WORK MAY BE REPRODUCED WITHOUT PRIOR WRITTEN PERMISSION FROM FLEISCHMANGARCIA.

I CERTIFY TO THE BEST OF MY KNOWLEDGE THAT THESE DRAWINGS COMPLY W/ ALL RELEVANT BUILDING CODES

FGA PROJECT NUMBER
18015

ISSUE DATE
11/07/18

SHEET NUMBER
E0.3

ELECTRICAL SPECIFICATIONS (CONTINUED):

7.D. PROVIDE STANDARD FRAME SIZES, TRIP RATINGS, AND NUMBER OF POLES AS INDICATED ON DRAWINGS AND SCHEDULES
7.E. PROVIDE ACCESSORIES (I.E. HANDLE LOCK) AS CALLED FOR ON DRAWINGS.
7.F. THERMAL MAGNETIC: SHALL BE QUICK MAKE/QUICK BREAK TOGGLE ACTION WITH POSITIVE INDICATION OF TRIP AND TRIP-FREE MECHANISM.

8. WHERE NEW CIRCUIT BREAKERS ARE REQUIRED FOR INSTALLATION IN EXISTING PANELBOARDS, CONTRACTOR SHALL PROVIDE CIRCUIT BREAKERS WHICH ARE COMPATIBLE WITH EXISTING PANELBOARD. MATCH EXISTING PANELBOARD CONSTRUCTION, FRAME SIZE, KAIC RATINGS, ETC.
9. EQUIP SECTIONS DESIGNATED AS "SPACE" WITH ALL ACCESSORIES REQUIRED TO ACCEPT A FUTURE CIRCUIT BREAKER.
10. INSTALL PANELBOARDS AND ENCLOSURES AS INDICATED, IN ACCORDANCE WITH MANUFACTURER'S WRITTEN INSTRUCTIONS, APPLICABLE REQUIREMENTS OF NEC AND NECA'S "STANDARD OF INSTALLATION," AND IN COMPLIANCE WITH RECOGNIZED INDUSTRY PRACTICES.
11. PROVIDE ALL PANELBOARDS BY THE SAME MANUFACTURER.
12. TIGHTEN ALL ACCESSIBLE CONNECTIONS TO MANUFACTURER'S TIGHTENING TORQUE SPECIFICATIONS.
13. PRIOR TO ENERGIZATION OF PANELBOARDS, CHECK WITH GROUND RESISTANCE TESTER PHASE-TO-PHASE AND PHASE-TO-GROUND INSULATION RESISTANCE LEVELS TO ENSURE REQUIREMENTS ARE FULFILLED.
14. PRIOR TO ENERGIZATION OF PANELBOARDS, CHECK FOR ELECTRICAL CONTINUITY OF CIRCUITS AND FOR SHORT CIRCUITS.
15. ACCEPTABLE MANUFACTURERS: SQUARE D, CUTLER HAMMER, GENERAL ELECTRIC, APPROVED EQUAL

ENCLOSED SAFETY SWITCHES (DISCONNECT SWITCHES) AND CIRCUIT BREAKERS

1. SAFETY SWITCHES
    - 1.A. UNLESS OTHERWISE NOTED, PROVIDE SAFETY SWITCHES OF TYPES, SIZES, CHARACTERISTICS, AND RATINGS INDICATED WHICH COMPLY WITH MANUFACTURER'S STANDARD DESIGN, MATERIALS, COMPONENTS, AND CONSTRUCTION IN ACCORDANCE WITH PUBLISHED PRODUCT INFORMATION; AND AS REQUIRED FOR A COMPLETE INSTALLATION.
    - 1.B. SWITCHES SHALL BE RATED 240 VOLTS FOR 208 VOLT AND 240 VOLT SYSTEMS, AND 600 VOLTS FOR 480 VOLT SYSTEMS.
    - 1.C. PROVIDE AMPERE RATING AND NUMBER OF POLES AS INDICATED ON THE CONTRACT DRAWINGS, OR IF NOT INDICATED, SAME AS BRANCH CIRCUIT OR FEEDER SERVING THE SWITCH.
    - 1.D. PROVIDE WITH NEUTRAL BUS WHEN NEUTRAL AND/OR GROUNDING CONDUCTOR IS INCLUDED IN THE CIRCUIT.
    - 1.E. PROVIDE FUSED OR UNFUSED AS INDICATED.
    - 1.F. PROVIDE IN AN APPROVED NEMA ENCLOSURE, OR AS INDICATED.
    - 1.G. SWITCHES SHALL BE HORSEPOWER RATED, HEAVY DUTY, QUICK-MAKE, QUICK-BREAK WITH DUAL COVER INTERLOCK.
2. ENCLOSED CIRCUIT BREAKERS
    - 2.A. SHALL MEET ALL REQUIREMENTS OF "MOLDED CASE CIRCUIT BREAKERS" AS SPECIFIED HEREIN.
    - 2.B. PROVIDE IN APPROVED NEMA ENCLOSURE, OR AS INDICATED.
3. INSTALL SAFETY SWITCHES AND ENCLOSED CIRCUIT BREAKERS AS INDICATED, COMPLYING WITH MANUFACTURER'S WRITTEN INSTRUCTIONS, APPLICABLE REQUIREMENTS OF NEC, NEMA, AND NECA'S "STANDARD OF INSTALLATION," AND IN ACCORDANCE WITH RECOGNIZED INDUSTRY PRACTICES.

FUSES

1. UNLESS OTHERWISE NOTED, PROVIDE FUSES OF MANUFACTURER'S STANDARD MATERIALS, AS INDICATED BY PUBLISHED PRODUCT INFORMATION, AND AS DESIGNED AND CONSTRUCTED AS RECOMMENDED BY THE MANUFACTURER AND AS REQUIRED FOR A COMPLETE INSTALLATION.
2. PROVIDE FUSES IN ALL FUSIBLE EQUIPMENT.
3. PROVIDE FUSES FROM ONE MANUFACTURER.
4. FUSES FOR ALL SAFETY SWITCHES AND SERVICE DISCONNECTS THAT ARE RATED 600 VOLTS AND LESS SHALL BE AS FOLLOWS:
    - 4.A. TYPE: CARTRIDGE, TIME DELAY
    - 4.B. INTERRUPTING CAPACITY: 200,000 AMPS
    - 4.C. 0-99 AMPS: BUSSMAN "FUSETRON"
    - 4.D. 100-599 AMPS: BUSSMAN "LOW-PEAK"
    - 4.E. BASIS OF DESIGN: BUSSMAN
    - 4.F. ACCEPTABLE MANUFACTURERS: BUSSMAN, CHASE-SHAWMUT, GENERAL ELECTRIC, APPROVED EQUAL.

WIRING DEVICES

1. PROVIDE WIRING DEVICES IN TYPES, COLORS, AND ELECTRICAL RATINGS FOR THE SERVICE INDICATED AND WHICH COMPLY WITH NEMA STANDARDS. WHERE TYPES AND GRADES ARE NOT INDICATED, PROVIDE PROPER SELECTION AS DETERMINED BY INSTALLER TO FULFILL THE WIRING REQUIREMENTS AND COMPLY WITH NEC AND NEMA STANDARDS FOR WIRING DEVICES.
2. LIGHT SWITCHES
    - 2.A. HEAVY DUTY, TOGGLE, QUITE-TYPE, AND FULLY ENCLOSED IN COMPOSITION CASES
    - 2.B. RATED 20A, 120/277 VOLTS, AC
    - 2.C. STYLE AND FINISH TO BE DETERMINED BY ARCHITECT.
    - 2.D. WHERE MORE THAN ONE SWITCH IS BEING INSTALLED, PROVIDE MULTIPLE GANG SWITCH PLATES FOR NUMBER OF SWITCHES AS REQUIRED.
    - 2.E. SWITCH TYPE AS INDICATED (SINGLE, THREE-WAY, DIMMER, ETC.)
3. DUPLEX AND QUAD RECEPTACLES
    - 3.A. NEMA 5-20R, COMMERCIAL GRADE, FEED-THROUGH TYPE, GROUNDING TYPE
    - 3.B. 20A, 120 VOLT RATED
    - 3.C. STYLE AND FINISH TO BE DETERMINED BY ARCHITECT.
4. GFCI DUPLEX AND QUAD RECEPTACLES
    - 4.A. NEMA 5-20R, COMMERCIAL GRADE, FEED-TROUGH TYPE, GROUNDING TYPE
    - 4.B. 5 MILLI AMP SENSITIVITY
    - 4.C. 20A, 120 VOLT RATED
    - 4.D. STYLE AND FINISH TO BE DETERMINED BY ARCHITECT
5. SURGE SUPPRESSION DUPLEX RECEPTACLES
    - 5.A. NEMA 5-20R, INDUSTRIAL GRADE, FEED-THROUGH SURGE SUPPRESSION TYPE, GROUNDING TYPE
    - 5.B. LED MONITOR, AUDIBLE ALARM, THERMAL PROTECTION
    - 5.C. 20A, 120 VOLT RATED
    - 5.D. PROVIDE BLUE FINISH
6. SPECIAL PURPOSE RECEPTACLES
    - 6.A. PROVIDE TYPE AND CONFIGURATION AS INDICATED.
    - 6.B. PROVIDE WITH AMPERE RATING AND VOLTAGE RATING TO MATCH APPLICATION.
    - 6.C. STYLE AND FINISH TO BE DETERMINED BY ARCHITECT
7. OCCUPANCY SENSORS
    - 7.A. PROVIDE CEILING-MOUNT, WALL-MOUNT, LIGHT SWITCH/SENSOR COMBO AS INDICATED ON DRAWINGS AND SCHEDULES
    - 7.B. PROVIDE NECESSARY POWER PACKS FOR LOW-VOLTAGE SENSORS. VERIFY THE NUMBER OF POWER PACKS NEEDED TO PROVIDE A COMPLETE SYSTEM. TO MAINTAIN DRAWING CLARITY, POWER PACKS HAVE NOT BEEN SHOWN.
    - 7.C. AIM OCCUPANCY SENSORS FOR OPTIMAL COVERAGE OF SPACE. SET EACH SENSOR FOR TIME SETTING AS DIRECTED BY OWNER'S REPRESENTATIVE AND AS REQUIRED BY APPLICABLE CODES.
    - 7.D. ADDITIONAL SENSORS MAY BE REQUIRED TO PROVIDE COMPLETE COVERAGE DEPENDING ON, BUT NOT LIMITED TO, PARTITION HEIGHT/PLACEMENT, FURNITURE PLACEMENT, EQUIPMENT HEIGHT/PLACEMENT, AND SHELVING PLACEMENT. PROVIDE ADDITIONAL SENSORS AS REQUIRED.
    - 7.E. IF REQUIRED, PROVIDE SENSOR MASKING KITS TO LIMIT COVERAGE OF AREAS. VERIFY WITH OWNER'S REPRESENTATIVE.
8. FLOOR BOXES
    - 8.A. PROVIDE SIZE AND QUANTITY OF DEVICES AS INDICATED ON FLOOR PLANS.
    - 8.B. PROVIDE INSTALLATION TYPE AS REQUIRED TO MATCH FLOOR CONSTRUCTION.
    - 8.C. COORDINATE FINAL FINISH AND COVER PLATE WITH ARCHITECT AND FINISHED FLOORING TYPE.
9. WALL PLATES & WALL PLATE SCREWS
    - 9.A. COORDINATE WALL PLATE MATERIAL AND FINISH COLOR WITH ARCHITECT.
    - 9.B. SCREWS SHALL MATCH PLATE COLOR.
10. PROVIDE DEVICE COLORS AS SELECTED BY ARCHITECT.
11. PRIOR TO ENERGIZING CIRCUITRY, TEST WIRING FOR ELECTRICAL CONTINUITY AND FOR SHORT-CIRCUITS. ENSURE PROPER POLARITY OF CONNECTIONS IS MAINTAINED. SUBSEQUENT TO ENERGIZATION, TEST WIRING DEVICES TO DEMONSTRATE COMPLIANCE WITH REQUIREMENTS.

LIGHT FIXTURES

1. FURNISH AND INSTALL LIGHTING FIXTURES COMPLETE AS INDICATED ON THE DRAWINGS AND SCHEDULES.
2. PROVIDE LIGHT FIXTURES COMPLETE WITH, BUT NOT LIMITED TO, HOUSINGS, LAMPS, LAMP HOLDERS, REFLECTORS, TRIM, WIRING, ETC.
3. LAMPS/LIGHT SOURCE:
    - 3.A. 2' T8 FLUORESCENT: TCLP COMPLIANT, ENERGY SAVING TYPE, EXTRA LOW MERCURY, MIN 1500 INITIAL LUMENS, MIN CRI 85, 3500K COLOR TEMP (UNLESS OTHERWISE INDICATED ON SCHEDULES), 30,000 HOURS RATED LIFE.
    - 3.B. 4' T8 FLUORESCENT: TCLP COMPLIANT, ENERGY SAVING TYPE, EXTRA LOW MERCURY, MIN 3100 INITIAL LUMENS, MIN CRI 85, 3500K COLOR TEMP (UNLESS OTHERWISE INDICATED ON SCHEDULES), 30,000 HOURS RATED LIFE.
    - 3.C. LED: PROVIDE LED LIGHT SOURCE INTEGRAL TO LIGHT FIXTURE. LIGHT FIXTURE SHALL BEAR THE UL LABEL AND CONSIST OF UL LABELED COMPONENTS. PROVIDE INTEGRAL OR REMOTE BALLAST AS REQUIRED BY LIGHT FIXTURE MANUFACTURER. MIN CRI 80, 3500 COLOR TEMP (UNLESS OTHERWISE INDICATED ON SCHEDULES), 50,000 HOURS RATED LIFE.
4. FLUORESCENT BALLASTS: ELECTORNIC, UL 935 AND ANSI C82.11 COMPLIANT, CLASS A SOUND RATING. PROVIDE BALLASTS FOR SPECIFIED LAMPS PER LUMINIAIRE SCHEDULE AND LIGHT FIXTURE MANUFACTURER RECOMMENDATIONS.
5. THE INSTALLATION AND PRACTICES SHALL COMPLY WITH NEC, NEMA, ANSI, AND THE UL LISTING REQUIREMENTS FOR THE LIGHT FIXTURES USED.
6. LIGHT FIXTURE PARTS SHALL BE PAINTED AFTER FABRICATION.
7. PROVIDE LIGHT FIXTURES WITH NECESSARY MOUNTING COMPONENTS AS REQUIRED TO INSTALL FIXTURES AT LOCATIONS/ELEVATIONS SHOWN ON DRAWINGS. MOUNTING COMPONENTS INCLUDE, BUT ARE NOT LIMITED TO, INTERMEDIATE STEEL, CHAIR, AIR CRAFT CABLE, BOXES, HANGERS, ETC.
8. PROVIDE LIGHT FIXTURES AND/OR FIXTURE OUTLET BOXES WITH HANGERS TO PROPERLY SUPPORT FIXTURE WEIGHT. SUPPORT FIXTURES INDEPENDENT OF CEILING TO BUILDING STRUCTURE FROM AT LEAST TWO (2) FIXTURE POINTS OF CONNECTION.
9. PROVIDE A COMPLETE DIMMING SYSTEM AS INDICATED ON DRAWINGS, INCLUDING, BUT NOT LIMITED TO, DIMMER CONTROLS, WIRING FROM CONTROLS TO FIXTURES, DIMMABLE BALLASTS/FIXTURE DRIVERS, ETC. PROVIDE ALL WORK AS REQUIRED FOR A COMPLETE AND OPERABLE DIMMING SYSTEM AS INDICATED ON DRAWINGS. WHERE POSSIBLE, PROVIDE LIGHT FIXTURES COMPATIBLE WITH SAME DIMMING PROTOCOLS. WHERE NOT POSSIBLE, PROVIDE QUANTITY OF DIMMING PROTOCOLS (INCLUDING DIMMERS, WIRE, ETC.) AS REQUIRED FOR A COMPLETE DIMMING SYSTEM.
10. REFER TO ARCHITECTURAL REFLECTED CEILING PLANS FOR EXACT PLACEMENT OF ALL LIGHT FIXTURES.
11. LIGHT FIXTURES SHALL BE CLEAN AND LAMPED WITH NEW LAMPS AT THE TIME OF FINAL INSPECTION.
12. UPON COMPLETION OF INSTALLATION OF LIGHT FIXTURES, DEMONSTRATE COMPLIANCE WITH REQUIREMENTS. WHERE POSSIBLE, CORRECT MALFUNCTIONING UNITS AT SITE, THEN RETEST TO DEMONSTRATE COMPLIANCE; OTHERWISE REMOVE AND REPLACE WITH NEW UNITS AND PROCEED WITH RETESTING.

TELEPHONE/DATA SYSTEM

1. PROVIDE A SYSTEM OF EMPTY CONDUITS, PULL WIRE, AND OUTLET BOXES WITH 3/8" DIAMETER BUSHED COVER PLATES AS INDICATED AND/OR REQUIRED. LEAVE SYSTEM READY FOR PULLING WIRES BY THE TELECOMMUNICATIONS CO.
2. IN HUNG CEILING AREAS, PROVIDE A 3/4" EMPTY CONDUIT, UNLESS OTHERWISE NOTED, FROM TELECOM OUTLET BOX TO WITHIN HUNG CEILING AREA TERMINATING WITH AN INSULATED BUSHING THREE INCHES ABOVE BOTTOM OF HUNG CEILING.
3. FURNISH AND INSTALL PULL WIRE IN EMPTY RACEWAYS.
4. COORDINATE ALL WORK WITH THE REQUIREMENTS OF THE TELECOMMUCATIONS CO.

FIRE DETECTION AND ALARM

1. PROVIDE COMPLETE FIRE ALARM SYSTEM AS INDICATED IN DRAWINGS AND IN COMPLIANCE WITH REQUIREMENTS OF NFPA 72, NFPA 101, ALL APPLICABLE STATE AND LOCAL BUILDING CODES AND AUTHORITIES HAVING JURISDICTIONS.
2. PROVIDE FULLY ADDRESSABLE SYSTEM. EACH DEVICE SHALL HAVE AN ASSOCIATED DEVICE ID WITH A DESCRIPTION OF THE DEVICE FOR THE CONTROL PANEL INFORMATION SCREEN.
3. FIRE ALARM SYSTEM SHALL BE PROVIDED WITH BATTERY BACK-UP POWER FOR 60 HOURS OF STANDBY OPERATION PLUS 5 MINUTES OF ALARM OPERATION.
4. ALL DEVICES AND COMPONENTS SHALL BE UL LABELED FOR FIRE SERVICE USE.
5. PROVIDE SURGE DEVICES FOR SIGNAL AND INITIATION CIRCUITS, 120V POWER, AND INCOMING/OUTGOING COMMUNICATIONS LINES PER MANUFACTURER'S RECOMMENDATIONS.
6. PROVIDE GROUNDING OF SYSTEM TO SERVICE ENTRANCE GROUNDING SYSTEM UTILIZING MINIMUM #6 AWG GROUNDING CONDUCTOR.
7. ENTIRE SYSTEM SHALL BE CAPABLE OF 25% FUTURE EXPANSION.
8. ALL SYSTEM COMPONENTS SHALL HAVE RED FINISH AND BE INSTALLED IN ENCLOSURES AND CABINETS PAINTED RED IN COLOR.
9. PROVIDE COMPLETE SYSTEM INFORMATION INCLUDED IN SUBMITTALS FOR APPROVAL, INCLUDING:
    - 9.A. BATTERY CALCULATIONS
    - 9.B. COMPLETE FLOOR PLANS INDICATING EACH DEVICE WITH ITS ASSOCIATED NUMBER/LABEL AND MANUFACTURER'S MODEL NUMBER.
    - 9.C. COMPLETE RISER AND/OR WIRING DIAGRAMS SHOWING ALL TERMINATIONS, DEVICES, CONDUCTOR TYPES AND QUANTITIES, AND DEVICE NUMBERS/LABELS.
    - 9.D. VOLTAGE DROP CALCULATIONS FOR ALL CIRCUITS.
    - 9.E. COMPLETE FLOOR PLANS SHOWING EACH STROBE DEVICE WITH ITS ASSOCIATED CANDELA RATING.
    - 9.F. ALL MANUFACTURE'S LITERATURE SHOWING DEVICE POWER REQUIREMENTS AND THE CLASS/STYLE OF EACH DEVICE.
10. FIRE ALARM CONTROL AND ANNUNCIATOR PANEL
    - 10.A. FIRE ALARM CONTROL/ANNUNCIATOR PANEL IS EXISTING TO REMAIN AND SHALL BE MODIFIED AS REQUIRED. SEE ELECTRICAL PLANS FOR ADDITIONAL INFORMATION.
11. MANUAL PULL STATION
    - 12.A. SINGLE STAGE, LOCKED TEST FEATURE
    - 12.B. FINISH RED WITH SILVER ENGLISH LETTERING
    - 12.C. 4" SQUARE BOX WITH 1 GANG COVER.
    - 12.D. NEW DEVICE SHALL MATCH EXISTING DEVICE, INCLUDING TRANSPARENT/VANDAL RESISTANT COVER (FIELD VERIFY).
13. SMOKE DETECTOR SHALL MATCH EXISTING (FIELD VERIFY)
    - 13.A. PHOTOELECTRIC TYPE
    - 13.B. INTEGRAL MICROPROCESSOR.
14. DUCT SMOKE DETECTOR SHALL MATCH EXISTING (FIELD VERIFY)
    - 14.A. ANALOG PHOTOELECTRIC TYPE
    - 14.B. INTEGRAL MICROPROCESSOR
    - 14.C. FORM C CONTACTS FOR FAN SHUTDOWN
    - 14.D. PROVIDE SAMPLING TUBE FOR DUCT MOUNTING
    - 14.E. PROVIDE REMOTE TEST STATION
15. HEAT DETECTOR SHALL MATCH EXISTING (FIELD VERIFY)
    - 15.A. COMBINATION FIXED TEMPERATURE/RATE OF RISE DETECTOR
    - 15.B. LOW MASS THERISTOR HEAT SENSOR.
    - 15.C. FIXED TEMPERATURE RISE POINT - 135 DEG. F.
    - 15.D. INTEGRAL MICROPROCESSOR.
16. STROBE NOTIFICATION APPLIANCE SHALL MATCH EXISTING (FIELD VERIFY)
    - 16.A. SHALL BE 75 CANDELLA OR 110 CANDELLA PER UL 1971
    - 16.B. LOW PROFILE, WALL MOUNTED
    - 16.C. PROVIDE SYSTEM FLASH SYNCHRONIZATION
17. COMBINATION HORN/STROBE NOTIFICATION APPLIANCE SHALL MATCH EXISTING (FIELD VERIFY)
    - 17.A. SHALL MEET STROBE NOTIFICATION APPLIANCE REQUIREMENTS
    - 17.B. SHALL PROVIDE MINIMUM 84 DECIBELS AT 10 FEET.
18. COMBINATION SPEAKER/STROBE NOTIFICATION APPLIANCE SHALL MATCH EXISTING (FIELD VERIFY)
19. SPRINKLER & FIRE ALARM BELL ARE EXISTING TO REMAIN
20. TROUBLE ALARM BELL IS EXISTING TO REMAIN
21. PROVIDE SPRINKLER SYSTEM SUPERVISORY AND TAMPER SWITCHES AS REQUIRED BY SPRINKLER SYSTEM, NFPA, AND AS INDICATED ON DRAWINGS. NEW DEVICES SHALL MATCH EXISTING (FIELD VERIFY).
22. PROVIDE ALL RELAYS, MONITOR MODULES, CONTROL MODULES, ETC. AS REQUIRED FOR SHUT-DOWNS AND MONITORING OF EQUIPMENT AS INDICATED.
23. ALL CABLING NOT ROUTED WITHIN CONDUIT SHALL BE PLENUM RATED AND RED IN COLOR. INSTALL ALL WIRES, OTHER THAN PLENUM RATED, IN RACEWAY PAINTED RED.
24. CIRCUITING GUIDELINES:
    - 23.A. EACH ADDRESSABLE LOOP SHALL CONTAIN NO MORE THAN 80% DEVICE LOADING.
    - 23.B. LOOP SHALL HAVE CLASS B OPERATION.
25. PLENUM-RATED CABLING:
    - 24.A. PROVIDE MULTI-CONDUCOTR OR PAIRED CABLE, NUMBER OF CONDUCTORS OR PAIRS AS REQUIRED.
    - 24.B. SHIELDED OR UNSHIELDED, WITH OR WITHOUT DRAIN WIRE AS REQUIRED
    - 24.C. TINNED SOLID COPPER CONDUCTORS, MINIMUM SIZE 22 AWG.
    - 24.D. UL LISTED FOR FLAME RESISTANCE AND LOW SMOKE PROPERTIES IN ACCORDANCE WITH NEC ARTICLES 725, 760, AND 800
    - 24.E. APPROVED FOR USE IN AIR PLENUM CEILING WITHOUT CONDUIT.
    - 24.F. PROVIDE CABLE SUPPORTS FOR PLENUM CABLE AS REQUIRED BY NEC.
26. PROVIDE ALL COMPONENTS AND WIRING FOR FIRE ALARM SYSTEM NECESSARY TO PROVIDE A COMPLETE AND PROPERLY FUNCTIONING SYSTEM WHETHER OR NOT LISTED ON DRAWINGS OR IN SPECIFICATIONS
27. EXPANSIONS/MODIFICATIONS TO EXISTING SYSTEMS
    - 27.A. PROVIDE COMPONENTS TO MATCH EXISTING SYSTEM MANUFACTURER AND SYSTEM TYPE.
    - 27.B. PROVIDE ALL EXPANSIONS, MODIFICATIONS, PROGRAMMING, ETC. TO ACCOMMODATE EXPANSIONS/MODIFICATIONS TO EXISTING SYSTEM AS INDICATED ON DRAWINGS.
    - 27.C. COORDINATE ALL WORK WITH EXISTING SYSTEM MANUFACTURER, VENDOR, AND SERVICE COMPANY.

genesis engineering group, llc.
2601 Cattleman Rd, Suite 501
sarasota, fl 34232
project #18-051
coa #29304
www.geneng.net

FleischmanGarcia
ARCHITECTURE • PLANNING • INTERIOR DESIGN
SAFETY HARBOR OFFICE
195 FOURTH AVENUE NORTH
SAFETY HARBOR, FLORIDA 34695
PHONE (727) 725-8880
FAX (727) 725-3900
TAMPA OFFICE
324 HYDE PARK AVENUE, SUITE 300
TAMPA, FLORIDA 33606
PHONE (813) 251-4400
FAX (813) 251-1994
REGISTRATION NUMBER AA C000123
SARASOTA OFFICE
5967 CATTLEMEN LANE, SUITE 6
SARASOTA, FLORIDA 34232
PHONE (941) 342-9293
FAX (941) 342-9253

NEW TAMPA RECREATION CENTER ADDITION
TAMPA, FL 33647

THIS DESIGN AND DRAWING IS THE SOLE PROPERTY OF FLEISCHMANGARCIA. NO PART OF THIS WORK MAY BE REPRODUCED WITHOUT PRIOR WRITTEN PERMISSION FROM FLEISCHMANGARCIA.

I CERTIFY TO THE BEST OF MY KNOWLEDGE THAT THESE DRAWINGS COMPLY W/ ALL RELEVANT BUILDING CODES

FGA PROJECT NUMBER 18015
ISSUE DATE 11/07/18
SHEET NUMBER E0.4

11-12-18 Benito Verzosa I:\2018\18-051-FL New Tampa Rec Center Electrical\CAD\Electrical\18-051-FL New Tampa Rec Center - Electrical.dwg

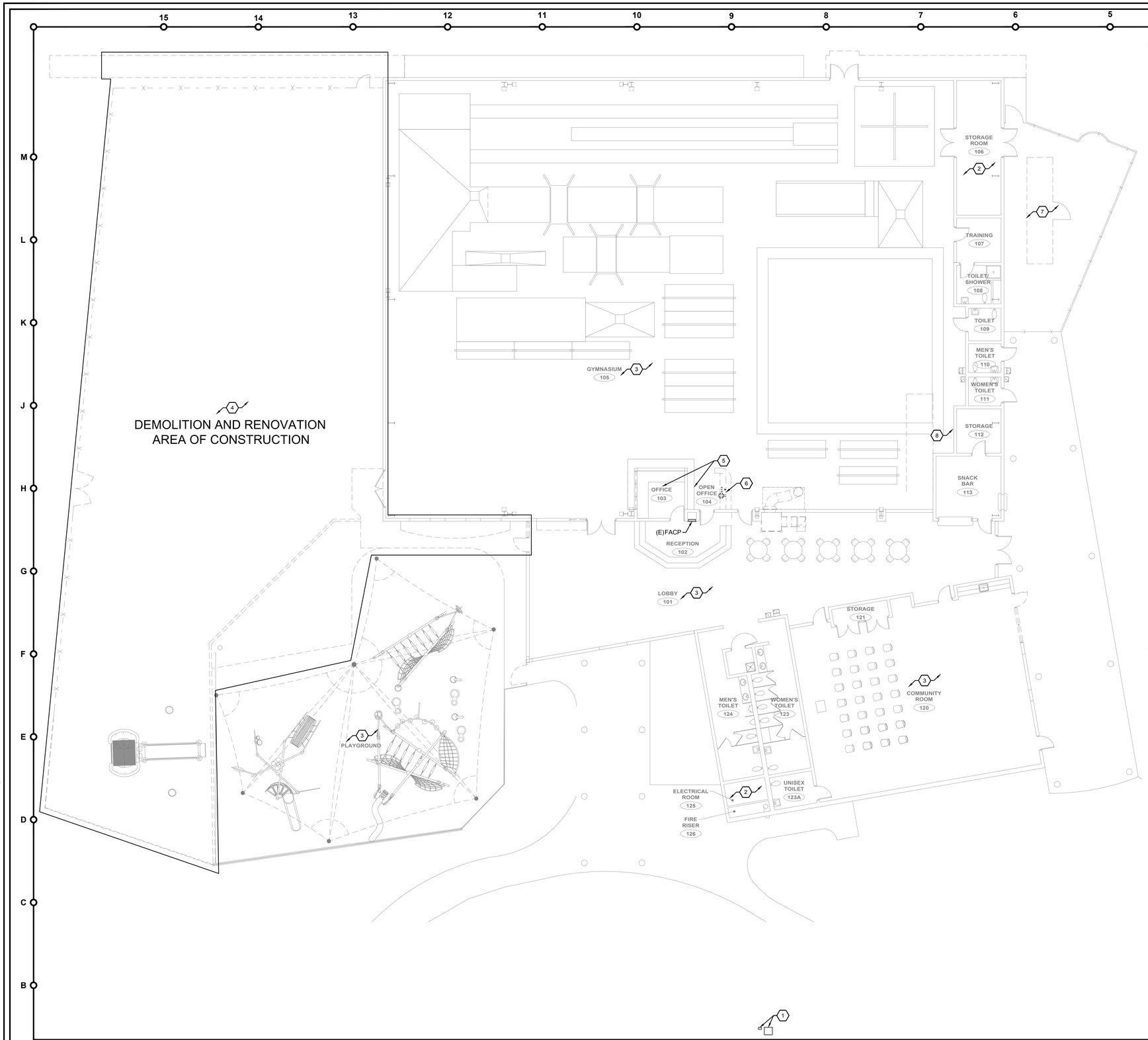

DEMOLITION GENERAL NOTES

A. REFER TO FINAL APPROVED ARCHITECTURAL DEMOLITION AND RENOVATION FLOOR PLANS FOR OTHER ADDITIONAL INFORMATION.

B. CONTRACTORS WILL BE REQUIRED TO ATTEND AN ORIENTATION PROGRAM IDENTIFYING RISKS AND OWNER EXPECTATIONS, REQUIREMENTS AND REGULATIONS.

C. CONTRACTORS SHALL TAKE NECESSARY PRECAUTIONS FOR WORKER PROTECTION DURING THE ENTIRE DURATION OF THIS NEW DEMOLITION AND RENOVATION WORK.

D. ELECTRICAL CONTRACTOR (EC) SHALL OBTAIN ALL EXISTING ELECTRICAL AS-BUILT DRAWINGS OF THE AREAS FROM THE OWNER REPRESENTATIVE BEFORE STARTING THIS NEW DEMOLITION AND RENOVATION WORK. ALL EXISTING POWER, CONTROL, LOW VOLTAGE SYSTEMS AND SPECIAL SYSTEMS CIRCUITS FOR ALL EXISTING EQUIPMENT, DEVICES, ETC. WHICH ARE AFFECTED BY THIS NEW DEMOLITION AND RENOVATION WORK SHALL BE TRACED BACK TO THEIR SOURCE AND SHALL BE MARKED PROPERLY PRIOR TO COMMENCING ANY WORK IN THIS SITE.

E. DURING DEMOLITION PHASE LOCK-OUT, TAG-OUT PROCEDURES SHALL BE FOLLOWED PER GENERAL CONTRACTOR (GC) REQUIREMENTS AND SPECIFICATIONS. ELECTRICAL CONTRACTOR (EC) SHALL COORDINATE WITH GC FOR THE EXACT SPECIFIC WORK REQUIREMENTS AND ADDITIONAL INFORMATION PRIOR TO COMMENCING ANY WORK IN THIS SITE.

F. ELECTRICAL CONTRACTOR (EC) SHALL COORDINATE WITH GC FOR THE EXACT SCHEDULED PHASING WORK REQUIREMENTS AND ADDITIONAL INFORMATION PRIOR TO START OF NEW CONSTRUCTION.

G. ALL EXISTING LIFE SAFETY LIGHT FIXTURES AND FIRE ALARM SYSTEM EQUIPMENT, DEVICES, ETC., INCLUDING ALL ASSOCIATED ITEMS SHALL REMAIN OPERATIONAL FOR THE ENTIRE DURATION OF THIS NEW DEMOLITION AND RENOVATION WORK.

H. EC SHALL PERFORM FUNCTIONAL TEST OF ALL EXISTING CIRCUITS AND COMPONENTS AFFECTED BY THIS NEW DEMOLITION AND RENOVATION WORK PRIOR TO START OF NEW CONSTRUCTION. NOTIFY GC IMMEDIATELY OF ANY DISCREPANCIES FOUND.

I. IT IS THE RESPONSIBILITY OF THE EC TO FIELD VERIFY THE CURRENT EXISTING CONDITIONS AND LAYOUTS. EC SHALL CONTACT GC IMMEDIATELY FOR ANY DISCREPANCIES.

J. ALL EXISTING ELECTRICAL PANELBOARDS, EQUIPMENT, DEVICES, LOW VOLTAGE SYSTEMS, ETC., INCLUDING ALL ASSOCIATED ITEMS SHALL REMAIN OPERATIONAL DURING THE ENTIRE DURATION OF THIS NEW DEMOLITION AND RENOVATION WORK. PROVIDE APPROVED PHYSICAL PROTECTION FOR ALL ITEMS AT ALL TIMES FROM DEBRIS, AND/OR WHEN EXPOSED TO OUTSIDE WEATHER CONDITION DURING THE DEMOLITION AND RENOVATION WORK.

K. REMOVE ANY OTHER ELECTRICAL ITEMS THAT MAY INTERFERE WITH THE WORK AND REINSTALL THEM AFTER WORK IS COMPLETED. FIELD VERIFY WITH GC OF WHICH EXACT ITEMS TO BE REMOVED PRIOR TO REMOVAL.

L. ALL COMPONENTS, ETC. WHICH HAVE BEEN DAMAGED DURING THE DEMOLITION WORK SHALL BE REPLACED AT NO ADDITIONAL COST TO THE OWNER.

M. ALL EXISTING BRANCH CIRCUITS TO REMAIN SHALL BE RECONNECTED WHETHER INDICATED OR NOT ON PROJECT DOCUMENTS.

N. CONTRACTOR SHALL RETAIN BREAKERS MADE SPARE BY DEMOLITION WORK FOR CONNECTION OF NEW WORK, UNLESS OTHERWISE NOTED.

O. REMOVE ALL CONDUIT LEFT EXPOSED BY REMOVAL OF WALLS AND CEILINGS IN REMODELED AREAS. PLUG BOTH ENDS OF REMAINING CONDUIT IN WALL OR FLOOR WHERE CUT.

P. ALL ABANDONED WIRING OF ALL TYPES SHALL BE REMOVED COMPLETELY FROM THE SOURCE AND DISCARD PROPERLY PER OWNER REPRESENTATIVE DIRECTION.

Q. ELECTRICAL DEVICES CONCEALED BY STORAGE SHELVING, CASEWORK, FURNITURE , ETC. ARE TO BE REMOVED AS REQUIRED BY DEMOLITION PLANS.

R. CONTRACTOR SHALL BE RESPONSIBLE FOR PATCHING ALL OPENINGS IN EXISTING CONSTRUCTION AFTER REMOVAL OF EQUIPMENT, DEVICES, ETC. REFER TO ARCHITECTURAL PLANS FOR PATCHING/DRYWALL REPLACEMENT INSTRUCTIONS.

S. PROVIDE NEW BLANK COVER PLATES ON EXISTING TO REMAIN OUTLET BOXES WHERE EXISTING WIRING DEVICES ARE BEING REMOVED FROM EXISTING WALLS TO REMAIN. MATCH COLOR AND MATERIAL PER BUILDING FACILITY STANDARD.

T. FIELD VERIFY ALL EXISTING CONDITIONS AND DIMENSIONS PRIOR TO COMMENCEMENT OF ANY WORK.

DEMOLITION KEYNOTES

1. EXISTING TAMPA ELECTRIC COMPANY PAD MOUNTED TRANSFORMER AND METER. SEE PARTIAL POWER RISER DIAGRAM ON SHEET E6.1 FOR ADDITIONAL INFORMATION.
2. ALL EXISTING ELECTRICAL EQUIPMENT, DEVICES, ETC. IN THIS ROOM TO REMAIN. SEE RENOVATION FLOOR PLAN ON SHEET E2.0 FOR ADDITIONAL INFORMATION.
3. ALL EXISTING ITEMS IN THIS AREA AND ADJACENT AREAS TO REMAIN, UNLESS OTHERWISE NOTED.
4. NEW DEMOLITION AND RENOVATION AREA OF WORK. SEE RENOVATION FLOOR PLANS ON SHEETS E2.0, E2.1, E3.1 AND E4.1 FOR NEW WORK REQUIREMENTS.
5. ALL EXISTING EQUIPMENT, DEVICES, ETC. IN THESE ROOMS TO REMAIN, UNLESS OTHERWISE NOTED. SEE RENOVATION FLOOR PLANS ON SHEETS E2.0, E2.1 AND E3.1 FOR NEW WORK MODIFICATIONS IN THESE AREAS.
6. EXISTING MILLWORK TO BE REMOVED. REMOVE ALL EXISTING POWER AND LOW VOLTAGE SYSTEMS WIRING DEVICES LOCATED BELOW COUNTERTOP, INCLUDING ASSOCIATED WIRING AND CABLING FROM THE SOURCE.
7. EXISTING CONDENSING UNITS (CU-1 AND CU-2) SHALL BE REMOVED AT A LATER DATE, INCLUDING ALL ASSOCIATED ITEMS. EC SHALL FIELD VERIFY AND COORDINATE WITH GC FOR THE EXACT DATE OF DEMOLITION WORK FOR THESE UNITS.
8. EXISTING AIR HANDLING UNITS AHU-1 AND AHU-2 LOCATED AT EXISTING MECHANICAL PLATFORM SHALL BE REMOVED AT A LATER DATE, INCLUDING ALL ASSOCIATED ITEMS. EC SHALL FIELD VERIFY AND COORDINATE WITH GC FOR THE EXACT DATE OF DEMOLITION WORK FOR THESE UNITS. SEE SHEET E4.1 FOR NEW WORK REQUIREMENTS AND ADDITIONAL INFORMATION.

DEMOLITION FLOOR PLAN - ELECTRICAL A1 3/32"=1'

genesis engineering group, llc.
2801 Cattleman Rd., Suite 501
sarasota, fl 34232
project #19-651
genesis
www.genengi.net
cos #23034

FleischmanGarcia
ARCHITECTURE • PLANNING • INTERIOR DESIGN
SAFETY HARBOR OFFICE
195 FOURTH AVENUE NORTH
SAFETY HARBOR, FLORIDA 34695
PHONE (727) 724-8880
FAX (727) 725-9066
TAMPA OFFICE
3214 HYDE PARK AVENUE, SUITE 300
TAMPA, FLORIDA 33603
PHONE (813) 251-4400
FAX (813) 251-4401
ALAMO OFFICE
5967 CATTLEMEN LANE, SUITE 6
ALAMO, FLORIDA 32501
PHONE (941) 342-9292
FAX (941) 342-9253
REGISTRATION NUMBER AA C000123

NEW TAMPA RECREATION CENTER ADDITION

TAMPA, FL 33647

THIS DESIGN AND DRAWING IS THE SOLE PROPERTY OF FLEISCHMAN-GARCIA, INC. AND MAY NOT BE REPRODUCED WITHOUT PRIOR WRITTEN PERMISSION FROM FLEISCHMAN-GARCIA

I CERTIFY TO THE BEST OF MY KNOWLEDGE THAT THESE DRAWINGS COMPLY W/ ALL RELEVANT BUILDING CODES

FGA PROJECT NUMBER
18015

ISSUE DATE
11/07/18

SHEET NUMBER
E1.1

11-12-18 Bento Verzola\K:\2018\18-051-FL New Tampa Rec Center Electrical\CAD\Electrical\18-051-FL New Tampa Rec Center - Electrical.dwg

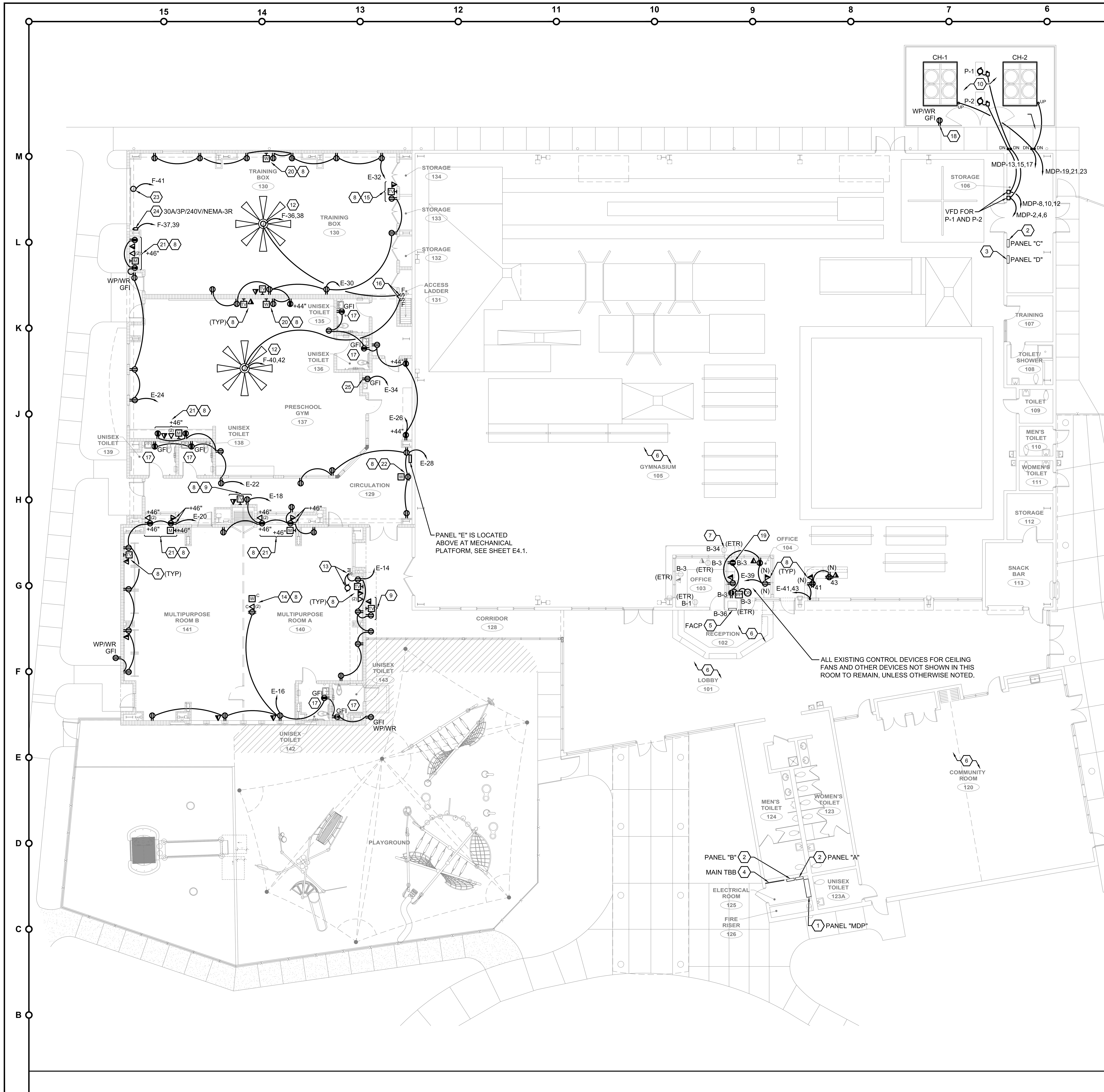

RENOVATION GENERAL NOTES

A. SEE RENOVATION GENERAL NOTES ON SHEET E2.1 FOR ADDITIONAL INFORMATION..

B. ELECTRICAL CONTRACTOR (EC) SHALL COORDINATE WITH THE GENERAL CONTRACTOR (GC) AND COMPLETE A DIGGING PERMIT FORM (IF APPLICABLE) PER OWNER SITE REQUIREMENTS AND SPECIFICATIONS. EC SHALL CONTACT LOCAL UTILITY UNDERGROUND LOCATING SERVICE COMPANY PRIOR TO START DIGGING OR COMMENCING ANY WORK IN THIS SITE.

C. THE EXACT LOCATIONS OF ALL EQUIPMENT AND DEVICES ARE CRITICAL. ELECTRICAL CONTRACTOR MUST REFER TO ARCHITECTURAL ELEVATION AND INTERIOR DIMENSIONED DRAWINGS INCLUDING FINAL APPROVED MECHANICAL, PLUMBING AND FIRE PROTECTION SYSTEM (MPFP) DRAWINGS FOR THE EXACT LOCATION AND MOUNTING HEIGHT OF ALL EQUIPMENT, DEVICES, ETC. PRIOR TO ROUGH-IN. IF THERE ARE CONFLICTS BETWEEN THIS SET OF DRAWINGS AND ARCHITECTURAL / MPFP DRAWINGS REGARDING LOCATIONS OF ALL ELECTRICAL EQUIPMENT AND DEVICES, ELECTRICAL CONTRACTOR MUST NOTIFY THE GC IMMEDIATELY FOR RESOLUTION.

D. ELECTRICAL CONTRACTOR (EC) SHALL OBTAIN ALL EXISTING ELECTRICAL AS-BUILT DRAWINGS OF THE AREAS FROM THE OWNER REPRESENTATIVE BEFORE STARTING THIS NEW DEMOLITION AND RENOVATION WORK. ALL EXISTING POWER, CONTROL, LOW VOLTAGE SYSTEMS AND SPECIAL SYSTEMS CIRCUITS FOR ALL EXISTING EQUIPMENT, DEVICES, ETC. WHICH ARE AFFECTED BY THIS NEW DEMOLITION AND RENOVATION WORK SHALL BE TRACED BACK TO THEIR SOURCE AND SHALL BE MARKED PRIOR TO COMMENCING ANY WORK IN THIS SITE.

E. DO NOT CONNECT GENERAL PURPOSE RECEPTACLE(S) AND CONDENSATE PUMP VIA SWITCH TO THE LOAD SIDE OF GROUND FAULT CIRCUIT INTERRUPTER DEVICE.

F. EXISTING EQUIPMENT AND DEVICES LOCATION INCLUDING BRANCH CIRCUITS MAY NOT REPRESENT ACTUAL FIELD CONDITIONS, THEY ARE INTENDED FOR REFERENCE ONLY.

G. ALL SERIVICE INTERRUPTIONS TO THIS EXISTING FACILITY MUST BE SCHEDULED AT LEAST 3 WEEKS IN ADVANCE AND BE KEPT TO A MINIMUM. COORDINATE ALL DISRUPTIVE WORK AND OUTAGE REQUIREMENTS WITH THE OWNER REPRESENTATIVE.

H. ALL ABANDONED WIRING OF ALL TYPES SHALL BE REMOVED COMPLETELY FROM THE SOURCE AND DISCARD PROPERLY PER OWNER REPRESENTATIVE DIRECTION.

I. MAINTAIN AND RESTORE, IF INTERRUPTED ALL EXISTING CONDUITS AND CONDUCTORS PASSING THROUGH RENOVATED AREAS AND SERVICING UNDISTURBED AREAS.

J. CONTRACTORS SHALL COORDINATE ALL REQUIRED EQUIPMENT SHUTDOWNS WITH THE OWNER REPRESENTATIVE PRIOR TO PROCEEDING TO DISCONNECT EQUIPMENT.

K. CIRCUIT CONTINUITY SHALL BE MAINTAINED TO ALL AREAS NOT PART OF THIS NEW RENOVATION PROJECT DURING AND AFTER CONSTRUCTION. PROVIDE TEMPORARY POWER, LIGHTING AND SPECIAL SYSTEMS (IF NEEDED) DURING CONSTRUCTION.

L. IT IS NOT THE INTENT OF THIS PLAN TO SHOW EVERY MINOR DETAIL OF THE CONSTRUCTION. THE CONTRACTOR IS EXPECTED TO FURNISH AND INSTALL ALL ITEMS FOR A COMPLETE ELECTRICAL SYSTEM, AND PROVIDE ALL NECESSARY DEVICES, COMPONENTS, ETC. FOR EQUIPMENT BE PLACED IN PROPER WORKING ORDER.

M. SEE SPECIFICATIONS AND GENERAL NOTES ON SHEET E0.2 FOR ADDITIONAL INFORMATION.

N. EC SHALL FIELD VERIFY AND COORDINATE WITH GC FOR THE EXACT QUANTITY, LOCATION AND MOUNTING HEIGHT OF ALL WIRING DEVICES PRIOR TO ROUGH-IN.

⟨X⟩ RENOVATION KEYNOTES

1. EXISTING MAIN DISTRIBUTION PANELBOARD TO REMAIN. SEE PANEL SCHEDULE "MDP" AND PARTIAL POWER RISER DIAGRAM ON SHEETS E5.1 AND E6.1 RESPECTIVELY FOR ADDITIONAL INFORMATION.
2. EXISTING PANELBOARD AS INDICATED TO REMAIN.
3. EXISTING PANEL "D" TO REMAIN. SEE SEE PANEL SCHEDULE "D" AND PARTIAL POWER RISER DIAGRAM ON SHEETS E5.1 AND E6.1 RESPECTIVELY FOR ADDITIONAL INFORMATION.
4. EXISTING MAIN TELECOM BACKBOARD. SEE KEYNOTE #1 ON SHEET E2.1 FOR ADDITIONAL INFORMATION.
5. EXISTING FIRE ALARM CONTROL PANEL (FACP). SEE KEYNOTE #2 ON SHEET E2.1 FOR ADDITIONAL INFORMATION.
6. ALL EXISTING EQUIPMENT, DEVICES, ETC. IN THIS AREA AND ADJACENT AREAS TO REMAIN, UNLESS OTHERWISE NOTED.
7. EXISTING SOUND SYSTEM EQUIPMENT, DEVICES, ETC. TO REMAIN, INCLUDING ALL ASSOCIATED ITEMS. SEE SYSTEMS FLOOR PLAN KEYNOTE #4 ON SHEET E2.1 FOR ADDITIONAL INFORMATION.
8. NEW LV SYSTEMS DEVICE(S) AS SHOWN FOR LOCATION COORDINATION PURPOSES ONLY. SEE SYSTEMS FLOOR PLAN ON SHEET E2.1 FOR LV SYSTEMS ELECTRICAL REQUIREMENTS AND ADDITIONAL INFORMATION.
9. FLUSH MOUNT DEVICES IN WALL AT ACCESSIBLE LOCATION BEHIND FUTURE DISPLAY SCREEN. EC SHALL COORDINATE WITH GC FOR THE EXACT LOCATION AND MOUNTING HEIGHT PRIOR TO ROUGH-IN.
10. NEW PACKAGED CHILLER WITH CHILLED WATER PUMP. REFER TO FINAL APPROVED MECHANICAL PLANS FOR ADDITIONAL INFORMATION. SEE EQUIPMENT CONNECTION SCHEDULE ON SHEET E5.2 FOR ELECTRICAL REQUIREMENTS.
11. CUT EXISTING CONCRETE SIDEWALK AS NEEDED FOR NEW UNDERGROUND FEEDERS AND BRANCH CIRCUITS FOR NEW CHILLERS AND PUMPS RESPECTIVELY AS SHOWN. FIELD VERIFY EXACT LOCATION AND COORDINATE WITH OTHER TRADES PRIOR TO COMMENCING ANY WORK.
12. CEILING FAN (FURNISHED BY OTHERS AND INSTALLED BY EC). PROVIDE APPROVED PENDANT MOUNTING SUPPORTS FROM STRUCTURE ABOVE. PROVIDE CONTROL WIRING CONNECTION TO FAN SWITCH AS SHOWN PER KEYNOTE #14. FIELD VERIFY EXACT LOCATION.
13. PACKAGED MOTORIZED PROJECTOR SCREEN. SUBMIT COMPLETE SHOP DRAWINGS SUBMITTALS, INCLUDING INSTALLATION WIRING DIAGRAMS.
14. FLUSH MOUNT DEVICES IN ACT CEILING ADJACENT TO CEILING MOUNTED PROJECTOR EQUIPMENT. COORDINATE EXACT LOCATION PRIOR TO ROUGH-IN.
15. FLUSH MOUNT DEVICES IN WALL ABOVE TOP OF DOOR FRAME AT ACCESSIBLE LOCATION BEHIND TV MONITOR. EXACT LOCATION AND MOUNTING HEIGHT TO BE DETERMINED IN THE FIELD.
16. SWITCH FOR CEILING FAN (FURNISHED WITH CEILING FAN AND INSTALLED BY EC). PROVIDE APPROVED CONTROL WIRING CONNECTION TO CEILING FAN PER FINAL APPROVED SHOP DRAWINGS SUBMITTALS. SUBMIT COMPLETE SHOP DRAWINGS SUBMITTALS INCLUDING COMPLETE INSTALLATION WIRING DIAGRAMS. FIELD VERIFY FOR THE EXACT LOCATIONS OF CEILING FAN AND FAN SWITCH WITH OWNER REPRESENTATIVE PRIOR TO COMMENCING ANY WORK.
17. PROVIDE WP J.BOX, FLUSH MOUNTED IN WALL ADJACENT TO VALVE'S ELECTRONIC SENSOR FOR EACH LOCATION IN THIS ROOM. PROVIDE 120V HARDWIRED BRANCH CIRCUIT CONNECTION FROM DUPLEX RECEPTACLE AHEAD OF GFI DEVICE TO FURNISHED SENSOR'S STEP-DOWN TRANSFORMER. REFER TO FINAL APPROVED VALVE ELECTRONIC SENSOR SHOP DRAWINGS SUBMITTALS FOR THE EXACT ELECTRICAL REQUIREMENTS AND INSTALLATION (TYPICAL FOR 2).
18. PROVIDE NEW DUPLEX RECEPTACLE ON 3/4" RGS STUBBED-UP CONDUIT, CL AT 24" AFG. PROVIDE APPROVED MOUNTING SUPPORTS ON FENCE. PROVIDE WP POWER BRANCH CIRCUIT WIRING CONNECTION TO THE NEAREST AVAILABLE GENERAL PURPOSE DUPLEX RECEPTACLE WITH 2 #10 THWN/THHN CU, 1 #10 EGC IN 3/4" C.
19. REMOVE EXISTING DUPLEX RECEPTACLE, TYPICAL FOR 2 IN THIS NEW OFFICE, AND REPLACE WITH NEW CONTROLLED TYPE DUPLEX RECEPTACLES AS SHOWN. ALSO, PROVIDE NEW POWER PACK ON STRUCTURE ABOVE NEW ACCESSIBLE CEILING AND PROVIDE LOW VOLTAGE (LV) OCCUPANCY SENSOR, SURFACE MOUNTED ON FLUSH MOUNTED OUTLET BOX IN NEW CEILING. PROVIDE CONCEALED POWER WIRING AND LV CABLING CONNECTIONS AS REQUIRED.
20. FLUSH MOUNT DEVICES IN WALL AT ACCESSIBLE LOCATION. COORDINATE EXACT LOCATION AND MOUNTING HEIGHT PRIOR TO ROUGH-IN.
21. FLUSH MOUNT DEVICES IN WALL ABOVE COUNTERTOP. COORDINATE EXACT LOCATION AND MOUNTING HEIGHT PRIOR TO ROUGH-IN.
22. FLUSH MOUNT DEVICES IN ACT CEILING. COORDINATE EXACT LOCATION PRIOR TO ROUGH-IN.
23. ELECTRIC WINCH WITH CONTROL DEVICE BELOW FOR RETRACTABLE BATTING CAGE (FURNISHED BY OTHERS AND INSTALLED BY EC). PROVIDE FLEXIBLE WIRING CONNECTION TO ELECTRIC WINCH AND CONCEALED WIRING CONNECTION TO CONTROL DEVICE. SUBMIT COMPLETE SHOP DRAWINGS SUBMITTALS, INCLUDING INSTALLATION POWER AND CONTROL WIRING DIAGRAMS. EXACT LOCATION TO BE DETERMINED IN THE FIELD.
24. 2 HP, 208/1/60 PACKAGED MOTORIZED OVERHEAD DOOR (FURNISHED WITH MOTOR STARTER, DISCONNECT SWITCH, CONTROL DEVICES, ETC.). PROVIDE LIQUIDTIGHT (SEALTIGHT) FLEXIBLE WIRING CONNECTION TO THE EQUIPMENT. REFER TO FINAL APPROVED SHOP DRAWINGS SUBMITTALS FOR EXACT ELECTRICAL REQUIREMENTS. SEE EQUIPMENT NAMEPLATE RATING, ADJUST CIRCUIT BREAKER SIZE AND HOMERUN BRANCH CIRCUIT WIRING SIZE AS REQUIRED.
25. EWC. 120/1/60 FLUSH MOUNT GFI DUPLEX RECEPTACLE IN WALL JUST BELOW THE EQUIPMENT AT ACCESSIBLE LOCATION.

RENOVATION FLOOR PLAN - POWER A1 3/32"=1'

genesis engineering group, llc.
2601 Cattleman Rd, Suite 501
sarasota, fl 34232
project #18-051
coa #29304
www.geneng.net

FleischmanGarcia
ARCHITECTURE • PLANNING • INTERIOR DESIGN
SAFETY HARBOR OFFICE, 195 FOURTH AVENUE NORTH, SAFETY HARBOR, FLORIDA 34695, PHONE (727) 725-8880, FAX (727) 725-3900
TAMPA OFFICE, 324 HYDE PARK AVENUE, SUITE 300, TAMPA, FLORIDA 33606, PHONE (813) 251-4400, FAX (813) 251-1994
SARASOTA OFFICE, 5967 CATTLEMEN LANE, SUITE 6, SARASOTA, FLORIDA 34232, PHONE (941) 342-9293, FAX (941) 342-9253
REGISTRATION NUMBER AA C000123

NEW TAMPA RECREATION CENTER ADDITION

TAMPA, FL 33647

THIS DESIGN AND DRAWING IS THE SOLE PROPERTY OF FLEISCHMANGARCIA. NO PART OF THIS WORK MAY BE REPRODUCED WITHOUT PRIOR WRITTEN PERMISSION FROM FLEISCHMANGARCIA.

I CERTIFY TO THE BEST OF MY KNOWLEDGE THAT THESE DRAWINGS COMPLY W/ ALL RELEVANT BUILDING CODES

FGA PROJECT NUMBER 18015

ISSUE DATE 11/07/18

SHEET NUMBER **E2.0**

11-12-18 Benito Verzosa J:\2018\18-051-FL New Tampa Rec Center Electrical\CAD\Electrical\18-051-FL New Tampa Rec Center - Electrical.dwg

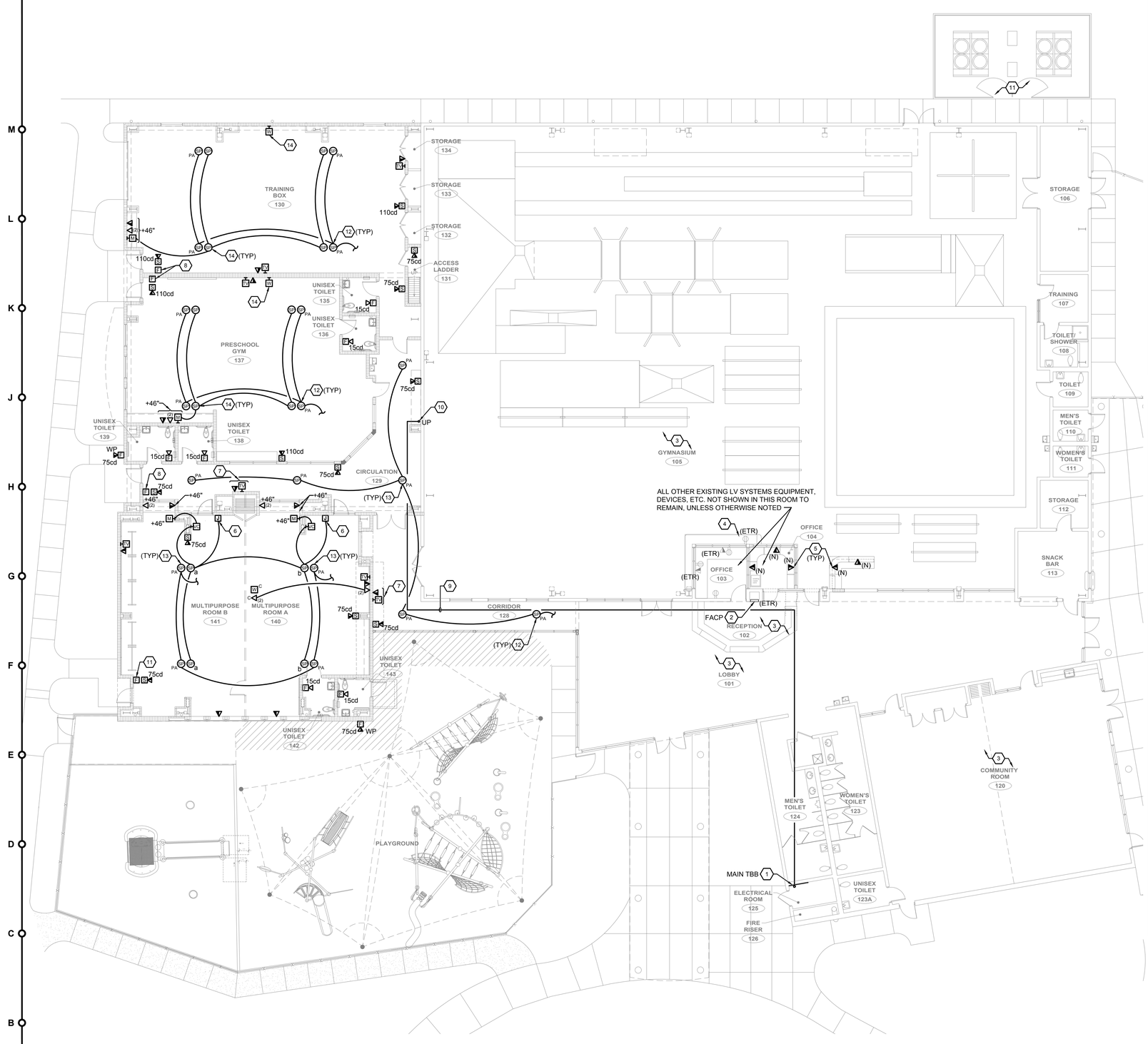

RENOVATION GENERAL NOTES

A. SEE RENOVATION GENERAL NOTES ON SHEET E2.0 FOR ADDITIONAL INFORMATION.

B. REFER TO FINAL APPROVED ARCHITECTURAL DEMOLITION AND RENOVATION FLOOR PLANS FOR OTHER ELECTRICAL ADDITIONAL INFORMATION, INCLUDING THE SCHEDULED PHASING WORK REQUIREMENTS AND OTHER SPECIFIC RELATED INFORMATION.

C. THE EXACT LOCATIONS OF ALL EQUIPMENT AND DEVICES ARE CRITICAL. ELECTRICAL CONTRACTOR MUST REFER TO ARCHITECTURAL ELEVATION AND INTERIOR DIMENSIONED DRAWINGS INCLUDING FINAL APPROVED MECHANICAL, PLUMBING AND FIRE PROTECTION SYSTEM (MPFP) DRAWINGS FOR THE EXACT LOCATION AND MOUNTING HEIGHT OF ALL EQUIPMENT, DEVICES, ETC. PRIOR TO ROUGH-IN. IF THERE ARE CONFLICTS BETWEEN THIS SET OF DRAWINGS AND ARCHITECTURAL / MPFP DRAWINGS REGARDING LOCATIONS OF ALL ELECTRICAL EQUIPMENT AND DEVICES, ELECTRICAL CONTRACTOR MUST NOTIFY THE GC IMMEDIATELY FOR RESOLUTION.

D. SEE FINAL APPROVED MECHANICAL, PLUMBING AND FIRE PROTECTION PLANS FOR EXACT LOCATION OF ALL EQUIPMENT, DEVICES, CONTROL PANEL, ETC. AND OTHER ASSOCIATED ITEMS.

E. EC SHALL COORDINATE WITH OTHER TRADES FOR ITEMS IN THEIR SCOPE OF WORK WHICH WOULD REQUIRE ELECTRICAL WORK (DISCONNECTION, RECONNECTION, ETC.) AND ARE NOT INDICATED IN THE ELECTRICAL PLANS.

F. ALL EXISTING LOW VOLTAGE SYSTEMS TELECOMMUNICATION BACKBOARD WITH EQUIPMENT, DEVICES, ETC. TO REMAIN AND SHALL REMAIN OPERATIONAL DURING THE ENTIRE DURATION OF THIS NEW DEMOLITION AND RENOVATION WORK.

G. SEE ELECTRICAL SPECIFICATIONS AND GENERAL NOTES ON SHEETS E0.2, E0.3 AND E0.4 FOR ADDITIONAL INFORMATION.

H. SEE PARTIAL FIRE ALARM SYSTEM RISER DIAGRAM AND GENERAL NOTES ON SHEET E6.2 FOR ADDITIONAL INFORMATION.

I. SEE LOW VOLTAGE SYSTEMS GENERAL NOTES ON SHEET E0.2 FOR ALL LOW VOLTAGE SYSTEMS PROVISIONS, WORK REQUIREMENTS AND ADDITIONAL INFORMATION.

J. EC SHALL FIELD VERIFY AND COORDINATE WITH GC FOR THE EXACT QUANTITY, LOCATION AND MOUNTING HEIGHT OF ALL WIRING DEVICES PRIOR TO ROUGH-IN.

K. EC SHALL FIELD VERIFY AND COORDINATE WITH GC FOR THE EXACT ELECTRICAL REQUIREMENTS FOR ALL PANIC DOORS.

L. EC SHALL COORDINATE WITH OWNER REPRESENTATIVE FOR ALL OTHER EXISTING EQUIPMENT, DEVICES, ETC. INCLUDING EXISTING LOW VOLTAGE SYSTEMS EQUIPMENT, DEVICES, ETC. NOT SHOWN IN THE ELECTRICAL PLANS WHICH MIGHT NEED EXPANSION, MODIFICATION AND/OR RELOCATION. EC SHALL PROVIDE NEW OUTLET BOXES, PULLBOXES, EMPTY CONDUITS, ETC., INCLUDING ALL REQUIRED POWER AND LOW VOLTAGE SYSTEM WIRING AND CABLING CONNECTION AS NEEDED FOR COMPLETE INSTALLATION AND SATISFACTORY OPERATION OF THESE EXISTING ITEMS. EC SHALL FIELD VERIFY WITH OWNER REPRESENTATIVE FOR ALL THE EXACT ITEMS TO BE REMOVED AND RELOCATED PRIOR TO REMOVAL.

RENOVATION KEYNOTES

1. EXISTING MAIN TELECOM BACKBOARD, EQUIPMENT, DEVICES, ETC. TO REMAIN, INCLUDING ALL ASSOCIATED ITEMS. PROVIDE NEW LOW VOLTAGE SYSTEMS CABLES TO MATCH EXISTING CABLES IN REQUIRED CONDUITS FOR ALL NEW LOW VOLTAGE SYSTEMS EQUIPMENT AND DEVICES LOCATED IN NEW BUILDING ADDITION AREAS, OFFICE 104 AND ADJACENT WORK STATION. SEE LOW VOLTAGE SYSTEMS GENERAL NOTES ON SHEET E0.2 FOR NEW WORK REQUIREMENTS AND ADDITIONAL INFORMATION.

2. EXISTING FIRE ALARM CONTROL PANEL (FACP), SMOKE DETECTOR, ETC. TO REMAIN, INCLUDING ALL ASSOCIATED POWER AND LOW VOLTAGE SYSTEMS WIRING AND CABLING. SEE PARTIAL FIRE ALARM SYSTEM RISER DIAGRAM AND GENERAL NOTES ON SHEET E6.2 FOR ADDITIONAL INFORMATION.

3. ALL EXISTING LV SYSTEMS EQUIPMENT, DEVICES, ETC. IN THIS AREA AND ADJACENT AREAS TO REMAIN, UNLESS OTHERWISE NOTED.

4. EXISTING SOUND SYSTEM EQUIPMENT, DEVICES, ETC. TO REMAIN, INCLUDING ALL ASSOCIATED ITEMS. SEE LV SYSTEMS GENERAL NOTES ON SHEET E0.2 FOR NEW WORK, EXPANSIONS/MODIFICATIONS AND ADDITIONAL INFORMATION.

5. PROVIDE NEW DEVICE TO MATCH EXISTING TELE/DATA DEVICE WITH NEW LOW VOLTAGE SYSTEM CABLING IN 3/4" C. PROVIDE NEW LABELING ON NEW TELE/DATA DEVICE PER BUILDING FACILITY STANDARDS AND SPECIFICATIONS.

6. PROVIDE THREE POSITION SPEAKER SELECTOR SWITCH, FLUSH MOUNTED IN WALL CL AT 48" AFF, TO SELECT "a", "b" OR BOTH SETS OF CEILING MOUNTED SPEAKERS AS SHOWN. THREE POSITION SWITCH SHALL FUNCTION WITH OWNER FURNISHED SOUND SYSTEM AMPLIFIER. PROVIDE INPUT JACK ON THE SAME WALL PLATE FOR INPUT JACK CONNECTION OF EXTERNAL DEVICE. PROVIDE APPROVED SYSTEMS CABLING INTERCONNECTION BETWEEN SELECTOR SWITCHES LOCATED IN MULTIPURPOSE ROMM A AND MULTIPURPOSE ROOM B AS REQUIRED PER OWNER REQUIREMENTS AND SPECIFICATION. ELECTRICAL CONTRACTOR SHALL COORDINATE WITH OWNER REPRESENTATIVE FOR THE EXACT REQUIREMENTS AND SPECIFICATIONS PRIOR TO COMMENCING ANY WORK. SUBMIT A COMPLETE SHOP DRAWINGS SUBMITTALS INCLUDING INSTALLATION WIRING DIAGRAMS FOR OWNER REPRESENTATIVE, ARCHITECT AND ENGINEER REVIEW AND APPROVAL.

7. FLUSH MOUNT DEVICES IN WALL AT ACCESSIBLE LOCATION BEHIND FUTURE DISPLAY SCREEN. EC SHALL COORDINATE WITH GC FOR THE EXACT LOCATION AND MOUNTING HEIGHT PRIOR TO ROUGH-IN. SEE LV SYSTEMS GENERAL NOTES ON SHEET E0.2 FOR ELECTRICAL REQUIREMENTS AND ADDITIONAL INFORMATION.

8. NEW FIRE ALARM MANUAL PULL STATION TO MATCH EXISTING DEVICE. PROVIDE NEW TRANSPARENT PLASTIC COVER TO MATCH EXISTING COVER.

9. FOR LOW VOLTAGE SYSTEMS CABLES, PROVIDE (1) - 4" AND (2) - 2" EMPTY CONDUITS WITH PULLWIRES FROM EXISTING MAIN TELEPHONE BACKBOARD TO NEW TELECOM BACKBOARD (TBB) LOCATED AT MEZZANINE 201. PROVIDE PULLBOXES AS REQUIRED. EC SHALL FIELD VERIFY AND COORDINATE WITH LOW VOLTAGE SYSTEMS CONTRACTOR FOR THE EXACT SIZE AND QUANTITY OF CONDUITS PRIOR TO ROUGH-IN. EXACT ROUTING LOCATION OF CONDUITS SHALL BE DETERMINED IN THE FIELD.

10. TERMINATE CONDUITS AT 12" ABOVE MECHANICAL PLATFORM FINISHED FLOOR BELOW NEW TBB. SEE KEYNOTE #1 ON SHEET E4.1 FOR LOCATION AND ADDITIONAL INFORMATION.

11. CUT EXISTING CONCRETE SIDEWALK AS NEEDED FOR NEW UNDERGROUND EMPTY CONDUITS PROVISION FOR ALL NEW MECHANICAL EQUIPMENT CONTROL CONDUCTORS. FIELD VERIFY AND COORDINATE WITH MECHANICAL CONTRACTOR FOR THE EXACT SIZE AND QUANTITY OF EMPTY CONDUITS, INCLUDING ALL CONDUITS' TERMINATION LOCATIONS AND ADDITIONAL ELECTRICAL REQUIREMENTS PRIOR TO ROUGH-IN.

12. PROVIDE NEW PENDANT/SURFACE MOUNTED SPEAKER IN THIS ROOM TO MATCH EXISTING SPEAKERS LOCATED IN EXISTING GYMNASIUM 105 OR LOBBY 101. PROVIDE APPROVED LOW VOLTAGE SYSTEM CABLING CONNECTION TO NEW SOUND/PAGING SYSTEM EQUIPMENT, DEVICES, ETC. SEE LOW VOLTAGE SYSTEMS GENERAL NOTES ON SHEET E0.2 FOR NEW EQUIPMENT, DEVICES, ETC. PROVISIONS AND OTHER ADDITIONAL INFORMATION.

13. PROVIDE NEW SPEAKER, RECESSED MOUNTED IN THIS ROOM TO MATCH EXISTING SPEAKERS LOCATED IN EXISTING LOBBY101. PROVIDE APPROVED LOW VOLTAGE SYSTEM CABLING CONNECTION TO THE NEAREST AVAILABLE EXISTING SOUND/PAGING SYSTEM SPEAKERS CIRCUIT (FIELD VERIFY). MODIFY AND/OR EXPAND EXISTING SOUND/PAGING EQUIPMENT IF NECESSARY.

14. PROVIDE NEW PENDANT/SURFACE MOUNTED MUSIC SPEAKER IN THIS ROOM TO MATCH EXISTING MUSIC SPEAKERS LOCATED IN EXISTING GYMNASIUM 105. PROVIDE APPROVED LOW VOLTAGE SYSTEM CABLING CONNECTION AS REQUIRED.

RENOVATION FLOOR PLAN - SYSTEMS

A1 3/32"=1'

genesis engineering group, llc.
2601 Cattleman Rd., Suite 501
sarasota, fl 34232
project #19-051
www.genesis.net
cos #23304

FleischmanGarcia
ARCHITECTURE • PLANNING • INTERIOR DESIGN
SAFETY HARBOR OFFICE
195 FOURTH AVENUE NORTH
SAFETY HARBOR, FLORIDA 34695
PHONE (727) 725-8880
FAX (727) 725-9686
TAMPA OFFICE
3267 CATTLEMEN LANE, SUITE 6
SARASOTA, FLORIDA 34232
PHONE (941) 342-9293
FAX (941) 342-9253
324 HYDE PARK AVENUE, SUITE 300
TAMPA, FLORIDA 33606
PHONE (813) 251-4400
FAX (813) 251-4401
REGISTRATION NUMBER AA C000123

NEW TAMPA RECREATION CENTER ADDITION

TAMPA, FL 33647

THE DESIGN AND DRAWING IS THE SOLE PROPERTY OF FLEISCHMAN/GARCIA, INC. AND MAY NOT BE USED OR BE REPRODUCED WITHOUT PRIOR WRITTEN PERMISSION FROM FLEISCHMAN/GARCIA.

I CERTIFY TO THE BEST OF MY KNOWLEDGE THAT THESE DRAWINGS COMPLY W/ ALL RELEVANT BUILDING CODES

FGA PROJECT NUMBER
18015

ISSUE DATE
11/07/18

SHEET NUMBER
E2.1

11-12-18 Berrio Vezzoli\\20181819-051-FL New Tampa Rec Center Electrical\CAD\Electrical\18-051-FL New Tampa Rec Center - Electrical.dwg

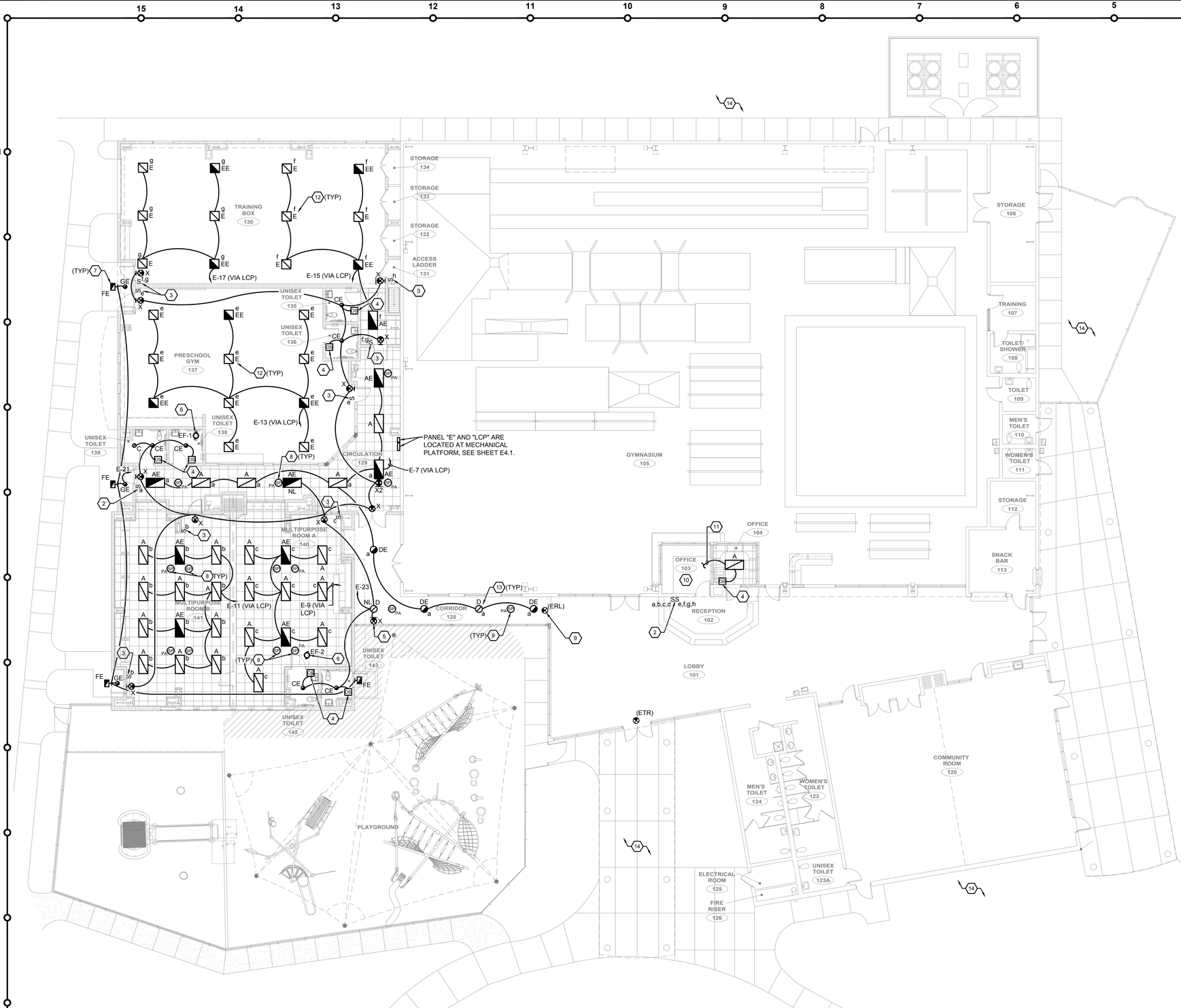

RENOVATION GENERAL NOTES

A. REFER TO FINAL APPROVED ARCHITECTURAL DEMOLITION AND RENOVATION FLOOR PLANS FOR OTHER ADDITIONAL INFORMATION.

B. SEE RENOVATION GENERAL NOTES ON SHEET E2.1 FOR ADDITIONAL INFORMATION.

C. REFER TO FINAL APPROVED ARCHITECTURAL REFLECTED CEILING PLAN FOR ADDITIONAL INFORMATION.

D. ALL EMERGENCY BATTERY PACK UNIT INTEGRAL WITH THE LIGHT FITURES SHALL BE CONNECTED TO UNSWITCHED LEG OF THE LOCAL LIGHTING BRANCH CIRCUIT IN ACCORDANCE WITH 2015 NFPA 101, CHAPTER 7 AND 2014 NEC, SECTION 700.12(F).

E. ALL LIGHT FIXTURES AND DEVICES ARE NEW, UNLESS OTHERWISE NOTED.

F. "NL" INDICATES NIGHT LIGHT FIXTURE.

G. ALL SUBTEXT (a, b, c, d, ETC.) AS SHOWN ADJACENT TO LIGHT FIXTURES INDICATES SWITCHING DESIGNATION.

H. SEE RENOVATION GENERAL NOTES ON SHEET E2.1 FOR ADDITIONAL INFORMATION.

I. EC SHALL PROVIDE A COMPLETE LIGHTING PHOTOMETRIC CALCULATIONS SHOP DRAWINGS SUBMITTALS IN ALL AREAS FOR REVIEW AND APPROVAL PRIOR TO INSTALLATIONS.

(X) RENOVATION KEYNOTES

1. LIGHTING CONTROL PANEL (LCP), SURFACE MOUNTED ON PLYWOOD BACKBOARD, TOP AT 6'-0" AFF. SEE LIGHTING CONTROL PANEL "LCP" NOTES ON SHEET E5.1 FOR ADDITIONAL INFORMATION.

2. LOW VOLTAGE SWITCHES. PROVIDE CONCEALED LOW VOLTAGE CABLE IN 3/4" C TO LIGHTING CONTROL PANEL "LCP". SEE LCP NOTE #2 ON SHEET E5.1 FOR ADDITIONAL INFORMATION. EC SHALL FIELD VERIFY AND COORDINATE WITH OWNER REPRESENTATIVE FOR THE EXACT LOCATION(S) OF THESE DEVICES PRIOR TO ROUGH-IN.

3. LOW VOLTAGE OVERRIDE SWITCH AS SHOWN. PROVIDE CONCEALED LOW VOLTAGE CABLING IN 3/4" C TO LIGHTING CONTROL PANEL "LCP". SEE LIGHTING CONTROL PANEL "LCP" SCHEDULE AND NOTES ON SHEET E5.1 FOR ADDITIONAL INFORMATION.

4. OCCUPANCY SENSOR (20A, 120V - PASSIVE INFRARED TECHNOLOGY), MOUNTED ON FLUSH MOUNTED OUTLET BOX IN WALL. PROVIDE CONCEALED WIRING CONNECTION TO LIGHT FIXTURES IN THIS ROOM.

5. PENDANT MOUNT EXIT LIGHT FROM STRUCTURE ABOVE. CENTER LINE OF FIXTURE FROM FINISHED FLOOR SHALL BE PER ADA CODE STANDARD REQUIREMENTS.

6. FHP, 115/1/60 EXHAUST FAN AS INDICATED. EXHAUST FAN IS FURNISHED WITH FACTORY INSTALLED FAN SPEED CONTROLLER/DISCONNECT SWITCH AND VARIAVLE SPEED ECM. SEE EXHAUST FAN SCHEDULE ON SHEET M2.1 FOR THE EXACT CONTROL REQUIREMENTS AND ADDITIONAL INFORMATION. ELECTRICAL CONTRACTOR SHALL FIELD VERIFY AND COORDINATE WITH MECHANICAL CONTRACTOR FOR THE EXACT CONTROL REQUIREMENTS PRIOR TO COMMENCING ANY WORK. PROVIDE APPROVED 120V LIQUIDTIGHT WIRING CONNECTION TO EXHAUST FAN ON ROOF. ALSO, PROVIDE CONCEALED 120V BRANCH CIRCUIT WIRING CONNECTION TO THE NEAREST GENERAL PURPOSE RECEPTACLE. NOTE: EXHAUST FAN SERVING ALL TOILET ROOMS WILL BE ACTIVATED AUTOMATICALLY WHEN EITHER TOILET ROOM IS OCCUPIED. FURNISH AND INSTALL APPROVED RELAY CONTACTORS AS REQUIRED AND PROVIDE APPROVED WIRING INTERCONNECTION TO MECHANICAL 'BAS' CONTROL PANEL. PROVIDE COMPLETE SHOP DRAWINGS INCLUDING ALL INSTALLATION WIRING DIAGRAMS, ETC.

7. PROVIDE NEW EXTERIOR LED LIGHT FIXTURE WITH INTEGRAL EMERGENCY BATTERY PACK UNIT. MAKE, FINISH AND VOLTAGE TO MATCH EXISTING (FIELD VERIFY). SUBMIT COMPLETE LIGHT FIXTURE SHOP DRAWING SUBMITTALS FOR OWNER / ARCHITECT REVIEW AND APPROVAL PRIOR TO INSTALLATION.

8. CEILING SPEAKERS AS SHOWN IN THIS ROOM ARE FOR LOCATION COORDINATION PURPOSES ONLY. SEE DESIGNTED KEYNOTE ON SHEET E2.1 FOR ELECTRICAL REQUIREMENTS AND ADDITIONAL INFORMATION (TYPICAL).

9. EXISTING EXIT LIGHT TO BE REMOVED AND RELOCATED AS SHOWN. EXTEND EXISTING BRANCH CIRCUIT AND RECONNECT.

10. ALL EXISTING LIGHT FIXTURES, DEVICES, ETC. IN THIS ROOM TO REMAIN.

11. PROVIDE NEW BRANCH CIRCUIT WIRING CONNECTION TO EXISTING LIGHT FIXTURES IN EXISTING OFFICE ROOM 103. FIELD VERIFY EXACT CURRENT CONNECTED LOAD OF EXISTING HOMERUN BRANCH CIRCUIT (A-36) PRIOR TO MAKE FINAL CONNECTION TO NEW LIGHT FIXTURE AS SHOWN.

12. BOTTOM OF LIGHT FIXTURE SHALL BE 15'-0" AFF. PROVIDE APPROVED PENDANT STEEL MOUNTING SUPPORTS WITH SAFETY CHAIN FROM STRUCTURE ABOVE. FIELD COORDINATE WITH MECHANICAL DUCTS AND PIPING. LIGHT FIXTURES MUST NOT BE ABOVE THE BOTTOM OF DUCTS AND PIPING. EXACT LOCATION AND MOUNTING HEIGHT OF ALL LIGHTING FIXTURES IN THIS AREA SHALL BE DETERMINED IN THE FIELD.

13. BOTTOM OF LIGHT FIXTURE SHALL BE 13'-0" AFF. PROVIDE APPROVED PENDANT STEEL MOUNTING SUPPORTS WITH SAFETY CHAIN FROM STRUCTURE ABOVE. FIELD COORDINATE WITH MECHANICAL DUCTS AND PIPING. LIGHT FIXTURES MUST NOT BE ABOVE THE BOTTOM OF DUCTS AND PIPING. EXACT LOCATION AND MOUNTING HEIGHT OF ALL LIGHTING FIXTURES IN THIS AREA SHALL BE DETERMINED IN THE FIELD.

14. ALL EXTERIOR LIGHT FIXTURES ARE EXISTING TO REMAIN. CLEAN AND RELAMP IF NEEDED. COORDINATE WITH OWNER REPRESENTATIVE PRIOR TO COMMENCING ANY WORK.

RENOVATION FLOOR PLAN - LIGHTING A1 3/32"=1'

genesis engineering group, llc.
2801 Cattleman Rd., Suite 501
sarasota, fl 34232
project #19-051
genesis
www.genesis-eng.net
cos #23304

FleischmanGarcia
ARCHITECTURE • PLANNING • INTERIOR DESIGN
SAFETY HARBOR OFFICE
195 FOURTH AVENUE NORTH
SAFETY HARBOR, FLORIDA 34695
PHONE (727) 724-8880
FAX (727) 725-9086
TAMPA OFFICE
3267 CATTLEMEN LANE, SUITE 6
SARASOTA, FLORIDA 34232
PHONE (941) 342-9292
FAX (941) 342-9293
324 HYDE PARK AVENUE, SUITE 300
TAMPA, FLORIDA 33606
PHONE (813) 251-4400
FAX (813) 251-4401
REGISTRATION NUMBER AA C000123

NEW TAMPA RECREATION CENTER ADDITION

TAMPA, FL 33647

THE DESIGN AND DRAWING IS THE SOLE PROPERTY OF FLEISCHMAN/GARCIA, INC. AND MAY NOT BE REPRODUCED WITHOUT PRIOR WRITTEN PERMISSION FROM FLEISCHMAN/GARCIA.

I CERTIFY TO THE BEST OF MY KNOWLEDGE THAT THESE DRAWINGS COMPLY W/ ALL RELEVANT BUILDING CODES

FGA PROJECT NUMBER
18015

ISSUE DATE
11/07/18

SHEET NUMBER
E3.1

11-12-18 Benito Verzosa\\ 20181819-051-FL New Tampa Rec Center Electrical\CAD\Electrical\19-051-FL New Tampa Rec Center - Electrical.dwg

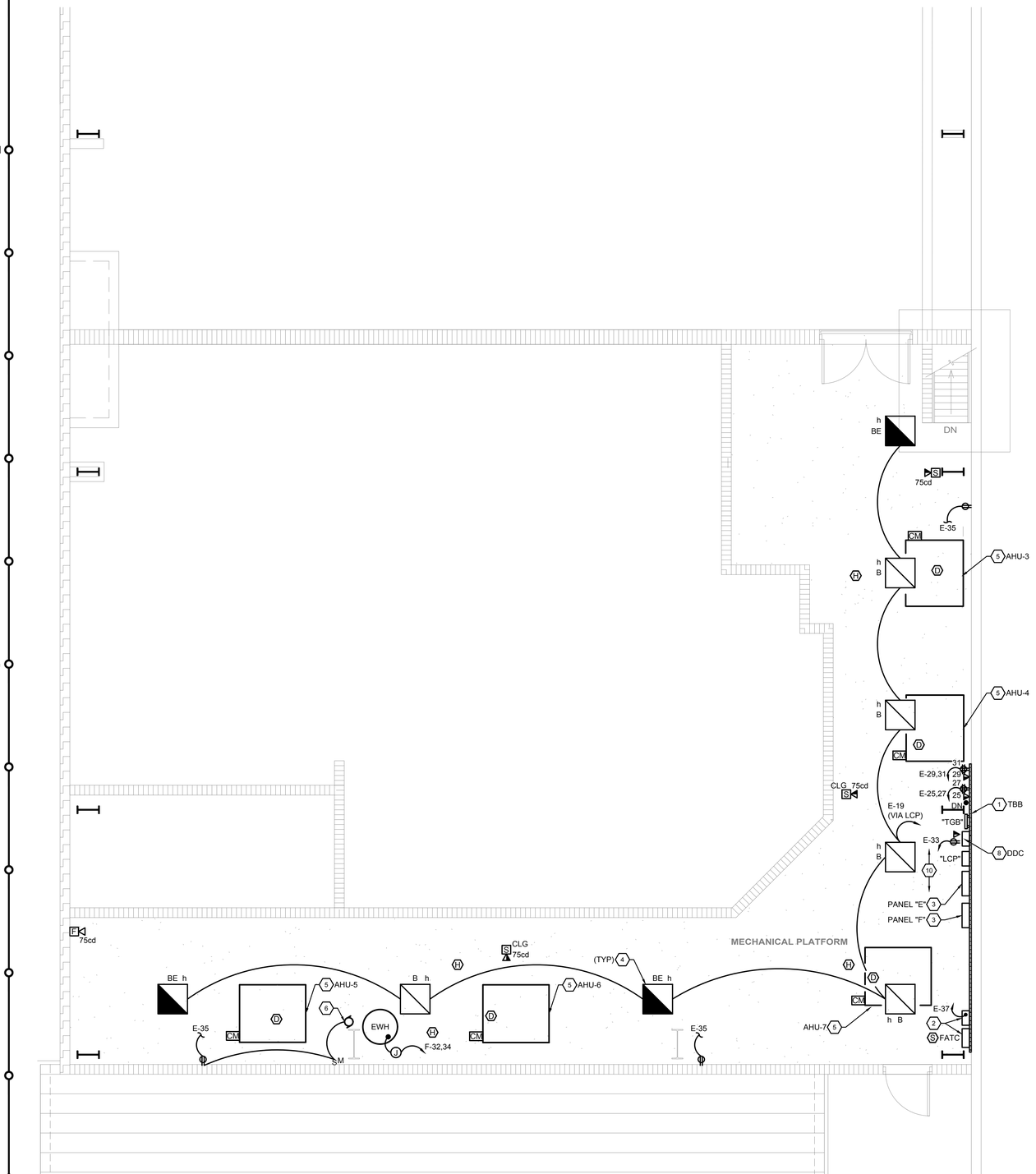

1 **MECHANICAL PLATFORM FLOOR PLAN (ADDITION) - LIGHTING, POWER AND SYSTEMS**
SCALE: 1/4"=1'-0"

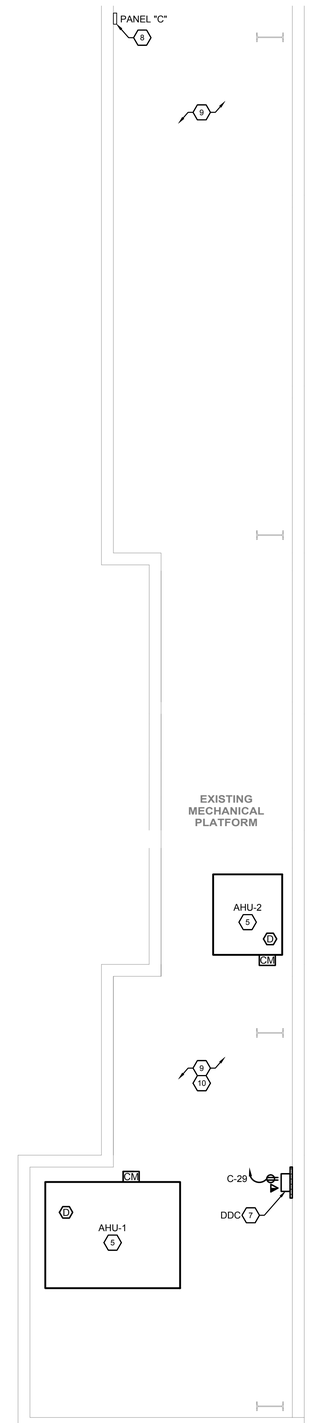

2 **MECHANICAL PLATFORM FLOOR PLAN (EXISTING) - POWER AND SYSTEMS**
SCALE: 1/4"=1'-0"

GENERAL NOTES

A. SEE DEMOLITION GENERAL NOTES ON SHEET E1.1 FOR ADDITIONAL INFORMATION.

B. SEE RENOVATION GENERAL NOTES ON SHEETS E2.1 AND E3.1 FOR ADDITIONAL INFORMATION

RENOVATION KEYNOTES

1. FOR NEW TTB WITH TELECOM EQUIPMENT, DEVICES, ETC., PROVIDE FIRE RATED PLYWOOD BACKBOARDS WITH WHITE FIRE RETARDANT PAINT ALL AROUND AND BOLTED TO WALL.
NOTE: FIRE RATED PLYWOOD BACKBOARD WITH FIRE RETARDANT PAINT SHALL BE FACTORY MADE AND SHALL BE ORDERED FROM U-TECK COMPANY OR ANY OTHER REPUTABLE COMPANIES. SEE LOW VOLTAGE SYSTEMS GENERAL NOTES ON SHEET E0.2 FOR NEW PROVISIONS OF LOW VOLTAGE SYSTEMS EQUIPMENT, DEVICES, ETC. AND OTHER ADDITIONAL INFORMATION. PROVIDE NEW TELECOM GROUNDING BUSBAR (TGB) AS SHOWN. SEE TELECOM GROUNDING BUSBAR DETAIL ON SHEET E7.1 FOR ADDITIONAL INFORMATION.

2. PROVIDE NEW FIRE ALARM TERMINAL CABINET WITH KEYLOCK DOOR AND POWER SUPPLY IN SEPARATE RED NEMA-1 ENCLOSURE, SURFACE MOUNTED ON FIRE RATED PLYWOOD BACKBOARD AS SHOWN. SEE PARTIAL FIRE ALARM RISER DIAGRAM ON SHEET E6.2 FOR ADDITIONAL INFORMATION. PROVIDE WP DRIP PAN ON TOP OF EACH FIRE ALARM SYSTEM EQUIPMENT ENCLOSURE AND PROVIDE WP INSTALLATION.

3. PROVIDE NEW PANELBOARD AS INDICATED, SURFACE MOUNTED ON FIRE RATED PLYWOOD BACKBOARD AS SHOWN, TOP OF ENCLOSURE AT 6'-0" AFF. PROVIDE WP DRIP PAN ON TOP OF ELECTRICAL EQUIPMENT ENCLOSURE AND PROVIDE WP INSTALLATION.

4. PROVIDE APPROVED PENDANT MOUNT SUPPORTS FROM BUILDING STRUCTURE ABOVE FOR EACH LIGHT FIXTURE IN THIS MEZZANINE AREA. COORDINATE WITH MECHANICAL DUCTS AND PIPES. EXACT LOCATION SHALL BE DETERMINED IN THE FIELD.

5. NEW MECHANICAL EQUIPMENT AS INDICATED (FURNISHED WITH VFD). SEE EQUIPMENT CONNECTION SCHEDULE AND MECHANICAL EQUIPMENT GENERAL NOTES ON SHEET E5.2 FOR ELECTRICAL REQUIREMENTS AND ADDITIONAL INFORMATION. SEE FINAL APPROVED MECHANICAL PLANS FOR EXACT LOCATION OF VFD, DUCT SMOKE DETECTOR(S), ETC. SEE AHU SCHEDULE ON SHEET M2.1 FOR ADDITIONAL ELECTRICAL INFORMATION.

6. FHP, 115/1/60 HOT WATER CIRCULATING PUMP (PUMP IS CONTROLLED BY FURNISHED TIMECLOCK UNDER MECHANICAL DIVISION). PROVIDE 20A,1P, 120V MOTOR RATED AC TOGGLE SWITCH, SURFACE MOUNT ON WALL ADJACENT TO PUMP. PROVIDE LIQUIDTIGHT FLEXIBLE WIRING CONNECTION TO PUMP. PROVIDE BRANCH CIRCUIT WIRING CONNECTION VIA FURNISHED TIMECLOCK.

7. NEW DDC CONTROL PANEL (FURNISHED AND INSTALLED BY MECHANICAL CONTRACTOR). PROVIDE DUPLEX RECEPTACLE AND DATA OUTLETS AS SHOWN. EC SHALL COORDINATE WITH MC FOR THE EXACT ELECTRICAL REQUIREMENTS PRIOR TO COMMENCING ANY WORK. SEE FINAL APPROVED MECHANICAL PLANS AND SHOP DRAWINGS SUBMITTALS FOR ADDITIONAL ELECTRICAL WORK REQUIREMENTS.

8. EXISTING PANEL "C" LOCATED IN STORAGE ROOM 106 BELOW.

9. ALL OTHER EXISTING LIGHTING, POWER AND SYSTEMS EQUIPMENT, DEVICES, ETC. LOCATED IN EXISTING MEZZANINE AREA TO REMAIN, UNLESS OTHERWISE NOTED.

10. ELECTRICAL CONTRACTOR SHALL FIELD VERIFY FOR THE EXACT LOCATION OF ALL ELECTRICAL POWER AND LOW VOLTAGE SYSTEMS EQUIPMENT, DEVICES, ETC. IN THIS AREA. PROVIDE PAINTED AREA OF 12'-0" WIDE X 3'-0" DEEP IN FRONT OF ALL ELECTRICAL EQUIPMENT AS SHOWN. THIS DIMENSIONED WORKING CLEARANCE SHALL BE MAINTAINED AT ALL TIME. THERE SHALL BE NO STORAGE ITENS IN THIS AREA. PAINT FLOOR AREA WITH YELLOW BACKGROUND WITH 3 INCHES TO 4 INCHES RED LETTERS INDICATING "ELECTRICAL SPACE ONLY, NO STORAGE ALLOWED".

MECHANICAL PLATFORM FLOOR PLANS - LIGHTING, POWER AND SYSTEMS

A1
1/4"=1'

genesis engineering group, llc.
2601 Cattleman Rd., Suite 501
sarasota, fl 34232
project #19-651
genesis
www.genengi.net
cos #23304

FleischmanGarcia
ARCHITECTURE • PLANNING • INTERIOR DESIGN
SAFETY HARBOR OFFICE
195 FOURTH AVENUE NORTH
SAFETY HARBOR, FLORIDA 34695
PHONE (727) 725-8880
FAX (727) 725-9086
TAMPA OFFICE
324 HYDE PARK AVENUE, SUITE 300
TAMPA, FLORIDA 33606
PHONE (813) 251-4400
FAX (813) 251-2446
5967 CATTLEMEN LANE, SUITE 6
SARASOTA, FLORIDA 34232
PHONE (941) 342-9292
FAX (941) 342-9233
REGISTRATION NUMBER AA C000123

NEW TAMPA RECREATION CENTER ADDITION

TAMPA, FL 33647

THE DESIGN AND DRAWING IS THE SOLE PROPERTY OF FLEISCHMAN/GARCIA, INC. AND MAY NOT BE USED OR REPRODUCED WITHOUT PRIOR WRITTEN PERMISSION FROM FLEISCHMAN/GARCIA.

I CERTIFY TO THE BEST OF MY KNOWLEDGE THAT THESE DRAWINGS COMPLY W/ ALL RELEVANT BUILDING CODES

FGA PROJECT NUMBER
18015

ISSUE DATE
11/07/18

SHEET NUMBER
E4.1

11-12-18 Benito Verzosa\#20180185-051-FL New Tampa Rec Center Electrical\CAD\Electrical\18-051-FL New Tampa Rec Center - Electrical.dwg

PROGRAMMABLE LIGHTING CONTROL PANEL "LCP" SCHEDULE

RELAY	SOURCE CKT.	LOAD DESCRIPTION	VOLTAGE	SWITCH ID	CONTROL
1	E-7	LIGHTING - CORRIDOR 128 AND CIRCULATION 128	120	a	MANUAL "ON", TIME CLOCK "OFF"
2	E-9	LIGHTING - MULTI-PURPOSE ROOM 140	120	b	MANUAL "ON", TIME CLOCK "OFF"
3	E-11	LIGHTING - MULTI-PURPOSE ROOM 141	120	c	MANUAL "ON", TIME CLOCK "OFF"
4	E-13	LIGHTING - PRESCHOOL GYM 137	120	e	MANUAL "ON", TIME CLOCK "OFF"
5	E-15	LIGHTING - TRAINING BOX 134	120	f	MANUAL "ON", TIME CLOCK "OFF"
6	E-17	LIGHTING - TRAINING BOX 134	120	g	MANUAL "ON", TIME CLOCK "OFF"
7	E-19	LIGHTING - MECHANICAL PLATFORM	120	h	MANUAL "ON", TIME CLOCK "OFF"
8	E-21	LIGHTING - EXTERIOR	120	-	TIMECLOCK "ON", TIME CLOCK "OFF"

LIGHTING CONTROL PANEL (MODEL # ILC-AP3-8) SHALL HAVE ASTRONOMIC TIMECLOCK AND DIGITAL MODEM IN NEMA-1 ENCLOSURE WITH LOCKABLE DOOR.
SEE LIGHTING CONTROL PANEL (LCP) NOTES, THIS SHEET, FOR ADDITIONAL INFORMATION.

LIGHTING CONTROL PANEL (LCP) NOTES

PROVIDE COMPLETE LIGHTING CONTROL SYSTEM AND LIGHTING CONTROL PANEL (LCP). LCP SHALL BE 20A, 8P CIRCUITS, PROGRAMMABLE WITH ASTRONOMIC TIMECLOCK, 120V COIL IN NEMA-1 ENCLOSURE WITH LOCKABLE DOOR, SURFACE MOUNTED ON PLYWOOD BACKBOARD. LIGHTING CONTROL PANEL SHALL INCLUDE THE FOLLOWING:

1. OVERRIDE PUSHBUTTON AND ALL ASSOCIATED CONTROL WIRING.
2. TWO LOW VOLTAGE (4) - BUTTON OVERRIDE SWITCHES (a, b, c, d (Master) AND (e, f, g, h) SHALL ALLOW AN OCCUPANT TO KEEP THE LIGHTS ON FOR ADDITIONAL TWO (2)-HOURS AND SHALL HAVE A PILOT LIGHT NEATLY LABELED DESCRIBING THE AREA IT CONTROLS.
3. ALL COMPONENTS SHALL BE FROM THE SAME MANUFACTURER.
4. COORDINATE EXACT TIME SETTING WITH THE OWNER.
5. PROVIDE PHOTOCELL DEVICE MOUNTED AT EAVE (NORTH WALL) FACING NORTH.
6. PROVIDE LOW VOLTAGE CONCEALED CABLING CONNECTION TO LOW VOLTAGE SWITCHES. SEE LIGHTING CONTROL PANEL (LCP) SCHEDULE, THIS SHEET, FOR ADDITIONAL INFORMATION.

LUMINAIRES SCHEDULE

TAG	TYPE	MANUFACTURER	CATALOG NUMBER	VOLT	LAMP	WATTS	LUMENS	INSTALLATION	REMARKS
A	2X4 LED LAY-IN GRID TROFFER	H.E. WILLIAMS	PT-24-L38-835-RA-DIM-UNV	120	LED/3500K	31	3,800	RECESSED	
AE	2X4 LED LAY-IN GRID TROFFER WITH EMERGENCY BATTERY PACK (1400 LUMENS)	H.E. WILLIAMS	PT-24-L38-835-RA-EM/10W-DIM-UNV	120	LED/3500K	31	3,800	RECESSED	
B	LED HIGH-BAY	ILP	HHB-65WLED-UNIV-40-FRL	120	LED/3500K	65	8,515	PENDANT	
BE	LED HIGH-BAY W/ EMERGENCY BATTERY PACK (1600 LUMENS)	ILP	HHB-65WLED-EM/10W-UNIV-40-FRL	120	LED/3500K	65	8,515	PENDANT	
C	LED DOWNLIGHT WITH LENS	LUMINAIRE	ARV13-25W-3500K-120-OP-WHT	120	LED/3500K	27.5	2,358	SURFACE	
CE	LED DOWNLIGHT WITH INTEGRAL EMERGENCY BATTERY PACK UNIT	LUMINAIRE	ARV13-25W-3500K-120-OP-WHT-EMB310	120	LED/3500K	27.5	2,358	SURFACE	
D	ROUND CYLINDER DOWNLIGHT	LITON	LCALD6-350-B70-T35 (FINISH TO MATCH EXISTING)	120	LED/3500K	43.28	3,700	PENDANT	
DE	ROUND CYLINDER DOWNLIGHT W/ INTEGRAL EMERGENCY BATTERY PACK (1400 LUMENS)	LITON	LCALD6EM-350-B70-T35 (FINISH TO MATCH EXISTING)	120	LED/3500K	43.28	3,700	PENDANT	
E	LED HIGH-BAY	ILP	HHB-135WLED-UNIV-40-FRL	120	LED/3500K	132.1	15,529	PENDANT W/ SAFETY CHAIN	
EE	LED HIGH-BAY W/ EMERGENCY BATTERY PACK (1600 LUMENS)	ILP	HHB-135WLED-EM/12W-UNIV-40-FRL	120	LED/3500K	132.1	15,529	PENDANT W/ SAFETY CHAIN	
FE	LED WALL PACK W/ INTEGRAL EMERGENCY BATTERY PACK (1400 LUMENS). WET LOCATION	TO MATCH EXISTING	TO MATCH EXISTING (FIELD VERIFY)	120	LED/3500K	80	TO MATCH EXISTING	SURFACE	
GE	LED DOWNLIGHT WITH LENS & WITH INTEGRAL EMERGENCY BATTERY PACK UNIT. WET LOCATION	LUMINAIRE	ARV13-25W-3500K-120-OP-WHT-EMB310	120	LED/3500K	37.5	2,358	SURFACE	
X	LED SINGLE FACE EXIT LIGHT W/ RED LETTERS WITH EMERGENCY BATTERY PACK UNIT	CHLORIDE	CLXNRW	120	LED	5	-	SURFACE UNIVERSAL	
X2	LED DOUBLE FACE EXIT LIGHT W/ RED LETTERS WITH EMERGENCY BATTERY PACK UNIT	CHLORIDE	CLXNRW	120	LED	5	-	SURFACE UNIVERSAL	

GENERAL NOTES:

1. NO SUBSTITUTION.
2. ALL FIXTURES TO BE PROVIDED WITH LAMPS INSTALLED.
3. ALL FIXTURES TO BE PROVIDED WITH REQUIRED MOUNTING HARDWARE FOR INSTALLATION TYPE SHOWN.
4. SEE LIGHTING FLOOR PLAN FOR EXIT LIGHTS' DIRECTIONAL ARROW(S) INDICATION.
4. ALL FINISH SHALL BE BY ARCHITECT.

ELECTRICAL SCHEDULES AND NOTES

A1
NTS

genesis engineering group, llc.
2801 Cattleman Rd., Suite 501
sarasota, fl 34232
project #19-651
genesis
www.genengi.net
cos #23304

FleischmanGarcia
ARCHITECTURE • PLANNING • INTERIOR DESIGN
SAFETY HARBOR OFFICE
195 FOURTH AVENUE NORTH
SAFETY HARBOR, FLORIDA 34695
PHONE (727) 725-8880
FAX (727) 725-9086
TAMPA OFFICE
324 HYDE PARK AVENUE, SUITE 300
TAMPA, FLORIDA 33606
PHONE (813) 251-4400
FAX (813) 251-4500
SARASOTA OFFICE
5967 CATTLEMEN LANE, SUITE 6
SARASOTA, FLORIDA 34232
PHONE (941) 342-9292
FAX (941) 342-9233
REGISTRATION NUMBER AA C000123

NEW TAMPA RECREATION CENTER ADDITION

TAMPA, FL 33647

THIS DESIGN AND DRAWING IS THE SOLE PROPERTY OF FLEISCHMAN/GARCIA, INC. NO PART OF THIS DRAWING MAY BE REPRODUCED WITHOUT PRIOR WRITTEN PERMISSION FROM FLEISCHMAN/GARCIA.

I CERTIFY TO THE BEST OF MY KNOWLEDGE THAT THESE DRAWINGS COMPLY W/ ALL RELEVANT BUILDING CODES

FGA PROJECT NUMBER
18015

ISSUE DATE
11/07/18

SHEET NUMBER
E5.1

11-12-18 Benito Verzosa\\2018\18-051-FL New Tampa Rec Center Electrical\CAD\Electrical\18-051-FL New Tampa Rec Center - Electrical.dwg

EQUIPMENT CONNECTION SCHEDULE (ECS)

EQUIPMENT							EQUIPMENT DISCONNECT SWITCH				CONTROLLER			CIRCUITING			FIRE ALARM INTERCONNECTION			
EQUIP. #	DESCRIPTION	LOCATION	HP/KW/W	MCA/FLA	VOLT	PHASE	LOCATION	RATING	TYPE	NEMA ENCLOSURE	LOCATION	TYPE	NEMA ENCLOSURE	PANEL-CKT	CIRCUIT BREAKER	WIRING	FAN SHUTDOWN	RETURN DUCT SMOKE	SUPPLY DUCT SMOKE	REMARKS
CH-1	CHILLER #1	SEE PLANS	67.12 KW	261.2 MCA	208	3	AU	400A	NF	3R	REFER TO FINAL APPROVED MECHANICAL EQUIPMENT SCHEDULES			MDP-13,15,17	300A/3P	3-500 KCMIL THWN/THHN CU, 1#2 EGC CU - 3" C				1, 3
CH-2	CHILLER #2	SEE PLANS	67.12 KW	261.2 MCA	208	3	AU	400A	NF	3R				MDP-19,21,23	300A/3P	3-500 KCMIL THWN/THHN CU, 1#2 EGC CU - 3" C				1, 3
P-1	CHILLED WATER PUMP P-1	SEE PLANS	10 HP	32.2 FLA	208	3	AU	60A	NF	3R	VFD (FWE)			MDP-2,4,6	70A/3P	3 #1 THWN/THHN CU, 1#4 EGC CU - 1 1/2" C				2, 3
P-2	CHILLED WATER PUMP P-2	SEE PLANS	10 HP	32.2 FLA	208	3	AU	60A	NF	3R	VFD (FWE)			MDP-8,10,12	70A/3P	3 #1 THWN/THHN CU, 1#4 EGC CU - 1 1/2" C				2, 3
AHU-1	AIR HANDLING UNIT	SEE PLANS	10 HP FAN MOTOR	32.2 FLA	208	3	AU	60A	VFD (FWE), NF	1				C-7,9,11	70A/3P	3 #4 THWN/THHN CU, 1#8 EGC CU - 1" C	X	X	X	3, 4
			53 KW UNIT HEATER	147.12 FLA	208	3	AU	200A	NF	1				MDP-7,9,11	200A/3P	3-250 KCMIL THWN/THHN CU, 1#2 EGC CU - 2 1/2" C				3, 5
AHU-2	AIR HANDLING UNIT	SEE PLANS	3 HP FAN MOTOR	11 FLA	208	3	AU	30A	VFD (FWE), NF	1				C-8,10,12	25A/3P	3 #10 THWN/THHN CU, 1#10 EGC CU - 3/4" C	X	X	X	3, 4
			5 KW UNIT HEATER	13.88 FLA	208	3	AU	30A	NF	1				C-2,4,6	20A/3P	3 #12 THWN/THHN CU, 1#12 EGC CU - 3/4" C				3, 5
AHU-3	AIR HANDLING UNIT	SEE PLANS	5 HP FAN MOTOR	17.5 FLA	208	3	AU	60A	VFD (FWE), NF	1				F-7,9,11	40A/3P	3 #8 THWN/THHN CU, 1#10 EGC CU - 3/4" C	X	X	X	3, 4
			13 KW UNIT HEATER	36.09 FLA	208	3	AU	60A	NF	1				F-1,3,5	50A/3P	3 #8 THWN/THHN CU, 1#10 EGC CU - 3/4" C				3, 5
AHU-4	AIR HANDLING UNIT	SEE PLANS	5 HP FAN MOTOR	17.5 FLA	208	3	AU	60A	VFD (FWE), NF	1				F-19,21,23	40A/3P	3 #8 THWN/THHN CU, 1#10 EGC CU - 3/4" C	X	X	X	3, 4
			18 KW UNIT HEATER	49.97 FLA	208	3	AU	100A	NF	1				F-13,15,17	70A/3P	3 #4 THWN/THHN CU, 1#8 EGC CU - 1" C				3, 5
AHU-5	AIR HANDLING UNIT	SEE PLANS	1.5 HP FAN MOTOR	6.9 FLA	208	3	AU	30A	VFD (FWE), NF	1				F-31,33,35	15A/3P	3 #12 THWN/THHN CU, 1#12 EGC CU - 3/4" C	X	X	X	3, 4
			8 KW UNIT HEATER	22.21 FLA	208	3	AU	30A	NF	1				F-25,27,29	30A/3P	3 #10 THWN/THHN CU, 1#10 EGC CU - 3/4" C				3, 5
AHU-6	AIR HANDLING UNIT	SEE PLANS	1.5 HP FAN MOTOR	6.9 FLA	208	3	AU	30A	VFD (FWE), NF	1				F-14,16,18	15A/3P	3 #12 THWN/THHN CU, 1#12 EGC CU - 3/4" C	X	X	X	3, 4
			8 KW UNIT HEATER	22.21 FLA	208	3	AU	30A	NF	1				F-8,10,12	30A/3P	3 #10 THWN/THHN CU, 1#10 EGC CU - 3/4" C				3, 5
AHU-7	AIR HANDLING UNIT	SEE PLANS	5 HP FAN MOTOR	17.5 FLA	208	3	AU	60A	VFD (FWE), NF	1				F-26,28,30	40A/3P	3 #8 THWN/THHN CU, 1#10 EGC CU - 3/4" C	X	X	X	3, 4
			8 KW UNIT HEATER	22.21 FLA	208	3	AU	30A	NF	1				F-20,22,24	30A/3P	3 #10 THWN/THHN CU, 1#10 EGC CU - 3/4" C				3, 5
EF-1	EXHAUST FAN	SEE PLANS	41.7 W	-	120	1	AU	20A	1PST SWITCH	1				INTERLOCK W/ LIGHTS OS	-	2 #12 THWN/THHN CU, 1#12 EGC CU - 3/4"C				3, 6
EF-2	EXHAUST FAN	SEE PLANS	83.4 W	-	120	1	AU		1PST SWITCH	1				INTERLOCK W/ LIGHTS OS	-	2 #12 THWN/THHN CU, 1#12 EGC CU - 3/4"C				3, 6
EWH	WATER HEATER	SEE PLANS	4.5KW		208	1	AU	30A	NF	1				F-32,34	30A/2P	2 #10 THWN/THHN CU, 1#10 EGC CU - 3/4" C				3, 7

GENERAL NOTES - EQUIPMENT CONNECTION SCHEDULE:

1. SCHEDULE IS TO INDICATE CONNECTIONS TO MECHANICAL DEVICES, AUXILIARY DEVICES, AND OTHER SUCH UTILIZATION EQUIPMENT.
2. COORDINATE FINAL EQUIPMENT LOCATIONS WITH APPLICABLE DRAWINGS AND TRADE.
3. ALL FIXTURES TO BE SUPPLIED WITH REQUIRED MOUNTING HARDWARE FOR INSTALLATION TYPE SHOWN.
4. NOT ALL REQUIRED CIRCUITING AND WORK IS NECESSARILY SHOWN ON SCHEDULE. PROVIDE ALL WORK AS SHOWN AND AS INDICATED ELSEWHERE.
5. PROVIDE CIRCUITING COMPLETE FROM SOURCE TO EQUIPMENT (LOAD). CIRCUIT SHALL BE SUPPLIED TO AND FROM ALL CONTROLLERS, DISCONNECTS, AND AS OTHERWISE INDICATED OR SHOWN.
6. EQUIPMENT SHOWN PER BASIS OF DESIGN. SEE FINAL APPROVED EQUIPMENT SHOP DRAWINGS SUBMITTALS AND COORDINATE WITH MECHANICAL CONTRACTOR FOR THE EXACT ELECTRICAL REQUIREMENTS AND ADDITIONAL INFORMATION PRIOR TO START OF CONSTRUCTION. NOTIFY OWNER REPRESENTATIVE IMMEDIATELY FOR ANY CONFLICT OR DISCREPANCY.
7. CIRCUIT NUMBERS ARE TO INDICATE PIECES OF EQUIPMENT CIRCUITED TOGETHER. PROVIDE CIRCUIT NUMBERING AS REQUIRED TO BALANCE LOADS ACROSS ALL PHASES.
8. NOT ALL DISCONNECT LOCATIONS SHOWN ON PLANS. WHERE NOT SHOWN, INSTALL WITHIN SITE OF EQUIPMENT AND PER ALL NEC REQUIREMENTS FOR DISCONNECT LOCATIONS, INCLUDING DISTANCE FROM EQUIPMENT.
9. "AU" INDICATES AT UNIT.
10. "EC" INDICATES ELECTRICAL CONTRACTOR.
11. "FWE" INDICATES FURNISHED WITH EQUIPMENT .
12. "NF" INDICATES NOT FUSED.
13. "OS" INDICATES OCCUPANCY SENSOR.
14. UNLESS NOTED OTHERWISE, DUCT SMOKE DETECTORS INDICATE FIRE ALARM CONNECTION TO DEVICES SUPPLIED BY OTHERS.
15. UNLESS NOTED OTHERWISE, DISCONNECTS AND CONTROLLERS SHALL BE FURNISHED AND INSTALLED BY EC.

REMARKS - EQUIPMENT CONNECTION SCHEDULE:

1. PACKAGED CHILLER FURNISHED WITH NON-FUSED DISCONNECT SWITCH AND EC SHALL PROVIDE SINGLE POINT POWER CONNECTION (LIQUIDTIGHT (SEALTIGHT) FLEXIBLE WIRING CONNECTION TO UNIT).
2. CHILLED WATER PUMP IS FURNISHED WITH VFD AS INDICATED IN THE MECHANICAL EQUIPMENT ECHEDULES. PROVIDE LIQUIDTIGHT (SEALTIGHT) FLEXIBLE WIRING CONNECTION TO PUMP FROM PROVIDED DISCONNECT SWITCH BY EC. FIELD VERIFY WITH MECHANICAL CONTRACTOR FOR THE EXACT ELECTRICAL REQUIREMENTS AND ADDITIONAL INFORMATION PRIOR TO COMMENCING ANY WORK.
3. PROVIDE ENGRAVED NAMEPLATE ON ELECTRICAL EQUIPMENT.
4. PROVIDE SEPARATE FLEXIBLE WIRING POWER CONNECTION FROM DISCONNECT SWITCH TO BLOWER FAN MOTOR.
5. PROVIDE SEPARATE FLEXIBLE WIRING POWER CONNECTION FROM DISCONNECT SWITCH TO HEATER UNIT.
6. PROVIDE 20A,1P, 120V MOTOR RATED TOGGLE SWITCH ADJACENT TO EXHAUST FAN WITH FLEXIBLE WIRING CONNECTION. PROVIDE INTERLOCK WIRING INTERCONNECTION TO LIGHT FIXTURE IN TOILET.
7. PROVIDE 20A,1P, 120V MOTOR RATED TOGGLE SWITCH ADJACENT TO RECIRCULATING PUMP WITH FLEXIBLE WIRING CONNECTION. PROVIDE 120V POWER CONNECTION TO THE NEAREST DUPLEX RECEPTACLE AHEAD OF GFI DEVICE LOCATED IN MECHANICAL PLATFORM.

MECHANICAL EQUIPMENT GENERAL NOTES

A. ELECTRICAL CONTRACTOR (EC) SHALL COORDINATE DISCONNECT, CIRCUIT BREAKER, ASSOCIATED WIRING AND CONDUIT WITH FINAL APPROVED MECHANICAL SHOP DRAWINGS SUBMITTALS PRIOR TO ORDERING ELECTRICAL EQUIPMENT. IF SIZE(S) OF ELECTRICAL EQUIPMENT REQUIRED DIFFERS FROM WHAT IS INDICATED ON ELECTRICAL PLANS, NOTIFY ELECTRICAL ENGINEER OF RECORD IMMEDIATELY OF CHANGES.

B. DO NOT LOCATE ELECTRICAL EQUIPMENT AND/OR DEVICES OVER MECHANICAL EQUIPMENT ACCESS PANELS.

C. PROVIDE 3/4" EMPTY CONDUITS THROUGH INACCESSIBLE LOCATIONS (I.E. WALLS, UNDER FLOOR SLAB) FOR ALL EQUIPMENT CONTROL WIRING. FIELD VERIFY FOR THE EXACT QUANTITY AND LOCATION AND COORDINATE WITH OTHER TRADES PRIOR TO ROUGH-IN.

D. ELECTRICAL DESIGN IS BASED ON THE MANUFACTURER AND MODEL NUMBER LISTED ON THE MECHANICAL PLANS. IF THERE IS AN EQUAL OR ALTERNATE MANUFACTURER PROVIDED, THE MECHANICAL/GENERAL CONTRACTOR SHALL BEAR ANY AND ALL ADDITIONAL COST RELATED TO THE ELECTRICAL CHANGES ASSOCIATED WITH SUCH SUBSTITUTIONS.

E. ELECTRICAL CONTRACTOR SHALL PROVIDE ALL STARTERS FURNISHED BY MECHANICAL CONTRACTOR, UNLESS STARTERS ARE SPECIFICALLY NOTED ON MECHANICAL PLANS TO BE FACTORY INSTALLED (SEE GENERAL NOTE D). PROVIDE ALL FINAL CONNECTIONS.

F. PROVIDE LIQUIDTIGHT (SEALTIGHT) FLEXIBLE WIRING CONNECTION FOR ALL MECHANICAL EQUIPMENT LOCATED OUTSIDE THE BUILDING.

G. SEE FINAL APPROVED MECHANICAL DRAWINGS FOR THE EXACT LOCATION OF ALL EQUIPMENT AND COORDINATE WITH OTHER TRADES PRIOR TO COMMENCING ANY WORK.

H. SEE FIRE ALARM SYSTEM GENERAL NOTES ON SHEET E-6.2 FOR EXACT DUCT SMOKE DETECTORS PROVISION REQUIREMENTS AND ADDITIONAL INFORMATION.

I. IT IS THE RESPONSIBILITY OF THE ELECTRICAL CONTRACTOR TO DETERMINE THE EXACT ROUTING AND EXACT LENGTH OF HOMERUN FEEDER AND HOMERUN BRANCH CIRCUITS WIRING. IF THE HOMERUN FEEDER AND BRANCH CIRCUITS WIRING EXCEED 75 FEET, THE ELECTRICAL CONTRACTOR SHALL ADJUST CONDUCTORS AND CONDUIT SIZES AS REQUIRED TO ACCOMMODATE VOLTAGE DROP (2% MAX. FOR ALL FEEDERS AND 3% MAX. FOR ALL BRANCH CIRCUITS PER 2017, 6TH EDITION, FLORIDA BUILDING CODE ENERGY CONSERVATION SECTIONS 505.7.3.1 AND 505.7.3.2 RESPECTIVELY).

ELECTRICAL SCHEDULES AND NOTES

A1
NTS

genesis engineering group, llc.
2601 Cattleman Rd, Suite 501
sarasota, fl 34232
project #18-051
coa #29304
genesis
www.geneng.net

FleischmanGarcia
ARCHITECTURE • PLANNING • INTERIOR DESIGN
SAFETY HARBOR OFFICE
195 FOURTH AVENUE NORTH
SAFETY HARBOR, FLORIDA 34695
PHONE (727) 725-8880
FAX (727) 725-3900
TAMPA OFFICE
324 HYDE PARK AVENUE, SUITE 300
TAMPA, FLORIDA 33606
PHONE (813) 251-4400
FAX (813) 251-1994
REGISTRATION NUMBER AA C000123
SARASOTA OFFICE
5967 CATTLEMEN LANE, SUITE 6
SARASOTA, FLORIDA 34232
PHONE (941) 342-9293
FAX (941) 342-9253

NEW TAMPA RECREATION CENTER ADDITION

TAMPA, FL 33647

THIS DESIGN AND DRAWING IS THE SOLE PROPERTY OF FLEISCHMANGARCIA. NO PART OF THIS WORK MAY BE REPRODUCED WITHOUT PRIOR WRITTEN PERMISSION FROM FLEISCHMANGARCIA.

I CERTIFY TO THE BEST OF MY KNOWLEDGE THAT THESE DRAWINGS COMPLY W/ ALL RELEVANT BUILDING CODES

FGA PROJECT NUMBER
18015

ISSUE DATE
11/07/18

SHEET NUMBER
E5.2

11-12-18 Benito Verzosa d:\2018\18-051-FL New Tampa Rec Center Electrical\CAD\Electrical\18-051-FL New Tampa Rec Center - Electrical.dwg

EXISTING PANELBOARD MDP SCHEDULE

VOLTAGE: 208Y/120V PHASE: 3Φ WIRE: 4W AIC RATING: 65,000 (ETR)
BUS RATING: 1200A MCB 1200A (NOTE 1) NEUTRAL SIZE: 100%
LOCATION: MAIN ELECTRICAL ROOM 125 MOUNTING: SURFACE ISO. GROUND: N SPD Y

KEYNOTE	NOTE	TYPE	LOAD	DESCRIPTION	BRANCH C/B	BRANCH P	CIRCUIT #	CIRCUIT Φ	CIRCUIT #	BRANCH C/B	BRANCH P	DESCRIPTION	LOAD	TYPE	NOTE	KEYNOTE
				SPACE		3	1	A	2	70	3	CHILLED WATER PUMP P-1	3867			2, 9
							3	B	4			(NEW CHILLER YARD)	3867			
							5	C	6				3867			
9, 2			17667	AHU-1 (UNIT HEATER)	200	3	7	A	8	70	3	CHILLED WATER PUMP P-2	3867			2, 9
			17667	(EXISTING MECHANICAL PLATFORM)			9	B	10			(NEW CHILLER YARD)	3867			
			17667				11	C	12				3867			
9, 2			22373	CHILLER CH-1	300	3	13	A	14	150	3	PANEL "D" - SKATE PARK (ETR)	9968		2	
			22373	(NEW CHILLER YARD)			15	B	16				9968			
			22373				17	C	18				9968			
9, 2			22373	CHILLER CH-2	300	3	19	A	20	20	2	SITE LIGHTING (ETR)	450		2	
			22373	(NEW CHILLER YARD)			21	B	22			SITE LIGHTING (ETR)	450			
			22373				23	C	24	20	2	SITE LIGHTING (ETR)	700		2	
	2		700	SITE LIGHTING (ETR)	20	2	25	A	26			SITE LIGHTING (ETR)	700			
			700	SITE LIGHTING (ETR)			27	B	28	20	2	SITE LIGHTING (ETR)	700		2	
	2		950	SITE LIGHTING (ETR)	20	2	29	C	30			SITE LIGHTING (ETR)	700			
			950	SITE LIGHTING (ETR)			31	A	32	60	3	RTU-2 (ETR)	5100		2	
	2		700	SITE LIGHTING (ETR)	20	2	33	B	34				5100			
			700	SITE LIGHTING (ETR)			35	C	36				5100			
	2		200	SPD (TVSS) (ETR)	20	3	37	A	38	175	3	RTU-3 (ETR)	14787		2	
			200				39	B	40				14787			
			200				41	C	42				14787			
	2		5100	RTU-1 (ETR)	60	3	43	A	44	225	3	PANEL "A" (ETR)	15002		2	
			5100				45	B	46				13770			
			5100				47	C	48				14174			
8			35891	PANEL "E"	600	3	49	A	50	225	3	PANEL "B" (ETR)	13197		2	
			31240				51	B	52				13186			
			31242				53	C	54				12523			
10				MAIN CIRCUIT BREAKER (NEW)	1200	3	55	A	56	225	3	PANEL "C" (ETR)	14883		3	
							57	B	58				16981			
							59	C	60				10797			

NOTE:
SEE BUILDING DEMAND LOAD SUMMARY ON SHEET E6.1 FOR DETAILS.

NOTES: 1 EXISTING SQUARE D I-LINE DISTRIBUTION PANELBOARD.
2 (ETR) - INDICATES EXISTING TO REMAIN.
3 EXISTING PANEL "C" TO REMAIN. SEE PANEL SCHEDULE, THIS SHEET, FOR NEW MODIFICATIONS.

NEW PANELBOARD E SCHEDULE (1)

VOLTAGE: 208Y/120V PHASE: 3Φ WIRE: 4W AIC RATING: 22,000 (NOTE 4)
BUS RATING: 600A MLO 600A (NOTE 1) NEUTRAL SIZE: 100%
LOCATION: ELECTRICAL SPACE @ MECH. PLATFORM MOUNTING: SURFACE ISO. GROUND: N SPD Y

NOTE	TYPE	LOAD	DESCRIPTION	BRANCH C/B	BRANCH P	CIRCUIT #	CIRCUIT Φ	CIRCUIT #	BRANCH C/B	BRANCH P	DESCRIPTION	LOAD	TYPE	NOTE	KEYNOTE
			SPACE		1	1	A	2	400	3	PANEL "F"	30055			7
			SPACE		1	3	B	4			(MECHANICAL PLATFORM)	30055			
			SPACE		1	5	C	6				29170			
3	L	451	LIGHTING-CORRIDORS 128 & 129	20	1	7	A	8	30	3	SPD	200	E		
3	L	361	LTG - MULTI-PURPOSE RM 140	20	1	9	B	10				200	E		
3	L	423	LTG - MULTI-PURPOSE RM 141	20	1	11	C	12				200	E		
3	L	1454	LIGHTING - PRESCHOOL GYM 137	20	1	13	A	14	20	1	RECEPT - RM 128,140	1080	R		
3	L	824	LIGHTING - TRAINING BOX 130	20	1	15	B	16	20	1	RECEPT - RM 140,141,142,143,EXT	1080	R		
3	L	793	LIGHTING - TRAINING BOX 130	20	1	17	C	18	20	1	RECEPT - RM 129,140, 141	1080	R		
3	L	240	LIGHTING - MEZZANINE	20	1	19	A	20	20	1	RECEPT - RM 141,EXTERIOR	1260	R		
3	L	433	LIGHTING - EXTERIOR	20	1	21	B	22	20	1	RECEPT - RM 129,137,138,139	720	R		
3	L	430	LTG & EXIT LTS-RM 127,129,134-139,141,142	20	1	23	C	24	20	1	RECEPT - RM 130,137,EXTERIOR	900	R		
3	E	1000	TELECOM EQUIPT - MEZZANINE 201	20	1	25	A	26	20	1	RECEPT - RM 129,130,135,136,137	1080	R		
3	E	1000	TELECOM EQUIPT - MEZZANINE 201	20	1	27	B	28	20	1	RECEPT - RM 129,137	720	R		
3	E	1000	TELECOM EQUIPT - MEZZANINE 201	20	1	29	C	30	20	1	RECEPT - RM 130,137	1080	R		
3	E	1000	TELECOM EQUIPT - MEZZANINE 201	20	1	31	A	32	20	1	RECEPT - RM 130	1080	R		
3	E	540	DDC CONTROL PANEL - MEZZ. 201	20	1	33	B	34	20	1	EWC - CIRCULATION 129	800	E		
3	E	1080	RECEPTACLES - MEZZANINE 201	20	1	35	C	36	20	1	SPARE				
3	E	540	F.A. POWER SUPPLY - MEZZ. 201	20	1	37	A	38	20	1	SPARE				
	E	720	COMPUTER RECEPT - RM 104	20	1	39	B	40	20	1	SPARE				
	E	720	COMPUTER RECEPT - GYM 105	20	1	41	C	42	20	1	SPARE				
	E	720	COMPUTER RECEPT - GYM 105	20	1	43	A	44		1	SPACE				
			SPARE	20	1	45	B	46		1	SPACE				
			SPARE	20	1	47	C	48		1	SPACE				

	TYPE	CONNECTED LOAD (VA)	NEC DEMAND FACTOR	NEC DEMAND LOAD (VA)
R	RECEPTACLES≤10KVA	10000	1.00	10000
	RECEPTACLES>10KVA	80	0.50	40
L	LIGHTING	5410	1.25	6763
M	LARGEST MOTOR	-6305	1.25	1576
	MOTORS	29175	1.00	29175
H	HEATING	55005	1.25	68756
E	EQUIPMENT	14820	1.00	14820
K	KITCHEN EQUIPMENT	-	1.00	-
	TOTAL	114490		131130

PHASE A LOAD =	38725	VA
PHASE B LOAD =	35818	VA
PHASE C LOAD =	35220	VA

NEC DEMAND LOAD =	364	A
SPARE CAPACITY =	36	A
TOTAL AVAILABLE =	400	A

NOTES: 1 PROVIDE PANELBOARD IN NEMA 1 RATED ENCLOSURE (SQUARE D - TYPE NQOB)
2 PROVIDE HACR TYPE CIRCUIT BREAKER
3 PROVIDE LOCK-ON TYPE CIRCUIT BREAKER
4 SEE POWER RISER DIAGRAM NOTES ON SHEET E6.1 FOR ADDITIONAL INFORMATION

EXISTING PANELBOARD C SCHEDULE

VOLTAGE: 208Y/120V PHASE: 3Φ WIRE: 4W AIC RATING: 10,000 (ETR)
BUS RATING: 225A MLO 225A (NOTE 1) NEUTRAL SIZE: 100%
LOCATION: STORAGE ROOM 106 MOUNTING: SURFACE ISO. GROUND: N SPD N

KEYNOTE	NOTE	TYPE	LOAD	DESCRIPTION	BRANCH C/B	BRANCH P	CIRCUIT #	CIRCUIT Φ	CIRCUIT #	BRANCH C/B	BRANCH P	DESCRIPTION	LOAD	TYPE	NOTE	KEYNOTE
3				SPACE	90	3	1	A	2	20	3	AHU-2 (UNIT HEATER)	1667	H		4, 2
							3	B	4			(EXISTING MEZZANINE)	1667	H		
							5	C	6				1667	H		
2, 5		M	3867	AHU-1 (BLOWER FAN MOTOR)	70	3	7	A	8	25	3	AHU-2 (BLOWER FAN MOTOR)	1321	M		6, 2
		M	3867	(EXISTING MEZZANINE)			9	B	10			(EXISTING MEZZANINE)	1321	M		
		M	3867				11	C	12				1321	M		
	2	E	2300	HAND DRYER - RM 109	25	1	13	A	14	20	1	LIGHTS - RM 106, 107, 108, 109	671	L	2, 3	
	2	E	2300	HAND DRYER - RM 110	25	1	15	B	16	20	1	LIGHTS - RM 110, 111, 112, 113	763	L	2, 3	
	2	E	2300	HAND DRYER - RM 111	25	1	17	C	18	20	2	WALL PACK LIGHTS-EXTERIOR WALL	310	L	2, 3	
	2	R	720	RECEPTACLES - RM 105	20	1	19	A	20				310	L		
	2	R	900	RECEPTACLES - RM 106, 108	20	1	21	B	22	30	2	ICE MACHINE - SNACK BAR	2496	E	2	
	2	R	540	RECEPTACLES - RM 107	20	1	23	C	24				2496	E		
	2	R	540	RECEPTACLES - EXTERIOR	20	1	25	A	26	50	2	WATER HEATER - MEZZANINE	4160	E	2	
	2	R	720	FLOORBOX RECEPTACLES - RM 105	20	1	27	B	28				4160	E	2	
2		E	720	DDC CONTROL PANEL-MEZZANINE	20	1	29	C	30	20	1	SUMP PUMP	1176	M	2	
				SPACE		1	31	A	32	20	1	RECEPTACLES - MEZZANINE	540	R	2	
				SPACE		1	33	B	34		1	SPACE				
				SPACE		1	35	C	36		1	SPACE				
				SPACE		1	37	A	38		1	SPACE				
				SPACE		1	39	B	40		1	SPACE				
				SPACE		1	41	C	42		1	SPACE				

	TYPE	CONNECTED LOAD (VA)	NEC DEMAND FACTOR	NEC DEMAND LOAD (VA)
R	RECEPTACLES≤10KVA	3960	1.00	3960
	RECEPTACLES>10KVA	-	0.50	-
L	LIGHTING	2054	1.25	2568
M	LARGEST MOTOR	-11601	0.25	2900
	MOTORS	15564	1.00	15564
H	HEATING	5000	1.25	6250
E	EQUIPMENT	20212	1.00	20212
K	KITCHEN EQUIPMENT	-	1.00	-
	TOTAL	46790		51454

PHASE A LOAD =	16096	VA
PHASE B LOAD =	18194	VA
PHASE C LOAD =	14397	VA

NEC DEMAND LOAD =	143	A
SPARE CAPACITY =	37	A
TOTAL AVAILABLE =	180	A

NOTES: 1 EXISTING PANELBOARD IN NEMA 1 RATED ENCLOSURE (SQUARE D TYPE NQOD)
2 EXISTING CIRCUIT BREAKER TO REMAIN FOR EXISTING LOAD AS SHOWN
3 PROVIDE LOCK-ON TYPE CIRCUIT BREAKER (FIELD VERIFY)

NEW PANELBOARD F SCHEDULE

VOLTAGE: 208Y/120V PHASE: 3Φ WIRE: 4W AIC RATING: 22,000 (NOTE 4)
BUS RATING: 400A MLO 400A (NOTE 1) NEUTRAL SIZE: 100%
LOCATION: ELECTRICAL SPACE @ MECH. PLATFORM MOUNTING: SURFACE ISO. GROUND: N SPD Y

NOTE	TYPE	LOAD	DESCRIPTION	BRANCH C/B	BRANCH P	CIRCUIT #	CIRCUIT Φ	CIRCUIT #	BRANCH C/B	BRANCH P	DESCRIPTION	LOAD	TYPE	NOTE
2	H	4334	AHU-3 (UNIT HEATER)	50	3	1	A	2	30	3	SPD	200	E	2
	H	4334	(MECHANICAL PLATFORM)			3	B	4				200	E	
	H	4334				5	C	6				200	E	
2	M	2102	AHU-3 (BLOWER FAN MOTOR)	40	3	7	A	8	30	3	AHU-6 (UNIT HEATER)	2667	H	2
	M	2102	(MECHANICAL PLATFORM)			9	B	10			(MECHANICAL PLATFORM)	2667	H	
	M	2102				11	C	12				2667	H	
2	H	6000	AHU-4 (UNIT HEATER)	70	3	13	A	14	15	3	AHU-6 (BLOWER FAN MOTOR)	829	M	2
	H	6000	(MECHANICAL PLATFORM)			15	B	16			(MECHANICAL PLATFORM)	829	M	
	H	6000				17	C	18				829	M	
2	M	2102	AHU-4 (BLOWER FAN MOTOR)	40	3	19	A	20	30	3	AHU-7 (UNIT HEATER)	2667	H	2
	M	2102	(MECHANICAL PLATFORM)			21	B	22			(MECHANICAL PLATFORM)	2667	H	
	M	2102				23	C	24				2667	H	
2	H	2667	AHU-5 (UNIT HEATER)	30	3	25	A	26	15	3	AHU-7 (BLOWER FAN MOTOR)	829	M	2
	H	2667	(MECHANICAL PLATFORM)			27	B	28			(MECHANICAL PLATFORM)	829	M	
	H	2667				29	C	30				829	M	
2	M	829	AHU-5 (BLOWER FAN MOTOR)	15	3	31	A	32	30	2	WATER HEATER	2250	E	2, 3
	M	829	(MECHANICAL PLATFORM)			33	B	34			(MECHANICAL PLATFORM)	2250	E	
	M	829				35	C	36	20	2	BAF (CEILING FAN)	1144	M	5
5	M	1435	OVERHEAD DOOR	30	2	37	A	38			(TRAINING BOX 130)	1144	M	
	M	1435	(TRAINING BOX 130)			39	B	40	20	2	BAF (CEILING FAN)	1144	M	5
5	M	1656	ELECTRIC WINCH - ROOM 130	30	1	41	C	42			(PRESCHOOL GYM 137)	1144	M	

	TYPE	CONNECTED LOAD (VA)	NEC DEMAND FACTOR	NEC DEMAND LOAD (VA)
R	RECEPTACLES≤10KVA	-	1.00	-
	RECEPTACLES>10KVA	-	0.50	-
L	LIGHTING	-	1.25	-
M	LARGEST MOTOR	-6305	0.25	1576
	MOTORS	29176	1.00	29176
H	HEATING	55005	1.25	68756
E	EQUIPMENT	5100	1.00	5100
K	KITCHEN EQUIPMENT	-	1.00	-
	TOTAL	89281		104608

PHASE A LOAD =	30055	VA
PHASE B LOAD =	30055	VA
PHASE C LOAD =	29170	VA

NEC DEMAND LOAD =	291	A
SPARE CAPACITY =	29	A
TOTAL AVAILABLE =	320	A

NOTES: 1 NEW PANELBOARD IN NEMA 1 RATED ENCLOSURE (SQUARE D - NQOB).
2 HACR TYPE CIRCUIT BREAKER.
3 PROVIDE LOCK-ON TYPE CIRCUIT BREAKER.
4 SEE POWER RISER DIAGRAM NOTES ON SHEET E6.1 FOR ADDITIONAL INFORMATION.
5 FIELD VERIFY THE NAMEPLATE RATING. ADJUST CIRCUIT BREAKER SIZE AND BRANCH CIRCUIT WIRING SIZE AS REQUIRED. PROVIDE COMPLETE POWER AND CONTROL WIRING INSTALLATIONS PER FINAL APPROVED SHOP DRAWINGS SUBMITTALS.

GENERAL NOTES

A. ALL EXISTING PANELBOARDS TO REMAIN. SEE EXISTING PANELBOARD SCHEDULES, THIS SHEET, FOR NEW WORK.

B. (ETR) - INDICATES EXISTING TO REMAIN. FIELD VERIFY EXACT RATING.

C. SEE CONDUCTOR AND CONDUIT SCHEDULE, THIS SHEET, FOR ADDITIONAL INFORMATION.

D. IT IS THE RESPONSIBILITY OF THE ELECTRICAL CONTRACTOR TO DETERMINE THE EXACT ROUTING AND EXACT LENGTH OF HOMERUN FEEDER AND HOMERUN BRANCH CIRCUITS WIRING. IF THE HOMERUN FEEDER AND BRANCH CIRCUITS WIRING EXCEEDED 75 FEET, THE ELECTRICAL CONTRACTOR SHALL ADJUST CONDUCTORS AND CONDUIT SIZES AS REQUIRED TO ACCOMMODATE VOLTAGE DROP (2% MAX. FOR ALL FEEDERS AND 3% MAX. FOR ALL BRANCH CIRCUITS PER 2017, 6TH EDITION, FLORIDA BUILDING CODE ENERGY CONSERVATION SECTIONS 505.7.3.1 AND 505.7.3.2 RESPECTIVELY).

E. ELECTRICAL CONTRACTOR SHALL FIELD VERIFY FOR THE EXACT NAMEPLATE RATING OF EACH OF THE MECHANICAL AND PLUMBING EQUIPMENT, INCLUDING ALL OWNER FURNISHED EQUIPMENT AND DEVICES PRIOR TO COMMENCING ANY WORK. ADJUST CIRCUIT BREAKER SIZE AND HOMERUN BRANCH CIRCUIT WIRING SIZE IF NEEDED. NOTIFY OWNER REPRESENTATIVE IMMEDIATELY FOR ANY CONFLICT OR DISCREPANCIES.

F. IT IS THE RESPONSIBILITY OF THE ELECTRICAL CONTRACTOR TO FIELD VERIFY THE CURRENT EXISTING CONDITIONS AND LAYOUTS. EC SHALL VISIT ALL EXISTING PANELBOARDS, DEVICES, ETC., INCLUDING ALL ASSOCIATED ITEMS WHICH ARE AFFECTED BY THIS NEW DEMOLITION AND RENOVATION WORK TO ENSURE THAT ALL ITEMS ARE IN GOOD WORKING CONDITION. EC SHALL TRACE ALL EXISTING AFFECTED HOMERUN BRANCH CIRCUIT WIRING BACK TO THE SOURCE.. EC SHALL CONTACT THE GC IMMEDIATELY FOR ANY DISCREPANCIES.

(X) PANELBOARDS KEYNOTES

1. PROVIDE NEW PANELBOARD. SEE POWER RISER DIAGRAM ON SHEET E6.1 FOR ADDITIONAL INFORMATION.

2. PROVIDE NEW CIRCUIT BREAKER FOR NEW LOAD AS SHOWN. MAKE, TYPE AND AIC RATING OF NEW CIRCUIT BREAKER SHALL MATCH THE EXISTING CIRCUIT BREAKER. SUBMIT A COMPLETE SHOP DRAWINGS SUBMITTALS.

3. EXISTING 90A,3P CIRCUIT BREAKER TO REMAIN TEMPORARILY FOR EXISTING AHU-1. NOTE: EXISTING AHU-1 SHALL BE REMOVED AFTER THE NEW AHU-1 HAS BEEN INSTALLED COMPLETELY. EC SHALL COORDINATE WITH GC FOR THE EXACT DATE OF DEMOLITION WORK. PROVIDE NEW LABEL AS "SPACE". REMOVE EXISTING BRANCH CIRCUIT WIRING AS REQUIRED.

4. EXISTING 90A,3P CIRCUIT BREAKER TO REMAIN TEMPORARILY FOR EXISTING AHU-2. NOTE: EXISTING AHU-2 SHALL BE REMOVED AFTER THE NEW AHU-2 HAS BEEN INSTALLED COMPLETELY. EC SHALL COORDINATE WITH GC FOR THE EXACT DATE OF DEMOLITION WORK. PROVIDE NEW CIRCUIT BREAKER AS SHOWN. REMOVE EXISTING BRANCH CIRCUIT WIRING AND PROVIDE NEW HOMERUN BRANCH CIRCUIT WIRING AS REQUIRED.

5. EXISTING 80A,3P CIRCUIT BREAKER TO REMAIN TEMPORARILY FOR EXISTING CU-1. NOTE: EXISTING CU-1 SHALL BE REMOVED AFTER THE NEW CHILLERS HAVE BEEN INSTALLED COMPLETELY. EC SHALL COORDINATE WITH GC FOR THE EXACT DATE OF DEMOLITION WORK. PROVIDE NEW CIRCUIT BREAKER AS SHOWN. REMOVE EXISTING BRANCH CIRCUIT WIRING AND PROVIDE NEW HOMERUN BRANCH CIRCUIT WIRING AS REQUIRED

6. SAME AS KEYNOTE #5 ABOVE EXCEPT, FOR EXISTING CU-2.

7. MOUNT CIRCUIT BREAKER AT THE TOP AND LABEL CIRCUITS 2,4,6 AS "SPACE".

8. EXISTING CIRCUIT BREAKER (SIZE AS SHOWN) TO REMAIN FOR NEW PANELBOARD AS INDICATED. SEE PANEL "E" SCHEDULE, THIS SHEET, FOR DETAILS. CLEAN, REFURBISH AND TEST EXISTING CIRCUIT BREAKER AS NEEDED.

9. PROVIDE NEW FEEDER. SEE EQUIPMENT CONNECTION SCHEDULE ON SHEET E5.2 FOR ELECTRICAL REQUIREMENTS. THE EXACT ROUTING AND LENGTH OF FEEDERS SHALL BE DETERMINED BY EC IN THE FIELD, ADJUST FEEDERS SIZES AS REQUIRED TO ACCOMMODATE VOLTAGE DROP.

10. REMOVE EXISTING 1200A MCB (80% RATED) AND PROVIDE WITH NEW 1200A MCB (100% RATED). MAKE, TYPE AND AIC RATING OF NEW 100% RATED MCB SHALL MATCH EXISTING MCB. FIELD VERIFY THE CURRENT RATING OF THE EXISTING 1200A MCB PRIOR TO REMOVAL AND REPLACEMENT.

ELECTRICAL SCHEDULES AND NOTES A1 NTS

genesis engineering group, llc.
2601 Cattleman Rd, Suite 501
sarasota, fl 34232
project #18-051
coa #29304
www.geneng.net

FleischmanGarcia
ARCHITECTURE • PLANNING • INTERIOR DESIGN
SAFETY HARBOR OFFICE 195 FOURTH AVENUE NORTH SAFETY HARBOR, FLORIDA 34695 PHONE (727) 725-8880 FAX (727) 725-3900
TAMPA OFFICE 324 HYDE PARK AVENUE, SUITE 300 TAMPA, FLORIDA 33606 PHONE (813) 251-4400 FAX (813) 251-1994
SARASOTA OFFICE 5967 CATTLEMEN LANE, SUITE 6 SARASOTA, FLORIDA 34232 PHONE (941) 342-9293 FAX (941) 342-9253
REGISTRATION NUMBER AA C000123

NEW TAMPA RECREATION CENTER ADDITION
TAMPA, FL 33647

THIS DESIGN AND DRAWING IS THE SOLE PROPERTY OF FLEISCHMANGARCIA. NO PART OF THIS WORK MAY BE REPRODUCED WITHOUT PRIOR WRITTEN PERMISSION FROM FLEISCHMANGARCIA.

I CERTIFY TO THE BEST OF MY KNOWLEDGE THAT THESE DRAWINGS COMPLY W/ ALL RELEVANT BUILDING CODES

FGA PROJECT NUMBER 18015

ISSUE DATE 11/07/18

SHEET NUMBER E5.3

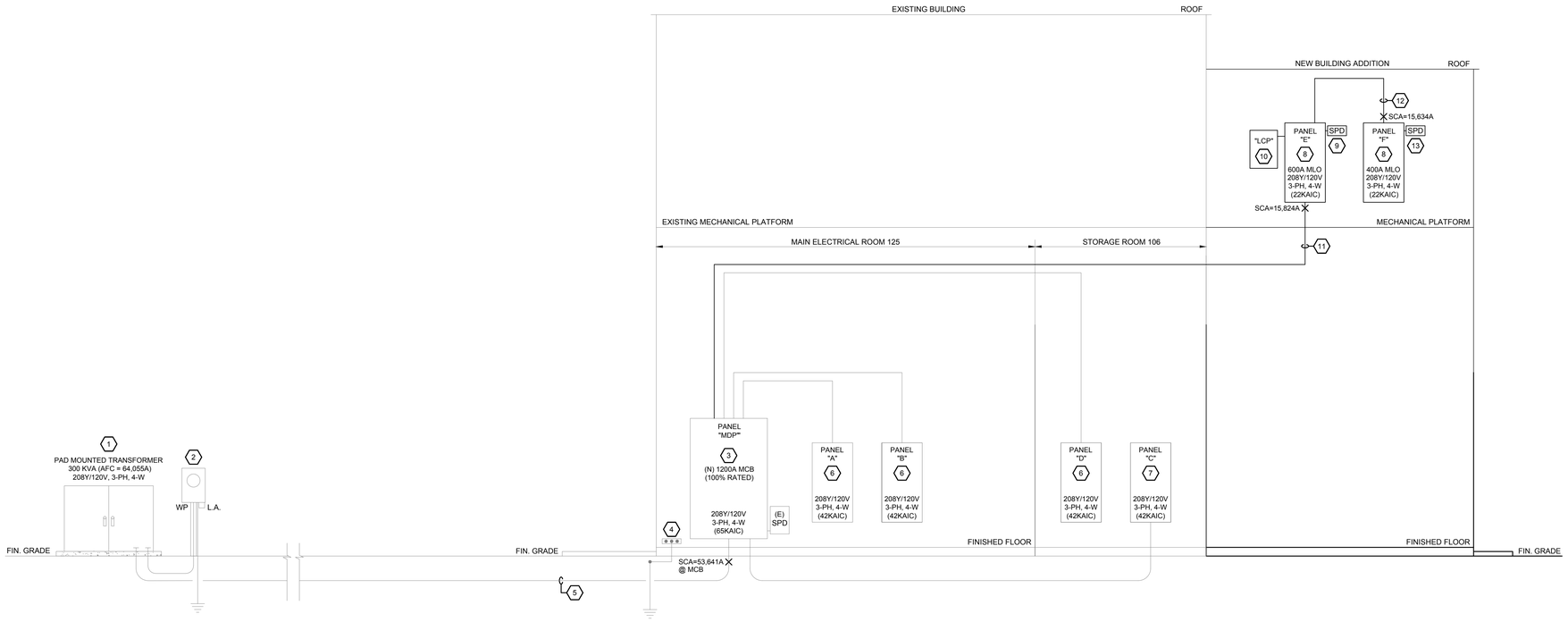

1 ELECTRICAL POWER RISER DIAGRAM
NTS

POWER RISER DIAGRAM GENERAL NOTES

A. ALL CONDUCTORS SHALL BE COPPER INCLUDING EQUIPMENT GROUNDING CONDUCTORS.

B. AS PART OF FINAL AND COMPLETE ELECTRICAL EQUIPMENT AND DEVICES SHOP DRAWINGS SUBMITTALS PROCESS, THE ELECTRICAL CONTRACTOR SHALL OBTAIN SERVICES OF A REGISTERED PROFESSIONAL ELECTRICAL ENGINEER WITH A MINIMUM OF 3 YEARS OF CURRENT EXPERIENCE IN THE COORDINATION OF ELECTRICAL POWER SYSTEMS TO PERFORM A SHORT CIRCUIT FAULT CURRENT STUDY AND OVERCURRENT PROTECTION COORDINATION STUDY INCLUDING THE ACTUAL DATA ON THE SPECIFIC OF THE EXISTING UTILITY PAD MOUNTED TRANSFORMER AND NEW EQUIPMENT AND DEVICES THAT WILL BE USED ON THIS PROJECT. FOR SYSTEM INSTALLER: CALIBRATION, TESTING, ADJUSTMENT, AND PLACING INTO SERVICE OF THE PROTECTIVE DEVICES SHALL BE ACCOMPLISHED BY A MANUFACTURER'S PRODUCT FIELD SERVICE ENGINEER OR INDEPENDENT TESTING COMPANY WITH A MINIMUM OF TWO YEARS OF CURRENT PRODUCT EXPERIENCE IN PROTECTIVE DEVICES. SEE ITEMS C, D, E AND F BELOW FOR ADDITIONAL REQUIREMENTS.

C. COORDINATION STUDY: BEFORE CONSTRUCTION BEGINS FOR THIS PROJECT THAT CONTAIN ADJUSTABLE TRIP SETTINGS FOR CIRCUIT BREAKERS, THE ELECTRICAL CONTRACTOR SHALL ACCOMPLISH A TIME-CURRENT COORDINATION STUDY TO BE ABLE TO PROPERLY SET THE SETTINGS ON THE BREAKER TRIP UNITS. THE STUDY NEEDS TO BE BASED ON THE ACTUAL EQUIPMENT THAT WILL BE SUPPLIED ON THIS PROJECT. INCLUDE IN THE STUDY ALL SPECIFICATION CUT SHEETS ON THE ELECTRICAL EQUIPMENT, BREAKERS, AND TRIP UNITS BEING FURNISHED ON THIS PROJECT. THE STUDY AND THE EQUIPMENT CUT SHEETS SHALL BE PROVIDED IN A SINGLE THREE-RING BINDER.

D. BOTH THE SHORT CIRCUIT STUDY AND THE TIME CURRENT COORDINATION STUDY SHALL BE PERFORMED BY THE SAME COMPANY, EITHER CONSULTING ENGINEERING SERVICES WITH THE EQUIPMENT AND DEVICES MANUFACTURER OR AN INDEPENDENT REGISTERED PROFESSIONAL ENGINEER REGULARLY ENGAGED IN PERFORMING THESE STUDIES. SPECIFY ALL EQUIPMENT MATERIAL SUBMITTALS TO BE PROVIDED WITH THE STUDY IN A SINGLE THREE-RING BINDER.

E. ARC FLASH: THE ARCH FLASH ANALYSIS WILL DETERMINE THE INCIDENT ENERGY POTENTIAL OF EACH PIECE OF ELECTRICAL DISTRIBUTION EQUIPMENT IN THIS FACILITY. BEFORE CONSTRUCTION AND CONCURRENTLY WITH THE SHORT CIRCUIT AND COORDINATION STUDY, THE CONTRACTOR SHALL PERFORM AN ARC FLASH ANALYSIS ON THE SPECIFIC EQUIPMENT BEING INSTALLED WITH THE ADJUSTABLE SETTINGS RECOMMENDED.

F. AVAILABLE FAULT CURRENT LABELING: IN LIEU OF THE MAXIMUM AVAILABLE FAULT CURRENT MARKING AS REQUIRED BY 2014 NEC 110.24, A PERMANENTLY AFFIXED LABEL SHALL BE PROVIDED WITH THE AVAILABLE FAULT CURRENT AT THE TIME OF INSTALLATION AND CALCULATION. THE LABEL SHALL BE 2" X 3" IN SIZE AND SHALL BE BLUE LETTERING ON A CONTRASTING BACKGROUND. THE LABEL SHALL ALSO INCLUDE THE DATE OF THE SHORT CIRCUIT FAULT CURRENT CALCULATION.

BUILDING DEMAND LOAD SUMMARY

EXISTING BUILDING PEAK DEMAND LOAD READING PER TECO ENERGY POWER COMPANY:
(MAXIMUM PEAK KW DEMAND LOAD FOR THE LAST 12 MONTHS) ..... 135.00 KW

LOAD DESCRIPTION	CONNECTED KW	DEMAND KW
1. EXISTING MAIN DISTRIBUTION PANEL "MDP" (MODIFICATIONS) :		
EXISTING CONNECTED LOAD IS APPROXIMATE & CURRENT DEMAND LOAD IS THE MAX. PEAK READING (ABOVE), INCLUDING 125% DF FOR LIGHTING LOAD)	223.38	135.00
ADDED NEW CHILLER CH-1 = 67.12 KW @ 100% DF	67.12	67.12
ADDED NEW CHILLER CH-2 = 67.12 KW @ 100% DF	67.12	67.12
ADDED NEW CHILLED WATER PUMP P-1 = 10 HP = 11.60 KW @ 100% DF	11.60	11.60
ADDED NEW CHILLED WATER PUMP P-2 = 10 HP = 11.60 KW @ 100% DF	11.60	11.60
ADDED NEW AHU-1 = 53.00 KW @ 100% DF	53.00	53.00
2. EXISTING PANEL "C" (MODIFICATIONS):		
REMOVED EXISTING HEATING LOAD (AHU-1 AND AHU-2)	- 51.88	- 51.88
REMOVED EXISTING COOLING LOAD (CU-1 AND CU-2)	- 46.12	00.00
ADDED NEW AHU-1 BLOWER FAN LOAD = 10 HP = 11.60 KW @ 100%	11.60	11.60
ADDED NEW AHU-2 HEATING LOAD = 5 KW @ 100%	5.00	5.00
ADDED NEW AHU-2 BLOWER FAN LOAD = 3 HP = 3.96 KW @ 100%	3.96	3.96
3. NEW PANEL "E" AND PANEL "F" (ADDITIONAL LOADS) :		
GENERAL LIGHTING = 5.41 KW AT 125% DF	5.41	6.76
RECEPTACLES = 10.08 KW (1ST 10 KW @ 100% DF, REMAINING # 50% DF)	10.00	10.40
HEATING = 55.01 @ 100% DF	55.01	55.01
EQUIPMENT = 14.82 KW @ 100% DF	14.82	14.82
MOTOR = 29.18 KW @ 100% DF	29.18	29.18
LARGEST MOTOR = 6.31 KW @ 25% DF	0.00	1.58
TOTAL =	470.80	431.87

431.87 KVA @ 208Y/120V, 3-PHASE, 4-WIRE = 1,199 AMPS

ENERGY CODE COMPLIANCE STATEMENT:
ELECTRICAL DESIGN CONFORMS WITH THE REQUIREMENTS OF THE CURRENT ASHRAE 90.1 - 2010 LIGHTING POWER DENSITIES:

NEW BUILDING ADDITION (INTERIOR):
TOTAL AREA = 7,528 SQUARE FEET (GYMNASIUM/FITNESS CENTER)
LIGHTING CONNECTED LOAD = 5,410 WATTS

(5,410 WATTS / 7,528 SQUARE FEET = 0.719 WATTS PER SQUARE FOOT) - CODE ALLOWS 0.72 WATTS PER SQUARE FOOT PER ASHRAE 90.1 - 2010 LIGHTING POWER DENSITIES.

(X) POWER RISER DIAGRAM KEYNOTES

1. EXISTING TECO ENERGY POWER COMPANY PAD MOUNTED TRANSFORMER. ANY NEW MODIFICATION SHALL BE BY POWER COMPANY. ELECTRICAL CONTRACTOR SHALL COORDINATE WITH TECO PROJECT ENGINEER AT THE PROJECT SITE PRIOR TO START OF CONSTRUCTION. NOTE: IF TECO INCREASES THE TRANSFORMER SIZE, THE NEXT LARGER TRANSFORMER WILL BE 500 KVA, 208Y/120V, 3-PHASE, 4-WIRE AND THE SHORT CIRCUIT FAULT CURRENT WILL BE 69,393 AMPS. CONTACT TECO ONE SOURCE @ (813) 635-1500 FOR SERVICE ORDER.
2. EXISTING C.T. METER TO REMAIN INCLUDING ALL ASSOCIATED ITEMS.
3. EXISTING MAIN DISTRIBUTION PANEL "MDP". SEE PANEL SCHEDULE MDP ON SHEET E5.3 FOR NEW WORK MODIFICATIONS AND ADDITIONAL INFORMATION.
4. EXISTING MAIN GROUNDING BUSBAR (MGB) TO REMAIN. FIELD VERIFY ALL GROUNDING AND BONDING CONNECTIONS. TIGHTEN ALL CONNECTIONS AND PROVIDE TESTING AS NEEDED.
5. REMOVE EXISTING UNDERGROUND SE FEEDER CONDUCTORS AND REPLACE WITH NEW NEW (4) - SETS OF 4-500 KCMIL THWN/THHN CU IN EACH EXISTING 3 1/2" C. NOTIFY OWNER REPRESENTATIVE IMMEDIATELY FOR ANY DISCREPANCIES.
6. EXISTING BRANCH PANELBOARD AS INDICATED TO REMAIN, INCLUDING ALL ASSOCIATED ITEMS.
7. EXISTING BRANCH PANELBOARD AS INDICATED TO REMAIN, INCLUDING ALL ASSOCIATED ITEMS. SEE PANEL SCHEDULE "C" FOR NEW MODIFICATIONS AND ADDITIONAL INFORMATION.
8. NEW BRANCH PANELBOARD AS INDICATED. SEE PANELBOARD SCHEDULE ON SHEET E5.3 FOR DETAILS.
9. BRANCH PANELBOARD SPD (POC200), TYPE 2 SPD, 208Y/120V, 3-PHASE, 5-WIRE, 200KAIC (UL 1449-3RD EDITION), NON-MODULAR SURGE PROTECTIVE DEVICE, 100kA SURGE CURRENT RATING (L-N & L-G), STATUS INDICATIONS PER PHASE, DRY CONTACTS, PANEL-SIDE MOUNT KIT, ETC. INSTALL PER MANUFACTURER INSTRUCTIONS. SPD SHALL HAVE A TEN (10) YEAR REPLACEMENT WARRANTY.
10. PROGRAMMABLE LIGHTING CONTROL PANEL (LCP) IN NEMA-1 ENCLOSURE WITH LOCKABLE DOOR. SEE LCP SCHEDULE ON SHEET E4.1 FOR ADDITIONAL INFORMATION.
11. FEEDER: (2) - SETS OF 4-400 KCMIL THWN/THHN CU, 1 #2/0 EGC THWN/THHN CU IN EACH 3" C. THE EXACT ROUTING AND LENGTH OF FEEDERS SHALL BE DETERMINED BY EC IN THE FIELD, ADJUST FEEDERS SIZES AS REQUIRED TO ACCOMMODATE VOLTAGE DROP.
12. FEEDER: 4-500 KCMIL THWN/THHN CU, 1 #3 EGC THWN/THHN CU IN EACH 3 1/2" C.
13. BRANCH PANELBOARD SPD (PQC100), TYPE 2 SPD, 208Y/120V, 3-PHASE, 5-WIRE, 200KAIC (UL 1449-3RD EDITION), NON-MODULAR SURGE PROTECTIVE DEVICE, 100kA SURGE CURRENT RATING (L-N & L-G), STATUS INDICATIONS PER PHASE, DRY CONTACTS, PANEL-SIDE MOUNT KIT, ETC. INSTALL PER MANUFACTURER INSTRUCTIONS. SPD SHALL HAVE A TEN (10) YEAR REPLACEMENT WARRANTY.

ELECTRICAL POWER RISER DIAGRAM
A1
NTS

genesis engineering group, llc.
2801 Cattleman Rd., Suite 501
sarasota, fl 34232
project #19-051
genesis
www.genengi.net
cos #29304

FleischmanGarcia.
ARCHITECTURE • PLANNING • INTERIOR DESIGN
SAFETY HARBOR OFFICE
195 FOURTH AVENUE NORTH
SAFETY HARBOR, FLORIDA 34695
PHONE (727) 725-8880
FAX (727) 725-9086
TAMPA OFFICE
324 HYDE PARK AVENUE, SUITE 300
TAMPA, FLORIDA 33606
PHONE (813) 251-4400
FAX (813) 251-3666
SARASOTA OFFICE
5967 CATTLEMEN LANE, SUITE 6
SARASOTA, FLORIDA 34232
PHONE (941) 342-9292
FAX (941) 342-9293
REGISTRATION NUMBER AA C000123

NEW TAMPA RECREATION CENTER ADDITION
TAMPA, FL 33647

THIS DRAWING AND DRAWING IS THE SOLE PROPERTY OF FLEISCHMAN/GARCIA, INC. AND MAY NOT BE REPRODUCED WITHOUT PRIOR WRITTEN PERMISSION FROM FLEISCHMAN/GARCIA.

I CERTIFY TO THE BEST OF MY KNOWLEDGE THAT THESE DRAWINGS COMPLY WITH ALL RELEVANT BUILDING CODES

FGA PROJECT NUMBER
18015

ISSUE DATE
11/07/18

SHEET NUMBER
E6.1

Bento Vazquez M:\2018\18-051-FL New Tampa Rec Center Electrical\CAD\Electrical\18-051-FL New Tampa Rec Center - Electrical.dwg
11-12-18

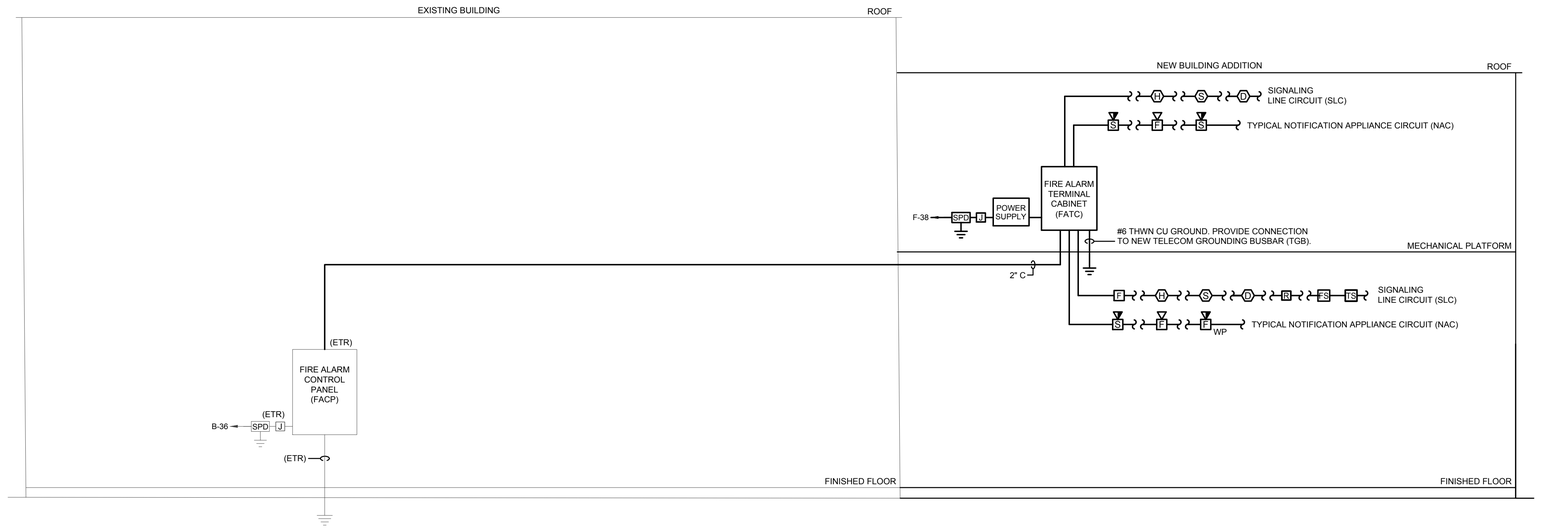

NOTE: NOT ALL DEVICES ARE SHOWN, SEE FLOOR PLANS ON SHEET E2.1 FOR QUANTITY AND LOCATION. ALSO, SEE FINAL APPROVED MECHANICAL AND FIRE PROTECTION SYSTEM DRAWINGS FOR EXACT LOCATION OF DUCT SMOKE DETECTORS, TAMPER SWITCHES, FLOW SWITCHES, ETC.

1 PARTIAL ADDRESSABLE FIRE ALARM SYSTEM RISER DIAGRAM
NTS

FIRE ALARM SYSTEM GENERAL NOTES

1. THIS BUILDING FACILITY HAS AN EXISTING ADDRESSABLE VOICE-EVAC FIRE ALARM SYSTEM THAT COMPLIES WITH NFPA 72, NFPA 70 ARTICLE 760, NFPA 101, 2017 6TH EDITION FLORIDA FIRE PREVENTION CODE AND LOCAL AHJ.
2. THE FIRE ALARM SYSTEM CONTRACTOR SHALL VISIT THE PROJECT SITE TO DETERMINE THE EXISTING CONDITION AND SATISFY THEMSELVES AS TO THE NATURE AND SCOPE OF WORK.
3. THE SELECTED FIRE ALARM SYSTEM CONTRACTOR IS EXPECTED TO BE FAMILIAR WITH THE ACCEPTED PRACTICES OF LOCAL AHJ AND SHALL INCLUDE ALL EQUIPMENT, DEVICES, MATERIALS AND LABOR TO MEET ALL APPLICABLE CODES AND LOCAL AHJ REQUIREMENTS AND SPECIFICATIONS.
4. THE FIRE ALARM SYSTEM SHALL BE PREPARED BY A DELEGATED FIRE ALARM SYSTEM CONTRACTOR (NICET LEVEL 4 TECHNICAL TRAINING). IT IS THE SOLE RESPONSIBILITY OF THE FIRE ALARM SYSTEM CONTRACTOR TO PROVIDE A COMPLETE SET OF SHOP DRAWINGS SUBMITTALS REFLECTING A FULLY-FUNCTIONAL, CODE-COMPLIANT INSTALLATION.
5. THE FIRE ALARM SYSTEM SHOP DRAWINGS (1/8" SCALE PLANS) SHALL INCLUDE ALL EQUIPMENT, DEVICES, COMPONENTS, BATTERY CALCULATIONS, SEQUENCE OF OPERATIONS, POINT TO POINT WIRING, WIRING LEGEND, FA RISER DIAGRAM WITH ZONE LABELS, GENERAL NOTES AND KEYNOTES, ETC. INCLUDING COMPLETE EQUIPMENT, DEVICES, ETC. CUT SHEETS AND ALL RELATED DOCUMENTS.
6. ALL FIRE ALARM SYSTEM EQUIPMENT, DEVICES, COMPONENTS, ETC. SHALL MATCH THE MAKE, TYPE AND SHALL BE COMPATIBLE WITH THE EXISTING FA SYSTEM EQUIPMENT AND DEVICES. ALL FIRE ALARM SYSTEM WIRING SHALL BE INSTALLED IN METALLIC CONDUIT AND SHALL MATCH THE EXISTING WIRING (FIELD VERIFY). ALL NOTIFICATION CIRCUITS SHALL BE SUPERVISED FOR INTEGRITY. PROVIDE APPROVED WIRING CONNECTION TO THE EXISTING EQUIPMENT AND DEVICES AS REQUIRED FOR THIS NEW MODIFICATIONS / EXPANSION.
7. COMPLETE FIRE ALARM SYSTEM SHOP DRAWINGS SHALL BE PROVIDED FOR APPROVAL BEFORE INSTALLATION OF FA SYSTEM STARTS. THESE DRAWINGS MUST BE STAMPED / APPROVED BY A PERSON WITH A NICET LEVEL 4 TECHNICAL TRAINING.
8. NEW DUCT SMOKE DETECTORS SHALL BE THE SAME MANUFACTURER AS THE EXISTING FIRE ALARM CONTROL PANEL, AND FED FROM THE 24 VOLT DC FIRE ALARM CONTROL PANEL, NOT FROM THE HVAC CONTROLS. LOCATE THE DUCT SMOKE DETECTOR DOWNSTREAM OF THE AIR FILTERS AND UPSTREAM OF ANY BRANCH DUCTS. PROVIDE REMOTE TEST SWITCHES FOR EACH DUCT SMOKE DETECTOR.
9. DUCT SMOKE DETECTOR SHALL INTERFACE WITH THE AHU IT IS SERVING AND AUTOMATICALLY SHUT DOWN THAT AHU (ONLY). IF THE DISTANCE FROM THE DUCT SMOKE DETECTOR TO THE INTERFACE (CONTROL UNIT, STARTER, DDC CONTROLLER, ETC.) IS MORE THAN 3 FEET, PROVIDE AN ADDRESSABLE RELAY MODULE WITHIN 3 FEET OF THE INTERFACE.
10. PROVIDE SURGE PROTECTION DEVICES (SPD) AND REQUIRED PROTECTIVE FEATURES.
11. THE FIRE ALARM SYSTEM CONTRACTOR SHALL BE AN AUTHORIZED REPRESENTATIVE AND DISTRIBUTOR OF THE EXISTING FIRE ALARM SYSTEM MANUFACTURER. THE INSTALLING CONTRACTOR SHALL PROVIDE A FACTORY TRAINED AUTHORIZED REPRESENTATIVE OF THE MANUFACTURER WITH A NICET LEVEL 4 TECHNICAL TRAINING FOR THE PROJECT. THIS INDIVIDUAL SHALL SUPERVISE THE INSTALLATION OF THE SYSTEM.
12. THE FACTORY TRAINED AUTHORIZED REPRESENTATIVE OF THE MANUFACTURER OR A NICET LEVEL 4 FIRE ALARM TECHNICIAN SHALL CERTIFY THE SYSTEM IN ACCORDANCE WITH THE DESIGN, SPECIFICATIONS, SHOP DRAWINGS, AND NFPA 72. THIS INDIVIDUAL MUST BE PRESENT AT ALL INSPECTIONS AND TESTING OF THE SYSTEM.
13. THIS RISER IS DIAGRAMATIC AND DOES NOT REFLECT THE ENTIRE SYSTEM. REFER TO FINAL APPROVED FIRE ALARM SYSTEM SHOP DRAWINGS SUBMITTALS FOR EXACT REQUIREMENTS, SPECIFICATIONS AND ADDITIONAL INFORMATION.
14. PROVIDE ADDITIONAL NOTIFICATION POWER SUPPLIES AS REQUIRED TO POWER AUDIO/VISUAL DEVICES.
15. MOUNT FIRE ALARM TERMINAL CABINET AT 72" AFF TO THE TOP OF ENCLOSURE.
16. MOUNT MANUAL PULL STATIONS AT 48" TO TOP OF DEVICE AS REQUIRED BY CODE. PROVIDE APPROVED TRANSPARENT COVER TO MATCH EXISTING COVER.
17. SMOKE DETECTORS SHALL NOT BE MOUNTED ANY CLOSER THAN 3'-0" FROM ANY HVAC AIR DIFFUSER.
18. MOUNT NOTIFICATION DEVICE AT 80" AFF FROM THE BOTTOM OF THE LENS, UNLESS OTHERWISE NOTED AND SHOWN ON ELECTRICAL PLANS.
19. THE FIRE ALARM CONTROL PANEL SHALL NOT BE USED TO POWER ANY UNAUTHORIZED DEVICE.
20. FIELD VERIFY THE EXACT LOCATION OF ALL DEVICES PRIOR TO ROUGH-IN.
21. IDENTIFY ALL FIRE ALARM IONIZATION DETECTORS WITH ZONE/ADDRESS & POINT NUMBER.
22. ALL AUDIBLE AND STROBE SIGNAL DEVICES SHALL BE SUPERVISED.
23. THE CEILING MOUNTED DETECTORS SHALL NOT BE CLOSER THAN 24 INCHES FROM ANY VERTICAL OBSTRUCTION (BEAM, COLUMN, AIR CONDITIONER DUCT ETC.).
24. OUTLET BOXES FOR DETECTORS IN CEILINGS SHALL BE MOUNTED FLUSH. BOXES IN LAY-IN CEILING SHALL BE SUPPORTED FROM TEE BAR HANGERS.
25. LOCATE DEVICES TO AVOID ANY CONFLICT WITH HVAC DUCTS.
26. PANEL SHALL INCORPORATE REQUIRED MODULES FOR FAN, AND AIR HANDLER SHUTDOWN. LABEL 'FAN DISCONNECT'.
27. EACH AND ALL ITEMS OF THE FIRE ALARM SYSTEM SHALL BE LISTED AS A PRODUCT OF A SINGLE FIRE ALARM SYSTEM MANUFACTURER UNDER THE APPROPRIATE CATEGORY BY THE 'U.L.' LABEL. ALL CONTROL EQUIPMENT IS TO BE LISTED UNDER UL CATEGORY UOJZ AS A SINGLE CONTROL UNIT. PARTIAL LISTING SHALL NOT BE ACCEPTABLE.
28. IN ADDITION TO THE UL-UOJZ REQUIREMENT MENTIONED ABOVE, THE SYSTEM CONTROLS SHALL BE UL LISTED FOR POWER LIMITED APPLICATIONS PER NEC 760. ALL CIRCUITS MUST BE MARKED IN ACCORDANCE WITH NEC ARTICLE 760-23.
29. THE SYSTEM SHALL BE INSTALLED AND INSPECTED BY A CERTIFIED INSTALLER AND SHALL BE FUNCTIONALLY TESTED IN THE PRESENCE OF THE OWNER AND THE FIRE MARSHAL. (ADVISE ENGINEER OF RECORD).
30. UNLESS OTHERWISE NOTED, ALL WIRING SHALL BE NO. 14 AWG COPPER, UON AND SUITABLE FOR USE WITH POWER LIMITED CIRCUITS. ALL FIRE ALARM CONDUCTORS TO BE RUN IN CONDUIT (MINIMUM 3/4 INCH) SPOT PAINT ALL FIRE ALARM CONDUIT AND JUNTION BOXES "RED". CONDUIT SHALL BE IDENTIFIED TO WITHIN 6 INCHES OF THE BOX OR ENCLOSURE.
31. CONTRACTOR SHALL FIELD COORDINATE WITH SECURITY SYSTEM SUPPLIER/INSTALLER AND OWNER REQUIREMENTS TO PROVIDE OVERRIDE FOR DOOR SECURITY SYTEM. (DOORS TO UNLOCK UPON ACTIVATION OF BUILDING FIRE ALARM SYSTEM) CONTRACTOR TO FURNISH ALL RELAYS AND WIRING AS REQUIRED FOR OVERRIDE.
32. UPON ACTIVATION OF ANY ALARM INITIATING DEVICE (MANUAL STATION OR SMOKE DETECTOR) THE FOLLOWING SHALL OCCUR.
    1. ALL HORNS SHALL SOUND.
    2. VISUAL STROBES SHALL FLASH AND BE SYNCHRONIZED.
    3. FAN SHUT DOWN RELAYS SHALL BE DENERGIZED AND SHALL INTERRUPT CONTROL POWER TO FAN POWERED BOXES AND/OR AIR HANDLING UNITS.
    4. AN AUTOMATIC SIGNAL SHALL BE SENT TO A U.L. APPROVED CENTRAL MONITORING STATION.
    5. SECURITY SYSTEM OVERRIDE TO RELEASE ALL LOCKED DOORS.
33. SYSTEMS SETUP AND PROGRAMMING SHALL COMPLY WITH LOCAL AHJ AND BUILDING FACILITY STANDARD REQUIREMENTS AND SPECIFICATIONS. NOTE: CONTRACTOR TO MODIFY EXISTING FA SYSTEM PROGRAMMING AS NEEDED TO ACCOMMODATE THE NEW FA SYSTEM EXPANSION AS SHOWN.
34. PROVIDE APPROVED TESTING OF THE ENTIRE FIRE ALARM SYSTEM IN THIS BUILDINGS FACILITY PER LOCAL AHJ REQUIREMENTS AND SPECIFICATIONS.

FAC 61G15-32.008 COMPLIANCE NOTES FOR FIRE ALARM SYSTEM
THE FIRE ALARM SYSTEM LAYOUT IS INTENDED TO CONVEY DESIGN INTENT OF THE ENGINEER OF RECORD IN ACCORDANCE WITH FLORIDA ADMINISTRATIVE CODE 61G15-32.008. THE DESIGN OF THE FIRE ALARM SYSTEM SHALL BE SUBMITTED BY THE FIRE ALARM SYSTEM CONTRACTOR FOR PERMIT AND FIRE MARSHAL APPROVAL. CONTRACTOR SHALL PREPARE AND SUBMIT FIRE ALARM DRAWINGS AND ALL CALCULATIONS REQUIRED IN ACCORDANCE WITH NFPA 72, PREVAILING CODES AND FAC 61G15-32.008.

FIRE ALARM SYSTEM RISER DIAGRAM AND NOTES

A1
NTS

genesis engineering group, llc.
2801 Cattleman Rd., Suite 501
sarasota, fl 34232
project #19-051
genesis
www.genengi.net
cos #23304

FleischmanGarcia
ARCHITECTURE • PLANNING • INTERIOR DESIGN
SAFETY • MARKETING • TECHNOLOGY
195 FOURTH AVENUE NORTH
NAPLES, FLORIDA 34102-5895
PHONE (727) 724-8880
FAX (727) 725-3066
324 HYDE PARK AVENUE, SUITE 300
TAMPA, FLORIDA 33606
PHONE (813) 251-4400
FAX (813) 251-4500
5967 CATTLEMEN CANE, SUITE 6
SARASOTA, FLORIDA 34232
PHONE (941) 342-5252
FAX (941) 342-5253
REGISTRATION NUMBER AA C000123

NEW TAMPA RECREATION CENTER ADDITION

TAMPA, FL 33647

THIS SIGNAL AND DRAWING IS THE SOLE PROPERTY OF FLEISCHMAN/GARCIA, NO REPRODUCTION MAY BE MADE OR BE REPRODUCED WITHOUT PRIOR WRITTEN PERMISSION FROM FLEISCHMAN/GARCIA

I CERTIFY TO THE BEST OF MY KNOWLEDGE THAT THESE DRAWINGS COMPLY WITH ALL RELEVANT BUILDING CODES

FGA PROJECT NUMBER
18015

ISSUE DATE
11/07/18

SHEET NUMBER
E6.2

Benito Vorzos\M:\2018\18-051-FL New Tampa Rec Center Electrical\CAD\Electrical\18-051-FL New Tampa Rec Center - Electrical.dwg
11-12-18

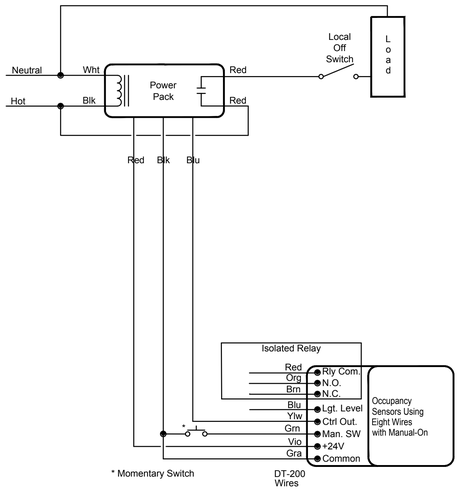

Note.
The Manual ON feature via a momentary switch is optional. Refer to the installation instruction for additional information.

DT-305 Occupancy Sensor with Manual-On Standard Schematic

DT-305 OS DT

CEILING MOUNTED DUAL TECHNOLOGY OCCUPANCY SENSOR (MAXIMUM 1000 SQ FT PER SENSOR. REQUIRES BZ-200 POWER PACK)

1 CEILING MOUNTED OCCUPANCY SENSOR
NOT TO SCALE

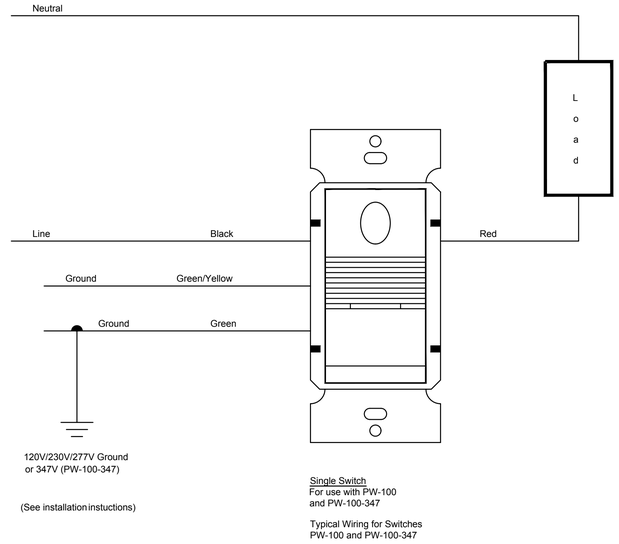

PW-101-W OS DT WALL MOUNTED OCCUPANCY SENSOR - DUAL TECHNOLOGY

3 WALL MOUNTED OCCUPANCY SENSOR
NOT TO SCALE

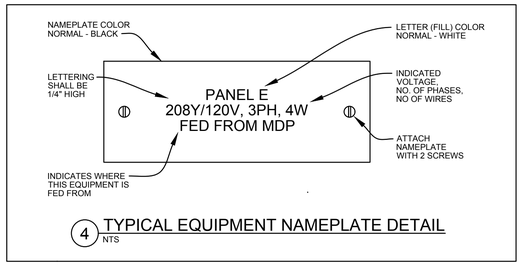

4 TYPICAL EQUIPMENT NAMEPLATE DETAIL
NTS

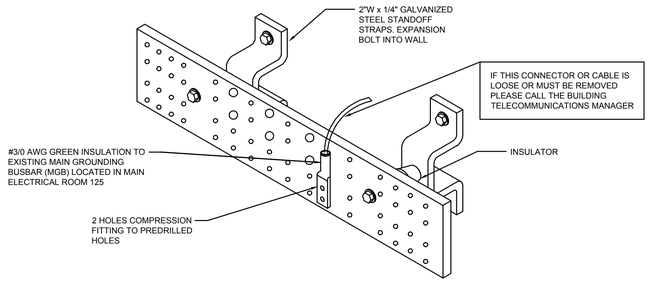

NOTES:
1. GROUND BUSBAR SHALL BE A MINIMUM 5 INCH X 1/4 INCH COPPER BAR AT LEAST ONE (1) FEET IN LENGTH.
2. PROVIDE LENGTH SUFFICIENT FOR ALL INDICATED TERMINATIONS AND 20% SPARE MOUNTING SPACE. CONNECTIONS SHALL UTILIZE TWO HOLE COMPRESSIONS CONNECTOR.
3. GROUND BUSBAR SHALL BE MOUNTED MINIMUM 2" OFF WALL AND 12" AFF.
4. PROVIDE APPROVED FIBERGLASS INSULATORS PER BUILDING STANDARD.
5. PROVIDE APPROVED LABEL ON EACH GROUND CONDUCTOR.
6. GROUND BUSBAR SHALL BE READILY ACCESSIBLE IN THE DESIGNATED DATA TELECOM ROOM SPACE.
7. ALL GROUND CONDUCTORS SHALL BE ROUTED EITHER IN PVC CONDUIT OR IN AIR TO THE GROUND BUSBAR. PROVIDE PVC CONDUIT TO PROTECT CONDUCTOR IF NEEDED.
8. COMPRESSION TYPE CONNECTORS FOR CONDUCTORS SHALL BE USED WITH DOUBLE-HOLE LUGS. BOTH BOLTS FOR THE DOUBLE LUGS SHALL BE BOLTED AND TORQUED TO THE BUSBAR.
9. PROVIDE LAMINATED PLATES TO IDENTIFY THE PARTICULAR SYSTEM OR ITEM BONDED BY THE WIRE OR TAGS CONNECTED TO THE WIRE ITSELF.
10. PROVIDE GROUND RATED BELLEVILLE WASHERS BETWEEN BUSBAR AND CONNECTOR. PROVIDE CONDUCTIVE GREASE BETWEEN BUSBAR AND CONNECTIONS. PROVIDE FULL WRAP STRAP CONNECTORS. CLAMPING OF THE STRAPS SHALL BE WITH FULL SURFACE CLAMPING TOOL TO INSURE EVEN COMPRESSION AROUND THE CABLE.
11. PROVIDE 12 SETS OF TWO-HOLE PREDRILLED AND TAPPED HOLES FOR CONNECTION OF GROUNDING WIRE TERMINATION DEVICE.
12. PROVIDE #3/0 THWN COPPER WIRE IN 3/4" C TO BUILDING MAIN GROUNDING BUSBAR (MGB) LOCATED IN EXISTING MAIN ELECTRICAL ROOM 125 VIA EXISTING TELECOM MAIN GROUNDING BUSBAR (TMGB).
13. PROVIDE APPROVED GROUNDING/BONDING CONNECTION FROM NEW TGB TO NEW DATA CABINET OR RACK WITH #4 THWN/THHN COPPER.
14. PROVIDE APPROVED GROUNDING/BONDING CONNECTION FROM NEW TGB TO EACH NEW LV SYSTEMS EQUIPMENT, DEVICES, ETC. LOCATED AT MECHANICAL PLATFORM WITH #6 THWN/THHN COPPER.
15. TELECOMM GROUNDING BUSBAR (TGB) MUST BE UL LISTED.

5 TELECOM GROUNDING BUSBAR (TGB) DETAIL
NTS

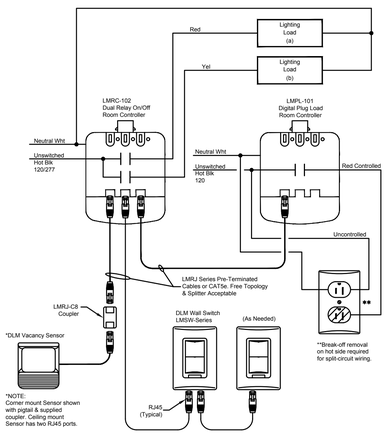

LMRC-102 & LMPL-101
Wiring Diagram

DEVICES ARE PRESET FOR PLUG n' GO™ OPERATION, ADJUSTMENT IS OPTIONAL.
Sequence of Operation: In this configuration The LMRC-102 defaults to multi-level automatic-on/automatic off. Load (a) turns on automatically and load (b) defaults to manual-on control; both loads turn automatically off. The LMPL-101 defaults to automatic-on/automatic off. Maximum of 4 room controllers, controlling up to 8 loads and up to 24 communicating devices per DLM local network. For full operational details, adjustments and more features of the product, see the DLM System Installation Guide at www.wattstopper.com

2 SINGLE CIRCUIT NON DIMMING LIGHTING/RECEPTACLE LOAD CONTROL
NOT TO SCALE

ELECTRICAL DETAILS

A1
NTS

genesis engineering group, llc.
2601 Cattleman Rd., Suite 501
sarasota, fl 34232
project #19-051
genesis
www.genengi.net
cos #23304

FleischmanGarcia.
ARCHITECTURE • PLANNING • INTERIOR DESIGN
SAFETY • MARKETING • TECHNOLOGY
595 FOURTH AVENUE NORTH
ST. PETERSBURG, FLORIDA 33705
PHONE (727) 824-8880
FAX (727) 725-9000
MANATEE OFFICE
3967 CATTLEMEN LANE, SUITE 6
SARASOTA, FLORIDA 34232
PHONE (941) 342-9293
FAX (941) 342-9253
324 HYDE PARK AVENUE, SUITE 300
TAMPA, FLORIDA 33606
PHONE (813) 251-4400
FAX (813) 251-1846
REGISTRATION NUMBER AA C000123

NEW TAMPA RECREATION CENTER ADDITION
TAMPA, FL 33647

THE DESIGN AND DRAWING IS THE SOLE PROPERTY OF FLEISCHMAN/GARCIA, NO PART OF THIS DRAWING MAY BE REPRODUCED WITHOUT PRIOR WRITTEN PERMISSION FROM FLEISCHMAN/GARCIA.

I CERTIFY TO THE BEST OF MY KNOWLEDGE THAT THESE DRAWINGS COMPLY W/ ALL RELEVANT BUILDING CODES

FGA PROJECT NUMBER
18015

ISSUE DATE
11/07/18

SHEET NUMBER
E7.1

Bento Verzosa\K:\2018\18-051-FL New Tampa Rec Center Electrical\CAD\Electrical\18-051-FL New Tampa Rec Center - Electrical.dwg
11-12-18

System No. CAJ1044
(Formerly Sytem No. 319)
F Ratings-2,3, and 4 Hr (See Items 2A and 4)
T Rating-0 Hr
L Ratring At Ambient-2 CFM/sq ft
L Rating At 400 F-less than 1 CFM/sq ft

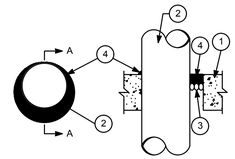

SECTION A-A

1. FLoor or Wall Assembly-Lightweight or normal weight (100-150 pcf) concrete. Except as noted in table under Item 4, min. thickness of solid concrete floor wall may also be constructed of any min 6 in. thick UL Classified hollow-core Precast Concrete Units*. When floor is constructed of hollow-core precast concrete units, packing material (Item 3) and caulk fill material (Item 4) to be installed symetrically on both sides of floor, flush with floor surface. Wall assembly is 4 1/2 in. Floor assembly may also be constructed of any UL Classified Concrete Blocks*. Max dia of opening is 32 in. See Concrete BLocks (CAZT) and Precast Concrete Units (CFTV) categories in the Fire Resistance Directory for names of manufacturers.

1A. Steel Sleeve-(Optionals, not shown)-Max 15 in. ID (or smaller) Schedule 10 (or heavier) steel sleeve cast or grouted into floor or wall assembly. Sleeve may extend a max of 2 in. above top of floor or or beyond either surface of wall. Max 16 in. ID (or smaller) min 0.028 wall thickness (or heavier) galvanized steel sleeve cast or grouted into floor or wall assembly. Sleeve may extend a max of 1/2 in. beyond either surface of floor or wall.

2. Through Penetrants-One metallic pipe, conduit or tubing to be installed either concentrically or eccentrically within the firestop system. Max annular space between pipe, conduit or tubing and edge of through opening or sleeve is dependent on the parametes shown in Item 4. Min annular space between pipe or conduit and edge of through opening is zero in. (point contact). Pipe conduit or tubing to be rigidly supported on both sides of floor or wall assembly.
   The following types and sizes of metallic pipes, conduits or tubing may be used;
   A. Steel Pipe-Nom 30 in. diam (or smaller) Schedule 10 (or heavier) steel pipe.
   B. Iron Pipe-Nom 30 in. diam (or smaller) cast or ductile iron pipe.
   C. Conduit-Nom 6 in. diam (or smaller) rigid steel conduit.
   D. Conduit-Nom 4 in. diam (or smaller) steel electrical metallic tubing.
   E. Copper Tubing-Nom 6 in. diam (or smaller) Type L (or heavier) copper tube.
   F. Copper Pipe-Nom 6 in. diam (or smaller) Regular (or heavier) copper pipe.

3. Packing Material-Polyethylene backer rod or nom 1 in. thickness of tightly-packed mineral wool batt or glass fiber insulation firmly packed into opening as a permanent form. Packing material to be recessed from top surface of floor or from both surfaces of wall as required to accomodate the required thickness of caulk fill material (Item 4).

4. Fill, Void or Cavity Material*-Caulk-Applied to fill the annualar space flush with top surface of floor. In wall assemblies, required caulk thickness to be installed symmetrically on both sides of wall, flush with wall surface. The hourly F ratings and the min required caulk thicknesses are dependent upon a number of parameters, as shown in the following table:

Min Floor or Wall Thnkns, In	Nom Pipe Tube or Conduit Diam, In	Max Annular Space, In	Min Caulk Tnkns, In	F Rating, Hr
2-1/2	1/2-12	1-3/8	1/2	2
2-1/2	1/2-12	3-1/4	1	2
4-1/2	1/2-6	1-3/8	1/4(a)	2
4-1/2	1/2-12	1-1/4	1/2	3
4-1/2	1/2-20	2	1	3
4-1/2	1/2-20	2	1	3
4-1/2	1/2-12	3-1/4	1	3
5-1/2	1/2-6	1-3/8	1(b)	4

(a)Min 2 in thickness of mineral-wool batt insulation required in annular space.
(b)Min 1 in. thickness of mineral-wool batt insulation required in annular space on both sides of floor or wall assembly. Min 1 in. thickness of caulk to be installed flush with each surface of floor or wall assembly.

Minnesota Mining & Manufacturing Co.-CP 25WB+.
*Bearing the UL Classification Marking

1 CONCRETE CONDUIT PENETRATION DETAIL
NOT TO SCALE

System No. WL1001
(Formerly Sytem No. 147)
F Ratings-1,2,3 and 4 Hr (See Items 2 and 3)
T Rating-0,1,2,3, and 4 Hr (See Item 3)
L Ratring At Ambient-less than 1 cfm/SQ. FT.
L Rating At 400 F-less than 1 CFM/sq ft

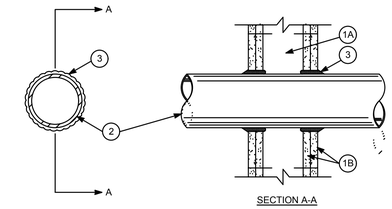

SECTION A-A

1. Wall Assembly-The 1,2,3 or 4 hr fire-rated gypsum wallboard/stud wall assembly shall be constructed of the materials and in the manner described in the individual U300 or U400 Series Wall or Partition Designs in the UL Fire Resistance Directory and shall include the following construction features:
   A. Studs-Wall framing may consist of either wood studs (max 2 h fire rated assemblies) or steel channel studs. Wood studs consist of nom 2 by 4 in. lumber spaced 16 in. OC with nom 2 by 4 in. lumber end plates and cross braces. Steel studs to be min 3-5/8 in. wide by 1-3/8 in. deep channels spaced max 24 in. OC.
   B. Wallboard, Gypsum*-Nom 1/2 or 5/8 in. thick, 4 ft. wide with square or tapered edges. The gypsum wallboard type, thickness, number of layers, fastener type and sheet orientation shall be as specified in the individual U300 or U400 Series Design in the UL Fire Resistance Directory. Max diam of opening is 13-1/2 in.
2. Pipe or Conduit-Nom 12 in. diam (or smaller) Schedule 10 (or heavier) steel pipe, nom 12 in. diam (or smaller) service weight (or heavier) cast iron soil pipe, nom 12 in. diam (or smaller) Class 50 (or heavier) ductile irom pressure pipe, nom 6 in. diam (or smaller) steel conduit, nom 4 in. diam (or smaller) steel electrical metallic tubing, nom 6 in. diam (or smaller) Type L or (or heavier) copper tubing or nom 1 in. diam (or smaller) flexible steel conduit. When copper pipe is used, max F rating of firestop system (item 3) is 2 h. Steel pipes or conduits larger than nom 4 in. diam may only be used in walls constructed using steel channel studs. A max of one pipe or conduit is permitted in the firestop system. Pipe or conduit to be installed near center of stud cavity width and to be rigidly supported on both sides of wall assembly.
3. Fill, Void or Cavity Material*-Caulk-Caulk fill material installed to completely fill annular space between pipe or conduit and gypsum wallboard and with a min 1/4 diam bead if caulk applied to perimeter of pipe or conduit at its egress from the wall. Caulk installed symmetrically on both sides of wall assembly. The hourly F rating of the firestop system is dependent upon the hourly fire rating of the wall assembly in which it is installed, as shown in the following table. The hourly T rating of the firestop system is dependent upon the type or size of the pipe or conduit and the hourly fire rating of the wall assembly in which it is installed, as tabulated below:

2 DRYWALL CONDUIT PENETRATION DETAIL
NOT TO SCALE

ELECTRICAL DETAILS

A1
NTS

genesis engineering group, llc.
2601 Cattleman Rd. Suite 501
sarasota, fl 34232
project #19-6511
genesis
www.genesig.net
cos #23304

FleischmanGarcia
ARCHITECTURE • PLANNING • INTERIOR DESIGN
SAFETY HARBOR OFFICE
1905 FOURTH AVENUE NORTH
SAFETY HARBOR, FLORIDA 34695
PHONE (727) 725-8880
FAX (727) 725-9066
324 HYDE PARK AVENUE, SUITE 300
TAMPA, FLORIDA 33606
PHONE (813) 251-4400
FAX (813) 251-4401
3967 CATTLEMEN LANE, SUITE 6
SARASOTA, FLORIDA 34232
PHONE (941) 342-9293
FAX (941) 342-9253
REGISTRATION NUMBER AA C000123

NEW TAMPA RECREATION CENTER ADDITION

TAMPA, FL 33647

THIS DESIGN AND DRAWING IS THE SOLE PROPERTY OF FLEISCHMAN/GARCIA, INC. AND MAY NOT BE REPRODUCED WITHOUT PRIOR WRITTEN PERMISSION FROM FLEISCHMAN/GARCIA

I CERTIFY TO THE BEST OF MY KNOWLEDGE THAT THESE DRAWINGS COMPLY W/ ALL RELEVANT BUILDING CODES

FGA PROJECT NUMBER
18015

ISSUE DATE
11/07/18

SHEET NUMBER
E7.2

11-12-18 Bento Verzosa\20181918-051-FL New Tampa Rec Center Electrical\CAD\Electrical\18-051-FL New Tampa Rec Center - Electrical.dwg

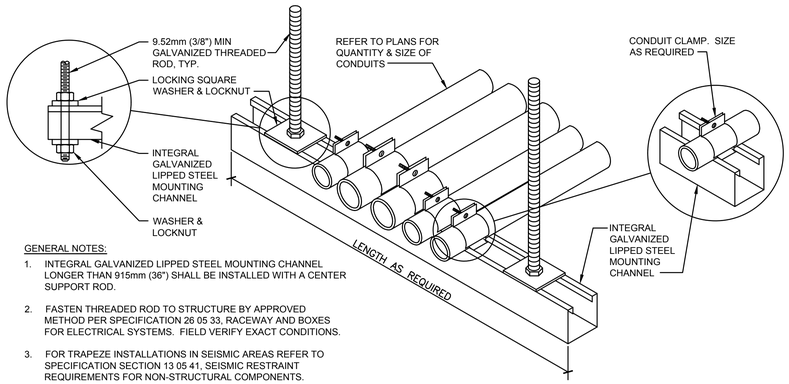

GENERAL NOTES:

1. INTEGRAL GALVANIZED LIPPED STEEL MOUNTING CHANNEL LONGER THAN 915mm (36") SHALL BE INSTALLED WITH A CENTER SUPPORT ROD.
2. FASTEN THREADED ROD TO STRUCTURE BY APPROVED METHOD PER SPECIFICATION 26 05 33, RACEWAY AND BOXES FOR ELECTRICAL SYSTEMS. FIELD VERIFY EXACT CONDITIONS.
3. FOR TRAPEZE INSTALLATIONS IN SEISMIC AREAS REFER TO SPECIFICATION SECTION 13 05 41, SEISMIC RESTRAINT REQUIREMENTS FOR NON-STRUCTURAL COMPONENTS.

1 CONDUIT TRAPEZE MOUNTING DETAIL
NOT TO SCALE

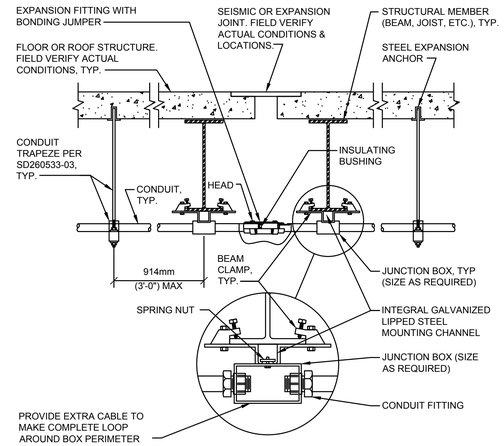

GENERAL NOTE:

1. INSTALLATION IS ACCEPTABLE ALTERNATE TO DETAIL SD260533-01.
2. INSTALLATION IS REQUIRED FOR CONDUIT 76mm (3") AND LARGER.

2 CONDUIT EXPANSION JOINT CROSSING DETAIL - EXPANSION FITTING
NOT TO SCALE

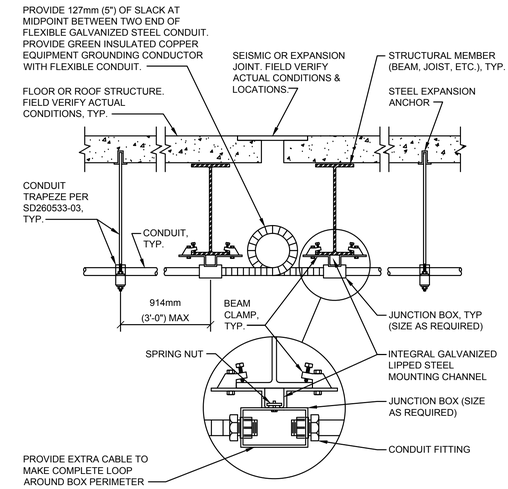

GENERAL NOTE:

1. DETAIL IS APPLICABLE ONLY FOR CONDUIT SMALLER THAN 76mm (3").

3 CONDUIT EXPANSION JOINT CROSSING DETAIL - FLEXIBLE FITTING
NOT TO SCALE

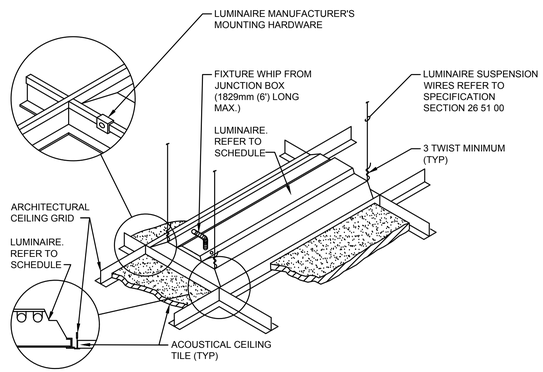

GENERAL NOTE:

1. INSTALL IN ACCORDANCE WITH MANUFACTURER'S MOUNTING INSTRUCTIONS AND USING THE RECOMMENDED MOUNTING HARDWARE.

4 LUMINAIRE MOUNTING DETAIL - LAY-IN CEILING
NOT TO SCALE

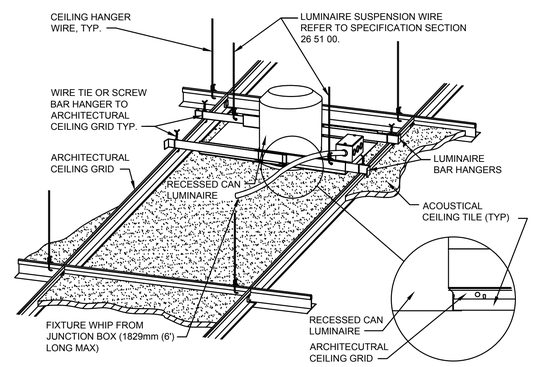

GENERAL NOTE:

1. INSTALL IN ACCORDANCE WITH MANUFACTURER'S MOUNTING INSTRUCTIONS AND USING RECOMMENDED MOUNTING HARDWARE

5 DOWNLIGHT MOUNTING DETAIL - LAY-IN CEILING
NOT TO SCALE

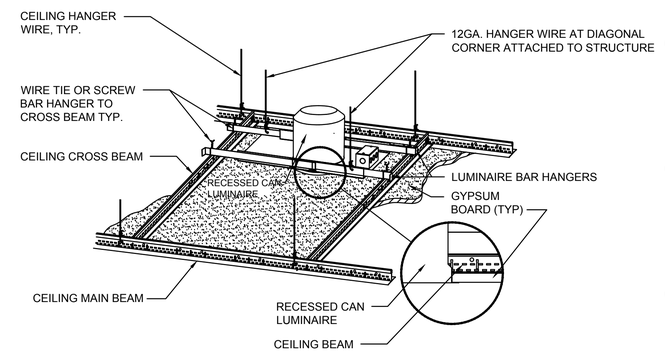

GENERAL NOTE:

1. INSTALL IN ACCORDANCE WITH MANUFACTURER'S MOUNTING INSTRUCTIONS AND USING RECOMMENDED MOUNTING HARDWARE

6 DOWNLIGHT MOUNTING DETAIL - GYPBOARD CEILING
NOT TO SCALE

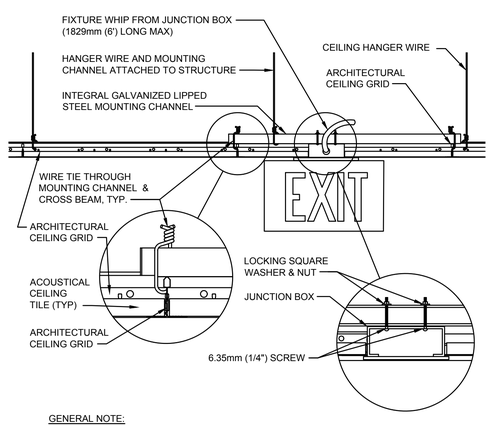

GENERAL NOTE:

1. INSTALL IN ACCORDANCE WITH MANUFACTURER'S MOUNTING INSTRUCTIONS AND USING THE RECOMMENDED MOUNTING HARDWARE.

7 EXIT SIGN MOUNTING - LAY-IN CEILING
NOT TO SCALE

ELECTRICAL DETAILS

A1
NTS

genesis engineering group, llc.
2801 Cattleman Rd., Suite 501
sarasota, fl 34232
project #18-051
genesis
www.genengi.net
cos #23304

FleischmanGarcia
ARCHITECTURE • PLANNING • INTERIOR DESIGN
SAITH PARK OFFICE
195 FOURTH AVENUE NORTH
ST. PETERSBURG, FLORIDA 33705
PHONE (727) 823-8880
FAX (727) 823-8889
324 HYDE PARK AVENUE, SUITE 300
TAMPA, FLORIDA 33606
PHONE (813) 251-4400
FAX (813) 251-4488
REGISTRATION NUMBER AA C000123
5967 CAPE LEMON LANE, SUITE 6
SARASOTA, FLORIDA 34240
PHONE (941) 342-9293
FAX (941) 342-9253

NEW TAMPA RECREATION CENTER ADDITION
TAMPA, FL 33647

THIS DESIGN AND DRAWING IS THE SOLE PROPERTY OF FLEISCHMANGARCIA. NO PART OF THIS WORK MAY BE REPRODUCED WITHOUT PRIOR WRITTEN PERMISSION FROM FLEISCHMANGARCIA.

I CERTIFY TO THE BEST OF MY KNOWLEDGE THAT THESE DRAWINGS COMPLY W/ ALL RELEVANT BUILDING CODES

FGA PROJECT NUMBER
18015

ISSUE DATE
11/07/18

SHEET NUMBER
E7.3

11-12-18 Benito Verzosa\\2018\18-051-FL New Tampa Rec Center Electrical\CAD\Electrical\18-051-FL New Tampa Rec Center - Electrical.dwg