The Enclosed Document Is Provided For Your Convenience.

Please Email ALL Questions:

MailTo:ContractAdministration@TampaGov.net

City of Tampa
Contract Administration Department
306 E. Jackson St. #280A4N
Tampa, FL 33602
(813)274-8456

CITY OF TAMPA

CORDELIA AND GRECO
PUMP STATION REHABILITATION

100% PLANS
CONTRACT NO. 18-C-00042

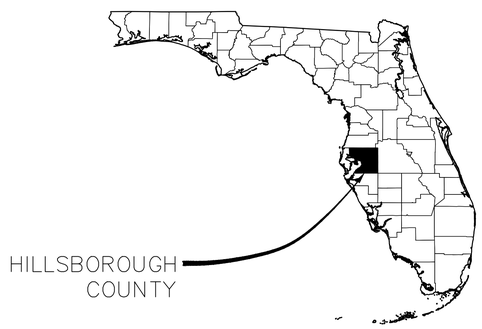

KEY MAP
NOT TO SCALE

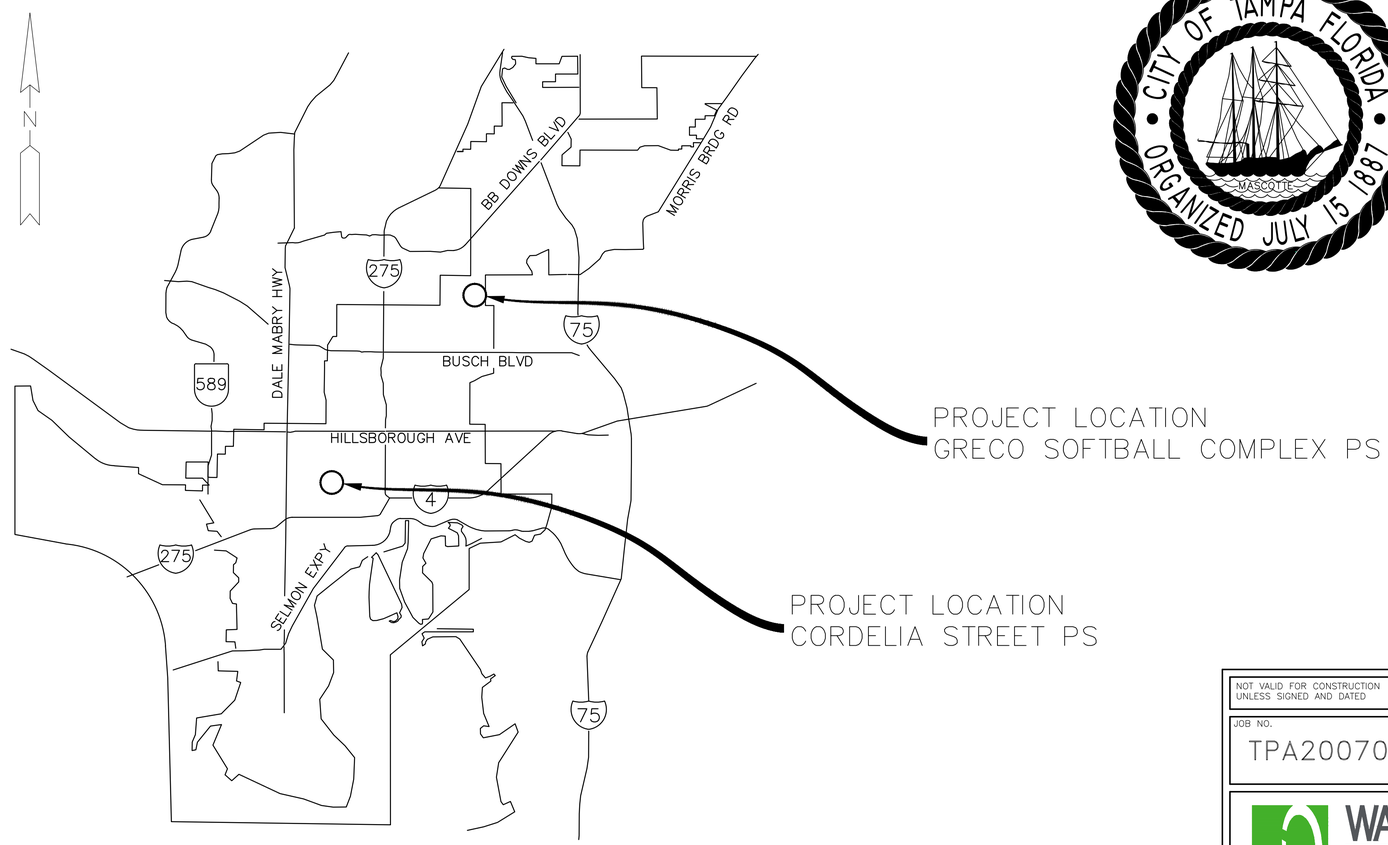

811
Know what's **below.**
Call before you dig.

NOT VALID FOR CONSTRUCTION
UNLESS SIGNED AND DATED

JOB NO.	SHEET
TPA200701M	G-1

WADE TRIM
201 North Franklin Street, Suite 1350
Tampa, FL 33602
813.882.4373
www.wadetrim.com
Certificate of Authorization No.: 3952

PREPARED UNDER THE SUPERVISION OF:

Ricardo G Borromeo, P.E. — 67101 LICENSE NO.

ISSUED FOR:
100% DESIGN 11-20-2018

CITY OF TAMPA MISCELLANEOUS PUMP IMPROVEMENTS

© Wade Trim Group, Inc.

PROJECT MANAGER:JOHN PACIFICI
C:\PW_WORK2\D0861421\GCS-PLTS-COVER.DWG - G-1 - PLOTTED 11/20/2018 3:15 PM BY STARK, THOMAS
FIELD BOOK INFORMATION:-

CITY OF TAMPA

CORDELIA STREET
PUMP STATION REHABILITATION

100% PLANS
CONTRACT NO. 18-C-00042

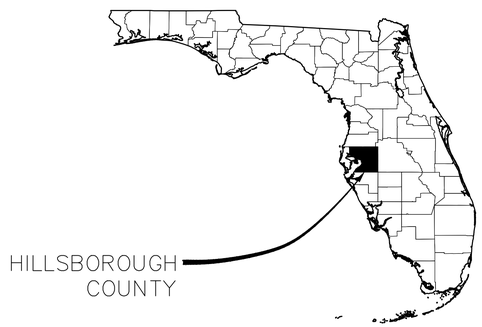

KEY MAP
NOT TO SCALE

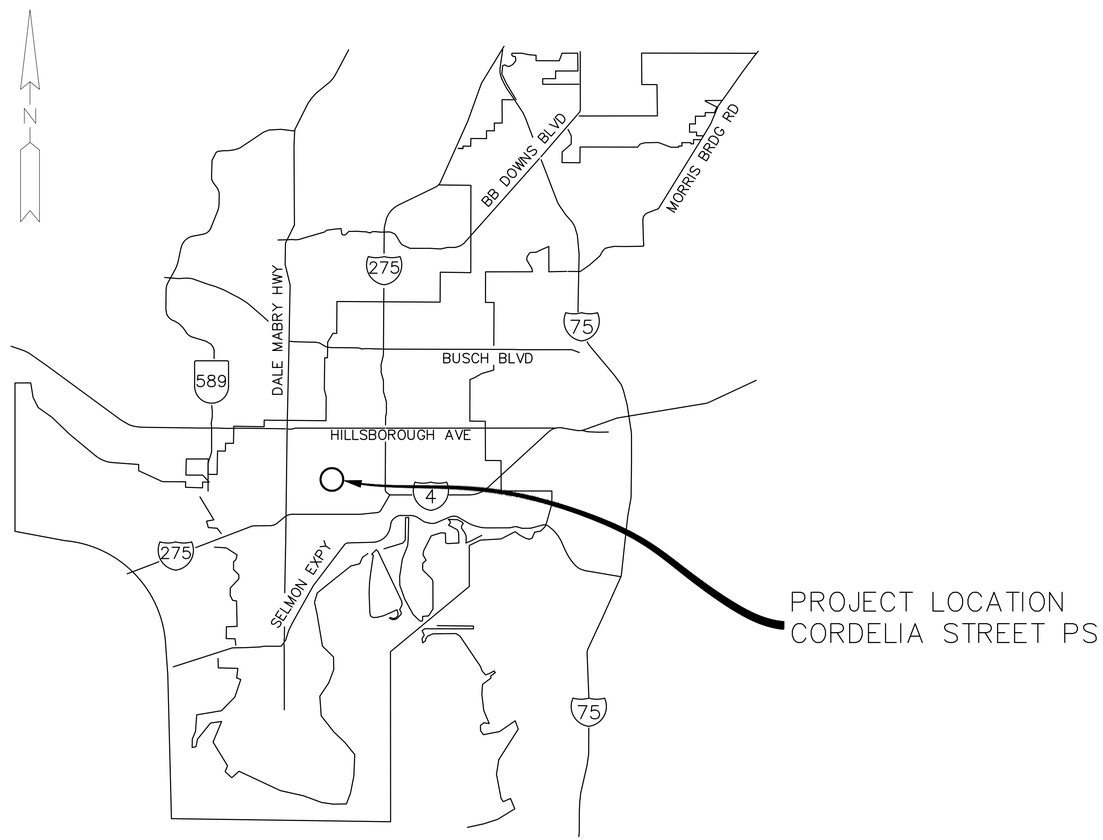

Know what's **below.**
Call before you dig.

NOT VALID FOR CONSTRUCTION
UNLESS SIGNED AND DATED

JOB NO.	SHEET
TPA200701M	G-1

WADE TRIM
201 North Franklin Street, Suite 1350
Tampa, FL 33602
813.882.4373
www.wadetrim.com
Certificate of Authorization No.: 3952

PREPARED UNDER THE SUPERVISION OF:

Ricardo G Borromeo, P.E. — 67101 LICENSE NO.

ISSUED FOR:
100% DESIGN 11-20-2018

PROJECT MANAGER:JOHN PACIFICI
C:\PW_WORK2\D0861421\GCS-PLTS-COVER-CORDELIA.DWG - G-1 CORDELIA - PLOTTED 11/20/2018 2:41 PM BY STARK, THOMAS
FIELD BOOK INFORMATION:-

CITY OF TAMPA MISCELLANEOUS PUMP IMPROVEMENTS

© Wade Trim Group, Inc.

LEGEND

EX SEWERS	UP TO 36" AND SMALLER	36" AND LARGER
EX FORCE MAIN		
EX SAN SEWER & MANHOLES		
EX STORM & SEWER MANHOLES		
PROP SEWERS		
PROP FORCE MAIN		
PROP SANITARY SEWER & MAHOLES		
PROP STORM SEWER & MANHOLES		

OTHER FEATURES

RIGHT OF WAY LINE — R/W
EDGE OF PAVEMENT
WATER LINE
GAS LINE
ELECTRICAL CABLE OR DUCT
TELEPHONE CABLE OR DUCT
TV CABLE
VALVE, AIR RELEASE VALVE
HYDRANT
CATCH BASIN, GRATE
POWER POLE
TELEPHONE POLE
GUY POLE
GUY WIRE
VALVE VAULT — V
WATER METER — M
ELECTRICAL MANHOLE OR VAULT — E
TELEPHONE MANHOLE OR VAULT — T
TRAFFICE BOX OR VAULT — TR
BUILDING LIMIT — 1236
PROPERTY OWNERSHIP
FENCE
CONIFER — 6"
PALM — 8"
OAK — 10"
OTHER — 12"
SHRUB
HEDGE
RAILROAD TRACKS
IRON PIPE
CONTROL POINT
CONCRETE MONUMENT
OPEN DITCHES
EXISTING WYE
PROPOSED WYE
CLEAN OUT — CO

ABBREVIATIONS

AIR RELEASE VALVE	ARV	MAINTENANCE OF TRAFFIC	MOT
APPROXIMATE LOCATION	AL	MANHOLE	MH or M
BENCH MARK	BM	PLUG VALVE	PV
BURIED TELEPHONE	BT	POINT of INTERSECTION	PI
CONCRETE PIPE	CP	POLYVINYL CHLORIDE PIPE	PVC
DIAMETER RATIO	DR	REINFORCED CONCRETE PIPE	RCP
DUCTILE IRON PIPE	DIP	RESTRAINED MECHANICAL JOINT	RMJ
EDGE OF PAVEMENT	EOP	RIGHT of WAY	R/W
FIBER OPTIC CABLE	FOC	TOP of PIPE	TOP
FLORIDA DEPT. OF TRANSPORTATION	FDOT	VERIFIED VERT. AND HORZ. LOCATION	Vvh
FORCE MAIN	FM	VITRIFIED CLAY PIPE	VCP
HIGH DENSITY POLYETHYLENE PIPE	HDPE	WASTEWATER	WW
EL INVERT ELEVATION	IE or INV		

CORDELIA STREET PS
PROJECT LOCATION
2108 CORDELIA ST

CORDELIA STREET PS LOCATION MAP

N.T.S

PAGE INDEX OF PLANS

SHEET NO.	SHEET DESCRIPTION
1	COVER SHEET
2	LEGEND, INDEX AND LOCATION
3	GENERAL NOTES
4	EXISTING AND PROPOSED SITE PLANS – CORDELIA STREET
5	DEMOLITION PLAN AND SECTION VIEW – CORDELIA STREET
6	DEMOLITION PLAN AND SECTION VIEW 2102 IVY STREET (JOE'S PLACE)
7	PROPOSED PLAN VIEW – CORDELIA STREET
8	PROPOSED SECTION VIEW – CORDELIA STREET
9	DETAIL SHEET (1 OF 3)
10	DETAIL SHEET (2 OF 3)
11	DETAIL SHEET (3 OF 3)
E1	ELECTRICAL SYMBOL LEGEND (SHT. 1 OF 2)
E2	ELECTRICAL SYMBOL LEGEND (SHT. 2 OF 2)
E3	GENERAL NOTES AND SCOPE OF WORK
E4	NOT USED
E5	CORDELIA STREET PUMP STATION SITE PLAN
E6	NOT USED
E7	CORDELIA STREET PUMP STATION ONE LINE DIAGRAM
E8	ELECTRICAL SCHEMATIC (1 OF 4) MOTOR CONTROL PANEL
E9	ELECTRICAL SCHEMATIC (2 OF 4) PUMP CONTROL PANEL
E10	ELECTRICAL SCHEMATIC (3 OF 4) MOTOR CONTROL PANEL
E10A	ELECTRICAL SCHEMATIC (4 OF 4) MOTOR CONTROL PANEL
E11	MCP TO PCP INTERCONNECTION WIRING DIAGRAM
E12	ELECTRICAL SCHEMATIC LEGEND (SHT. 1 OF 2)
E13	ELECTRICAL SCHEMATIC LEGEND (SHT. 2 OF 2)
E14	PARTS SCHEDULE (SHT. 1 OF 2)
E15	PARTS SCHEDULE (SHT. 2 OF 2)
E16	ELECTRICAL DETAILS (SHT. 1 OF 5)
E17	ELECTRICAL DETAILS (SHT. 2 OF 5)
E18	ELECTRICAL DETAILS (SHT. 3 OF 5)
E18A	ELECTRICAL DETAILS (SHT. 4 OF 5)
E18B	ELECTRICAL DETAILS (SHT. 5 OF 5)
E18C	ELECTRICAL KEYNOTES
E19	PUMP CONTROL PANEL DETAILS
E20	MOTOR CONTROL PANEL DETAILS
E21	PM1 ENCLOSURE DETAIL

PROJECT MANAGER: John Pacifici
C:\PW_WORK2\D0861421\CSP-PLTS-LEGEND_CORDELIA.DWG – (2) LEGEND – PLOTTED 11/20/2018 2:41 PM BY STARK, THOMAS
FIELD BOOK INFORMATION:–

REV#	DATE	DESCRIPTION	BY

RICARDO G BORROMEO, P.E.
FLORIDA LICENSE NO. 67101

WADE TRIM
201 North Franklin Street, Suite 1350
Tampa, FL 33602
813.882.4373
www.wadetrim.com
Certificate of Authorization No.: 3952

CITY OF TAMPA, FLORIDA
CORDELIA PUMP STATION
REHABILITATION

LEGEND, INDEX AND LOCATION

ISSUED FOR: DATE: BY:
90% PLANS 7-16-18 RGB
100% PLANS 11-20-18 RGB

JOB NO. TPA2007-01M
SHEET 2

© Wade Trim Group, Inc.

Cordelia PS Rehabilitation

DEMOLITION NOTES

D–1 SALVAGEABLE MATERIAL, AS DETERMINED BY DEPARTMENT PERSONNEL, SHALL BE DELIVERED TO A LOCATION DESIGNATED BY THE CITY. NON–SALVAGEABLE MATERIALS ARE TO BE REMOVED FROM THE SITE AND PROPERLY DISPOSED OF AT THE CONTRACTORS EXPENSE.

D–2 THE CONSTRUCTION SITES SHALL BE MAINTAINED IN AS NEAT AND ORDERLY CONDITION AS POSSIBLE DURING CONSTRUCTION OPERATIONS. SITES SHALL BE SECURED WITH TEMPORARY FENCING AND STRUCTURES DURING HOURS WHEN CONTRACTOR IS NOT PRESENT TO ENSURE SAFETY OF CITY EMPLOYEES AND THE PUBLIC.

GENERAL NOTES

G–1 CONTRACTOR SHALL COORDINATE ALL CONSTRUCTION ACTIVITIES WITH THE WASTEWATER INSPECTOR, WASTEWATER PERSONNEL AND PUMPING STATION OPERATIONS.

G–2 CONTRACTOR IS RESPONSIBLE FOR OBTAINING ALL NECESSARY RIGHT–OF–WAY PERMITS AND BUILDING PERMITS FOR THE PUMP STATION WORK.

G–3 THE CITY WILL OBTAIN ALL NECESSARY FDEP WASTEWATER PERMITS.

G–4 CONTRACTOR SHALL CALL SUNSHINE (1–800–432–4770) AT LEAST 48 HOURS PRIOR TO ANY CONSTRUCTION ACTIVITY.

G–5 AFTER WET WELL IS DEWATERED, THE CONTRACTOR SHALL CLEAN WET WELL OF ALL DEBRIS. DEBRIS MAY BE DELIVERED AND DISPOSED OF AT THE CITY OF TAMPA HOWARD F. CURREN AWTP, 2700 MARITIME BOULEVARD, TAMPA, FL 33605

G–6 TWO NEW PUMPS PER STATION SHALL BE SUPPLIED FOR THIS PROJECT. PROPOSED PUMPS ARE FLYGT PUMPS, AS SHOWN ON THE SHEETS HEREIN. ALL PROPOSED PUMP BASES SHALL BE 4–INCH DIAMETER DISCHARGE ELBOWS.

G–7 IT IS THE ENGINEERS INTENT THAT CONTINUOUS SERVICE WILL BE MAINTAINED THROUGHOUT THE PROJECT.

G–8 CONTRACTOR SHALL VERIFY QUANTITIES OF ALL NECESSARY PIPES, REDUCERS, FITTINGS, SUPPORTS, AND ANY MISCELLANEOUS BRACKETS.

G–9 DIMENSIONS SHOWN ARE NOT NECESSARILY ACCURATE TO THE DEGREE REQUIRED FOR FABRICATION. EXISTING DIMENSIONS AND VIEWS ARE SHOWN BASED ON THE BEST INFORMATION AVAILABLE. CONTRACTOR SHALL FIELD VERIFY ALL PERTINENT DIMENSIONS AND REFLECT THEM ON DETAILED SHOP DRAWINGS FOR APPROVAL BEFORE ANY FABRICATION.

G–10 SHOP DRAWINGS SHALL BE SUBMITTED AND APPROVED BY THE CITY FOR ALL PROPOSED ITEMS. ALL SUBMITTALS AND SHOP DRAWINGS SHALL BE ORIGINALS OR HIGH QUALITY COPIES (CLEARLY LEGIBLE). NO FAXED SHEETS OR POOR QUALITY COPIES WILL BE ACCEPTED FOR SUBMITTAL REVIEW.

G–11 PUMP DISCHARGE PIPING IN THE WET WELL SHALL BE 4–INCH DIAMETER HDPE, SDR–11, GREEN STRIPE, DIPS–OD HDPE JOINTS SHALL BE FLANGED WITH 316SS BACK UP RINGS.

G–12 PLUG VALVES SHALL BE DEZURIK, PEF 100% PORT, ECCENTRIC PLUG VALVES OR APPROVED EQUAL. ALL ABOVE GROUND PLUG VALVES SHALL BE PROVIDED WITH 2" NUTS AND NO HANDWHEELS.

G–13 CHECK VALVES SHALL BE DEZURIK APCO RUBBER FLAPPER SWING CHECK VALVES, SERIES 100, MODEL 104P3. THIS EQUIPMENT IS A STANDARDIZED ITEM AT THIS FACILITY AND NO "OR EQUAL" SUBMITTALS WILL BE CONSIDERED.

G–14 ALL HARDWARE, UNLESS OTHERWISE NOTED, SHALL BE TYPE 316 STAINLESS STEEL.

G–15 PIPE SUPPORTS SHALL BE CONSTRUCTED AS SHOWN IN THE PIPE SUPPORT DETAIL.

G–16 ALL CEMENTITIOUS CONCRETE AND GROUT, UNLESS OTHERWISE NOTED, SHALL BE CLASS "B", 4000 PSI COMPRESSIVE STRENGTH AT 28 DAYS. ALL REINFORCING STEEL SHALL BE GRADE 60.

G–17 OSHA STANDARD SAFETY EQUIPMENT SUCH AS SAFETY HARNESSES, GAS MONITORS, LOWER EXPLOSIVE LIMIT (LEL) DETECTORS, BREATHING APPARATUS, ETC. SHALL BE UTILIZED WHERE THE WORK DICTATES THEIR USE.

G–18 BACKFILL (NO CLAY OR CLAYEY MATERIAL) SHALL BE COMPACTED IN 6–INCH LAYERS (MAX.) TO 98% MAXIMUM DRY DENSITY OF MODIFIED PROCTOR IN CONFORMANCE WITH AASHTO T–180, METHOD A.

G–19 ALL STAINLESS STEEL PARTS TO BE WELDED SHALL BE THE LOW–CARBON VERSION OF THE GRADE OF STAINLESS STEEL THAT IS CALLED FOR, SUCH AS: T–316L OR T–304L.

G–20 ALL CONCRETE PAVEMENT, UNLESS OTHERWISE NOTED, SHALL BE MIN 8" THICK CONCRETE WITH 4X4 W6 x W6 WWF. CONCRETE SHALL BE CONSTRUCTED ON COMPACTED SUBBASE (MINIMUM 98% MODIFIED PROCTOR) WITH 1.5" DEEP CONTROL JOINTS SAWCUT @ 15' MAX, CUT WITHIN 12 HRS OF CONCRETE PLACEMENT.

G–21 CONTRACTOR TO SUBMIT METHOD FOR 100% WATERTIGHT SEALING AT PIPE PENETRATIONS THROUGH STRUCTURES. PROPOSED LINK SEAL OR APPROVED EQUAL.

G–22 CONTRACTOR SHALL PROVIDE A REDUCED PRESSURE BACKFLOW–PREVENTION DEVICE IN WATER SERVICE LINE, AS SHOWN IN DETAILS, AT A PLACE TO BE SPECIFIED DURING CONSTRUCTION. BACKFLOW PREVENTION DEVICE SHALL BE 1" WILKINS, MODEL #975 XL, OR EQUAL.

G–23 ALL DIP PIPE AND FITTING SHALL BE CLASS 53 WITH PROTECTO 401 INTERIOR COATING.

G–24 REMOVE ALL REMNANTS OF COAL TAR EPOXY IN EXISTING WET WELLS PRIOR TO LINING.

G–25 ALL METAL PIPE, FITTINGS, VALVES, ETC. SHALL RECIEVE:
1) SHOP COAT – ONE COAT, 4–6 MILS (DRY) TNEMEC N140–1211 EPOXY PRIMER.
2) FIELD COAT – ONE COAT, 5–7 MILS (DRY) TNEMEC SERIES 446 PERMA–SHIELD MCU
3) FIELD COAT
A) ABOVE GRADE : ONE COAT, 4–6 MILS (DRY) TNEMEC 1074U ENDURASHIELD (WITH FACTORY ADDED UV BLOCKER)
B) BELOW GRADE : ONE COAT, 5–7 MILS (DRY) TNEMEC SERIES 446 PERMA–SHIELD MCU

G–26 ALL CONCRETE TOP SLABS AND RISER EXTENSIONS SHALL BE 4,000 PSI, CLASS B, CAST IN PLACE CONCRETE. REBAR REINFORCEMENT SHALL BE #6 AT 6" EW. TWO (2) #5 DIAGONAL BARS, EACH 3–FT LONG, SHALL BE PLACED AT EACH CORNER OF EVERY TOP SLAB OPENING.

BUILDING CODE REFERENCES:

FLORIDA BUILDING CODE, 6TH EDITION, 2017

CITY OF TAMPA CODE OF ORDINANCES, CHAPTER 5 BUILDING CODE

NATIONAL FIRE PROTECTION ASSOCIATION (NFPA), SERIES 70

NATIONAL ELECTRICAL CODE (NEC), 2014 EDITION

PROJECT MANAGER:John Pacifici
C:\PW_WORK2\D0861421\CSP-PLTS-LEGEND_CORDELIA.DWG – (3) GENERAL NOTES – PLOTTED 11/20/2018 2:41 PM BY STARK, THOMAS
FIELD BOOK INFORMATION:–

REV#	DATE	DESCRIPTION	BY

RICARDO G BORROMEO, P.E.
FLORIDA LICENSE NO. 67101

WADE TRIM
201 North Franklin Street, Suite 1350
Tampa, FL 33602
813.882.4373
www.wadetrim.com
Certificate of Authorization No.: 3952

CITY OF TAMPA, FLORIDA
CORDELIA PUMP STATION
REHABILITATION

GENERAL NOTES

ISSUED FOR:	DATE:	BY:
90% PLANS	7–16–18	RGB
100% PLANS	11–20–18	RGB

JOB NO.: TPA2007–01M

SHEET 3

© Wade Trim Group, Inc.

Cordelia PS Rehabilitation

AERIAL
N.T.S

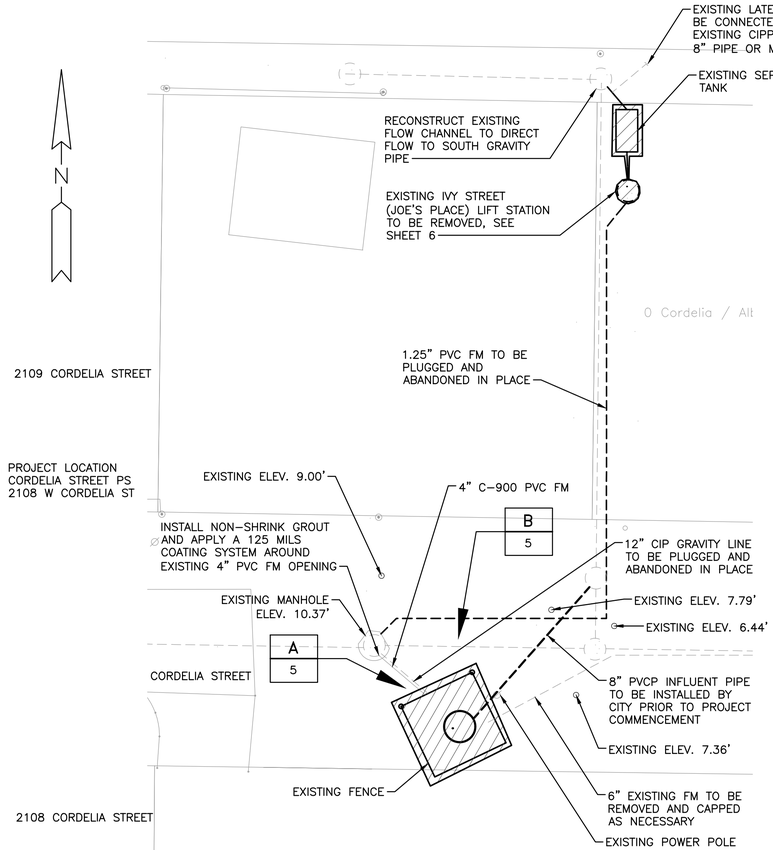

EXISTING SITE DEMO AND PHOTO KEY PLAN
N.T.S

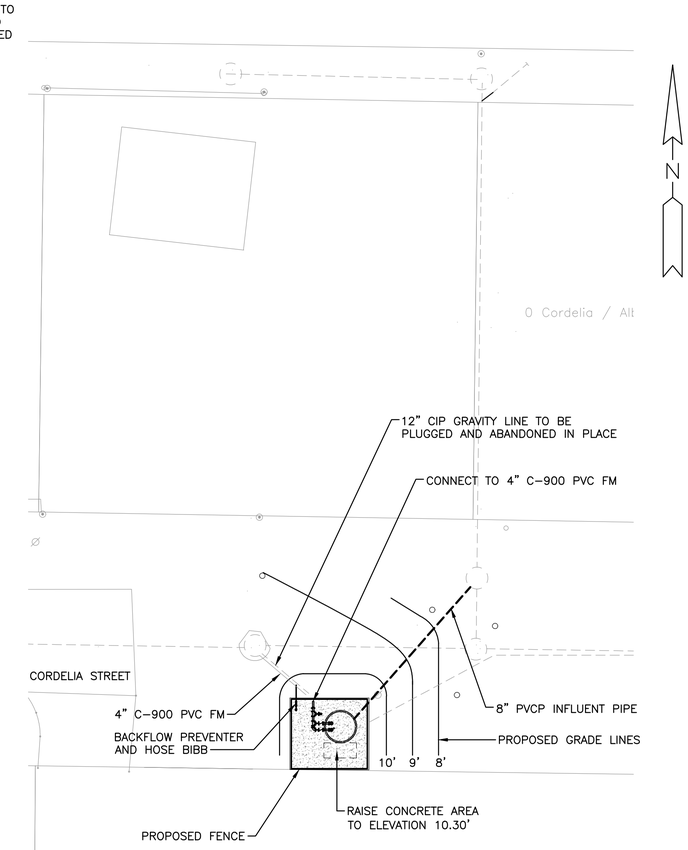

PROPOSED SITE PLAN
N.T.S

PHOTOS

PROJECT MANAGER:John Pacifici
C:\PW_WORK2\00861421\CSP-PLTS-CORDELIA.DWG - (4) SITE PLAN CORDELIA - PLOTTED 12/5/2018 6:48 AM BY MCKONE, DAVE
FIELD BOOK INFORMATION:-

REV#	DATE	DESCRIPTION	BY

RICARDO G BORROMEO, P.E.
FLORIDA LICENSE NO. 67101

WADE TRIM
201 North Franklin Street, Suite 1350
Tampa, FL 33602
813.882.4373
www.wadetrim.com
Certificate of Authorization No.: 3952

CITY OF TAMPA, FLORIDA
CORDELIA PUMP STATION
REHABILITATION

EXISTING AND PROPOSED SITE PLANS
CORDELIA STREET

ISSUED FOR:	DATE:	BY:
90% PLANS	7-16-18	RGB
100% PLANS	11-20-18	RGB

JOB NO. TPA2007-01M
SHEET 4

Cordelia PS Rehabilitation

© Wade Trim Group, Inc.

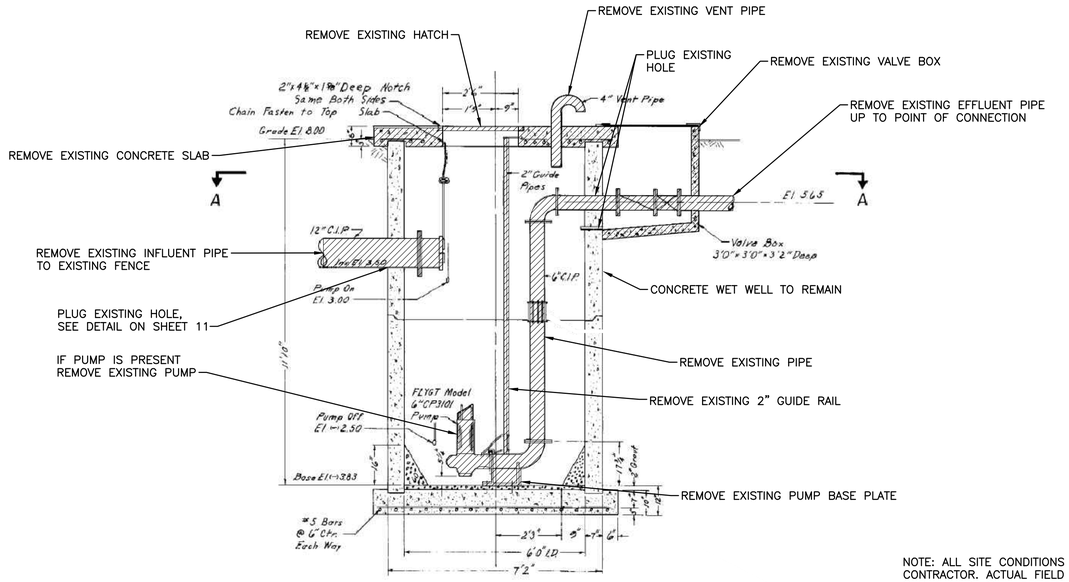

SECTION B-B

SECTION VIEW

SCALE: 3/8"=1'-0"
(34" X 22" SHEET SIZE)

NOTE: ALL SITE CONDITIONS TO BE FIELD VERIFIED BY THE CONTRACTOR. ACTUAL FIELD CONDITIONS THAT VARY FROM THAT SHOWN HERE SHALL BE REPORTED TO THE ENGINEER PRIOR TO ANY ACTIVITY. AS-BUILT DRAWINGS PROVIDED BY CITY.

HATCHED AREAS ON THIS SHEET INDICATE PIPING, FITTINGS, VALVES, STRUCTURES, EQUIPMENT AND OTHER APPURTENANCES TO BE REMOVED.

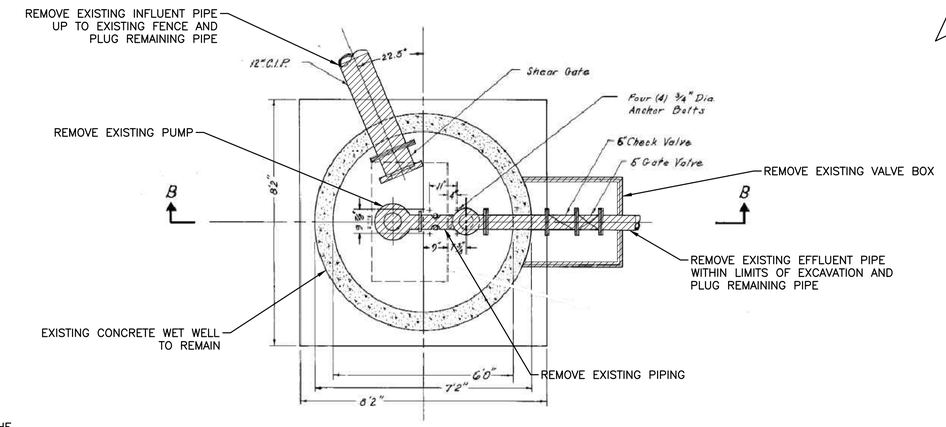

SECTION A-A

PLAN VIEW

SCALE: 3/8"=1'-0"
(34" X 22" SHEET SIZE)

* NOTE: PER CITY, THE EXISTING IVY ST. (JOE'S PLACE) PUMP STATION IS FED FROM THIS PANEL. JOE'S PLACE PUMP STATION MUST BE KEPT OPERATIONAL UNTIL FLOW IS DIVERTED TO THE CORDELIA ST PUMP STATION.

PHOTO A 4

PHOTO B 4

REV#	DATE	DESCRIPTION	BY

RICARDO G BORROMEO, P.E.
FLORIDA LICENSE NO.: 67101

WADE TRIM
201 North Franklin Street, Suite 1350
Tampa, FL 33602
813.882.4373
www.wadetrim.com
Certificate of Authorization No.: 3952

CITY OF TAMPA, FLORIDA
CORDELIA PUMP STATION
REHABILITATION

DEMOLITION PLAN AND SECTION VIEW
CORDELIA STREET

ISSUED FOR:	DATE:	BY:
90% PLANS	7-16-18	RGB
100% PLANS	11-20-18	RGB

JOB NO.: TPA2007-01M

SHEET 5

© Wade Trim Group, Inc.

Cordelia PS Rehabilitation

PROJECT MANAGER: John Pacifici
C:\PW_WORK2\D0861421\CSP-PLTS-CORDELIA.DWG - (5) DEMO CORDELIA - PLOTTED 11/20/2018 2:42 PM BY STARK, THOMAS
FIELD BOOK INFORMATION:-

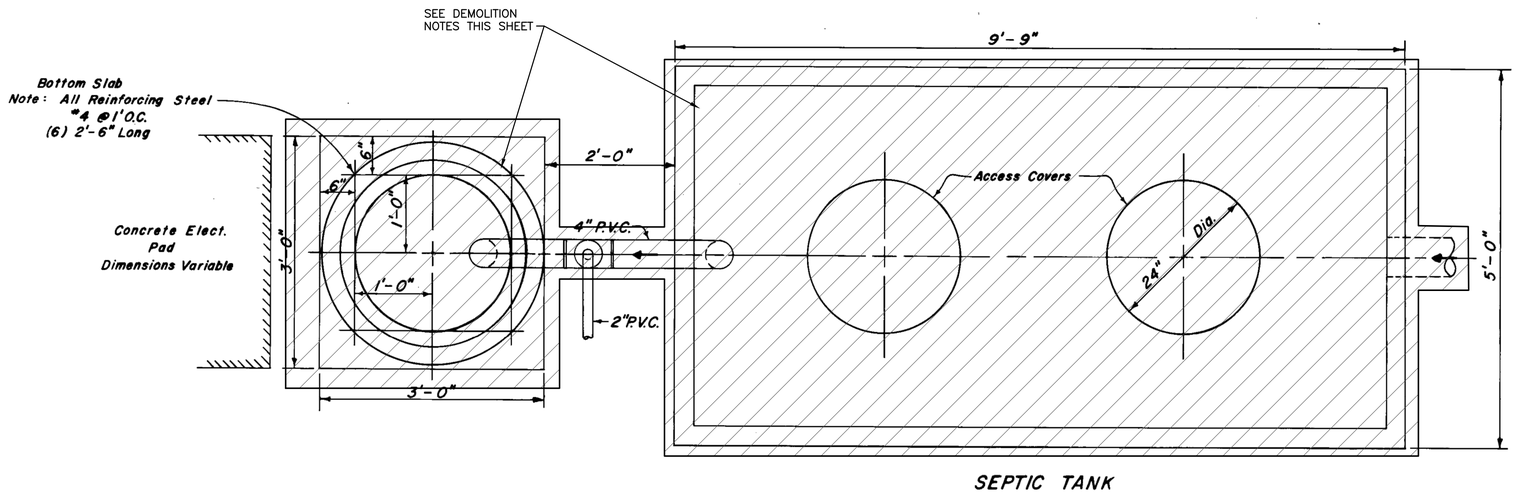

DEMOLITION PLAN

NOTES:

1. CONTRACTOR SHALL COORDINATE WITH CITY PRIOR TO THE DEMOLITION OF THIS PUMP STATION.
2. THE PROPOSED CORDELIA PUMP STATION MUST BE SUCCESSFULLY STARTED AND OPERATING PRIOR TO THE START OF DEMOLITION.
3. IT IS THE CONTRACTOR'S RESPONSIBILITY TO PROVIDE ALL TEMPORARY FACILITIES NECESSARY TO MAINTAIN OPERATIONS AT ALL TIMES.
4. ALL EXISTING ELECTRICAL BOXES AND CONDUITS SHALL BE REMOVED.

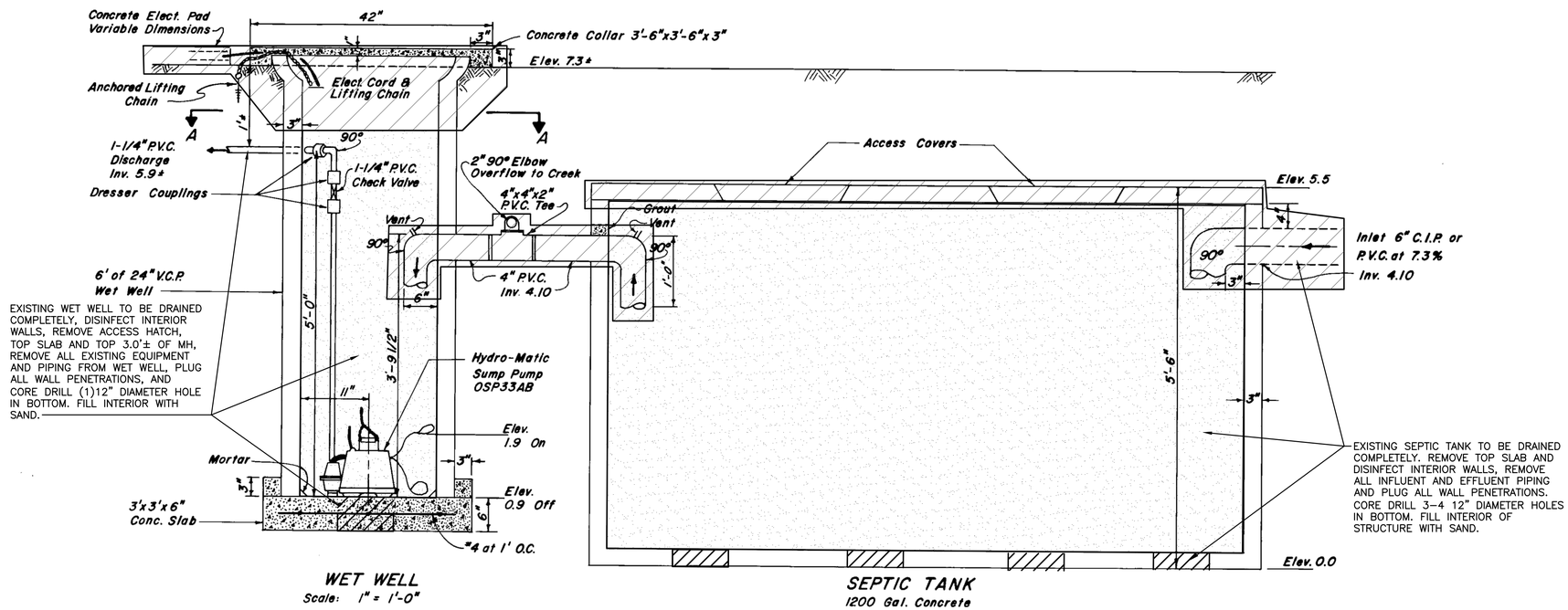

DEMOLITION SECTION

PROJECT MANAGER: John Pacifici
C:\PW_WORK2\D0861421\CSP-PLTS-CORDELIA.DWG - (6) JOES PLACE DEMO - PLOTTED 11/20/2018 2:42 PM BY STARK, THOMAS
FIELD BOOK INFORMATION:

REV#	DATE	DESCRIPTION	BY

RICARDO G BORROMEO, P.E.
FLORIDA LICENSE NO. 67101

WADE TRIM
201 North Franklin Street, Suite 1350
Tampa, FL 33602
813.882.4373
www.wadetrim.com
Certificate of Authorization No.: 3952

CITY OF TAMPA, FLORIDA
CORDELIA PUMP STATION
REHABILITATION

DEMOLITION PLAN AND SECTION VIEW
2102 IVY STREET (JOE'S PLACE)

ISSUED FOR:	DATE:	BY:
90% PLANS	7-16-18	RGB
100% PLANS	11-20-18	RGB

JOB NO. TPA2007-01M

SHEET 6

© Wade Trim Group, Inc.

Cordelia PS Rehabilitation

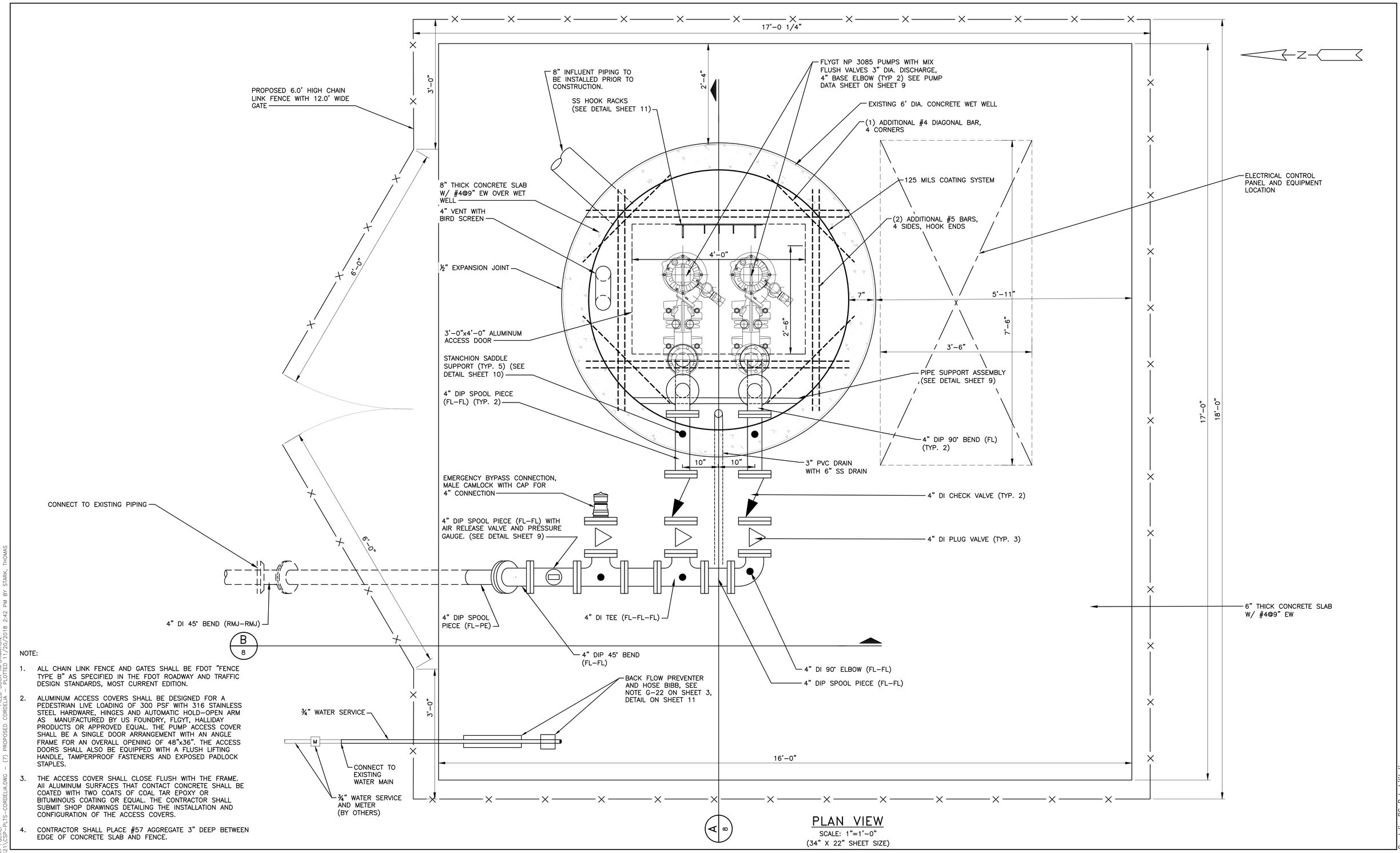

PLAN VIEW

SCALE: 1"=1'-0"
(34" X 22" SHEET SIZE)

NOTE:

1. ALL CHAIN LINK FENCE AND GATES SHALL BE FDOT "FENCE TYPE B" AS SPECIFIED IN THE FDOT ROADWAY AND TRAFFIC DESIGN STANDARDS, MOST CURRENT EDITION.
2. ALUMINUM ACCESS COVERS SHALL BE DESIGNED FOR A PEDESTRIAN LIVE LOADING OF 300 PSF WITH 316 STAINLESS STEEL HARDWARE, HINGES AND AUTOMATIC HOLD-OPEN ARM AS MANUFACTURED BY US FOUNDRY, FLGYT, HALLIDAY PRODUCTS OR APPROVED EQUAL. THE PUMP ACCESS COVER SHALL BE A SINGLE DOOR ARRANGEMENT WITH AN ANGLE FRAME FOR AN OVERALL OPENING OF 48"x36". THE ACCESS DOORS SHALL ALSO BE EQUIPPED WITH A FLUSH LIFTING HANDLE, TAMPERPROOF FASTENERS AND EXPOSED PADLOCK STAPLES.
3. THE ACCESS COVER SHALL CLOSE FLUSH WITH THE FRAME. All ALUMINUM SURFACES THAT CONTACT CONCRETE SHALL BE COATED WITH TWO COATS OF COAL TAR EPOXY OR BITUMINOUS COATING OR EQUAL. THE CONTRACTOR SHALL SUBMIT SHOP DRAWINGS DETAILING THE INSTALLATION AND CONFIGURATION OF THE ACCESS COVERS.
4. CONTRACTOR SHALL PLACE #57 AGGREGATE 3" DEEP BETWEEN EDGE OF CONCRETE SLAB AND FENCE.

REV#	DATE	DESCRIPTION	BY

RICARDO G BORROMEO, P.E.
FLORIDA LICENSE NO. 67101

WADE TRIM
201 North Franklin Street, Suite 1350
Tampa, FL 33602
813.882.4373
www.wadetrim.com
Certificate of Authorization No.: 3952

CITY OF TAMPA, FLORIDA
CORDELIA PUMP STATION
REHABILITATION

PROPOSED PLAN VIEW
CORDELIA STREET

ISSUED FOR:	DATE:	BY:
90% PLANS	7-16-18	RGB
100% PLANS	11-20-18	RGB

JOB NO. TPA2007-01M

SHEET 7

Cordelia PS Rehabilitation

© Wade Trim Group, Inc.

PROJECT MANAGER:John Pacifici
C:\PW_WORK2\00861421\CSP-PLTS-CORDELIA.DWG - (7) PROPOSED CORDELIA - PLOTTED 11/20/2018 2:42 PM BY STARK, THOMAS
FIELD BOOK INFORMATION:-

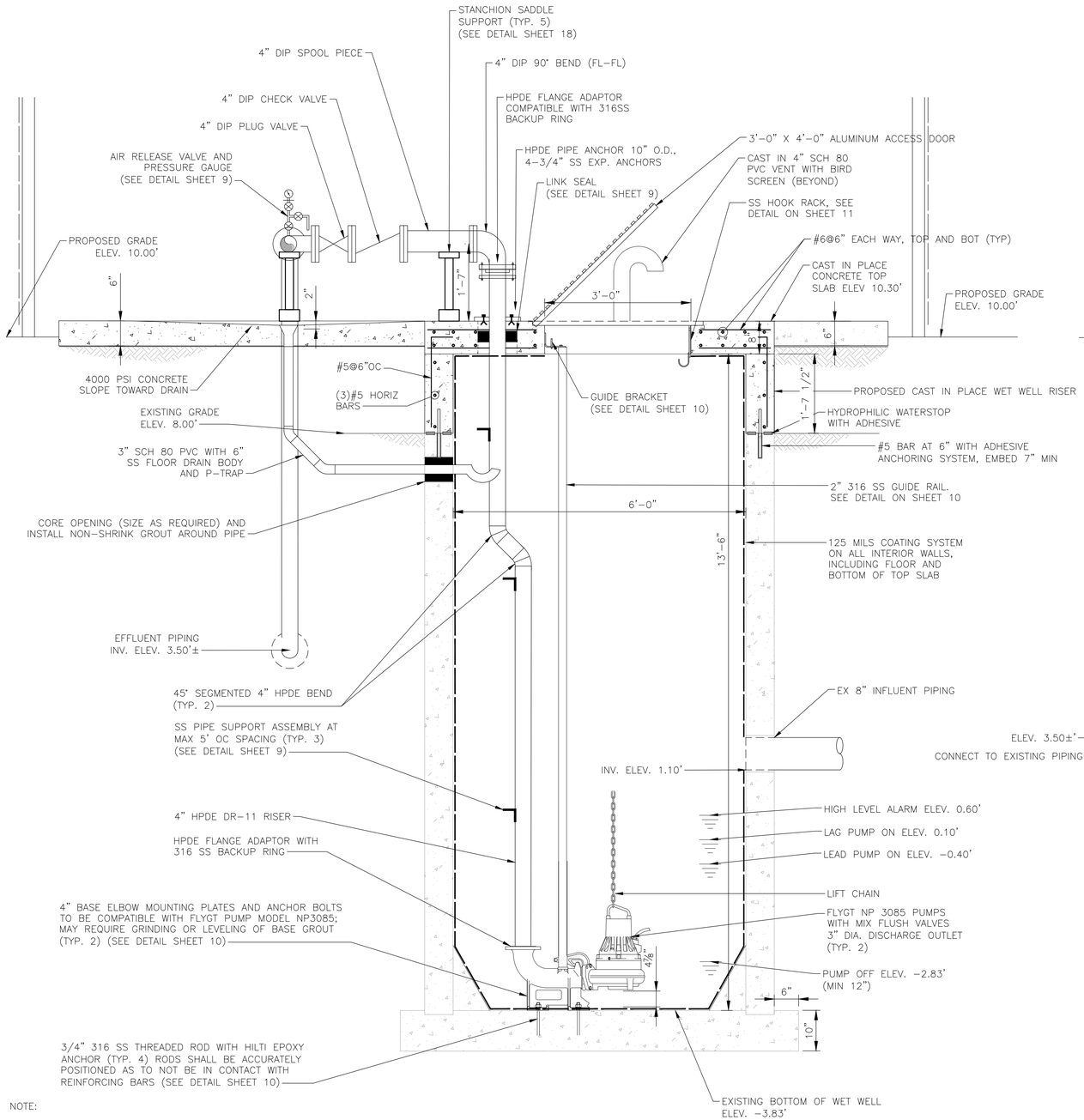

NOTE:

1. DATUM IS NAVD 88
2. CONTRACTOR TO MATCH EXISTING GRADE OUTSIDE OF FENCE. SEE GRADING PLAN IN SHEET 4 FOR REFERENCE.
3. CAST IN PLACE CONCRETE SHALL BE 4000PSI, CLASS B.

SECTION A-A

SCALE: 3/4"=1'-0"
(34" X 22" SHEET SIZE)

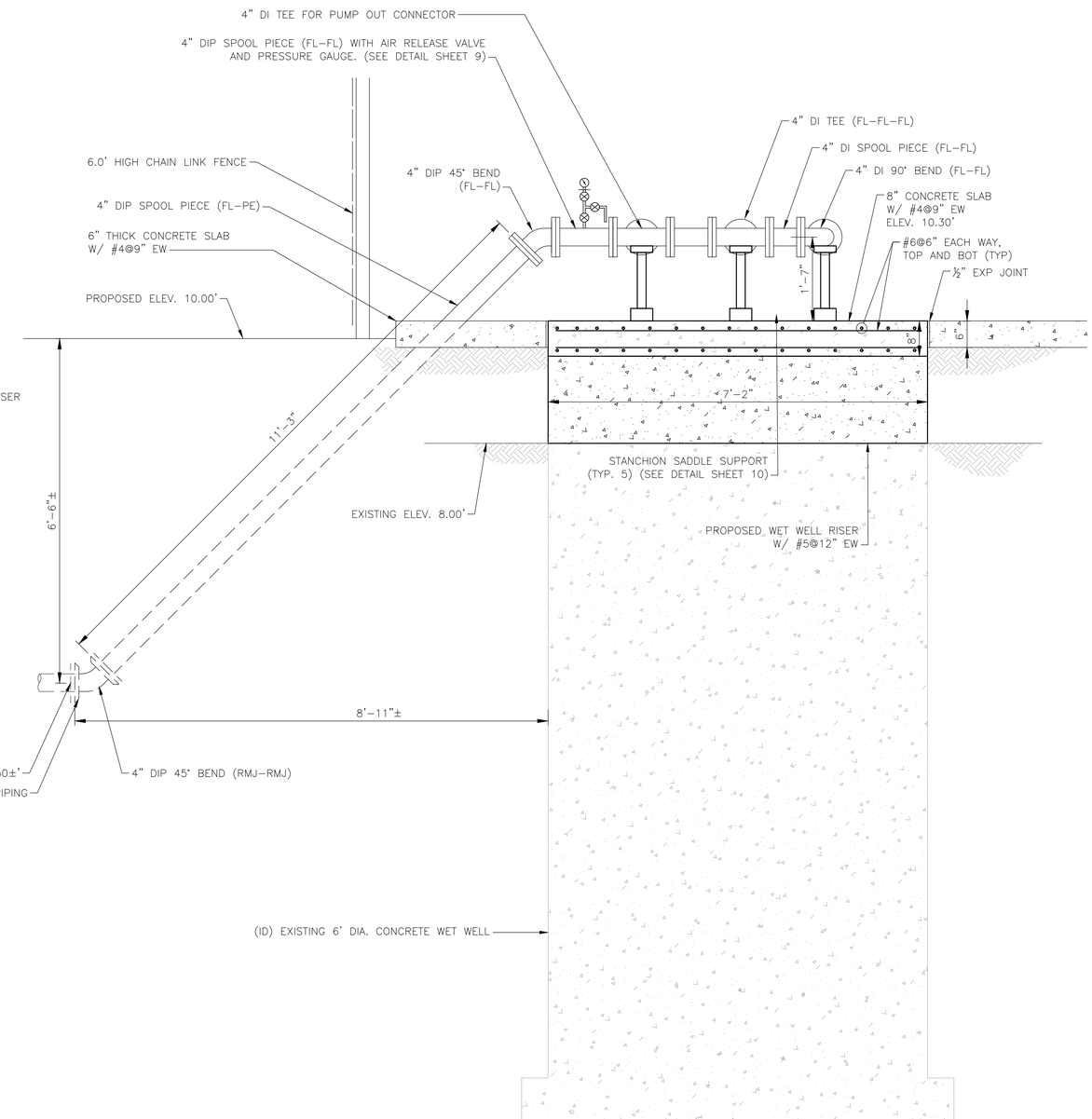

SECTION B-B

SCALE: 3/4"=1'
(34" X 22" SHEET SIZE)

REV#	DATE	DESCRIPTION	BY

RICARDO G. BORROMEO, P.E.
FLORIDA LICENSE NO. 67101

WADE TRIM

201 North Franklin Street, Suite 1350
Tampa, FL 33602
813.882.4373
www.wadetrim.com
Certificate of Authorization No.: 3952

CITY OF TAMPA, FLORIDA
CORDELIA PUMP STATION
REHABILITATION

PROPOSED SECTION VIEW
CORDELIA STREET

ISSUED FOR: DATE: BY:
90% PLANS 7-16-18 RGB
100% PLANS 11-20-18 RGB

JOB NO. TPA2007-01M

SHEET 8

Cordelia PS Rehabilitation

© Wade Trim Group, Inc.

PROJECT MANAGER:John Pacifici
C:\PW_WORK2\D0861421\CSP-PLTS-CORDELIA.DWG - (8) PROPOSED CORDELIA-2 - PLOTTED 11/20/2018 2:42 PM BY STARK, THOMAS
FIELD BOOK INFORMATION:

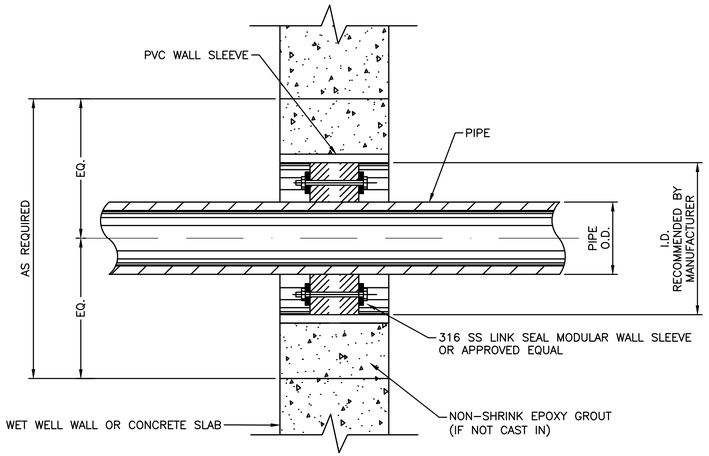

LINK SEAL DETAIL

N.T.S.

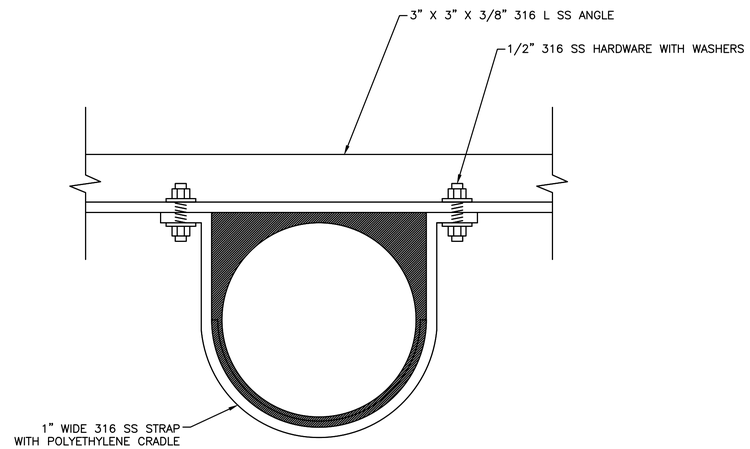

PIPE STRAP SUPPORT

N.T.S.

NP 3085 MT 3~ Adaptive 463

Performance curve

FLYGT

Pump

Discharge Flange Diameter	3 1/8 inch
Suction Flange Diameter	80 mm
Impeller diameter	$5^{7}/_{16}$"
Number of blades	2

Motor

Motor #	N3085.060 15-10-4AL-W 3hp
Stator variant	12
Frequency	60 Hz
Rated voltage	230 V
Number of poles	4
Phases	3~
Rated power	3 hp
Rated current	8.7 A
Starting current	44 A
Rated speed	1700 rpm

Power factor	
1/1 Load	0.83
3/4 Load	0.77
1/2 Load	0.66
Motor efficiency	
1/1 Load	78.1 %
3/4 Load	79.1 %
1/2 Load	77.4 %

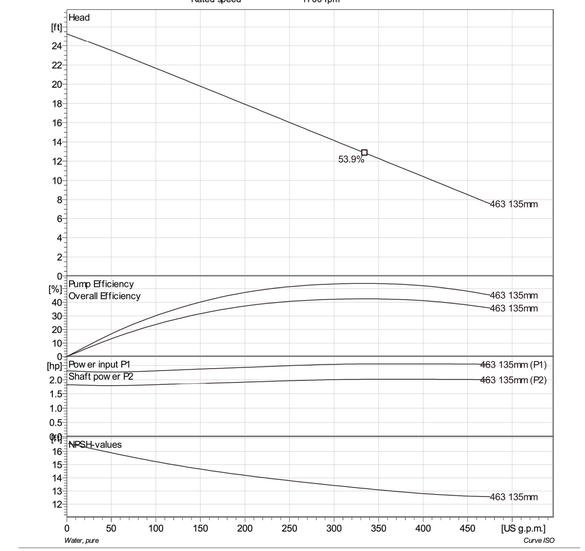

PUMP CURVE DATA

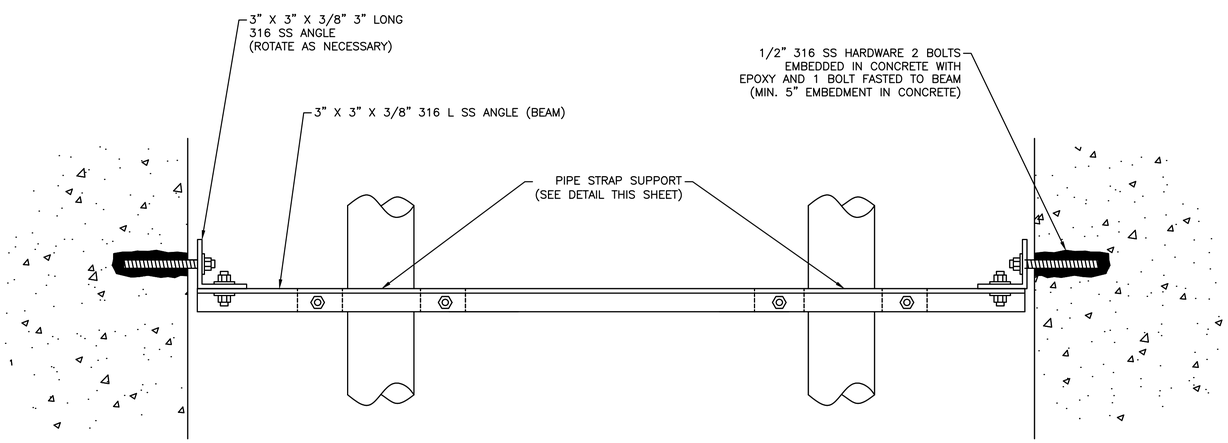

PIPE SUPPORT ASSEMBLY

N.T.S.

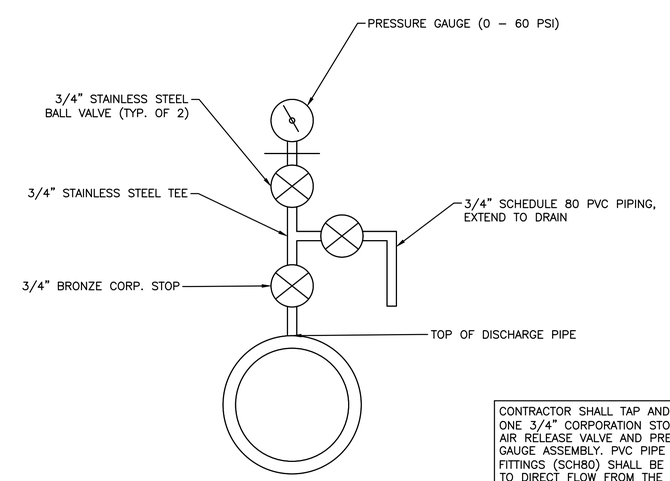

CONTRACTOR SHALL TAP AND DRILL ONE 3/4" CORPORATION STOP WITH AIR RELEASE VALVE AND PRESSURE GAUGE ASSEMBLY. PVC PIPE AND FITTINGS (SCH80) SHALL BE PROVIDED TO DIRECT FLOW FROM THE BALL VALVE DOWNWARD TO THE FLOOR.

AIR RELEASE AND PRESSURE GAUGE ASSEMBLY

N.T.S.

PROJECT MANAGER: John Pacifici
C:\PW_WORK2\D0861421\CSP-PLTS-DETAILS_CORDELIA.DWG – (9)-DETAILS – PLOTTED 11/20/2018 2:42 PM BY STARK, THOMAS
FIELD BOOK INFORMATION:–

REV#	DATE	DESCRIPTION	BY

RICARDO G BORROMEO, P.E.
FLORIDA LICENSE NO.: 67101

WADE TRIM
201 North Franklin Street, Suite 1350
Tampa, FL 33602
813.882.4373
www.wadetrim.com
Certificate of Authorization No.: 3952

CITY OF TAMPA, FLORIDA
CORDELIA PUMP STATION
REHABILITATION

DETAIL SHEET (1 OF 3)

ISSUED FOR:	DATE:	BY:
90% PLANS	7-16-18	RGB
100% PLANS	11-20-18	RGB

JOB NO.: TPA2007-01M

SHEET 9

Cordelia PS Rehabilitation

© Wade Trim Group, Inc.

PUMP BASE ELL MOUNTING PLATE DIMENSIONS					
A	B	C	D	E	F
20"	16"	8"	4"	9 7/8"	1/2"

NOTES:
1. INSTALL DOUBLE NUTS ON ALL EIGHT (8) THREADED RODS.
2. THE PLATE EDGES AND ALL HOLES SHALL BE GROUND SMOOTH TO REMOVE ALL BURRS.
3. DIMENSIONS FOR "C" & "E" ARE FOR FLYGT PUMPS, INC. BASE ELLS.

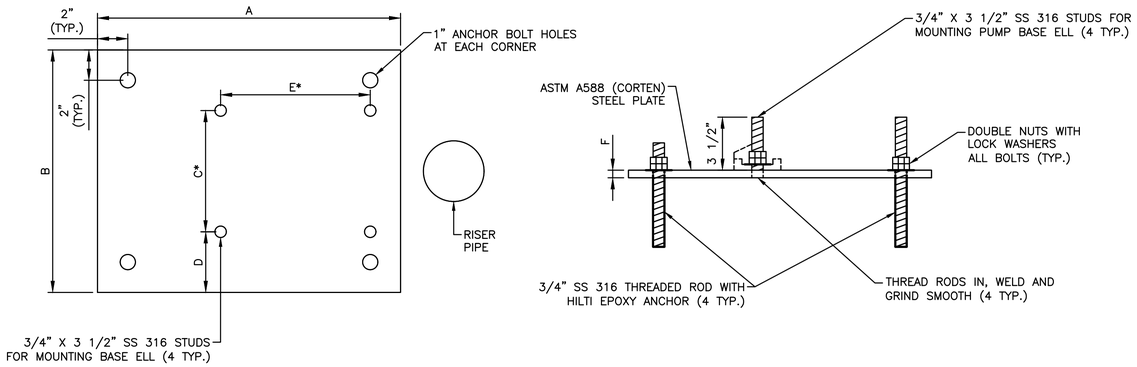

PLAN

PROFILE

PUMP BASE ELL MOUNTING PLATE DETAIL

N.T.S.

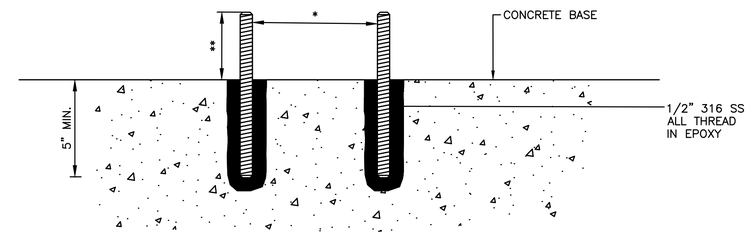

* ALIGNMENT OF ANCHOR BOLTS SHALL BE AS RECOMMENDED BY PUMP MANUFACTURER.

** CONTRACTOR SHALL PROVIDE A MINIMUM 1/2 INCH BOLT PROTRUSION ABOVE THE FINAL NUT LOCATION AFTER THE NUT IS TIGHTENED TO MANUFACTURE'S RECOMMENDATION.

ANCHOR BOLT DETAIL

N.T.S.

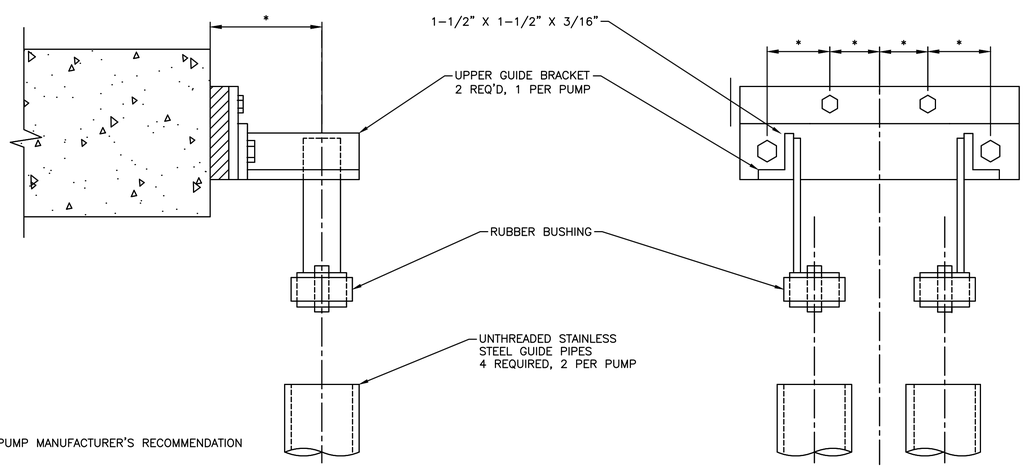

* PER PUMP MANUFACTURER'S RECOMMENDATION

GUIDE BRACKET DETAIL (SUPPLIED WITH PUMPS)

N.T.S.

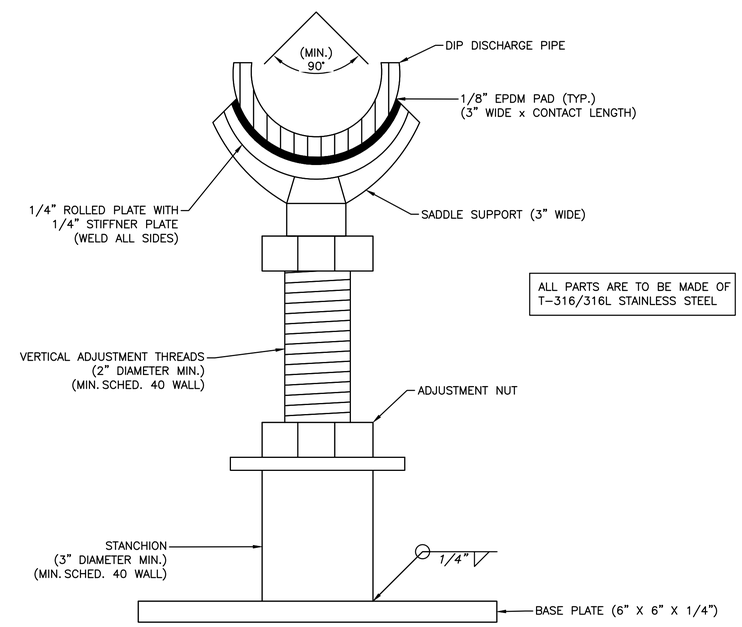

SECTION VIEW – STAINLESS STEEL STANCHION SADDLE SUPPORT

N.T.S.

PROJECT MANAGER: John Pacifici
C:\PW_WORK2\D0861421\CSP-PLTS-DETAILS_CORDELIA.DWG – (10)-DETAILS – PLOTTED 11/20/2018 2:42 PM BY STARK, THOMAS
FIELD BOOK INFORMATION:–

REV#	DATE	DESCRIPTION	BY

RICARDO G BORROMEO, P.E.
FLORIDA LICENSE NO. 67101

WADE TRIM
201 North Franklin Street, Suite 1350
Tampa, FL 33602
813.882.4373
www.wadetrim.com
Certificate of Authorization No.: 3952

CITY OF TAMPA, FLORIDA
CORDELIA PUMP STATION
REHABILITATION

DETAIL SHEET (2 OF 3)

ISSUED FOR:	DATE:	BY:
90% PLANS	7-16-18	RGB
100% PLANS	11-20-18	RGB

JOB NO. TPA2007-01M

SHEET 10

Cordelia PS Rehabilitation

© Wade Trim Group, Inc.

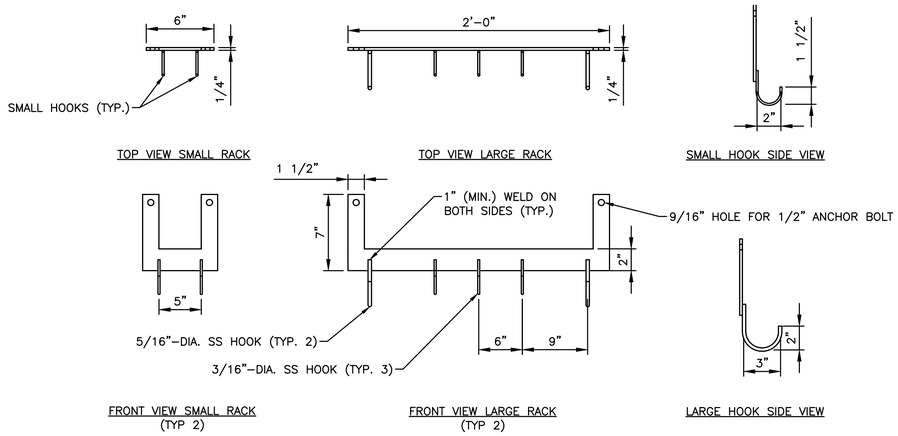

ALL PARTS ARE TO BE MADE OF T-316/316L STAINLESS STEEL

NOTE: INSTALL FLOATS IN A MANNER TO MAINTAIN PROPER OPERATIONAL CLEARANCE.

PROPOSED STAINLESS STEEL HOOK RACKS

N.T.S.

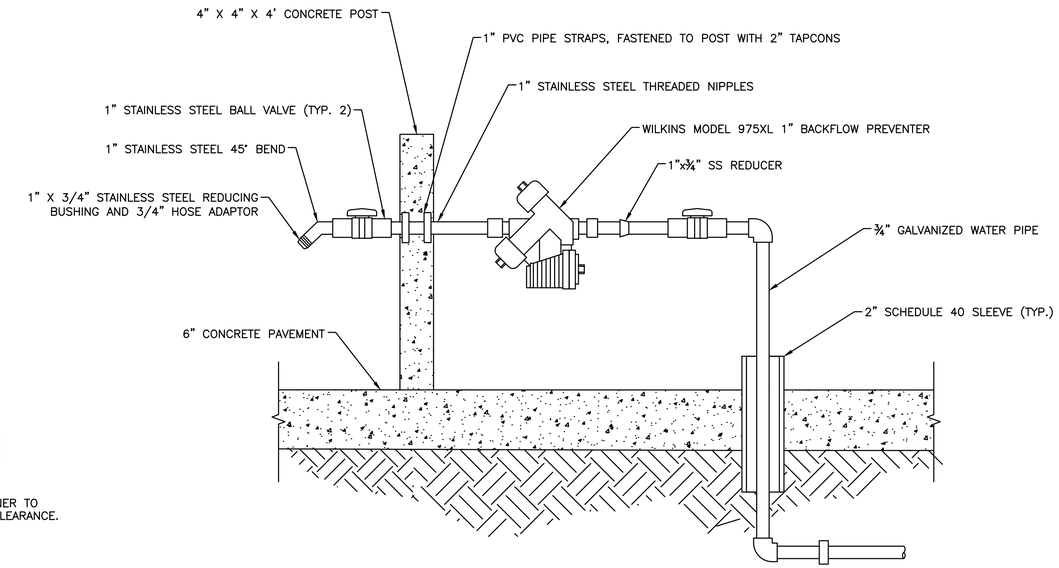

BACKFLOW PREVENTER DETAIL

N.T.S.

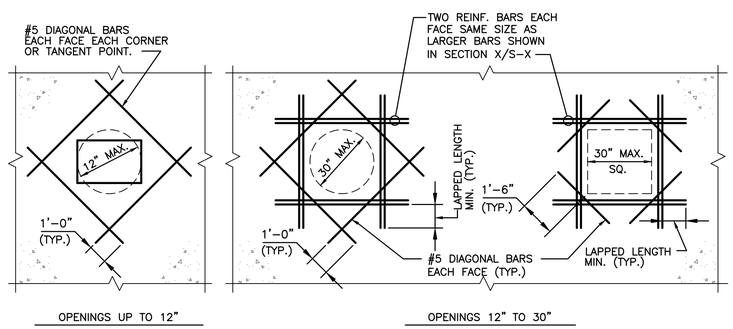

REINFORCEMENT DETAILS FOR SMALL OPENINGS

N.T.S.

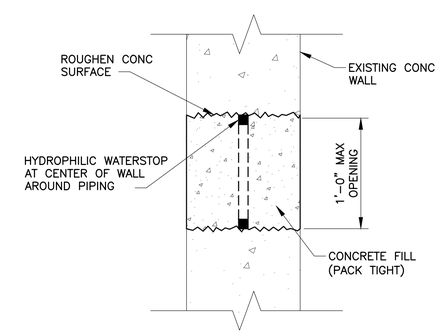

EXISTING WALL PENETRATION FILL IN DETAIL (12" OR LESS)

N.T.S.

FIELD BOOK INFORMATION:-
PROJECT MANAGER: John Pacifici
C:\PW_WORK2\D0861421\CSP-PLTS-DETAILS_CORDELIA.DWG - (11) DETAILS - PLOTTED 11/20/2018 2:42 PM BY STARK, THOMAS

REV#	DATE	DESCRIPTION	BY

RICARDO G BORROMEO, P.E.
FLORIDA LICENSE NO.: 67101

WADE TRIM
201 North Franklin Street, Suite 1350
Tampa, FL 33602
813.882.4373
www.wadetrim.com
Certificate of Authorization No.: 3952

CITY OF TAMPA, FLORIDA
CORDELIA PUMP STATION
REHABILITATION

DETAIL SHEET (3 OF 3)

ISSUED FOR:	DATE:	BY:
90% PLANS	7-16-18	RGB
100% PLANS	11-20-18	RGB

JOB NO.: TPA2007-01M

SHEET 11

Cordelia PS Rehabilitation

© Wade Trim Group, Inc.

ONE LINE DIAGRAM SYMBOLS

600 A — BUS–RATING AS SHOWN

INCOMING LINE

OUTCOMING LINE

DISCONNECTING DEVICE

CONDUCTORS CONNECTED

CONDUCTORS NOT CONNECTED

100A — FUSE–RATING AS SHOWN

100A — SINGLE THROW DISCONNECT SWITCH–RATING AS SHOWN

100A/70A — FUSED DISCONNECT SWITCH–100A SWITCH, 70A FUSE

100A — LOW VOLTAGE AIR CIRCUIT BREAKER WITHOUT TRIP DEVICE 100A FRAME

225A/125A — LOW VOLTAGE AIR CIRCUIT BREAKER WITH 225A FRAME AND 125A TRIP

52 — MEDIUM VOLTAGE DRAWOUT TYPE AIR CIRCUIT BREAKER

GROUND CONNECTION

SPD — LIGHTNING OR SURGE ARRESTOR

SURGE CAPACITOR

POWER TRANSFORMER WITH WINDING CONNECTIONS INDICATED

CPT — CONTROL POWER TRANSFORMER

PT — POTENTIAL TRANFORMER

CT — CURRENT TRANSFORMER

THERMAL OVERLOAD ELEMENT (OL)

5 — SQUIRREL CAGE MOTOR (INDICATE HORSEPOWER)

G — GENERATOR

R — INDICATING LIGHT (R–RED, G–GREEN, A–AMBER, B–BLUE, W–WHITE)

COMBINATION STARTER WITH CONTROL TRANSFORMERS AND OVERLOAD RELAYS AND MOTOR CIRCUIT PROTECTOR

M — FULL VOLTAGE NON REVERSING

F, R — FULL VOLTAGE REVERSING

F, S — FULL VOLTAGE TWO SPEED

SCHEMATIC AND WIRING DIAGRAM SYMBOLS

M — OPERATING COIL

M–MOTOR STARTER
C– CONTACTOR
F– FORWARD
R– REVERSE

AR– AUXILIARY RELAY
CR– CONTROL RELAY
TR– TIME DELAY RELAY

NORMALLY OPEN CONTACT (N.O.)

NORMALLY CLOSED CONTACT (N.C.)

NORMALLY OPEN CONTACT WITH TIME DELAY CLOSING (ON–DELAY)

INSTANT OPEN– TIME DELAY CLOSED CONTACT (OFF DELAY)

NORMALLY CLOSED CONTACT WITH TIME DELAY OPENING (ON–DELAY)

INSTANT CLOSE– TIME DELAY OPEN CONTACT (OFF DELAY)

R — INDICATING LIGHT– PUSH TO TEST (R–RED, G–GREEN, A–AMBER, B–BLUE, W–WHITE)

H O A — 3–POSITION SELECTOR SWITCH (SHOWN IN "H" POS.)

NORMALLY OPEN PUSHBUTTON–MOMENTARY CONTACT

NORMALLY CLOSED PUSHBUTTON–MOMENTARY CONTACT

DOUBLE CIRCUIT PUSHBUTTON WITH SPRING RETURN TO NORMAL

TRANSFORMER

OL — OVERLOAD RELAY CONTACT

THERMAL OVERLOAD ELEMENT (OL)

ON–OFF SWITCH

G — GROUND BUS

N — NEUTRAL BUS (INSULATED)

SINGLE–POLE CIRCUIT BREAKER

NORMALLY OPEN N.O.	NORMALLY CLOSED N.C.	
		LIMIT SWITCH
		FLOAT SWITCH
		PRESSURE SWITCH
		FLOW SWITCH
		TEMPERATURE

NOTE:

THE SYMBOLS SHOWN COMPRISE A GENERAL LEGEND TO FACILITATE THE USE OF PLANS. REFER TO THE PLANS AND SPECIFICATIONS FOR ITEMS REQUIRED.

PROJECT MANAGER: John Pacifici
C:\PW_WORK2\D0861421\EDG-PLTS-ELECTRICAL LEGEND 1 CORDELIA.DWG – E1 – PLOTTED 11/20/2018 2:58 PM BY STARK, THOMAS
FIELD BOOK INFORMATION:–

REV#	DATE	DESCRIPTION	BY

ALAN M. SCHWAB, P.E.
FLORIDA LICENSE NO. 61313

WADE TRIM
201 North Franklin Street, Suite 1350
Tampa, FL 33602
813.882.4373
www.wadetrim.com
Certificate of Authorization No.: 3952

CITY OF TAMPA, FLORIDA
CORDELIA PUMP STATION
REHABILITATION

ELECTRICAL SYMBOL LEGEND (SHT. 1 OF 2)

ISSUED FOR: DATE: BY:
90% PLANS 7–16–18 RGB
100% PLANS 11–20–18 RGB

JOB NO. TPA2007–01M
SHEET E1

© Wade Trim Group, Inc.

Cordelia PS Rehabilitation

POWER AND LIGHTING SYMBOLS

EXPOSED CONDUIT RUN

CONDUIT RUN CONCEALED IN FLOOR OR UNDERGROUND

CONDUIT RUN CONCEALED IN WALLS, ABOVE SUSPENDED CEILING, OR IN ROOF SLAB

CONDUIT WITH HOT, NEUTRAL AND GROUND WIRES (LONG LINE IS NEUTRAL; LONG LINE WITH DOTS DENOTE GROUND)

PNL-1 1,3,5 — HOMERUN TO LIGHTING PANELBOARD (PNL-1 INDICATES PANELBOARD AND 1, 3, 5 INDICATES 20A-1P CKTS. 1, 3 AND 5)

FLEXIBLE LIQUIDTIGHT CONDUIT

CONDUIT-UP (OR TOWARDS VIEWER)

CONDUIT-DOWN (OR AWAY FROM VIEWER)

GROUNDING CONDUCTOR

GROUND ROD

LIGHTNING ROD

CEILING MOUNTED INCANDESCENT OR MERCURY VAPOR FIXTURE. "A" INDICATES FIXTURE TYPE LISTED IN SCHEDULE

WALL MOUNTED LIGHTING FIXTURE

EXIT SIGN

EMERGENCY INCANDESCENT OR MERCURY VAPOR LIGHTING FIXTURE

FLUORESCENT FIXTURE

EMERGENCY FLUORESCENT FIXTURE

POLE MOUNTED LIGHTING FIXTURE

4 — DUPLEX RECEPTACLE- 20 A, 120 V, 3 WIRE (TO PNL- CIRCUIT No.4)

30 A — SINGLE RECEPTACLE - 2 POLE, 3 WIRE, 240V, RATING NOTED

60 A — 3 POLE, 4 WIRE, 240V WELDING OUTLET (60 A)

SINGLE POLE SWITCH

2P — TWO POLE SWITCH

3 — THREE WAY SWITCH

J — OUTLET BOX WITH BLANK COVER

JB — JUNCTION BOX

PB — PULL BOX

TB — TERMINAL BOX

GENERAL SYMBOLS

START-STOP PUSHBUTTON

ON/OFF/L — ON-OFF MAINTAINED CONTACT PUSHBUTTON WITH LOCK ATTACHMENT

S/L — INDICATING LIGHT AND START-STOP PUSHBUTTON WITH LOCK ATTACHMENT ON STOP

RESUME STOP/L — PUSH/PULL BUTTON WITH STOP LOCK. (PULL TO RESUME- PUSH TO STOP)

SELECTOR SWITCH ("HOA" INDICATES HAND, OFF, AND AUTO; "MOR" INDICATES MANUAL, OFF, AND REMOTE; ETC)

I L — ON-OFF SWITCH WITH LOCK ATTACHMENT ON OFF POSITION

FL — FLOW SWITCH

LS — LIMIT SWITCH

P — PRESSURE SWITCH

S — SOLENOID OPERATED VALVE

T — TEMPERATURE SWITCH

F — FLOAT SWITCH

L — LEVEL TRANSMITTER (PRESSURE ANALOG TYPE)

LC — LEVEL TRANSMITTER (FLOAT TYPE)

T — TEMPERATURE TRANSMITTER

FT — FLOW TRANSMITTER

MH — DESIGNATES MOUNTING HEIGHT

WP — DESIGNATES WATERPROOF EQUIPMENT

XP — DESIGNATES EXPLOSIONPROOF EQUIPMENT

MOV — DESIGNATES MOTOR OPERATED VALVE

EX. — DESIGNATES EXISTING EQUIPMENT

PROP. — DESIGNATES PROPOSED EQUIPMENT

NOTE:
THE SYMBOLS SHOWN COMPRISE A GENERAL LEGEND TO FACILITATE THE USE OF PLANS. REFER TO THE PLANS AND SPECIFICATIONS FOR ITEMS REQUIRED.

Cordelia PS Rehabilitation

PROJECT MANAGER: John Pacifici
C:\PW_WORK2\D0861421\EDG-PLTS-ELECTRICAL LEGEND 2 CORDELIA.DWG - E2 - PLOTTED 11/20/2018 2:58 PM BY STARK, THOMAS
FIELD BOOK INFORMATION:-

REV#	DATE	DESCRIPTION	BY

ALAN M. SCHWAB, P.E.
FLORIDA LICENSE NO. 61313

WADE TRIM
201 North Franklin Street, Suite 1350
Tampa, FL 33602
813.882.4373
www.wadetrim.com
Certificate of Authorization No.: 3952

CITY OF TAMPA, FLORIDA
CORDELIA PUMP STATION
REHABILITATION

ELECTRICAL SYMBOL LEGEND (SHT. 2 OF 2)

ISSUED FOR:	DATE:	BY:
90% PLANS	7-16-18	RGB
100% PLANS	11-20-18	RGB

JOB NO. TPA2007-01M
SHEET E2

© Wade Trim Group, Inc.

GENERAL NOTES

1. CONTRACTOR SHALL SUBMIT SHOP DRAWINGS FOR APPROVAL PRIOR TO PURCHASING EQUIPMENT OR COMMENCING CONSTRUCTION.

2. ALL POWER CONDUCTORS SHALL BE STRANDED COPPER, #12 AWG MIN. W/XHHW-2 INSULATION, UNLESS OTHERWISE NOTED.

3. ALL WIRING SHALL BE IDENTIFIED W/NUMBERS AT ALL TERMINALS AND ON WIRING DIAGRAMS.

4. VERIFY ALL MECHANICAL EQUIPMENT SIZES AND RATING PRIOR TO CONNECTING.

5. FIELD VERIFY ALL EQUIPMENT LOCATIONS AND CONNECTIONS PRIOR TO COMMENCING CONSTRUCTION.

6. PLANS ARE DESIGNED IN ACCORDANCE WITH THE 6TH EDITION 2017 OF THE FLORIDA BUILDING CODE AND THE 2014 EDITION OF THE NATIONAL ELECTRICAL CODE. CONTRACTOR SHALL ENSURE THAT ALL ELECTRICAL WORK PERFORMED SHALL ADHERE TO THE SAME ACCORDANCE AND ALL APPLICABLE LOCAL ORDINANCES.

7. ALL THREADED CONNECTIONS SHALL BE COATED W/ ALUMA-SHIELD ANTI-SIEZE COMPOUND MANUFACTURED BY THOMAS & BETTS (T & B) OR EQUAL.

8. ALL PANELS, DISCONNECTS, SWITCHES, AND EQUIPMENT COVERPLATES SHALL BE LABELED W/ NAMEPLATES. NAMEPLATES SHALL BE THREE-PLY PHENOLIC BLACK-WHITE-BLACK ENGRAVED THROUGH THE FIRST BLACK LAYER. LETTERING SHALL BE 0.5 CM (3/16") MIN. EDGE OF NAMEPLATE SHALL BE BEVELED 45 DEG.

9. ALL CONDUIT SHALL BE SUPPORTED AT MAXIMUM 5'-0" INTERVALS.

10. ALL CIRCUITS SHALL HAVE A PROPERLY SIZED GROUNDING CONDUCTOR ROUTED INSIDE EACH CONDUIT W/ POWER CONDUCTORS.

11. ALL CONDUCTOR LENGTHS SHALL BE CONTINUOUS, NO SPLICES OR CONDUCTOR TERMINATIONS SHALL BE PERMITTED UNLESS SPECIFICALLY DESIGNED IN THE DRAWINGS.

12. NEATLY COIL ALL SPARE CONDUCTORS & TAPE W/ VINYL ELECTRICAL TAPE (SCOTCH 33+).

13. PROVIDE A MINIMUM OF 3'-6" CLEARANCE IN FRONT OF ALL ELECTRICAL EQUIPMENT IN ACCORDANCE W/ ARTICLE 110 OF THE NEC.

14. ALL FASTENING HARDWARE (SCREW, BOLTS NUTS ETC.) SHALL BE 316-STAINLESS STEEL. FASTENING HARDWARE CONSTRUCTED OF FERROUS MATERIAL ARE NOT ACCEPTABLE.

15. EXPOSED CONDUITS SHALL BE NON-COATED RIGID ALUMINUM CONDUIT, UNLESS OTHERWISE NOTED (UON), INSTALL PVC COATED RIGID ALUMINUM CONDUIT TO THE WET WELL, UNLESS OTHERWISE NOTED (UON).

16. DIRECT BURIED AND CONCRETE ENCASED CONDUIT SHALL BE SCHEDULE 80 PVC, UNLESS OTHERWISE NOTED. TRANSITIONS FROM ABOVE-GRADE RIGID ALUMINUM CONDUIT TO NONMETALLIC CONDUIT SHALL BE ACCOMPLISHED WITH A THREADED ADAPTER. RIGID ALUMINUM CONDUIT INSTALLED ABOVE GRADE AND EXTENDING BELOW GRADE SHALL INCLUDE THE FIRST 90° ELBOW. ALL RIGID ALUMINUM CONDUITS EXTENDING BELOW GRADE SHALL BE COATED WITH TWO COATS OF ASPHALTUM-TYPE PAINT ALONG ITS ENTIRE LENGTH BELOW GRADE AND EXTENDING 6" ABOVE GRADE OR ABOVE THE TOP OF THE FINISHED SLAB.

17. ABOVE GRADE INDOOR, AND NON-WASHDOWN AREAS, RIGID ALUMINUM CONDUIT CONNECTIONS TO CONTROL BOXES, ETC. SHALL BE MADE WITH ALUMINUM DOUBLE LOCKNUTS AND BUSHINGS. TURN DOWN ON THREADS TO SOLIDLY CONNECT RACEWAY TO BOX OR ENCLOSURE.

18. ALUMINUM WATERTIGHT HUBS (MYERS HUBS) SHALL BE USED FOR CONNECTIONS TO CONTROL BOXES, ETC. MOUNTED OUTDOORS, BELOW GRADE, OR WASHDOWN AREAS.

19. A 316-STAINLESS STEEL CHANNEL ERECTOR SYSTEM SHALL BE USED TO SUPPORT ALL CONDUITS, BOXES ETC. USE 316 STAINLESS STEEL MOUNTING HARDWARE.

20. THE CONTRACTOR SHALL FIELD VERIFY EXISTING CONDITIONS AND MAKE ADJUSTMENTS AS NECESSARY TO EXECUTE THE PROPOSED INSTALLATIONS.

21. ALL EXISTING INSTALLATIONS DENOTED ON THE DRAWINGS ARE FOR THE CONTRACTORS REFERENCE ONLY. ALL EXISTING INSTALLATIONS SHALL BE FIELD VERIFIED PRIOR TO SUBMITTING A BID AND PRIOR TO COMMENCING CONSTRUCTION.

22. PULL BOXES SHALL BE INSTALLED AS NECESSARY TO FACILITATE WIRE PULLS AND AVOID EXCESSIVE PULLING TENSION ON WIRING. IN NO CASE SHALL CONDUIT LENGTHS EXCEED 150' OR THE EQUIVALENT OF FOUR QUARTER BENDS (360 DEGREES TOTAL) WITHOUT A PULL BOX. PULL BOXES SHALL BE SIZED IN ACCORDANCE WITH ARTICLE 314 OF THE NEC.

23. THE WET WELL CLASSIFICATION IS CLASS 1, DIVISION 1, GROUP D, (HAZARDOUS AREA) NEC CHAPTER 5 IS APPLICABLE FOR INTERFACING WET WELL AND THE CONTROL ENCLOSURE.

24. ALL ELECTRICAL WORK SHALL BE PERFORMED WITHIN 2014 NEC AND CITY OF TAMPA/ HILLSBOROUGH COUNTY CODES AND SHALL BE INSPECTED BY CITY OF TAMPA/ HILLSBOROUGH COUNTY ELECTRICAL INSPECTORS AS APPLICABLE.

25. ALL ELECTRICAL COMPONENTS SHALL BE UL LISTED AND AS SPECIFIED, OR AS APPROVED BY THE ENGINEER. THE PANEL BUILDER SHALL BE UL-508A CERTIFIED AND A UL LABEL SHALL BE ATTACHED TO THE INSIDE OF THE ENCLOSURE. THE DOUBLE THROW DISCONNECT MUST BE LABELED "SUITABLE FOR USE AS SERVICE EQUIPMENT."

26. THE ENCLOSURES SHALL BE NEMA 4X, THEY SHALL BE CONSTRUCTED OF MINIMUM 14 GAUGE 304SS, THEY SHALL HAVE RAL 9003 WHITE POWDER COAT AND THE CLOSING SURFACES SHALL HAVE ROLLED LIPS, PROVIDE HINGED DOORS WITH 3-POINT LATCHED AND LOCKABLE HANDLES.

27. ALL COMPONENTS TO BE MOUNTED ON PANEL USING TAPPED HOLES.

28. ALL CONTROL WIRING SHALL BE STRANDED XHHW-2 COPPER, MINIMUM AWG #14 AND SHALL HAVE SPADE LUG TERMINATIONS.

29. ALARM FLOAT SWITCH WILL BE SUPPLIED BY THE CITY, BUT INSTALLED BY CONTRACTOR.

30. DIMENSIONS, ITEMS, OR ELEVATIONS MARKED "*" TO BE DETERMINED AFTER EQUIPMENT SELECTION.

31. ALL MECHANICAL CONNECTORS SHALL BE TORQUED PER NEC, UL OR MANUFACTURES SPECIFICATIONS.

32. INSTALL LAMINATED SCHEMATIC, LAMINATED DATA SHEET AND LAMINATED SOFT STARTER SETUP PARAMETERS ON BACK FACE OF THE DOOR INSIDE THE ENCLOSURE.

33. ENSURE THAT LINE CONNECTIONS TO METER SOCKET PROVIDE CORRECT MOTOR ROTATION.

34. CONDUCTORS WITHIN THE ENCLOSURE AND NOT ROUTED IN WIREWAYS, SHALL BE SECURED TO THE BACK PANEL WITH MECHANICAL FASTENERS, FASTENERS SECURED WITH ADHESIVE ARE NOT ACCEPTABLE.

35. ALL HINGED SURFACES SHALL BE GROUNDED WITH A BONDING JUMPER SECURED TO THE ENCLOSURE OR BACKPANEL.

36. THE PCSR SHALL BE MOTOROLA ACE 3600 PACKAGE AS DISTRIBUTED BY DCR ENGINEERING SERVICES INC., OR REVERE CONTROL SYSTEMS. THE PUMPING STATION CONTRACTOR SHALL COORDINATE HIS EFFORTS WITH DCR, OR REVERE CONTROL SYSTEMS TO ENSURE SYSTEM COMPATIBILITY. THE CONTRACTOR SHALL PROVIDE AND INSTALL A COMPLETE DUPLEX CONTROL SYSTEM/SCADA PACKAGE, AS PROGRAMMED BY DCR, OR REVERE CONTROLS – THE EXISTING PUMPING STATION DCR CONTROLS SHALL REVERT TO THE CITY AS A SPARE.

37. A WET WELL LEVEL DETECTION SYSTEM SHALL BE PROVIDED AND INSTALLED BY THE CONTRACTOR. THE OUTPUT SHALL BE A LINEAR 4-20mA SIGNAL WITH RANGE AND CALIBRATION SUITABLE FOR THIS APPLICATION. THE SYSTEM SHALL BE OF THE ULTRASONIC TYPE-PULSAR, INC. MODEL dB10 W/ BLACKBOX 130 TRANSMITTER. CITY INSTRUMENTATION PERSONNEL WILL ASSIST THE CONTRACTOR WITH SPECIFYING THE TRANSDUCER MOUNTING LOCATION AND CALIBRATION. THE dB10 TRANSDUCER SHALL BE MOUNTED USING A 2 1/2" x 1/4" S.S. BRACKET, SEE dB10 MOUNTING BRACKET DETAIL, SHEET E18.

38. PROVIDE 1/4" MINIMUM THICKNESS LEXAN SHIELDS OVER POWER DISTRIBUTION BLOCK AND OTHER EXPOSED CABLE TERMINATIONS.

39. XHHW-2 CONDUCTORS (3-#10 AWG + 1-#10 AWG GND. CU FOR EACH MOTOR) SHALL EXTEND FROM THE CONTROL PANEL TO ASSOCIATED HIGH VOLTAGE JUNCTION BOX. PROVIDE SEAL-OFF BETWEEN CONTROL PANEL AND JUNCTION BOX AS INDICATED. THE SHOWN SEAL-OFFS SHALL BE ALUMINUM BODY, CROUSE-HINDS, OR EQUIVALENT.

40. ALUMINUM CONDUIT SURFACE THAT IS A CONTACT WITH SOIL OR CONCRETE SHALL BE COATED WITH TWO COATS ASPALT VARNISH (FED. SPEC. TT-V-51) EXTENDING 4" BEYOND FINAL CONTACT POINT.

41. STAINLESS STEEL HANGERS TO SUPPORT THE EXCESS LENGTH OF MOTOR CABLES SHALL BE INSTALLED IN THE WET WELL. THESE HANGERS SHALL BE LOCATED IN A SEPARATE AREA FROM THE HANGERS SUPPORTING THE PUMP CHAINS.

SCOPE OF WORK:

1. THE CONTRACTOR SHALL COORDINATE ELECTRICAL SERVICE REQUIREMENTS WITH TAMPA ELECTRIC COMPANY (TECO). THE CITY WILL MAKE PRELIMINARY ARRANGEMENTS WITH TECO AND COMPENSATE THE UTILITY DIRECTLY FOR ANY CONTRIBUTION IN AID OF CONSTRUCTION (CIAC) REQUIRED FOR TECO TO INSTALL A HANDHOLE AT THE BASE OF THE EXISTING TECO POLE. THE PROPOSED SERVICE VOLTAGE SHALL REMAIN 120/240 VAC, 3PH, 4W, DELTA AT CORDELIA PS.

2. REMOVE THE EXISTING METER SOCKET, LIGHTNING ARRESTOR, AND ALL ASSOCIATED CONDUIT AND CONDUCTORS, AS SHOWN ON PLANS.

3. NEW DCR SCADA RTU CABINET, ANTENNA, AND MAST ARE TO BE PROVIDED AND INSTALLED.

4. ANY SALVAGEABLE MATERIALS, AS DETERMINED BY THE ENGINEER, SHALL BE DELIVERED, BY THE CONTRACTOR, TO THE HOWARD F. CURREN AWTP. THE CONTRACTOR SHALL PROPERLY DISPOSE OF ALL OTHER REMOVED EQUIPMENT.

5. PROVIDE AND INSTALL A NEW ELECTRICAL METER SOCKET, LIGHTNING ARRESTOR AND GROUNDING, AS SHOWN ON PLANS.

6. PREPARE THE SITE FOR THE INSTALLATION OF THE PROPOSED CONTROL EQUIPMENT.

7. PROVIDE AND INSTALL A NEW DUPLEX PUMP CONTROL PANEL. THE PUMP CONTROL PANEL SHALL CONTAIN CONTROL COMPONENTS, INDICATOR LIGHTS, AND SCADA RTU, AS SHOWN ON PLANS AND DETAILED IN SPECIFICATIONS.

8. PROVIDE AND INSTALL A WET WELL ISOLATION JUNCTION BOX FOR PUMP MOTOR CONNECTIONS.

9. PROVIDE AND INSTALL A NEW DUPLEX MOTOR CONTROL PANEL. THE MOTOR CONTROL PANEL SHALL CONTAIN CIRCUIT BREAKERS AND MOTOR STARTERS, AS SHOWN ON PLANS AND DETAILED IN SPECIFICATIONS.

10. PROVIDE AND INSTALL WET WELL ISOLATION BOX FOR INSTRUMENTATION AND CONTROL CONNECTIONS.

11. PROVIDE AND INSTALL A NEMA 4X, SERVICE ENTRANCE RATED, FUSED DOUBLE THROW SWITCH, AS SHOWN ON PLANS.

12. PROVIDE AND INSTALL EMERGENCY POWER CONNECTOR, AS SHOWN ON PLANS.

13. PROVIDE AND INSTALL SCADA ANTENNA & MAST, AS SHOWN ON PLANS.

14. PROVIDE AND INSTALL AREA LIGHT, AS SHOWN ON PLANS.

15. CALIBRATE AND ADJUST SETPOINTS FOR ALL SENSING DEVICES, ALARM DEVICES, AND TIMERS. CALIBRATION AND SETPOINTS SHALL BE PROVIDED IN ACCORDANCE WITH MANUFACTURER'S RECOMMENDATIONS.

16. FURNISH AND INSTALL NEMA 4X JUNCTION BOXES, AS SHOWN ON PLANS.

17. PROVIDE FOR PROPER GROUNDING AS SHOWN, SPECIFIED, AND REQUIRED.

18. PROVIDE AND INSTALL ALL NECESSARY CONDUITS AND CONDUCTORS, AS SHOWN, SPECIFIED AND REQUIRED.

19. ALL ELECTRICAL WORK SHALL BE PERFORMED IN ACCORDANCE WITH THE 2014 EDITION OF THE NATIONAL ELECTRIC CODE AND CHAPTER 5 OF THE CITY OF TAMPA CODE.

20. REFER TO CIVIL/MECHANICAL SHEETS FOR BYPASS PUMPING REQUIREMENTS. IF ELECTRICALLY DRIVEN BYPASS PUMPS ARE UTILIZED, THE CONTRACTOR SHALL COORDINATE ALL TEMPORARY ELECTRICAL SERVICE REQUIREMENTS WITH TAMPA ELECTRIC COMPANY (TECO). ANY COSTS ASSOCIATED WITH TEMPORARY ELECTRIC POWER ARE TO BE INCLUDED IN THE LUMP SUM PRICE AND NO SEPERATE PAYMENT WILL BE MADE.

PROJECT MANAGER:John Pacifici
C:\PW_WORK2\D0861421\EDG-PLTS-GENERAL NOTES & SCOPE OF WORK CORDELIA.DWG - E3 - PLOTTED 11/20/2018 2:58 PM BY STARK, THOMAS
FIELD BOOK INFORMATION-

REV#	DATE	DESCRIPTION	BY

ALAN M. SCHWAB, P.E.
FLORIDA LICENSE NO. 61313

WADE TRIM
201 North Franklin Street, Suite 1350
Tampa, FL 33602
813.882.4373
www.wadetrim.com
Certificate of Authorization No.: 3952

CITY OF TAMPA, FLORIDA
CORDELIA PUMP STATION
REHABILITATION

GENERAL NOTES AND SCOPE OF WORK

ISSUED FOR:	DATE:	BY:
90% PLANS	7-16-18	RGB
100% PLANS	11-20-18	RGB

JOB NO. TPA2007-01M

SHEET E3

Cordelia PS Rehabilitation

© Wade Trim Group, Inc.

THIS SHEET HAS BEEN LEFT INTENTIONALLY BLANK.

PROJECT MANAGER: John Pacifici
C:\PW_WORK2\D0861421\EDC-PLTS-CORDELIA STREET BLANK PAGE E4.DWG - E4 - PLOTTED 11/20/2018 2:59 PM BY STARK, THOMAS
FIELD BOOK INFORMATION:-

REV#	DATE	DESCRIPTION	BY

ALAN M. SCHWAB, P.E.
FLORIDA LICENSE NO. 61313

WADE TRIM
201 North Franklin Street, Suite 1350
Tampa, FL 33602
813.882.4373
www.wadetrim.com
Certificate of Authorization No.: 3952

CITY OF TAMPA, FLORIDA
CORDELIA PUMP STATION
REHABILITATION

CORDELIA STREET PUMP STATION
BLANK SHEET

ISSUED FOR:	DATE:	BY:
90% PLANS	7-16-18	RGB
100% PLANS	11-20-18	RGB

JOB NO.
TPA2007-01M

SHEET
E4

© Wade Trim Group, Inc.

Cordelia PS Rehabilitation

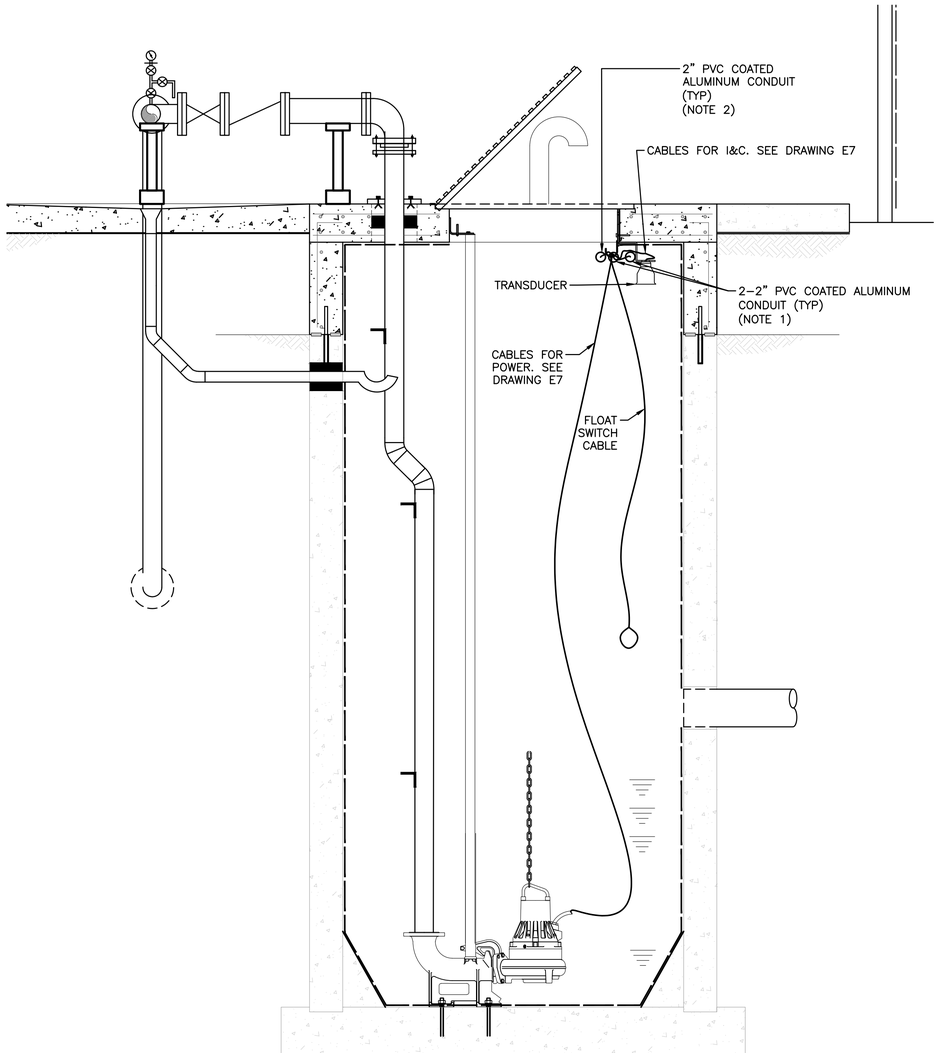

SIDE VIEW PUMP STATION: ELECTRICAL SITE PLAN

SCALE: ¾" = 1'

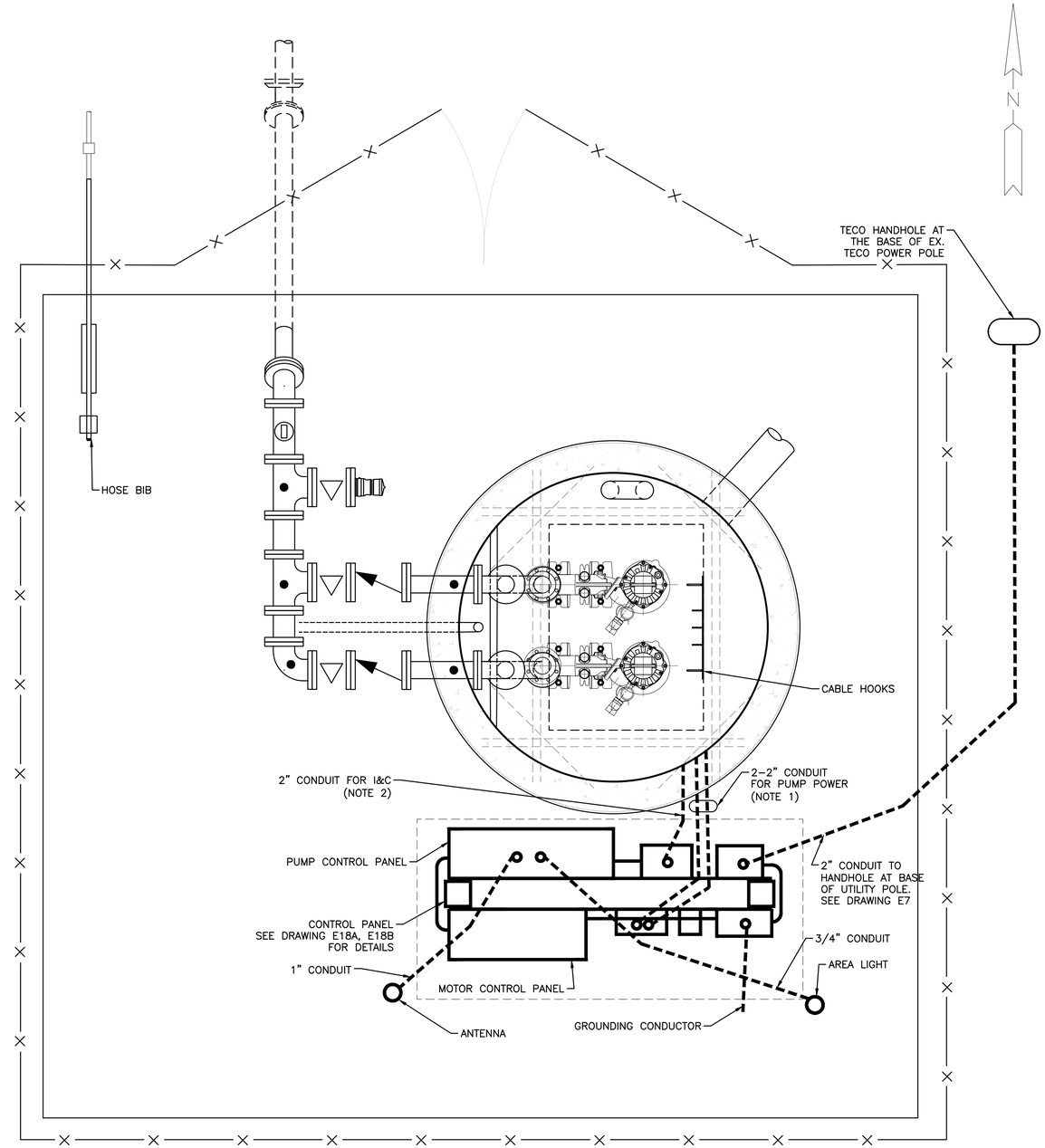

PUMP STATION: ELECTRICAL SITE PLAN

SCALE: ¾" = 1'

NOTES:

1. PROPOSED 2" PVC COATED ALUMINUM CONDUITS FOR MOTOR CONDUCTORS. CORE DRILL WET WELL WALL AS REQUIRED TO INSTALL CONDUIT USING LINK-SEALS. LINK-SEALS SHALL BE PROVIDED WITH 316 STAINLESS STEEL BOLTS AND NUTS.
2. PROPOSED 2" PVC COATED ALUMINUM CONDUIT FOR I&C CONDUCTORS. INSTALL CONDUIT AS DESCRIBED IN NOTE 1.

PROJECT MANAGER: John Pacifici
C:\PW_WORK2\00861421\EDC-PLTS-CORDELIA STREET SITE PLAN.DWG - E5 - PLOTTED 11/20/2018 2:59 PM BY STARK, THOMAS
FIELD BOOK INFORMATION:-

REV#	DATE	DESCRIPTION	BY

ALAN M. SCHWAB, P.E.
FLORIDA LICENSE NO. 61313

WADE TRIM
201 North Franklin Street, Suite 1350
Tampa, FL 33602
813.882.4373
www.wadetrim.com
Certificate of Authorization No.: 3952

CITY OF TAMPA, FLORIDA
CORDELIA PUMP STATION
REHABILITATION

CORDELIA STREET PUMP STATION
SITE PLAN

ISSUED FOR: DATE: BY:
90% PLANS 7-16-18 RGB
100% PLANS 11-20-18 RGB

JOB NO.
TPA2007-01M

SHEET
E5

Cordelia PS Rehabilitation

© Wade Trim Group, Inc.

THIS SHEET HAS BEEN LEFT INTENTIONALLY BLANK.

PROJECT MANAGER: John Pacifici
C:\PW_WORK2\D0861421\EDG-PLTS-CORDELIA STREET BLANK PAGE E6.DWG - E6 - PLOTTED 11/20/2018 3:00 PM BY STARK, THOMAS
FIELD BOOK INFORMATION:-

REV#	DATE	DESCRIPTION	BY

ALAN M. SCHWAB, P.E.
FLORIDA LICENSE NO. 61313

WADE TRIM

201 North Franklin Street, Suite 1350
Tampa, FL 33602
813.882.4373
www.wadetrim.com
Certificate of Authorization No.: 3952

CITY OF TAMPA, FLORIDA
CORDELIA PUMP STATION
REHABILITATION

CORDELIA STREET PUMP STATION
BLANK SHEET

ISSUED FOR:	DATE:	BY:
90% PLANS	7-16-18	RGB
100% PLANS	11-20-18	RGB

JOB NO.
TPA2007-01M

SHEET
E6

© Wade Trim Group, Inc.

Cordelia PS Rehabilitation

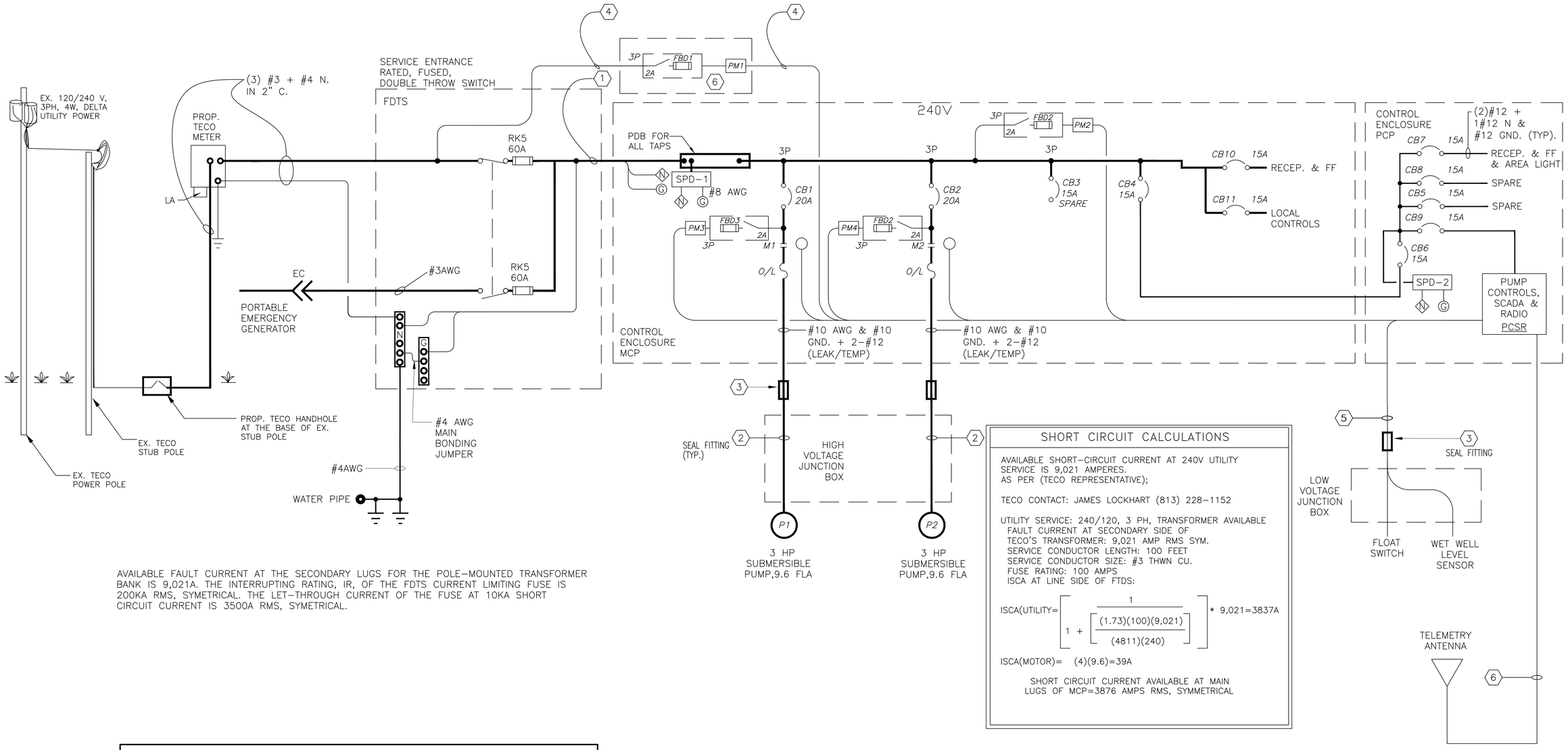

AVAILABLE FAULT CURRENT AT THE SECONDARY LUGS FOR THE POLE-MOUNTED TRANSFORMER BANK IS 9,021A. THE INTERRUPTING RATING, IR, OF THE FDTS CURRENT LIMITING FUSE IS 200KA RMS, SYMETRICAL. THE LET-THROUGH CURRENT OF THE FUSE AT 10KA SHORT CIRCUIT CURRENT IS 3500A RMS, SYMETRICAL.

SHORT CIRCUIT CALCULATIONS

AVAILABLE SHORT-CIRCUIT CURRENT AT 240V UTILITY SERVICE IS 9,021 AMPERES.
AS PER (TECO REPRESENTATIVE);

TECO CONTACT: JAMES LOCKHART (813) 228-1152

UTILITY SERVICE: 240/120, 3 PH, TRANSFORMER AVAILABLE
FAULT CURRENT AT SECONDARY SIDE OF
TECO'S TRANSFORMER: 9,021 AMP RMS SYM.
SERVICE CONDUCTOR LENGTH: 100 FEET
SERVICE CONDUCTOR SIZE: #3 THWN CU.
FUSE RATING: 100 AMPS
ISCA AT LINE SIDE OF FTDS:

$$ISCA(UTILITY) = \left[\frac{1}{1 + \left[\frac{(1.73)(100)(9{,}021)}{(4811)(240)} \right]} \right] * 9{,}021 = 3837A$$

ISCA(MOTOR)= (4)(9.6)=39A

SHORT CIRCUIT CURRENT AVAILABLE AT MAIN LUGS OF MCP=3876 AMPS RMS, SYMMETRICAL

ELECTRICAL SERVICE LOAD SUMMARY

240 VAC, 3ø, 4W

LOAD	CONNECTED	DEMAND	APPROX. PHASE CURRENTS L1	L2	L3
PUMP #1	4.0 KVA	4.0 KVA	9.6 A	9.6 A	9.6 A
PUMP #2	4.0 KVA	4.0 KVA	9.6 A	9.6 A	9.6 A
PUMP CONTROL PANEL	2.0 KVA	2.0 KVA	8.3 A	0 A	8.3 A
TOTAL	10 KVA	10 KVA	27.5 A	19.2 A	27.5 A

ONE LINE DIAGRAM NOTES:

1. PROVIDE AND INSTALL 3-#3 + 1-#4 NEUTRAL + 1-#4 GND IN 2"C. CONDUIT, REFER TO DETAILS ON SHEET E5, E18A & E18B.
2. PROVIDE AND INSTALL 2"C FOR SUBMERSIBLE PUMP CABLE (PROVIDE W/ PUMP)-SEE SHEET E5, E18A & E18B
3. PROVIDE SEAL FITTING, REFER TO DETAIL ON SHEET E18A.
4. PROVIDE AND INSTALL 3-#12 + 1-#12 GND. IN $\frac{3}{4}$" CONDUIT, REFER TO DETAILS ON SHEET E20.
5. PROVIDE 2" CONDUIT FROM NEW PUMP CONTROL JB CABINET TO WET WELL FOR FLOAT SWITCH AND LEVEL SENSOR CABLES. REFER TO DETAILS ON SHEET E5 & E18B.
6. PROVIDE 1" CONDUIT FROM NEW PUMP CONTROL CABINET TO EXISTING ANTENNA MAST FOR NEW COAX CABLE, REFER TO DETAIL ON SHEET E5 & E18.
7. PM1 JUNCTION BOX, SEE SHEETS E18A AND E20 FOR DETAILS.

REV#	DATE	DESCRIPTION	BY

ALAN M. SCHWAB, P.E.
FLORIDA LICENSE NO. 61313

WADE TRIM
201 North Franklin Street, Suite 1350
Tampa, FL 33602
813.882.4373
www.wadetrim.com
Certificate of Authorization No.: 3952

CITY OF TAMPA, FLORIDA
CORDELIA PUMP STATION
REHABILITATION

CORDELIA STREET PUMP STATION
ONE LINE DIAGRAM

ISSUED FOR: DATE: BY:
90% PLANS 7-16-18 RGB
100% PLANS 11-20-18 RGB

JOB NO. TPA2007-01M
SHEET E7

© Wade Trim Group, Inc.

Cordelia PS Rehabilitation

PROJECT MANAGER: John Pacifici
C:\PW_WORK2\D0861421\EDG-PLTS-ONE LINE DIAGRAM-CORDELIA.DWG - E7 - PLOTTED 11/20/2018 3:01 PM BY STARK, THOMAS
FIELD BOOK INFORMATION:-

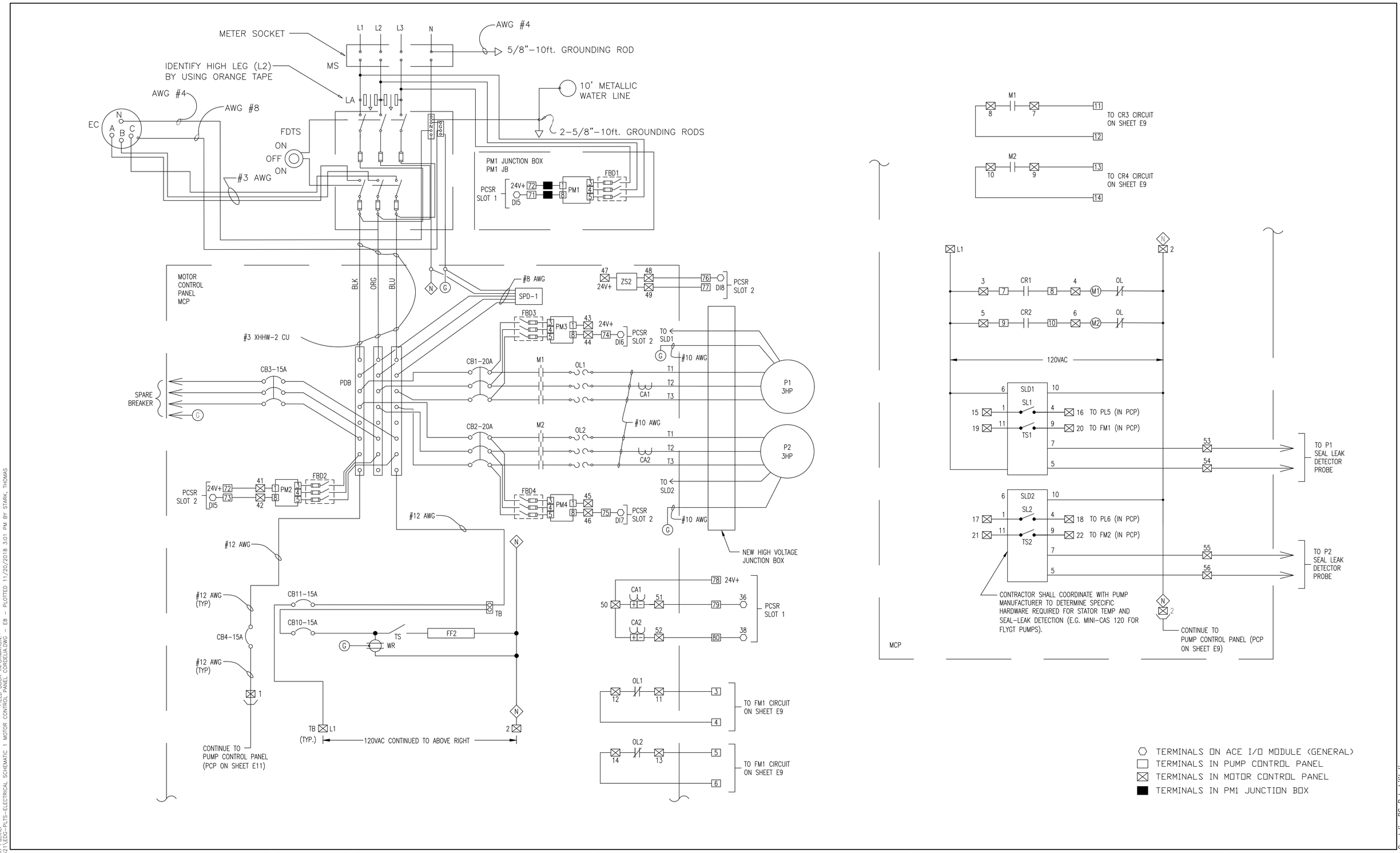

REV#	DATE	DESCRIPTION	BY

ALAN M. SCHWAB, P.E.
FLORIDA LICENSE NO. 61313

WADE TRIM
201 North Franklin Street, Suite 1350
Tampa, FL 33602
813.882.4373
www.wadetrim.com
Certificate of Authorization No.: 3952

CITY OF TAMPA, FLORIDA
CORDELIA PUMP STATION
REHABILITATION

ELECTRICAL SCHEMATIC (1 OF 4)
MOTOR CONTROL PANEL

ISSUED FOR:	DATE:	BY:
90% PLANS	7-16-18	RGB
100% PLANS	11-20-18	RGB

JOB NO. TPA2007-01M

SHEET E8

© Wade Trim Group, Inc.

Cordelia PS Rehabilitation

PROJECT MANAGER:John Pacifici
C:\PW_WORK2\0086142\EDG-PLTS-ELECTRICAL SCHEMATIC 1 MOTOR CONTROL PANEL CORDELIA.DWG - E8 - PLOTTED 11/20/2018 3:01 PM BY STARK, THOMAS
FIELD BOOK INFORMATION:-

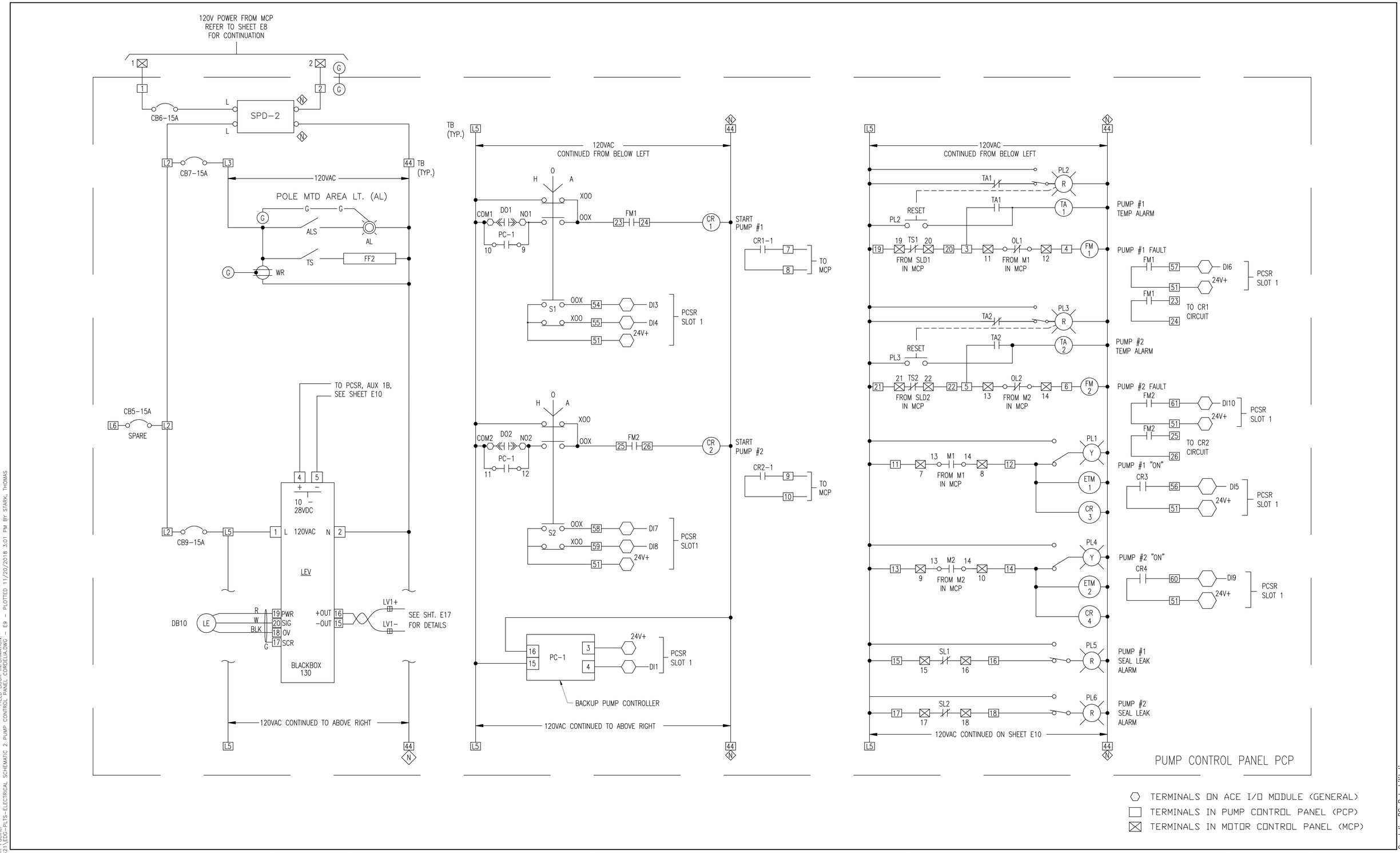

PROJECT MANAGER: John Pacifici
C:\PW_WORK2\D0861421\EDG-PLTS-ELECTRICAL SCHEMATIC 2 PUMP CONTROL PANEL CORDELIA.DWG – E9 – PLOTTED 11/20/2018 3:01 PM BY STARK, THOMAS
FIELD BOOK INFORMATION:–

REV#	DATE	DESCRIPTION	BY

ALAN M. SCHWAB, P.E.
FLORIDA LICENSE NO. 61313

WADE TRIM
201 North Franklin Street, Suite 1350
Tampa, FL 33602
813.882.4373
www.wadetrim.com
Certificate of Authorization No.: 3952

CITY OF TAMPA, FLORIDA
CORDELIA PUMP STATION
REHABILITATION

ELECTRICAL SCHEMATIC (2 OF 4)
PUMP CONTROL PANEL

ISSUED FOR:	DATE:	BY:
90% PLANS	7-16-18	RGB
100% PLANS	11-20-18	RGB

JOB NO. TPA2007-01M

SHEET E9

Cordelia PS Rehabilitation

© Wade Trim Group, Inc.

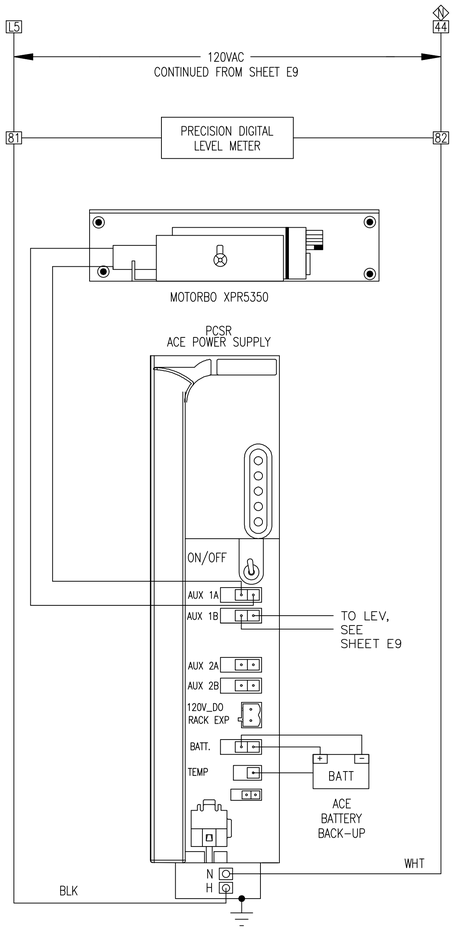

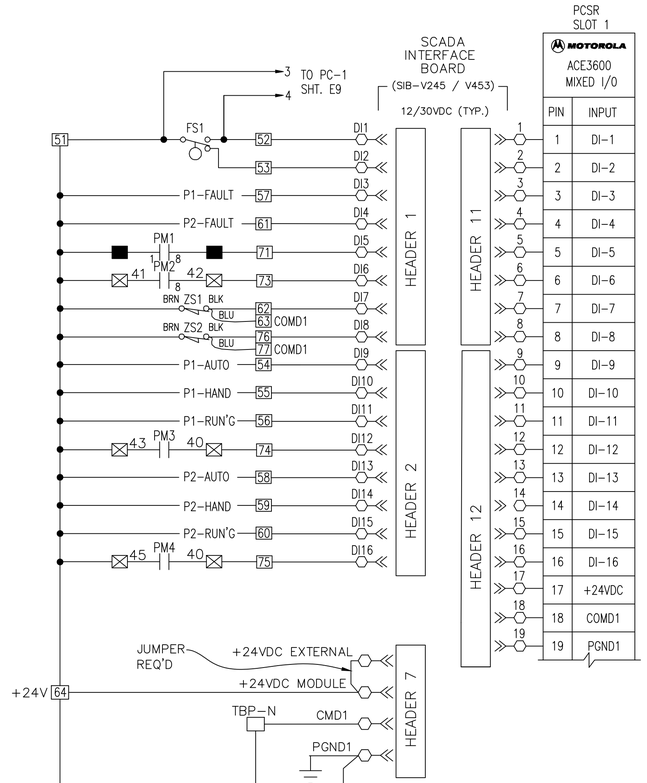

PCSR SLOT 1

MOTOROLA ACE3600 MIXED I/O

PIN	INPUT	
1	DI-1	WET WELL HIGH
2	DI-2	WET WELL NOT HIGH
3	DI-3	PUMP 1 FAULT
4	DI-4	PUMP 2 FAULT
5	DI-5	UTILITY POWER AVAILABLE (PM1) TO PCSR
6	DI-6	MOTOR CONTROL PANEL PHASE LOSS (PM2) TO PCSR
7	DI-7	PUMP CONTROL PANEL INTRUSION
8	DI-8	MOTOT CONTROL PANEL INTRUSION TO PCSR
9	DI-9	PUMP 1 SS IN AUTO
10	DI-10	PUMP 1 SS IN HAND
11	DI-11	PUMP 1 RUNNING
12	DI-12	PUMP 1 MCP STATUS (PM3) TO PCSR
13	DI-13	PUMP 2 SS IN AUTO
14	DI-14	PUMP 2 SS IN HAND
15	DI-15	PUMP 2 RUNNING
16	DI-16	PUMP 2 MCP STATUS (PM4) TO PCSR
17	+24VDC	
18	COMD1	
19	PGND1	

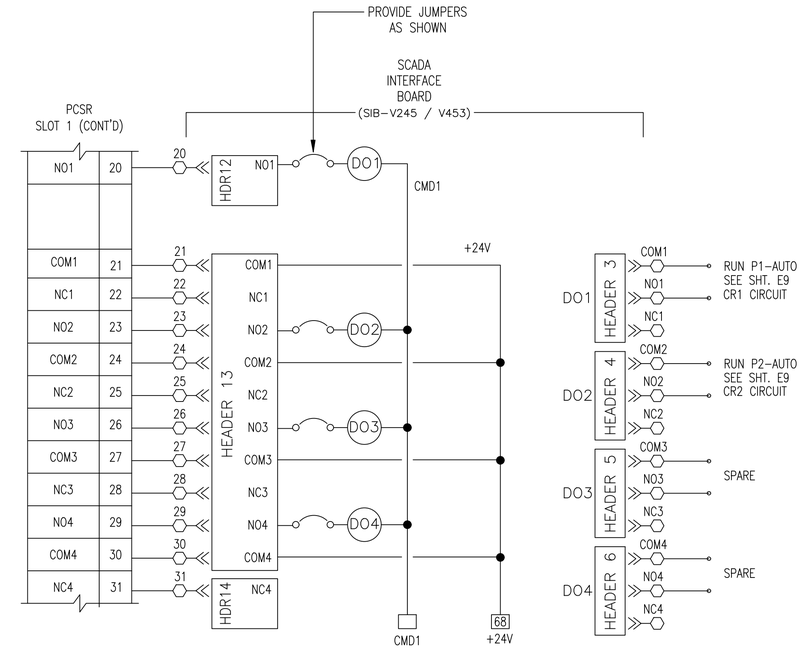

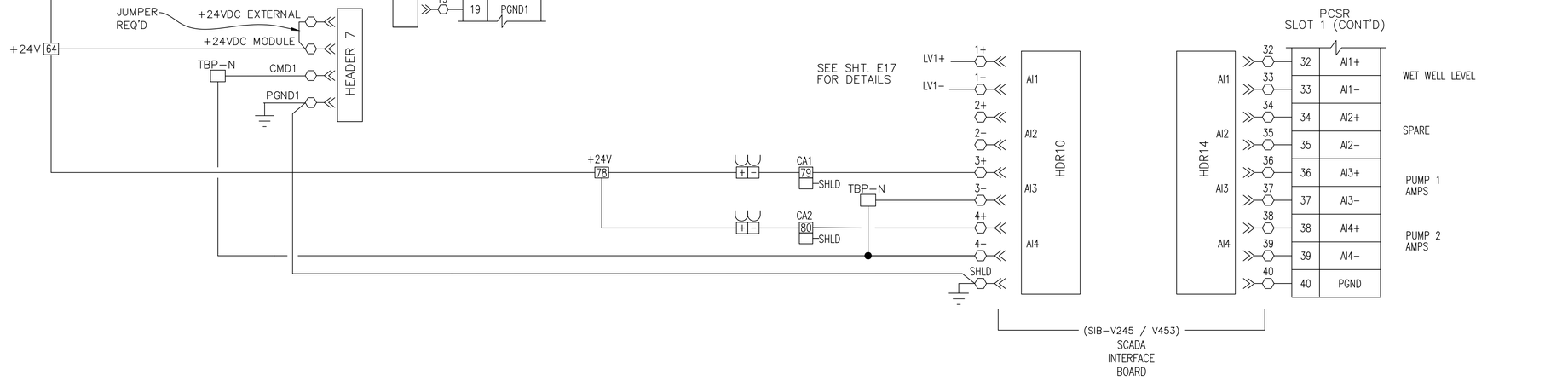

- TERMINALS ON ACE I/O MODULE (GENERAL)
- TERMINALS IN PUMP CONTROL PANEL
- TERMINALS IN MOTOR CONTROL PANEL
- TERMINALS IN PM1 DISCONNECT ENCLOSURE

PROJECT MANAGER: John Pacifici
C:\PW_WORK2\D0861421\EDG-PLTS-ELECTRICAL SCHEMATIC 3 MOTOR CONTROL PANEL CORDELIA.DWG - E10 - PLOTTED 11/20/2018 3:02 PM BY STARK, THOMAS
FIELD BOOK INFORMATION:-

REV#	DATE	DESCRIPTION	BY

ALAN M. SCHWAB, P.E.
FLORIDA LICENSE NO. 61313

WADE TRIM
201 North Franklin Street, Suite 1350
Tampa, FL 33602
813.882.4373
www.wadetrim.com
Certificate of Authorization No.: 3952

CITY OF TAMPA, FLORIDA
CORDELIA PUMP STATION
REHABILITATION

ELECTRICAL SCHEMATIC (3 OF 4)
MOTOR CONTROL PANEL

ISSUED FOR: DATE: BY:
90% PLANS 7-16-18 RGB
100% PLANS 11-20-18 RGB

JOB NO. TPA2007-01M

SHEET E10

Cordelia PS Rehabilitation

© Wade Trim Group, Inc.

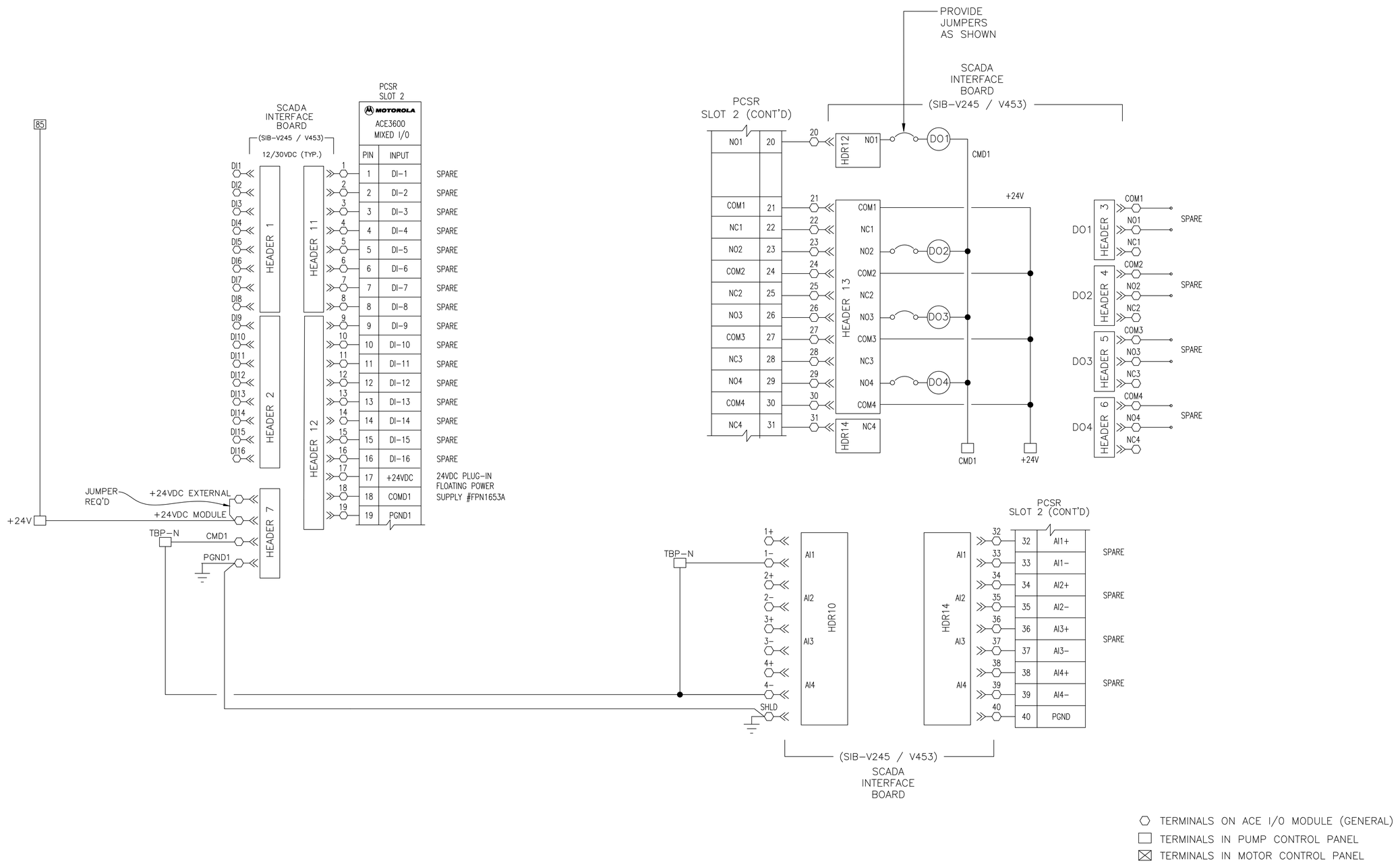

PROJECT MANAGER:John Pacifici
C:\PW_WORK2\D0861421\EDG-PLTS-ELECTRICAL SCHEMATIC 4 MOTOR CONTROL PANEL CORDELIA.DWG - E10A - PLOTTED 11/20/2018 3:02 PM BY STARK, THOMAS
FIELD BOOK INFORMATION:-

REV#	DATE	DESCRIPTION	BY

ALAN M. SCHWAB, P.E.
FLORIDA LICENSE NO. 61313

WADE TRIM
201 North Franklin Street, Suite 1350
Tampa, FL 33602
813.882.4373
www.wadetrim.com
Certificate of Authorization No.: 3952

CITY OF TAMPA, FLORIDA
CORDELIA PUMP STATION
REHABILITATION

ELECTRICAL SCHEMATIC (4 OF 4)
MOTOR CONTROL PANEL

ISSUED FOR: DATE: BY:
90% PLANS 7-16-18 RGB
100% PLANS 11-20-18 RGB

JOB NO. TPA2007-01M
SHEET E10A

Cordelia PS Rehabilitation

© Wade Trim Group, Inc.

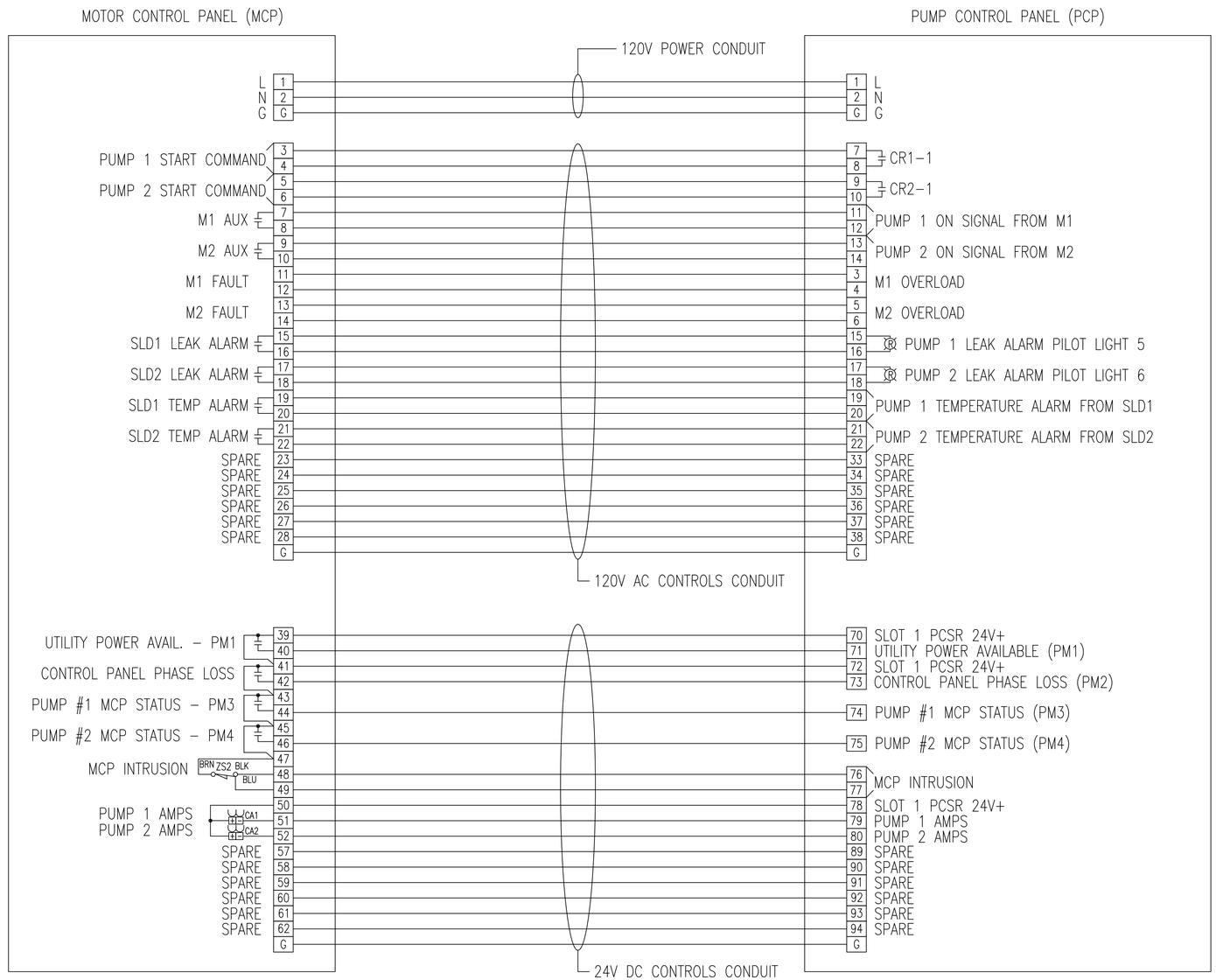

FIELD BOOK INFORMATION:-
C:\PW_WORK2\D0861421\EDG-PLTS-MCP TO PCP INTERCONNECTION WIRING DIAGRAM CORDELIA.DWG - E11 - PLOTTED 11/20/2018 3:02 PM BY STARK, THOMAS

PROJECT MANAGER: John Pacifici

REV#	DATE	DESCRIPTION	BY

ALAN M. SCHWAB, P.E.
FLORIDA LICENSE NO. 61313

WADE TRIM
201 North Franklin Street, Suite 1350
Tampa, FL 33602
813.882.4373
www.wadetrim.com
Certificate of Authorization No.: 3952

CITY OF TAMPA, FLORIDA
CORDELIA PUMP STATION
REHABILITATION

MCP TO PCP INTERCONNECTION
WIRING DIAGRAM

ISSUED FOR: DATE: BY:
90% PLANS 7-16-18 RGB
100% PLANS 11-20-18 RGB

JOB NO. TPA2007-01M

SHEET E11

© Wade Trim Group, Inc.

Cordelia PS Rehabilitation

TB1 (▭) (120V AC) MOUNTED ON PUMP CONTROL PANEL (PCP)

TERM.	DESCRIPTION
1	120V FROM MOTOR CONTROL PANEL
2	NEUTRAL FROM MOTOR CONTROL PANEL
3	M1 OVERLOAD
4	M1 OVERLOAD
5	M2 OVERLOAD
6	M2 OVERLOAD
7	PUMP 1 START COMMAND TO M1 (IN MCP)
8	PUMP 1 START COMMAND TO M1 (IN MCP)
9	PUMP 2 START COMMAND TO M2 (IN MCP)
10	PUMP 2 START COMMAND TO M2 (IN MCP)
11	P1 "ON" SIGNAL FROM M1 (IN MCP)
12	P1 "ON" SIGNAL FROM M1 (IN MCP)
13	P2 "ON" SIGNAL FROM M2 (IN MCP)
14	P2 "ON" SIGNAL FROM M2 (IN MCP)
15	PUMP 1 LEAK ALARM FROM MCP
16	PUMP 1 LEAK ALARM FROM MCP
17	PUMP 2 LEAK ALARM FROM MCP
18	PUMP 2 LEAK ALARM FROM MCP
19	PUMP 1 TEMPERATURE ALARM FROM MCP
20	PUMP 1 TEMPERATURE ALARM FROM MCP
21	PUMP 2 TEMPERATURE ALARM FROM MCP
22	PUMP 2 TEMPERATURE ALARM FROM MCP
23	PUMP 1 FAULT RELAY CONTACT
24	PUMP 1 FAULT RELAY CONTACT
25	PUMP 2 FAULT RELAY CONTACT
26	PUMP 2 FAULT RELAY CONTACT
27	SPARE
28	SPARE
29	SPARE
30	SPARE
31-43	SPARE

TB1 CONTINUED

44	SPD-2 NUETRAL OUT
L1	SPD-2 NUETRAL OUT
L2	MAIN BREAKER CB6
L3	CB7 OUT
L4	SPARE CB8 BREAKER
L5	CB9 OUT
L6	SPARE CB5 BREAKER

TB2 (▭) (24V DC) MOUNTED ON PUMP CONTROL PANEL (PCP)

TERM.	DESCRIPTION
51	SLOT 1 PCSR 24V+
52	WET WELL HIGH
53	WET WELL NOT HIGH
54	PUMP 1 "AUTO" TO PCSR
55	PUMP 1 "HAND" TO PCSR
56	PUMP 1 "ON" TO PCSR
57	PUMP 1 "FAULT" TO PCSR
58	PUMP 2 "AUTO" TO PCSR
59	PUMP 2 "HAND" TO PCSR
60	PUMP 2 "ON" TO PCSR
61	PUMP 2 "FAULT" TO PCSR
62	PUMP CONTROL PANEL INTRUSION
63	
64	SLOT 1 PCSR 24V+
65	SPARE
66	SLOT 1 PCSR 24V+
67	SPARE
68	SLOT 1 PCSR 24V+
69	SPARE
70	SLOT 1 PCSR 24V+
71	UTIL POWER AVAILABLE (PM1) TO PCSR
72	SLOT 1 PCSR 24V+
73	MOTOR CONTROL PANEL PHASE LOSS (PM2)
74	PUMP #1 MCP STATUS (PM3) TO PCSR
75	PUMP #2 MCP STATUS (PM4) TO PCSR
76	MOTOR CONTROL PANEL INTRUSION
77	
78	SLOT 1 PCSR 24V+
79	PUMP 1 AMPS
80	PUMP 2 AMPS
81	PROCESS METER FOR LEVEL 120V-POWER
82	PROCESS METER FOR LEVEL 120V-NEUTRAL
83	SPARE SLOT 1 TERMINALS
84	SPARE SLOT 1 TERMINALS

TB1 CONTINUED

85	SLOT 2 PCSR 24V+
86	SLOT 2 PCSR 24V+
87	SLOT 2 PCSR 24V+
88-100	SPARE SLOT 2 TERMINALS

X-Y	TERMINAL POINT MOUNTED ON PCP (INTERFACE TO PCSR)
○	TERMINAL POINT ON PCSR
▭	TERMINAL POINT IN PUMP CONTROL PANEL (PCP)
⊠	TERMINAL POINT IN MOTOR CONTROL PANEL (MCP)

CONTROL SCHEMATIC SYMBOLS

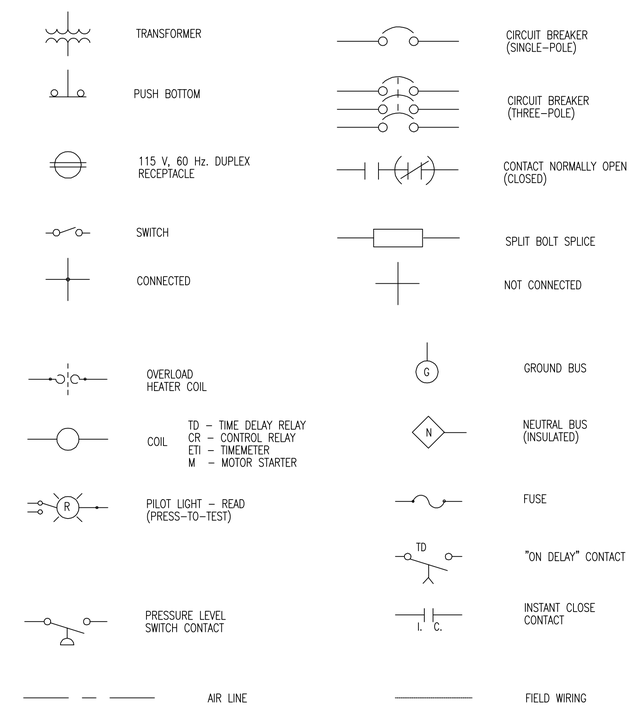

PROJECT MANAGER: John Pacifici
C:\PW_WORK2\D0861421\EDG-PLTS-ELECTRICAL SCHEMATIC LEGEND 1 CORDELIA.DWG - E12 - PLOTTED 11/20/2018 3:03 PM BY STARK, THOMAS
FIELD BOOK INFORMATION:-

REV#	DATE	DESCRIPTION	BY

ALAN M. SCHWAB, P.E.
FLORIDA LICENSE NO. 61313

WADE TRIM
201 North Franklin Street, Suite 1350
Tampa, FL 33602
813.882.4373
www.wadetrim.com
Certificate of Authorization No.: 3952

CITY OF TAMPA, FLORIDA
CORDELIA PUMP STATION
REHABILITATION

ELECTRICAL SCHEMATIC LEGEND
(SHT. 1 OF 2)

ISSUED FOR:	DATE:	BY:
90% PLANS	7-16-18	RGB
100% PLANS	11-20-18	RGB

JOB NO. TPA2007-01M
SHEET E12

Cordelia PS Rehabilitation

© Wade Trim Group, Inc.

TB3 (⊠) (120V AC) MOUNTED ON MOTOR CONTROL PANEL (MCP)	
TERM.	DESCRIPTION
1	120V TO PUMP CONTROL PANEL
2	NEUTRAL (CONTINUED TO PUMP CONTROL PANEL)
3	PUMP 1 START COMMAND FROM CR1-1 (IN PCP)
4	PUMP 1 START COMMAND FROM CR1-1 (IN PCP)
5	PUMP 2 START COMMAND FROM CR2-1 (IN PCP)
6	PUMP 2 START COMMAND FROM CR2-1 (IN PCP)
7	PUMP 1 'ON' SIGNAL TO CR3 (IN PCP)
8	PUMP 1 'ON' SIGNAL TO CR3 (IN PCP)
9	PUMP 2 'ON' SIGNAL TO CR4 (IN PCP)
10	PUMP 2 'ON' SIGNAL TO CR4 (IN PCP)
11	M1 FAULT SIGNAL TO PCP
12	M1 FAULT SIGNAL TO PCP
13	M2 FAULT SIGNAL TO PCP
14	M2 FAULT SIGNAL TO PCP
15	PUMP 1 LEAK DETECTED TO PILOT LIGHT 5 (IN PCP)
16	PUMP 1 LEAK DETECTED TO PILOT LIGHT 5 (IN PCP)
17	PUMP 2 LEAK DETECTED TO PILOT LIGHT 6 (IN PCP)
18	PUMP 2 LEAK DETECTED TO PILOT LIGHT 6 (IN PCP)
19	PUMP 1 TEMPERATURE ALARM TO FM1 (IN PCP)
20	PUMP 1 TEMPERATURE ALARM TO FM1 (IN PCP)
21	PUMP 2 TEMPERATURE ALARM TO FM2 (IN PCP)
22	PUMP 2 TEMPERATURE ALARM TO FM2 (IN PCP)
23-37	SPARE
L1	CB11 OUT MOTOR CONTROL PANEL POWER

TB4 (⊠) (24V DC) MOUNTED ON MOTOR CONTROL PANEL (MCP)	
TERM.	DESCRIPTION
39	SPARE
40	SPARE
41	SLOT 1 PCSR 24V+
42	MOTOR CONTROL PANEL PHASE LOSS (PM2) TO PCSR
43	SLOT 1 PCSR 24V+
44	PUMP #1 MCP STATUS PHASE LOSS (PM3) TO PCSR
45	SLOT 1 PCSR 24V+
46	PUMP #2 MCP STATUS PHASE LOSS (PM4) TO PCSR
47	SLOT 1 PCSR 24V+
48	MOTOR CONTROL PANEL INTRUSION
49	
50	SLOT 1 PCSR 24V+
51	PUMP 1 AMPS
52	PUMP 2 AMPS
53	PUMP 1 SEAL LEAK DETECTOR PROBE
54	PUMP 1 SEAL LEAK DETECTOR PROBE
55	PUMP 1 SEAL LEAK DETECTOR PROBE
56	PUMP 1 SEAL LEAK DETECTOR PROBE
57-66	SPARE

X-Y
- ⊞ TERMINAL POINT MOUNTED ON PCP (INTERFACE TO PCSR)
- ○ TERMINAL POINT ON PCSR
- ▭ TERMINAL POINT IN PUMP CONTROL PANEL (PCP)
- ⊠ TERMINAL POINT IN MOTOR CONTROL PANEL (MCP)

PROJECT MANAGER: John Pacifici
C:\PW_WORK2\D0861421\EDG-PLTS-ELECTRICAL SCHEMATIC LEGEND 2 CORDELIA.DWG - E13 - PLOTTED 11/20/2018 3:03 PM BY STARK, THOMAS
FIELD BOOK INFORMATION:-

REV#	DATE	DESCRIPTION	BY

ALAN M. SCHWAB, P.E.
FLORIDA LICENSE NO. 61313

WADE TRIM
201 North Franklin Street, Suite 1350
Tampa, FL 33602
813.882.4373
www.wadetrim.com
Certificate of Authorization No.: 3952

CITY OF TAMPA, FLORIDA
CORDELIA PUMP STATION
REHABILITATION

ELECTRICAL SCHEMATIC LEGEND
(SHT. 2 OF 2)

ISSUED FOR:	DATE:	BY:
90% PLANS	7-16-18	RGB
100% PLANS	11-20-18	RGB

JOB NO. TPA2007-01M

SHEET E13

© Wade Trim Group, Inc.

Cordelia PS Rehabilitation

PARTS SCHEDULE

SYMBOL	NAME	PART				REMARKS
		MAKE	TYPE	MODEL OR CAT. #	RATING	
CB 1	CIRCUIT BREAKER	SQUARE D	THREE POLE	HDL 36020	480 V, 20A	25 KAIC @ 240VAC
CB 2	CIRCUIT BREAKER	SQUARE D	THREE POLE	HDL 36020	480 V, 20A	
CB 3	CIRCUIT BREAKER	SQUARE D	THREE POLE	HDL 36015	480 V, 15A	
CB 4, 5, 6, 7, 8, 9, 10, 11	CIRCUIT BREAKER	SQUARE D	SINGLE POLE	QOU-115	120 V, 15A	
M1, 2	MOTOR STARTER	CUTLER-HAMMER	NEMA SIZE 2	AN16GNOAB	120V (COIL)	15HP (MAX)
OL1, 2	OVERLOAD RELAY	CUTLER-HAMMER	BIMETALLIC, AMBIENT COMPENSATED	H2011B-3	9.14-14.0A	
CA1, CA2	CIRCUIT SENSOR	ENERCORP INSTRUMENTS	4-20mA OUTPUT	SC200-2	0 - 100A	ADJUSTABLE RANGE
PL1, PL4	INDICATOR LIGHT	SQUARE D	CLASS 9001	SKT - 38LYA9	120 V, LED TYPE	YELLOW LENS & PRESS TEST
PL2, PL3	INDICATOR LIGHT	SQUARE D	CLASS 9001	SKT - 38LRR9	120 V, LED TYPE	RED LENS & PRESS TEST
PL5, PL6	INDICATOR LIGHT	SQUARE D	CLASS 9001	SKT - 38LRR9	120 V, LED TYPE	RED LENS & PRESS TEST
S1, S2	HOA SWITCH ASSEMBLY	SQUARE D	OIL-TIGHT CLASS 9001	SKS - 43B H2	10A @ 120V	
ETM1, ETM2	ELAPSED TIME METER	CRAMER	ROUND BEZEL, NON RESET	635E	120 V	W.W. GRANGER CAT. NO. 6X144
ZS1, ZS2	CONTROL PNL INTRUSION SENSOR	OMRON	CYLINDRICAL, SHORT BARREL	E2F-X5F1 (GRAINGER-1EA77)	12-24VDC, 3-WIRE PNP	W/ TELEMECANIQUE MTG. BRACKET (GRAINGER - 5B233)
FF1, FF2 & TS	LED LIGHTING FIXTURE	HOFFMAN	LED	LEDA1S35	120 V, 5W	W/TOGGLE SWITCH-TS
WR1	WALL RECEPTACLE	HUBBELL	DUPLEX W/GFI	GF5262	120V AC, 15A GFI	W/ALUMINUM OUTLET BOX AND COVER
SPD-1	SURGE PROTECTIVE DEVICE TYPE 1	ADVANCED PROTECTION TECHNOLOGIES	MOTOR CONTROL PANEL SPD	TEO3XDS104X	240/120 V, 3ø, 4W	
TB1, TB2, TB3, TB4	TERMINALS	PHOENIX CONTACT		UK5N TERMINALS	30 A W/ ALUM. DIN RAIL	50 CONTACTS (MIN)
ITS	INSULATED TERMINAL STRIP	ALLEN-BRADLEY	STYLE AA	1492-15-T	600 V AC NEUTRAL BLOCK	4 CONTACTS (MIN) W/ SHORTING BARS
GB1	GROUND BAR SYSTEM	PANDUIT	12 PORT WITH MAIN LUG	UGB2/0-414-12		COPPER CONSTRUCTION
GB2	GROUNDING BLOCK	ILSCO	AS REQUIRED	AS REQUIRED		
MCP	MOTOR CONTROL PANEL ENCLOSURE	HOFFMAN	NEMA 4X, 3P LATCH, 42"x30"x12"	42"x30"x12" SS	304 SS, POWDER COATED WHITE	3P LATCH W/STOP KIT. EXTERNAL FINISH DURABLE RAL 9003 WHITE POWER COAT.
MP	ENCLOSURE PANEL	HOFFMAN	39" X 27", STEEL	A42P30	STEEL, 12 GAUGE	
TA1, TA2	CONTROL RELAY	POTTER & BRUMFIELD	8 PIN PLUG-IN	KRPA-11AG-120	120V AC COIL, 10A CONTACTS	DPDT W/ SOCKET AND HOLD DOWN SPRING
FM1, FM2	CONTROL RELAY	POTTER & BRUMFIELD	11 PIN PLUG-IN	KRPA-14AG-120	120V AC COIL, 10A CONTACTS	3PDT W/ SOCKET AND HOLD DOWN SPRING
LEV	WET WELL LEVEL SENSOR	PULSAR, INC.	ULTRASONIC	dB10 TRANSDUCER W/ BLACKBOX 130 TRANSMITTER PART #: 130-110-300-00P-KP-TROP	1 TO 32.8 FT RANGE 115VAC/24VDC POWERED W/ 4-20MA AND (2) RELAY OUT W/ KEY PAD, DISPLAY, AND TROPICALIZATION	CITY FORCES WILL PROVIDE ASSISTANCE WITH MOUNTING AND CALIBRATION
CR1, CR2	CONTROL RELAY	POTTER & BRUMFIELD	14-BLADE SQUARE PLUG-IN	KUP-L7A19-120	120V AC COIL, 10A CONTACTS	4PDT W/ SOCKET AND HOLD DOWN SPRING

PARTS SCHEDULE IS CONTINUED ON SHEET E15

NOTES:

1. ALARM FLOAT SWITCH WILL BE SUPPLIED BY WWD AND INSTALLED BY CONTRACTOR.
2. DIMENSIONS, ITEMS, OR ELEVATIONS MARKED "*" SHALL BE DETERMINED AFTER EQUIPMENT SELECTION.

PROJECT MANAGER:John Pacifici
C:\PW_WORK2\D0861421\EDG-PLTS-PARTS SCHEDULE 1 CORDELIA.DWG - E14 - PLOTTED 11/20/2018 3:03 PM BY STARK, THOMAS
FIELD BOOK INFORMATION:-

REV#	DATE	DESCRIPTION	BY

ALAN M. SCHWAB, P.E.
FLORIDA LICENSE NO. 61313

WADE TRIM
201 North Franklin Street, Suite 1350
Tampa, FL 33602
813.882.4373
www.wadetrim.com
Certificate of Authorization No.: 3952

CITY OF TAMPA, FLORIDA
CORDELIA PUMP STATION
REHABILITATION

PARTS SCHEDULE (SHT. 1 OF 2)

ISSUED FOR:	DATE:	BY:
90% PLANS	7-16-18	RGB
100% PLANS	11-20-18	RGB

JOB NO. TPA2007-01M

SHEET E14

© Wade Trim Group, Inc.

Cordelia PS Rehabilitation

PARTS SCHEDULE (CONTINUED)

SYMBOL		NAME	PART				REMARKS
			MAKE	TYPE	MODEL OR CAT. #	RATING	
PCSR		PLC BASED PUMP CONTROLLER, SCADA, AND RADIO SYSTEM	MOTOROLA CORP.	DUPLEX PUMP CONTROLLER BASED ON ACE 3600 PROGRAM CONTROLLER	ACE 3600 BASIC MODEL NO. RADIO PART #7509	1–AC POWER SUPPLY 85–264V W/ BAT CHARGER PAR #: V261	COORDINATE EFFORT W/ SCADA INTEGRATOR
	SLOTS 1 & 2		MOTOROLA CORP.	2–MIXED I/O AUXILLARY INTERFACE WILKERSON BOARD PART #: SIB V245/ V453	MOTORBO XPR5350 RADIO UNF RI: 403–470MHZ, PART #UE1078A	1– ACE CPU3640 PART #: V446	1– 10.0 Ah BATTERY PART #: V328
					MOTORBO ANALOG RADIO INSTALLATION KIT PART #FLN1059		
		1–3 I/O SLOT FRAM PART #: V103	1–20 PIN TB HOLDER KIT PART #: V158	1– 14x 14 METAL CHASSIS PART #: V214	1–ACE MIXED I/O MODULE–16DI, 4DO(EE), (4)±20mA ANALOG IN PART #: V245 W/ 24VDC PLUG–IN, FLOATING POWER SUPPLY # FPN1653A	1–40 PIN TB HOLDER KIT PART #: V153	
	10.0 Ah BATT.						
PM1, PM2, PM3, PM4		3–PHASE POWER MONITOR	ATC DIVERSIFIED ELECTRONICS	8 PIN PLUG–IN	SLA–230–ALA	230 VAC	W/ OPTIONAL 5–SEC RELEASE AND DIN RAIL SOCKET–RB08PC
PDB		PWR DIST. BLOCK	BUSSMANN/EATON	THREE POLE	PDBFS220	600 V, 175 AMP	BARRIER TERMINAL BLOCKS
FBD1, 2, 3, 4		FUSE BLOCK / DISCONNECT	ALLEN BRADLEY	THREE PHASE– HIGH INTER. CAP.	1492–FB3C30–L	600 VAC, 200KAIC	W/ BUSSMANN KTK–R–2 FAST ACTING, REJECTION FUSES
PC–1		BACKUP PUMP CONTROLLER	WILKERSON	DUPLEX LIFT STATION	DR1920	10 AMP CONTACTS	DIN RAIL MOUNTING
FL		FLOAT SWITCH	ANCHOR SCIENTIFIC	SPDT	S2ONONC	10 A @ 120 V	PROVIDED BY THE CITY INSTALLED BY CONTRACTOR
FTB1, 2		FUSED TERMINAL BLOCKS	PHOENIX CONTACT		UK 5–HESI	PROVIDE 1, 2, & 5A FUSES	PROVIDE COOPER BUSSMAN GDB SERIES FUSES
SLD1, SLD2		PUMP MONITORING UNIT	XYLEM		MINI–CAS 120	10A AT 240V AC	
PCP		PUMP CONTROL PANEL ENCLOSURE	HOFFMAN	NEMA 4X, 3P LATCH, 42"x36"x12"	42"x36"x12" SS	304 SS, POWDER COATED WHITE	3P LATCH W/STOP KIT. EXTERNAL FINISH DURABLE RAL 9003 WHITE POWER COAT.
PP		ENCLOSURE PANEL	HOFFMAN	39" X 33", STEEL	A42P36	STEEL, 12 GAUGE	
NB1, 2		NEUTRAL DISTRIBUTION BLOCK	BUSSMAN	SINGLE POLE	16220–1	600V, 175A	
F1		PROCESS METER	PRECISION DIGITAL	4 DIGIT, 1.2" DISPLAY	PD765–6RO–10		PROVIDE 4–20mA OUTPUT
ALS		AREA LIGHT SWITCH	HUBBELL	SINGLE–POLE	HBL1221	277V, 20A	
SPD–2		SURGE PROTECTION DEVICE TYPE 3	PHOENIX CONTACT	3 CONDUCTOR SYSTEM (L, N, G)	2856812	120V, 25A	
FDTS		FUSED DOUBLE THROW DISCONNECT SWITCH	EATON	SERVICE ENTRANCE RATED, HEAVY DUTY	DT322FWK	DT100 NK NEUTRAL KIT DS100 GK GROUND KIT 60A, 3–POLE, 240V AC	TIME DELAY CLASS RK5 FUSES (3) EDISON ECNR60 (3) EDISON ECNR60 (PROVIDE (3) SPARES FOR EA.)
MS		METER SOCKET	MILBANK	7 TERMINAL	UAP9701–X–QG–HSP	600 VAC, 200 AMP	ALUMINUM CONSTRUCTION
EC		EMERGENCY CONNECTOR	CROUSE & HINDS	ARKTITE	AREA10415–S22 W/ BACK BOX, ANGLE ADAPTER, 1–1/2 HUB AND SPRING COVER	600V 100 AMP	
LA		LIGHTNING ARRESTER	GENERAL ELECTRIC	TRANQUELL	9L15ECC001	650V	

NOTES:

1. ALARM FLOAT SWITCH WILL BE SUPPLIED BY WWD AND INSTALLED BY CONTRACTOR.
2. DIMENSIONS, ITEMS, OR ELEVATIONS MARKED "*" SHALL BE DETERMINED AFTER EQUIPMENT SELECTION.

PROJECT MANAGER: John Pacifici
C:\PW_WORK2\D0861421\EDG–PLTS–PARTS SCHEDULE 2 CORDELIA.DWG – E15 – PLOTTED 11/20/2018 3:03 PM BY STARK, THOMAS
FIELD BOOK INFORMATION:–

REV#	DATE	DESCRIPTION	BY

ALAN M. SCHWAB, P.E.
FLORIDA LICENSE NO. 61313

WADE TRIM
201 North Franklin Street, Suite 1350
Tampa, FL 33602
813.882.4373
www.wadetrim.com
Certificate of Authorization No.: 3952

CITY OF TAMPA, FLORIDA
CORDELIA PUMP STATION
REHABILITATION

PARTS SCHEDULE (SHT. 2 OF 2)

ISSUED FOR: DATE: BY:
90% PLANS 7–16–18 RGB
100% PLANS 11–20–18 RGB

JOB NO.
TPA2007–01M

SHEET
E15

© Wade Trim Group, Inc.

Cordelia PS Rehabilitation

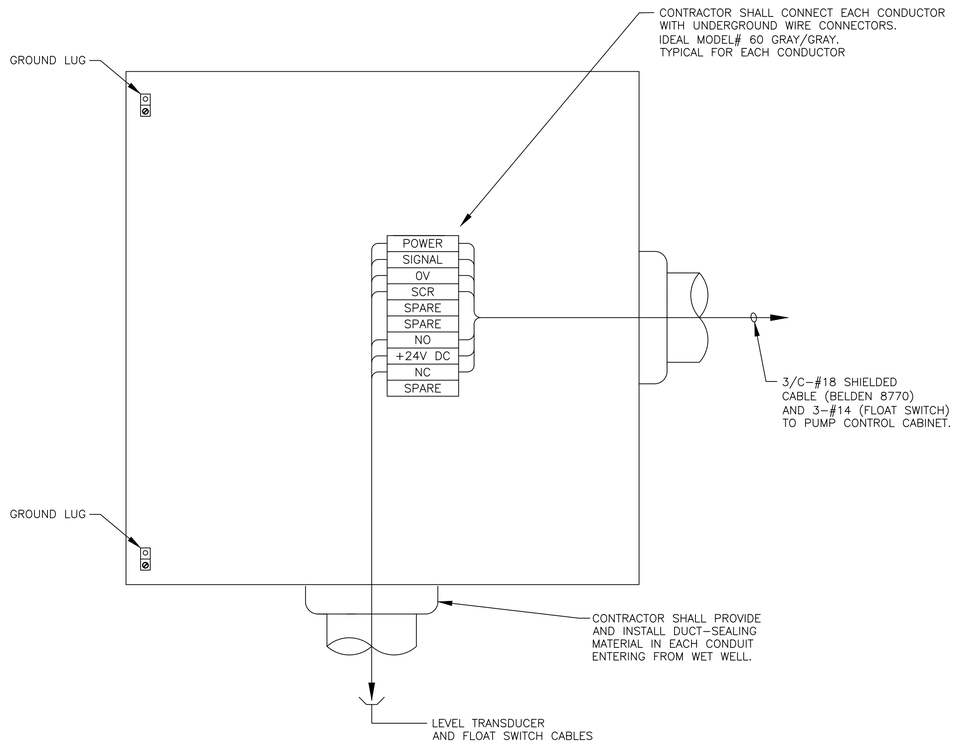

NOTES:

1. COVER NOT SHOWN FOR CLARITY
2. BOND GROUNDING CONDUCTORS TO ENCLOSURE BACK PANEL.

INSTRUMENTATION AND CONTROLS JUNCTION BOX DETAIL

N.T.S.

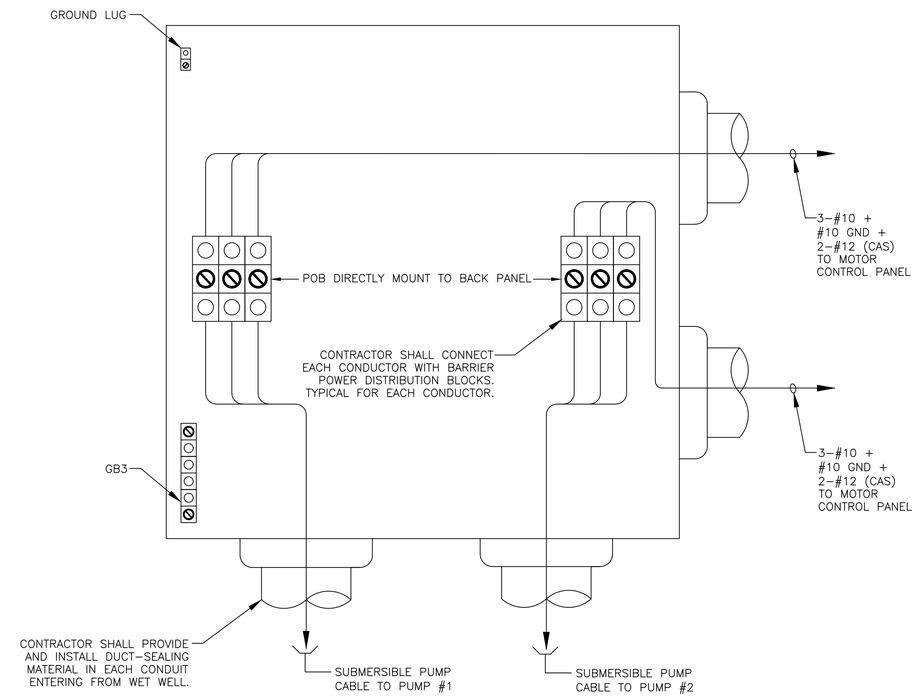

NOTES:

1. COVER NOT SHOWN FOR CLARITY
2. BOND GROUNDING CONDUCTORS TO ENCLOSURE BACK PANEL.

PUMP MOTOR CONNECTIONS JUNCTION BOX DETAIL

N.T.S.

NOTE:
ALL HINGED SURFACES SHALL BE GROUNDED WITH A BONDING JUMPER SECURED TO THE ENCLOSURE OR BACKPANEL.

PROJECT MANAGER:John Pacifici
C:\PW_WORK2\D0861421\EDG-PLTS-ELECTRICAL DETAILS 1 CORDELIA.DWG - E16 - PLOTTED 11/20/2018 3:03 PM BY STARK, THOMAS
FIELD BOOK INFORMATION:-

REV#	DATE	DESCRIPTION	BY

ALAN M. SCHWAB, P.E.
FLORIDA LICENSE NO. 61313

WADE TRIM
201 North Franklin Street, Suite 1350
Tampa, FL 33602
813.882.4373
www.wadetrim.com
Certificate of Authorization No.: 3952

CITY OF TAMPA, FLORIDA
CORDELIA PUMP STATION
REHABILITATION

ELECTRICAL DETAILS (SHT. 1 OF 5)

ISSUED FOR: DATE: BY:
90% PLANS 7-16-18 RGB
100% PLANS 11-20-18 RGB

JOB NO.
TPA2007-01M

SHEET
E16

Cordelia PS Rehabilitation

© Wade Trim Group, Inc.

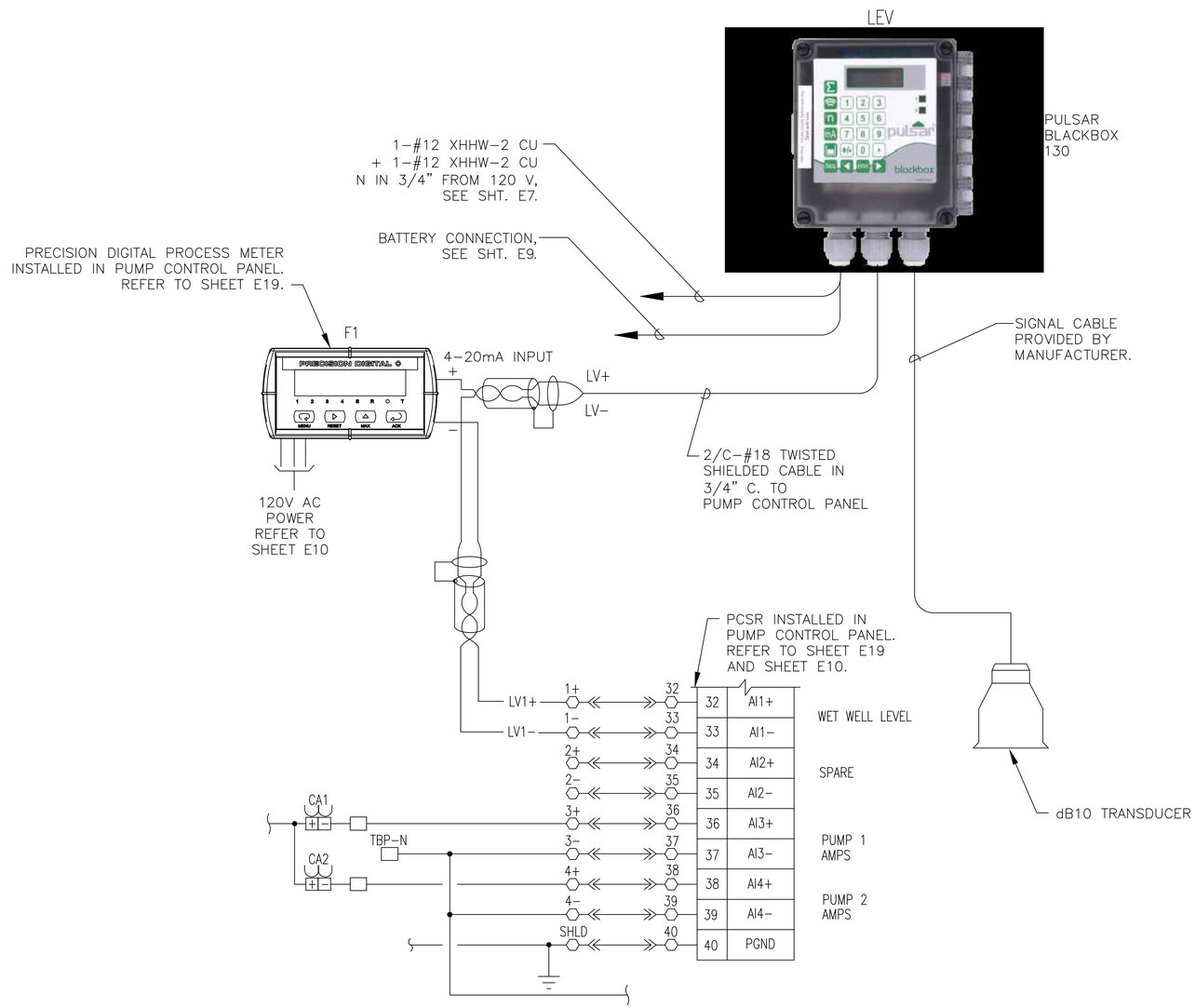

LEVEL TRANSDUCER WIRING SCHEMATIC

ALL WIRING TO BE VERIFIED/CONFIRMED WITH MANUFACTURER PRIOR TO INSTALLATION

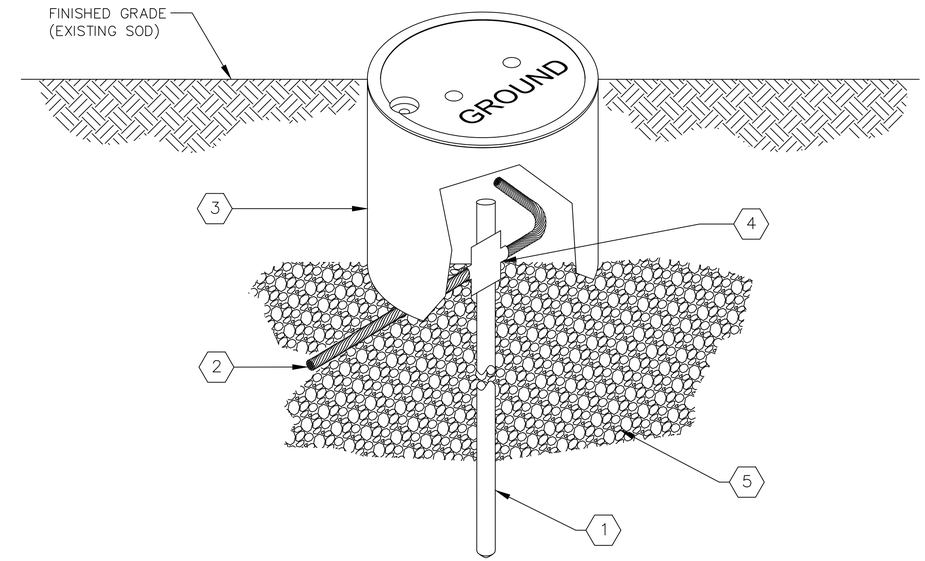

GROUND TEST WELL DETAIL KEYED NOTES:

1. NEW GROUND ROD, STAINLESS STEEL, 5/8" X 10'–0" (TYP).
2. #4 BARE STRANDED COPPER GROUNDING ELECTRODE CONDUCTOR (TYP).
3. PROVIDE AND INSTALL OLDCASTLE PRECAST ENCLOSURE SOLUTIONS #F08 BOX WITH #F08C CAST IRON LID MARKED "GROUND".
4. EXOTHERMIC WELD.
5. PROVIDE 6" MINIMUM OF CRUSHED STONE.

GROUNDING TEST WELL DETAIL

SCALE: N.T.S.

PROJECT MANAGER: John Pacifici
C:\PW_WORK2\00861421\EDG-PLTS-ELECTRICAL DETAILS 2 CORDELIA.DWG – E17 – PLOTTED 11/20/2018 3:03 PM BY STARK, THOMAS
FIELD BOOK INFORMATION:–

REV#	DATE	DESCRIPTION	BY

ALAN M. SCHWAB, P.E.
FLORIDA LICENSE NO. 61313

WADE TRIM
201 North Franklin Street, Suite 1350
Tampa, FL 33602
813.882.4373
www.wadetrim.com
Certificate of Authorization No.: 3952

CITY OF TAMPA, FLORIDA
CORDELIA PUMP STATION
REHABILITATION

ELECTRICAL DETAILS (SHT. 2 OF 5)

ISSUED FOR: DATE: BY:
90% PLANS 7–16–18 RGB
100% PLANS 11–20–18 RGB

JOB NO. TPA2007–01M
SHEET E17

Cordelia PS Rehabilitation

© Wade Trim Group, Inc.

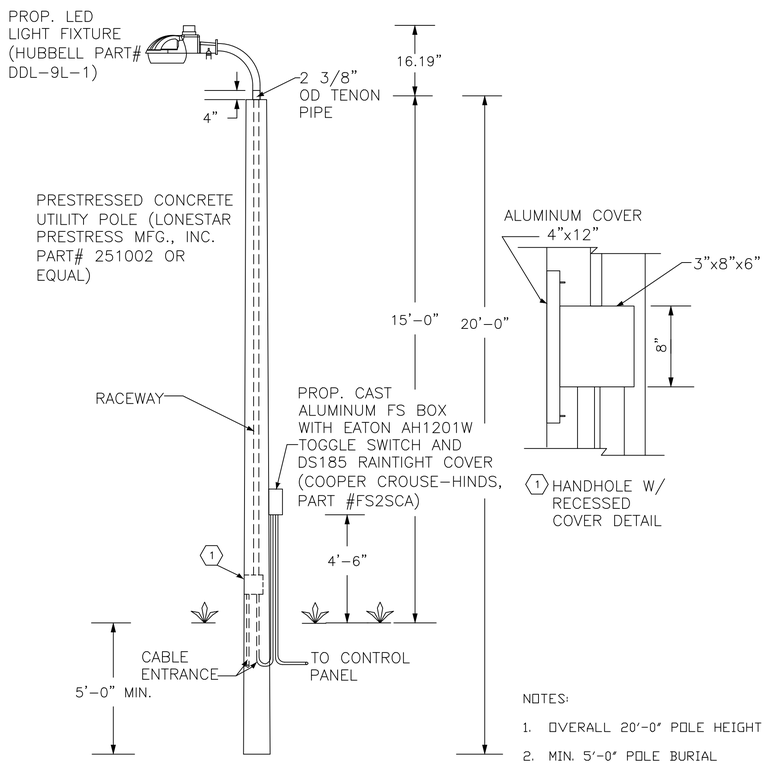

NOTES:

1. OVERALL 20'-0" POLE HEIGHT
2. MIN. 5'-0" POLE BURIAL
3. COORDINATE LOCATION OF THE AREA LIGHT WITH PLANT PERSONNEL
4. USE STAINLESS STEEL PIPE STRAPS SPACED 2'-0" APART TO MOUNT CONDUIT

AREA LIGHT (AL) DETAIL

SCALE: N.T.S.

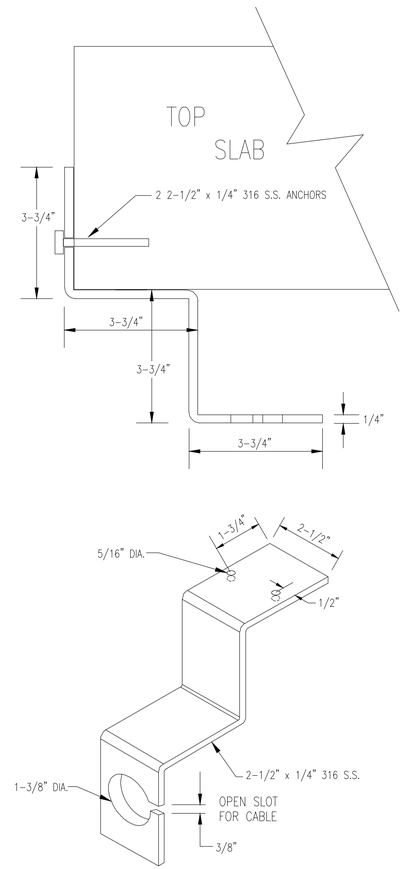

NOTE:

ROUND OVER ALL EDGES,
RADIUS ALL CORNERS

DB10 OR PULSAR MOUNTING BRACKET DETAIL

SCALE: N.T.S.

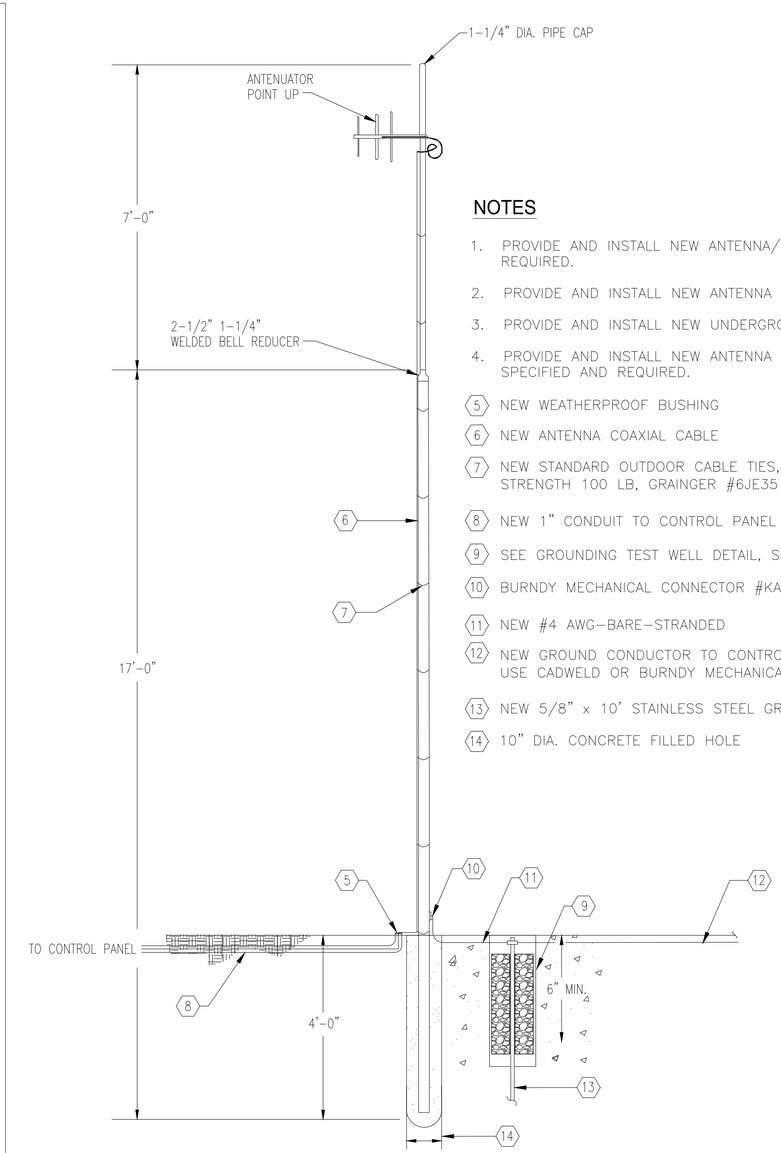

NOTES

1. PROVIDE AND INSTALL NEW ANTENNA/MAST, AS SHOWN, SPECIFIED AND REQUIRED.
2. PROVIDE AND INSTALL NEW ANTENNA COAX CABLE, AS REQUIRED.
3. PROVIDE AND INSTALL NEW UNDERGROUND CONDUIT, AS REQUIRED.
4. PROVIDE AND INSTALL NEW ANTENNA GROUNDING SYSTEM, AS SHOWN, SPECIFIED AND REQUIRED.

(5) NEW WEATHERPROOF BUSHING

(6) NEW ANTENNA COAXIAL CABLE

(7) NEW STANDARD OUTDOOR CABLE TIES, 304 STAINLESS STEEL, TENSILE STRENGTH 100 LB, GRAINGER #6JE35

(8) NEW 1" CONDUIT TO CONTROL PANEL

(9) SEE GROUNDING TEST WELL DETAIL, SHEET E17

(10) BURNDY MECHANICAL CONNECTOR #KA25-4-1/0

(11) NEW #4 AWG-BARE-STRANDED

(12) NEW GROUND CONDUCTOR TO CONTROL PANEL GROUNDING SYSTEM, USE CADWELD OR BURNDY MECHANICAL CONNECTOR #VT2525

(13) NEW 5/8" x 10' STAINLESS STEEL GROUND ROD

(14) 10" DIA. CONCRETE FILLED HOLE

ANTENNA DETAIL

SCALE: N.T.S.

PROJECT MANAGER:John Pacifici
C:\PW_WORK2\D0861421\EDG-PLTS-ELECTRICAL DETAILS 3 CORDELIA.DWG - LAYOUT1 - PLOTTED 11/20/2018 3:04 PM BY STARK, THOMAS
FIELD BOOK INFORMATION:-

REV#	DATE	DESCRIPTION	BY

ALAN M. SCHWAB, P.E.
FLORIDA LICENSE NO. 61313

WADE TRIM
201 North Franklin Street, Suite 1350
Tampa, FL 33602
813.882.4373
www.wadetrim.com
Certificate of Authorization No.: 3952

CITY OF TAMPA, FLORIDA
CORDELIA PUMP STATION
REHABILITATION

ELECTRICAL DETAILS (SHT. 3 OF 5)

ISSUED FOR: DATE: BY:
90% PLANS 7-16-18 RGB
100% PLANS 11-20-18 RGB

JOB NO. TPA2007-01M

SHEET E18

© Wade Trim Group, Inc.

Cordelia PS Rehabilitation

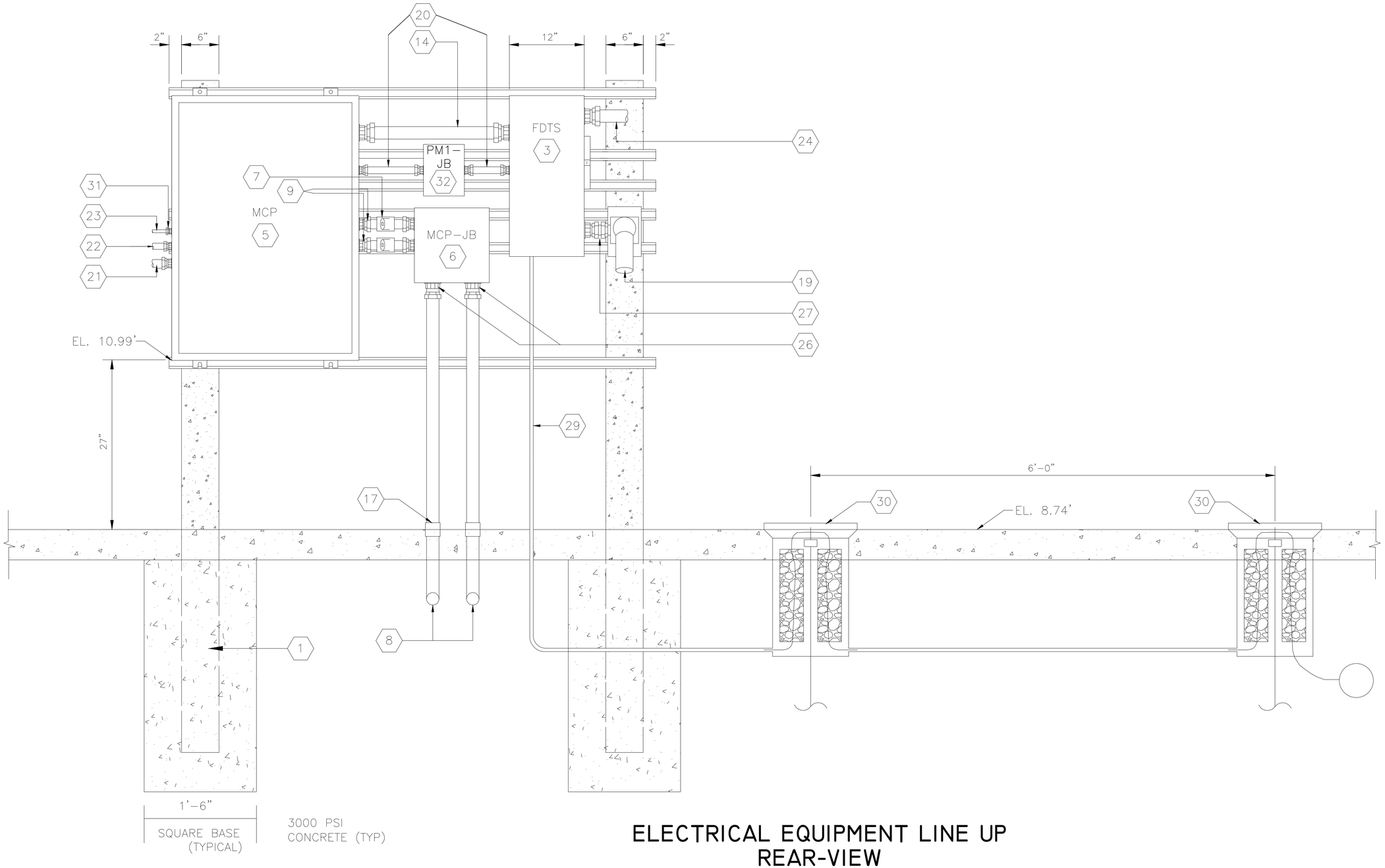

ELECTRICAL EQUIPMENT LINE UP
REAR-VIEW

SCALE: 1/2" =1'-0"

PROJECT MANAGER:John Pacifici
C:\PW_WORK2\D0861421\EDG-PLTS-ELECTRICAL DETAILS 4 CORDELIA.DWG - E18A - PLOTTED 11/20/2018 3:04 PM BY STARK, THOMAS
FIELD BOOK INFORMATION:-

REV#	DATE	DESCRIPTION	BY

ALAN M. SCHWAB, P.E.
FLORIDA LICENSE NO. 61313

WADE TRIM
201 North Franklin Street, Suite 1350
Tampa, FL 33602
813.882.4373
www.wadetrim.com
Certificate of Authorization No.: 3952

CITY OF TAMPA, FLORIDA
CORDELIA PUMP STATION
REHABILITATION

ELECTRICAL DETAILS (SHT. 4 OF 5)

ISSUED FOR:	DATE:	BY:
90% PLANS	7-16-18	RGB
100% PLANS	11-20-18	RGB

JOB NO. TPA2007-01M

SHEET E18A

Cordelia PS Rehabilitation

© Wade Trim Group, Inc.

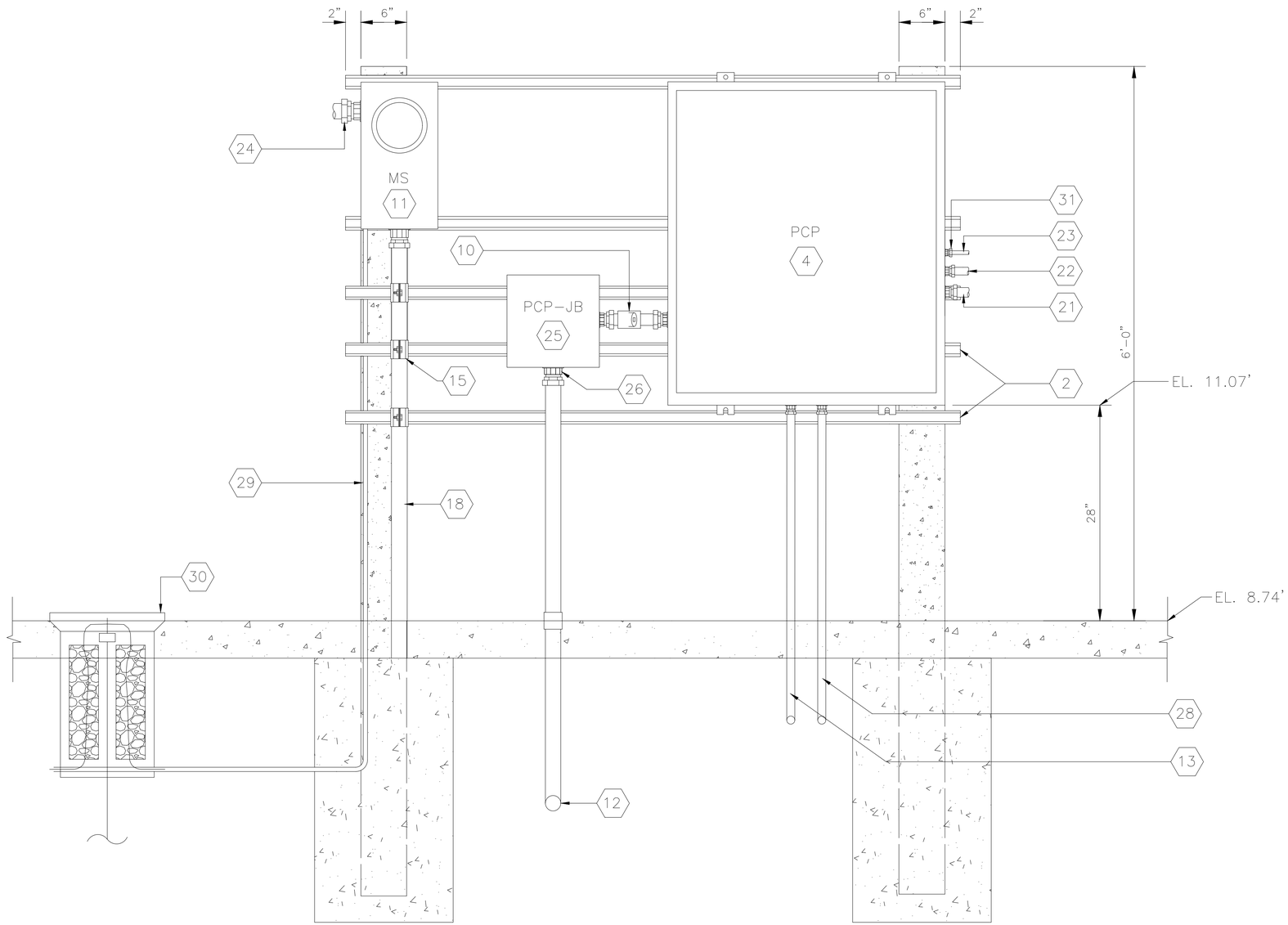

ELECTRICAL EQUIPMENT LINE UP
FRONT-VIEW

SCALE: 1/2" =1'-0"

REV#	DATE	DESCRIPTION	BY

ALAN M. SCHWAB, P.E.
FLORIDA LICENSE NO. 61313

WADE TRIM

201 North Franklin Street, Suite 1350
Tampa, FL 33602
813.882.4373
www.wadetrim.com
Certificate of Authorization No.: 3952

CITY OF TAMPA, FLORIDA
CORDELIA PUMP STATION
REHABILITATION

ELECTRICAL DETAILS (SHT. 5 OF 5)

ISSUED FOR:	DATE:	BY:
90% PLANS	7-16-18	RGB
100% PLANS	11-20-18	RGB

JOB NO.: TPA2007-01M

SHEET: E18B

© Wade Trim Group, Inc.

Cordelia PS Rehabilitation

PROJECT MANAGER: John Pacifici
C:\PW_WORK2\D0861421\EDG-PLTS-ELECTRICAL DETAILS 5 CORDELIA.DWG - E18B - PLOTTED 11/20/2018 3:04 PM BY STARK, THOMAS
FIELD BOOK INFORMATION:-

KEYED NOTES:

1. PROVIDE AND INSTALL THREE (3) 6" X 6" x 10' REINFORCED SQUARE CONCRETE POSTS.
2. PROVIDE AND INSTALL 1-5/8" x 1-5/8" 316 STAINLESS STEEL UNISTRUT WITH 316 STAINLESS STEEL HARDWARE. NOTE: INSTALL ALL BOLTS FOR UNISTRUT COMPLETELY THROUGH CONCRETE POSTS.
3. PROVIDE AND INSTALL SERVICE ENTRANCE RATED HEAVY DUTY, DOUBLE THROW, FUSIBLE SWITCH, 3-POLE, 240 VAC, 60 AMP IN NEMA 4X TYPE ENCLOSURE, 240 VOLT, DUAL-ELEMENT, TIME-DELAY CLASS RK5 FUSES; SWITCH--EATON DT322FWK, DT100NK NEUTRAL KIT, DS100GK GROUND LUG KIT, DS36FK- "R" FUSE ADAPTER KIT.
4. PROVIDE AND INSTALL PUMP CONTROL CABINET. REFER TO DETAIL ON SHEET E19.
5. PROVIDE AND INSTALL MOTOR CONTROL CABINET. REFER TO DETAIL ON SHEET E20.
6. PUMP MOTOR CONNECTIONS J.B.-USED AS A DEMARCATION BOX TO PROVIDE ISOLATION BETWEEN THE WET WELL AND PUMP CONTROLS. PROVIDE AND INSTALL A 12"x12"x6" NEMA 4X, STAINLESS STEEL JUNCTION BOX WITH HINGED DOOR, WIEGMANN #BN4121206CHSS. INSTALL A STAINLESS STEEL LOUVER PLATE KIT (4.75"x 4.5") ON SIDE OF BOX TO PROVIDE NATURAL ASPIRATION, WIEGMANN #WAVK0304SSA. TERMINATIONS SHALL BE MADE USING BARRIER POWER DISTRIBUTION BLOCKS (TYPICAL FOR EACH CONDUCTOR) SEE SHEET E16 FOR JB DETAILS.
7. PROVIDE AND INSTALL CROUSE-HINDS EYS TYPE SEALS W/CHICO COMPOUNDS.
8. PROPOSED 2" PVC COATED ALUMINUM CONDUITS FOR MOTOR CONDUCTORS. INSTALL CONDUIT AS DESCRIBED IN NOTE 1 OF SHEET E5.
9. PROVIDE AND INSTALL (3)-#10 XHHW-2 CU + (1)-#10 XHHW-2 CU GND + (2)-#12 XHHW-2 CU (LEAK/TEMP) IN 1" CONDUIT FOR SUBMERSIBLE PUMP POWER.
10. PROVIDE AND INSTALL (3)-#14 XHHW-2 CU + (1)-#14 XHHW-2 CU GND + (1)-3/C-#18 TWISTED SHIELDED CABLE IN 1" CONDUIT FOR FLOAT AND WET WELL LEVEL TRANSMITTER.
11. PROVIDE AND INSTALL METER SOCKET IN ALUMINUM ENCLOSURE.
12. PROPOSED 2" PVC COATED ALUMINUM CONDUIT FOR I&C CONDUCTORS. INSTALL CONDUIT AS DESCRIBED IN NOTE 2 OF SHEET E5.
13. PROVIDE AND INSTALL 1" CONDUIT FOR ANTENNA COAXIAL CABLE REFER TO SHEET E5 and E18 FOR CONTINUATION.
14. PROVIDE AND INSTALL (3)-#3 THWN CU, (1)-#4 THWN NEU, AND (1)-#6 THWN CU GND. IN 2" CONDUIT.
15. PROVIDE AND INSTALL ALUMINUM CONDUIT STRAPS (TYPICAL).
16. NOT USED.
17. FOR UNDERGROUND RACEWAYS TO WETWELL THE CONTRACTOR SHALL UTILIZE PVC COATED ALUMINUM.
18. PROVIDE AND INSTALL (3)-#3 AWG + (1)-#4 NEU. IN 2" CONDUIT TO PROPOSED TECO HANDHOLE. SEE SHEET E5 FOR CONTINUATION.
19. PROVIDE AND INSTALL AN EMERGENCY CONNECTOR.
20. PROVIDE AND INSTALL (3)-#12 XHHW-2 CU + (1)# 12 XHHW-2 CU GND. IN 3/4" C.
21. PROVIDE AND INSTALL (26)-#12 XHHW-2 CU + (1)# 12 XHHW-2 CU GND. IN 1-1/4" C. FOR 120VAC CONTROL SIGNALS. REFER TO MCP TO PCP INTERCONNECTIONS WIRING DIAGRAM ON SHEET E11.
22. PROVIDE AND INSTALL (15)-#14 XHHW-2 CU + (1)-#14 XHHW-2 CU GND. IN 1" C. FOR 24V DC CONTROL SIGNALS, REFER TO MCP TO PCP INTERCONNECTION WIRING DIAGRAM ON SHEET E11.
23. PROVIDE AND INSTALL (1)-#12 XHHW-2 CU NUE. + (1)#12 XHHW-2 CU GND. IN 3/4" CONDUIT FROM MOTOR CONTROLS PANEL TO PUMP CONTROL PANEL FOR 120V POWER CIRCUIT.
24. PROVIDE AND INSTALL (3)-#3 THWN CU + (1)-#4 THWN NEU. IN 2" CONDUIT.
25. INSTRUMENTATION AND CONTROLS J.B.-USED AS DEMARCATION BOX TO PROVIDE ISOLATION BETWEEN THE WET WELL AND PUMP CONTROLS. PROVIDE AND INSTALL A 12"x12"x6" NEMA 4X, STAINLESS STEEL JUNCTION BOX WITH HINGED DOOR, WIEGMANN #BN4121206CHSS. INSTALL A STAINLESS STEEL LOUVER PLATE KIT (4.75"x4.5") ON SIDE OF BOX TO PROVIDE NATURAL ASPIRATION, WIEGMANN #WAVK0304SSA. TERMINATIONS SHALL BE MADE WITH UNDERGROUND WIRE CONNECTORS - IDEAL MODEL #60 - (TYPICAL FOR EACH CONDUCTOR). SEE SHEET E16 FOR JB DETAILS.
26. PROVIDE DUCT SEALING COMPOUND IN ALL CONDUITS EXTENDING TO THE WET WELL.
27. PROVIDE AND INSTALL (3)-#3 XHHW-2 CU + (1)-#4 XHHW-2 CU NEU + (1)-#6 XHHW-2 CU GND IN 1-1/4" CONDUIT FOR EMERGENCY CONNECTOR.
28. PROVIDE AND INSTALL A 3/4" CONDUIT TO PROPOSED AREA LIGHT, (AL), SEE SHT. E18 FOR DETAILS.
29. PROVIDE AND INSTALL A 3/4" SCHEDULE 80 PVC CONDUIT FOR #4 AWG GROUNDING CONDUCTOR.
30. PROPOSED GROUND TEST WELL. MINIMUM SPACING BETWEEN WELLS 6'-0". SEE SHEET E17 FOR DETAILS.
31. PROVIDE AND INSTALL WATER-TIGHT / DUST-TIGHT MYERS HUB AND UNION (TYP.).
32. PM1 J.B.- PROVIDE AND INSTALL A 8"x6"x3.5" NEMA 4X, STAINLESS STEEL JUNCTION BOX, ENCLOSURE PART NUMBER EJ863516. SEE E21 FOR JB DETAILS.

PROJECT MANAGER:John Pacifici
C:\PW_WORK2\00861421\EDG-PLTS-KEYNOTES CORDELIA.DWG - E18C - FIELD BOOK INFORMATION:- PLOTTED 11/20/2018 3:04 PM BY STARK, THOMAS

REV#	DATE	DESCRIPTION	BY

ALAN M. SCHWAB, P.E.
FLORIDA LICENSE NO. 61313

WADE TRIM
201 North Franklin Street, Suite 1350
Tampa, FL 33602
813.882.4373
www.wadetrim.com
Certificate of Authorization No.: 3952

CITY OF TAMPA, FLORIDA
CORDELIA PUMP STATION
REHABILITATION

ELECTRICAL KEYNOTES

ISSUED FOR:	DATE:	BY:
90% PLANS	7-16-18	RGB
100% PLANS	11-20-18	RGB

JOB NO. TPA2007-01M

SHEET E18C

© Wade Trim Group, Inc.

Cordelia PS Rehabilitation

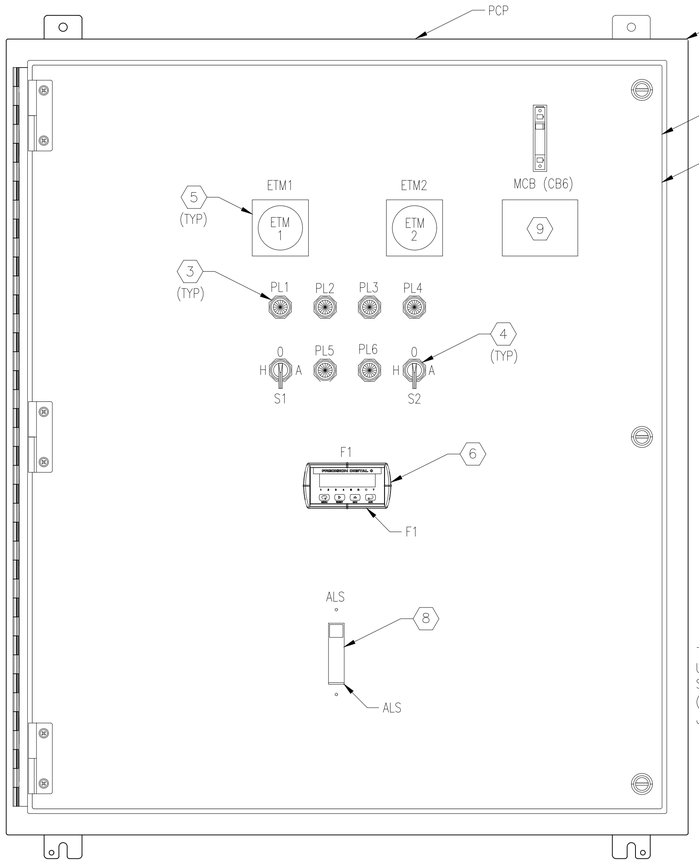

PUMP CONTROL PANEL DETAILS

SCALE: 1 1/2" = 1'-0"

NOTE: FRONT ENCLOSURE DOOR NOT SHOWN FOR CLARITY

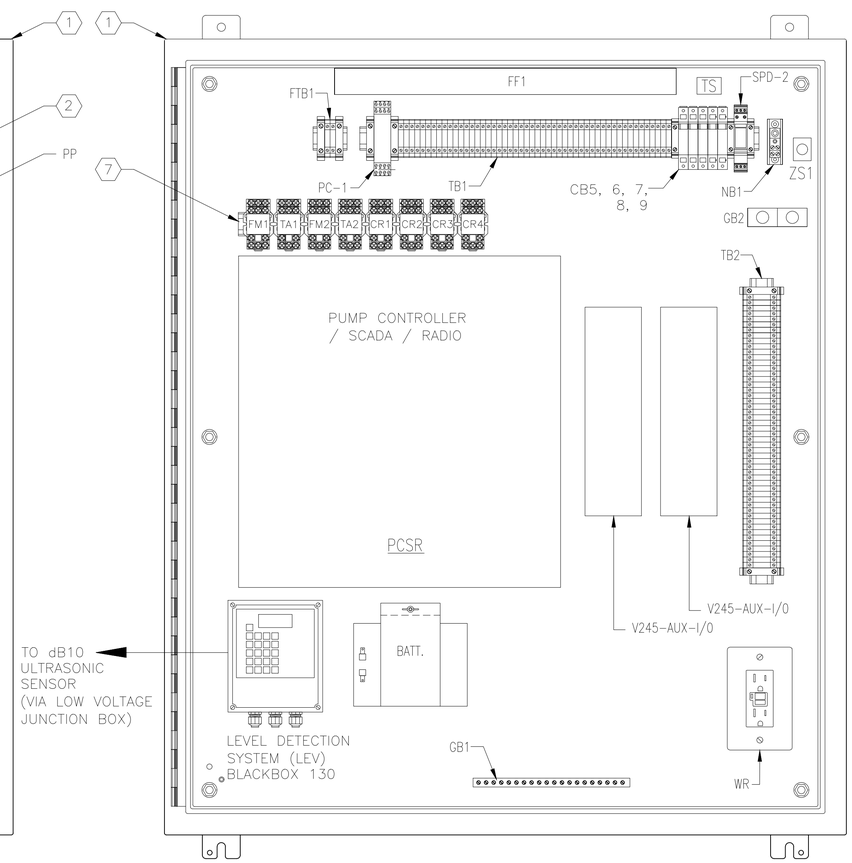

PANEL INTERIOR

LEGEND PLATE SCHEDULE

SYMBOL	DEVICE	LEGEND
ETM1	ELAPSED TIME METER	PUMP NO. 1 HOURS
ETM2	ELAPSED TIME METER	PUMP NO. 2 HOURS
PL1	YELLOW PILOT LIGHT	PUMP NO. 1 ON
PL2	RED ILLUMINATED PUSH BUTTON	PUMP NO. 1 TEMP. ALARM
PL3	RED ILLUMINATED PUSH BUTTON	PUMP NO. 2 TEMP. ALARM
PL4	YELOW PILOT LIGHT	PUMP NO. 2 ON
PL5	RED PILOT LIGHT	PUMP NO. 1 SEAL LEAK ALARM
PL6	RED PILOT LIGHT	PUMP NO. 2 SEAL LEAK ALARM
S1	3 POSITION SWITCH	PUMP NO. 1 HAND-OFF-AUTO
S2	3 POSITION SWITCH	PUMP NO. 2 HAND-OFF-AUTO
MCB	PUMP CONTROL PANEL MAIN CIRCUIT BREAKER	MAIN CIRCUIT BREAKER
F1	DIGITAL PROCESS METER	WET WELL LEVEL
ALS	TOGGLE SWITCH	AREA LIGHT SWITCH

KEYED NOTES:

1. PUMP CONTROL CABINET. 42" X 36" X 12" NEMA 4X SS, PAINTED WHITE.
2. PROVIDE AND INSTALL ALUMINUM DEADFRONT DOOR WITH STOP KIT.
3. PROVIDE AND INSTALL NEW PILOT LIGHT. REFER ALSO TO PARTS SCHEDULE ON SHEET E14.
4. PROVIDE AND INSTALL NEW SELECTOR SWITCH. REFER ALSO TO PARTS SCHEDULE ON SHEET E14.
5. PROVIDE AND INSTALL NEW ELAPSED TIME METER. REFER ALSO TO PARTS SCHEDULE ON SHEET E14.
6. PROVIDE AND INSTALL PRECISION DIGITAL PROCESS METER, MODEL PD765-6R0-10 WITH 4-20mA OUTPUT. REFER ALSO TO PARTS SCHEDULE ON SHEET E15.
7. PROVIDE AND INSTALL ALUMINUM DIN RAIL WHERE REQUIRED.
8. PROVIDE AND INSTALL NEW SINGLE-POLE 120/277V, 20A LIGHT SWITCH TO CONTROL AREA LIGHT. REFER ALSO TO PARTS SCHEDULE ON SHEET E15.
9. PROVIDE WARNING LABEL ABOVE OR BELOW CB6. LABEL TO READ:
   "WARNING: THE 120VAC SUPPLY FOR THIS PUMP CONTROL PANEL (PCP) IS FED FROM MOTOR CONTROL PANEL MCP AND WILL BE PRESENT AT THE LINE SIDE OF MCB (CB-6) LOCATED IN THIS PANEL. LOCK AND TAG OUT THE MOTOR CONTROL PANEL DISCONNECT PRIOR TO OPENING DEAD FRONT DOOR."

PROJECT MANAGER-John Pacifici
C:\PW_WORK2\0086142\EDG-PLTS-PUMP CONTROL PANEL DETAILS CORDELIA.DWG - E19 - PLOTTED 11/20/2018 3:05 PM BY STARK, THOMAS
FIELD BOOK INFORMATION:-

REV#	DATE	DESCRIPTION	BY

ALAN M. SCHWAB, P.E.
FLORIDA LICENSE NO. 61313

WADE TRIM
201 North Franklin Street, Suite 1350
Tampa, FL 33602
813.882.4373
www.wadetrim.com
Certificate of Authorization No.: 3952

CITY OF TAMPA, FLORIDA
CORDELIA PUMP STATION
REHABILITATION

PUMP CONTROL PANEL DETAILS

ISSUED FOR:	DATE:	BY:
90% PLANS	7-16-18	RGB
100% PLANS	11-20-18	RGB

JOB NO. TPA2007-01M

SHEET E19

Cordelia PS Rehabilitation

© Wade Trim Group, Inc.

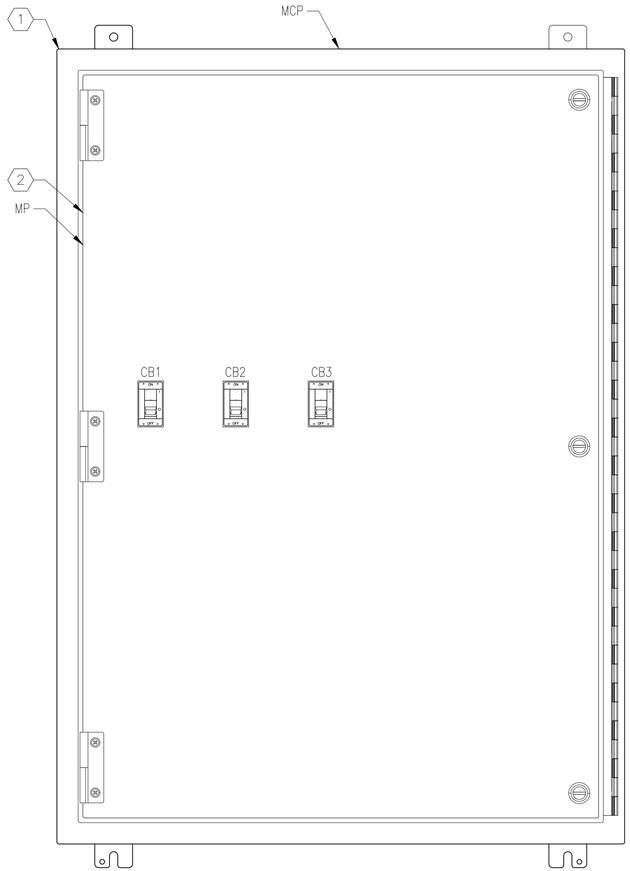

MOTOR CONTROL PANEL
DETAILS

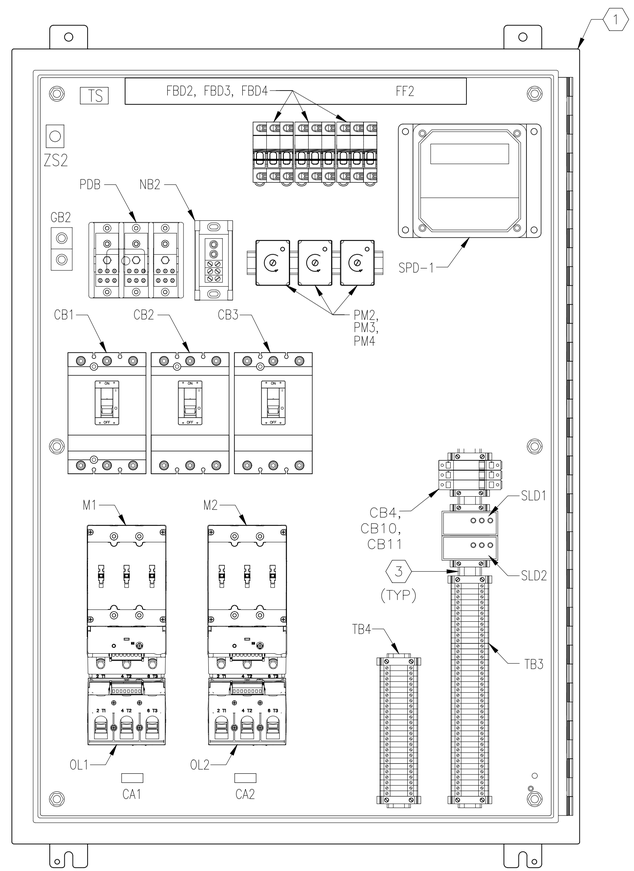

PANEL INTERIOR
DETAILS

LEGEND PLATE SCHEDULE

SYMBOL	DEVICE	LEGEND
CB1	CIRCUIT BREAKER	PUMP NO. 1 CIRCUIT BREAKER
CB2	CIRCUIT BREAKER	PUMP NO. 2 CIRCUIT BREAKER
CB3	CIRCUIT BREAKER	SPARE CIRCUIT BREAKER

KEYED NOTES:

1. MOTOR CONTROL CABINET. 42" X 30" X 12" NEMA 4X SS, POWDER COAT WHITE.
2. PROVIDE AND INSTALL ALUMINUM DEADFRONT DOOR WITH STOP KIT.
3. PROVIDE AND INSTALL ALUMINUM DIN RAIL WHERE REQUIRED.
4. PROVIDE WARNING LABEL ON ENCLOSURE DOOR.
   LABEL TO READ:
   "WARNING – OPENING FUSED DOUBLE THROW SWITCH DOES NOT DE–ENERGIZE VOLTAGE TO THIS ENCLOSURE"
5. SEE SHEET E21 FOR FURTHER PM1 JUNCTION BOX DETAIL.

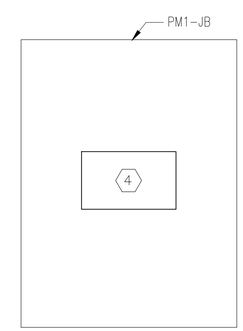

PM1 JUNCTION BOX
DETAILS 5

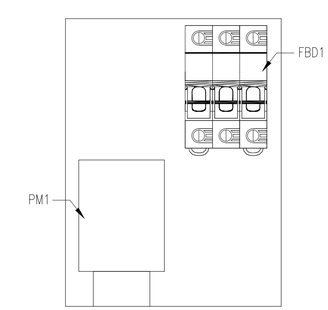

JUNCTION BOX INTERIOR
DETAILS 5

PROJECT MANAGER: John Pacifici
C:\PW_WORK2\D0861421\EDG-PLTS-MOTOR CONTROL PANEL DETAILS CORDELIA.DWG - E20 - PLOTTED 11/20/2018 3:06 PM BY STARK, THOMAS
FIELD BOOK INFORMATION:-

REV#	DATE	DESCRIPTION	BY

ALAN M. SCHWAB, P.E.
FLORIDA LICENSE NO. 61313

WADE TRIM
201 North Franklin Street, Suite 1350
Tampa, FL 33602
813.882.4373
www.wadetrim.com
Certificate of Authorization No.: 3952

CITY OF TAMPA, FLORIDA
CORDELIA PUMP STATION
REHABILITATION

MOTOR CONTROL PANEL DETAILS

ISSUED FOR: DATE: BY:
90% PLANS 7-16-18 RGB
100% PLANS 11-20-18 RGB

JOB NO. TPA2007-01M
SHEET E20

Cordelia PS Rehabilitation

© Wade Trim Group, Inc.

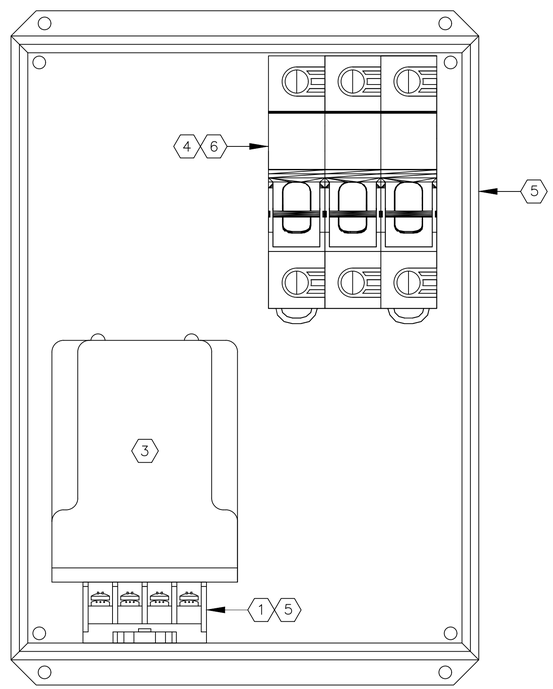

FRONT VIEW
N.T.S.

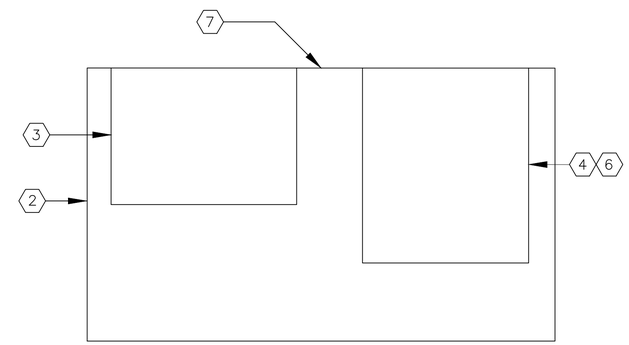

TOP VIEW
N.T.S.

KEYED NOTES:

1. 8 PIN OCTAL SOCKET, DIN RAIL MOUNTED OT08
2. NEMA 4X STAINLESS STEEL, 8"x 6"x 3.5" ENCLOSURE PART NUMBER EJ863516
3. 3-PHASE POWER MONITOR, PM1
4. FUSE DISTRIBUTION BLOCK, FDB1
5. MOUNTED TO BOTTOM OF ENCLOSURE
6. DIRECTLY MOUNTED TO BACK OF ENCLOSURE
7. BACK OF ENCLOSURE

PM1 JUNCTION BOX DETAIL

PROJECT MANAGER:John Pacifici
C:\PW_WORK2\D0861421\EDG-PLTS-PM1 ENCLOSURE DETAIL CORDELIA.DWG - E21 - PLOTTED 11/20/2018 3:06 PM BY STARK, THOMAS
FIELD BOOK INFORMATION:-

REV#	DATE	DESCRIPTION	BY

ALAN M. SCHWAB, P.E.
FLORIDA LICENSE NO. 61313

WADE TRIM
201 North Franklin Street, Suite 1350
Tampa, FL 33602
813.882.4373
www.wadetrim.com
Certificate of Authorization No.: 3952

CITY OF TAMPA, FLORIDA
CORDELIA PUMP STATION
REHABILITATION

PM1 ENCLOSURE DETAIL

ISSUED FOR:	DATE:	BY:
90% PLANS	7-16-18	RGB
100% PLANS	11-20-18	RGB

JOB NO. TPA2007-01M
SHEET E21

Cordelia PS Rehabilitation

© Wade Trim Group, Inc.

CITY OF TAMPA

GRECO PUMP STATION REHABILITATION

100% PLANS
CONTRACT NO. 18-C-00042

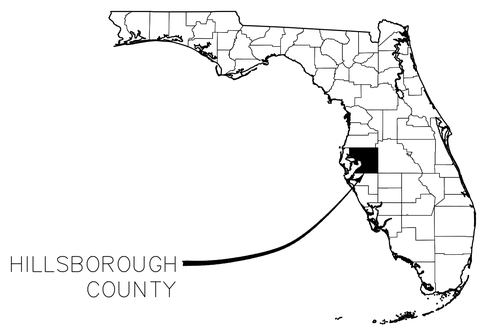

KEY MAP
NOT TO SCALE

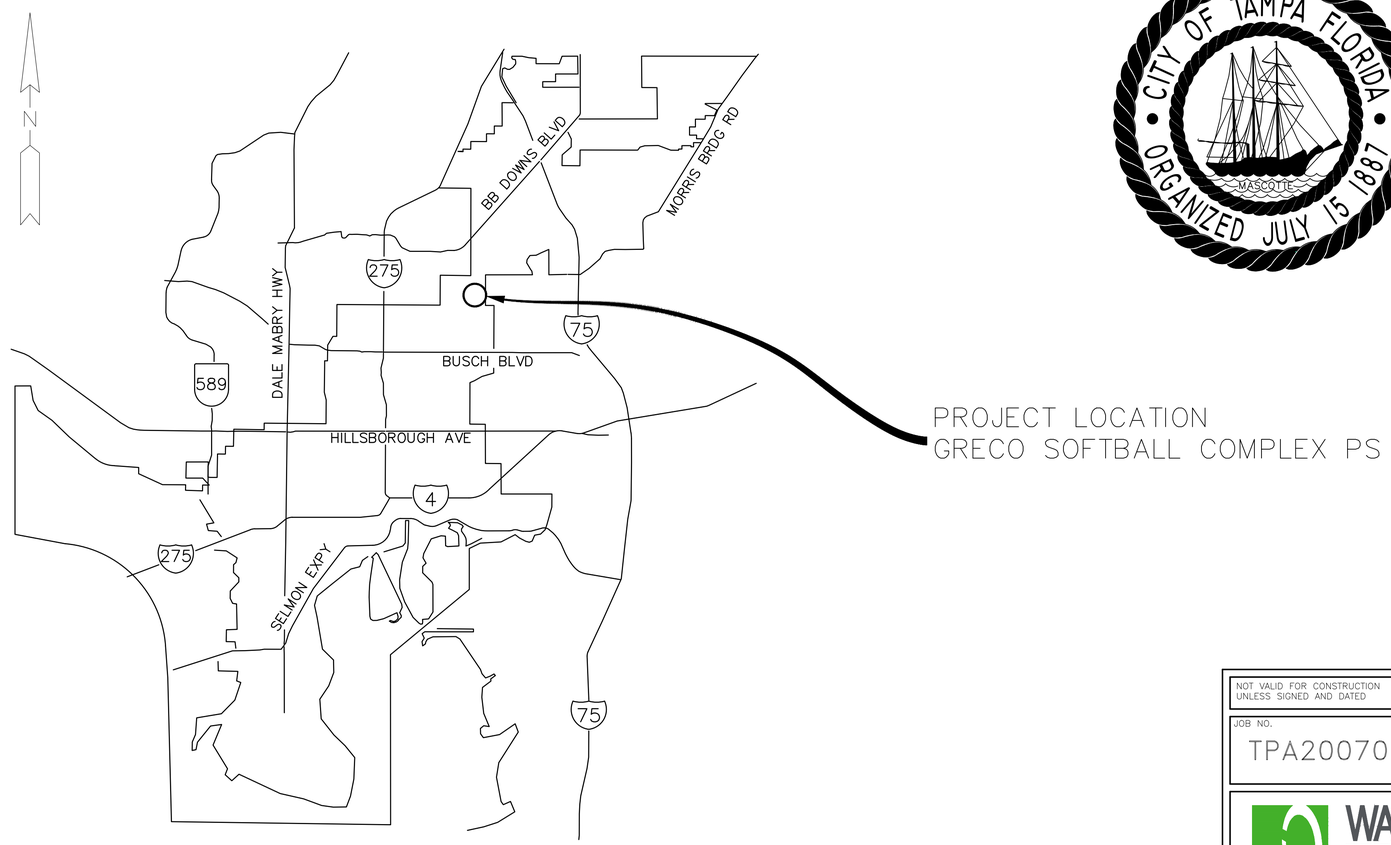

811
Know what's **below.**
Call before you dig.

NOT VALID FOR CONSTRUCTION
UNLESS SIGNED AND DATED

JOB NO.	SHEET
TPA200701M	G-1

WADE TRIM
201 North Franklin Street, Suite 1350
Tampa, FL 33602
813.882.4373
www.wadetrim.com
Certificate of Authorization No.: 3952

PREPARED UNDER THE SUPERVISION OF:

Ricardo G Borromeo, P.E. — 67101 LICENSE NO.

ISSUED FOR:
100% DESIGN 11-20-2018

CITY OF TAMPA MISCELLANEOUS PUMP IMPROVEMENTS

© Wade Trim Group, Inc.

PROJECT MANAGER:JOHN PACIFICI
C:\PW_WORK2\D0861421\GCS-PLTS-COVER-GRECO.DWG - G-1 GRECO - FIELD BOOK INFORMATION:- PLOTTED 11/20/2018 3:10 PM BY STARK, THOMAS

LEGEND

EX SEWERS	UP TO 36" AND SMALLER	36" AND LARGER
EX FORCE MAIN		
EX SAN SEWER & MANHOLES		
EX STORM & SEWER MANHOLES		
PROP SEWERS		
PROP FORCE MAIN		
PROP SANITARY SEWER & MAHOLES		
PROP STORM SEWER & MANHOLES		

OTHER FEATURES

RIGHT OF WAY LINE — R/W
EDGE OF PAVEMENT
WATER LINE
GAS LINE
ELECTRICAL CABLE OR DUCT
TELEPHONE CABLE OR DUCT
TV CABLE
VALVE, AIR RELEASE VALVE
HYDRANT
CATCH BASIN, GRATE
POWER POLE
TELEPHONE POLE
GUY POLE
GUY WIRE
VALVE VAULT — V
WATER METER — M
ELECTRICAL MANHOLE OR VAULT — E
TELEPHONE MANHOLE OR VAULT — T
TRAFFICE BOX OR VAULT — TR
BUILDING LIMIT — 1236
PROPERTY OWNERSHIP
FENCE
CONIFER — 6"
PALM — 8"
OAK — 10"
OTHER — 12"
SHRUB
HEDGE
RAILROAD TRACKS
IRON PIPE
CONTROL POINT
CONCRETE MONUMENT
OPEN DITCHES
EXISTING WYE
PROPOSED WYE
CLEAN OUT — CO

ABBREVIATIONS

AIR RELEASE VALVE	ARV	MAINTENANCE OF TRAFFIC	MOT
APPROXIMATE LOCATION	AL	MANHOLE	MH or M
BENCH MARK	BM	PLUG VALVE	PV
BURIED TELEPHONE	BT	POINT of INTERSECTION	PI
CONCRETE PIPE	CP	POLYVINYL CHLORIDE PIPE	PVC
DIAMETER RATIO	DR	REINFORCED CONCRETE PIPE	RCP
DUCTILE IRON PIPE	DIP	RESTRAINED MECHANICAL JOINT	RMJ
EDGE OF PAVEMENT	EOP	RIGHT of WAY	R/W
FIBER OPTIC CABLE	FOC	TOP of PIPE	TOP
FLORIDA DEPT. OF TRANSPORTATION	FDOT	VERIFIED VERT. AND HORZ. LOCATION	Vvh
FORCE MAIN	FM	VITRIFIED CLAY PIPE	VCP
HIGH DENSITY POLYETHYLENE PIPE	HDPE	WASTEWATER	WW
EL INVERT ELEVATION	IE or INV		

GRECO SOFTBALL COMPLEX PS
PROJECT LOCATION
11000 N 50TH ST

GRECO SOFTBALL COMPLEX PS LOCATION MAP

N.T.S

PAGE INDEX OF PLANS

SHEET NO.	SHEET DESCRIPTION
1	COVER SHEET
2	LEGEND, INDEX AND LOCATION
3	GENERAL NOTES
4	EXISTING AND PROPOSED SITE PLANS – GRECO SOFTBALL COMPLEX
5	DEMOLITION PLAN AND SECTION VIEW – GRECO SOFTBALL COMPLEX
6	PROPOSED PLAN VIEW – GRECO SOFTBALL COMPLEX
7	PROPOSED SECTION VIEW – GRECO SOFTBALL COMPLEX
8	DETAIL SHEET (1 OF 3)
9	DETAIL SHEET (2 OF 3)
10	DETAIL SHEET (3 OF 3)
E1	ELECTRICAL SYMBOL LEGEND (SHT. 1 OF 2)
E2	ELECTRICAL SYMBOL LEGEND (SHT. 2 OF 2)
E3	GENERAL NOTES AND SCOPE OF WORK
E4	SITE PLAN
E5	NOT USED
E6	NOT USED
E7	GRECO SOFTBALL COMPLEX PUMP STATION ONE LINE DIAGRAM
E8	ELECTRICAL SCHEMATIC (1 OF 4) MOTOR CONTROL PANEL
E9	ELECTRICAL SCHEMATIC (2 OF 4) PUMP CONTROL PANEL
E10	ELECTRICAL SCHEMATIC (3 OF 4) MOTOR CONTROL PANEL
E10A	ELECTRICAL SCHEMATIC (4 OF 4) MOTOR CONTROL PANEL
E11	MCP TO PCP INTERCONNECTION WIRING DIAGRAM
E12	ELECTRICAL SCHEMATIC LEGEND (SHT. 1 OF 2)
E13	ELECTRICAL SCHEMATIC LEGEND (SHT. 2 OF 2)
E14	PARTS SCHEDULE (SHT. 1 OF 2)
E15	PARTS SCHEDULE (SHT. 2 OF 2)
E16	ELECTRICAL DETAILS (SHT. 1 OF 5)
E17	ELECTRICAL DETAILS (SHT. 2 OF 5)
E18	ELECTRICAL DETAILS (SHT. 3 OF 5)
E18A	ELECTRICAL DETAILS (SHT. 4 OF 5)
E18B	ELECTRICAL DETAILS (SHT. 5 OF 5)
E18C	ELECTRICAL KEYNOTES
E19	PUMP CONTROL PANEL DETAILS
E20	MOTOR CONTROL PANEL DETAILS
E21	PM1 ENCLOSURE DETAIL

PROJECT MANAGER: John Pacifici
C:\PW_WORK2\D0861421\CSP-PLTS-LEGEND_GRECO.DWG – (2) LEGEND – FIELD BOOK INFORMATION:– PLOTTED 11/20/2018 3:10 PM BY STARK, THOMAS

REV#	DATE	DESCRIPTION	BY

RICARDO G. BORROMEO, P.E.
FLORIDA LICENSE NO. 67101

WADE TRIM
201 North Franklin Street, Suite 1350
Tampa, FL 33602
813.882.4373
www.wadetrim.com
Certificate of Authorization No.: 3952

CITY OF TAMPA, FLORIDA
GRECO PUMP STATION
REHABILITATION

LEGEND, INDEX AND LOCATION

ISSUED FOR:	DATE:	BY:
90% PLANS	7-16-18	RGB
100% PLANS	11-20-18	RGB

JOB NO. TPA2007-01M

SHEET 2

© Wade Trim Group, Inc.

Greco PS Rehabilitation

DEMOLITION NOTES

D–1 SALVAGEABLE MATERIAL, AS DETERMINED BY DEPARTMENT PERSONNEL, SHALL BE DELIVERED TO A LOCATION DESIGNATED BY THE CITY. NON–SALVAGEABLE MATERIALS ARE TO BE REMOVED FROM THE SITE AND PROPERLY DISPOSED OF AT THE CONTRACTORS EXPENSE.

D–2 THE CONSTRUCTION SITES SHALL BE MAINTAINED IN AS NEAT AND ORDERLY CONDITION AS POSSIBLE DURING CONSTRUCTION OPERATIONS. SITES SHALL BE SECURED WITH TEMPORARY FENCING AND STRUCTURES DURING HOURS WHEN CONTRACTOR IS NOT PRESENT TO ENSURE SAFETY OF CITY EMPLOYEES AND THE PUBLIC.

GENERAL NOTES

G–1 CONTRACTOR SHALL COORDINATE ALL CONSTRUCTION ACTIVITIES WITH THE WASTEWATER INSPECTOR, WASTEWATER PERSONNEL AND PUMPING STATION OPERATIONS.

G–2 CONTRACTOR IS RESPONSIBLE FOR OBTAINING ALL NECESSARY RIGHT–OF–WAY PERMITS AND BUILDING PERMITS FOR THE PUMP STATION WORK.

G–3 THE CITY WILL OBTAIN ALL NECESSARY FDEP WASTEWATER PERMITS.

G–4 CONTRACTOR SHALL CALL SUNSHINE (1–800–432–4770) AT LEAST 48 HOURS PRIOR TO ANY CONSTRUCTION ACTIVITY.

G–5 AFTER WET WELL IS DEWATERED, THE CONTRACTOR SHALL CLEAN WET WELL OF ALL DEBRIS. DEBRIS MAY BE DELIVERED AND DISPOSED OF AT THE CITY OF TAMPA HOWARD F. CURREN AWTP, 2700 MARITIME BOULEVARD, TAMPA, FL 33605.

G–6 TWO NEW PUMPS PER STATION SHALL BE SUPPLIED FOR THIS PROJECT. PROPOSED PUMPS ARE FLYGT PUMPS, AS SHOWN ON THE SHEETS HEREIN. ALL PROPOSED PUMP BASES SHALL BE 4–INCH DIAMETER DISCHARGE ELBOWS.

G–7 IT IS THE ENGINEERS INTENT THAT CONTINUOUS SERVICE WILL BE MAINTAINED THROUGHOUT THE PROJECT.

G–8 CONTRACTOR SHALL VERIFY QUANTITIES OF ALL NECESSARY PIPES, REDUCERS, FITTINGS, SUPPORTS, AND ANY MISCELLANEOUS BRACKETS.

G–9 DIMENSIONS SHOWN ARE NOT NECESSARILY ACCURATE TO THE DEGREE REQUIRED FOR FABRICATION. EXISTING DIMENSIONS AND VIEWS ARE SHOWN BASED ON THE BEST INFORMATION AVAILABLE. CONTRACTOR SHALL FIELD VERIFY ALL PERTINENT DIMENSIONS AND REFLECT THEM ON DETAILED SHOP DRAWINGS FOR APPROVAL BEFORE ANY FABRICATION.

G–10 SHOP DRAWINGS SHALL BE SUBMITTED AND APPROVED BY THE CITY FOR ALL PROPOSED ITEMS. ALL SUBMITTALS AND SHOP DRAWINGS SHALL BE ORIGINALS OR HIGH QUALITY COPIES (CLEARLY LEGIBLE). NO FAXED SHEETS OR POOR QUALITY COPIES WILL BE ACCEPTED FOR SUBMITTAL REVIEW.

G–11 PUMP DISCHARGE PIPING IN THE WET WELL SHALL BE 4–INCH DIAMETER 316 STAINLESS STEEL.

G–12 PLUG VALVES SHALL BE DEZURIK, PEF 100% PORT, ECCENTRIC PLUG VALVES OR APPROVED EQUAL. ALL ABOVE GROUND PLUG VALVES SHALL BE PROVIDED WITH 2" NUTS AND NO HANDWHEELS.

G–13 CHECK VALVES SHALL BE DEZURIK APCO RUBBER FLAPPER SWING CHECK VALVES, SERIES 100, MODEL 104P3. THIS EQUIPMENT IS A STANDARDIZED ITEM AT THIS FACILITY AND NO "OR EQUAL" SUBMITTALS WILL BE CONSIDERED.

G–14 ALL HARDWARE, UNLESS OTHERWISE NOTED, SHALL BE TYPE 316 STAINLESS STEEL.

G–15 PIPE SUPPORTS SHALL BE CONSTRUCTED AS SHOWN IN THE PIPE SUPPORT DETAIL.

G–16 ALL CEMENTITIOUS CONCRETE AND GROUT, UNLESS OTHERWISE NOTED, SHALL BE CLASS "B", 4000 PSI COMPRESSIVE STRENGTH AT 28 DAYS. ALL REINFORCING STEEL SHALL BE GRADE 60.

G–17 OSHA STANDARD SAFETY EQUIPMENT SUCH AS SAFETY HARNESSES, GAS MONITORS, LOWER EXPLOSIVE LIMIT (LEL) DETECTORS, BREATHING APPARATUS, ETC. SHALL BE UTILIZED WHERE THE WORK DICTATES THEIR USE.

G–18 BACKFILL (NO CLAY OR CLAYEY MATERIAL) SHALL BE COMPACTED IN 6–INCH LAYERS (MAX.) TO 98% MAXIMUM DRY DENSITY OF MODIFIED PROCTOR IN CONFORMANCE WITH AASHTO T–180, METHOD A.

G–19 ALL STAINLESS STEEL PARTS TO BE WELDED SHALL BE THE LOW–CARBON VERSION OF THE GRADE OF STAINLESS STEEL THAT IS CALLED FOR, SUCH AS: T–316L OR T–304L.

G–20 ALL CONCRETE PAVEMENT, UNLESS OTHERWISE NOTED, SHALL BE MIN 8" THICK CONCRETE WITH 4X4 W6 x W6 WWF. CONCRETE SHALL BE CONSTRUCTED ON COMPACTED SUBBASE (MINIMUM 98% MODIFIED PROCTOR) WITH 1.5" DEEP CONTROL JOINTS SAWCUT @ 15' MAX, CUT WITHIN 12 HRS OF CONCRETE PLACEMENT.

G–21 CONTRACTOR TO SUBMIT METHOD FOR 100% WATERTIGHT SEALING AT PIPE PENETRATIONS THROUGH STRUCTURES. PROPOSED LINK SEAL OR APPROVED EQUAL.

G–22 CONTRACTOR SHALL PROVIDE A REDUCED PRESSURE BACKFLOW–PREVENTION DEVICE IN WATER SERVICE LINE, AS SHOWN IN DETAILS, AT A PLACE TO BE SPECIFIED DURING CONSTRUCTION. BACKFLOW PREVENTION DEVICE SHALL BE 1" WILKINS, MODEL #975 XL, OR EQUAL.

G–23 ALL DIP PIPE AND FITTING SHALL BE CLASS 53 WITH PROTECTO 401 INTERIOR COATING.

G–24 REMOVE ALL REMNANTS OF COAL TAR EPOXY IN EXISTING WET WELLS PRIOR TO LINING.

G–25 ALL METAL PIPE, FITTINGS, VALVES, ETC. SHALL RECIEVE:
1) SHOP COAT – ONE COAT, 4–6 MILS (DRY) TNEMEC N140–1211 EPOXY PRIMER.
2) FIELD COAT – ONE COAT, 5–7 MILS (DRY) TNEMEC SERIES 446 PERMA–SHIELD MCU
3) FIELD COAT
A) ABOVE GRADE : ONE COAT, 4–6 MILS (DRY) TNEMEC 1074U ENDURASHIELD (WITH FACTORY ADDED UV BLOCKER)
B) BELOW GRADE : ONE COAT, 5–7 MILS (DRY) TNEMEC SERIES 446 PERMA–SHIELD MCU

G–26 ALL CONCRETE TOP SLABS AND RISER EXTENSIONS SHALL BE 4,000 PSI, CLASS B, CAST IN PLACE CONCRETE. REBAR REINFORCEMENT SHALL BE #6 AT 6" EW. TWO (2) #5 DIAGONAL BARS, EACH 3–FT LONG, SHALL BE PLACED AT EACH CORNER OF EVERY TOP SLAB OPENING.

G–27 CONTRACTOR WILL BE REQUIRED TO BYPASS PUMP STATION DURING CONSTRUCTION PER SPECIFICATIONS REQUIREMENTS.

BUILDING CODE REFERENCES:

FLORIDA BUILDING CODE, 6TH EDITION, 2017

CITY OF TAMPA CODE OF ORDINANCES, CHAPTER 5 BUILDING CODE

NATIONAL FIRE PROTECTION ASSOCIATION (NFPA), SERIES 70

NATIONAL ELECTRICAL CODE (NEC), 2014 EDITION

© Wade Trim Group, Inc.

AERIAL
N.T.S

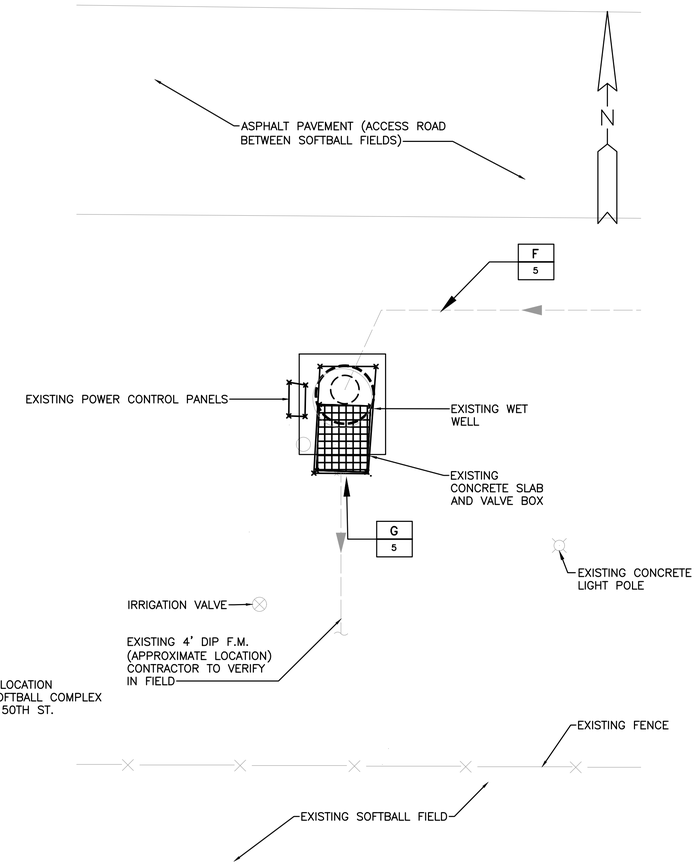

EXISTING SITE AND PHOTO KEY PLAN
N.T.S

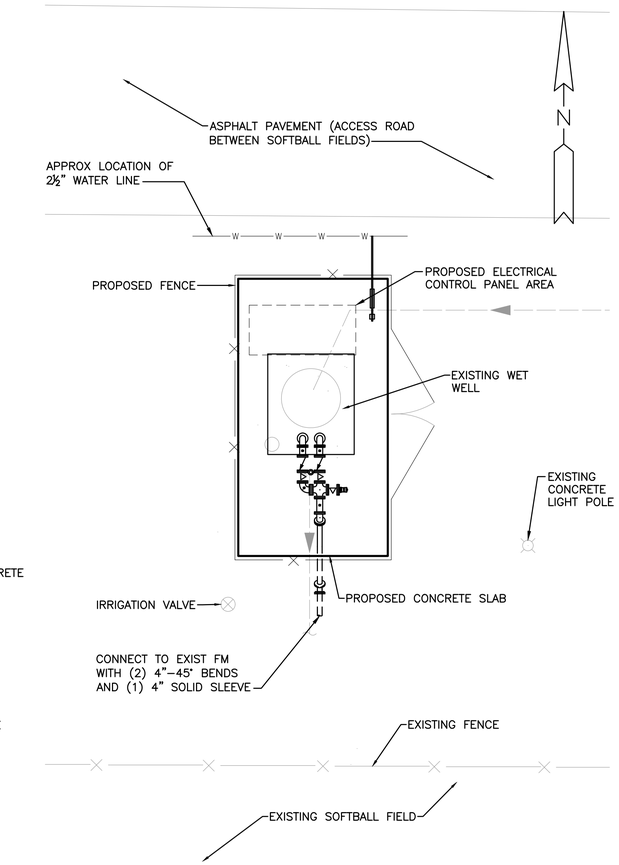

PROPOSED SITE PLAN
N.T.S

PHOTOS

APPROXIMATE COORDINATES:
28°02'58.8" N
82°24'15.4" W

REV#	DATE	DESCRIPTION	BY

RICARDO G BORROMEO, P.E.
FLORIDA LICENSE NO. 67101

WADE TRIM
201 North Franklin Street, Suite 1350
Tampa, FL 33602
813.882.4373
www.wadetrim.com
Certificate of Authorization No.: 3952

CITY OF TAMPA, FLORIDA
GRECO PUMP STATION
REHABILITATION

EXISTING AND PROPOSED SITE PLANS
GRECO SOFTBALL COMPLEX

ISSUED FOR:	DATE:	BY:
90% PLANS	7-16-18	RGB
100% PLANS	11-20-18	RGB

JOB NO.: TPA2007-01M
SHEET 4

© Wade Trim Group, Inc.

Greco PS Rehabilitation

PROJECT MANAGER:John Pacifici
C:\PW_WORK2\D0861421\CSP-PLTS-GRECO.DWG - (4) SITE PLAN GRECO - FIELD BOOK INFORMATION:- PLOTTED 11/20/2018 3:11 PM BY STARK, THOMAS

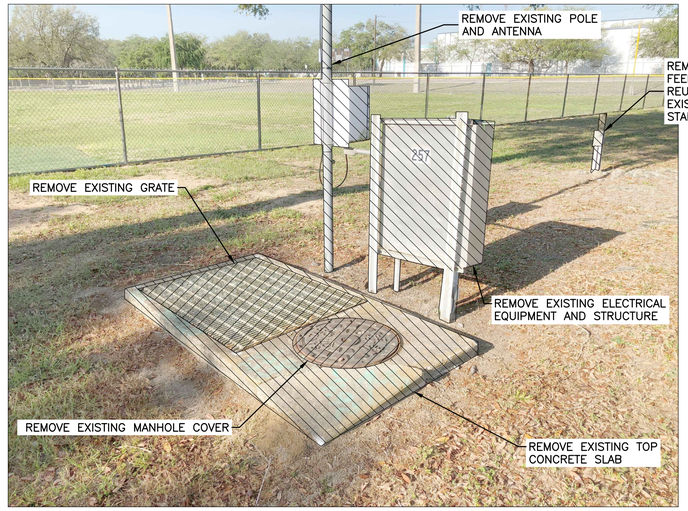

PHOTO F

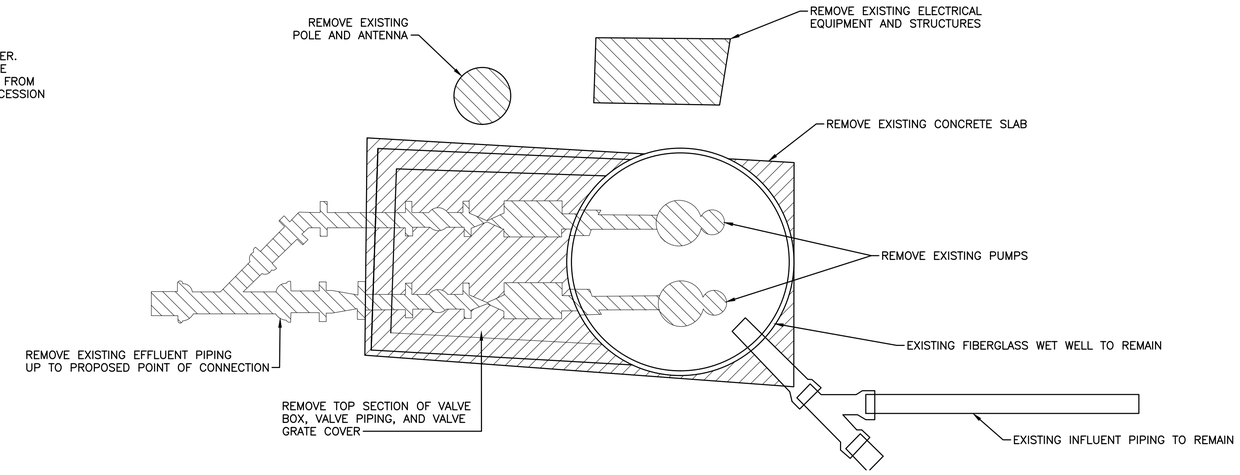

PLAN VIEW

SCALE: 3/4"=1'-0"
(34" X 22" SHEET SIZE)

HATCHED AREAS ON THIS SHEET INDICATE PIPING, FITTINGS, VALVES, STRUCTURES, EQUIPMENT AND OTHER APPURTENANCES TO BE REMOVED.

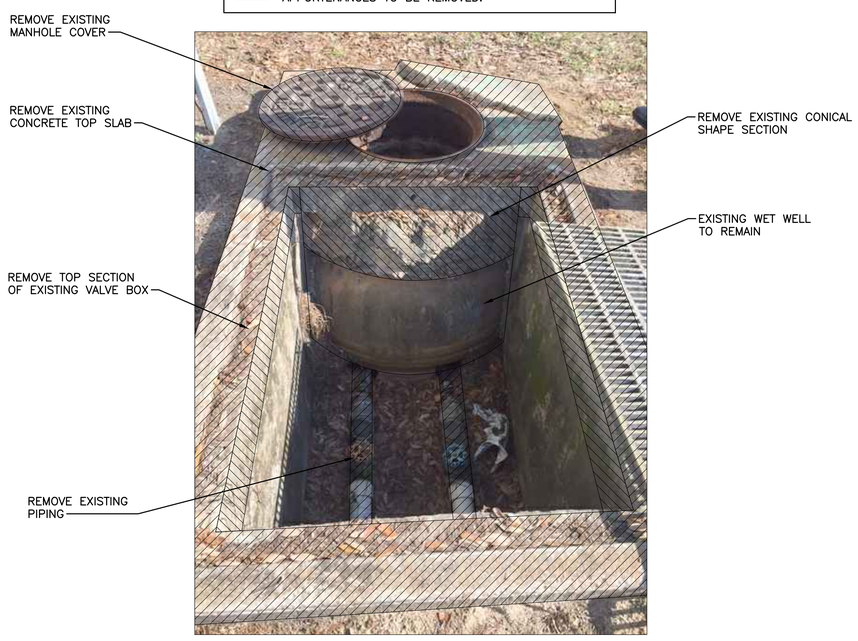

PHOTO G

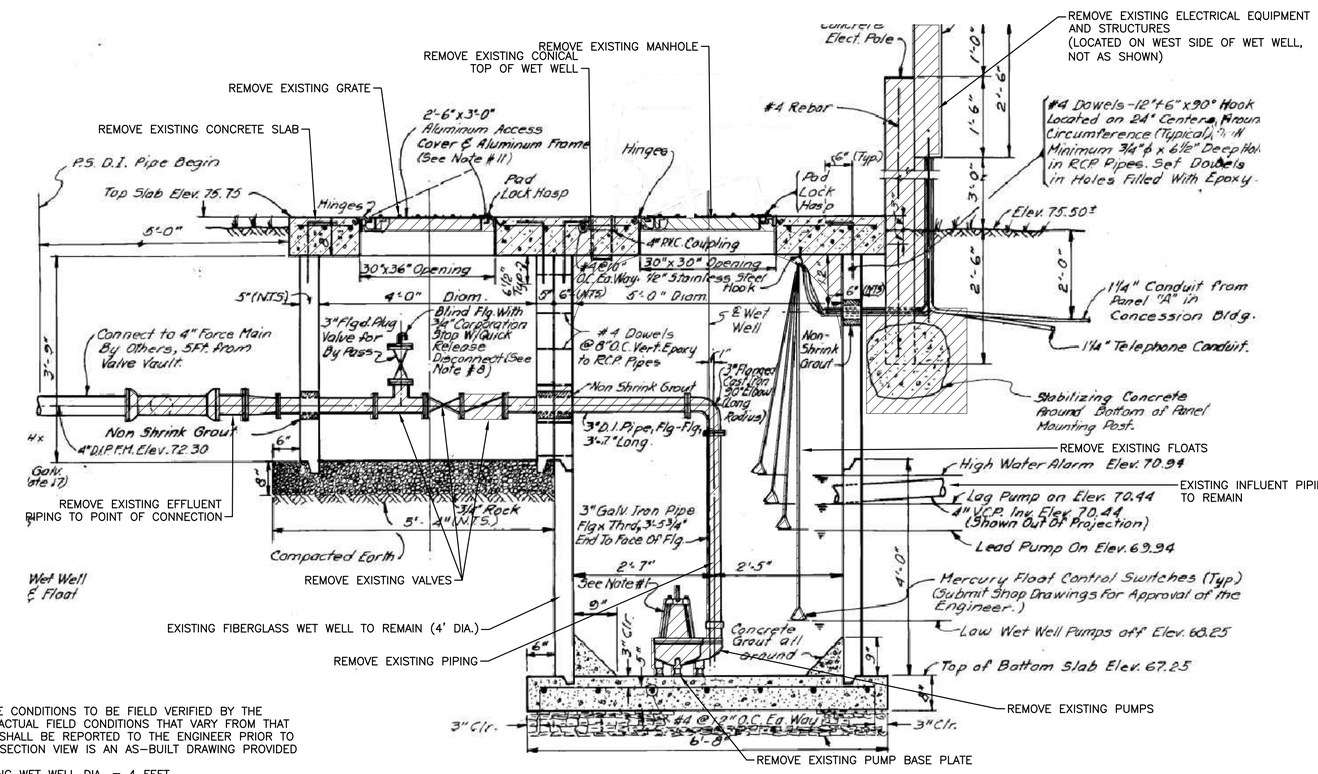

SECTION VIEW

SCALE: 3/4"=1'-0"
(34" X 22" SHEET SIZE)

NOTE: ALL SITE CONDITIONS TO BE FIELD VERIFIED BY THE CONTRACTOR. ACTUAL FIELD CONDITIONS THAT VARY FROM THAT SHOWN HERE SHALL BE REPORTED TO THE ENGINEER PRIOR TO ANY ACTIVITY. SECTION VIEW IS AN AS-BUILT DRAWING PROVIDED BY CITY.
ACTUAL EXISTING WET WELL DIA. = 4 FEET
EXISTING TOP OF WET WELL IS CONICAL SHAPE
ELECTRICAL LIES TO THE EAST OF WET WELL (NOT NORTH)

REV#	DATE	DESCRIPTION	BY

RICARDO G BORROMEO, P.E.
FLORIDA LICENSE NO. 67101

WADE TRIM
201 North Franklin Street, Suite 1350
Tampa, FL 33602
813.882.4373
www.wadetrim.com
Certificate of Authorization No.: 3952

CITY OF TAMPA, FLORIDA
GRECO PUMP STATION
REHABILITATION

DEMOLITION PLAN AND SECTION VIEW
GRECO SOFTBALL COMPLEX

ISSUED FOR: DATE: BY:
90% PLANS 7-16-18 RGB
100% PLANS 11-20-18 RGB

JOB NO. TPA2007-01M
SHEET 5

PROJECT MANAGER:John Pacifici
C:\PW_WORK2\D0861421\CSP-PLTS-GRECO.DWG - (5) DEMO GRECO - PLOTTED 11/20/2018 3:11 PM BY STARK, THOMAS
FIELD BOOK INFORMATION:-
Greco PS Rehabilitation
© Wade Trim Group, Inc.

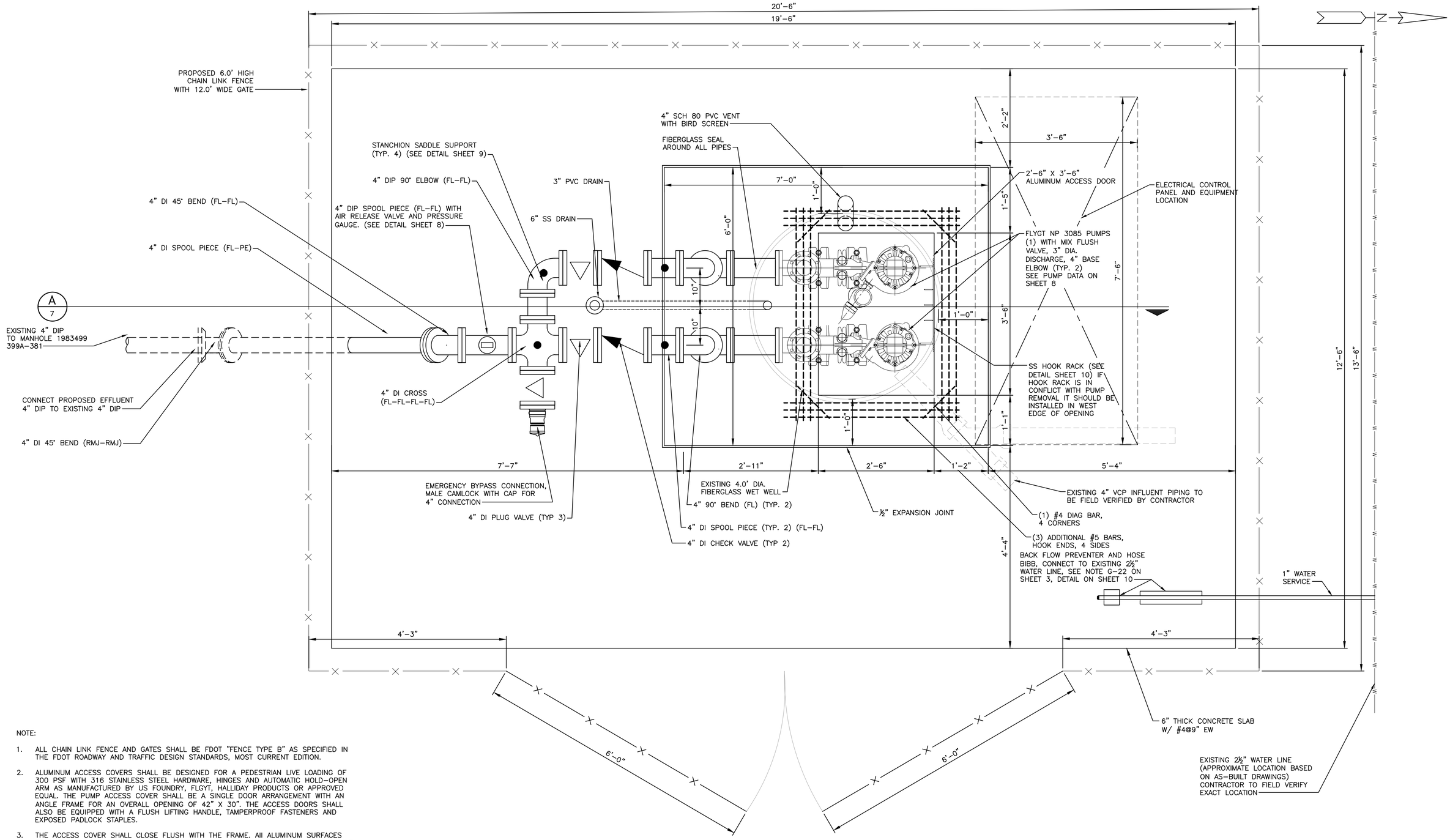

NOTE:

1. ALL CHAIN LINK FENCE AND GATES SHALL BE FDOT "FENCE TYPE B" AS SPECIFIED IN THE FDOT ROADWAY AND TRAFFIC DESIGN STANDARDS, MOST CURRENT EDITION.
2. ALUMINUM ACCESS COVERS SHALL BE DESIGNED FOR A PEDESTRIAN LIVE LOADING OF 300 PSF WITH 316 STAINLESS STEEL HARDWARE, HINGES AND AUTOMATIC HOLD-OPEN ARM AS MANUFACTURED BY US FOUNDRY, FLGYT, HALLIDAY PRODUCTS OR APPROVED EQUAL. THE PUMP ACCESS COVER SHALL BE A SINGLE DOOR ARRANGEMENT WITH AN ANGLE FRAME FOR AN OVERALL OPENING OF 42" X 30". THE ACCESS DOORS SHALL ALSO BE EQUIPPED WITH A FLUSH LIFTING HANDLE, TAMPERPROOF FASTENERS AND EXPOSED PADLOCK STAPLES.
3. THE ACCESS COVER SHALL CLOSE FLUSH WITH THE FRAME. All ALUMINUM SURFACES THAT CONTACT CONCRETE SHALL BE COATED WITH TWO COATS OF COAL TAR EPOXY OR BITUMINOUS COATING OR EQUAL. THE CONTRACTOR SHALL SUBMIT SHOP DRAWINGS DETAILING THE INSTALLATION AND CONFIGURATION OF THE ACCESS COVERS.
4. CONTRACTOR SHALL PLACE #57 AGGREGATE 3" DEEP, BETWEEN EDGE OF CONCRETE SLAB AND FENCE.

PLAN VIEW

SCALE: 3/4"=1'-0"
(34" X 22" SHEET SIZE)

REV#	DATE	DESCRIPTION	BY

RICARDO G BORROMEO, P.E.
FLORIDA LICENSE NO. 67101

WADE TRIM
201 North Franklin Street, Suite 1350
Tampa, FL 33602
813.882.4373
www.wadetrim.com
Certificate of Authorization No.: 3952

CITY OF TAMPA, FLORIDA
GRECO PUMP STATION
REHABILITATION

PROPOSED PLAN VIEW
GRECO SOFTBALL COMPLEX

ISSUED FOR:	DATE:	BY:
90% PLANS	7-16-18	RGB
100% PLANS	11-20-18	RGB

JOB NO. TPA2007-01M

SHEET 6

Greco PS Rehabilitation

© Wade Trim Group, Inc.

PROJECT MANAGER:John Pacifici
C:\PW_WORK2\D0861421\CSP-PLTS-GRECO.DWG - (6) PROPOSED GRECO - PLOTTED 12/5/2018 6:48 AM BY MCKONE, DAVE
FIELD BOOK INFORMATION:-

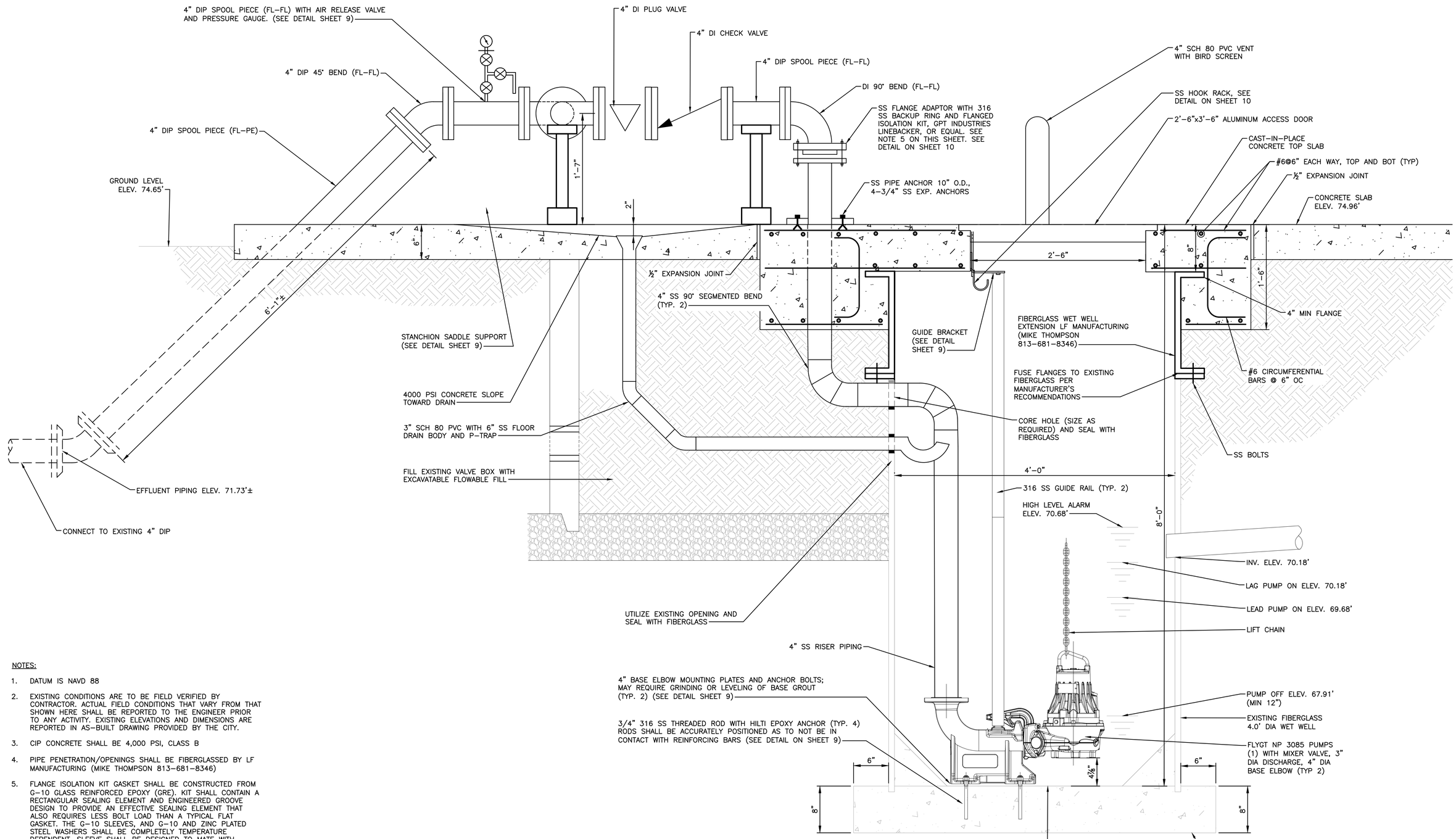

SECTION A / 6

SCALE: 1 1/2"=1'-0" (34"x22" SHEET SIZE)

NOTES:

1. DATUM IS NAVD 88
2. EXISTING CONDITIONS ARE TO BE FIELD VERIFIED BY CONTRACTOR. ACTUAL FIELD CONDITIONS THAT VARY FROM THAT SHOWN HERE SHALL BE REPORTED TO THE ENGINEER PRIOR TO ANY ACTIVITY. EXISTING ELEVATIONS AND DIMENSIONS ARE REPORTED IN AS-BUILT DRAWING PROVIDED BY THE CITY.
3. CIP CONCRETE SHALL BE 4,000 PSI, CLASS B
4. PIPE PENETRATION/OPENINGS SHALL BE FIBERGLASSED BY LF MANUFACTURING (MIKE THOMPSON 813-681-8346)
5. FLANGE ISOLATION KIT GASKET SHALL BE CONSTRUCTED FROM G-10 GLASS REINFORCED EPOXY (GRE). KIT SHALL CONTAIN A RECTANGULAR SEALING ELEMENT AND ENGINEERED GROOVE DESIGN TO PROVIDE AN EFFECTIVE SEALING ELEMENT THAT ALSO REQUIRES LESS BOLT LOAD THAN A TYPICAL FLAT GASKET. THE G-10 SLEEVES, AND G-10 AND ZINC PLATED STEEL WASHERS SHALL BE COMPLETELY TEMPERATURE DEPENDENT. SLEEVE SHALL BE DESIGNED TO MATE WITH SEPARATING WASHERS AND WILL BE OF A LENGTH SUCH THAT THE SLEEVES EXTEND INTO ONE AND ON HALF WASHER THICKNESS ON EACH SIDE OF THE FLANGE.

REV#	DATE	DESCRIPTION	BY

RICARDO G. BORROMEO, P.E.
FLORIDA LICENSE NO. 67101

WADE TRIM
201 North Franklin Street, Suite 1350
Tampa, FL 33602
813.882.4373
www.wadetrim.com
Certificate of Authorization No.: 3952

CITY OF TAMPA, FLORIDA
GRECO PUMP STATION
REHABILITATION

PROPOSED SECTION VIEW
GRECO SOFTBALL COMPLEX

ISSUED FOR:	DATE:	BY:
90% PLANS	7-16-18	RGB
100% PLANS	11-20-18	RGB

JOB NO. TPA2007-01M

SHEET 7

© Wade Trim Group, Inc.

Greco PS Rehabilitation

PROJECT MANAGER: John Pacifici
C:\PW_WORK2\D0861421\CSP-PLTS-GRECO.DWG - (7) PROPOSED GRECO - PLOTTED 11/20/2018 3:11 PM BY STARK, THOMAS
FIELD BOOK INFORMATION:-

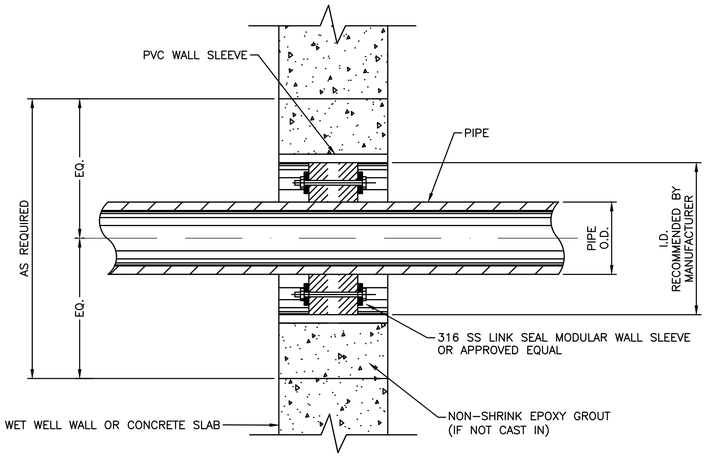

LINK SEAL DETAIL

N.T.S.

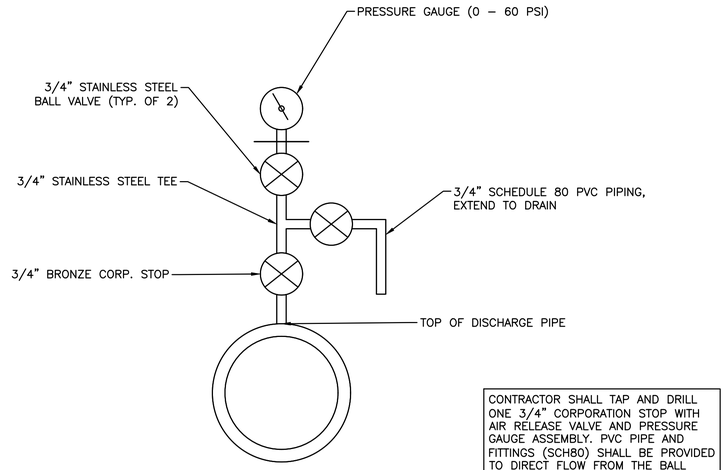

CONTRACTOR SHALL TAP AND DRILL ONE 3/4" CORPORATION STOP WITH AIR RELEASE VALVE AND PRESSURE GAUGE ASSEMBLY. PVC PIPE AND FITTINGS (SCH80) SHALL BE PROVIDED TO DIRECT FLOW FROM THE BALL VALVE DOWNWARD TO THE FLOOR.

AIR RELEASE AND PRESSURE GAUGE ASSEMBLY

N.T.S.

NP 3085 MT 3~ Adaptive 463

Performance curve

FLYGT

Pump

Discharge Flange Diameter	3 1/8 inch
Suction Flange Diameter	80 mm
Impeller diameter	$5^{7}/_{16}$"
Number of blades	2

Motor

Motor #	N3085.060 15-10-4AL-W 3hp
Stator variant	12
Frequency	60 Hz
Rated voltage	230 V
Number of poles	4
Phases	3~
Rated power	3 hp
Rated current	8.7 A
Starting current	44 A
Rated speed	1700 rpm

Power factor	
1/1 Load	0.83
3/4 Load	0.77
1/2 Load	0.66
Motor efficiency	
1/1 Load	78.1 %
3/4 Load	79.1 %
1/2 Load	77.4 %

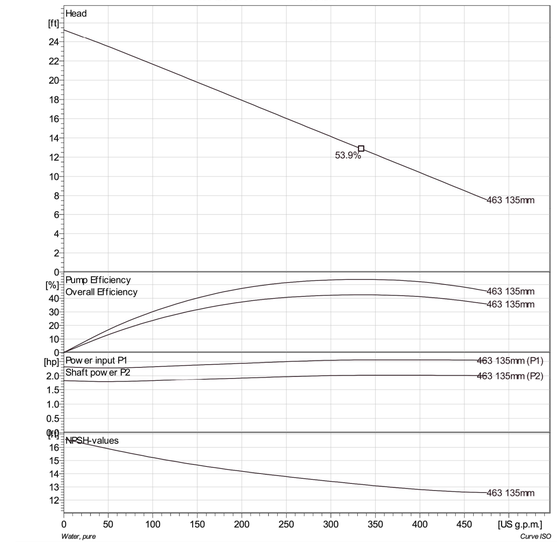

PUMP CURVE DATA

PROJECT MANAGER: John Pacifici
C:\PW_WORK2\D0861421\CSP-PLTS-DETAILS_GRECO.DWG – (8)-DETAILS – PLOTTED 11/20/2018 3:11 PM BY STARK, THOMAS FIELD BOOK INFORMATION:–

REV#	DATE	DESCRIPTION	BY

RICARDO G. BORROMEO, P.E.
FLORIDA LICENSE NO.: 67101

WADE TRIM
201 North Franklin Street, Suite 1350
Tampa, FL 33602
813.882.4373
www.wadetrim.com
Certificate of Authorization No.: 3952

CITY OF TAMPA, FLORIDA
GRECO PUMP STATION
REHABILITATION

DETAIL SHEET (1 OF 3)

ISSUED FOR:	DATE:	BY:
90% PLANS	7-16-18	RGB
100% PLANS	11-20-18	RGB

JOB NO.: TPA2007-01M

SHEET 8

© Wade Trim Group, Inc.

Greco PS Rehabilitation

PUMP BASE ELL MOUNTING PLATE DIMENSIONS					
A	B	C	D	E	F
20"	16"	8"	4"	9 7/8"	1/2"

NOTES:
1. INSTALL DOUBLE NUTS ON ALL EIGHT (8) THREADED RODS.
2. THE PLATE EDGES AND ALL HOLES SHALL BE GROUND SMOOTH TO REMOVE ALL BURRS.
3. DIMENSIONS FOR "C" & "E" ARE FOR FLYGT PUMPS, INC. BASE ELLS.

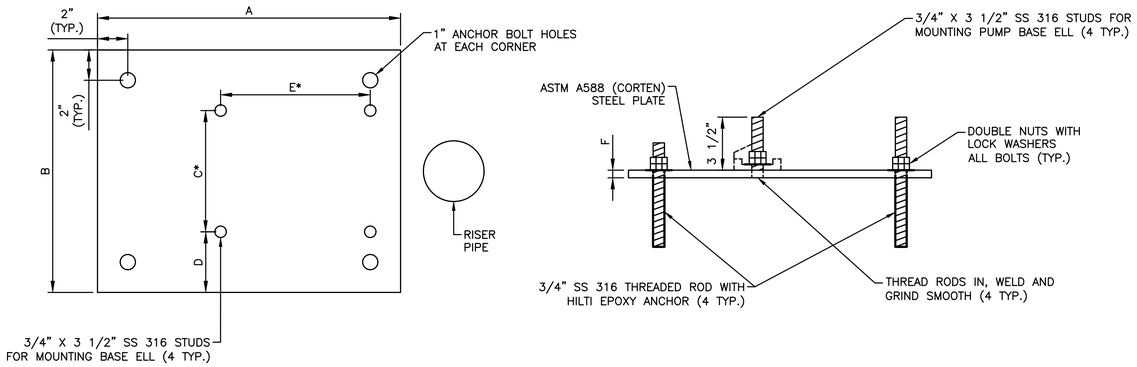

PLAN

PROFILE

PUMP BASE ELL MOUNTING PLATE DETAIL

N.T.S.

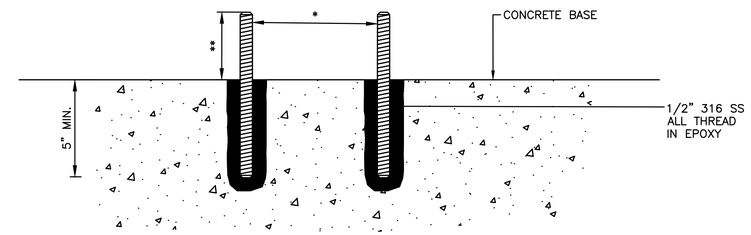

* ALIGNMENT OF ANCHOR BOLTS SHALL BE AS RECOMMENDED BY PUMP MANUFACTURER.

** CONTRACTOR SHALL PROVIDE A MINIMUM 1/2 INCH BOLT PROTRUSION ABOVE THE FINAL NUT LOCATION AFTER THE NUT IS TIGHTENED TO MANUFACTURE'S RECOMMENDATION.

ANCHOR BOLT DETAIL

N.T.S.

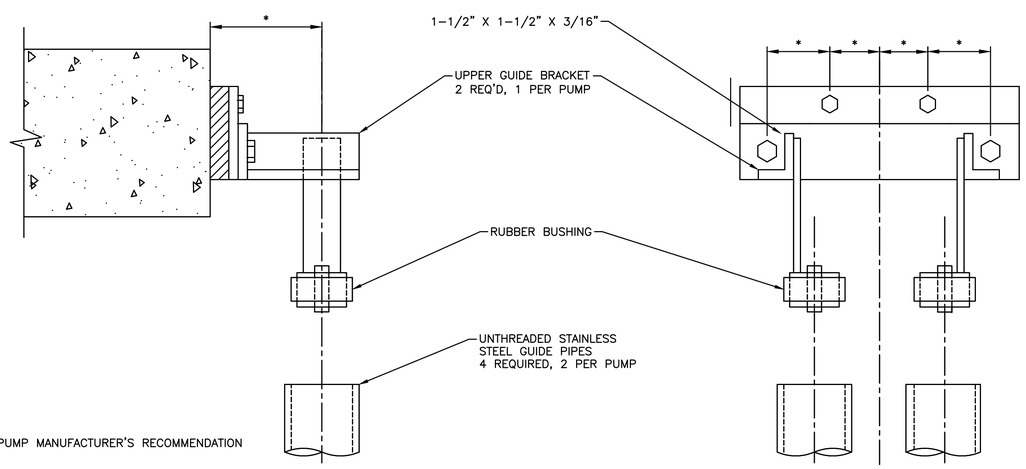

* PER PUMP MANUFACTURER'S RECOMMENDATION

GUIDE BRACKET DETAIL (SUPPLIED WITH PUMPS)

N.T.S.

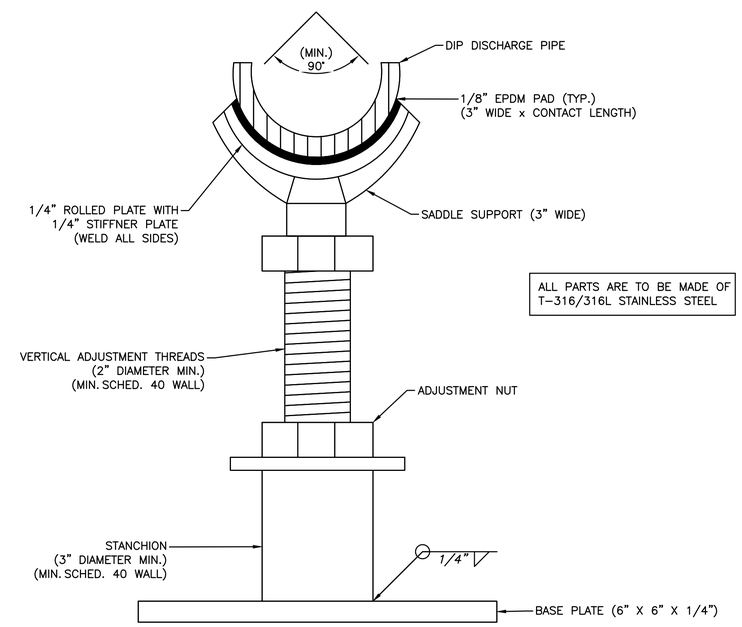

SECTION VIEW – STAINLESS STEEL STANCHION SADDLE SUPPORT

N.T.S.

PROJECT MANAGER: John Pacifici
C:\PW_WORK2\D0861421\CSP-PLTS-DETAILS_GRECO.DWG – (9)-DETAILS – FIELD BOOK INFORMATION:– PLOTTED 11/20/2018 3:11 PM BY STARK, THOMAS

REV#	DATE	DESCRIPTION	BY

RICARDO G BORROMEO, P.E.
FLORIDA LICENSE NO. 67101

WADE TRIM
201 North Franklin Street, Suite 1350
Tampa, FL 33602
813.882.4373
www.wadetrim.com
Certificate of Authorization No.: 3952

CITY OF TAMPA, FLORIDA
GRECO PUMP STATION
REHABILITATION

DETAIL SHEET (2 OF 3)

ISSUED FOR:	DATE:	BY:
90% PLANS	7-16-18	RGB
100% PLANS	11-20-18	RGB

JOB NO. TPA2007-01M

SHEET 9

© Wade Trim Group, Inc.

Greco PS Rehabilitation

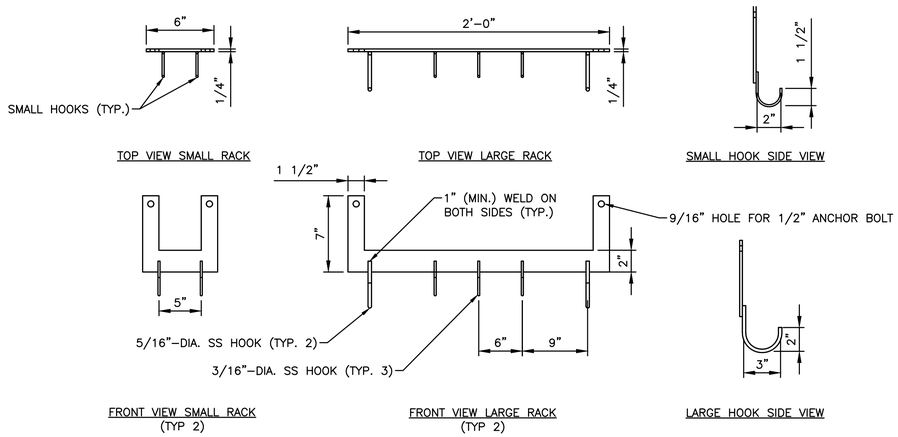

ALL PARTS ARE TO BE MADE OF T-316/316L STAINLESS STEEL

NOTE: INSTALL FLOATS IN A MANNER TO MAINTAIN PROPER OPERATIONAL CLEARANCE.

PROPOSED STAINLESS STEEL HOOK RACKS

N.T.S.

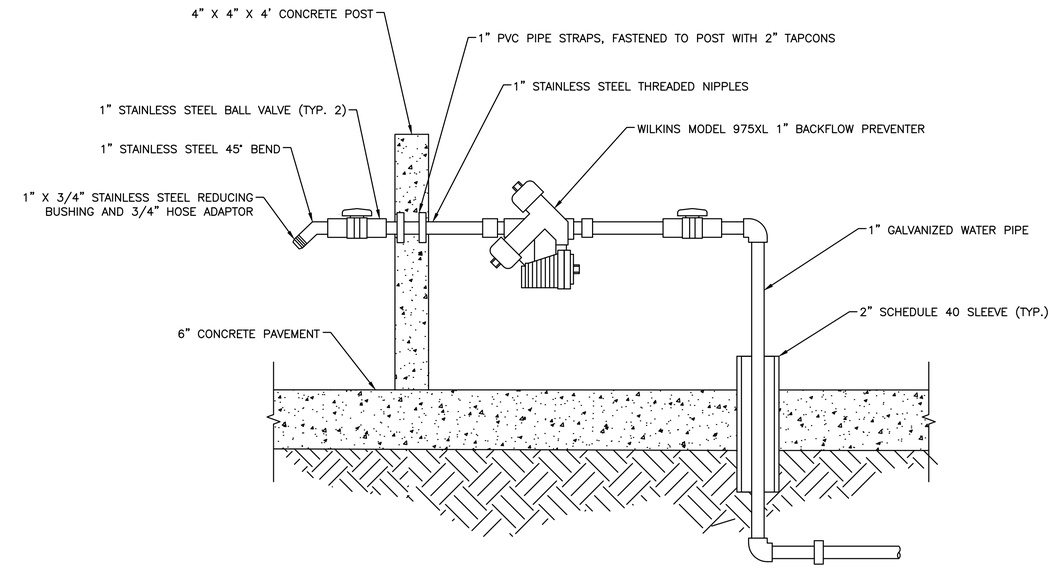

BACKFLOW PREVENTER DETAIL

N.T.S.

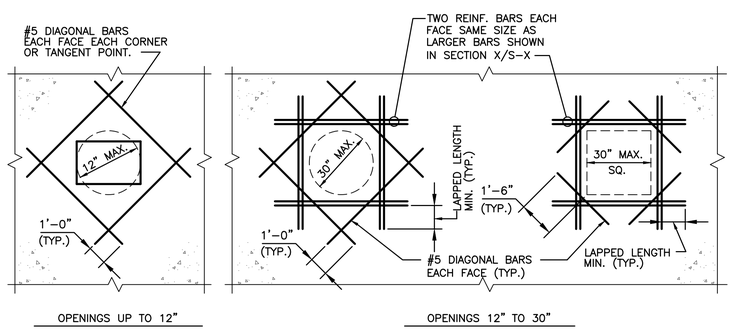

REINFORCEMENT DETAILS FOR SMALL OPENINGS

N.T.S.

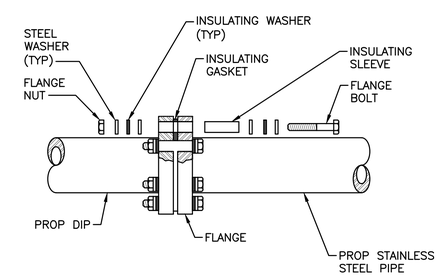

INSULATING FLANGE

N.T.S.

PROJECT MANAGER: John Pacifici
C:\PW_WORK2\D0861421\CSP-PLTS-DETAILS_GRECO.DWG - (10) DETAILS - PLOTTED 11/20/2018 3:11 PM BY STARK, THOMAS
FIELD BOOK INFORMATION:-

REV#	DATE	DESCRIPTION	BY

RICARDO G BORROMEO, P.E.
FLORIDA LICENSE NO.: 67101

WADE TRIM
201 North Franklin Street, Suite 1350
Tampa, FL 33602
813.882.4373
www.wadetrim.com
Certificate of Authorization No.: 3952

CITY OF TAMPA, FLORIDA
GRECO PUMP STATION
REHABILITATION

DETAIL SHEET (3 OF 3)

ISSUED FOR:	DATE:	BY:
90% PLANS	7-16-18	RGB
100% PLANS	11-20-18	RGB

JOB NO.: TPA2007-01M
SHEET 10

Greco PS Rehabilitation

© Wade Trim Group, Inc.

ONE LINE DIAGRAM SYMBOLS

600 A — BUS–RATING AS SHOWN

INCOMING LINE

OUTCOMING LINE

DISCONNECTING DEVICE

CONDUCTORS CONNECTED

CONDUCTORS NOT CONNECTED

100A — FUSE–RATING AS SHOWN

100A — SINGLE THROW DISCONNECT SWITCH–RATING AS SHOWN

100A/70A — FUSED DISCONNECT SWITCH–100A SWITCH, 70A FUSE

100A — LOW VOLTAGE AIR CIRCUIT BREAKER WITHOUT TRIP DEVICE 100A FRAME

225A/125A — LOW VOLTAGE AIR CIRCUIT BREAKER WITH 225A FRAME AND 125A TRIP

52 — MEDIUM VOLTAGE DRAWOUT TYPE AIR CIRCUIT BREAKER

GROUND CONNECTION

SPD — LIGHTNING OR SURGE ARRESTOR

SURGE CAPACITOR

POWER TRANSFORMER WITH WINDING CONNECTIONS INDICATED

CPT — CONTROL POWER TRANSFORMER

PT — POTENTIAL TRANFORMER

CT — CURRENT TRANSFORMER

THERMAL OVERLOAD ELEMENT (OL)

5 — SQUIRREL CAGE MOTOR (INDICATE HORSEPOWER)

G — GENERATOR

R — INDICATING LIGHT (R–RED, G–GREEN, A–AMBER, B–BLUE, W–WHITE)

COMBINATION STARTER WITH CONTROL TRANSFORMERS AND OVERLOAD RELAYS AND MOTOR CIRCUIT PROTECTOR

M — FULL VOLTAGE NON REVERSING

F, R — FULL VOLTAGE REVERSING

F, S — FULL VOLTAGE TWO SPEED

SCHEMATIC AND WIRING DIAGRAM SYMBOLS

M — OPERATING COIL

M–MOTOR STARTER	AR– AUXILIARY RELAY
C– CONTACTOR	CR– CONTROL RELAY
F– FORWARD	TR– TIME DELAY RELAY
R– REVERSE	

NORMALLY OPEN CONTACT (N.O.)

NORMALLY CLOSED CONTACT (N.C.)

NORMALLY OPEN CONTACT WITH TIME DELAY CLOSING (ON–DELAY)

INSTANT OPEN– TIME DELAY CLOSED CONTACT (OFF DELAY)

NORMALLY CLOSED CONTACT WITH TIME DELAY OPENING (ON–DELAY)

INSTANT CLOSE– TIME DELAY OPEN CONTACT (OFF DELAY)

R — INDICATING LIGHT– PUSH TO TEST (R–RED, G–GREEN, A–AMBER, B–BLUE, W–WHITE)

H O A — 3–POSITION SELECTOR SWITCH (SHOWN IN "H" POS.)

NORMALLY OPEN PUSHBUTTON–MOMENTARY CONTACT

NORMALLY CLOSED PUSHBUTTON–MOMENTARY CONTACT

DOUBLE CIRCUIT PUSHBUTTON WITH SPRING RETURN TO NORMAL

TRANSFORMER

OL — OVERLOAD RELAY CONTACT

THERMAL OVERLOAD ELEMENT (OL)

ON–OFF SWITCH

G — GROUND BUS

N — NEUTRAL BUS (INSULATED)

SINGLE–POLE CIRCUIT BREAKER

NORMALLY OPEN N.O.	NORMALLY CLOSED N.C.	
		LIMIT SWITCH
		FLOAT SWITCH
		PRESSURE SWITCH
		FLOW SWITCH
		TEMPERATURE

NOTE:

THE SYMBOLS SHOWN COMPRISE A GENERAL LEGEND TO FACILITATE THE USE OF PLANS. REFER TO THE PLANS AND SPECIFICATIONS FOR ITEMS REQUIRED.

PROJECT MANAGER: John Pacifici
C:\PW_WORK2\D0861421\EDG-PLTS-ELECTRICAL LEGEND 1 GRECO.DWG - E1 - PLOTTED 11/20/2018 3:37 PM BY STARK, THOMAS
FIELD BOOK INFORMATION:-

REV#	DATE	DESCRIPTION	BY

ALAN M. SCHWAB, P.E.
FLORIDA LICENSE NO. 61313

WADE TRIM
201 North Franklin Street, Suite 1350
Tampa, FL 33602
813.882.4373
www.wadetrim.com
Certificate of Authorization No.: 3952

CITY OF TAMPA, FLORIDA
GRECO PUMP STATION
REHABILITATION

ELECTRICAL SYMBOL LEGEND (SHT. 1 OF 2)

ISSUED FOR:	DATE:	BY:
90% PLANS	7–16–18	RGB
100% PLANS	11–20–18	RGB

JOB NO. TPA2007–01M
SHEET E1

Greco PS Rehabilitation

© Wade Trim Group, Inc.

POWER AND LIGHTING SYMBOLS

EXPOSED CONDUIT RUN

CONDUIT RUN CONCEALED IN FLOOR OR UNDERGROUND

CONDUIT RUN CONCEALED IN WALLS, ABOVE SUSPENDED CEILING, OR IN ROOF SLAB

CONDUIT WITH HOT, NEUTRAL AND GROUND WIRES (LONG LINE IS NEUTRAL; LONG LINE WITH DOTS DENOTE GROUND)

PNL-1 1,3,5 — HOMERUN TO LIGHTING PANELBOARD (PNL-1 INDICATES PANELBOARD AND 1, 3, 5 INDICATES 20A-1P CKTS. 1, 3 AND 5)

FLEXIBLE LIQUIDTIGHT CONDUIT

CONDUIT-UP (OR TOWARDS VIEWER)

CONDUIT-DOWN (OR AWAY FROM VIEWER)

GROUNDING CONDUCTOR

GROUND ROD

LIGHTNING ROD

CEILING MOUNTED INCANDESCENT OR MERCURY VAPOR FIXTURE. "A" INDICATES FIXTURE TYPE LISTED IN SCHEDULE

WALL MOUNTED LIGHTING FIXTURE

EXIT SIGN

EMERGENCY INCANDESCENT OR MERCURY VAPOR LIGHTING FIXTURE

FLUORESCENT FIXTURE

EMERGENCY FLUORESCENT FIXTURE

POLE MOUNTED LIGHTING FIXTURE

4 — DUPLEX RECEPTACLE- 20 A, 120 V, 3 WIRE (TO PNL- CIRCUIT No.4)

30 A — SINGLE RECEPTACLE - 2 POLE, 3 WIRE, 240V, RATING NOTED

60 A — 3 POLE, 4 WIRE, 240V WELDING OUTLET (60 A)

SINGLE POLE SWITCH

2P — TWO POLE SWITCH

3 — THREE WAY SWITCH

J — OUTLET BOX WITH BLANK COVER

JB — JUNCTION BOX

PB — PULL BOX

TB — TERMINAL BOX

GENERAL SYMBOLS

START-STOP PUSHBUTTON

ON/OFF/L — ON-OFF MAINTAINED CONTACT PUSHBUTTON WITH LOCK ATTACHMENT

S/L — INDICATING LIGHT AND START-STOP PUSHBUTTON WITH LOCK ATTACHMENT ON STOP

RESUME STOP/L — PUSH/PULL BUTTON WITH STOP LOCK. (PULL TO RESUME- PUSH TO STOP)

SELECTOR SWITCH ("HOA" INDICATES HAND, OFF, AND AUTO; "MOR" INDICATES MANUAL, OFF, AND REMOTE; ETC)

I L — ON-OFF SWITCH WITH LOCK ATTACHMENT ON OFF POSITION

FL — FLOW SWITCH

LS — LIMIT SWITCH

P — PRESSURE SWITCH

S — SOLENOID OPERATED VALVE

T — TEMPERATURE SWITCH

F — FLOAT SWITCH

L — LEVEL TRANSMITTER (PRESSURE ANALOG TYPE)

LC — LEVEL TRANSMITTER (FLOAT TYPE)

T — TEMPERATURE TRANSMITTER

FT — FLOW TRANSMITTER

MH — DESIGNATES MOUNTING HEIGHT

WP — DESIGNATES WATERPROOF EQUIPMENT

XP — DESIGNATES EXPLOSIONPROOF EQUIPMENT

MOV — DESIGNATES MOTOR OPERATED VALVE

EX. — DESIGNATES EXISTING EQUIPMENT

PROP. — DESIGNATES PROPOSED EQUIPMENT

NOTE:
THE SYMBOLS SHOWN COMPRISE A GENERAL LEGEND TO FACILITATE THE USE OF PLANS. REFER TO THE PLANS AND SPECIFICATIONS FOR ITEMS REQUIRED.

PROJECT MANAGER: John Pacifici
C:\PW_WORK2\D0861421\EDG-PLTS-ELECTRICAL LEGEND 2 GRECO.DWG - E2 - PLOTTED 11/20/2018 3:37 PM BY STARK, THOMAS
FIELD BOOK INFORMATION:-

REV#	DATE	DESCRIPTION	BY

ALAN M. SCHWAB, P.E.
FLORIDA LICENSE NO. 61313

WADE TRIM
201 North Franklin Street, Suite 1350
Tampa, FL 33602
813.882.4373
www.wadetrim.com
Certificate of Authorization No.: 3952

CITY OF TAMPA, FLORIDA
GRECO PUMP STATION
REHABILITATION

ELECTRICAL SYMBOL LEGEND (SHT. 2 OF 2)

ISSUED FOR:	DATE:	BY:
90% PLANS	7-16-18	RGB
100% PLANS	11-20-18	RGB

JOB NO. TPA2007-01M
SHEET E2

Greco PS Rehabilitation

© Wade Trim Group, Inc.

GENERAL NOTES

1. CONTRACTOR SHALL SUBMIT SHOP DRAWINGS FOR APPROVAL PRIOR TO PURCHASING EQUIPMENT OR COMMENCING CONSTRUCTION.

2. ALL POWER CONDUCTORS SHALL BE STRANDED COPPER, #12 AWG MIN. W/XHHW-2 INSULATION, UNLESS OTHERWISE NOTED.

3. ALL WIRING SHALL BE IDENTIFIED W/NUMBERS AT ALL TERMINALS AND ON WIRING DIAGRAMS.

4. VERIFY ALL MECHANICAL EQUIPMENT SIZES AND RATING PRIOR TO CONNECTING.

5. FIELD VERIFY ALL EQUIPMENT LOCATIONS AND CONNECTIONS PRIOR TO COMMENCING CONSTRUCTION.

6. PLANS ARE DESIGNED IN ACCORDANCE WITH THE 6TH EDITION 2017 OF THE FLORIDA BUILDING CODE AND THE 2014 EDITION OF THE NATIONAL ELECTRICAL CODE. CONTRACTOR SHALL ENSURE THAT ALL ELECTRICAL WORK PERFORMED SHALL ADHERE TO THE SAME ACCORDANCE AND ALL APPLICABLE LOCAL ORDINANCES.

7. ALL THREADED CONNECTIONS SHALL BE COATED W/ ALUMA-SHIELD ANTI-SIEZE COMPOUND MANUFACTURED BY THOMAS & BETTS (T & B) OR EQUAL.

8. ALL PANELS, DISCONNECTS, SWITCHES, AND EQUIPMENT COVERPLATES SHALL BE LABELED W/ NAMEPLATES. NAMEPLATES SHALL BE THREE-PLY PHENOLIC BLACK-WHITE-BLACK ENGRAVED THROUGH THE FIRST BLACK LAYER. LETTERING SHALL BE 0.5 CM (3/16") MIN. EDGE OF NAMEPLATE SHALL BE BEVELED 45 DEG.

9. ALL CONDUIT SHALL BE SUPPORTED AT MAXIMUM 5'-0" INTERVALS.

10. ALL CIRCUITS SHALL HAVE A PROPERLY SIZED GROUNDING CONDUCTOR ROUTED INSIDE EACH CONDUIT W/ POWER CONDUCTORS.

11. ALL CONDUCTOR LENGTHS SHALL BE CONTINUOUS, NO SPLICES OR CONDUCTOR TERMINATIONS SHALL BE PERMITTED UNLESS SPECIFICALLY DESIGNED IN THE DRAWINGS.

12. NEATLY COIL ALL SPARE CONDUCTORS & TAPE W/ VINYL ELECTRICAL TAPE (SCOTCH 33+).

13. PROVIDE A MINIMUM OF 3'-6" CLEARANCE IN FRONT OF ALL ELECTRICAL EQUIPMENT IN ACCORDANCE W/ ARTICLE 110 OF THE NEC.

14. ALL FASTENING HARDWARE (SCREW, BOLTS NUTS ETC.) SHALL BE 316-STAINLESS STEEL. FASTENING HARDWARE CONSTRUCTED OF FERROUS MATERIAL ARE NOT ACCEPTABLE.

15. EXPOSED CONDUITS SHALL BE NON-COATED RIGID ALUMINUM CONDUIT, UNLESS OTHERWISE NOTED (UON), INSTALL PVC COATED RIGID ALUMINUM CONDUIT TO THE WET WELL, UNLESS OTHERWISE NOTED (UON).

16. DIRECT BURIED AND CONCRETE ENCASED CONDUIT SHALL BE SCHEDULE 80 PVC, UNLESS OTHERWISE NOTED. TRANSITIONS FROM ABOVE-GRADE RIGID ALUMINUM CONDUIT TO NONMETALLIC CONDUIT SHALL BE ACCOMPLISHED WITH A THREADED ADAPTER. RIGID ALUMINUM CONDUIT INSTALLED ABOVE GRADE AND EXTENDING BELOW GRADE SHALL INCLUDE THE FIRST 90° ELBOW. ALL RIGID ALUMINUM CONDUITS EXTENDING BELOW GRADE SHALL BE COATED WITH TWO COATS OF ASPHALTUM-TYPE PAINT ALONG ITS ENTIRE LENGTH BELOW GRADE AND EXTENDING 6" ABOVE GRADE OR ABOVE THE TOP OF THE FINISHED SLAB.

17. ABOVE GRADE INDOOR, AND NON-WASHDOWN AREAS, RIGID ALUMINUM CONDUIT CONNECTIONS TO CONTROL BOXES, ETC. SHALL BE MADE WITH ALUMINUM DOUBLE LOCKNUTS AND BUSHINGS. TURN DOWN ON THREADS TO SOLIDLY CONNECT RACEWAY TO BOX OR ENCLOSURE.

18. ALUMINUM WATERTIGHT HUBS (MYERS HUBS) SHALL BE USED FOR CONNECTIONS TO CONTROL BOXES, ETC. MOUNTED OUTDOORS, BELOW GRADE, OR WASHDOWN AREAS.

19. A 316-STAINLESS STEEL CHANNEL ERECTOR SYSTEM SHALL BE USED TO SUPPORT ALL CONDUITS, BOXES ETC. USE 316 STAINLESS STEEL MOUNTING HARDWARE.

20. THE CONTRACTOR SHALL FIELD VERIFY EXISTING CONDITIONS AND MAKE ADJUSTMENTS AS NECESSARY TO EXECUTE THE PROPOSED INSTALLATIONS.

21. ALL EXISTING INSTALLATIONS DENOTED ON THE DRAWINGS ARE FOR THE CONTRACTORS REFERENCE ONLY. ALL EXISTING INSTALLATIONS SHALL BE FIELD VERIFIED PRIOR TO SUBMITTING A BID AND PRIOR TO COMMENCING CONSTRUCTION.

22. PULL BOXES SHALL BE INSTALLED AS NECESSARY TO FACILITATE WIRE PULLS AND AVOID EXCESSIVE PULLING TENSION ON WIRING. IN NO CASE SHALL CONDUIT LENGTHS EXCEED 150' OR THE EQUIVALENT OF FOUR QUARTER BENDS (360 DEGREES TOTAL) WITHOUT A PULL BOX. PULL BOXES SHALL BE SIZED IN ACCORDANCE WITH ARTICLE 314 OF THE NEC.

23. THE WET WELL CLASSIFICATION IS CLASS 1, DIVISION 1, GROUP D, (HAZARDOUS AREA) NEC CHAPTER 5 IS APPLICABLE FOR INTERFACING WET WELL AND THE CONTROL ENCLOSURE.

24. ALL ELECTRICAL WORK SHALL BE PERFORMED WITHIN 2014 NEC AND CITY OF TAMPA/ HILLSBOROUGH COUNTY CODES AND SHALL BE INSPECTED BY CITY OF TAMPA/ HILLSBOROUGH COUNTY ELECTRICAL INSPECTORS AS APPLICABLE.

25. ALL ELECTRICAL COMPONENTS SHALL BE UL LISTED AND AS SPECIFIED, OR AS APPROVED BY THE ENGINEER. THE PANEL BUILDER SHALL BE UL-508A CERTIFIED AND A UL LABEL SHALL BE ATTACHED TO THE INSIDE OF THE ENCLOSURE. THE DOUBLE THROW DISCONNECT MUST BE LABELED "SUITABLE FOR USE AS SERVICE EQUIPMENT."

26. THE ENCLOSURES SHALL BE NEMA 4X, THEY SHALL BE CONSTRUCTED OF MINIMUM 14 GAUGE 304SS, THEY SHALL HAVE RAL 9003 WHITE POWDER COAT AND THE CLOSING SURFACES SHALL HAVE ROLLED LIPS, PROVIDE HINGED DOORS WITH 3-POINT LATCHED AND LOCKABLE HANDLES.

27. ALL COMPONENTS TO BE MOUNTED ON PANEL USING TAPPED HOLES.

28. ALL CONTROL WIRING SHALL BE STRANDED XHHW-2 COPPER, MINIMUM AWG #14 AND SHALL HAVE SPADE LUG TERMINATIONS.

29. ALARM FLOAT SWITCH WILL BE SUPPLIED BY THE CITY, BUT INSTALLED BY CONTRACTOR.

30. DIMENSIONS, ITEMS, OR ELEVATIONS MARKED "*" TO BE DETERMINED AFTER EQUIPMENT SELECTION.

31. ALL MECHANICAL CONNECTORS SHALL BE TORQUED PER NEC, UL OR MANUFACTURES SPECIFICATIONS.

32. INSTALL LAMINATED SCHEMATIC, LAMINATED DATA SHEET AND LAMINATED SOFT STARTER SETUP PARAMETERS ON BACK FACE OF THE DOOR INSIDE THE ENCLOSURE.

33. ENSURE THAT LINE CONNECTIONS TO METER SOCKET PROVIDE CORRECT MOTOR ROTATION.

34. CONDUCTORS WITHIN THE ENCLOSURE AND NOT ROUTED IN WIREWAYS, SHALL BE SECURED TO THE BACK PANEL WITH MECHANICAL FASTENERS, FASTENERS SECURED WITH ADHESIVE ARE NOT ACCEPTABLE.

35. ALL HINGED SURFACES SHALL BE GROUNDED WITH A BONDING JUMPER SECURED TO THE ENCLOSURE OR BACKPANEL.

36. THE PCSR SHALL BE MOTOROLA ACE 3600 PACKAGE AS DISTRIBUTED BY DCR ENGINEERING SERVICES INC. OR REVERE CONTROL SYSTEMS. THE PUMPING STATION CONTRACTOR SHALL COORDINATE HIS EFFORTS WITH DCR, OR REVERE CONTROL SYSTEMS TO ENSURE SYSTEM COMPATIBILITY. THE CONTRACTOR SHALL PROVIDE AND INSTALL A COMPLETE DUPLEX CONTROL SYSTEM/SCADA PACKAGE, AS PROGRAMMED BY DCR OR REVERE CONTROLS - THE EXISTING PUMPING STATION DCR CONTROLS SHALL REVERT TO THE CITY AS A SPARE.

37. A WET WELL LEVEL DETECTION SYSTEM SHALL BE PROVIDED AND INSTALLED BY THE CONTRACTOR. THE OUTPUT SHALL BE A LINEAR 4-20mA SIGNAL WITH RANGE AND CALIBRATION SUITABLE FOR THIS APPLICATION. THE SYSTEM SHALL BE OF THE ULTRASONIC TYPE-PULSAR, INC. MODEL dB10 W/ BLACKBOX 130 TRANSMITTER. CITY INSTRUMENTATION PERSONNEL WILL ASSIST THE CONTRACTOR WITH SPECIFYING THE TRANSDUCER MOUNTING LOCATION AND CALIBRATION. THE dB10 TRANSDUCER SHALL BE MOUNTED USING A 2 1/2" x 1/4" S.S. BRACKET, SEE dB10 MOUNTING BRACKET DETAIL, SHEET E18.

38. PROVIDE 1/4" MINIMUM THICKNESS LEXAN SHIELDS OVER POWER DISTRIBUTION BLOCK AND OTHER EXPOSED CABLE TERMINATIONS.

39. XHHW-2 CONDUCTORS (3-#10 AWG + 1-#10 AWG GND. CU FOR EACH MOTOR) SHALL EXTEND FROM THE CONTROL PANEL TO ASSOCIATED HIGH VOLTAGE JUNCTION BOX. PROVIDE SEAL-OFF BETWEEN CONTROL PANEL AND JUNCTION BOX AS INDICATED. THE SHOWN SEAL-OFFS SHALL BE ALUMINUM BODY, CROUSE-HINDS, OR EQUIVALENT.

40. ALUMINUM CONDUIT SURFACE THAT IS A CONTACT WITH SOIL OR CONCRETE SHALL BE COATED WITH TWO COATS ASPALT VARNISH (FED. SPEC. TT-V-51) EXTENDING 4" BEYOND FINAL CONTACT POINT.

41. STAINLESS STEEL HANGERS TO SUPPORT THE EXCESS LENGTH OF MOTOR CABLES SHALL BE INSTALLED IN THE WET WELL. THESE HANGERS SHALL BE LOCATED IN A SEPARATE AREA FROM THE HANGERS SUPPORTING THE PUMP CHAINS.

SCOPE OF WORK:

1. THE CONTRACTOR SHALL COORDINATE ELECTRICAL SERVICE REQUIREMENTS WITH TAMPA ELECTRIC COMPANY (TECO). THE PROPOSED SERVICE VOLTAGE SHALL REMAIN 120/208 VAC, 3PH, 4W.

2. REMOVE THE EXISTING, LIGHTNING ARRESTOR, EMERGENCY CONNECTOR, CONTROL PANEL, CONCRETE PEDESTAL AND ALL ASSOCIATED CONDUIT AND CONDUCTORS, AS SHOWN ON PLANS.

3. CAREFULLY REMOVE THE EXISTING DCR SCADA RTU CABINET MOUNTED ON THE EXISTING SCADA ANTENNA. DELIVER THIS RTU PACKAGE TO THE CITY FOR MAINTENANCE INVENTORY.

4. ANY SALVAGEABLE MATERIALS, AS DETERMINED BY THE ENGINEER, SHALL BE DELIVERED, BY THE CONTRACTOR, TO THE HOWARD F. CURREN AWTP. THE CONTRACTOR SHALL PROPERLY DISPOSE OF ALL OTHER REMOVED EQUIPMENT.

5. PREPARE THE SITE FOR THE INSTALLATION OF THE PROPOSED CONTROL EQUIPMENT.

6. PROVIDE AND INSTALL A NEW DUPLEX PUMP CONTROL PANEL. THE PUMP CONTROL PANEL SHALL CONTAIN CONTROL COMPONENTS, INDICATOR LIGHTS, AND SCADA RTU, AS SHOWN ON PLANS AND DETAILED IN SPECIFICATIONS.

7. PROVIDE AND INSTALL A WET WELL ISOLATION JUNCTION BOX FOR PUMP MOTOR CONNECTIONS.

8. PROVIDE AND INSTALL A NEW DUPLEX MOTOR CONTROL PANEL. THE MOTOR CONTROL PANEL SHALL CONTAIN CIRCUIT BREAKERS AND MOTOR STARTERS, AS SHOWN ON PLANS AND DETAILED IN SPECIFICATIONS.

9. PROVIDE AND INSTALL WET WELL ISOLATION BOX FOR INSTRUMENTATION AND CONTROL CONNECTIONS.

10. PROVIDE AND INSTALL A NEMA 4X, SERVICE ENTRANCE RATED, FUSED DOUBLE THROW SWITCH, AS SHOWN ON PLANS.

11. PROVIDE AND INSTALL EMERGENCY POWER CONNECTOR, AS SHOWN ON PLANS.

12. REUSE EXISTING SCADA ANTENNA MAST, AS INDICATED.

13. PROVIDE AND INSTALL AREA LIGHT, AS SHOWN ON PLANS.

14. CALIBRATE AND ADJUST SETPOINTS FOR ALL SENSING DEVICES, ALARM DEVICES, AND TIMERS. CALIBRATION AND SETPOINTS SHALL BE PROVIDED IN ACCORDANCE WITH MANUFACTURER'S RECOMMENDATIONS.

15. FURNISH AND INSTALL NEMA 4X JUNCTION BOXES, AS SHOWN ON PLANS.

16. PROVIDE FOR PROPER GROUNDING AS SHOWN, SPECIFIED, AND REQUIRED.

17. PROVIDE AND INSTALL ALL NECESSARY CONDUITS AND CONDUCTORS, AS SHOWN, SPECIFIED AND REQUIRED.

18. ALL ELECTRICAL WORK SHALL BE PERFORMED IN ACCORDANCE WITH THE 2014 EDITION OF THE NATIONAL ELECTRIC CODE AND CHAPTER 5 OF THE CITY OF TAMPA CODE.

19. REFER TO CIVIL/MECHANICAL SHEETS FOR BYPASS PUMPING REQUIREMENTS. IF ELECTRICALLY DRIVEN BYPASS PUMPS ARE UTILIZED, THE CONTRACTOR SHALL COORDINATE ALL TEMPORARY ELECTRICAL SERVICE REQUIREMENTS WITH TAMPA ELECTRIC COMPANY (TECO). ANY COSTS ASSOCIATED WITH TEMPORARY ELECTRIC POWER ARE TO BE INCLUDED IN THE LUMP SUM PRICE AND NO SEPERATE PAYMENT WILL BE MADE.

PROJECT MANAGER: John Pacifici
C:\PW_WORK2\D0861421\EDG-PLTS-GENERAL NOTES & SCOPE OF WORK GRECO.DWG - E3 - PLOTTED 11/20/2018 3:37 PM BY STARK, THOMAS
FIELD BOOK INFORMATION:-

REV#	DATE	DESCRIPTION	BY

ALAN M. SCHWAB, P.E.
FLORIDA LICENSE NO. 61313

WADE TRIM
201 North Franklin Street, Suite 1350
Tampa, FL 33602
813.882.4373
www.wadetrim.com
Certificate of Authorization No.: 3952

CITY OF TAMPA, FLORIDA
GRECO PUMP STATION
REHABILITATION

GENERAL NOTES AND SCOPE OF WORK

ISSUED FOR:	DATE:	BY:
90% PLANS	7-16-18	RGB
100% PLANS	11-20-18	RGB

JOB NO. TPA2007-01M

SHEET E3

Greco PS Rehabilitation

© Wade Trim Group, Inc.

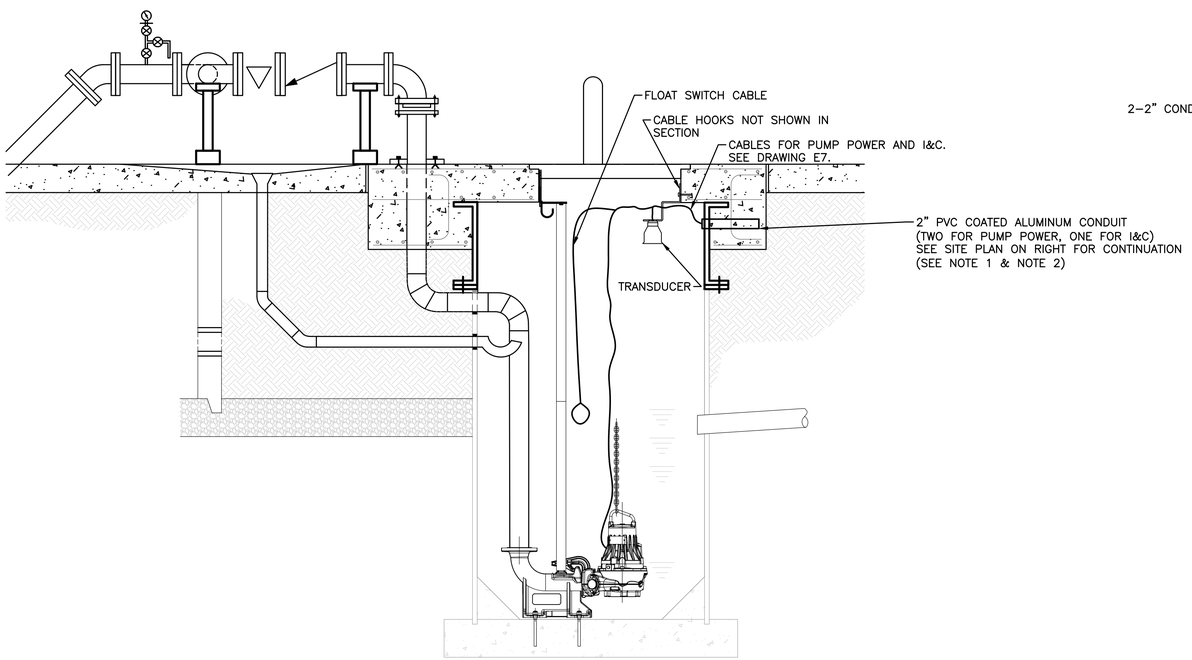

SIDE VIEW PUMP STATION: ELECTRICAL SITE PLAN

SCALE: ¾" = 1'

NOTES:

1. PROPOSED 2" PVC COATED ALUMINUM CONDUITS FOR MOTOR CONDUCTORS. CORE DRILL WET WELL WALL AS REQUIRED TO INSTALL CONDUIT USING LINK-SEALS. LINK-SEALS SHALL BE PROVIDED WITH 316 STAINLESS STEEL BOLTS AND NUTS.

2. PROPOSED 2" PVC COATED ALUMINUM CONDUIT FOR I&C CONDUCTORS. INSTALL CONDUIT AS DESCRIBED IN NOTE 1.

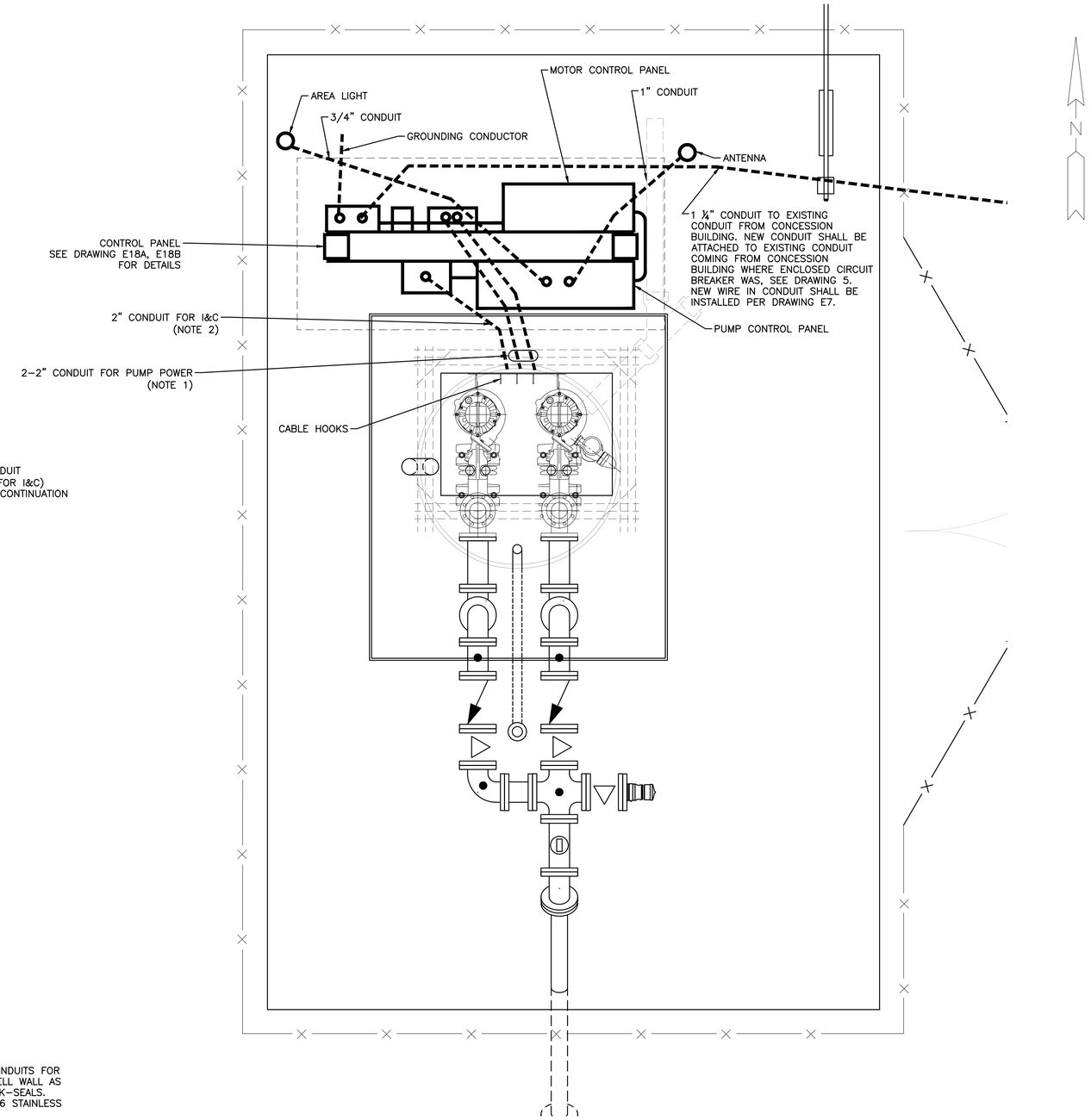

PUMP STATION: ELECTRICAL SITE PLAN

SCALE: ¾" = 1'

PROJECT MANAGER: John Pacifici
C:\PW_WORK2\D0861421\EDG-PLTS-GRECO SITE PLAN.DWG - E4 - PLOTTED 11/20/2018 3:38 PM BY STARK, THOMAS
FIELD BOOK INFORMATION:-

REV#	DATE	DESCRIPTION	BY

ALAN M. SCHWAB, P.E.
FLORIDA LICENSE NO. 61313

WADE TRIM
201 North Franklin Street, Suite 1350
Tampa, FL 33602
813.882.4373
www.wadetrim.com
Certificate of Authorization No.: 3952

CITY OF TAMPA, FLORIDA
GRECO PUMP STATION
REHABILITATION

SITE PLAN

ISSUED FOR:	DATE:	BY:
90% PLANS	7-16-18	RGB
100% PLANS	11-20-18	RGB

JOB NO. TPA2007-01M

SHEET E4

Greco PS Rehabilitation

© Wade Trim Group, Inc.

THIS SHEET HAS BEEN LEFT INTENTIONALLY BLANK.

PROJECT MANAGER: John Pacifici
C:\PW_WORK2\D0861421\EDC-PLTS-GRECO BLANK SHEET E5.DWG - E5 - FIELD BOOK INFORMATION:- PLOTTED 11/20/2018 3:38 PM BY STARK, THOMAS

REV#	DATE	DESCRIPTION	BY

ALAN M. SCHWAB, P.E.
FLORIDA LICENSE NO. 61313

WADE TRIM
201 North Franklin Street, Suite 1350
Tampa, FL 33602
813.882.4373
www.wadetrim.com
Certificate of Authorization No.: 3952

CITY OF TAMPA, FLORIDA
GRECO PUMP STATION
REHABILITATION

BLANK SHEET

ISSUED FOR:	DATE:	BY:
90% PLANS	7-16-18	RGB
100% PLANS	11-20-18	RGB

JOB NO.
TPA2007-01M

SHEET
E5

© Wade Trim Group, Inc.

Greco PS Rehabilitation

THIS SHEET HAS BEEN LEFT INTENTIONALLY BLANK.

PROJECT MANAGER: John Pacifici
C:\PW_WORK2\D0861421\EDC-PLTS-GRECO BLANK SHEET E6.DWG - E6 - FIELD BOOK INFORMATION:- PLOTTED 11/20/2018 3:38 PM BY STARK, THOMAS

REV#	DATE	DESCRIPTION	BY

ALAN M. SCHWAB, P.E.
FLORIDA LICENSE NO. 61313

WADE TRIM
201 North Franklin Street, Suite 1350
Tampa, FL 33602
813.882.4373
www.wadetrim.com
Certificate of Authorization No.: 3952

CITY OF TAMPA, FLORIDA
GRECO PUMP STATION
REHABILITATION

BLANK SHEET

ISSUED FOR:	DATE:	BY:
90% PLANS	7-16-18	RGB
100% PLANS	11-20-18	RGB

JOB NO.
TPA2007-01M

SHEET
E6

© Wade Trim Group, Inc.

Greco PS Rehabilitation

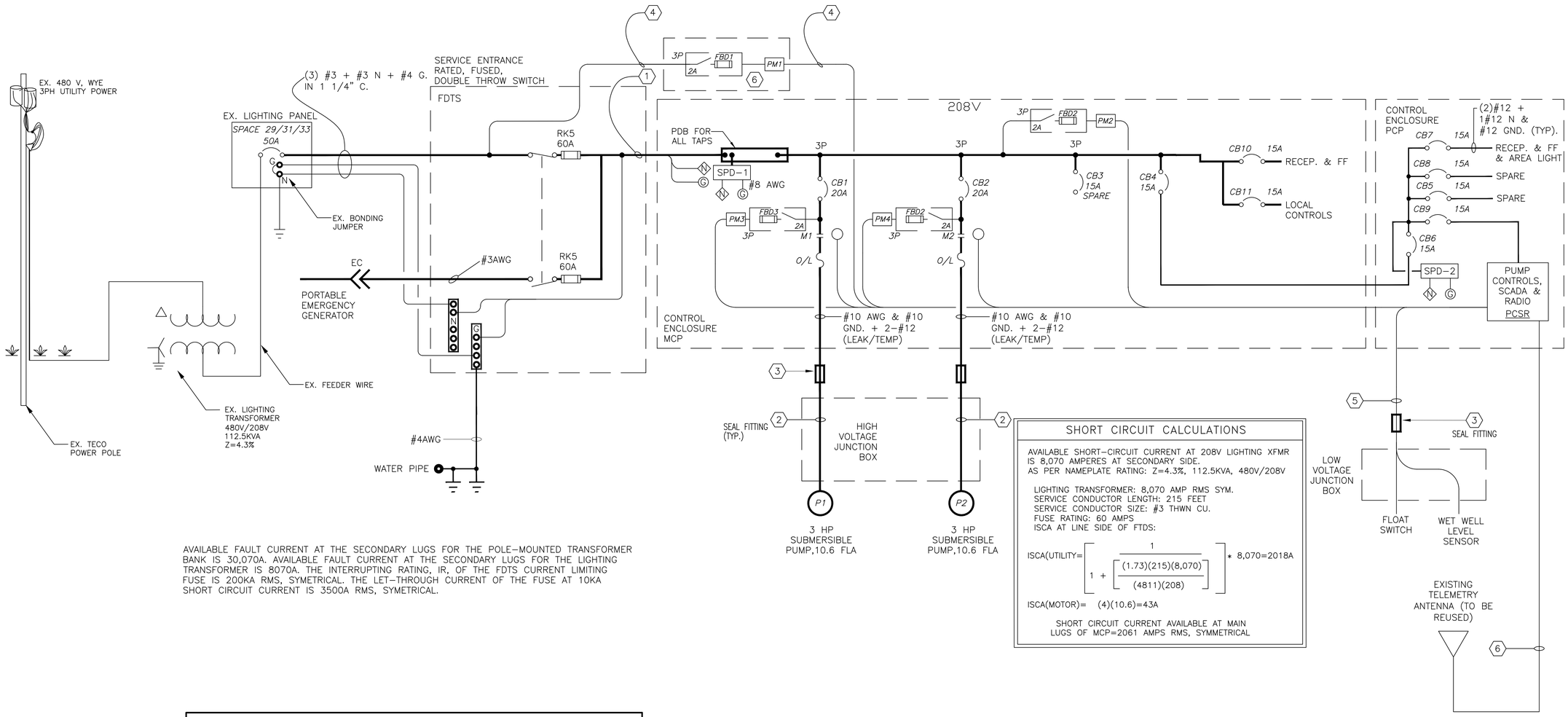

AVAILABLE FAULT CURRENT AT THE SECONDARY LUGS FOR THE POLE-MOUNTED TRANSFORMER BANK IS 30,070A. AVAILABLE FAULT CURRENT AT THE SECONDARY LUGS FOR THE LIGHTING TRANSFORMER IS 8070A. THE INTERRUPTING RATING, IR, OF THE FDTS CURRENT LIMITING FUSE IS 200KA RMS, SYMETRICAL. THE LET-THROUGH CURRENT OF THE FUSE AT 10KA SHORT CIRCUIT CURRENT IS 3500A RMS, SYMETRICAL.

SHORT CIRCUIT CALCULATIONS

AVAILABLE SHORT-CIRCUIT CURRENT AT 208V LIGHTING XFMR IS 8,070 AMPERES AT SECONDARY SIDE.
AS PER NAMEPLATE RATING: Z=4.3%, 112.5KVA, 480V/208V

LIGHTING TRANSFORMER: 8,070 AMP RMS SYM.
SERVICE CONDUCTOR LENGTH: 215 FEET
SERVICE CONDUCTOR SIZE: #3 THWN CU.
FUSE RATING: 60 AMPS
ISCA AT LINE SIDE OF FTDS:

$$ISCA(UTILITY=\left[\frac{1}{1+\left[\frac{(1.73)(215)(8{,}070)}{(4811)(208)}\right]}\right]*8{,}070=2018A$$

ISCA(MOTOR)= (4)(10.6)=43A

SHORT CIRCUIT CURRENT AVAILABLE AT MAIN LUGS OF MCP=2061 AMPS RMS, SYMMETRICAL

ELECTRICAL SERVICE LOAD SUMMARY

208 VAC, 3ø, 4W

LOAD	CONNECTED	DEMAND	APPROX. PHASE CURRENTS L1	L2	L3
PUMP #1	3.9 KVA	3.9 KVA	10.6 A	10.6 A	10.6 A
PUMP #2	3.9 KVA	3.9 KVA	10.6 A	10.6 A	10.6 A
PUMP CONTROL PANEL	2.0 KVA	2.0 KVA	8.3 A	0	8.3 A
TOTAL	9.8 KVA	9.8 KVA	29.5 A	21.2 A	29.5 A

ONE LINE DIAGRAM NOTES:

1. PROVIDE AND INSTALL 3-#3 + 1-#3 NEUTRAL + 1-#4 GND IN 1 ¼"C. CONDUIT, REFER TO DETAILS ON SHEET E4, E18A & E18B.
2. PROVIDE AND INSTALL 2"C FOR SUBMERSIBLE PUMP CABLE (PROVIDE W/ PUMP)-SEE SHEET E4, E18A & E18B
3. PROVIDE SEAL FITTING, REFER TO DETAIL ON SHEET E18B.
4. PROVIDE AND INSTALL 3-#12 + 1-#12 GND. IN ¾" CONDUIT, REFER TO DETAILS ON SHEET E20.
5. PROVIDE 2" CONDUIT FROM NEW PUMP CONTROL JB CABINET TO WET WELL FOR FLOAT SWITCH AND LEVEL SENSOR CABLES. REFER TO DETAILS ON SHEET E4 & E18A.
6. PROVIDE 1" CONDUIT FROM NEW PUMP CONTROL CABINET TO EXISTING ANTENNA MAST FOR NEW COAX CABLE, REFER TO DETAIL ON SHEET E5 & E18.
7. PM1 JUNCTION BOX, SEE SHEETS E18A AND E20 FOR DETAILS.

REV#	DATE	DESCRIPTION	BY

ALAN M. SCHWAB, P.E.
FLORIDA LICENSE NO. 61313

WADE TRIM
201 North Franklin Street, Suite 1350
Tampa, FL 33602
813.882.4373
www.wadetrim.com
Certificate of Authorization No.: 3952

CITY OF TAMPA, FLORIDA
GRECO PUMP STATION
REHABILITATION

GRECO SOFTBALL PUMP STATION
ONE LINE DIAGRAM

ISSUED FOR: DATE: BY:
90% PLANS 7-16-18 RGB
100% PLANS 11-20-18 RGB

JOB NO. TPA2007-01M
SHEET E7

© Wade Trim Group, Inc.

Greco PS Rehabilitation

PROJECT MANAGER:John Pacifici
C:\PW_WORK2\D0861421\EDG-PLTS-ONE LINE DIAGRAM- GRECO.DWG - E7 - PLOTTED 11/20/2018 3:38 PM BY STARK, THOMAS
FIELD BOOK INFORMATION:-

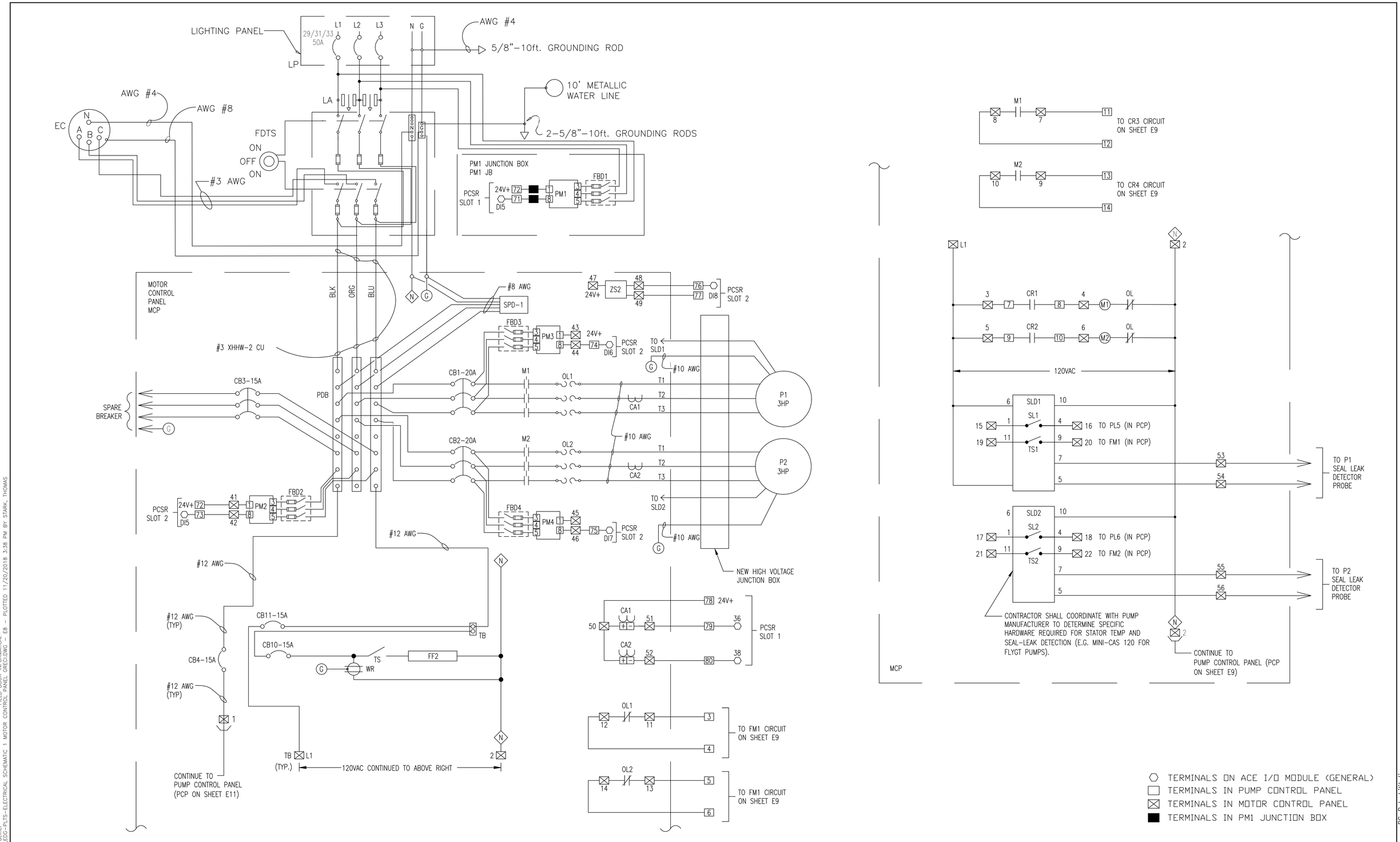

REV#	DATE	DESCRIPTION	BY

ALAN M. SCHWAB, P.E.
FLORIDA LICENSE NO. 61313

WADE TRIM

201 North Franklin Street, Suite 1350
Tampa, FL 33602
813.882.4373
www.wadetrim.com
Certificate of Authorization No.: 3952

CITY OF TAMPA, FLORIDA
GRECO PUMP STATION
REHABILITATION

ELECTRICAL SCHEMATIC (1 OF 4)
MOTOR CONTROL PANEL

ISSUED FOR:	DATE:	BY:
90% PLANS	7-16-18	RGB
100% PLANS	11-20-18	RGB

JOB NO. TPA2007-01M

SHEET E8

© Wade Trim Group, Inc.

Greco PS Rehabilitation

PROJECT MANAGER:John Pacifici
C:\PW_WORK2\D0861421\EDG-PLTS-ELECTRICAL SCHEMATIC 1 MOTOR CONTROL PANEL GRECI.DWG - E8 - PLOTTED 11/20/2018 3:38 PM BY STARK, THOMAS
FIELD BOOK INFORMATION:-

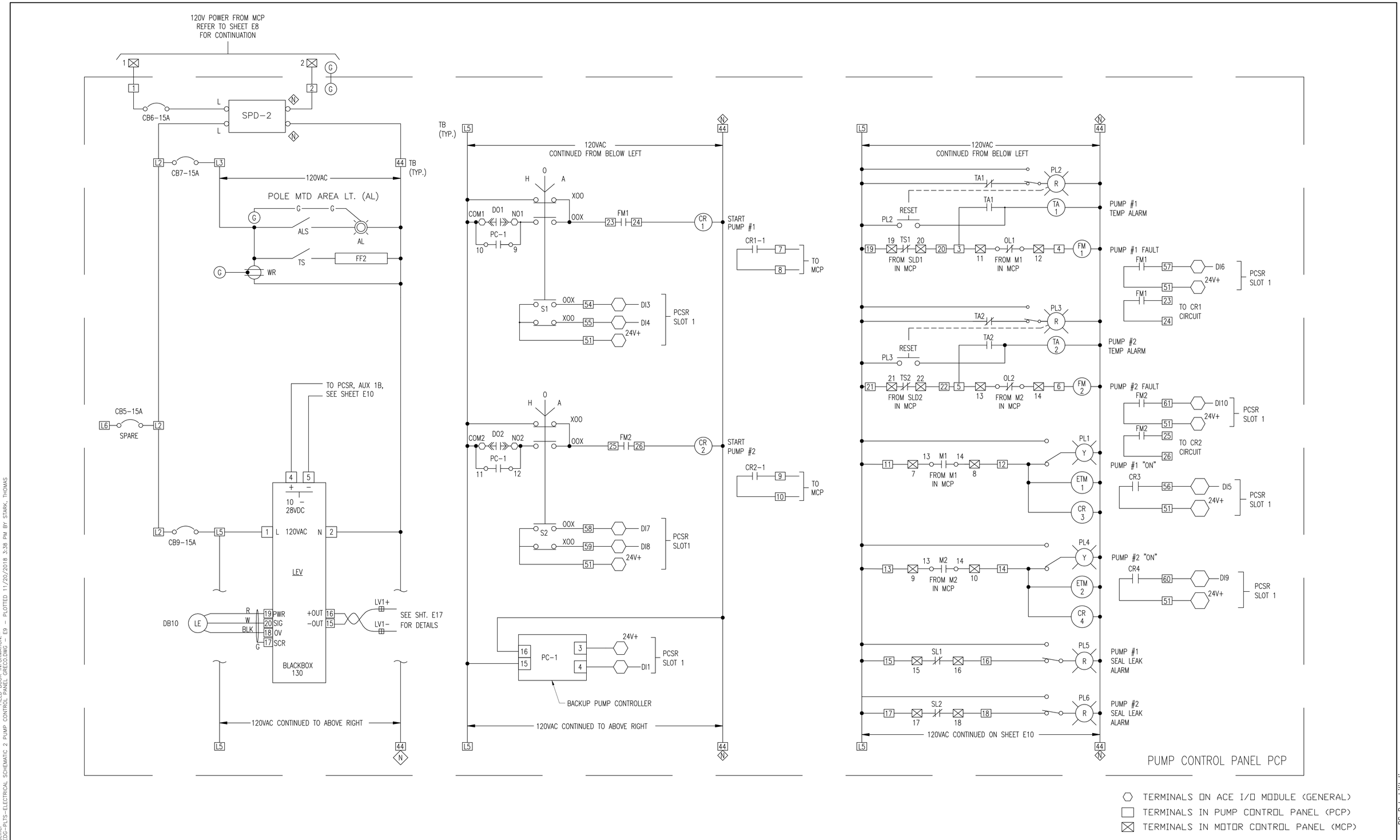

REV#	DATE	DESCRIPTION	BY

ALAN M. SCHWAB, P.E.
FLORIDA LICENSE NO. 61313

WADE TRIM

201 North Franklin Street, Suite 1350
Tampa, FL 33602
813.882.4373
www.wadetrim.com
Certificate of Authorization No.: 3952

CITY OF TAMPA, FLORIDA
GRECO PUMP STATION
REHABILITATION

ELECTRICAL SCHEMATIC (2 OF 4)
PUMP CONTROL PANEL

ISSUED FOR: DATE: BY:
90% PLANS 7-16-18 RGB
100% PLANS 11-20-18 RGB

JOB NO. TPA2007-01M

SHEET E9

© Wade Trim Group, Inc.

Greco PS Rehabilitation

PROJECT MANAGER:John Pacifici
C:\PW_WORK2\00861421\EDG-PLTS-ELECTRICAL SCHEMATIC 2 PUMP CONTROL PANEL GRECO.DWG - E9 - PLOTTED 11/20/2018 3:38 PM BY STARK, THOMAS
FIELD BOOK INFORMATION:-

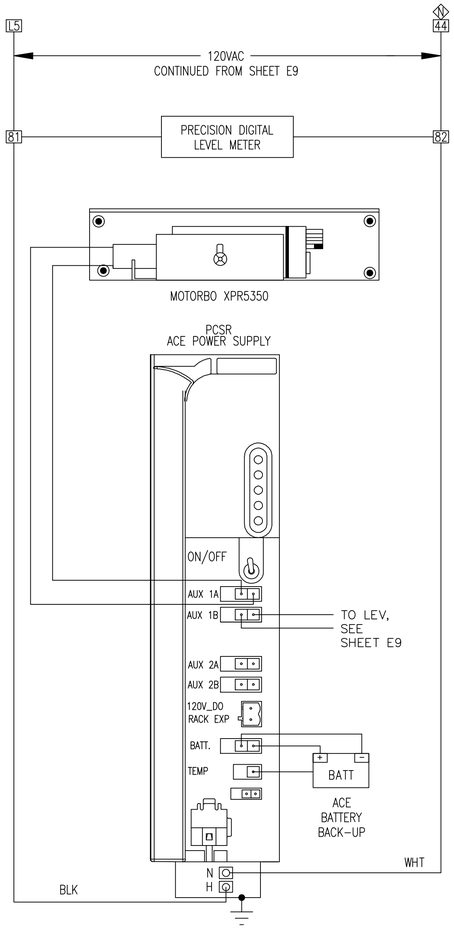

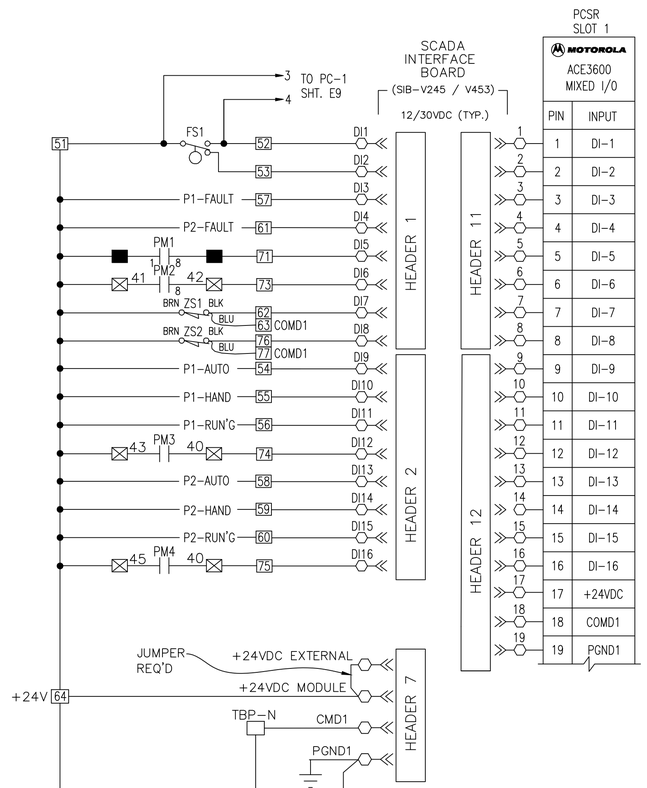

PCSR SLOT 1

PIN	INPUT	
1	DI-1	WET WELL HIGH
2	DI-2	WET WELL NOT HIGH
3	DI-3	PUMP 1 FAULT
4	DI-4	PUMP 2 FAULT
5	DI-5	UTILITY POWER AVAILABLE (PM1) TO PCSR
6	DI-6	MOTOR CONTROL PANEL PHASE LOSS (PM2) TO PCSR
7	DI-7	PUMP CONTROL PANEL INTRUSION
8	DI-8	MOTOT CONTROL PANEL INTRUSION TO PCSR
9	DI-9	PUMP 1 SS IN AUTO
10	DI-10	PUMP 1 SS IN HAND
11	DI-11	PUMP 1 RUNNING
12	DI-12	PUMP 1 MCP STATUS (PM3) TO PCSR
13	DI-13	PUMP 2 SS IN AUTO
14	DI-14	PUMP 2 SS IN HAND
15	DI-15	PUMP 2 RUNNING
16	DI-16	PUMP 2 MCP STATUS (PM4) TO PCSR
17	+24VDC	
18	COMD1	
19	PGND1	

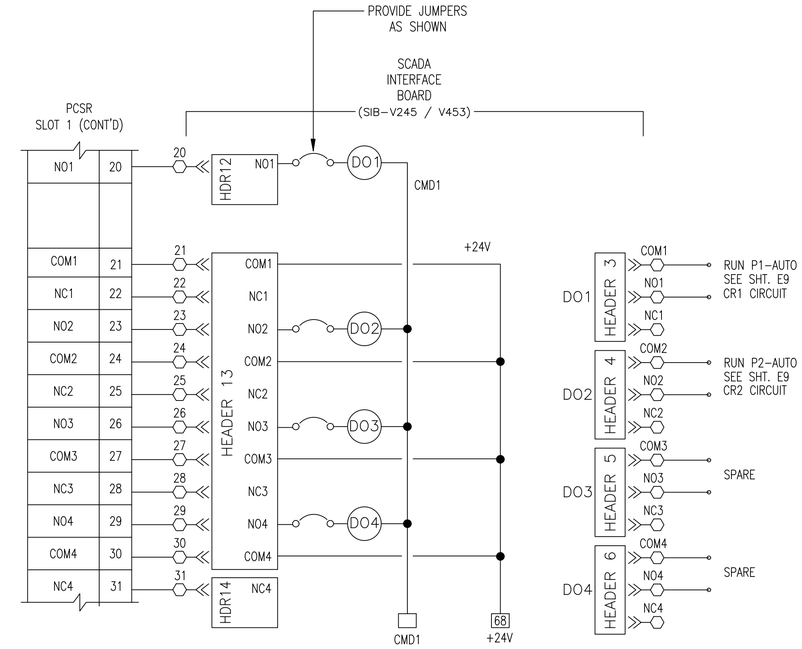

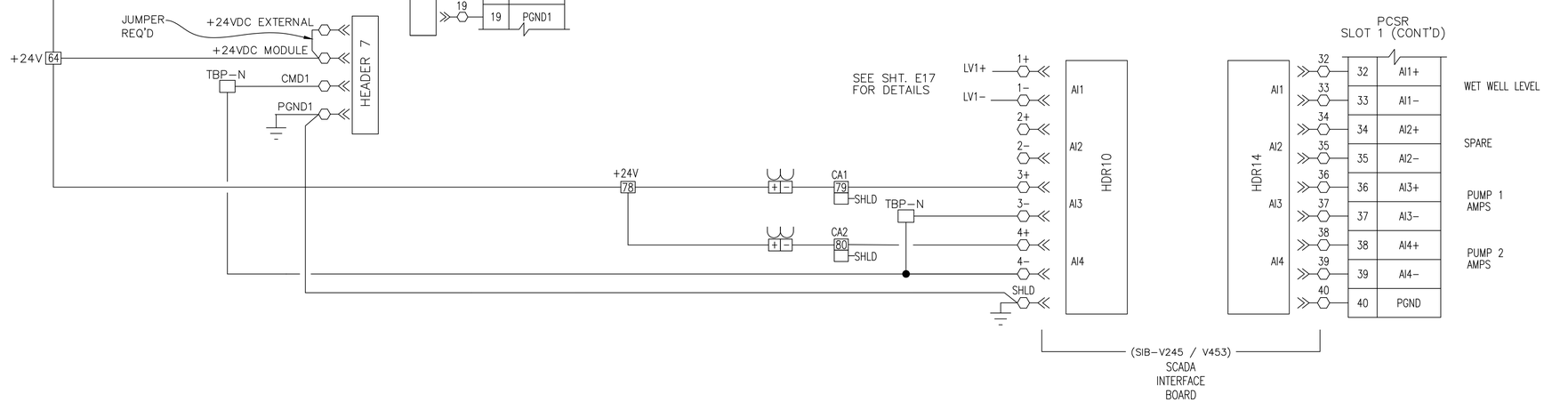

- TERMINALS ON ACE I/O MODULE (GENERAL)
- TERMINALS IN PUMP CONTROL PANEL
- TERMINALS IN MOTOR CONTROL PANEL
- TERMINALS IN PM1 DISCONNECT ENCLOSURE

FIELD BOOK INFORMATION—
C:\PW_WORK2\D0861421\EDG-PLTS-ELECTRICAL SCHEMATIC 3 MOTOR CONTROL PANEL GRECO.DWG – E10 – PLOTTED 11/20/2018 3:38 PM BY STARK, THOMAS
PROJECT MANAGER: John Pacifici

REV#	DATE	DESCRIPTION	BY

ALAN M. SCHWAB, P.E.
FLORIDA LICENSE NO. 61313

WADE TRIM
201 North Franklin Street, Suite 1350
Tampa, FL 33602
813.882.4373
www.wadetrim.com
Certificate of Authorization No.: 3952

CITY OF TAMPA, FLORIDA
GRECO PUMP STATION
REHABILITATION

ELECTRICAL SCHEMATIC (3 OF 4)
MOTOR CONTROL PANEL

ISSUED FOR: DATE: BY:
90% PLANS 7-16-18 RGB
100% PLANS 11-20-18 RGB

JOB NO. TPA2007-01M
SHEET E10

Greco PS Rehabilitation

© Wade Trim Group, Inc.

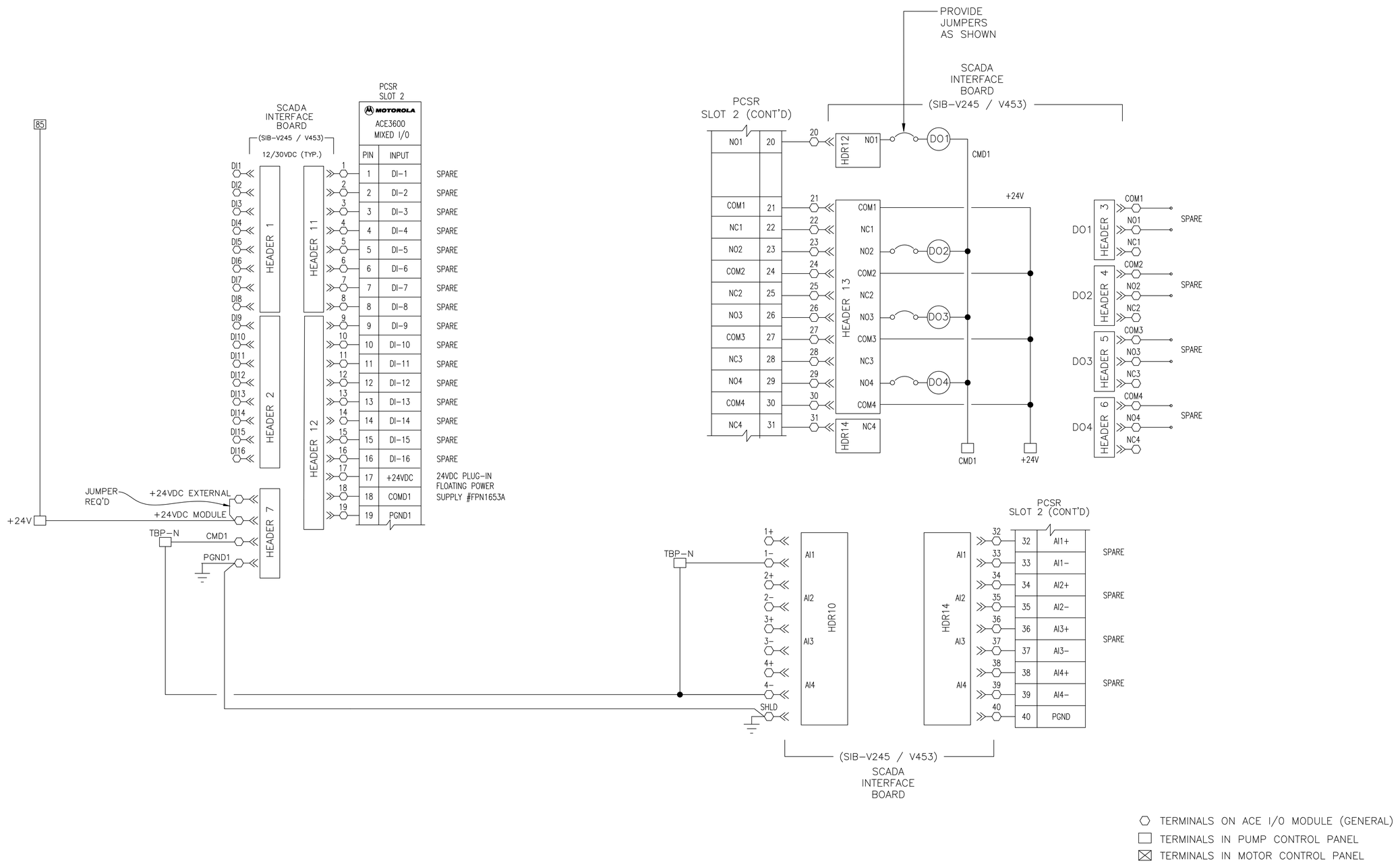

PROJECT MANAGER:John Pacifici
C:\PW_WORK2\00861421\EDG-PLTS-ELECTRICAL SCHEMATIC 4 MOTOR CONTROL PANEL GRECO.DWG - E10A - PLOTTED 11/20/2018 3:39 PM BY STARK, THOMAS
FIELD BOOK INFORMATION:-

REV#	DATE	DESCRIPTION	BY

ALAN M. SCHWAB, P.E.
FLORIDA LICENSE NO. 61313

WADE TRIM
201 North Franklin Street, Suite 1350
Tampa, FL 33602
813.882.4373
www.wadetrim.com
Certificate of Authorization No.: 3952

CITY OF TAMPA, FLORIDA
GRECO PUMP STATION
REHABILITATION

ELECTRICAL SCHEMATIC (4 OF 4)
MOTOR CONTROL PANEL

ISSUED FOR:	DATE:	BY:
90% PLANS	7-16-18	RGB
100% PLANS	11-20-18	RGB

JOB NO. TPA2007-01M
SHEET E10A

Greco PS Rehabilitation

© Wade Trim Group, Inc.

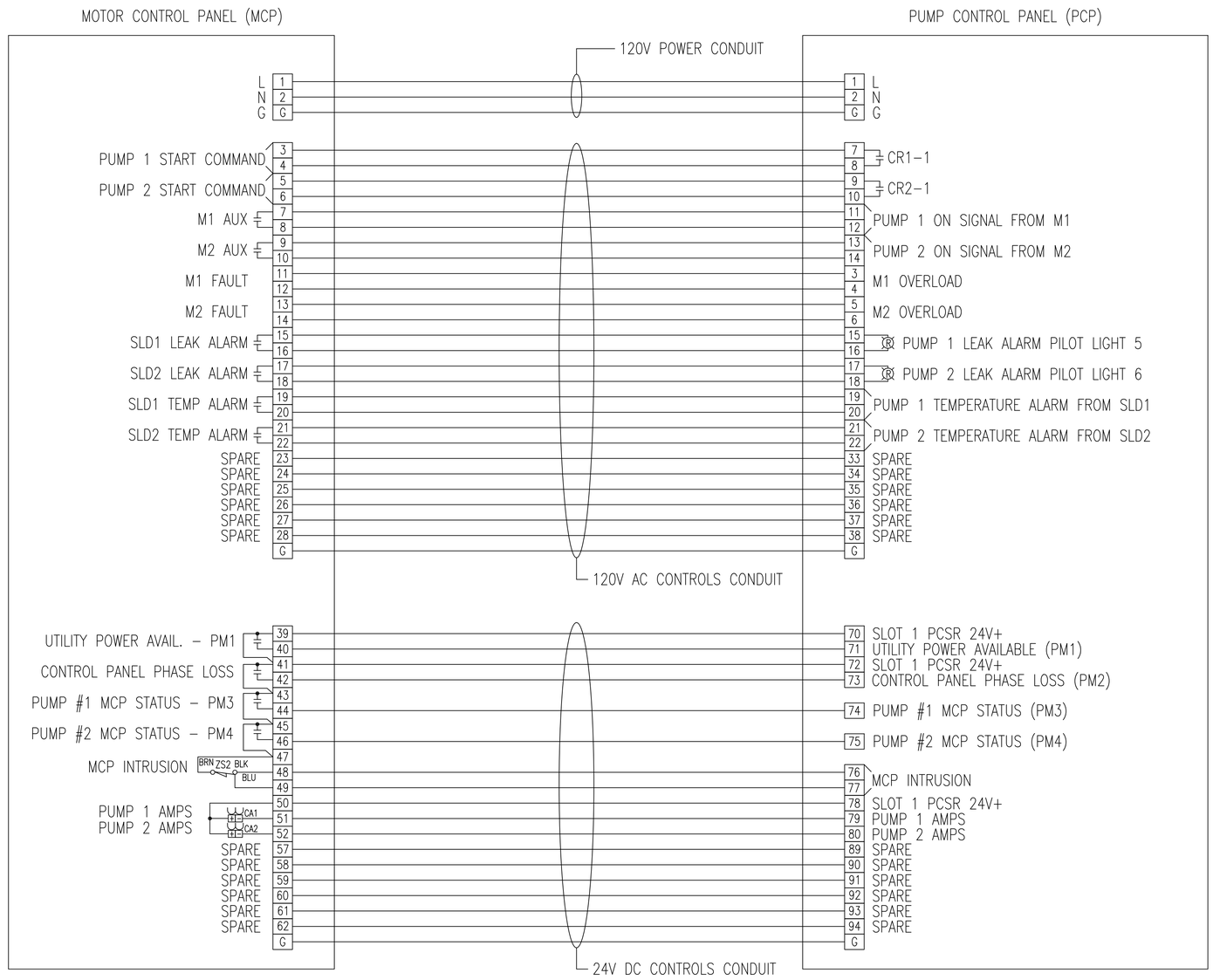

PROJECT MANAGER:John Pacifici
C:\PW_WORK2\D0861421\EDG-PLTS-MCP TO PCP INTERCONNECTION WIRING DIAGRAM GRECO.DWG - E11 - PLOTTED 11/20/2018 3:39 PM BY STARK, THOMAS
FIELD BOOK INFORMATION:-

REV#	DATE	DESCRIPTION	BY

ALAN M. SCHWAB, P.E.
FLORIDA LICENSE NO. 61313

WADE TRIM
201 North Franklin Street, Suite 1350
Tampa, FL 33602
813.882.4373
www.wadetrim.com
Certificate of Authorization No.: 3952

CITY OF TAMPA, FLORIDA
GRECO PUMP STATION
REHABILITATION

MCP TO PCP INTERCONNECTION
WIRING DIAGRAM

ISSUED FOR: DATE: BY:
90% PLANS 7-16-18 RGB
100% PLANS 11-20-18 RGB

JOB NO. TPA2007-01M

SHEET E11

Greco PS Rehabilitation

© Wade Trim Group, Inc.

TB1 (▭) (120V AC) MOUNTED ON PUMP CONTROL PANEL (PCP)

TERM.	DESCRIPTION
1	120V FROM MOTOR CONTROL PANEL
2	NEUTRAL FROM MOTOR CONTROL PANEL
3	M1 OVERLOAD
4	M1 OVERLOAD
5	M2 OVERLOAD
6	M2 OVERLOAD
7	PUMP 1 START COMMAND TO M1 (IN MCP)
8	PUMP 1 START COMMAND TO M1 (IN MCP)
9	PUMP 2 START COMMAND TO M2 (IN MCP)
10	PUMP 2 START COMMAND TO M2 (IN MCP)
11	P1 "ON" SIGNAL FROM M1 (IN MCP)
12	P1 "ON" SIGNAL FROM M1 (IN MCP)
13	P2 "ON" SIGNAL FROM M2 (IN MCP)
14	P2 "ON" SIGNAL FROM M2 (IN MCP)
15	PUMP 1 LEAK ALARM FROM MCP
16	PUMP 1 LEAK ALARM FROM MCP
17	PUMP 2 LEAK ALARM FROM MCP
18	PUMP 2 LEAK ALARM FROM MCP
19	PUMP 1 TEMPERATURE ALARM FROM MCP
20	PUMP 1 TEMPERATURE ALARM FROM MCP
21	PUMP 2 TEMPERATURE ALARM FROM MCP
22	PUMP 2 TEMPERATURE ALARM FROM MCP
23	PUMP 1 FAULT RELAY CONTACT
24	PUMP 1 FAULT RELAY CONTACT
25	PUMP 2 FAULT RELAY CONTACT
26	PUMP 2 FAULT RELAY CONTACT
27	SPARE
28	SPARE
29	SPARE
30	SPARE
31–43	SPARE

TB1 CONTINUED

44	SPD–2 NUETRAL OUT
L1	SPD–2 NUETRAL OUT
L2	MAIN BREAKER CB6
L3	CB7 OUT
L4	SPARE CB8 BREAKER
L5	CB9 OUT
L6	SPARE CB5 BREAKER

TB2 (▭) (24V DC) MOUNTED ON PUMP CONTROL PANEL (PCP)

TERM.	DESCRIPTION
51	SLOT 1 PCSR 24V+
52	WET WELL HIGH
53	WET WELL NOT HIGH
54	PUMP 1 "AUTO" TO PCSR
55	PUMP 1 "HAND" TO PCSR
56	PUMP 1 "ON" TO PCSR
57	PUMP 1 "FAULT" TO PCSR
58	PUMP 2 "AUTO" TO PCSR
59	PUMP 2 "HAND" TO PCSR
60	PUMP 2 "ON" TO PCSR
61	PUMP 2 "FAULT" TO PCSR
62	PUMP CONTROL PANEL INTRUSION
63	PUMP CONTROL PANEL INTRUSION
64	SLOT 1 PCSR 24V+
65	SPARE
66	SLOT 1 PCSR 24V+
67	SPARE
68	SLOT 1 PCSR 24V+
69	SPARE
70	SLOT 1 PCSR 24V+
71	UTIL POWER AVAILABLE (PM1) TO PCSR
72	SLOT 1 PCSR 24V+
73	MOTOR CONTROL PANEL PHASE LOSS (PM2)
74	PUMP #1 MCP STATUS (PM3) TO PCSR
75	PUMP #2 MCP STATUS (PM4) TO PCSR
76	MOTOR CONTROL PANEL INTRUSION
77	MOTOR CONTROL PANEL INTRUSION
78	SLOT 1 PCSR 24V+
79	PUMP 1 AMPS
80	PUMP 2 AMPS
81	PROCESS METER FOR LEVEL 120V–POWER
82	PROCESS METER FOR LEVEL 120V–NEUTRAL
83	SPARE SLOT 1 TERMINALS
84	SPARE SLOT 1 TERMINALS

TB1 CONTINUED

85	SLOT 2 PCSR 24V+
86	SLOT 2 PCSR 24V+
87	SLOT 2 PCSR 24V+
88–100	SPARE SLOT 2 TERMINALS

X–Y TERMINAL POINT MOUNTED ON PCP (INTERFACE TO PCSR)
⬡ TERMINAL POINT ON PCSR
▭ TERMINAL POINT IN PUMP CONTROL PANEL (PCP)
⊠ TERMINAL POINT IN MOTOR CONTROL PANEL (MCP)

CONTROL SCHEMATIC SYMBOLS

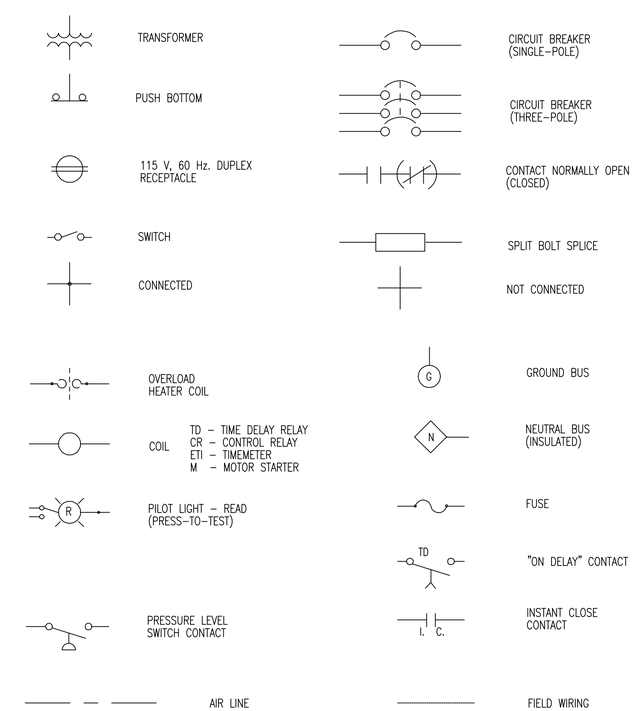

PROJECT MANAGER:John Pacifici
C:\PW_WORK2\D0861421\EDG-PLTS-ELECTRICAL SCHEMATIC LEGEND 1 GRECO.DWG - E12 - PLOTTED 11/20/2018 3:39 PM BY STARK, THOMAS
FIELD BOOK INFORMATION:-

REV#	DATE	DESCRIPTION	BY

ALAN M. SCHWAB, P.E.
FLORIDA LICENSE NO. 61313

WADE TRIM
201 North Franklin Street, Suite 1350
Tampa, FL 33602
813.882.4373
www.wadetrim.com
Certificate of Authorization No.: 3952

CITY OF TAMPA, FLORIDA
GRECO PUMP STATION
REHABILITATION

ELECTRICAL SCHEMATIC LEGEND
(SHT. 1 OF 2)

ISSUED FOR: DATE: BY:
90% PLANS 7–16–18 RGB
100% PLANS 11–20–18 RGB

JOB NO. TPA2007–01M
SHEET E12

Greco PS Rehabilitation

© Wade Trim Group, Inc.

TB3 (⊠) (120V AC) MOUNTED ON MOTOR CONTROL PANEL (MCP)	
TERM.	DESCRIPTION
1	120V TO PUMP CONTROL PANEL
2	NEUTRAL (CONTINUED TO PUMP CONTROL PANEL)
3	PUMP 1 START COMMAND FROM CR1-1 (IN PCP)
4	PUMP 1 START COMMAND FROM CR1-1 (IN PCP)
5	PUMP 2 START COMMAND FROM CR2-1 (IN PCP)
6	PUMP 2 START COMMAND FROM CR2-1 (IN PCP)
7	PUMP 1 'ON' SIGNAL TO CR3 (IN PCP)
8	PUMP 1 'ON' SIGNAL TO CR3 (IN PCP)
9	PUMP 2 'ON' SIGNAL TO CR4 (IN PCP)
10	PUMP 2 'ON' SIGNAL TO CR4 (IN PCP)
11	M1 FAULT SIGNAL TO PCP
12	M1 FAULT SIGNAL TO PCP
13	M2 FAULT SIGNAL TO PCP
14	M2 FAULT SIGNAL TO PCP
15	PUMP 1 LEAK DETECTED TO PILOT LIGHT 5 (IN PCP)
16	PUMP 1 LEAK DETECTED TO PILOT LIGHT 5 (IN PCP)
17	PUMP 2 LEAK DETECTED TO PILOT LIGHT 6 (IN PCP)
18	PUMP 2 LEAK DETECTED TO PILOT LIGHT 6 (IN PCP)
19	PUMP 1 TEMPERATURE ALARM TO FM1 (IN PCP)
20	PUMP 1 TEMPERATURE ALARM TO FM1 (IN PCP)
21	PUMP 2 TEMPERATURE ALARM TO FM2 (IN PCP)
22	PUMP 2 TEMPERATURE ALARM TO FM2 (IN PCP)
23-37	SPARE
L1	CB11 OUT MOTOR CONTROL PANEL POWER

TB4 (⊠) (24V DC) MOUNTED ON MOTOR CONTROL PANEL (MCP)	
TERM.	DESCRIPTION
39	SPARE
40	SPARE
41	SLOT 1 PCSR 24V+
42	MOTOR CONTROL PANEL PHASE LOSS (PM2) TO PCSR
43	SLOT 1 PCSR 24V+
44	PUMP #1 MCP STATUS PHASE LOSS (PM3) TO PCSR
45	SLOT 1 PCSR 24V+
46	PUMP #2 MCP STATUS PHASE LOSS (PM4) TO PCSR
47	SLOT 1 PCSR 24V+
48	MOTOR CONTROL PANEL INTRUSION
49	
50	SLOT 1 PCSR 24V+
51	PUMP 1 AMPS
52	PUMP 2 AMPS
53	PUMP 1 SEAL LEAK DETECTOR PROBE
54	PUMP 1 SEAL LEAK DETECTOR PROBE
55	PUMP 1 SEAL LEAK DETECTOR PROBE
56	PUMP 1 SEAL LEAK DETECTOR PROBE
57-66	SPARE

X-Y
- ⊞ TERMINAL POINT MOUNTED ON PCP (INTERFACE TO PCSR)
- ○ TERMINAL POINT ON PCSR
- ▭ TERMINAL POINT IN PUMP CONTROL PANEL (PCP)
- ⊠ TERMINAL POINT IN MOTOR CONTROL PANEL (MCP)

PROJECT MANAGER: John Pacifici
C:\PW_WORK2\D0861421\EDG-PLTS-ELECTRICAL SCHEMATIC LEGEND 2 GRECO.DWG - E13 - PLOTTED 11/20/2018 3:39 PM BY STARK, THOMAS
FIELD BOOK INFORMATION:-

REV#	DATE	DESCRIPTION	BY

ALAN M. SCHWAB, P.E.
FLORIDA LICENSE NO. 61313

WADE TRIM
201 North Franklin Street, Suite 1350
Tampa, FL 33602
813.882.4373
www.wadetrim.com
Certificate of Authorization No.: 3952

CITY OF TAMPA, FLORIDA
GRECO PUMP STATION
REHABILITATION

ELECTRICAL SCHEMATIC LEGEND
(SHT. 2 OF 2)

ISSUED FOR:	DATE:	BY:
90% PLANS	7-16-18	RGB
100% PLANS	11-20-18	RGB

JOB NO. TPA2007-01M
SHEET E13

© Wade Trim Group, Inc.

Greco PS Rehabilitation

PARTS SCHEDULE

SYMBOL	NAME	PART				REMARKS
		MAKE	TYPE	MODEL OR CAT. #	RATING	
CB 1	CIRCUIT BREAKER	SQUARE D	THREE POLE	HDL 36020	480 V, 20A	25 KAIC @ 240VAC
CB 2	CIRCUIT BREAKER	SQUARE D	THREE POLE	HDL 36020	480 V, 20A	
CB 3	CIRCUIT BREAKER	SQUARE D	THREE POLE	HDL 36015	480 V, 15A	
CB 4, 5, 6, 7, 8, 9, 10, 11	CIRCUIT BREAKER	SQUARE D	SINGLE POLE	QOU-115	120 V, 15A	
M1, 2	MOTOR STARTER	CUTLER-HAMMER	NEMA SIZE 2	AN16GNOAB	120V (COIL)	15HP (MAX)
OL1, 2	OVERLOAD RELAY	CUTLER-HAMMER	BIMETALLIC, AMBIENT COMPENSATED	H2011B-3	9.14-14.0A	
CA1, CA2	CIRCUIT SENSOR	ENERCORP INSTRUMENTS	4-20mA OUTPUT	SC200-2	0 - 100A	ADJUSTABLE RANGE
PL1, PL4	INDICATOR LIGHT	SQUARE D	CLASS 9001	SKT - 38LYA9	120 V, LED TYPE	YELLOW LENS & PRESS TEST
PL2, PL3	INDICATOR LIGHT	SQUARE D	CLASS 9001	SKT - 38LRR9	120 V, LED TYPE	RED LENS & PRESS TEST
PL5, PL6	INDICATOR LIGHT	SQUARE D	CLASS 9001	SKT - 38LRR9	120 V, LED TYPE	RED LENS & PRESS TEST
S1, S2	HOA SWITCH ASSEMBLY	SQUARE D	OIL-TIGHT CLASS 9001	SKS - 43B H2	10A @ 120V	
ETM1, ETM2	ELAPSED TIME METER	CRAMER	ROUND BEZEL, NON RESET	635E	120 V	W.W. GRANGER CAT. NO. 6X144
ZS1, ZS2	CONTROL PNL INTRUSION SENSOR	OMRON	CYLINDRICAL, SHORT BARREL	E2F-X5F1 (GRAINGER-1EA77)	12-24VDC, 3-WIRE PNP	W/ TELEMECANIQUE MTG. BRACKET (GRAINGER - 5B233)
FF1, FF2 & TS	LED LIGHTING FIXTURE	HOFFMAN	LED	LEDA1S35	120 V, 5W	W/TOGGLE SWITCH-TS
WR1	WALL RECEPTACLE	HUBBELL	DUPLEX W/GFI	GF5262	120V AC, 15A GFI	W/ALUMINUM OUTLET BOX AND COVER
SPD-1	SURGE PROTECTIVE DEVICE TYPE 1	ADVANCED PROTECTION TECHNOLOGIES	MOTOR CONTROL PANEL SPD	TEO2XDS104X	208/120 V, 3ø, 4W	
TB1, TB2, TB3, TB4	TERMINALS	PHOENIX CONTACT		UK5N TERMINALS	30 A W/ ALUM. DIN RAIL	50 CONTACTS (MIN)
ITS	INSULATED TERMINAL STRIP	ALLEN-BRADLEY	STYLE AA	1492-15-T	600 V AC NEUTRAL BLOCK	4 CONTACTS (MIN) W/ SHORTING BARS
GB1	GROUND BAR SYSTEM	PANDUIT	12 PORT WITH MAIN LUG	UGB2/0-414-12		COPPER CONSTRUCTION
GB2	GROUNDING BLOCK	ILSCO	AS REQUIRED	AS REQUIRED		
MCP	MOTOR CONTROL PANEL ENCLOSURE	HOFFMAN	NEMA 4X, 3P LATCH, 42"x30"x12"	42"x30"x12" SS	304 SS, POWDER COATED WHITE	3P LATCH W/STOP KIT. EXTERNAL FINISH DURABLE RAL 9003 WHITE POWER COAT.
MP	ENCLOSURE PANEL	HOFFMAN	39" X 27", STEEL	A42P30	STEEL, 12 GAUGE	
TA1, TA2	CONTROL RELAY	POTTER & BRUMFIELD	8 PIN PLUG-IN	KRPA-11AG-120	120V AC COIL, 10A CONTACTS	DPDT W/ SOCKET AND HOLD DOWN SPRING
FM1, FM2	CONTROL RELAY	POTTER & BRUMFIELD	11 PIN PLUG-IN	KRPA-14AG-120	120V AC COIL, 10A CONTACTS	3PDT W/ SOCKET AND HOLD DOWN SPRING
LEV	WET WELL LEVEL SENSOR	PULSAR, INC.	ULTRASONIC	dB10 TRANSDUCER W/ BLACKBOX 130 TRANSMITTER PART #: 130-110-300-00P-KP-TROP	1 TD 32.8 FT RANGE 115VAC/24VDC POWERED W/ 4-20MA AND (2) RELAY OUT W/ KEY PAD, DISPLAY, AND TROPICALIZATION	CITY FORCES WILL PROVIDE ASSISTANCE WITH MOUNTING AND CALIBRATION
CR1, CR2	CONTROL RELAY	POTTER & BRUMFIELD	14-BLADE SQUARE PLUG-IN	KUP-L7A19-120	120V AC COIL, 10A CONTACTS	4PDT W/ SOCKET AND HOLD DOWN SPRING

PARTS SCHEDULE IS CONTINUED ON SHEET E15

NOTES:

1. ALARM FLOAT SWITCH WILL BE SUPPLIED BY WWD AND INSTALLED BY CONTRACTOR.
2. DIMENSIONS, ITEMS, OR ELEVATIONS MARKED "*" SHALL BE DETERMINED AFTER EQUIPMENT SELECTION.

PROJECT MANAGER:John Pacifici
C:\PW_WORK2\D0861421\EDG-PLTS-PARTS SCHEDULE 1 GRECO.DWG - E14 - PLOTTED 11/20/2018 3:39 PM BY STARK, THOMAS
FIELD BOOK INFORMATION:-

REV#	DATE	DESCRIPTION	BY

ALAN M. SCHWAB, P.E.
FLORIDA LICENSE NO. 61313

WADE TRIM
201 North Franklin Street, Suite 1350
Tampa, FL 33602
813.882.4373
www.wadetrim.com
Certificate of Authorization No.: 3952

CITY OF TAMPA, FLORIDA
GRECO PUMP STATION
REHABILITATION

PARTS SCHEDULE (SHT. 1 OF 2)

ISSUED FOR:	DATE:	BY:
90% PLANS	7-16-18	RGB
100% PLANS	11-20-18	RGB

JOB NO. TPA2007-01M

SHEET E14

© Wade Trim Group, Inc.

Greco PS Rehabilitation

PARTS SCHEDULE (CONTINUED)

SYMBOL		NAME	PART				REMARKS
			MAKE	TYPE	MODEL OR CAT. #	RATING	
PCSR		PLC BASED PUMP CONTROLLER, SCADA, AND RADIO SYSTEM	MOTOROLA CORP.	DUPLEX PUMP CONTROLLER BASED ON ACE 3600 PROGRAM CONTROLLER	ACE 3600 BASIC MODEL NO. RADIO PART #7509	1–AC POWER SUPPLY 85–264V W/ BAT CHARGER PAR #: V261	COORDINATE EFFORT W/ SCADA INTEGRATOR
	SLOTS 1 & 2		MOTOROLA CORP.	2–MIXED I/O AUXILLARY INTERFACE WILKERSON BOARD PART #: SIB V245/ V453	MOTORBO XPR5350 RADIO UNF RI: 403–470MHZ, PART #UE1078A	1– ACE CPU3640 PART #: V446	1– 10.0 Ah BATTERY PART #: V328
					MOTORBO ANALOG RADIO INSTALLATION KIT PART #FLN1059		
		1–3 I/O SLOT FRAM PART #: V103	1–20 PIN TB HOLDER KIT PART #: V158	1– 14x 14 METAL CHASSIS PART #: V214	1–ACE MIXED I/O MODULE–16DI, 4DO(EE), (4)±20mA ANALOG IN PART #: V245 W/ 24VDC PLUG–IN, FLOATING POWER SUPPLY # FPN1653A	1–40 PIN TB HOLDER KIT PART #: V153	
	10.0 Ah BATT.						
PM1, PM2, PM3, PM4		3–PHASE POWER MONITOR	ATC DIVERSIFIED ELECTRONICS	8 PIN PLUG–IN	SLA–230–ALA	230 VAC	W/ OPTIONAL 5–SEC RELEASE AND DIN RAIL SOCKET–RB08PC
PDB		PWR DIST. BLOCK	BUSSMANN/EATON	THREE POLE	PDBFS220	600 V, 175 AMP	BARRIER TERMINAL BLOCKS
FBD1, 2, 3, 4		FUSE BLOCK / DISCONNECT	ALLEN BRADLEY	THREE PHASE– HIGH INTER. CAP.	1492–FB3C30–L	600 VAC, 200KAIC	W/ BUSSMANN KTK–R–2 FAST ACTING, REJECTION FUSES
PC–1		BACKUP PUMP CONTROLLER	WILKERSON	DUPLEX LIFT STATION	DR1920	10 AMP CONTACTS	DIN RAIL MOUNTING
FL		FLOAT SWITCH	ANCHOR SCIENTIFIC	SPDT	S2ONONC	10 A @ 120 V	PROVIDED BY THE CITY INSTALLED BY CONTRACTOR
FTB1, 2		FUSED TERMINAL BLOCKS	PHOENIX CONTACT		UK 5–HESI	PROVIDE 1, 2, & 5A FUSES	PROVIDE COOPER BUSSMAN GDB SERIES FUSES
SLD1, SLD2		PUMP MONITORING UNIT	XYLEM		MINI–CAS 120	10A AT 240V AC	
PCP		PUMP CONTROL PANEL ENCLOSURE	HOFFMAN	NEMA 4X, 3P LATCH, 42"x36"x12"	42"x36"x12" SS	304 SS, POWDER COATED WHITE	3P LATCH W/STOP KIT. EXTERNAL FINISH DURABLE RAL 9003 WHITE POWER COAT.
PP		ENCLOSURE PANEL	HOFFMAN	39" X 33", STEEL	A42P36	STEEL, 12 GAUGE	
NB1, 2		NEUTRAL DISTRIBUTION BLOCK	BUSSMAN	SINGLE POLE	16220–1	600V, 175A	
F1		PROCESS METER	PRECISION DIGITAL	4 DIGIT, 1.2" DISPLAY	PD765–6RO–10		PROVIDE 4–20mA OUTPUT
ALS		AREA LIGHT SWITCH	HUBBELL	SINGLE–POLE	HBL1221	277V, 20A	
SPD–2		SURGE PROTECTION DEVICE TYPE 3	PHOENIX CONTACT	3 CONDUCTOR SYSTEM (L, N, G)	2856812	120V, 25A	
FDTS		FUSED DOUBLE THROW DISCONNECT SWITCH	EATON	SERVICE ENTRANCE RATED, HEAVY DUTY	DT322FWK	DT100 NK NEUTRAL KIT DS100 GK GROUND KIT 60A, 3–POLE, 240V AC	TIME DELAY CLASS RK5 FUSES (3) EDISON ECNR60 (3) EDISON ECNR60 (PROVIDE (3) SPARES FOR EA.)
MS		METER SOCKET	MILBANK	7 TERMINAL	UAP9701–X–QG–HSP	600 VAC, 200 AMP	ALUMINUM CONSTRUCTION
EC		EMERGENCY CONNECTOR	CROUSE & HINDS	ARKTITE	AREA10415–S22 W/ BACK BOX, ANGLE ADAPTER, 1–1/2 HUB AND SPRING COVER	600V 100 AMP	
LA		LIGHTNING ARRESTER	GENERAL ELECTRIC	TRANQUELL	9L15ECC001	650V	

NOTES:

1. ALARM FLOAT SWITCH WILL BE SUPPLIED BY WWD AND INSTALLED BY CONTRACTOR.
2. DIMENSIONS, ITEMS, OR ELEVATIONS MARKED "*" SHALL BE DETERMINED AFTER EQUIPMENT SELECTION.

PROJECT MANAGER: John Pacifici
C:\PW_WORK2\D0861421\EDG–PLTS–PARTS SCHEDULE 2 GRECO.DWG – E15 – PLOTTED 11/20/2018 3:39 PM BY STARK, THOMAS
FIELD BOOK INFORMATION:–

REV#	DATE	DESCRIPTION	BY

ALAN M. SCHWAB, P.E.
FLORIDA LICENSE NO. 61313

WADE TRIM
201 North Franklin Street, Suite 1350
Tampa, FL 33602
813.882.4373
www.wadetrim.com
Certificate of Authorization No.: 3952

CITY OF TAMPA, FLORIDA
GRECO PUMP STATION
REHABILITATION

PARTS SCHEDULE (SHT. 2 OF 2)

ISSUED FOR: DATE: BY:
90% PLANS 7–16–18 RGB
100% PLANS 11–20–18 RGB

JOB NO.
TPA2007–01M

SHEET
E15

© Wade Trim Group, Inc.

Greco PS Rehabilitation

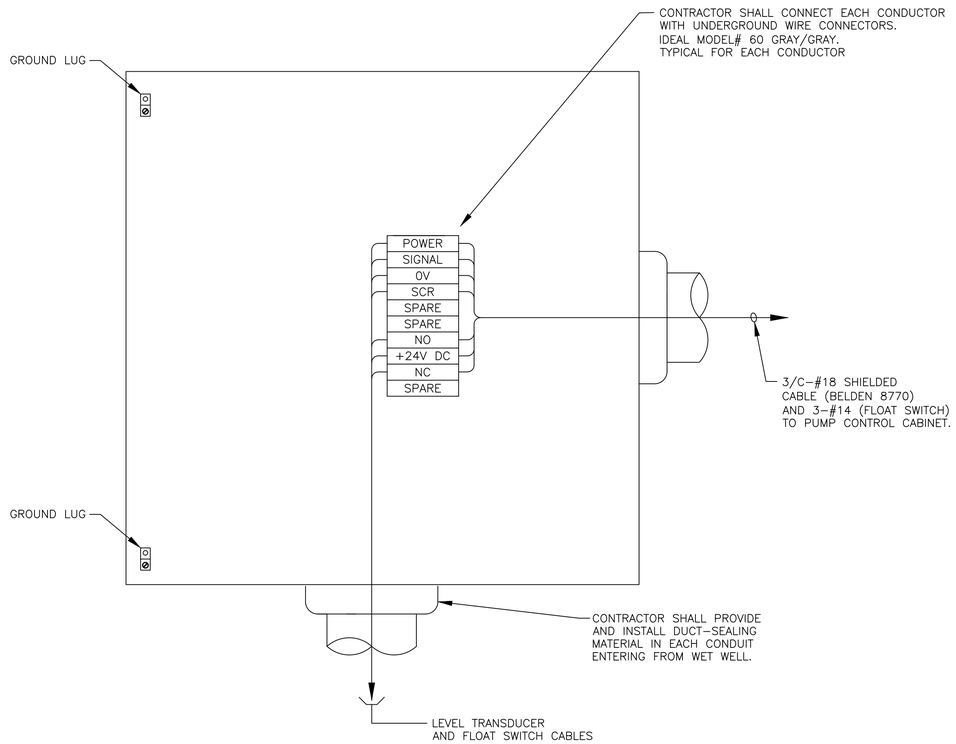

NOTES:

1. COVER NOT SHOWN FOR CLARITY
2. BOND GROUNDING CONDUCTORS TO ENCLOSURE BACK PANEL.

INSTRUMENTATION AND CONTROLS JUNCTION BOX DETAIL

N.T.S.

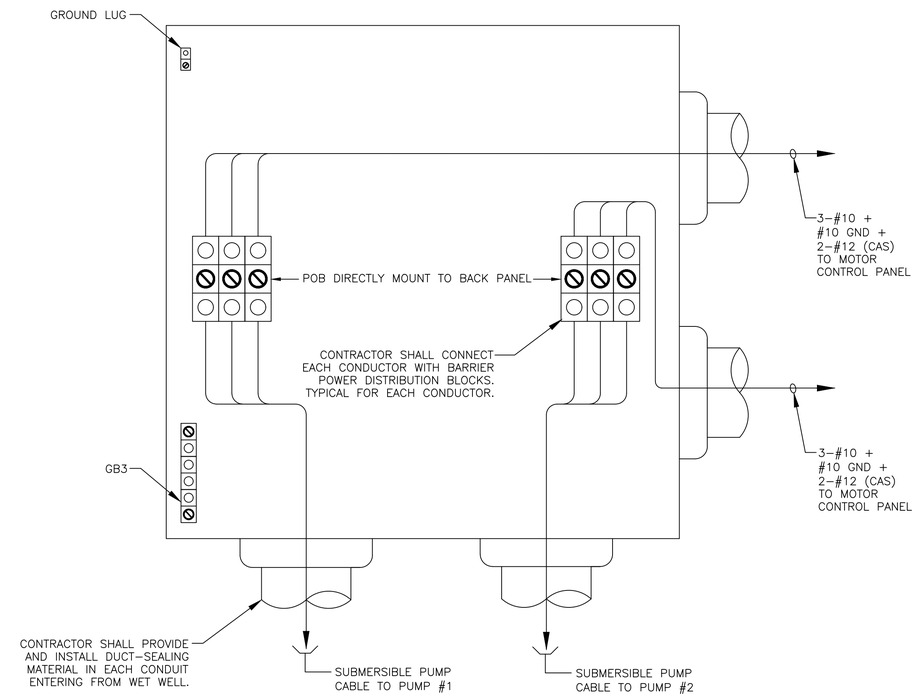

NOTES:

1. COVER NOT SHOWN FOR CLARITY
2. BOND GROUNDING CONDUCTORS TO ENCLOSURE BACK PANEL.

PUMP MOTOR CONNECTIONS JUNCTION BOX DETAIL

N.T.S.

NOTE:
ALL HINGED SURFACES SHALL BE GROUNDED WITH A BONDING JUMPER SECURED TO THE ENCLOSURE OR BACKPANEL.

PROJECT MANAGER: John Pacifici
C:\PW_WORK2\D0861421\EDG-PLTS-ELECTRICAL DETAILS 1 GRECO.DWG - E16 - PLOTTED 11/20/2018 3:39 PM BY STARK, THOMAS
FIELD BOOK INFORMATION:-

REV#	DATE	DESCRIPTION	BY

WADE TRIM
201 North Franklin Street, Suite 1350
Tampa, FL 33602
813.882.4373
www.wadetrim.com
Certificate of Authorization No.: 3952

CITY OF TAMPA, FLORIDA
GRECO PUMP STATION
REHABILITATION

ELECTRICAL DETAILS (SHT. 1 OF 5)

ISSUED FOR:	DATE:	BY:
90% PLANS	7-16-18	RGB
100% PLANS	11-20-18	RGB

JOB NO.: TPA2007-01M
SHEET: E16

Greco PS Rehabilitation

© Wade Trim Group, Inc.

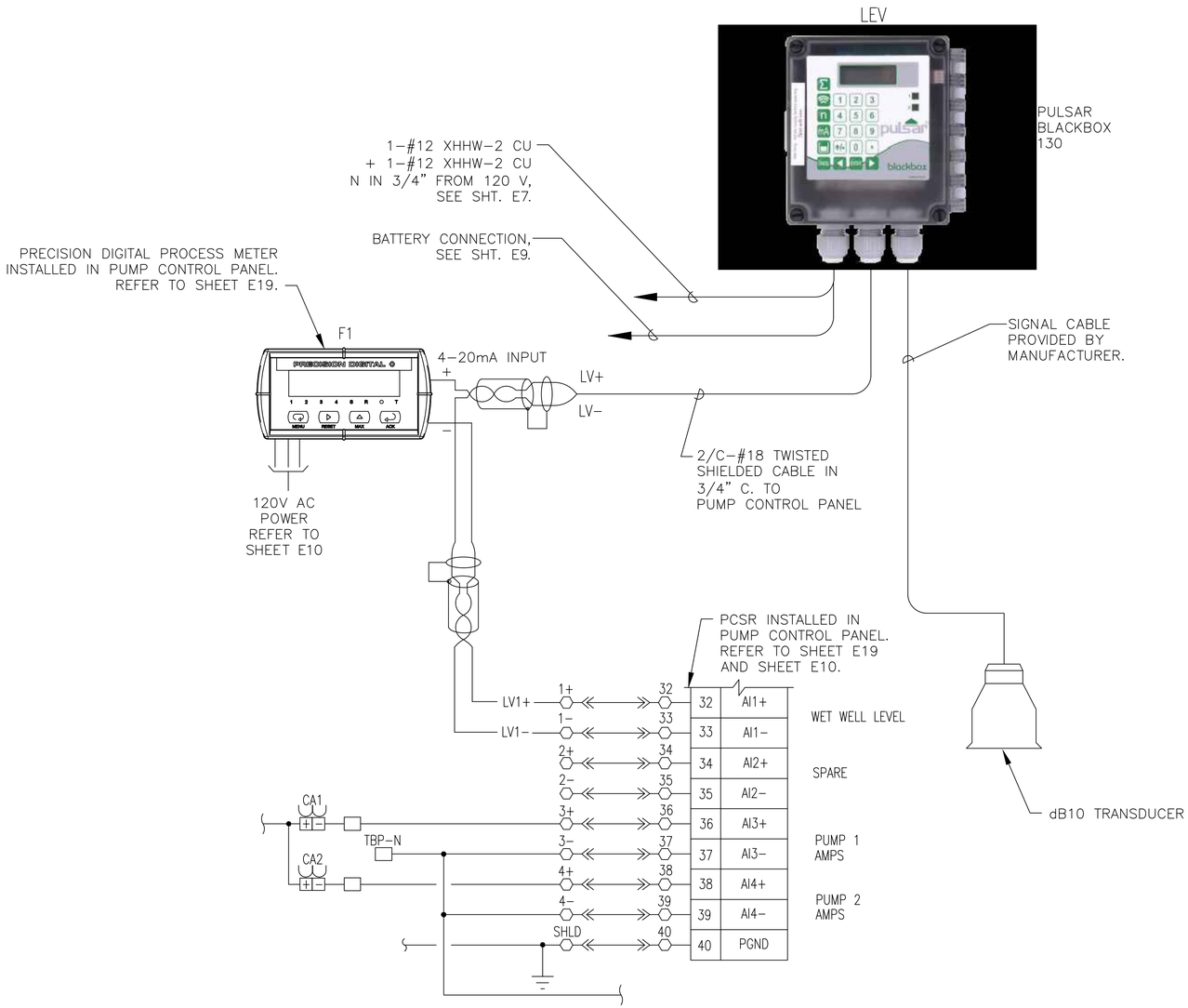

LEVEL TRANSDUCER WIRING SCHEMATIC

ALL WIRING TO BE VERIFIED/CONFIRMED WITH MANUFACTURER PRIOR TO INSTALLATION

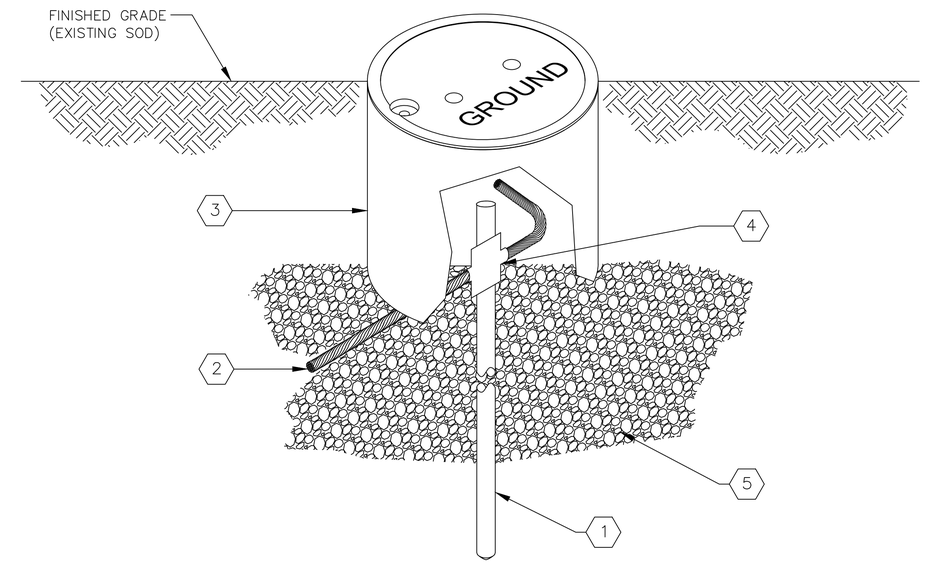

GROUND TEST WELL DETAIL KEYED NOTES:

1. NEW GROUND ROD, STAINLESS STEEL, 5/8" X 10'–0" (TYP).
2. #4 BARE STRANDED COPPER GROUNDING ELECTRODE CONDUCTOR (TYP).
3. PROVIDE AND INSTALL OLDCASTLE PRECAST ENCLOSURE SOLUTIONS #F08 BOX WITH #F08C CAST IRON LID MARKED "GROUND".
4. EXOTHERMIC WELD.
5. PROVIDE 6" MINIMUM OF CRUSHED STONE.

GROUNDING TEST WELL DETAIL

SCALE: N.T.S.

PROJECT MANAGER:John Pacifici
C:\PW_WORK2\D0861421\EDG-PLTS-ELECTRICAL DETAILS 2 GRECO.DWG – FIELD BOOK INFORMATION:– E17 – PLOTTED 11/20/2018 3:39 PM BY STARK, THOMAS

REV#	DATE	DESCRIPTION	BY

ALAN M. SCHWAB, P.E.
FLORIDA LICENSE NO. 61313

WADE TRIM
201 North Franklin Street, Suite 1350
Tampa, FL 33602
813.882.4373
www.wadetrim.com
Certificate of Authorization No.: 3952

CITY OF TAMPA, FLORIDA
GRECO PUMP STATION
REHABILITATION

ELECTRICAL DETAILS (SHT. 2 OF 5)

ISSUED FOR: DATE: BY:
90% PLANS 7–16–18 RGB
100% PLANS 11–20–18 RGB

JOB NO. TPA2007–01M

SHEET E17

Greco PS Rehabilitation

© Wade Trim Group, Inc.

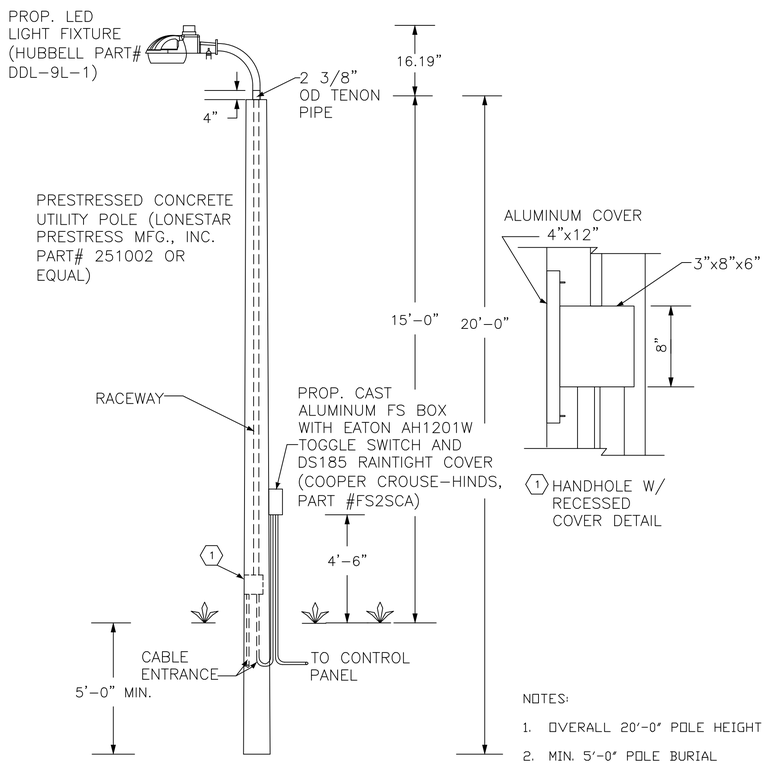

NOTES:

1. OVERALL 20'-0" POLE HEIGHT
2. MIN. 5'-0" POLE BURIAL
3. COORDINATE LOCATION OF THE AREA LIGHT WITH PLANT PERSONNEL
4. USE STAINLESS STEEL PIPE STRAPS SPACED 2'-0" APART TO MOUNT CONDUIT

AREA LIGHT (AL) DETAIL

SCALE: N.T.S.

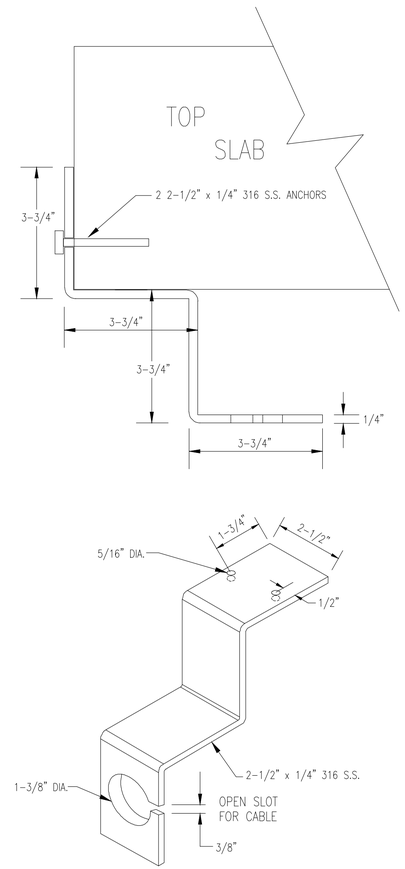

NOTE:

ROUND OVER ALL EDGES,
RADIUS ALL CORNERS

DBI0 OR PULSAR MOUNTING BRACKET DETAIL

SCALE: N.T.S.

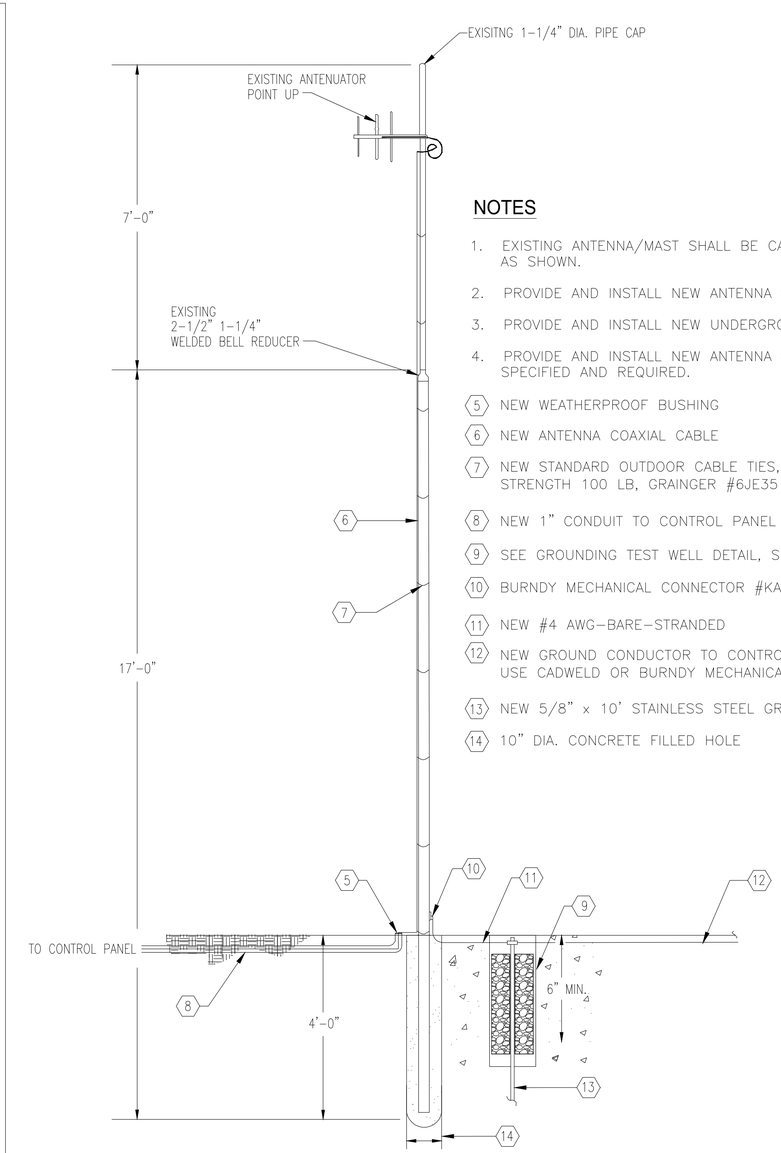

NOTES

1. EXISTING ANTENNA/MAST SHALL BE CAREFULLY REMOVED AND RELOCATED, AS SHOWN.
2. PROVIDE AND INSTALL NEW ANTENNA COAX CABLE, AS REQUIRED.
3. PROVIDE AND INSTALL NEW UNDERGROUND CONDUIT, AS REQUIRED.
4. PROVIDE AND INSTALL NEW ANTENNA GROUNDING SYSTEM, AS SHOWN, SPECIFIED AND REQUIRED.

5. NEW WEATHERPROOF BUSHING
6. NEW ANTENNA COAXIAL CABLE
7. NEW STANDARD OUTDOOR CABLE TIES, 304 STAINLESS STEEL, TENSILE STRENGTH 100 LB, GRAINGER #6JE35
8. NEW 1" CONDUIT TO CONTROL PANEL
9. SEE GROUNDING TEST WELL DETAIL, SHEET E17
10. BURNDY MECHANICAL CONNECTOR #KA25-4-1/0
11. NEW #4 AWG-BARE-STRANDED
12. NEW GROUND CONDUCTOR TO CONTROL PANEL GROUNDING SYSTEM, USE CADWELD OR BURNDY MECHANICAL CONNECTOR #VT2525
13. NEW 5/8" x 10' STAINLESS STEEL GROUND ROD
14. 10" DIA. CONCRETE FILLED HOLE

ANTENNA DETAIL

SCALE: N.T.S.

REV#	DATE	DESCRIPTION	BY

ALAN M. SCHWAB, P.E.
FLORIDA LICENSE NO. 61313

WADE TRIM
201 North Franklin Street, Suite 1350
Tampa, FL 33602
813.882.4373
www.wadetrim.com
Certificate of Authorization No.: 3952

CITY OF TAMPA, FLORIDA
GRECO PUMP STATION
REHABILITATION

ELECTRICAL DETAILS (SHT. 3 OF 5)

ISSUED FOR: DATE: BY:
90% PLANS 7-16-18 RGB
100% PLANS 11-20-18 RGB

JOB NO. TPA2007-01M

SHEET E18

© Wade Trim Group, Inc.

Greco PS Rehabilitation

PROJECT MANAGER:John Pacifici
C:\PW_WORK2\D0861421\EDG-PLTS-ELECTRICAL DETAILS 3 GRECO.DWG - E18 - PLOTTED 11/20/2018 3:40 PM BY STARK, THOMAS
FIELD BOOK INFORMATION:-

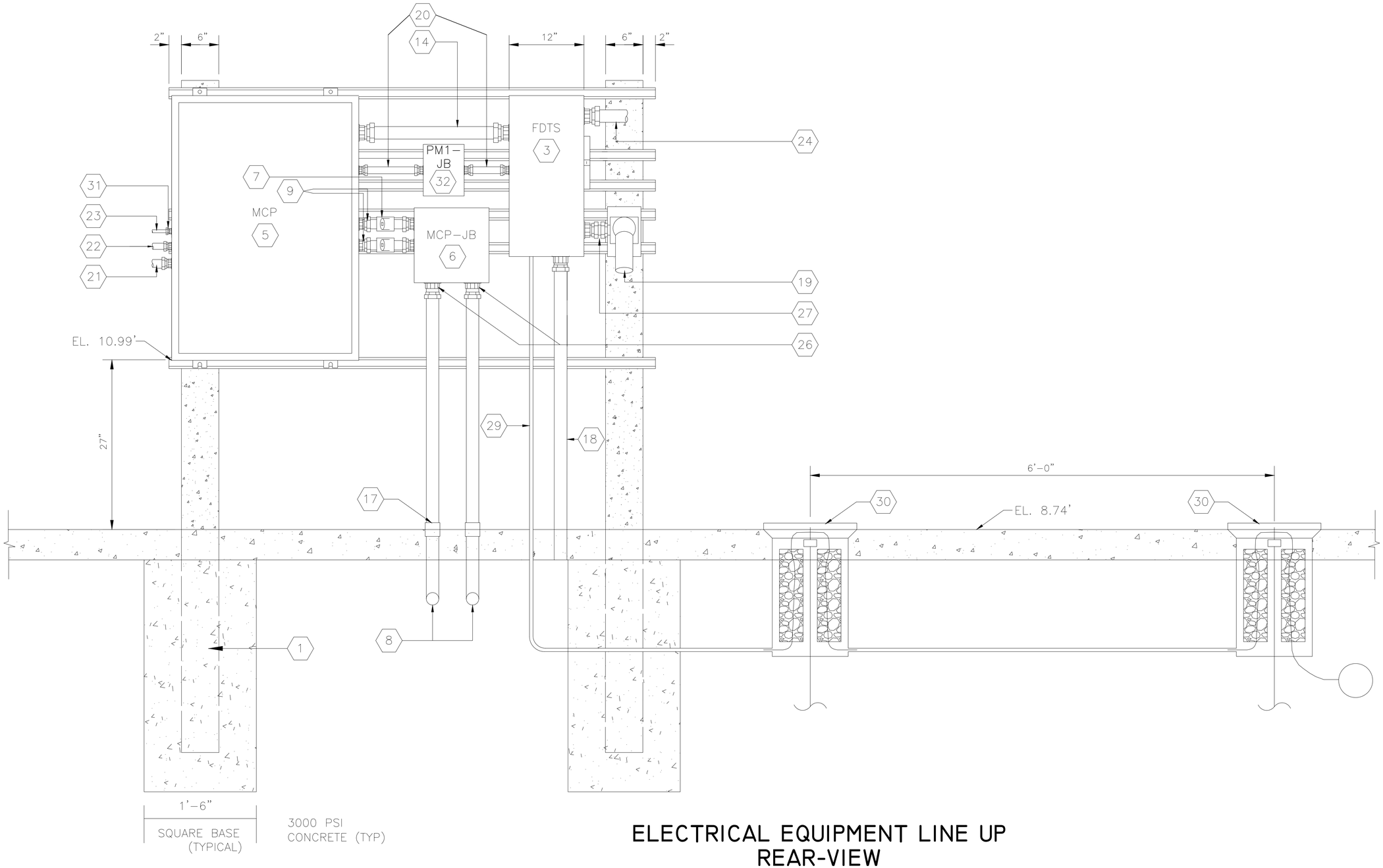

ELECTRICAL EQUIPMENT LINE UP
REAR-VIEW

SCALE: 1/2" =1'-0"

PROJECT MANAGER:John Pacifici
C:\PW_WORK2\D0861421\EDG-PLTS-ELECTRICAL DETAILS 4 GRECO.DWG – E18A – PLOTTED 11/20/2018 3:40 PM BY STARK, THOMAS FIELD BOOK INFORMATION:–

REV#	DATE	DESCRIPTION	BY

ALAN M. SCHWAB, P.E.
FLORIDA LICENSE NO. 61313

WADE TRIM

201 North Franklin Street, Suite 1350
Tampa, FL 33602
813.882.4373
www.wadetrim.com
Certificate of Authorization No.: 3952

CITY OF TAMPA, FLORIDA
GRECO PUMP STATION
REHABILITATION

ELECTRICAL DETAILS (SHT. 4 OF 5)

ISSUED FOR:	DATE:	BY:
90% PLANS	7-16-18	RGB
100% PLANS	11-20-18	RGB

JOB NO. TPA2007-01M

SHEET E18A

Greco PS Rehabilitation

© Wade Trim Group, Inc.

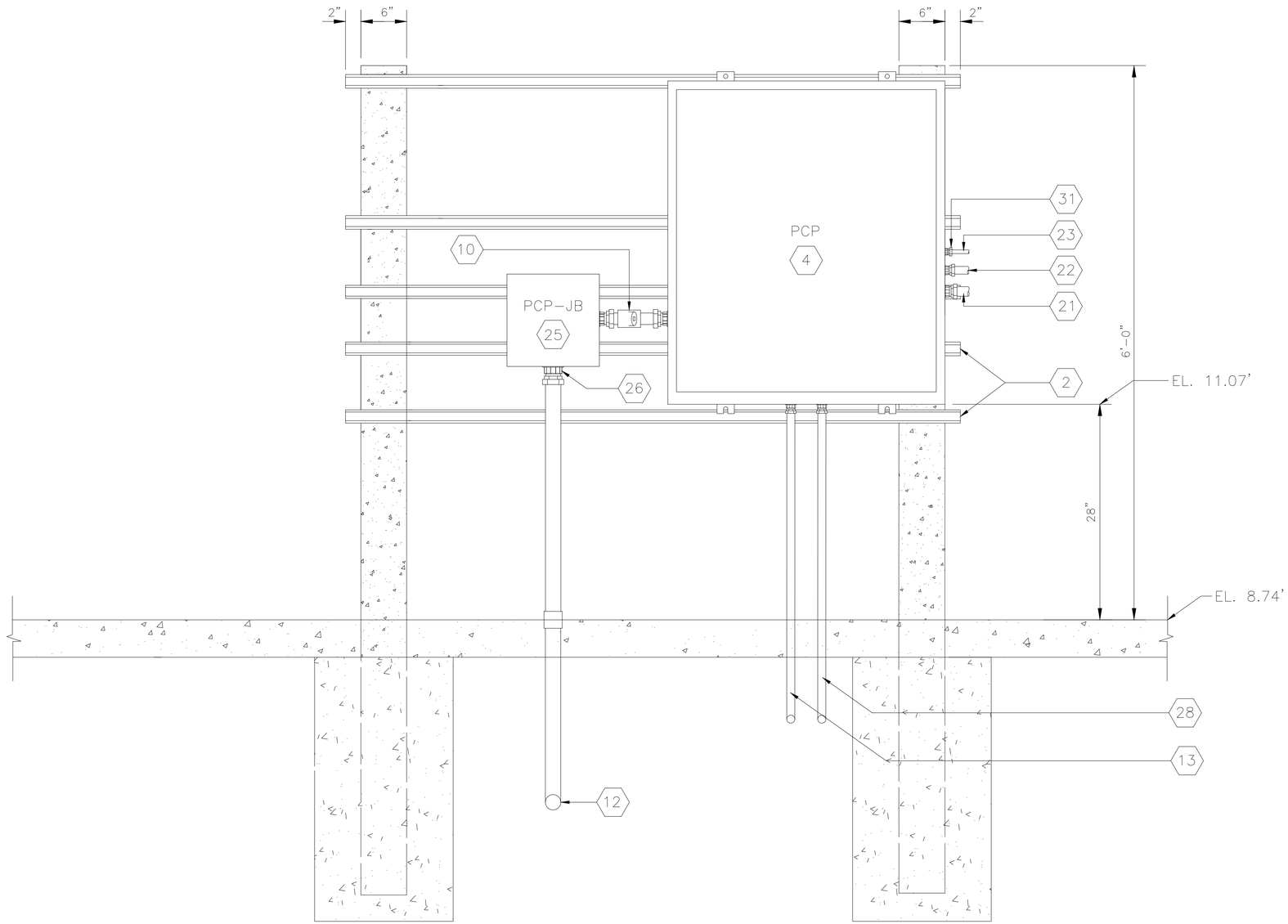

ELECTRICAL EQUIPMENT LINE UP
FRONT-VIEW

SCALE: 1/2" =1'-0"

PROJECT MANAGER: John Pacifici
C:\PW_WORK2\D0861421\EDG-PLTS-ELECTRICAL DETAILS 5 GRECO.DWG - E18B - PLOTTED 11/20/2018 3:40 PM BY STARK, THOMAS
FIELD BOOK INFORMATION:-

REV#	DATE	DESCRIPTION	BY

ALAN M. SCHWAB, P.E.
FLORIDA LICENSE NO. 61313

WADE TRIM
201 North Franklin Street, Suite 1350
Tampa, FL 33602
813.882.4373
www.wadetrim.com
Certificate of Authorization No.: 3952

CITY OF TAMPA, FLORIDA
CORDELIA PUMP STATION
REHABILITATION

ELECTRICAL DETAILS (SHT. 5 OF 5)

ISSUED FOR:	DATE:	BY:
90% PLANS	7-16-18	RGB
100% PLANS	11-20-18	RGB

JOB NO.: TPA2007-01M

SHEET: E18B

Cordelia PS Rehabilitation

© Wade Trim Group, Inc.

KEYED NOTES:

1. PROVIDE AND INSTALL THREE (3) 6" X 6" x 10' REINFORCED SQUARE CONCRETE POSTS.
2. PROVIDE AND INSTALL 1-5/8" x 1-5/8" 316 STAINLESS STEEL UNISTRUT WITH 316 STAINLESS STEEL HARDWARE. NOTE: INSTALL ALL BOLTS FOR UNISTRUT COMPLETELY THROUGH CONCRETE POSTS.
3. PROVIDE AND INSTALL SERVICE ENTRANCE RATED HEAVY DUTY, DOUBLE THROW, FUSIBLE SWITCH, 3-POLE, 240 VAC, 60 AMP IN NEMA 4X TYPE ENCLOSURE, 240 VOLT, DUAL-ELEMENT, TIME-DELAY CLASS RK5 FUSES; SWITCH--EATON DT322FWK, DT100NK NEUTRAL KIT, DS100GK GROUND LUG KIT, DS36FK- "R" FUSE ADAPTER KIT.
4. PROVIDE AND INSTALL PUMP CONTROL CABINET. REFER TO DETAIL ON SHEET E19.
5. PROVIDE AND INSTALL MOTOR CONTROL CABINET. REFER TO DETAIL ON SHEET E20.
6. PUMP MOTOR CONNECTIONS J.B.-USED AS A DEMARCATION BOX TO PROVIDE ISOLATION BETWEEN THE WET WELL AND PUMP CONTROLS. PROVIDE AND INSTALL A 12"x12"x6" NEMA 4X, STAINLESS STEEL JUNCTION BOX WITH HINGED DOOR, WIEGMANN #BN4121206CHSS. INSTALL A STAINLESS STEEL LOUVER PLATE KIT (4.75"x 4.5") ON SIDE OF BOX TO PROVIDE NATURAL ASPIRATION, WIEGMANN #WAVK0304SSA. TERMINATIONS SHALL BE MADE (TYPICAL FOR EACH CONDUCTOR) SEE SHEET E16 FOR JB DETAILS.
7. PROVIDE AND INSTALL CROUSE-HINDS EYS TYPE SEALS W/CHICO COMPOUNDS.
8. PROPOSED 2" PVC COATED ALUMINUM CONDUITS FOR MOTOR CONDUCTORS. INSTALL CONDUIT AS DESCRIBED IN NOTE 1 OF SHEET E4.
9. PROVIDE AND INSTALL (3)-#10 XHHW-2 CU + (1)-#10 XHHW-2 CU GND + (2)-#12 XHHW-2 CU (LEAK/TEMP) IN 1" CONDUIT FOR SUBMERSIBLE PUMP POWER.
10. PROVIDE AND INSTALL (3)-#14 XHHW-2 CU + (1)-#14 XHHW-2 CU GND + (1)-3/C-#18 TWISTED SHIELDED CABLE IN 1" CONDUIT FOR FLOAT AND WET WELL LEVEL TRANSMITTER.
11. NOT USED.
12. PROPOSED 2" PVC COATED ALUMINUM CONDUIT FOR I&C CONDUCTORS. INSTALL CONDUIT AS DESCRIBED IN NOTE 2 OF SHEET E4.
13. PROVIDE AND INSTALL 1" CONDUIT FOR ANTENNA COAXIAL CABLE REFER TO SHEET E4 and E18 FOR CONTINUATION.
14. PROVIDE AND INSTALL (3)-#3 THWN CU, (1)-#4 THWN NEU, AND (1)-#6 THWN CU GND. IN 2" CONDUIT.
15. PROVIDE AND INSTALL ALUMINUM CONDUIT STRAPS (TYPICAL).
16. NOT USED.
17. FOR UNDERGROUND RACEWAYS TO WETWELL THE CONTRACTOR SHALL UTILIZE PVC COATED ALUMINUM.
18. PROVIDE AND INSTALL (3)-#3 AWG + (1)-#4 NEU. IN 2" CONDUIT TO INTERCEPT EXISTING CONDUIT TO LIGHTING PANEL. SEE SHEET E4 FOR CONTINUATION.
19. PROVIDE AND INSTALL AN EMERGENCY CONNECTOR.
20. PROVIDE AND INSTALL (3)-#12 XHHW-2 CU + (1)# 12 XHHW-2 CU GND. IN 3/4" C.
21. PROVIDE AND INSTALL (26)-#12 XHHW-2 CU + (1)# 12 XHHW-2 CU GND. IN 1-1/4" C. FOR 120VAC CONTROL SIGNALS. REFER TO MCP TO PCP INTERCONNECTIONS WIRING DIAGRAM ON SHEET E11.
22. PROVIDE AND INSTALL (15)-#14 XHHW-2 CU + (1)-#14 XHHW-2 CU GND. IN 1" C. FOR 24V DC CONTROL SIGNALS, REFER TO MCP TO PCP INTERCONNECTION WIRING DIAGRAM ON SHEET E11.
23. PROVIDE AND INSTALL (1)-#12 XHHW-2 CU NUE. + (1)#12 XHHW-2 CU GND. IN 3/4" CONDUIT FROM MOTOR CONTROLS PANEL TO PUMP CONTROL PANEL FOR 120V POWER CIRCUIT.
24. NOT USED.
25. INSTRUMENTATION AND CONTROLS J.B.-USED AS DEMARCATION BOX TO PROVIDE ISOLATION BETWEEN THE WET WELL AND PUMP CONTROLS. PROVIDE AND INSTALL A 12"x12"x6" NEMA 4X, STAINLESS STEEL JUNCTION BOX WITH HINGED DOOR, WIEGMANN #BN4121206CHSS. INSTALL A STAINLESS STEEL LOUVER PLATE KIT (4.75"x4.5") ON SIDE OF BOX TO PROVIDE NATURAL ASPIRATION, WIEGMANN #WAVK0304SSA. TERMINATIONS SHALL BE MADE WITH UNDERGROUND WIRE CONNECTORS - IDEAL MODEL #60 - (TYPICAL FOR EACH CONDUCTOR). SEE SHEET E16 FOR JB DETAILS.
26. PROVIDE DUCT SEALING COMPOUND IN ALL CONDUITS EXTENDING TO THE WET WELL.
27. PROVIDE AND INSTALL (3)-#3 XHHW-2 CU + (1)-#4 XHHW-2 CU NEU + (1)-#6 XHHW-2 CU GND IN 1-1/4" CONDUIT FOR EMERGENCY CONNECTOR.
28. PROVIDE AND INSTALL A 3/4" CONDUIT TO PROPOSED AREA LIGHT, (AL), SEE SHT. E18 FOR DETAILS.
29. PROVIDE AND INSTALL A 3/4" SCHEDULE 80 PVC CONDUIT FOR #4 AWG GROUNDING CONDUCTOR.
30. PROPOSED GROUND TEST WELL. MINIMUM SPACING BETWEEN WELLS 6'-0". SEE SHEET E17 FOR DETAILS.
31. PROVIDE AND INSTALL WATER-TIGHT / DUST-TIGHT MYERS HUB AND UNION (TYP.).
32. PM1 J.B.- PROVIDE AND INSTALL A 8"x6"x3.5" NEMA 4X, STAINLESS STEEL JUNCTION BOX, ENCLOSURE PART NUMBER EJ863516. SEE E21 FOR JB DETAILS.

PROJECT MANAGER:John Pacifici
C:\PW_WORK2\D0861421\EDG-PLTS-KEYNOTES GRECO.DWG - E18C - PLOTTED 11/20/2018 3:40 PM BY STARK, THOMAS
FIELD BOOK INFORMATION:-

REV#	DATE	DESCRIPTION	BY

ALAN M. SCHWAB, P.E.
FLORIDA LICENSE NO. 61313

WADE TRIM
201 North Franklin Street, Suite 1350
Tampa, FL 33602
813.882.4373
www.wadetrim.com
Certificate of Authorization No.: 3952

CITY OF TAMPA, FLORIDA
GRECO PUMP STATION
REHABILITATION

ELECTRICAL KEYNOTES

ISSUED FOR:	DATE:	BY:
90% PLANS	7-16-18	RGB
100% PLANS	11-20-18	RGB

JOB NO. TPA2007-01M

SHEET E18C

© Wade Trim Group, Inc.

Greco PS Rehabilitation

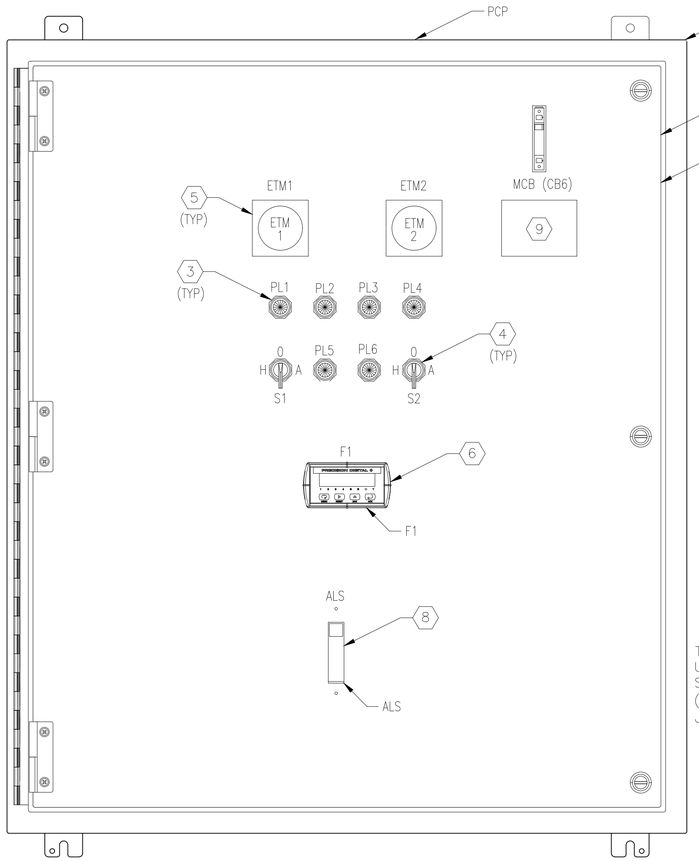

PUMP CONTROL PANEL DETAILS

SCALE: 1 1/2" = 1'-0"

NOTE: FRONT ENCLOSURE DOOR NOT SHOWN FOR CLARITY

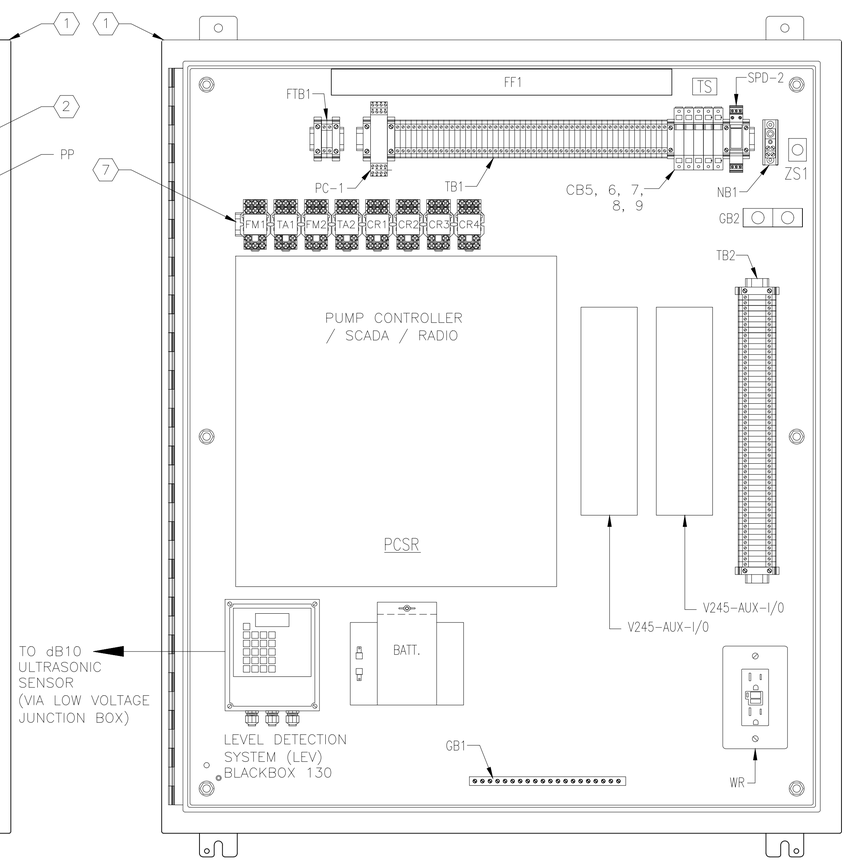

PANEL INTERIOR

LEGEND PLATE SCHEDULE

SYMBOL	DEVICE	LEGEND
ETM1	ELAPSED TIME METER	PUMP NO. 1 HOURS
ETM2	ELAPSED TIME METER	PUMP NO. 2 HOURS
PL1	YELLOW PILOT LIGHT	PUMP NO. 1 ON
PL2	RED ILLUMINATED PUSH BUTTON	PUMP NO. 1 TEMP. ALARM
PL3	RED ILLUMINATED PUSH BUTTON	PUMP NO. 2 TEMP. ALARM
PL4	YELOW PILOT LIGHT	PUMP NO. 2 ON
PL5	RED PILOT LIGHT	PUMP NO. 1 SEAL LEAK ALARM
PL6	RED PILOT LIGHT	PUMP NO. 2 SEAL LEAK ALARM
S1	3 POSITION SWITCH	PUMP NO. 1 HAND-OFF-AUTO
S2	3 POSITION SWITCH	PUMP NO. 2 HAND-OFF-AUTO
MCB	PUMP CONTROL PANEL MAIN CIRCUIT BREAKER	MAIN CIRCUIT BREAKER
F1	DIGITAL PROCESS METER	WET WELL LEVEL
ALS	TOGGLE SWITCH	AREA LIGHT SWITCH

KEYED NOTES:

1. PUMP CONTROL CABINET. 42" X 36" X 12" NEMA 4X SS, PAINTED WHITE.
2. PROVIDE AND INSTALL ALUMINUM DEADFRONT DOOR WITH STOP KIT.
3. PROVIDE AND INSTALL NEW PILOT LIGHT. REFER ALSO TO PARTS SCHEDULE ON SHEET E14.
4. PROVIDE AND INSTALL NEW SELECTOR SWITCH. REFER ALSO TO PARTS SCHEDULE ON SHEET E14.
5. PROVIDE AND INSTALL NEW ELAPSED TIME METER. REFER ALSO TO PARTS SCHEDULE ON SHEET E14.
6. PROVIDE AND INSTALL PRECISION DIGITAL PROCESS METER, MODEL PD765-6R0-10 WITH 4-20mA OUTPUT. REFER ALSO TO PARTS SCHEDULE ON SHEET E15.
7. PROVIDE AND INSTALL ALUMINUM DIN RAIL WHERE REQUIRED.
8. PROVIDE AND INSTALL NEW SINGLE-POLE 120/277V, 20A LIGHT SWITCH TO CONTROL AREA LIGHT. REFER ALSO TO PARTS SCHEDULE ON SHEET E15.
9. PROVIDE WARNING LABEL ABOVE OR BELOW CB6. LABEL TO READ:
   "WARNING: THE 120VAC SUPPLY FOR THIS PUMP CONTROL PANEL (PCP) IS FED FROM MOTOR CONTROL PANEL MCP AND WILL BE PRESENT AT THE LINE SIDE OF MCB (CB-6) LOCATED IN THIS PANEL. LOCK AND TAG OUT THE MOTOR CONTROL PANEL DISCONNECT PRIOR TO OPENING DEAD FRONT DOOR."

PROJECT MANAGER:John Pacifici
C:\PW_WORK2\0086142\EDG-PLTS-PUMP CONTROL PANEL DETAILS GRECO.DWG - E19 - PLOTTED 11/20/2018 3:40 PM BY STARK, THOMAS
FIELD BOOK INFORMATION:-

REV#	DATE	DESCRIPTION	BY

ALAN M. SCHWAB, P.E.
FLORIDA LICENSE NO. 61313

WADE TRIM
201 North Franklin Street, Suite 1350
Tampa, FL 33602
813.882.4373
www.wadetrim.com
Certificate of Authorization No.: 3952

CITY OF TAMPA, FLORIDA
GRECO PUMP STATION
REHABILITATION

PUMP CONTROL PANEL DETAILS

ISSUED FOR:	DATE:	BY:
90% PLANS	7-16-18	RGB
100% PLANS	11-20-18	RGB

JOB NO. TPA2007-01M

SHEET E19

© Wade Trim Group, Inc.

Greco PS Rehabilitation

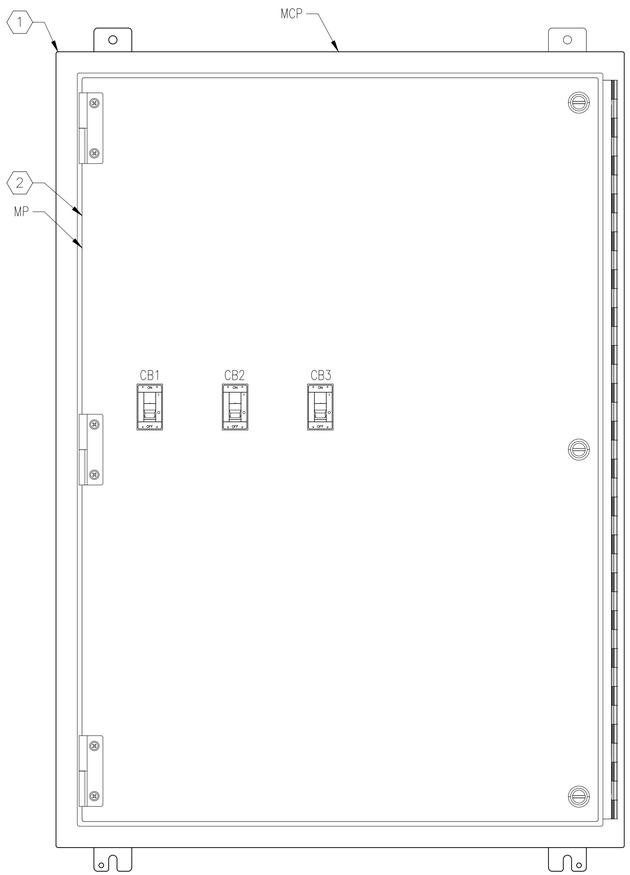

MOTOR CONTROL PANEL
DETAILS

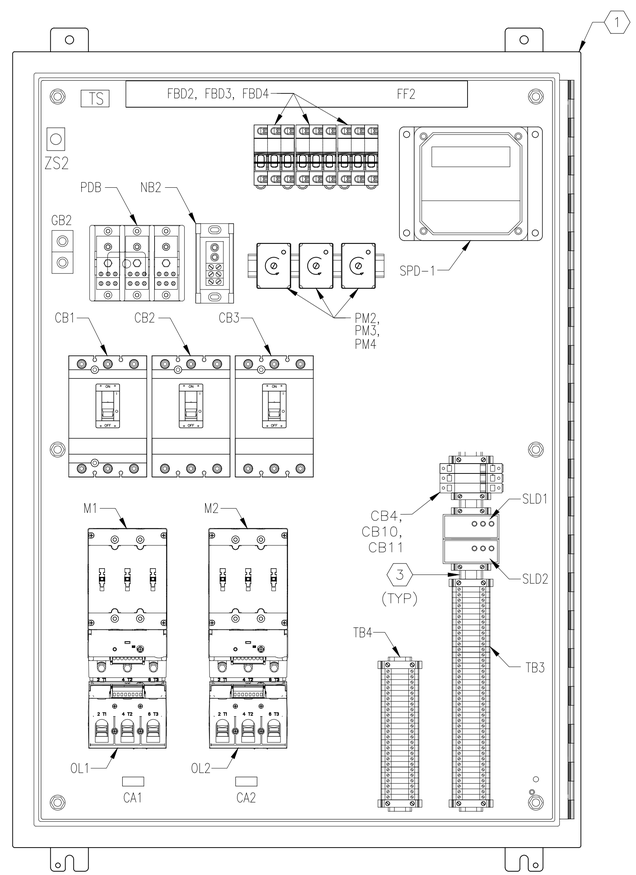

PANEL INTERIOR
DETAILS

LEGEND PLATE SCHEDULE

SYMBOL	DEVICE	LEGEND
CB1	CIRCUIT BREAKER	PUMP NO. 1 CIRCUIT BREAKER
CB2	CIRCUIT BREAKER	PUMP NO. 2 CIRCUIT BREAKER
CB3	CIRCUIT BREAKER	SPARE CIRCUIT BREAKER

KEYED NOTES:

1. MOTOR CONTROL CABINET. 42" X 30" X 12" NEMA 4X SS, POWDER COAT WHITE.
2. PROVIDE AND INSTALL ALUMINUM DEADFRONT DOOR WITH STOP KIT.
3. PROVIDE AND INSTALL ALUMINUM DIN RAIL WHERE REQUIRED.
4. PROVIDE WARNING LABEL ON ENCLOSURE DOOR.
   LABEL TO READ:
   "WARNING – OPENING FUSED DOUBLE THROW SWITCH DOES NOT DE–ENERGIZE VOLTAGE TO THIS ENCLOSURE"
5. SEE SHEET E21 FOR FURTHER PM1 JUNCTION BOX DETAIL.

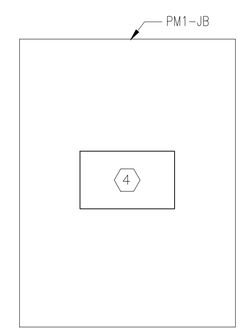

PM1 JUNCTION BOX
DETAILS 5

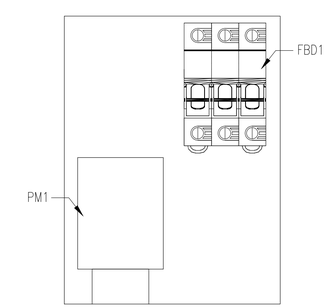

JUNCTION BOX INTERIOR
DETAILS 5

PROJECT MANAGER: John Pacifici
C:\PW_WORK2\D0861421\EDG-PLTS-MOTOR CONTROL PANEL DETAILS GRECO.DWG - E20 - PLOTTED 11/20/2018 3:40 PM BY STARK, THOMAS
FIELD BOOK INFORMATION:-

REV#	DATE	DESCRIPTION	BY

ALAN M. SCHWAB, P.E.
FLORIDA LICENSE NO. 61313

WADE TRIM
201 North Franklin Street, Suite 1350
Tampa, FL 33602
813.882.4373
www.wadetrim.com
Certificate of Authorization No.: 3952

CITY OF TAMPA, FLORIDA
GRECO PUMP STATION
REHABILITATION

MOTOR CONTROL PANEL DETAILS

ISSUED FOR:	DATE:	BY:
90% PLANS	7-16-18	RGB
100% PLANS	11-20-18	RGB

JOB NO. TPA2007-01M
SHEET E20

© Wade Trim Group, Inc.
Greco PS Rehabilitation

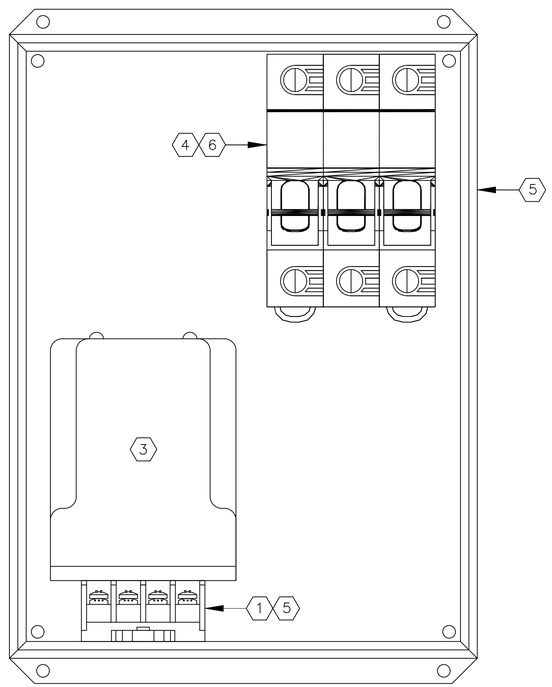

FRONT VIEW
N.T.S.

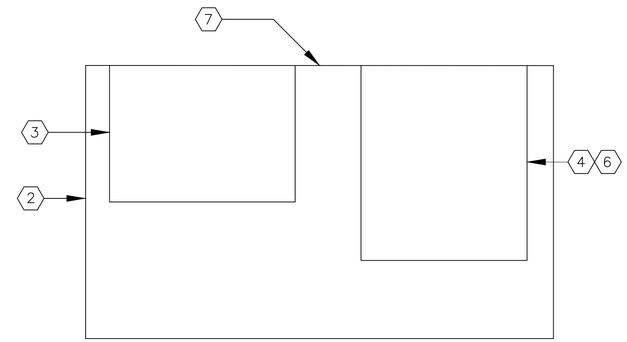

TOP VIEW
N.T.S.

KEYED NOTES:

1. 8 PIN OCTAL SOCKET, DIN RAIL MOUNTED OT08
2. NEMA 4X STAINLESS STEEL, 8"x 6"x 3.5" ENCLOSURE PART NUMBER EJ863516
3. 3-PHASE POWER MONITOR, PM1
4. FUSE DISTRIBUTION BLOCK, FDB1
5. MOUNTED TO BOTTOM OF ENCLOSURE
6. DIRECTLY MOUNTED TO BACK OF ENCLOSURE
7. BACK OF ENCLOSURE

PM1 JUNCTION BOX DETAIL

PROJECT MANAGER:John Pacifici
C:\PW_WORK2\D0861421\EDG-PLTS-PM1 ENCLOSURE DETAIL GRECO.DWG - E21 - PLOTTED 11/20/2018 3:40 PM BY STARK, THOMAS
FIELD BOOK INFORMATION:-

REV#	DATE	DESCRIPTION	BY

ALAN M. SCHWAB, P.E.
FLORIDA LICENSE NO. 61313

WADE TRIM
201 North Franklin Street, Suite 1350
Tampa, FL 33602
813.882.4373
www.wadetrim.com
Certificate of Authorization No.: 3952

CITY OF TAMPA, FLORIDA
GRECO PUMP STATION
REHABILITATION

PM1 ENCLOSURE DETAIL

ISSUED FOR: DATE: BY:
90% PLANS 7-16-18 RGB
100% PLANS 11-20-18 RGB

JOB NO.: TPA2007-01M
SHEET: E21

© Wade Trim Group, Inc.

Greco PS Rehabilitation