B_____-_____

CITY of TAMPA

LOCATION MAP

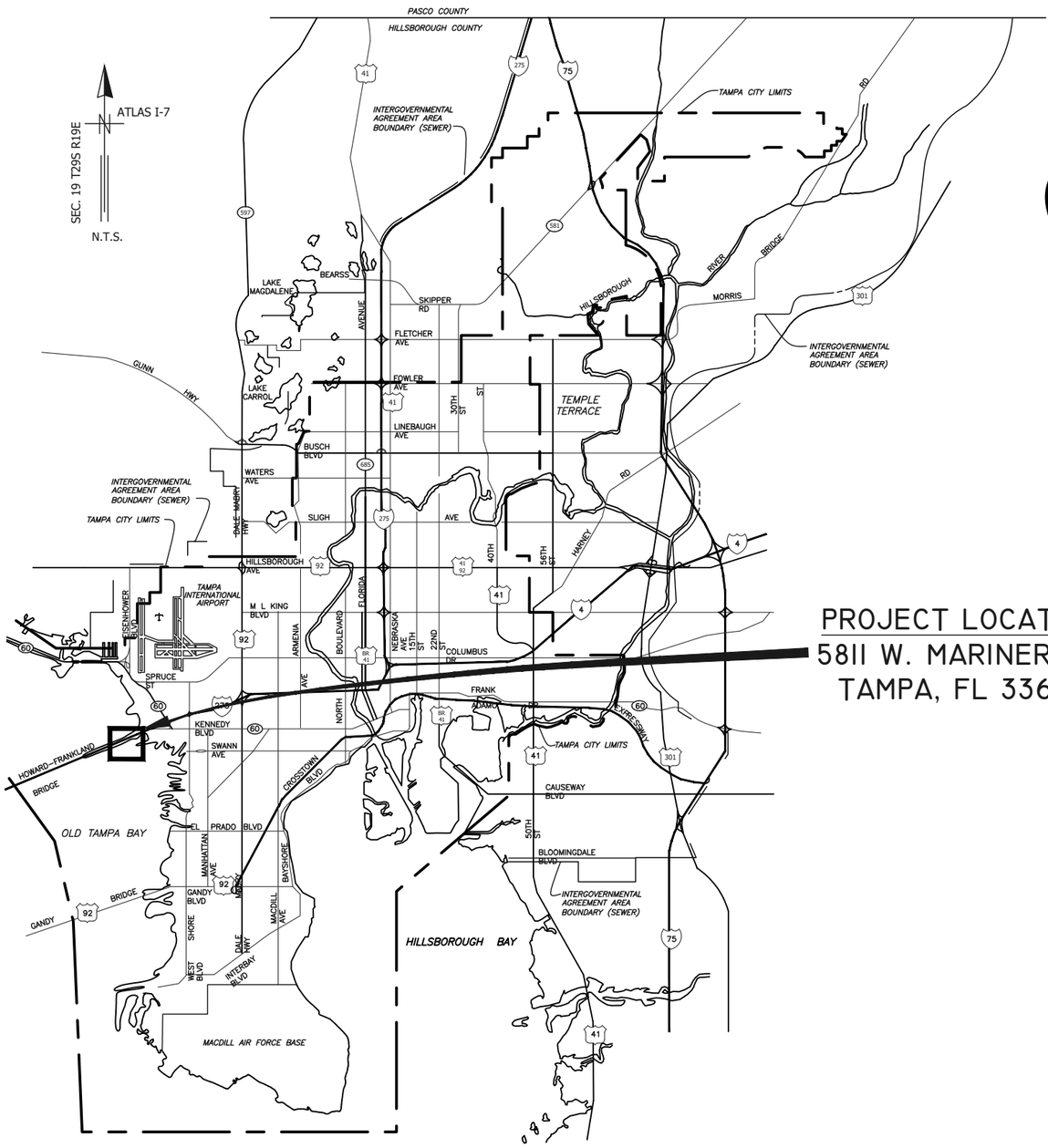

PROJECT LOCATION
5811 W. MARINER ST.
TAMPA, FL 33609

WASTEWATER DEPARTMENT

PLANS FOR

MARINER STREET PUMP STATION REHABILITATION

CONTRACT No.
19-C-00007

NOTE:
ATTENTION IS DIRECTED TO THE FACT THAT THESE PLANS MAY HAVE BEEN REDUCED IN SIZE BY REPRODUCTION. THIS MUST BE CONSIDERED WHEN OBTAINING SCALED DATA.

No.	DATE	REVISIONS
3		
2		
1		

JACINTO CARLOS FERRAS, P.E. #49454
DESIGN DIVISION HEAD
WASTEWATER DEPARTMENT

DES: KJG
DRN: KLT
CKD:
DATE: Jun-2019

CITY of TAMPA
WASTEWATER DEPARTMENT

MARINER STREET PUMP STATION REHABILITATION

COVER SHEET

SHEET 1

User: ssry Drawing Name: \\sewer\SewerShare\WasteWater Projects\Mariner, Greco and Joes Place Pump Station Rehabilitation\Drafting\DWG\Mariner PS Rehabilitation.dwg
Layout- Jun 06, 2019 - 11:20am

LEGEND

EX SEWERS	UP to 36" & SMALLER	36" & LARGER
EX FORCE MAIN		
EX SAN SEWER & MANHOLES		
EX STORM SEWER & MANHOLES		
PROP SEWERS		
PROP FORCE MAIN		
PROP SANITARY SEWER & MANHOLES		
PROP STORM SEWER & MANHOLES		

OTHER FEATURES

RIGHT of WAY LINE (R/W)
EDGE of PAVEMENT
WATER LINE
GAS LINE
ELECTRICAL CABLE or DUCT
TELEPHONE CABLE or DUCT
TV CABLE
VALVE, AIR RELEASE VALVE
HYDRANT
CATCH BASIN, GRATE
POWER POLE
TELEPHONE POLE
GUY POLE
GUY WIRE
VALVE VAULT (V)
WATER METER (M)
ELECTRICAL MANHOLE or VAULT (E)
TELEPHONE MANHOLE or VAULT (T)
TRAFFIC BOX or VAULT (TR)
BUILDING LIMIT (1236)
PROPERTY OWNERSHIP
FENCE
CONIFER (6")
PALM (8")
OAK (10")
OTHER (12")
SHRUB
HEDGE
RAILROAD TRACKS
IRON PIPE
CONTROL POINT
CONCRETE MONUMENT
OPEN DITCHES
EXISTING WYE
PROPOSED WYE
CLEAN OUT

ABBREVIATIONS

AIR RELEASE VALVE	ARV	INVERT ELEVATION	IE or INV EL
APPROXIMATE LOCATION	AL	MAINTENANCE OF TRAFFIC	MOT
BENCH MARK	BM	MANHOLE	MH or MH
BURIED TELEPHONE	BT	PLUG VALVE	PV
CONCRETE PIPE	CP	POINT of INTERSECTION	PI
DIAMETER RATIO	DR	POLYVINYL CHLORIDE PIPE	PVCP
DUCTILE IRON PIPE	DIP	REINFORCED CONCRETE PIPE	RCP
DRIVEWAY	D/W	RESTRAINED MECHANICAL JOINT	RMJ
EDGE OF PAVEMENT	EOP	RIGHT of WAY	R/W
FIBER OPTIC CABLE	FOC	TOP of PIPE	TOP
FLORIDA DEPT. OF TRANSPORTATION	FDOT	VERIFIED VERT. AND HORZ. LOCATION	Vvh
FORCE MAIN	FM	VITRIFIED CLAY PIPE	VCP
HIGH DENSITY POLYETHYLENE PIPE	HDPE	WASTEWATER	WW

B_____ _____

INDEX

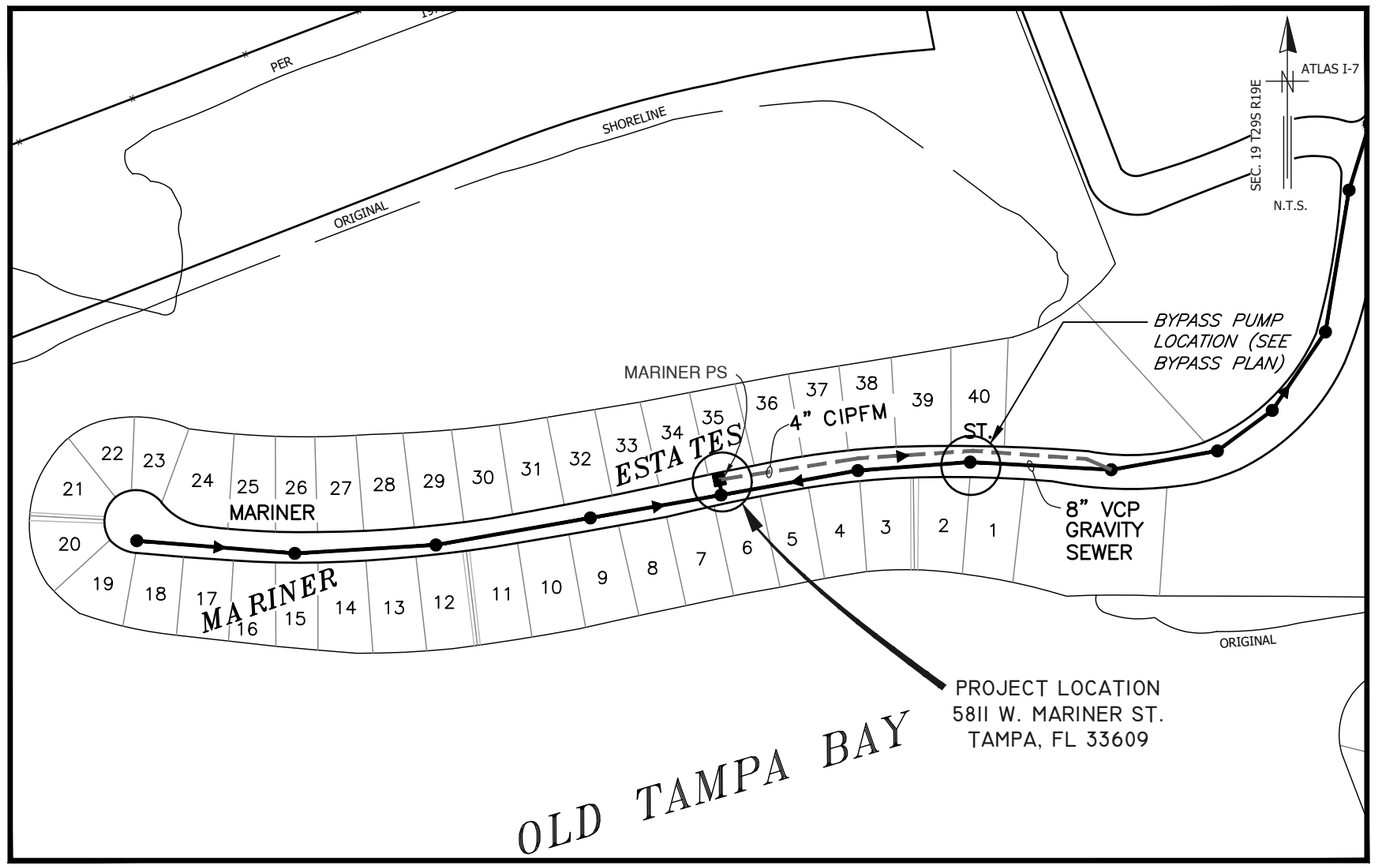

PROJECT LOCATION MAP

N.T.S.

No.	DATE	REVISIONS
3		
2		
1		

JACINTO CARLOS FERRAS, P.E. #49454 DESIGN
DIVISION HEAD
WASTEWATER DEPARTMENT

DES: KJG
DRN: KLT
CKD:
DATE: Jun-2019

CITY of TAMPA
WASTEWATER DEPARTMENT

MARINER STREET PUMP STATION REHABILITATION

LEGEND, LOCATION MAP AND INDEX

SHEET 2

B___-___

DEMOLITION NOTES

D-1. SALVAGEABLE MATERIAL, AS DETERMINED BY DEPARTMENT PERSONNEL, SHALL BE DELIVERED TO THE PARTS WAREHOUSE LOCATED ON THE TREATMENT PLANT SITE. NON-SALVAGEABLE MATERIALS ARE TO BE REMOVED FROM THE SITE AND PROPERLY DISPOSED OF AT THE CONTRACTORS EXPENSE.

D-2. THE CONSTRUCTION SITE SHALL BE MAINTAINED IN AS NEAT AND ORDERLY CONDITION AS POSSIBLE DURING CONSTRUCTION OPERATIONS. SITE SHALL BE SECURED WITH TEMPORARY FENCING AND STRUCTURES DURING HOURS WHEN CONTRACTOR IS NOT PRESENT TO ENSURE SAFETY OF CITY EMPLOYEES AND THE PUBLIC.

D-3. CONTRACTOR SHALL RESTORE ALL LANDSCAPING, SODDING, SPRINKLER SYSTEM PIPING, BRICK PAVERS, AND PAVEMENT THAT MAY HAVE BEEN DAMAGED DURING CONSTRUCTION TO ITS ORIGINAL CONDITION OR BETTER.

GENERAL NOTES

G-1. CONTRACTOR SHALL COORDINATE ALL CONSTRUCTION ACTIVITIES WITH WASTEWATER INSPECTOR, WASTEWATER PERSONNEL AND PUMPING STATION OPERATIONS AFTER ISSUANCE OF THE NOTICE TO PROCEED (NTP).

G-2. CONTRACTOR IS RESPONSIBLE FOR OBTAINING ALL NECESSARY RIGHT-OF-WAY PERMITS FOR THE PUMPING STATION WORK.

G-3. THE CITY WILL OBTAIN ALL NECESSARY FDEP WASTEWATER PERMITS.

G-4. CONTRACTOR SHALL CALL SUNSHINE (1-800-432-4770) AT LEAST 48 HOURS PRIOR TO ANY CONSTRUCTION ACTIVITY.

G-5. NORMAL WORKING HOURS SHALL BE WEEKDAYS FROM 7:30 AM TO 4:00 PM UNLESS OTHERWISE APPROVED BY THE ENGINEER.

G-6. AFTER WET WELL IS DEWATERED, THE CONTRACTOR SHALL CLEAN WET WELL OF ALL DEBRIS. DEBRIS MAY BE DELIVERED AND DISPOSED OF AT THE CITY OF TAMPA HOWARD F. CURREN AWTP, 2700 MARITIME BOULEVARD.

G-7. CONTRACTOR SHALL VERIFY QUANTITIES OF ALL NECESSARY PIPES, REDUCERS, FITTINGS, SUPPORTS, AND ANY MISCELLANEOUS BRACKETS.

G-8. DIMENSIONS SHOWN ARE NOT NECESSARILY ACCURATE TO THE DEGREE REQUIRED FOR FABRICATION. EXISTING DIMENSIONS AND VIEWS ARE SHOWN BASED ON THE BEST INFORMATION AVAILABLE. CONTRACTOR SHALL FIELD VERIFY ALL PERTINENT DIMENSIONS AND REFLECT THEM ON DETAILED SHOP DRAWINGS FOR APPROVAL BEFORE ANY FABRICATION.

G-9. TWO NEW PUMPS SHALL BE SUPPLIED FOR THIS PROJECT. PROPOSED PUMPS ARE FLYGT, MODEL NP-3085-463, 3-INCH, 3 HP WITH 135mm IMPELLERS. ONE PUMP SHALL BE SUPPLIED WITH A FLYGT MIX-FLUSH VALVE. ALL PROPOSED PUMP BASES SHALL HAVE 4-INCH DIAMETER DISCHARGE ELBOWS. PUMPS SHALL BE RATED FOR 100 GPM AT 22 FT TDH. THIS EQUIPMENT IS A STANDARDIZED ITEM AT THIS FACILITY AND NO "OR EQUAL" SUBMITTALS WILL BE CONSIDERED.

G-10. SHOP DRAWINGS SHALL BE SUBMITTED AND APPROVED BY THE CITY FOR ALL PROPOSED ITEMS. ALL SUBMITTALS AND SHOP DRAWINGS SHALL BE ORIGINALS OR HIGH QUALITY COPIES (CLEARLY LEGIBLE). NO FAXED SHEETS OR POOR QUALITY COPIES WILL BE ACCEPTED FOR SUBMITTAL REVIEW.

G-11. PUMP DISCHARGE PIPING IN WET WELL SHALL BE 4-INCH DIAMETER HDPE, SDR-11, GREEN STRIPE, DIPS-OD. HDPE JOINTS SHALL BE FLANGED WITH 316 SS BACK UP RINGS.

G-12. PLUG VALVES SHALL BE DEZURIK, PEF 100% PORT, ECCENTRIC PLUG VALVES OR APPROVED EQUAL. PLUG VALVES SHALL BE PROVIDED WITH 2" NUTS AND NO HANDWHEELS.

G-13. CHECK VALVES SHALL BE APCO RUBBER FLAPPER 4-INCH SWING CHECK VALVES, SERIES 100, MODEL 104P3. THIS EQUIPMENT IS A STANDARDIZED ITEM AT THIS FACILITY AND NO "OR EQUAL" SUBMITTALS WILL BE CONSIDERED.

G-14. ALL HARDWARE, UNLESS OTHERWISE NOTED, SHALL BE TYPE 316 STAINLESS STEEL.

G-15. PIPE SUPPORTS SHALL BE CONSTRUCTED AS SHOWN IN THE PIPE SUPPORT DETAIL (SEE SHEET 11).

G-16. ALL CEMENTITIOUS CONCRETE AND GROUT, UNLESS OTHERWISE NOTED, SHALL BE CLASS "B", 4,000 PSI COMPRESSIVE STRENGTH AT 28 DAYS. ALL REINFORCING STEEL SHALL BE GRADE 60.

G-17. OSHA STANDARD SAFETY EQUIPMENT SUCH AS SAFETY HARNESSES, GAS MONITORS, LOWER EXPLOSIVE LIMIT (LEL) DETECTORS, BREATHING APPARATUS, ETC. SHALL BE UTILIZED WHERE THE WORK DICTATES THEIR USE.

G-18. ALL WORK SHALL BE PERFORMED IN ACCORDANCE WITH FLORIDA BUILDING CODE 6TH EDITION 2017, CHAPTER 5 OF THE CITY OF TAMPA CODE AND NATIONAL ELECTRIC CODE 2014 EDITION.

G-19. ALL METAL PIPE, FITTINGS, VALVES, ETC. SHALL RECEIVE:
1. SHOP COAT - ONE COAT, 4-6 MILS (DRY) TNEMEC N140-1211 EPOXY PRIMER.
2. FIELD COAT - ONE COAT, 5-7 MILS (DRY) TNEMEC SERIES 446 PERMA-SHIELD MCU.
3.. FIELD COAT
   A. BELOW GRADE - ONE COAT, 5-7 MILS (DRY) TNEMEC SERIES 446 PERMA-SHIELD MCU.

G-20. CONTRACTOR TO SUBMIT METHOD FOR 100% WATERTIGHT SEALING AT PIPE PENETRATIONS THROUGH STRUCTURES. PROPOSED LINK SEAL OR APPROVED EQUAL.

G-21. CONTRACTOR SHALL PROVIDE A REDUCED PRESSURE BACKFLOW-PREVENTION DEVICE IN WATER SERVICE LINE, AS SHOWN IN DETAILS, AT A PLACE TO BE SPECIFIED DURING CONSTRUCTION. BACKFLOW PREVENTION DEVICE SHALL BE 1" WILKINS, MODEL #975 XL, OR EQUAL.

G-22. ALL DIP PIPE AND FITTINGS SHALL BE CLASS 53 WITH PROTECTO 401 INTERIOR COATING.

G-23. ALUMINUM ACCESS COVERS SHALL BE DESIGNED FOR H20 LOADING WITH 316 STAINLESS STEEL HARDWARE, HINGES AND AUTOMATIC HOLD-OPEN ARM AS MANUFACTURED BY US FOUNDRY, FLYGT, HALLIDAY PRODUCTS, OR APPROVED EQUAL. THE PUMP ACCESS COVER SHALL BE A SINGLE DOOR ARRANGEMENT WITH AN ANGLE FRAME FOR AN OVERALL OPENING OF 36"x36". THE ACCESS DOORS SHALL ALSO BE EQUIPPED WITH A FLUSH LIFTING HANDLE, TAMPERPROOF FASTENERS AND RECESS LOCKING BOX.

G-24. THE ACCESS COVER SHALL CLOSE FLUSH WITH THE FRAME. ALL ALUMINUM SURFACES THAT CONTACT CONCRETE SHALL BE COATED WITH TWO COATS OF COAL TAR EPOXY OR BITUMINOUS COATING OR EQUAL. THE CONTRACTOR SHALL SUBMIT SHOP DRAWINGS DETAILING THE INSTALLATION AND CONFIGURATION OF THE ACCESS COVERS.

G-25. ALL ELEVATIONS ARE BASED ON NAVD88 DATUM.

BYPASS PUMPING NOTES

B-1. SEWER SERVICE TO CUSTOMERS SHALL NOT BE DISRUPTED DURING CONSTRUCTION. CONTRACTOR SHALL SUBMIT DETAILED PROPOSAL FOR BYPASS PUMPING STRATEGY.

B-2. CONTRACTOR SHALL SUPPLY (1) SOUND ATTENUATED BYPASS PUMP, BYPASS PUMP SHALL BE CAPABLE OF DELIVERING 100 GPM AT 22 FT TDH PLUS ANY LOSSES IN THE TEMPORARY BYPASS PIPING. THE BYPASS PUMP SHALL BE OF THE SELF PRIMING QUIET FLOW TYPE PUMP.

B-3. BYPASS PUMP NOISE SHALL STRICTLY COMPLY TO ALL LOCAL REGULATIONS AND ORDINANCES COVERING NOISE CONTROL.

B-4. IN ORDER TO MINIMIZE BYPASS PUMPING DURATION, CONTRACTOR SHALL HAVE ALL PROPOSED MATERIALS AND EQUIPMENT ON-SITE BEFORE PLACING PUMPING STATION ON BYPASS.

B-5. CONTRACTOR SHALL PROVIDE BARRICADES WITH FLASHING LIGHTS AROUND MANHOLE AND BYPASS PUMP. PUMP SHALL BE SITUATED TO ALLOW ONE (1) OPEN TRAFFIC LANE OF TRAFFIC INCLUDING SOLID WASTE COLLECTION VEHICLES.

B____–____

ATLAS I-7

SEC. 19 T29S R19E

N.T.S.

AERIAL

N.T.S.

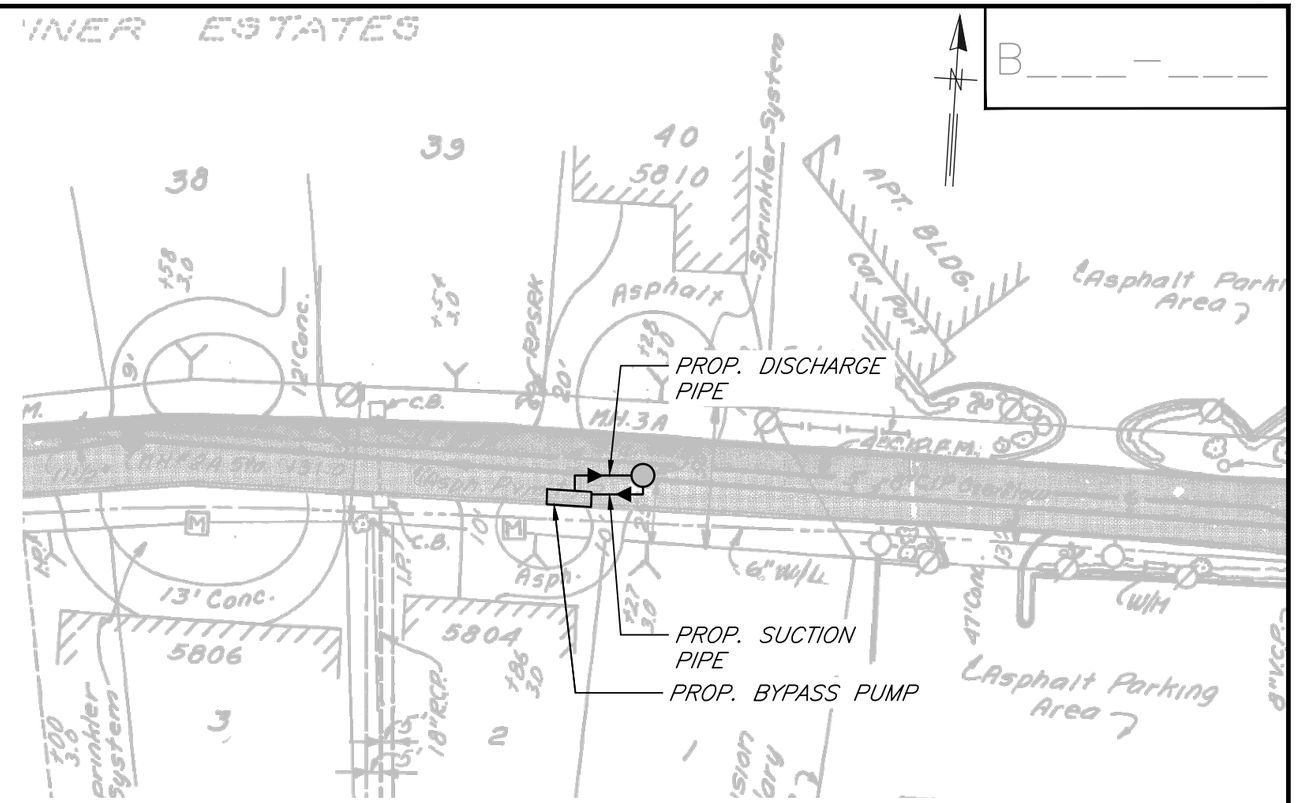

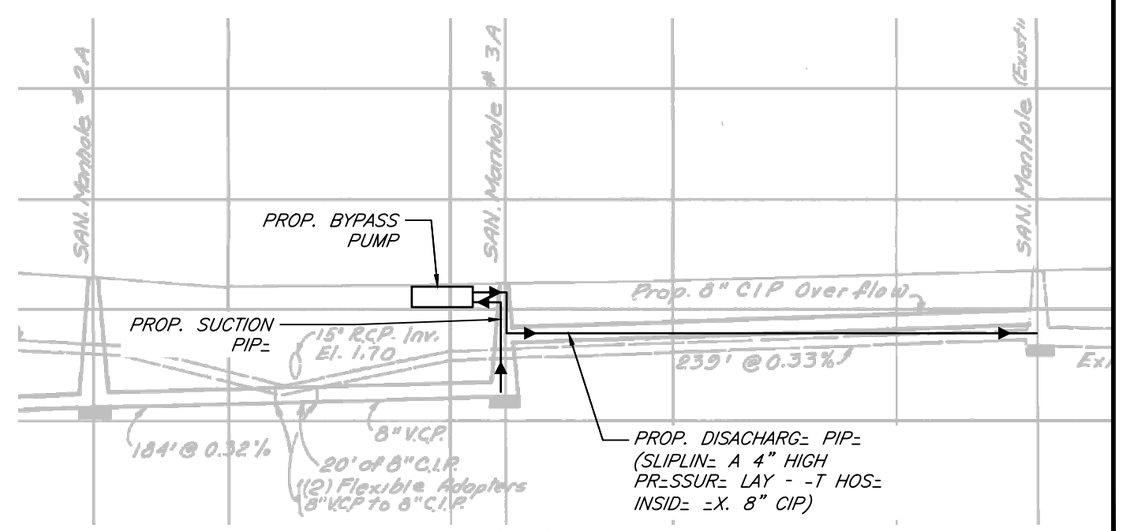

BYPASS DETAIL

N.T.S.

	No.	DATE	REVISIONS
JACINTO CARLOS FERRAS, P.E. #49454 DESIGN DIVISION HEAD WASTEWATER DEPARTMENT	3		
	2		
	1		

DES: KJG
DRN: KLT
CKD:
DATE: Jun-2019

CITY of TAMPA
WASTEWATER DEPARTMENT

MARINER STREET PUMP STATION REHABILITATION

BYPASS PLAN

SHEET 4

NOTE:
CONTRACTOR SHALL MAINTAIN RESIDENTIAL ACCESS TO GARAGE AS LONG AS POSSIBLE. DURATION WITH NO GARAGE ACCESS FOR CURB AND GUTTER REPLACEMENT AND FORCE MAIN CONNECTION SHOULD BE MINIMIZED.

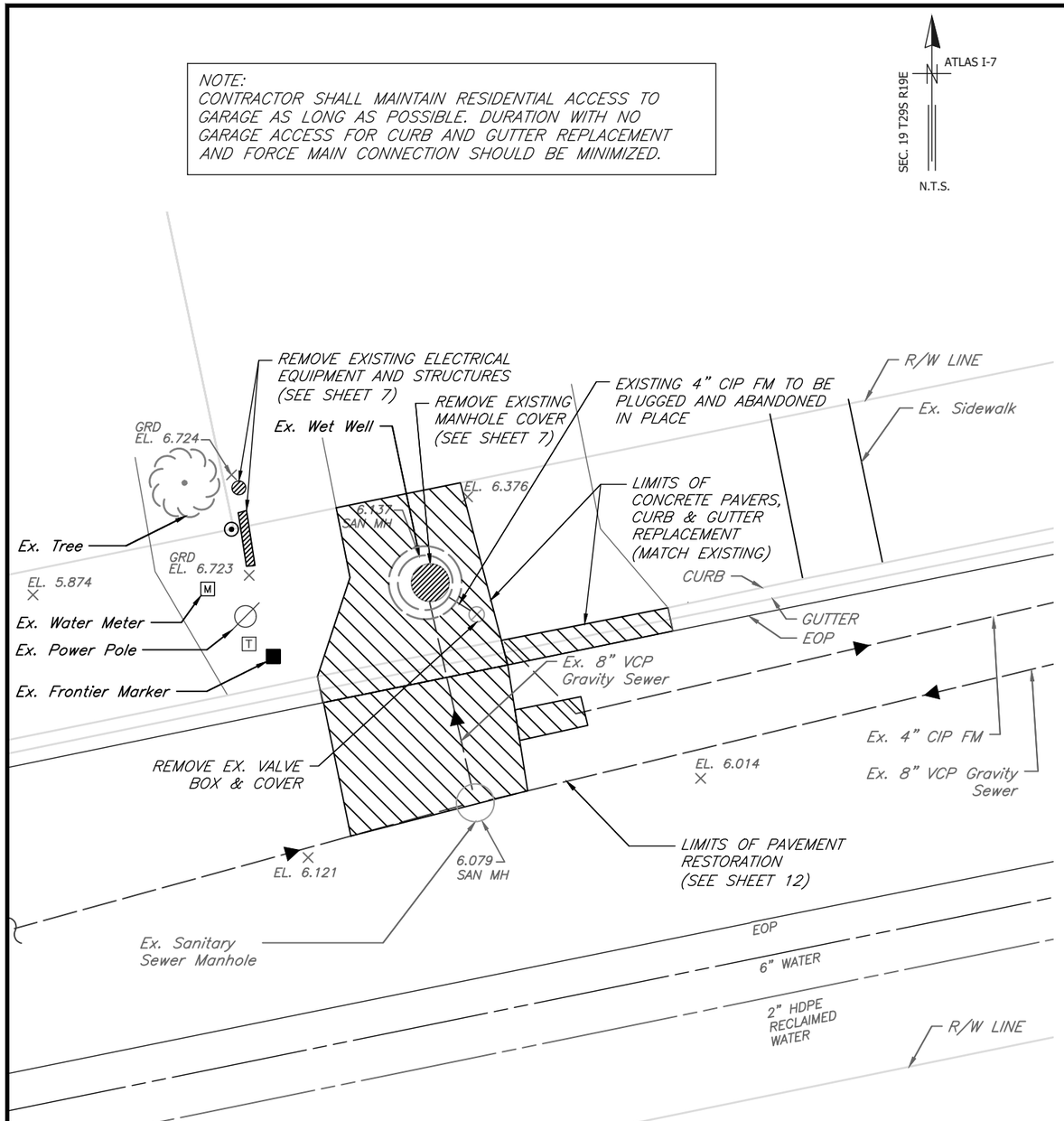

EXISTING SITE PLAN

SCALE: 1" = 10'

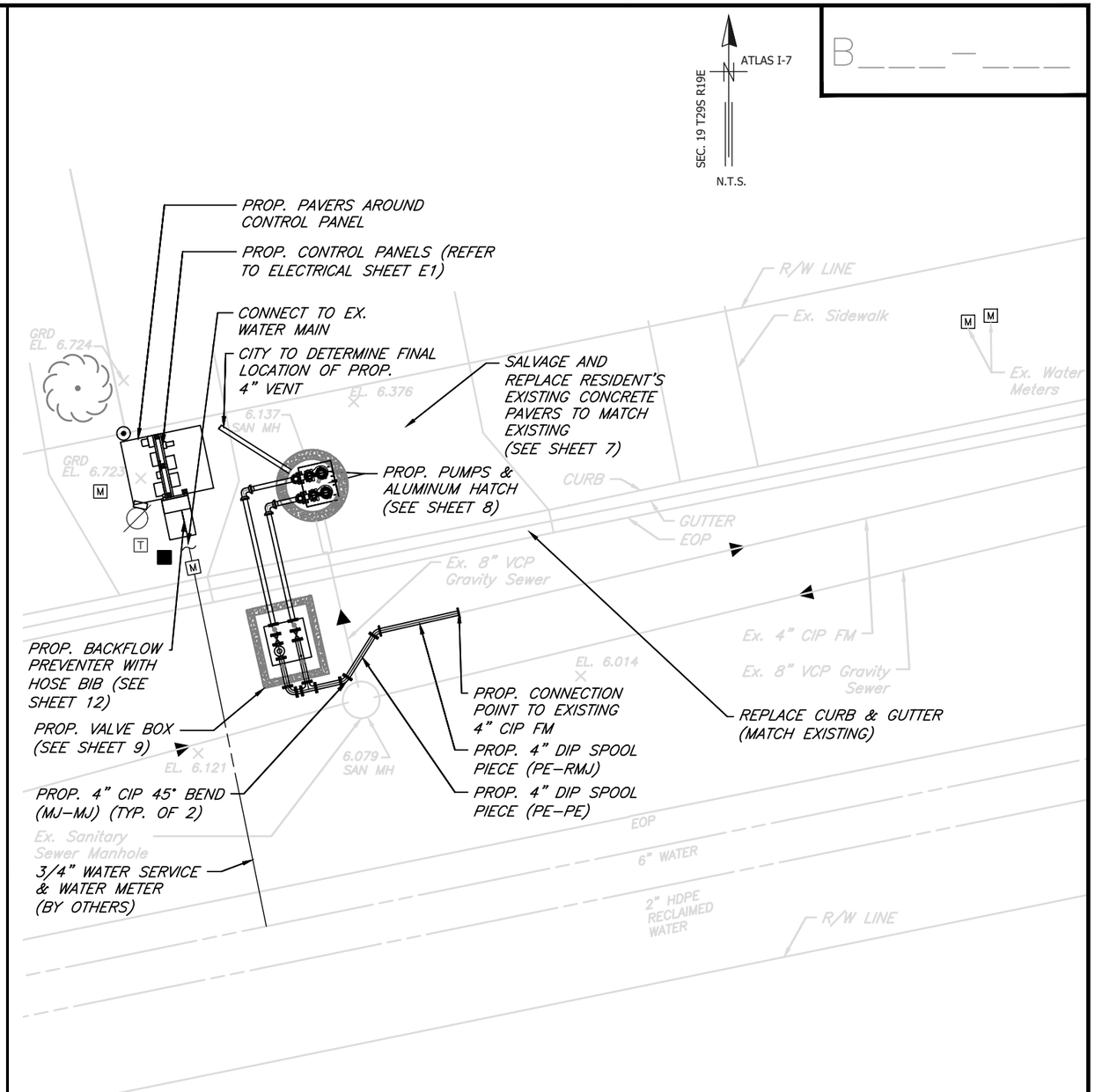

PROPOSED SITE PLAN

SCALE: 1" = 10'

B____-____

No.	DATE	REVISIONS
3		
2		
1		

JACINTO CARLOS FERRAS, P.E. #49454 DESIGN
DIVISION HEAD
WASTEWATER DEPARTMENT

DES: KJG
DRN: KLT
CKD:
DATE: Jun-2019

CITY of TAMPA
WASTEWATER DEPARTMENT

MARINER STREET PUMP STATION REHABILITATION

EXISTING AND PROPOSED SITE PLANS

SHEET 5

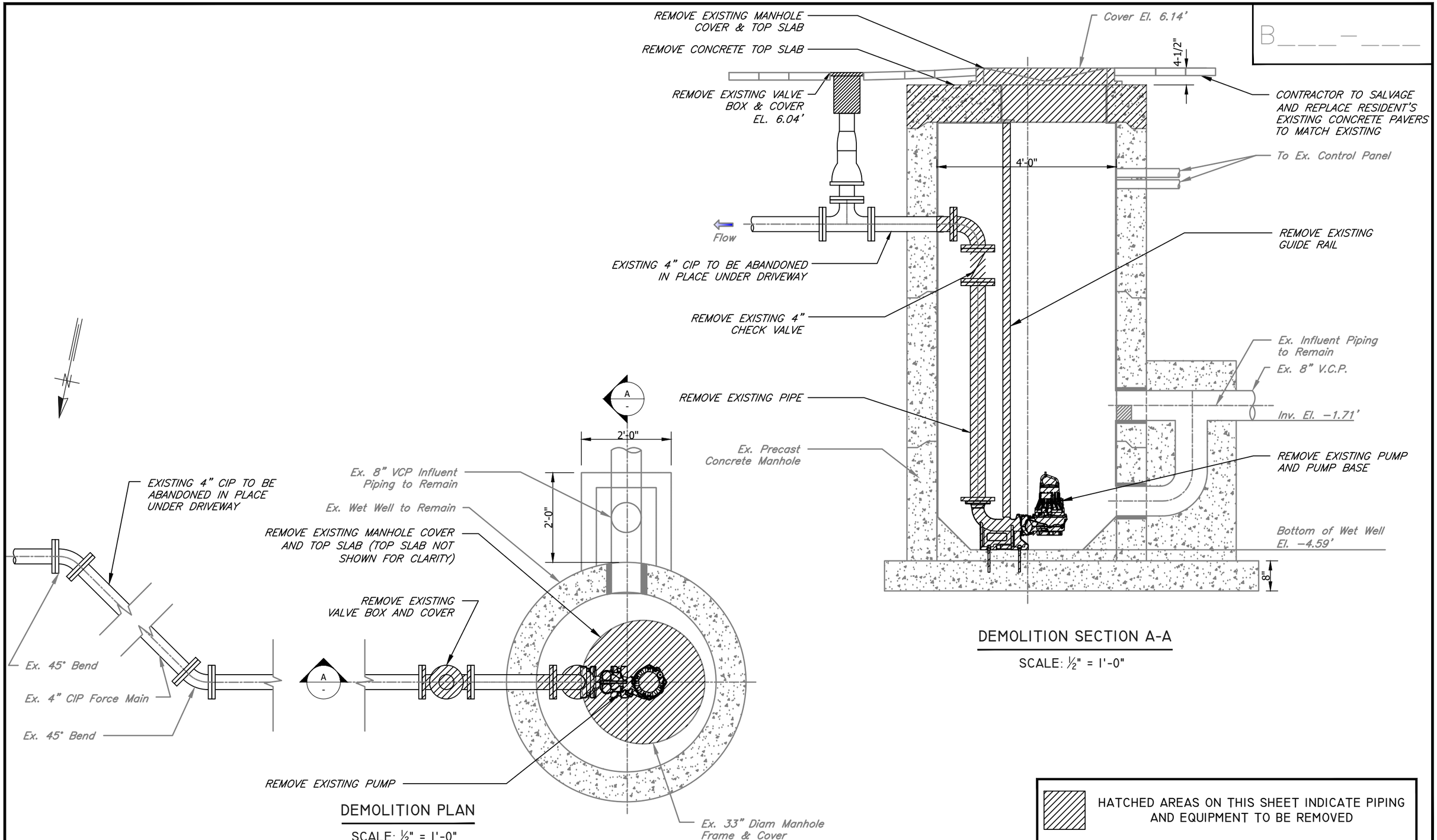

DEMOLITION SECTION A-A

SCALE: ½" = 1'-0"

DEMOLITION PLAN

SCALE: ½" = 1'-0"

HATCHED AREAS ON THIS SHEET INDICATE PIPING AND EQUIPMENT TO BE REMOVED

JACINTO CARLOS FERRAS, P.E. #49454 DESIGN DIVISION HEAD WASTEWATER DEPARTMENT	No.	DATE	REVISIONS	DES: KJG DRN: KLT CKD: DATE: Jun-2019	CITY of TAMPA WASTEWATER DEPARTMENT	MARINER STREET PUMP STATION REHABILITATION DEMOLITION PLAN & SECTION VIEW
	3					SHEET 6
	2					
	1					

User: ssry Drawing Name: \\sewer\SewerShare\WasteWater Projects\Mariner, Greco and Joes Place Pump Station Rehabilitation\Drafting\DWG\Mariner PS Rehabilitation.dwg
Layout- Jun 06, 2019 - 11:20am

B____-____

EXISTING CONTROL PANEL

N.T.S.

EXISTING DRIVEWAY

N.T.S.

HATCHED AREAS ON THIS SHEET INDICATE PIPING AND EQUIPMENT TO BE REMOVED

No.	DATE	REVISIONS
3		
2		
1		

JACINTO CARLOS FERRAS, P.E. #49454 DESIGN DIVISION HEAD
WASTEWATER DEPARTMENT

DES: KJG
DRN: KLT
CKD:
DATE: Jun-2019

CITY of TAMPA
WASTEWATER DEPARTMENT

MARINER STREET PUMP STATION REHABILITATION

DEMOLITION DETAILS

SHEET 7

PUMP DATA
FLYGT MODEL NP3085-463, WITH 135MM IMPELLER, 3 HP, 240V, 3 PH, 100 GPM @ 22 FT TDH

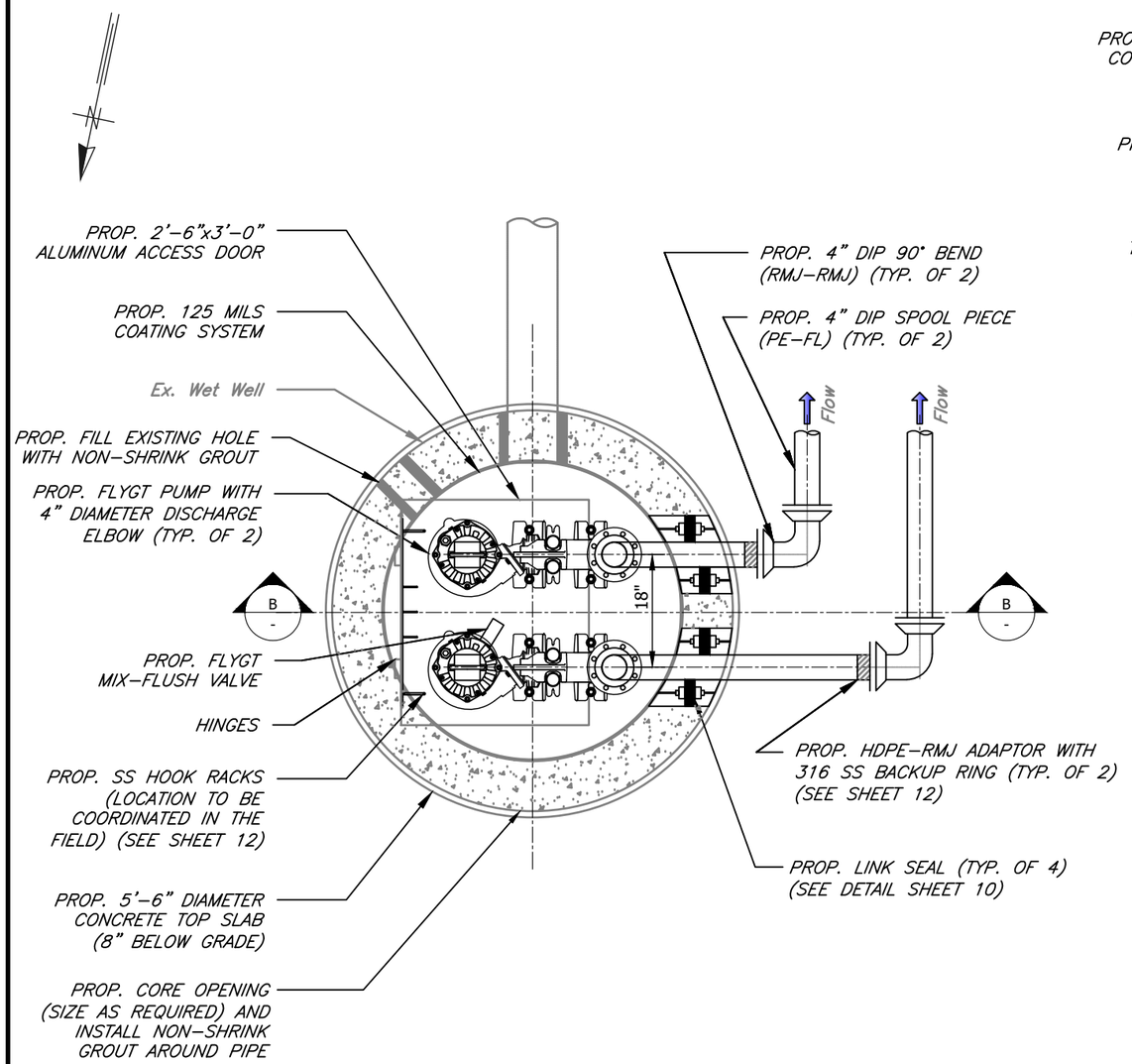

PROPOSED WET WELL PLAN

SCALE: ½" = 1'-0"

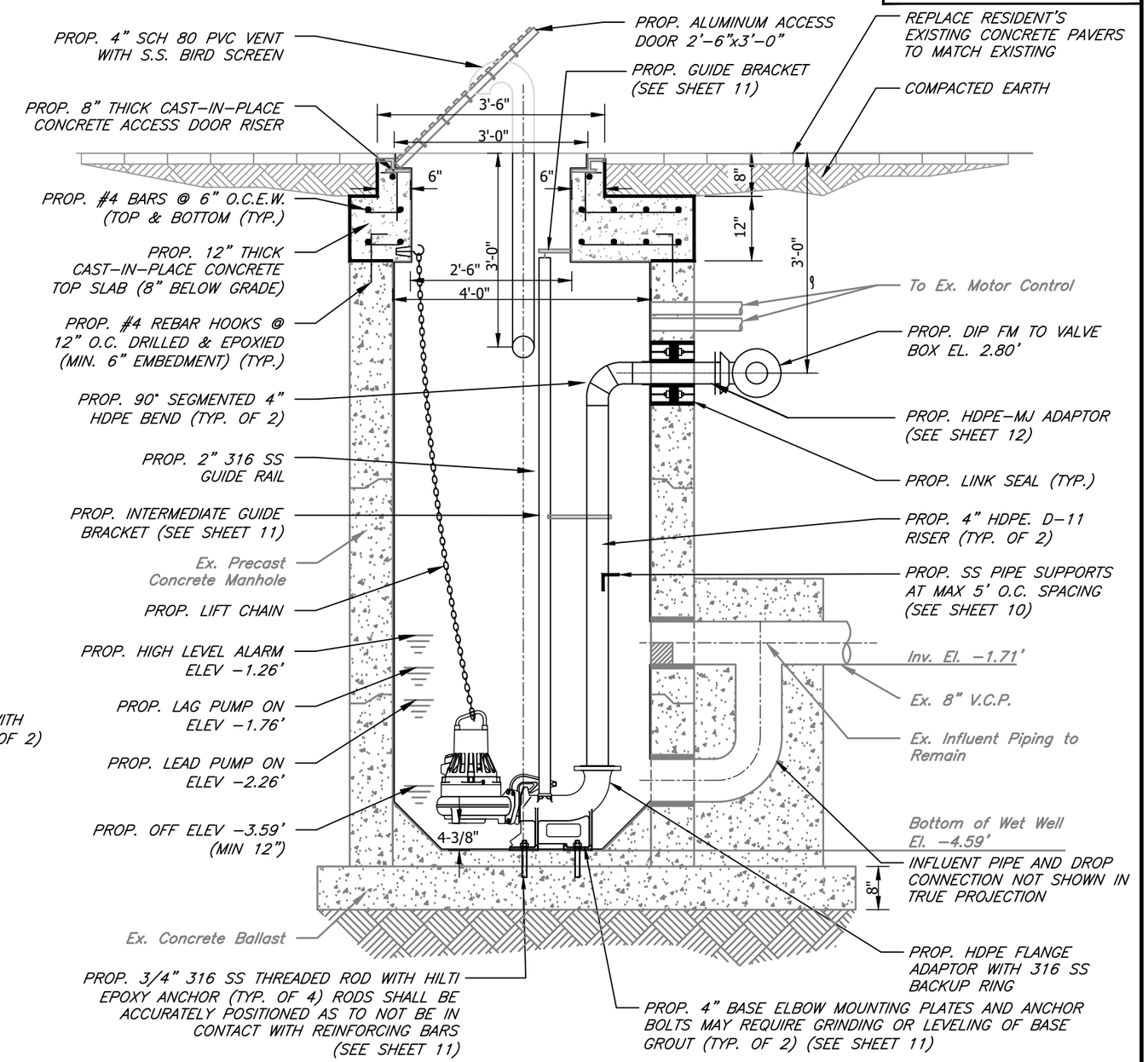

PROPOSED SECTION B-B

SCALE: ½" = 1'-0"

No.	DATE	REVISIONS
3		
2		
1		

JACINTO CARLOS FERRAS, P.E. #49454 DESIGN DIVISION HEAD
WASTEWATER DEPARTMENT

DES: KJG
DRN: KLT
CKD:
DATE: Jun-2019

CITY of TAMPA
WASTEWATER DEPARTMENT

MARINER STREET PUMP STATION REHABILITATION

PROPOSED WET WELL PLAN & SECTION VIEW

SHEET 8

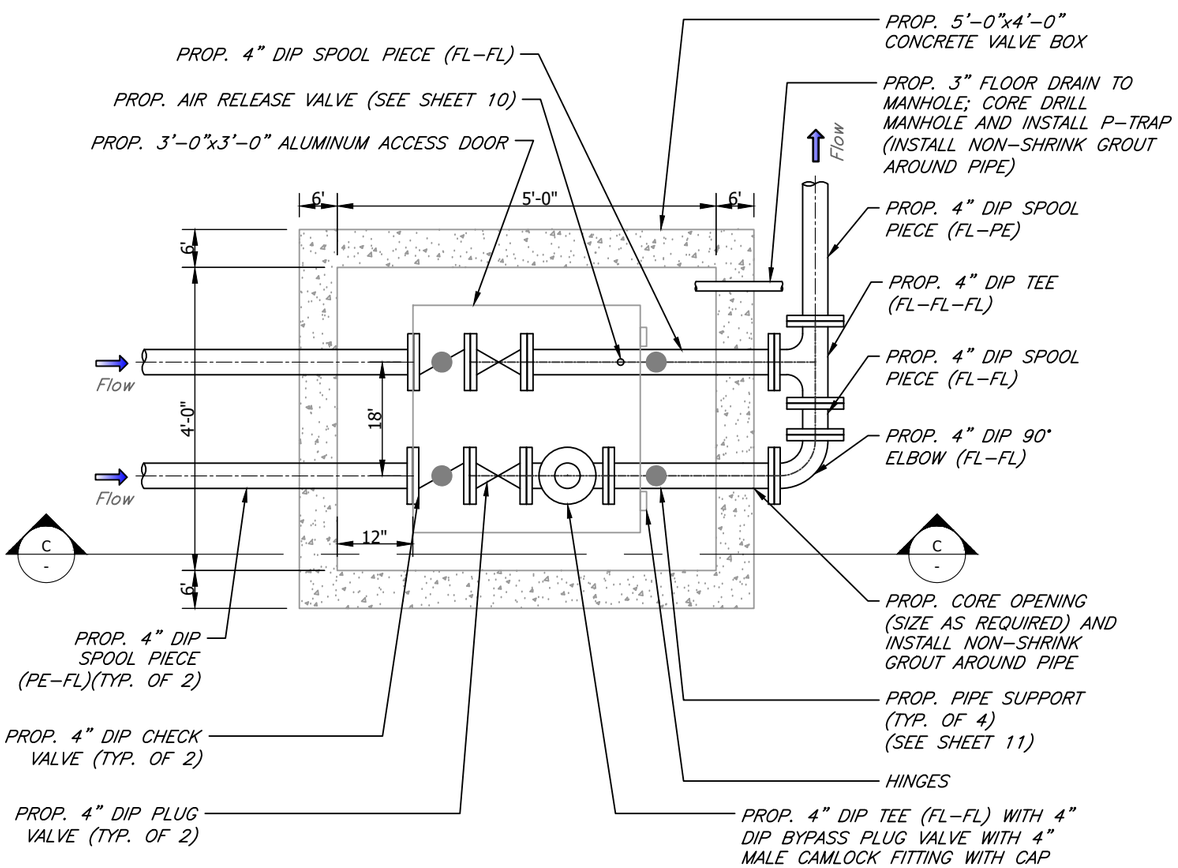

PROPOSED VALVE BOX PLAN

SCALE: ½" = 1'-0"

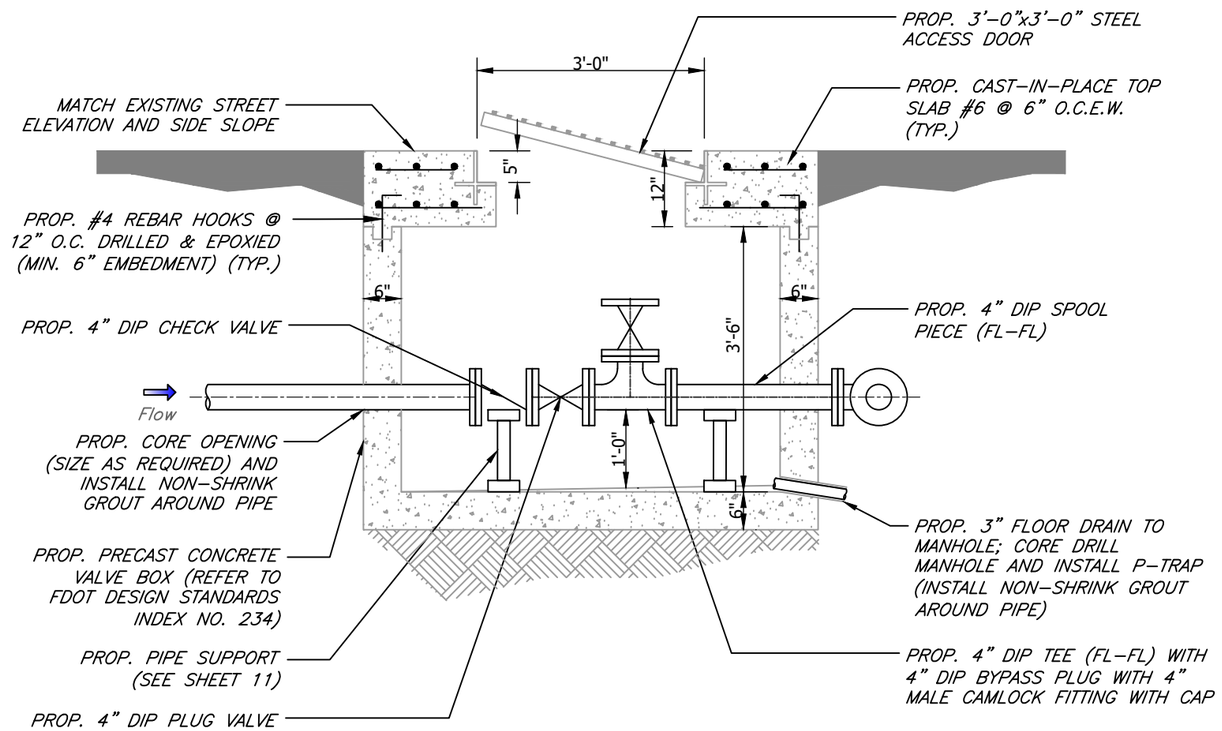

PROPOSED SECTION C-C

SCALE: ½" = 1'-0"

B____-____

User: ssry Drawing Name: \\sewer\SewerShare\WasteWater Projects\Mariner, Greco and Joes Place Pump Station Rehabilitation\Drafting\DWG\Mariner PS Rehabilitation.dwg
Layout- Jun 06, 2019 - 1:20pm

JACINTO CARLOS FERRAS, P.E. #49454 DESIGN DIVISION HEAD
WASTEWATER DEPARTMENT

No.	DATE	REVISIONS
3		
2		
1		

DES: KJG
DRN: KLT
CKD:
DATE: Jun-2019

CITY of TAMPA
WASTEWATER DEPARTMENT

MARINER STREET PUMP STATION REHABILITATION

PROPOSED VALVE BOX PLAN & SECTION VIEW

SHEET 9

B___-___

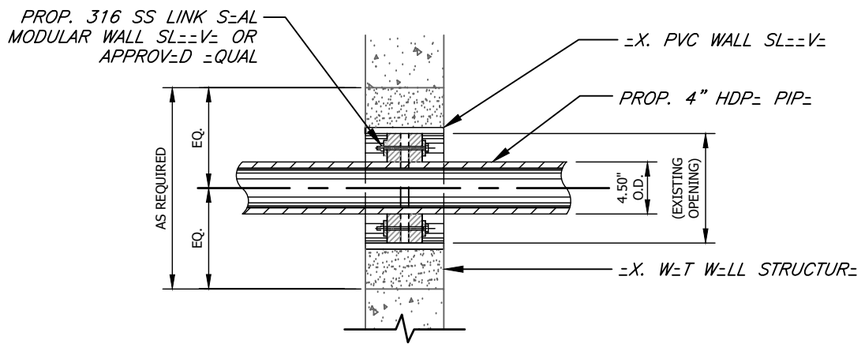

LINK SEAL

N.T.S.

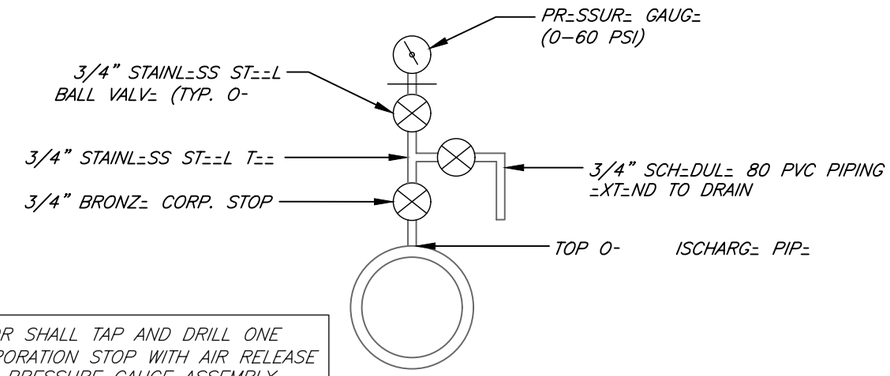

TRACTOR SHALL TAP AND DRILL ONE 3/4" CORPORATION STOP WITH AIR RELEASE VALVE AND PRESSURE GAUGE ASSEMBLY. PVC PIPE AND FITTINGS (SCH 80) SHALL BE PROVIDED TO DIRECT FLOW FROM THE BALL VALVE DOWNWARD TO THE FLOOR.

AIR RELEASE AND PRESSURE GAUGE

N.T.S.

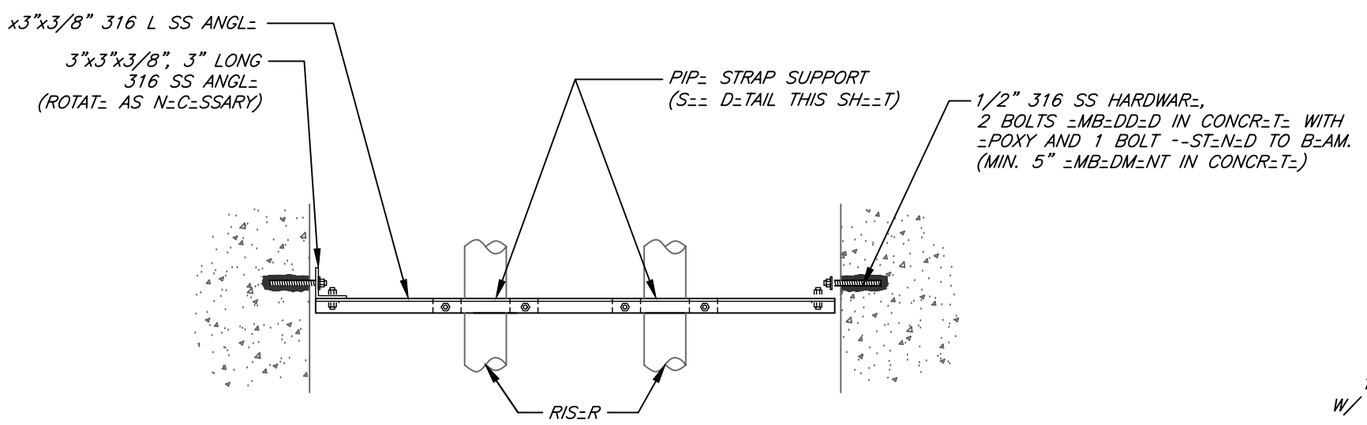

PIPE SUPPORT ASSEMBLY

N.T.S.

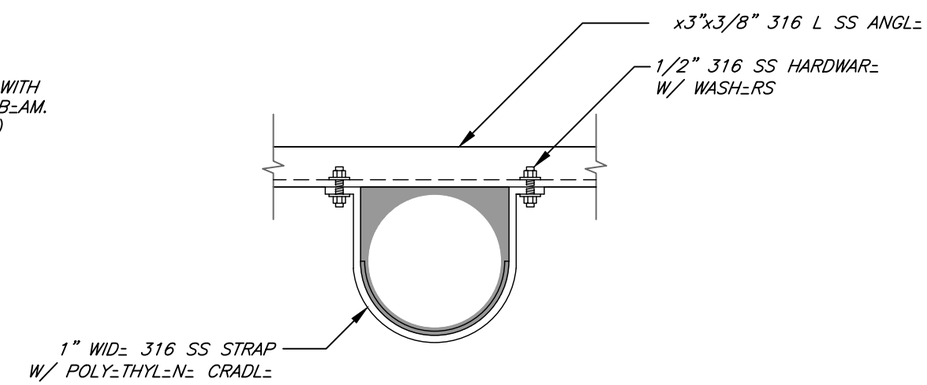

PIPE STRAP SUPPORT

N.T.S.

No.	DATE	REVISIONS
3		
2		
1		

JACINTO CARLOS FERRAS, P.E. #49454 DESIGN
DIVISION HEAD
WASTEWATER DEPARTMENT

DES: KJG
DRN: KLT
CKD:
DATE: Jun-2019

CITY of TAMPA
WASTEWATER DEPARTMENT

MARINER STREET PUMP STATION REHABILITATION

DETAILS (1 OF 3)

SHEET 10

PUMP BASE ELL MOUNTING PLATE DIMENSIONS					
A	B	C	D	E	F
20"	16"	8"	4"	9-7/8"	1/2"

NOTES:
1. INSTALL DOUBLE NUTS ON ALL EIGHT (8) THREADED RODS.
2. THE PLATE EDGES AND ALL HOLES SHALL BE GROUND SMOOTH TO REMOVE ALL BURRS.
3. DIMENSIONS FOR "C" & "E" ARE FOR FLYGT PUMPS, INC. BASE ELLS.

B____-____

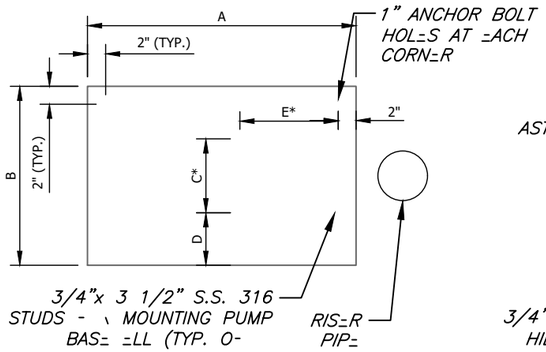

PLAN

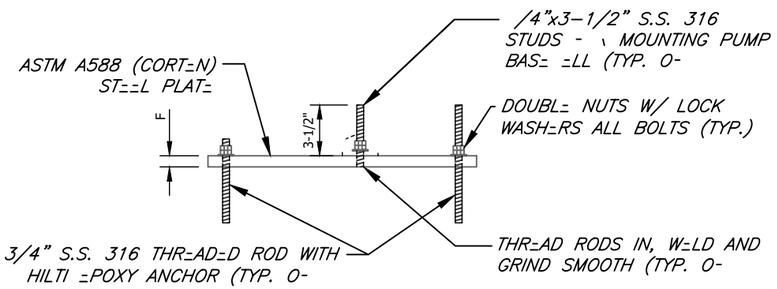

PROFILE

PUMP BASE ELL MOUNTING PLATE

N.T.S.

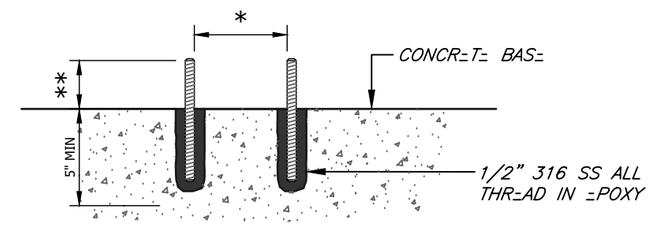

* ALIGNMENT OF ANCHOR BOLTS SHALL BE AS RECOMMENDED BY PUMP MANUFACTURER.

** CONTRACTOR SHALL PROVIDE A MINIMUM 1/2 INCH BOLT PROTRUSION ABOVE THE FINAL NUT LOCATION AFTER THE NUT IS TIGHTENED TO MANUFACTURE'S RECOMMENDATION.

ANCHOR BOLT

N.T.S.

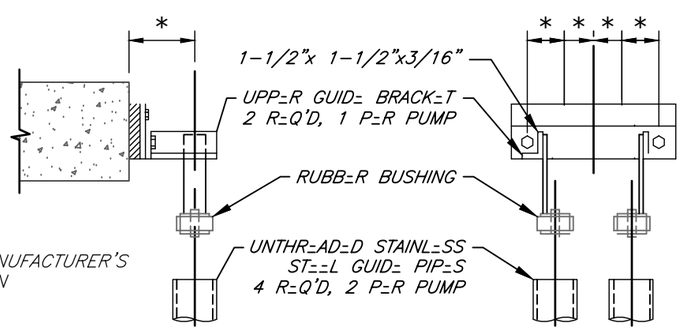

* PER PUMP MANUFACTURER'S RECOMENDATION

GUIDE BRACKET (SUPPLIED WITH PUMPS)

N.T.S.

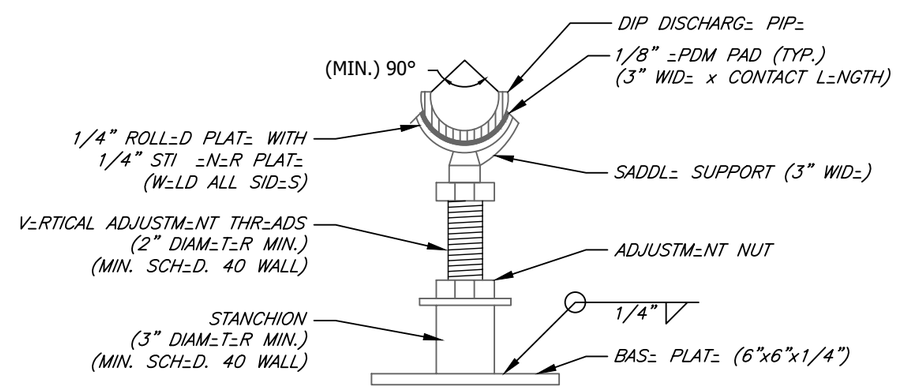

ALL PARTS ARE TO BE MADE OF T-316/316L STAINLESS STEEL

SECTION VIEW - STAINLESS STEEL STANCHION SADDLE SUPPORT

N.T.S.

No.	DATE	REVISIONS
3		
2		
1		

JACINTO CARLOS FERRAS, P.E. #49454 DESIGN DIVISION HEAD
WASTEWATER DEPARTMENT

DES: KJG
DRN: KLT
CKD:
DATE: Jun-2019

CITY of TAMPA
WASTEWATER DEPARTMENT

MARINER STREET PUMP STATION REHABILITATION

DETAILS (2 OF 3)

SHEET 11

B___-___

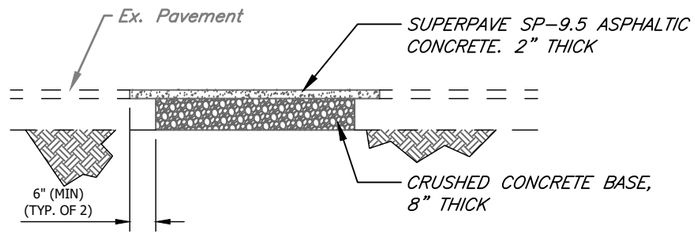

PAVEMENT RESTORATION

N.T.S.

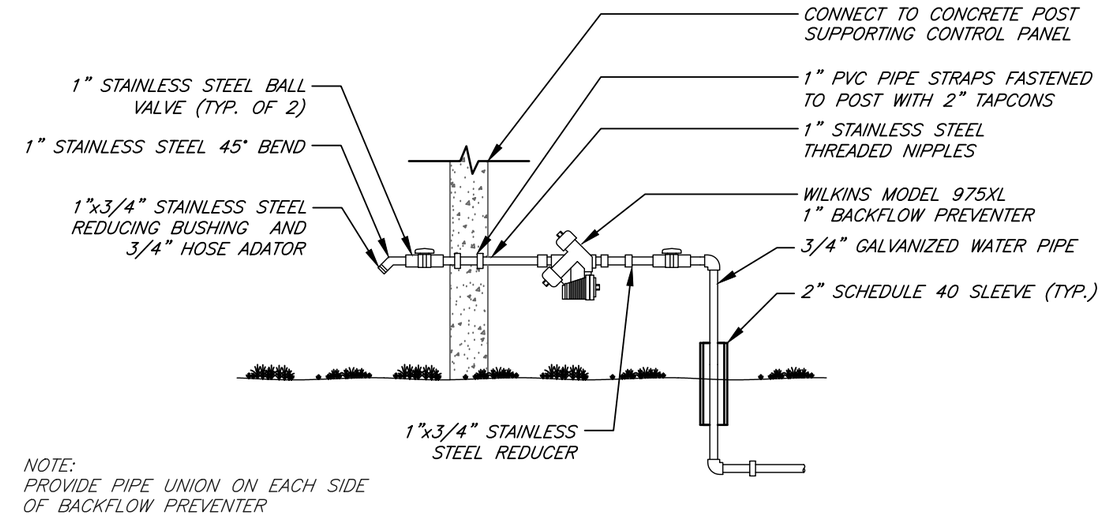

NOTE:
PROVIDE PIPE UNION ON EACH SIDE OF BACKFLOW PREVENTER

BACKFLOW PREVENTER AND HOSE BIBB

N.T.S.

NOTE: INSTALL FLOATS IN A MANNER TO MAINTAIN PROPER OPERATIONAL CLEARANCE.

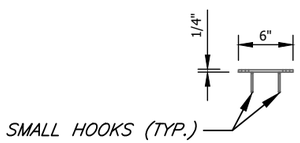

TOP VIEW SMALL HOOK

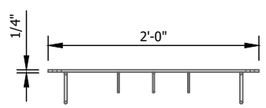

TOP VIEW LARGE RACK

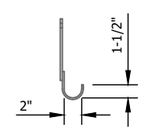

SMALL HOOK SIDE VIEW

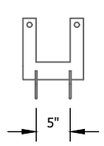

FRONT VIEW SMALL RACK (TYP. OF 2)

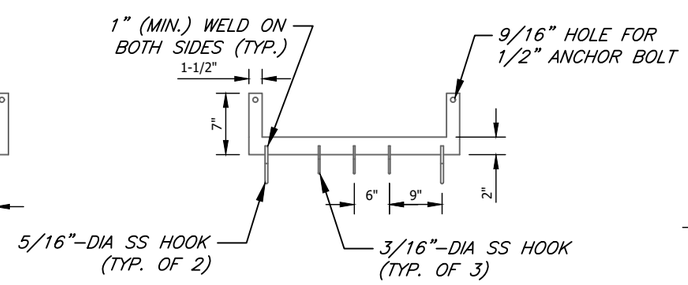

FRONT VIEW LARGE RACK (TYP. OF 2)

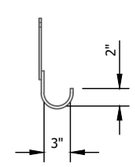

LARGE HOOK SIDE VIEW

ALL PARTS ARE TO BE MADE OF T-316/316L STAINLESS STEEL

STAINLESS STEEL HOOK RACKS

N.T.S.

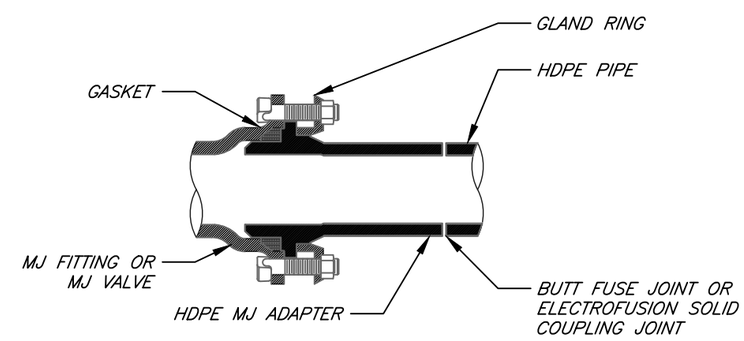

NOTE:
SCHEMATIC SHOWN FOR STANDARD MJ FITTING AND PLUG VALVES

HDPE TRANSITION

N.T.S.

No.	DATE	REVISIONS
3		
2		
1		

JACINTO CARLOS FERRAS, P.E. #49454 DESIGN DIVISION HEAD
WASTEWATER DEPARTMENT

DES: KJG
DRN: KLT
CKD:
DATE: Jun-2019

CITY of TAMPA
WASTEWATER DEPARTMENT

MARINER STREET PUMP STATION REHABILITATION

DETAILS (3 OF 3)

SHEET 12

User: ssry Drawing Name: \\sewer\SewerShare\WasteWater Projects\Mariner, Greco and Joes Place Pump Station Rehabilitation\Drafting\DWG\Mariner PS Rehabilitation.dwg
Layout- Jun 06, 2019 - 11:20am

GENERAL NOTES

1. CONTRACTOR SHALL SUBMIT SHOP DRAWINGS FOR APPROVAL PRIOR TO PURCHASING EQUIPMENT OR COMMENCING CONSTRUCTION.
2. ALL POWER CONDUCTORS SHALL BE STRANDED COPPER, #12 AWG MIN. W/ XHHW-2 INSULATION, UNLESS OTHERWISE NOTED.
3. ALL WIRING SHALL BE IDENTIFIED W/NUMBERS AT ALL TERMINALS AND ON WIRING DIAGRAMS.
4. VERIFY ALL MECHANICAL EQUIPMENT SIZES AND RATING PRIOR TO CONNECTING.
5. FIELD VERIFY ALL EQUIPMENT LOCATIONS AND CONNECTIONS PRIOR TO COMMENCING CONSTRUCTION.
6. PLANS ARE DESIGNED IN ACCORDANCE WITH THE 6TH EDITION 2017 OF THE FLORIDA BUILDING CODE AND THE 2014 EDITION OF THE NATIONAL ELECTRICAL CODE. CONTRACTOR SHALL ENSURE THAT ALL ELECTRICAL WORK PERFORMED SHALL ADHERE TO THE SAME ACCORDANCE AND ALL APPLICABLE LOCAL ORDINANCES.
7. ALL THREADED CONNECTIONS SHALL BE COATED W/ ALUMA-SHIELD ANTI-SIEZE COMPOUND MANUFACTURED BY THOMAS & BETTS (T & B) OR EQUAL.
8. ALL PANELS, DISCONNECTS, SWITCHES, AND EQUIPMENT COVERPLATES SHALL BE LABELED W/ NAMEPLATES. NAMEPLATES SHALL BE THREE-PLY PHENOLIC BLACK-WHITE-BLACK ENGRAVED THROUGH THE FIRST BLACK LAYER. LETTERING SHALL BE 0.5 CM (3/16") MIN. EDGE OF NAMEPLATE SHALL BE BEVELED 45 DEG.
9. ALL CONDUIT SHALL BE SUPPORTED AT MAXIMUM 5'-0" INTERVALS.
10. ALL CIRCUITS SHALL HAVE A PROPERLY SIZED GROUNDING CONDUCTOR ROUTED INSIDE EACH CONDUIT W/ POWER CONDUCTORS.
11. ALL CONDUCTOR LENGTHS SHALL BE CONTINUOUS, NO SPLICES OR CONDUCTOR TERMINATIONS SHALL BE PERMITTED UNLESS SPECIFICALLY DESIGNED IN THE DRAWINGS.
12. NEATLY COIL ALL SPARE CONDUCTORS & TAPE W/ VINYL ELECTRICAL TAPE (SCOTCH 33+).
13. PROVIDE A MINIMUM OF 3'-6" CLEARANCE IN FRONT OF ALL ELECTRICAL EQUIPMENT IN ACCORDANCE W/ ARTICLE 110 OF THE NEC.
14. ALL FASTENING HARDWARE (SCREW, BOLTS NUTS ETC.) SHALL BE 316-STAINLESS STEEL, FASTENING HARDWARE CONSTRUCTED OF FERROUS MATERIAL ARE NOT ACCEPTABLE.
15. EXPOSED CONDUITS SHALL BE NON-COATED RIGID ALUMINUM CONDUIT, UNLESS OTHERWISE NOTED (UON). INSTALL PVC COATED RIGID ALUMINUM CONDUIT TO THE WET WELL, UNLESS OTHERWISE NOTED (UON).
16. DIRECT BURIED AND CONCRETE ENCASED CONDUIT SHALL BE SCHEDULE 80 PVC, UNLESS OTHERWISE NOTED. TRANSITIONS FROM ABOVE-GRADE RIGID ALUMINUM CONDUIT TO NONMETALLIC CONDUIT SHALL BE ACCOMPLISHED WITH A THREADED ADAPTER. RIGID ALUMINUM CONDUIT INSTALLED ABOVE GRADE AND EXTENDING BELOW GRADE SHALL INCLUDE THE FIRST 90° ELBOW. ALL RIGID ALUMINUM CONDUITS EXTENDING BELOW GRADE SHALL BE COATED WITH TWO COATS OF ASPHALTUM-TYPE PAINT ALONG ITS ENTIRE LENGTH BELOW GRADE AND EXTENDING 6" ABOVE GRADE OR ABOVE THE TOP OF THE FINISHED SLAB.
17. ABOVE GRADE INDOOR, AND NON-WASHDOWN AREAS, RIGID ALUMINUM CONDUIT CONNECTIONS TO CONTROL BOXES, ETC. SHALL BE MADE WITH ALUMINUM DOUBLE LOCKNUTS AND BUSHINGS. TURN DOWN ON THREADS TO SOLIDLY CONNECT RACEWAY TO BOX OR ENCLOSURE.
18. ALUMINUM WATERTIGHT HUBS (MYERS HUBS) SHALL BE USED FOR CONNECTIONS TO CONTROL BOXES, ETC. MOUNTED OUTDOORS, BELOW GRADE, OR WASHDOWN AREAS.
19. A 316-STAINLESS STEEL CHANNEL ERECTOR SYSTEM SHALL BE USED TO SUPPORT ALL CONDUITS, BOXES ETC. USE 316 STAINLESS STEEL MOUNTING HARDWARE.
20. THE CONTRACTOR SHALL FIELD VERIFY EXISTING CONDITIONS AND MAKE ADJUSTMENTS AS NECESSARY TO EXECUTE THE PROPOSED INSTALLATIONS.
21. ALL EXISTING INSTALLATIONS DENOTED ON THE DRAWINGS ARE FOR THE CONTRACTORS REFERENCE ONLY. ALL EXISTING INSTALLATIONS SHALL BE FIELD VERIFIED PRIOR TO SUBMITTING A BID AND PRIOR TO COMMENCING CONSTRUCTION.
22. PULL BOXES SHALL BE INSTALLED AS NECESSARY TO FACILITATE WIRE PULLS AND AVOID EXCESSIVE PULLING TENSION ON WIRING. IN NO CASE SHALL CONDUIT LENGTHS EXCEED 150' OR THE EQUIVALENT OF FOUR QUARTER BENDS (360 DEGREES TOTAL) WITHOUT A PULL BOX. PULL BOXES SHALL BE SIZED IN ACCORDANCE WITH ARTICLE 314 OF THE NEC.
23. THE WET WELL CLASSIFICATION IS CLASS 1, DIVISION 1, GROUP D, (HAZARDOUS AREA) NEC CHAPTER 5 IS APPLICABLE FOR INTERFACING WET WELL AND THE CONTROL ENCLOSURE.
24. ALL ELECTRICAL WORK SHALL BE PERFORMED WITHIN 2014 NEC AND CITY OF TAMPA/ HILLSBOROUGH COUNTY CODES AND SHALL BE INSPECTED BY CITY OF TAMPA/ HILLSBOROUGH COUNTY ELECTRICAL INSPECTORS AS APPLICABLE.
25. ALL ELECTRICAL COMPONENTS SHALL BE UL LISTED AND AS SPECIFIED, OR AS APPROVED BY THE ENGINEER. THE PANEL BUILDER SHALL BE UL-508A CERTIFIED AND A UL LABEL SHALL BE ATTACHED TO THE INSIDE OF THE ENCLOSURE. THE DOUBLE THROW DISCONNECT MUST BE LABELED "SUITABLE FOR USE AS SERVICE EQUIPMENT."
26. THE ENCLOSURES SHALL BE NEMA 4X, THEY SHALL BE CONSTRUCTED OF MINIMUM 14 GAUGE 304SS, THEY SHALL HAVE RAL 9003 WHITE POWDER COAT AND THE CLOSING SURFACES SHALL HAVE ROLLED LIPS, PROVIDE HINGED DOORS WITH 3-POINT LATCH AND LOCKABLE HANDLES.
27. ALL COMPONENTS TO BE MOUNTED ON PANEL USING TAPPED HOLES.
28. ALL CONTROL WIRING SHALL BE STRANDED XHHW-2 COPPER, MINIMUM AWG #14 AND SHALL HAVE SPADE LUG TERMINATIONS.
29. ALARM FLOAT SWITCH WILL BE SUPPLIED BY THE CITY, BUT INSTALLED BY CONTRACTOR.
30. DIMENSIONS, ITEMS, OR ELEVATIONS MARKED "*" TO BE DETERMINED AFTER EQUIPMENT SELECTION.
31. ALL MECHANICAL CONNECTORS SHALL BE TORQUED PER NEC, UL OR MANUFACTURES SPECIFICATIONS.
32. INSTALL LAMINATED SCHEMATIC, LAMINATED DATA SHEET AND LAMINATED SOFT STARTER SETUP PARAMETERS ON BACK FACE OF THE DOOR INSIDE THE ENCLOSURE.
33. ENSURE THAT LINE CONNECTIONS TO METER SOCKET PROVIDE CORRECT MOTOR ROTATION.
34. CONDUCTORS WITHIN THE ENCLOSURE AND NOT ROUTED IN WIREWAYS, SHALL BE SECURED TO THE BACK PANEL WITH MECHANICAL FASTENERS, FASTENERS SECURED WITH ADHESIVE ARE NOT ACCEPTABLE.
35. ALL HINGED SURFACES SHALL BE GROUNDED WITH A BONDING JUMPER SECURED TO THE ENCLOSURE OR BACKPANEL.
36. THE PUMP CONTROL PANEL SHALL BE FACTORY TESTED. THE CONTRACTOR SHALL PROVIDE A CERTIFIED TESTING REPORT DETAILING THE TESTS MADE AND THAT THE EQUIPMENT IS IN WORKING ORDER. A COPY OF THE REPORT SHALL BE PROVIDED TO THE CITY PRIOR TO DELIVERY AND A COPY SHALL BE INCLUDED WITH THE CONTROL PANELS AT AT THE TIME OF DELIVERY.
37. A WET WELL LEVEL DETECTION SYSTEM SHALL BE PROVIDED AND INSTALLED BY THE CONTRACTOR. THE OUTPUT SHALL BE A LINEAR 4-20mA SIGNAL WITH RANGE AND CALIBRATION SUITABLE FOR THIS APPLICATION. THE SYSTEM SHALL BE OF THE ULTRASONIC TYPE-PULSAR, INC. MODEL dB10 W/ BLACKBOX 130 TRANSMITTER. CITY INSTRUMENTATION PERSONNEL WILL ASSIST THE CONTRACTOR WITH SPECIFYING THE TRANSDUCER MOUNTING LOCATION AND CALIBRATION. THE dB10 TRANSDUCER SHALL BE MOUNTED USING A 2 1/2" x 1/4" S.S. BRACKET, SEE dB10 MOUNTING BRACKET DETAIL, SHEET E7.
40. PROVIDE LEXAN SHIELDS OVER POWER DISTRIBUTION BLOCK EXPOSED CABLE TERMINATIONS.
41. ALUMINUM CONDUIT SURFACES THAT ARE IN CONTACT WITH SOIL OR CONCRETE SHALL BE COATED WITH TWO COATS ASPHALT VARNISH (FED. SPEC. TT-V-51) EXTENDING 4" BEYOND FINAL CONTACT POINT.
42. STAINLESS STEEL HANGERS TO SUPPORT THE EXCESS LENGTH OF MOTOR CABLES SHALL BE INSTALLED IN THE WET WELL. THESE HANGERS SHALL BE LOCATED IN A SEPARATE AREA FROM THE HANGERS SUPPORTING THE PUMP CHAINS.

ELECTRICAL DRAWING INDEX

ROMAN D. KORCHAK, P.E. #42626
ELECTRICAL SECTION HEAD
WASTEWATER DEPARTMENT

No.	DATE	REVISIONS
3		
2		
1		

DES: RK
DRN: RK
CKD:
DATE: 11/20/18

CITY of TAMPA
WASTEWATER DEPARTMENT

MARINER ST. PUMPING STATION
ELECTRICAL DRAWING INDEX &
GENERAL NOTES

W.O. 0000
SHEET
EGI

= LINE DIAGRAM SYMBOLS

600 - BUS–RATING AS SHOWN

INCOMING LIN=

OUTCOMING LIN=

DISCONN=CTING D=VIC=

CONDUCTORS CONN=CT=D

CONDUCTORS NOT CONN=CT=D

-
=–RATING AS SHOWN

100- SINGL= THROW DISCONN=CT SWITCH–RATING AS SHOWN

100-/70 =D DISCONN=CT SWITCH–100A SWITCH, 70A =

100- LOW VOLTAG= AIR CIRCUIT BR=AK=R WITHOUT TRIP D=VIC= - - \AM=

225-/125- LOW VOLTAG= AIR CIRCUIT BR=AK=R WITH 225A - \AM= AND 125A TRIP

52 M=DIUM VOLTAG= DRAWOUT TYP= AIR CIRCUIT BR=AK=R

GROUND CONN=CTION

SPD LIGHTNING OR SURG= ARR=STOR

SURG= CAPACITOR

A POW=R TRANS- \M=R WITH WINDING CONN=CTIONS INDICAT=D

CPT CONTROL POW=R TRANS- \M=R

PT POT=NTIAL TRAN- \M=R

CT CURR=NT TRANS- \M=R

TH=RMAL OV=RLOAD =L=M=NT (OL)

5 SQUIRR=L CAG= MOTOR (INDICAT= HORS=POW=R)

G G=N=RATOR

R INDICATING LIGHT (R–R=D, G–GR==N, A–AMB=R, B–BLU=, W–WHIT=)

COMBINATION START=R WITH CONTROL TRANS- \M=RS AND OV=RLOAD R=LAYS AND MOTOR CIRCUIT PROT=CTOR

M - TAG= NON R=V=RSING

F R - TAG= R=V=RSING

F S - TAG= TWO SP==D

SCHEMATIC AND WIRING DIAGRAM SYMBOLS

M OP=RATING COIL

M–MOTOR START=R
C– CONTACTOR
-– - \WARD
R– R=V=RS=

AR– AUXILIARY R=LAY
CR– CONTROL R=LAY
TR– TIM= D=LAY R=LAY

NORMALLY OP=N CONTACT (N.O.)

NORMALLY CLOS=D CONTACT (N.C.)

NORMALLY OP=N CONTACT WITH TIM= D=LAY CLOSING (ON–D=LAY)

INSTANT OP=N– TIM= D=LAY CLOS=D CONTACT (O =LAY)

NORMALLY CLOS=D CONTACT WITH TIM= D=LAY OP=NING (ON–D=LAY)

INSTANT CLOS=– TIM= D=LAY OP=N CONTACT (O =LAY)

R INDICATING LIGHT– PUSH TO T=ST (R–R=D, G–GR==N, A–AMB=R, B–BLU=, W–WHIT=)

H 3–POSITION S=L=CTOR SWITCH HOWN IN "H" POS.)

NORMALLY OP=N PUSHBUTTON–MOM=NTARY CONTACT

NORMALLY CLOS=D PUSHBUTTON–MOM=NTARY CONTACT

DOUBL= CIRCUIT PUSHBUTTON WITH SPRING R=TURN TO NORMAL

TRANS- \M=R

OL OV=RLOAD R=LAY CONTACT

TH=RMAL OV=RLOAD =L=M=NT (OL)

ON–O - ITCH

G GROUND BUS

N N=UTRAL BUS (INSULAT=D)

SINGL=–POL= CIRCUIT BR=AK=R

NORMALLY OP=N N.O.	NORMALLY CLOS=D N.C.	
		LIMIT SWITCH
		- -T SWITCH
		PR=SSUR= SWITCH
		- ITCH
		T=MP=RATUR=

NOTE:

THE SYMBOLS SHOWN COMPRISE A GENERAL LEGEND TO FACILITATE THE USE OF PLANS. REFER TO THE PLANS AND SPECIFICATIONS FOR ITEMS REQUIRED.

ROMAN D. KORCHAK, P.E. #42626
ELECTRICAL SECTION HEAD
WASTEWATER DEPARTMENT

No.	DATE	REVISIONS
3		
2		
1		

DES: RK
DRN: RK
CKD:
DATE:11/20/18

CITY of TAMPA
WASTEWATER DEPARTMENT

MARINER ST. PUMPING STATION
ELECTRICAL SYMBOLS LEGEND
(SHT. 1 OF 2)

W.O. 0000
SHEET
EG2

POWER AND LIGHTING SYMBOLS

=XPOS=D CONDUIT RUN

CONDUIT RUN CONC=AL=D IN - \ OR UND=RGROUND

CONDUIT RUN CONC=AL=D IN WALLS, ABOV= SUSP=ND=D C=ILING, OR IN ROO- -B

CONDUIT WITH HOT, N=UTRAL AND GROUND WIR=S (LONG LIN= IS N=UTRAL; LONG LIN= WITH DOTS D=NOT= GROUND)

PNL-1 1,3,5 — HOM=RUN TO LIGHTING PAN=LBOARD (PNL-1 INDICAT=S PAN=LBOARD AND 1, 3, 5 INDICAT=S 20A-1P CKTS. 1, 3 AND 5)

=XIBL= LIQUIDTIGHT CONDUIT

CONDUIT-UP (OR TOWARDS VI=W=R)

CONDUIT-DOWN (OR AWAY - \OM VI=W=R)

G — G — GROUNDING CONDUCTOR

GROUND ROD

LIGHTNING ROD

C=ILING MOUNT=D INCAND=SC=NT OR M=RCURY VAPOR -IXTUR=. "A" INDICAT=S -IXTUR= TYP= LIST=D IN SCH=DUL=

WALL MOUNT=D LIGHTING -IXTUR=

=XIT SIGN

=M=RG=NCY INCAND=SC=NT OR M=RCURY VAPOR LIGHTING -IXTUR=

- \=SC=NT -IXTUR=

=M=RG=NCY - \=SC=NT -IXTUR=

POL= MOUNT=D LIGHTING -IXTUR=

4 — DUPL=X R=C=PTACL=- 20 A, 120 V, 3 WIR= (TO PNL- CIRCUIT No.4)

30 - SINGL= R=C=PTACL= - 2 POL=, 3 WIR=, 240V, RATING NOT=D

60 - 3 POL=, 4 WIR=, 240V W=LDING OUTL=T (60 A)

SINGL= POL= SWITCH

2P — TWO POL= SWITCH

3 — THR== WAY SWITCH

J — OUTL=T BOX WITH BLANK COV=R

JB — JUNCTION BOX

PB — PULL BOX

TB — T=RMINAL BOX

GENERAL SYMBOLS

START-STOP PUSHBUTTON

ON/O -/L — ON-O - -INTAIN=D CONTACT PUSHBUTTON WITH LOCK ATTACHM=NT

S/L — INDICATING LIGHT AND START-STOP PUSHBUTTON WITH LOCK ATTACHM=NT ON STOP

R=SUM= STOP/L — PUSH/PULL BUTTON WITH STOP LOCK. (PULL TO R=SUM=- PUSH TO STOP)

S=L=CTOR SWITCH ("HOA" INDICAT=S HAND, O - -ND - TO; "MOR" INDICAT=S MANUAL, O - -ND R=MOT=; =TC)

L — ON-O - ITCH WITH LOCK ATTACHM=NT ON O - ITION

- — - ITCH

LS — LIMIT SWITCH

P — PR=SSUR= SWITCH

S — SOL=NOID OP=RAT=D VALV=

T — T=MP=RATUR= SWITCH

- — - -T SWITCH

L — L=V=L TRANSMITT=R (PR=SSUR= ANALOG TYP=)

LC — L=V=L TRANSMITT=R (- -T TYP=)

T — T=MP=RATUR= TRANSMITT=R

-T — - TRANSMITT=R

MH — D=SIGNAT=S MOUNTING H=IGHT

WP — D=SIGNAT=S WAT=RPROO =QUIPM=NT

XP — D=SIGNAT=S =XPLOSIONPROO =QUIPM=NT

MOV — D=SIGNAT=S MOTOR OP=RAT=D VALV=

=X. — D=SIGNAT=S =XISTING =QUIPM=NT

PROP. — D=SIGNAT=S PROPOS=D =QUIPM=NT

NOTE:

THE SYMBOLS SHOWN COMPRISE A GENERAL LEGEND TO FACILITATE THE USE OF PLANS. REFER TO THE PLANS AND SPECIFICATIONS FOR ITEMS REQUIRED.

ROMAN D. KORCHAK, P.E. #42626
ELECTRICAL SECTION HEAD
WASTEWATER DEPARTMENT

No.	DATE	REVISIONS
3		
2		
1		

DES: RK
DRN: RK
CKD:
DATE:11/20/18

CITY of TAMPA
WASTEWATER DEPARTMENT

MARINER ST. PUMPING STATION
ELECTRICAL SYMBOLS LEGEND
(SHT. 2 OF 2)

W.O. 0000
SHEET
EG3

PUMP MOTOR DATA

MAKE: FLYGT

MODEL: NP–3085–463 WITH 135mm IMPELLER AND MIX FLUSH VALVE ON ONE PUMP

H.P.: 3

230V, 3–PHASE, 8.7 FLA

TOTAL PUMP LOAD: 17.4 AMPS, 7.24 KVA

ELECTRICAL SERVICE LOAD SUMMARY

240 VAC, 3ø, 4W

LOAD	CONNECTED	DEMAND	APPROX. PHASE CURRENTS L1	L2	L3
PUMP #1	3.6 KVA	3.6 KVA	8.7 A	8.7 A	8.7 A
PUMP #2	3.6 KVA	3.6 KVA	8.7 A	8.7 A	8.7 A
PUMP CONTROL PANEL	2.0 KVA	2.0 KVA	8.3 A	0	8.3 A
TOTAL	9.2 KVA	9.2 KVA	25.7 A	17.4 A	25.7 A

SHORT CIRCUIT CURRENT INFORMATION

THE AVAILABLE FAULT CURRENT AT THE SECONDARY LUGS OF THE POLE–MOUNTED TRANSFORMER BANK IS 10420 AMPS. THE AVAILABLE FAULT CURRENT AT THE LINE–SIDE OF THE FDTS DISCONNECT IS 7410 AMPS. THE INTERRUPTING RATING, IR, OF THE FDTS RK5 CURRENT LIMITING FUSE IS 200KA RMS, SYMETRICAL. THE LET–THROUGH CURRENT OF THE FUSE AT 8 KA SHORT CIRCUIT CURRENT IS 3500 AMPS RMS, SYMETRICAL WHICH IS THE FAULT CURRENT AT THE PUMP CONTROL PANEL (PCP).

SCOPE OF WORK:

1. THE SERVICE VOLTAGE TO THIS FACILITY SHALL REMAIN 120/240 VAC., 3–PHASE, 4–WIRE, DELTA.
2. REMOVE THE EXISTING METER SOCKET, LIGHTNING ARRESTOR, PUMP CONTROL ENCLOSURE, EQUIPMENT SUPPORTS, AND ALL ASSOCIATED CONDUIT AND CONDUCTORS, AS SHOWN ON THE PLANS.
3. CAREFULLY REMOVE THE EXISTING SCADA RTU CABINET MOUNTED ADJACENT TO THE EXISTING PUMP CONTROL ENCLOSURE. THIS RTU SHALL BE REUSED IN THE CURRENT DESIGN, AS SHOWN. EXISTING CABINET PENETRATIONS NOT REUSED SHALL BE COVERED WITH STAINLESS STEEL PLUGS.
4. ANY SALVAGEABLE MATERIALS, AS DETERMINED BY THE ENGINEER, SHALL BE DELIVERED, BY THE CONTRACTOR, TO THE HOWARD F. CURREN AWTP. THE CONTRACTOR SHALL PROPERLY DISPOSE OF ALL OTHER REMOVED EQUIPMENT.
5. PREPARE THE SITE FOR THE INSTALLATION OF THE PROPOSED ELECTRICAL EQUIPMENT.
6. PROVIDE AND INSTALL A NEW ELECTRICAL METER SOCKET, LIGHTNING ARRESTOR AND GROUNDING, AS SHOWN ON PLANS.
7. PROVIDE AND INSTALL A NEMA 4X, SERVICE ENTRANCE RATED, FUSED DOUBLE THROW SWITCH, AS SHOWN ON PLANS.
8. PROVIDE AND INSTALL A NEMA 4X, EMERGENCY POWER CONNECTOR, AS SHOWN ON THE PLANS.
9. PROVIDE AND INSTALL A NEW DUPLEX PUMP CONTROL PANEL. THE PUMP CONTROL PANEL SHALL CONTAIN CONTROL COMPONENTS, INDICATOR LIGHTS, AND COMMUNICATION EQUIPMENT AS SHOWN ON PLANS AND DETAILED IN THE SPECIFICATIONS.
10. PROVIDE AND INSTALL (2) NEMA 4X WET WELL ISOLATION JUNCTION BOXES FOR PUMPS MOTOR CONNECTIONS.
11. PROVIDE AND INSTALL NEMA 4X WET WELL ISOLATION BOX FOR INSTRUMENTATION AND CONTROL CONNECTIONS.
12. INSTALL EXISTING SCADA RTU ON PROPOSED EQUIPMENT RACK, AS SHOWN. PROVIDE AND INSTALL ALL REQUIRED CONDUITS AND CONDUCTORS AS SHOWN, SPECIFIED OR REQUIRED. CITY I & C PERSONNEL WILL MAKE FINAL CONNECTIONS AND MAKE THE REQUIRED SOFTWARE MODIFICATIONS.
13. CALIBRATE AND ADJUST SETPOINTS FOR ALL SENSING DEVICES, ALARM DEVICES, AND TIMERS. CALIBRATION AND SETPOINTS SHALL BE PROVIDED IN ACCORDANCE WITH MANUFACTURER'S RECOMMENDATIONS.
14. PROVIDE FOR PROPER GROUNDING AS SHOWN, SPECIFIED, AND REQUIRED.
15. PROVIDE AND INSTALL ALL NECESSARY CONDUITS AND CONDUCTORS, AS SHOWN, SPECIFIED AND REQUIRED.
16. ALL ELECTRICAL WORK SHALL BE PERFORMED IN ACCORDANCE WITH THE 2014 EDITION OF THE NATIONAL ELECTRIC CODE AND CHAPTER 5 OF THE CITY OF TAMPA CODE.
17. REFER TO CIVIL/MECHANICAL SHEETS FOR BYPASS PUMPING REQUIREMENTS. IF ELECTRICALLY DRIVEN BYPASS PUMPS ARE UTILIZED, THE CONTRACTOR SHALL COORDINATE ALL TEMPORARY ELECTRICAL SERVICE REQUIREMENTS WITH TAMPA ELECTRIC COMPANY (TECO). ANY COSTS ASSOCIATED WITH TEMPORARY ELECTRIC POWER ARE TO BE INCLUDED IN THE LUMP SUM PRICE AND NO SEPERATE PAYMENT WILL BE MADE.

ROMAN D. KORCHAK, P.E. #42626
ELECTRICAL SECTION HEAD
WASTEWATER DEPARTMENT

No.	DATE	REVISIONS
3		
2		
1		

DES: RK
DRN: RK
CKD:
DATE:3/18/19

CITY of TAMPA
WASTEWATER DEPARTMENT

MARINER ST. PUMPING STATION
ELECTRICAL SCOPE & PARAMETERS

W.O. 0000
SHEET
EG4

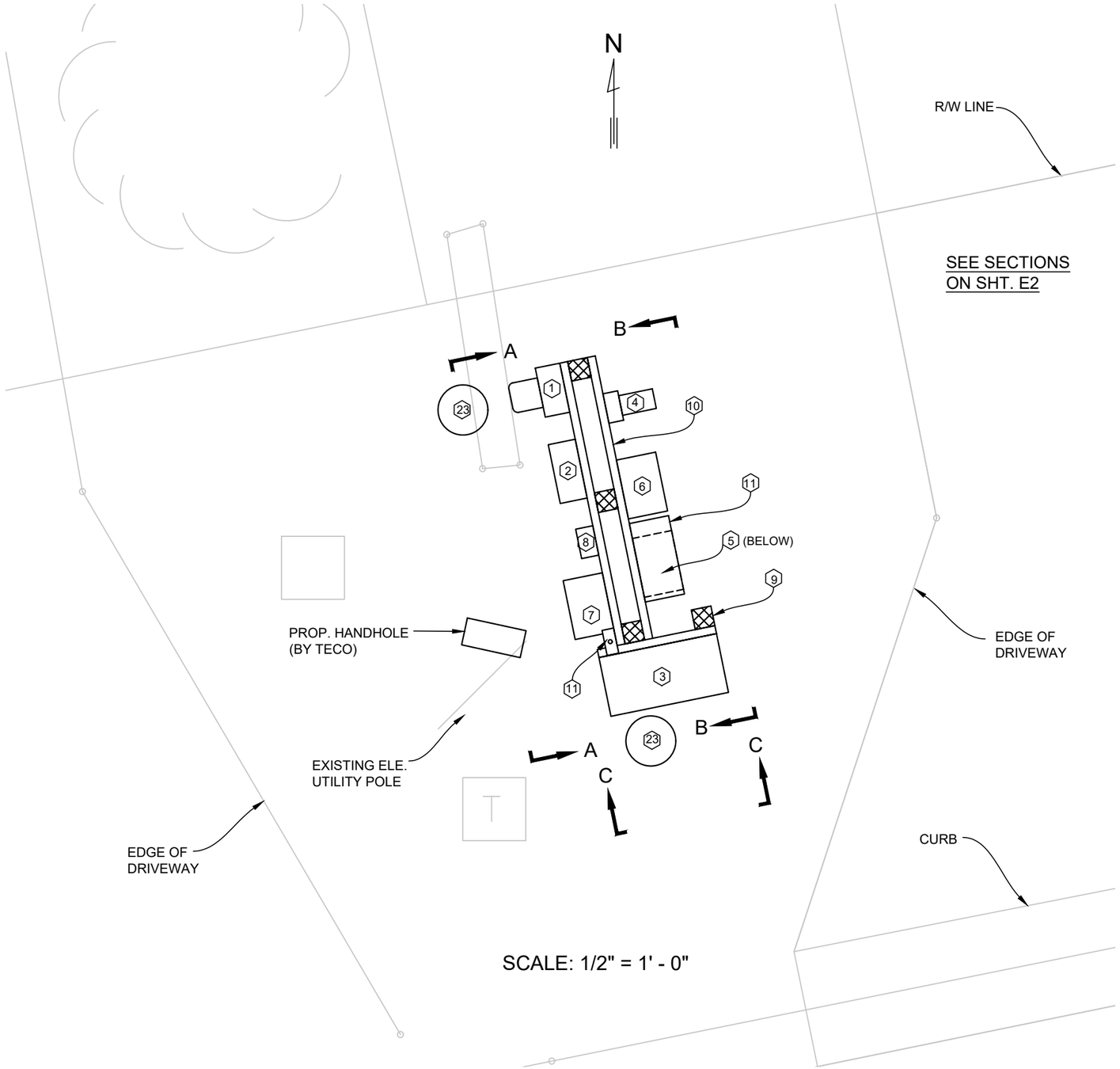

SCALE: 1/2" = 1' - 0"

KEYED NOTES ARE LISTED ON SHEET E6

NOTE: ALL EQUIPMENT MARKED WITH KEYED NOTES ON THIS SHEET IS PROPOSED..

ROMAN D. KORCHAK, P.E. #42626 ELECTRICAL SECTION HEAD WASTEWATER DEPARTMENT	No.	DATE	REVISIONS	DES: RK DRN: RK CKD: DATE:3/04/19	CITY of TAMPA WASTEWATER DEPARTMENT	MARINER ST. PUMPING STATION PROPOSED ELECTRICAL SITE PLAN	W.O. 0000 SHEET E1
	3						
	2						
	1						

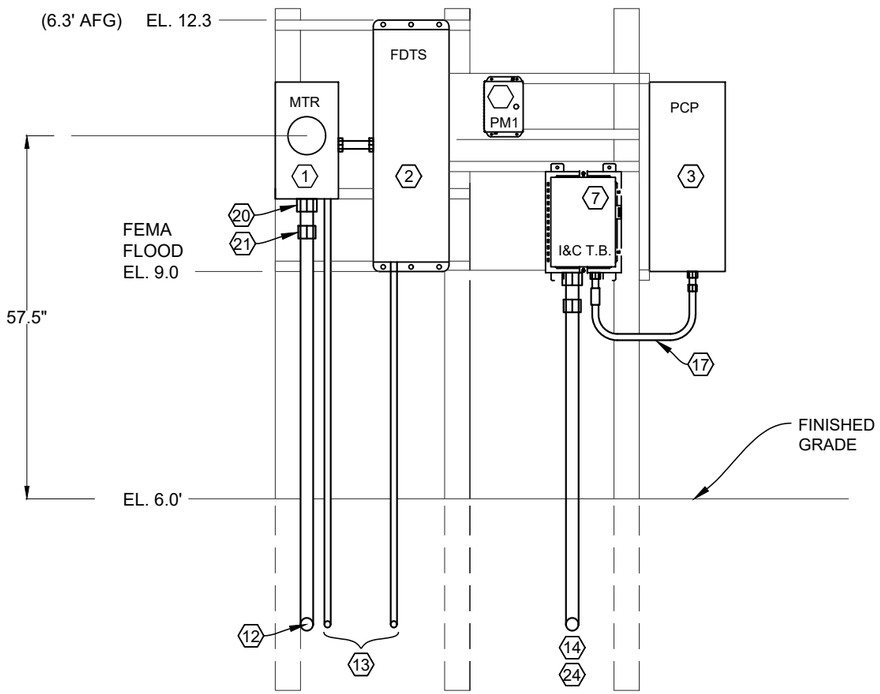

SECTION A-A

1/2" = 1' - 0"

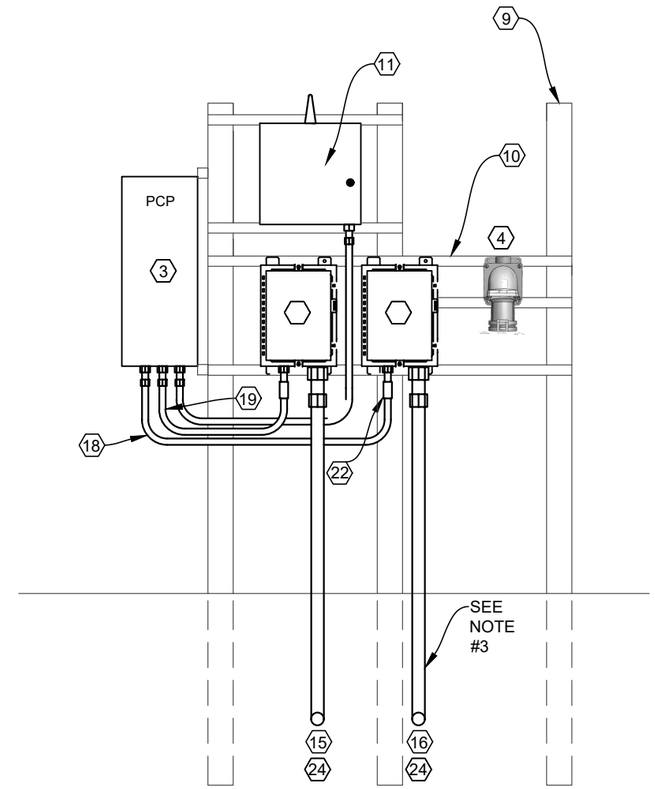

SECTION B-B

1/2" = 1' - 0"

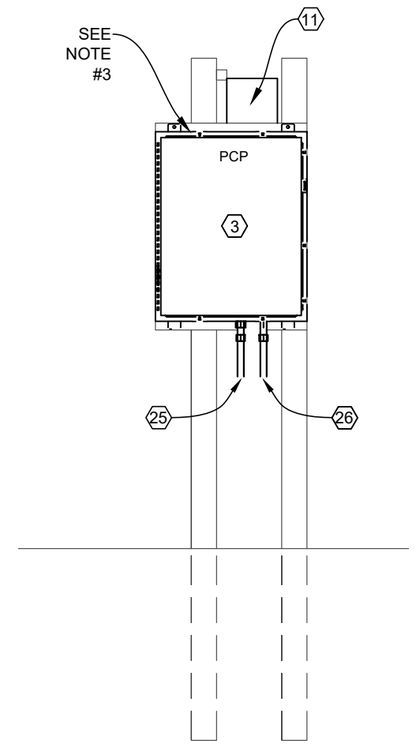

SECTION C-C

1/2" = 1' - 0"

NOTES:

1. SEE KEYED NOTES ON SHEET E6 (X)
2. THE CONDUITS SHOWN ON THIS SHEET ARE A SAMPLE OF THOSE REQUIRED. THE CONTRACTOR IS RESPONSIBLE FOR INSTALLING AND PROPERLY SECURING ALL CONDUITS DESCRIBED IN THE PLANS / SPECIFICATIONS AND REQUIRED TO COMPLETE THIS PROJECT.
3. NO PENETRATIONS SHALL BE MADE TO TOP OF ENCLOSURE. CONDUITS SHOULD ENTER BOTTOM OF ENCLOSURE WHEREVER POSSIBLE (TYP.).

ROMAN D. KORCHAK, P.E. #42626
ELECTRICAL SECTION HEAD
WASTEWATER DEPARTMENT

No.	DATE	REVISIONS
3		
2		
1		

DES: RK
DRN: RK
CKD:
DATE:3/06/19

CITY of TAMPA
WASTEWATER DEPARTMENT

MARINER ST. PUMPING STATION
ELECTRICAL SECTIONS

W.O. 0000
SHEET
E2

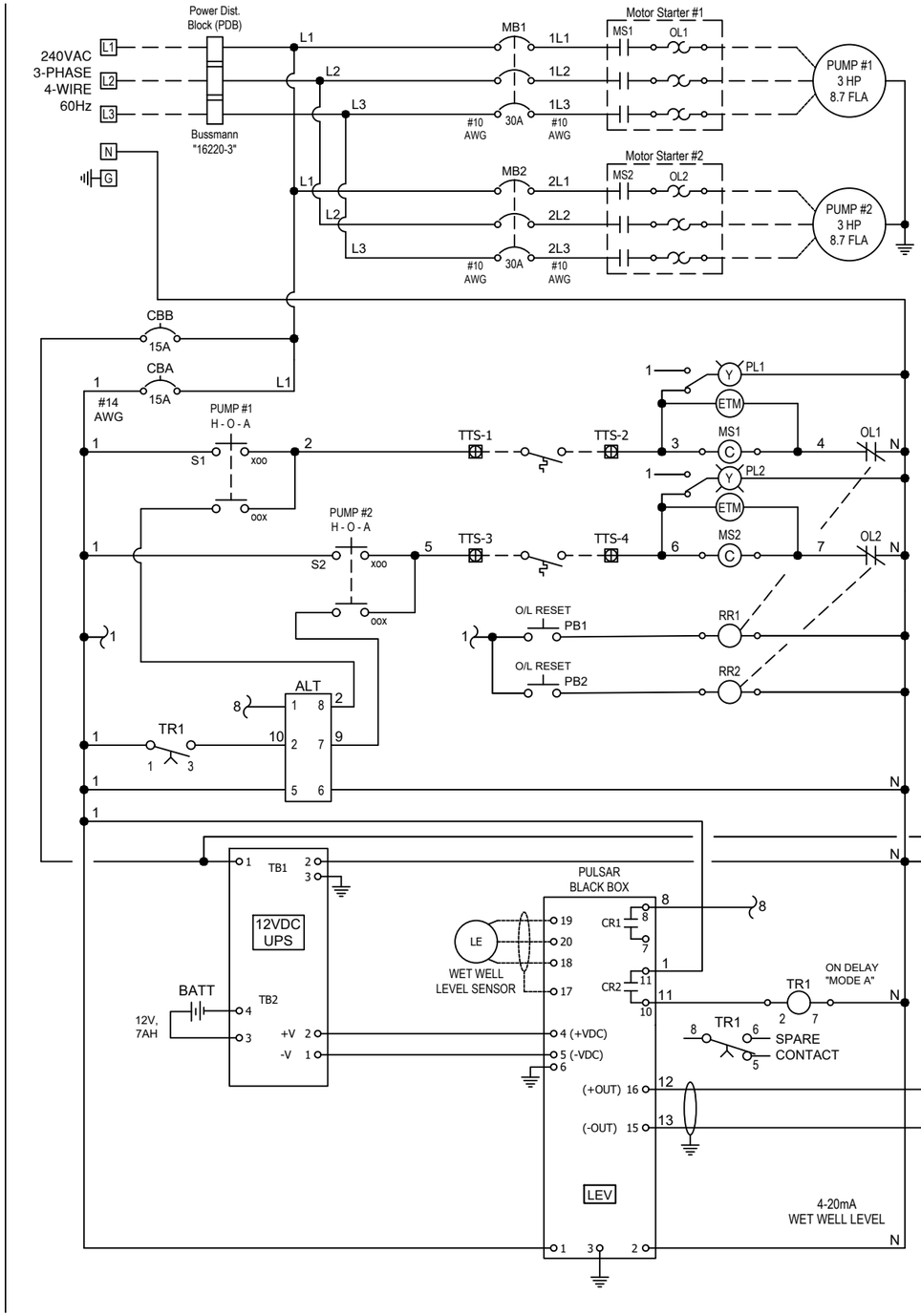

INNER DOOR / BACK PANEL LAYOUTS

(OUTER DOOR REMOVED FOR CLARITY)

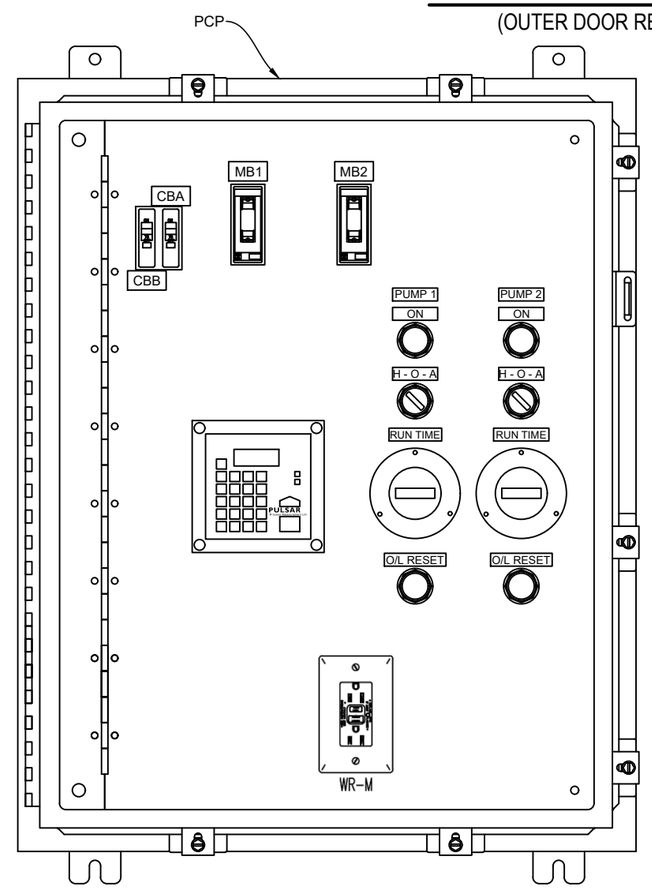

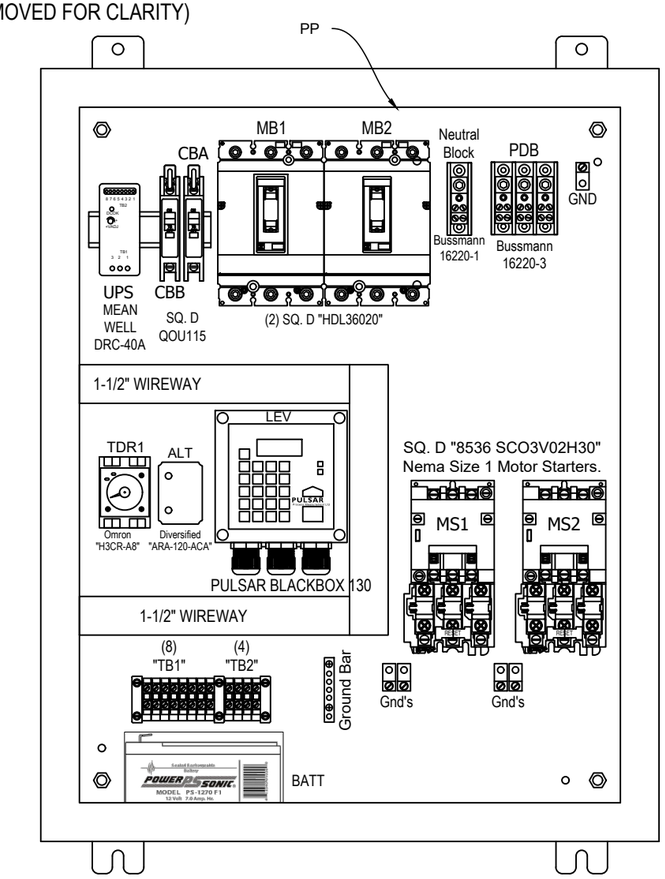

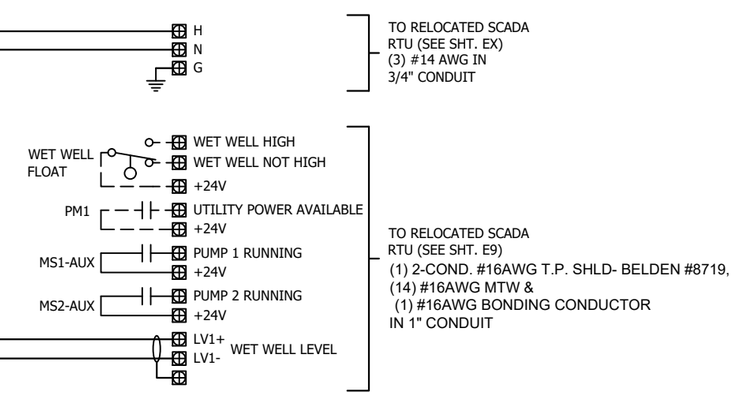

ROMAN D. KORCHAK, P.E. #42626
ELECTRICAL SECTION HEAD
WASTEWATER DEPARTMENT

No.	DATE	REVISIONS
3		
2		
1		

DES: RK
DRN: RK
CKD:
DATE:3/20/19

CITY of TAMPA
WASTEWATER DEPARTMENT

MARINER ST. PUMPING STATION ELECTRICAL- PUMP CONTROL PANEL SHT. 1 OF 2

W.O. 0000

SHEET
E3

PARTS SCHEDULE

SYMBOL	NAME	PART				REMARKS
		MAKE	TYPE	MODEL OR CAT. #	RATING	
MB1	CIRCUIT BR=AK=R	SQU- \= D	THR== POL=	HDL 36020	-	25 KAIC @ 240VAC
MB2	CIRCUIT BR=AK=R	SQU- \= D	THR== POL=	HDL 36030	600 V, 30A	
PDB	POW=R DISTRIBUTION BLOCK	BUSSMANN	THR== POL=	16220-3	600V, 175	
CB-	CIRCUIT BR=AK=R	SQUAR= D	SINGL= POL=	QOU-115	120 V, 15-	
	MOTOR ST- \T=R	SQUAR= D	N=MA SIZ= 1, W/ S.S. O/L R=LAY	-SS 8536 MOD=L SCO3V02H30	120V (COIL)	7.5 HP (MAX), W/ AUX. CONT- T
RR1, RR2	OV=RLOAD R=L- ′ R=MOT= R=S=T	SQUAR= D	=L=CTRICAL OP=RATION	CLASS 9999 TYP= RR04	120VAC	- \ US= W/ ABOV= MS
	=UTRAL BLOCK	BUSSMANN	SINGL= POL=	16220-1		
PL1, PL2	INDICATOR LIGHT	SQUAR= D	CLASS 9001	SKT - 38LY-	120 V, L=D TYP=	Y=LLOW L=NS & PR=SS T=ST
SPD1	SURG= PROT=CTION D=VIC=	M=RS=N =L=CTRICAL POW=R	TYP= 1	STXR240D05	240 V, 3-PH = D=LT-	
-LT	PUMP ALT=RNATOR	DIV=RSI-I=D =L=CTRONICS	AUTO S=QU=NC=R OR L=AD S=L=CTION	ARB-120-ACA	120VAC CONTR., 10A CONT- TS	3-POS. SW: "LOCK1-NORM-LOCK2"
S1, S2	HOA SWITCH =MBLY	SQUAR= D	OIL-TIGHT CLASS 9001	SKS - 43B H2	10A @ 120V CONTACTS	
=TM1, =TM2	=LAPS=D TIM= M=T=R	CRAM=R	ROUND B=Z=L, NON R=S=T	635-=	120 V	W.W. GRANG=R CAT. NO. 6X144
TR1	SOLID STAT= TIM=R R=L- ′	OMRON	PROGR- -BL= MOD=S AND TIM=	H3CR-A8 100-240AC/100-125DC	120VAC CONTR., 250V - T	S=T TO ON-D=LAY MOD=
-	L=D LIGHTING -IXTUR=	HO - -N	L=D	=DA1S35	120 V, 5W	INCLUD=S TOGGL= SWITCH
\	WALL R=C=PTACL=	HUBB=LL	DUPL=X W/G-I	G	120V AC, 15A G-I	W/ALUMINUM COV=R
12VDC UPS	POW=R SUPPLY / UPS	M= =LL	DUPL=X W/G-I	DRC-40A	90-264V- INPUT, 13.8VDC OUTPUT	CH1- 1.9- H2- 1A OUTPUT
TB1, TB2	T=RMINALS	PHO=NIX CONTACT	SINGL= OUTPUT WITH B-TT=RY CH- \G=R	UK5N T=RMINALS	30 A W/ ALUM. DIN RAIL	20 CONTACTS (MIN)
PB1, PB2	PUSH BUTTON	SQUAR= D	CLASS 9001	SKR1-BH5	CONTACT- 10 A @ 120 VAC	BLACK W/ - -RD
PCP	PUMP CONTROL P =L =NCLOSUR=	SCHA= =R'S =NCLOSUR=S	N=MA 4X, W/ PADLOCK PROVISION	SPN4SS-302412	30"H X 24"W X 12'D 316 S/S	WITH DOOR STOP KIT. =XT=RNAL -INISH DURABL= RAL 9003 WHIT= POWD=R CO-T.
PP	=NCLOSUR= P =L	CUSTOM	AS R=Q'D	------	0.125" ALUMINUM	
GB1	GROUND BAR SYST=M	PANDUIT	6 PORT WITH MAIN LUG	UGB2/0-414-6		COPP=R CONSTRUCTION
GB2	GROUNDING BLOCK	ILSCO	- \=QUIR=D	AS R=QUIR=D		
L=V	W=T W=LL L=V=L S=NSOR	PULS- \, INC.	ULTRASONIC	dB10 TRANSDUC=R W/ BL- KBOX 130 TRANSMITT=R PART #: 130-110-300-00P-KP-TROP	1 TD 32.8 -T R = 115VAC/24VDC POW=R=D W/ 4-20MA AND (2) R=LAY OUT W/ K=Y PAD, DISPLAY, AND TROPICALIZATION	CITY - \C=S WILL PROVID= ASSISTANC= WITH MOUNTING AND C- IBRATION

ROMAN D. KORCHAK, P.E. #42626
ELECTRICAL SECTION HEAD
WASTEWATER DEPARTMENT

No.	DATE	REVISIONS
3		
2		
1		

DES: RK
DRN: RK
CKD:
DATE:3/21/19

CITY of TAMPA
WASTEWATER DEPARTMENT

MARINER ST. PUMPING STATION
ELECTRICAL- PUMP CONTROL PANEL
SHT. 2 OF 2

W.O. 0000
SHEET
E4

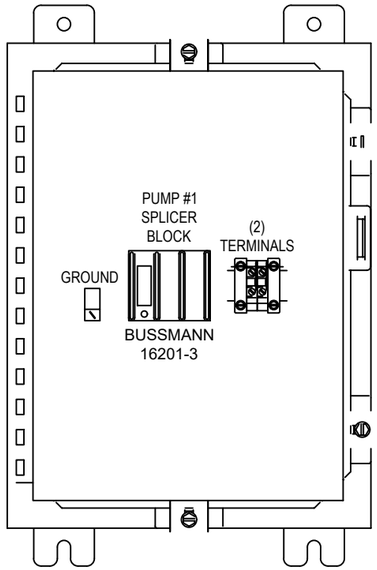

PUMP #1 MTR TERMINAL BOX BACK PANEL LAYOUT

(OUTER DOOR SHOWN REMOVED FOR CLARITY)

JUNCTION BOX ENCLOSURE:
SCHAEFER'S ELECTRICAL ENCLOSURES
SPN4SS6-16128 (16"H X 12"W X 8"D) NEMA 4X RATED, FABRICATED FROM 14 GA. TYPE 316 STAINLESS STEEL. STAINLESS STEEL DOOR CLAMPS AND HASP & STAPLE PADLOCKING PROVISION PROVIDED.

JUNCTION BOX BACK PANEL:
SPP-1612 (13H" x 9W") FABRICATED FROM 12 GA. CARBON STEEL, FINISHED IN WHITE POLYESTER POWDER COAT.

JUNCTION BOX LOUVER PLATE KIT:
SP-VKSS644 (5.62"H X 5.5"W) 316 STAINLESS STEEL. MOUNT TO SIDE OF ENCLOSURE.

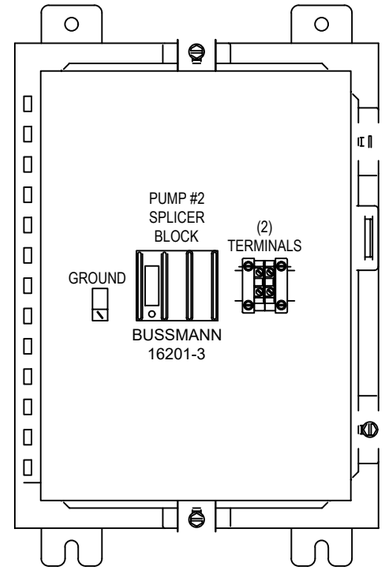

PUMP #2 MTR TERMINAL BOX BACK PANEL LAYOUT

(OUTER DOOR SHOWN REMOVED FOR CLARITY)

JUNCTION BOX ENCLOSURE:
SCHAEFER'S ELECTRICAL ENCLOSURES
SPN4SS6-16128 (16"H X 12"W X 8"D) NEMA 4X RATED, FABRICATED FROM 14 GA. TYPE 316 STAINLESS STEEL. STAINLESS STEEL DOOR CLAMPS AND HASP & STAPLE PADLOCKING PROVISION PROVIDED.

JUNCTION BOX BACK PANEL:
SPP-1612 (13H" x 9W") FABRICATED FROM 12 GA. CARBON STEEL, FINISHED IN WHITE POLYESTER POWDER COAT.

JUNCTION BOX LOUVER PLATE KIT:
SP-VKSS644 (5.62"H X 5.5"W) 316 STAINLESS STEEL. MOUNT TO SIDE OF ENCLOSURE.

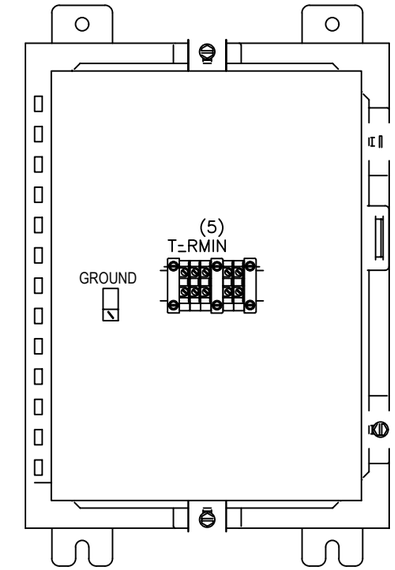

INSTR. & CONTR. TERMINAL BOX BACK PANEL LAYOUT

(OUTER DOOR SHOWN REMOVED FOR CLARITY)

JUNCTION BOX ENCLOSURE:
SCHAEFER'S ELECTRICAL ENCLOSURES
SPN4SS6-16128 (16"H X 12"W X 8"D) NEMA 4X RATED, FABRICATED FROM 14 GA. TYPE 316 STAINLESS STEEL. STAINLESS STEEL DOOR CLAMPS AND HASP & STAPLE PADLOCKING PROVISION PROVIDED.

JUNCTION BOX BACK PANEL:
SPP-1612 (13H" x 9W") FABRICATED FROM 12 GA. CARBON STEEL, FINISHED IN WHITE POLYESTER POWDER COAT.

JUNCTION BOX LOUVER PLATE KIT:
SP-VKSS644 (5.62"H X 5.5"W) 316 STAINLESS STEEL. MOUNT TO SIDE OF ENCLOSURE.

ROMAN D. KORCHAK, P.E. #42626
ELECTRICAL SECTION HEAD
WASTEWATER DEPARTMENT

No.	DATE	REVISIONS
3		
2		
1		

DES: RK
DRN: RK
CKD:
DATE: 10/29/18

CITY of TAMPA
WASTEWATER DEPARTMENT

MARINER ST. PUMPING STATION
TERMINAL BOXES

W.O. 0000
SHEET
E5

KEYED NOTES

1. ELECTRICAL UTILITY METER SOCKET. RINGLESS ALUMINUM, WITH BYPASS LEVER, 600VAC, 125 AMPS. MILBANK UAP3506-XL-TG-HSP.

2. NEMA 4X , FUSIBLE , DOUBLE THROW SERVICE DISCONNECT, 240VAC, 3-POLE, 100A STAINLESS STEEL ENCLOSURE. EATON DT323FWK WITH DT100 NK NEUTRAL KIT, DS100 GK GROUND KIT AND (2) DS36FK "R" FUSE ADAPTOR KITS. PROVIDE AND INSTALL (6) EDISON # ECNR100 CLASS RK5 DUAL-ELEMENT, TIME DELAY FUSES. THREE SPARE FUSES OF THE SAME TYPE AND RATING SHALL BE PROVIDED AS SPARES.

3. PUMP CONTROL PANEL.

4. EMERGENCY POWER CONNECTOR. CROUSE-HINDS ARKTITE 600V, 100A, 3-PH, 4-WIRE WITH BACK BOX ANGLE ADAPTER 1-1/2" HUB, REVERSED CONTACTS, AND SPRING COVER. PART NUMBER AREA10415-S22.

5. PUMP #1 PUMP MOTOR TERMINAL BOX. (WET WELL ISOLATION- SEE SHEET E5).

6. PUMP #2 PUMP MOTOR TERMINAL BOX. (WET WELL ISOLATION SEE SHEET E5).

7. INSTRUMENTATION & CONTROL TERMINAL BOX. (WET WELL ISOLATION SEE SHEET E5).

8. ELECTRIC UTILITY SUPPLY PHASE MONITOR IN NEMA 4X S.S. ENCLOSURE (SEE SHEET E7).

9. PROVIDE AND INSTALL 4" SQUARE ALUMINUM POST WITH 1/2" WALL THICKNESS, FINISHED IN WHITE POLYESTER POWDER COAT. WELD 1/4" CAP TO TOP OF EACH POST. PROVIDE GALVANIC ISOLATION BETWEEN ALUMINUM SURFACES AND SOIL, CONCRETE OR OTHER INCOMPATIBLE MATERIALS.

10. PROVDE AND INSTALL 1-5/8" X 1-5/8" 316 STAINLESS STEEL UNISTRUT. ALL MOUNTING HARDWARE SHALL BE 316 STAINLESS STEEL. UNISTRUT BOLTS SHALL BE INSTALLED THROUGH POST.

11. EXISTING SCADA RTU SHALL BE CAREFULLY REMOVED FROM THE ORIGINAL LOCATION SHOWN ON DRAWING SHEET 7 (DEMOLITION DETAIL) AND INSTALLED AS SHOWN HERE. RECONNECT THE RTU AS SHOWN ON SUBSEQUENT ELECTRICAL DRAWINGS.

12. PROVIDE AND INSTALL (3) #3 AWG XHHW & (1) #4 GND IN 2" CONDUIT TO PROPOSED TECO HANDHOLE.

13. PROVIDE AND INSTALL #4 AWG GROUNDING CONDUCTOR IN 3/4" SCH. 80 PVC CONDUIT. TWO GROUND RODS AND ACCESS WELLS (WITH MINIMUM SPACING OF 6 FEET) SHALL BE PROVIDED AND INSTALLED AS SHOWN ON SHEETS E1 & E2 & E7, AND AS SPECIFIED.

14. PROVIDE AND INSTALL 2" PVC COATED RIGID ALUMINUM CONDUIT TO WET WELL FOR MANUFACTURER SUPPLIED CONDUCTORS FOR FLOAT SWITCH AND WET WELL LEVEL TRANSDUCER.

15. PROVIDE AND INSTALL 2" PVC COATED RIGID ALUMINUM CONDUIT TO WET WELL FOR MANUFACTURER SUPPLIED PUMP #1 MOTOR CONDUCTORS.

16. PROVIDE AND INSTALL 2" PVC COATED RIGID ALUMINUM CONDUIT TO WET WELL FOR MANUFACTURER SUPPLIED PUMP #2 MOTOR CONDUCTORS.

17. PROVIDE AND INSTALL (3) #14 AWG, (1) #14 GND AND (1) 3/C-#16 TWISTED SHIELDED CABLE IN 1" CONDUIT FOR FLOAT SWITCH AND WET WELL LEVEL TRANSDUCER.

18. PROVIDE AND INSTALL (3) #10 XHHW , (1) #12 GND, AND (2) #12 AWG (STATOR TEMP.) IN 3/4" CONDUIT FOR PUMP MOTOR #2.

19. PROVIDE AND INSTALL (3) #10 XHHW , (1) #12 GND, AND (2) #12 AWG (STATOR TEMP.) IN 3/4" CONDUIT FOR PUMP MOTOR #1.

20. ALUMINUM MYERS HUB (TYP.).

21. ALUMINUM 3-PIECE CONDUIT UNION (TYP.).

22. ALUMINUM EYS TYPE CONDUIT SEAL WITH CHICO COMPOUND (TYP.).

23. GROUND ACCESS WELL, FOR DETAILS SE SHEET E7.

24. PROVIDE WET WELL PENETRATIONS, AS NECESSARY, TO INSTALL PROPOSED CONDUITS. INSTALLATION SHALL FOLLOW GUIDELINES PROVIDED IN THE CIVIL / MECHANICAL DOCUMENTS. EXISTING CONDUITS NO LONGER REQUIRED SHALL BE REMOVED AND THE OPENINGS PATCHED AS SPECIFIED.

25. PROVIDE AND INSTALL (1) #14 AWG H, (1) #14 AWG N, AND (1) #14 GND IN 3/4" CONDUIT, FOR RTU POWER, EXTENDING FROM PCP TO SCADA RTU.

26. PROVIDE AND INSTALL (1) 2-COND. #16AWG T.P. SHLD- BELDEN #8719, (14) #16 AWG MTW & (1) #16 AWG BONDING CONDUCTOR IN 1" CONDUIT, FOR 24VDC I/O, EXTENDING FROM PCP TO SCADA RTU.

ROMAN D. KORCHAK, P.E. #42626
ELECTRICAL SECTION HEAD
WASTEWATER DEPARTMENT

No.	DATE	REVISIONS
3		
2		
1		

DES: RK
DRN: RK
CKD:
DATE:3/04/19

CITY of TAMPA
WASTEWATER DEPARTMENT

MARINER ST. PUMPING STATION
KEYED NOTES FOR EI-E5

W.O. 0000
SHEET
E6

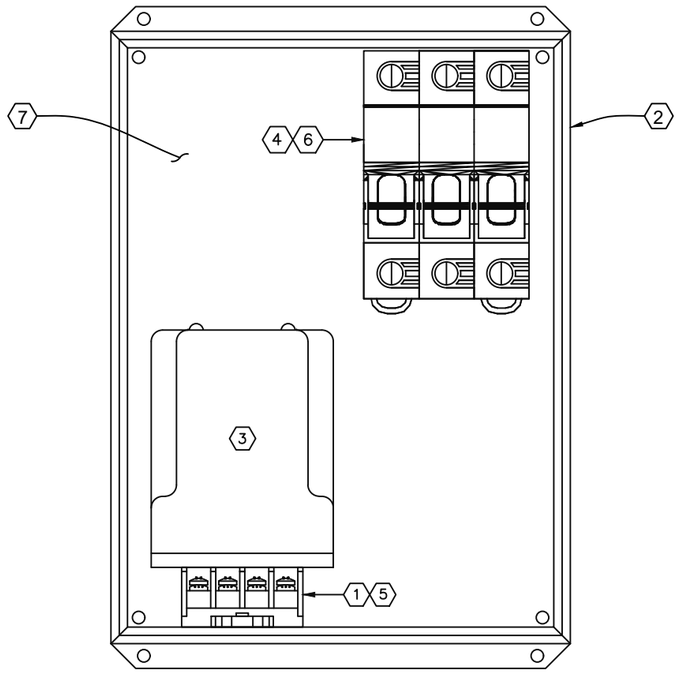

FRONT VIEW- DOOR REMOVED (SCALE= 1:2)

PM1 J.B. KEYED NOTES:

1. 8 PIN OCTAL SOCKET, DIN RAIL MOUNTED, DIVERSIFIED ELECTRONICS OT-08
2. NEMA 4X STAINLESS STEEL, 8"x 6"x 3.5" ENCLOSURE, HAMMOND MANUF'G EJ863516
3. 3-PHASE POWER MONITOR, PM1 DIVERSIFIED ELECTRONICS SUA-230-ALA
4. FUSE BLOCK/DISCONNECT, FDB1, ALLEN BRADLEY 1492-FB3C30
5. MOUNTED TO BOTTOM OF ENCLOSURE
6. DIRECTLY MOUNTED TO BACK OF ENCLOSURE
7. BACK OF ENCLOSURE

PM1 JUNCTION BOX DETAIL

SCALE: 1/4"= 1'-0"

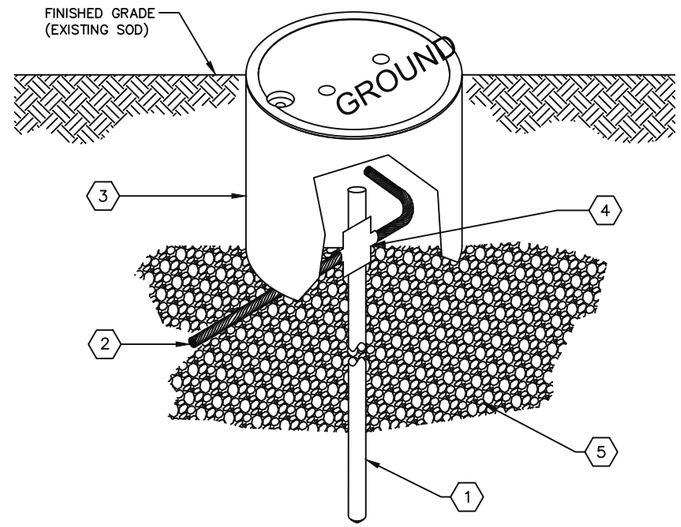

GROUND TEST WELL DETAIL KEYED NOTES:

1. NEW GROUND ROD, STAINLESS STEEL, 5/8" X 10'-0" (TYP).
2. #4 BARE STRANDED COPPER GROUNDING ELECTRODE CONDUCTOR (TYP).
3. PROVIDE AND INSTALL OLDCASTLE PRECAST ENCLOSURE SOLUTIONS #F08 BOX WITH #F08C CAST IRON LID MARKED "GROUND".
4. EXOTHERMIC WELD.
5. PROVIDE 6" MINIMUM OF CRUSHED STONE.

GROUNDING TEST WELL DETAIL

SCALE: N.T.S.

NOTE:S

1. ENCLOSURE FRONT DOOR IS REMOVED FOR CLARITY.
2. PROVIDE RED LAMICOID PLACARD WITH WHITE 1/4" LETTERING ON ENCLOSURE DOOR. THE PLACARD SHALL READ:
"WARNING- OPENING FUSED DOUBLE THROW SWITCH DOES NOT DE-ENEGIZE VOLTAGE TO THIS ENCLOSURE"

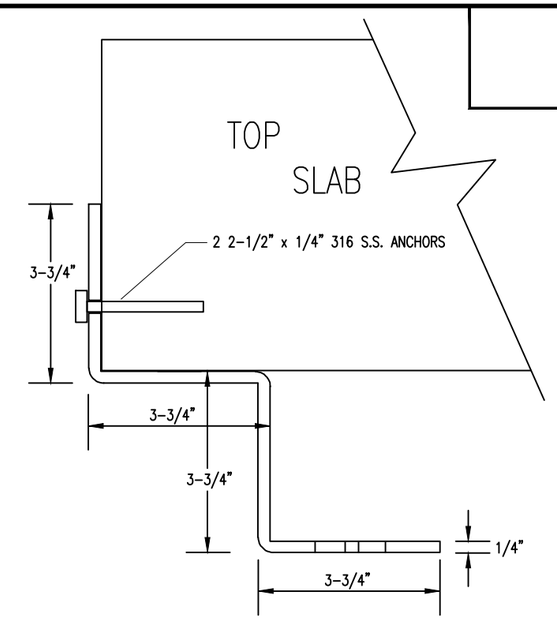

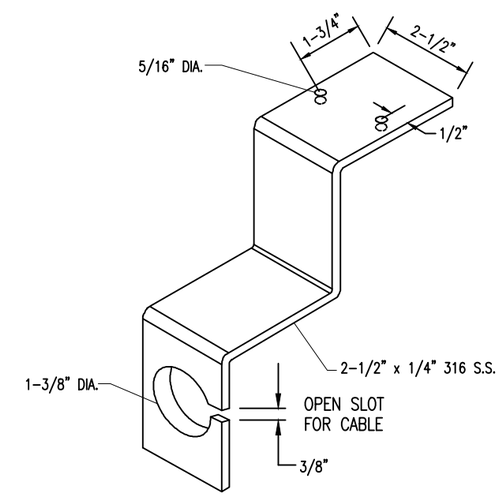

NOTE:

ROUND OVER ALL EDGES,
RADIUS ALL CORNERS

PULSAR DB10
MOUNTING BRACKET DETAIL

SCALE: N.T.S.

ROMAN D. KORCHAK, P.E. #42626
ELECTRICAL SECTION HEAD
WASTEWATER DEPARTMENT

No.	DATE	REVISIONS
3		
2		
1		

DES: RK
DRN: RK
CKD:
DATE: 11/20/18

CITY of TAMPA
WASTEWATER DEPARTMENT

MARINER ST. PUMPING STATION
ELECTRICAL DETAILS

W.O. 0000
SHEET
E7

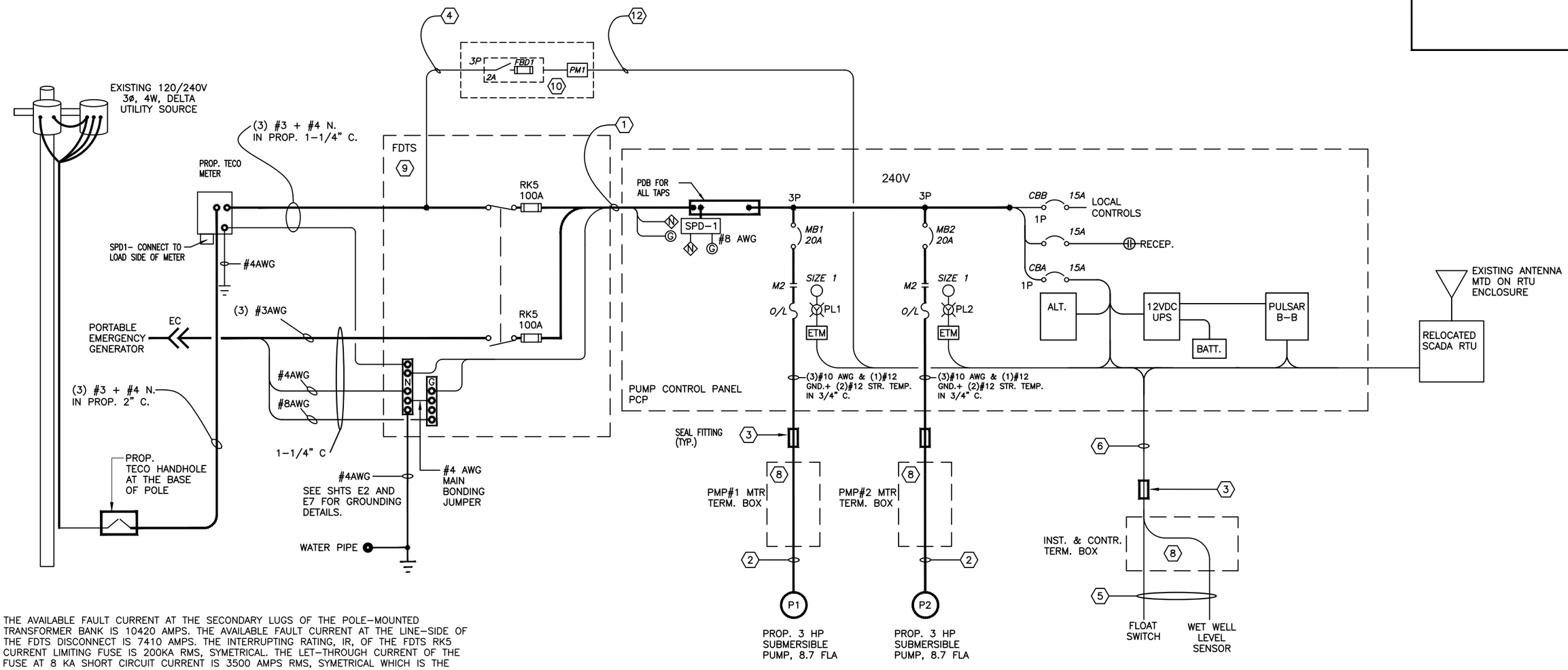

THE AVAILABLE FAULT CURRENT AT THE SECONDARY LUGS OF THE POLE-MOUNTED TRANSFORMER BANK IS 10420 AMPS. THE AVAILABLE FAULT CURRENT AT THE LINE-SIDE OF THE FDTS DISCONNECT IS 7410 AMPS. THE INTERRUPTING RATING, IR, OF THE FDTS RK5 CURRENT LIMITING FUSE IS 200KA RMS, SYMETRICAL. THE LET-THROUGH CURRENT OF THE FUSE AT 8 KA SHORT CIRCUIT CURRENT IS 3500 AMPS RMS, SYMETRICAL WHICH IS THE FAULT CURRENT AT THE PUMP CONTROL PANEL (PCP).

ONE LINE DIAGRAM NOTES:

1. PROVIDE AND INSTALL 3-#3 + 1-#4 NEUTRAL + 1-#8 GND IN 1-1/4" CONDUIT, POWER CONDUCTORS SHALL BE XHHW-2 (TYP.).
2. PROPOSED SUBMERSIBLE PUMP POWER CABLE (BY PUMP MANUFACTURER) IN PROPOSED 2" CONDUIT.
3. PROVIDE COPPER-FREE ALUMINUM CONDUIT SEALING FITTING, CROUSE-HINDS TYPE EYS.
4. PROVIDE AND INSTALL 3-#12 + 1-#12 GND. IN 3/4" CONDUIT, REFER TO DETAILS ON SHEET EX.
5. PROVIDE 2" CONDUIT FROM NEW PUMP CONTROL CABINET TO WET WELL FOR FLOAT SWITCH AND LEVEL SENSOR CABLES.
6. PROVIDE AND INSTALL (3)-#14 XHHW-2, (1) XHHW-2 GND AND (1) 3/C-#16 TWISTED SHIELDED CABLE IN 1"C FOR FLOAT AND LEVEL TRANSMITTER.
7. RESERVED
8. SEE DETAILS ON SHEET E5.
9. SERVICE ENTRANCE RATED, FUSED DOUBLE THROW SWITCH.
10. PM1 JUNCTION BOX, SEE SHEETS EX AND EX FOR DETAILS.
11. RESERVED
12. PROVIDE AND INSTALL 2-#14 + 1-#14 GND. IN 3/4" CONDUIT, REFER TO DETAILS ON SHEET EX.

ROMAN D. KORCHAK, P.E. #42626
ELECTRICAL SECTION HEAD
WASTEWATER DEPARTMENT

No.	DATE	REVISIONS
3		
2		
1		

DES: RK
DRN: RK
CKD:
DATE:3/11/19

CITY of TAMPA
WASTEWATER DEPARTMENT

MARINER ST. PUMPING STATION
ELECTRICAL ONELINE DIAGRAM

W.O. 0000
SHEET
E8

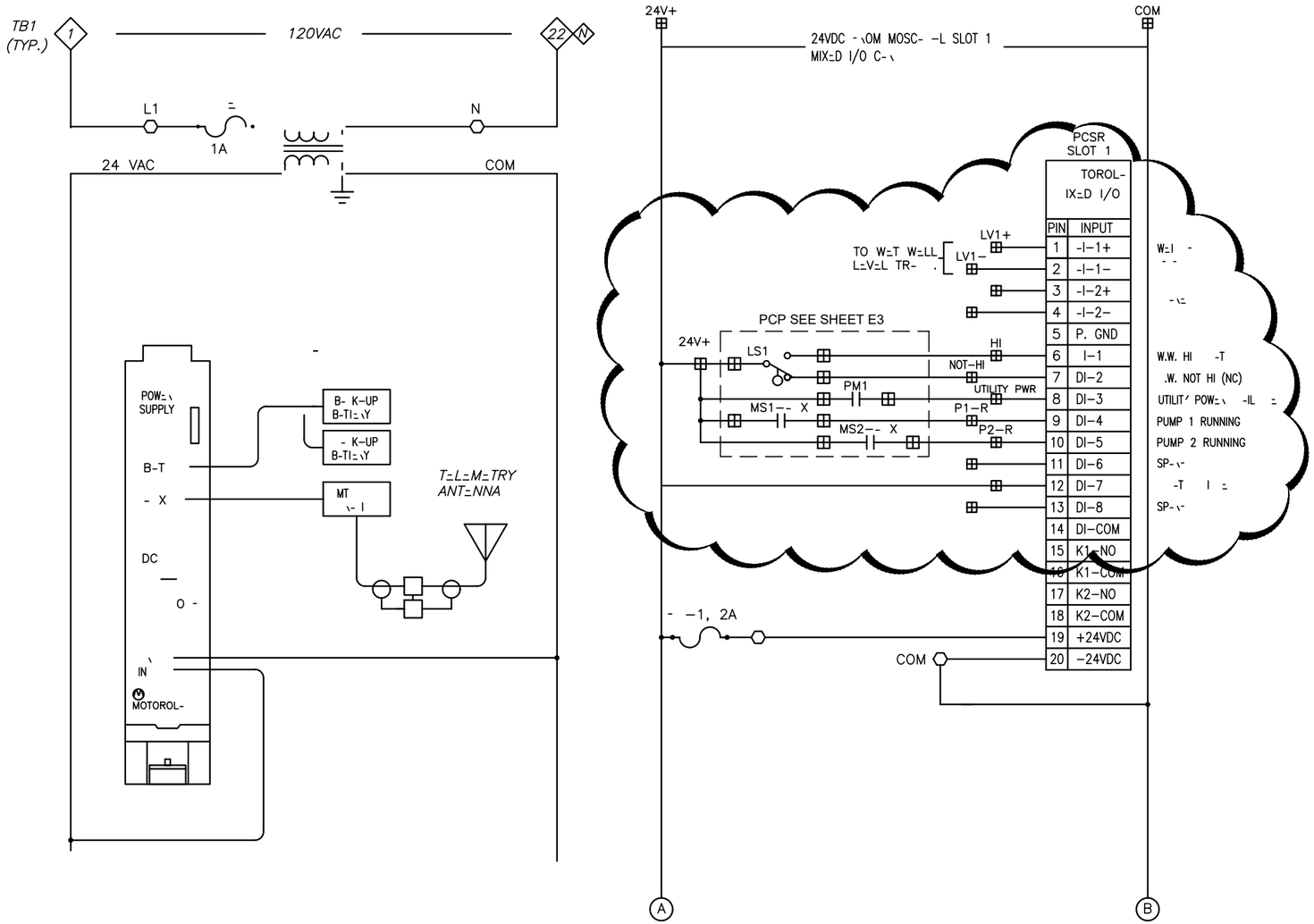

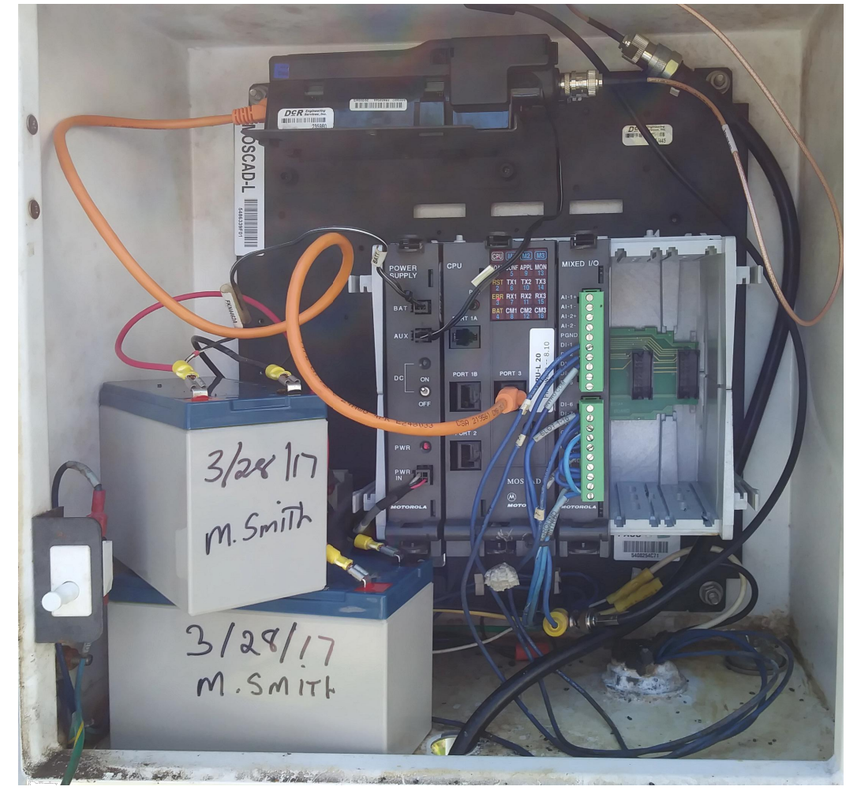

SCADA MODIFICATIONS

CLOUDED AREA SHOWS
PROPOSED CONNECTIONS.

EXISTING SCADA RTU INTERIOR

USE STAINLESS STEEL PLUGS FOR
OPENINGS THAT ARE NOT REUSED.

⊞ T=RMIN - I/O

⊞ T=RMIN- IN PUMP CONTROL P =

ROMAN D. KORCHAK, P.E. #42626
ELECTRICAL SECTION HEAD
WASTEWATER DEPARTMENT

No.	DATE	REVISIONS
3		
2		
1		

DES: RK
DRN: RK
CKD:
DATE:3/15/19

CITY of TAMPA
WASTEWATER DEPARTMENT

MARINER ST. PUMPING STATION
ELECTRICAL
SCADA RTU MODIFICATIONS

W.O. 0000
SHEET
E9