Code Change

ORDINANCE NO. 2017-103

AN ORDINANCE OF THE CITY OF TAMPA, FLORIDA, **RELATING TO COMPREHENSIVE CHANGES TO SIGN REGULATIONS,** MAKING REVISIONS TO CITY OF TAMPA CODE OF ORDINANCES, CHAPTER 27 (ZONING AND LAND DEVELOPMENT); AMENDING SECTION 27-43, DEFINITIONS; AMENDING SECTION 27-236, SOUTH HOWARD COMMERCIAL OVERLAY DISTRICT DEVELOPMENT DESIGN STANDARDS; AMENDING SECTION 27-237, NEW TAMPA OVERLAY DISTRICT DEVELOPMENT STANDARDS; AMENDING SECTION 27-238, WESTSHORE OVERLAY DISTRICT DEVELOPMENT STANDARDS; AMENDING SECTION 27-240, EAST TAMPA OVERLAY DISTRICT DESIGN STANDARDS; AMENDING SECTION 27-241, WEST TAMPA OVERLAY DISTRICT DEVELOPMENT DESIGN STANDARDS; AMENDING SECTION 27-243, KENNEDY BOULEVARD CORRIDOR DISTRICT DEVELOPMENT DESIGN STANDARDS; REPEALING AND REPLACING ARTICLE VI, SUPPLEMENTAL REGULATIONS, DIVISION 6. SIGNS; REPEALING ALL ORDINANCES OR PARTS OF ORDINANCES IN CONFLICT THEREWITH; PROVIDING FOR SEVERABILITY; PROVIDING AN EFFECTIVE DATE.

WHEREAS, the City Council of the City of Tampa directed the Planning and Development Department to complete the following amendment to Chapter 27, Code of Ordinances; and,

WHEREAS, the City Council initiated this text amendment, outside of the normal text amendment cycle, to correct unintentional errors and conflicts in Chapter 27, Code of Ordinances, due to changes in federal law; and,

WHEREAS, the Hillsborough County City-County Planning Commission conducted a public hearing on this ordinance and made a finding that it is consistent with the Tampa Comprehensive Plan; and,

WHEREAS, the City Council of the City of Tampa has determined that the following amendment promotes and protects the general health, safety and welfare of the residents of the City of Tampa; and,

WHEREAS, duly noticed public hearings as required by law were held by the City Council of the City of Tampa, at which public hearings all residents and interested persons were given an opportunity to be heard.

NOW, THEREFORE,

BE IT ORDAINED BY THE CITY COUNCIL

E2017-8CH27

OF THE CITY OF TAMPA, FLORIDA:

Section 1. That **"Sec. 27-43. Definitions."** is hereby amended by adding the underlined language and deleting the stricken language as follows:

"Sec. 27-43. Definitions.

...*Abandoned sign*: Any sign which:

(1) Through age and/or obsolescence no longer conforms to structural or maintenance specifications of this chapter; or

(2) Any pole, pylon or structure, ~~expressly~~ installed for the purpose of affixing a sign, that bears no sign or copy for a period of three (3) consecutive months; or

(3) ~~Displays information which incorrectly identifies the business, owner, lessor or principal activity conducted on the site~~ Is located on a parcel or affixed to a building that has not been in use for a period of six (6) consecutive months; or

(4) After February 1, 2003, and subject to any notice and curative provisions contained in this Code, any billboard sign for which a current operating permit does not exist.

...*Activated sign*: Any sign which contains or uses for illumination any light, lighting device or lights which change color, flash or alternate, or change appearance of said sign or any part thereof automatically, except electronic message signs. Any sign which contains moving parts as part of its normal operation, or which depicts or contains copy which moves or appears to be moving, except revolving signs, shall be considered an activated sign. ~~Additionally, a sign which depicts or contains copy which moves or appears to be moving.~~

...*Alter*: This term shall include, but not be limited to, the addition of sign surface area, the changing or relocation of light source, or the relocation of an ~~outdoor advertising display~~ offsite or billboard sign from one (1) position to another. This term shall include any and all structural changes in the sign, but shall not include the changing of copy on a sign which is designed as a changeable copy sign.

...*Billboard signs*: ~~A billboard sign is any~~ Any freestanding off-site sign, including without limitation a changeable copy sign, that is erected on a parcel which identifies or advertises a use, establishment, product, activity or service not sold, produced, manufactured, located, provided or furnished on the parcel on which the sign is located (or identifies a use, product, activity or service which is only incidentally sold or available on that parcel).

...~~*Construction sign*: Any sign giving the names of principal contractors, architects and lending institutions responsible for construction on the site where the sign is placed, together with other information included thereon.~~

...~~*Directional signs*: Any sign which is used principally for the purpose of indicating the direction or location of any object, place or area including, but not limited to, those signs which indicate the avenues of ingress and egress from a particular premise.~~

~~*Directory sign*: A sign having two (2) display surfaces, not necessarily displaying the same copy, which are parallel and back-to-back and not more than forty eight (48) inches apart.~~

...*Feather sign:* A stand-alone temporary sign typically constructed of a single plastic or metal shaft with an attached pennant that is vertically elongated and attached to the shaft to resemble a feather in shape.

...*Flag*: A piece of cloth or similar material, typically oblong or square, attachable by one edge to a pole or rope and designed or intended to be hung from a flagpole by being tethered along one side.

Flagpole: A pole that is utilized for the sole purpose of displaying flags.

...~~*Illegal sign.* An unpermitted sign which was not lawfully erected or a permitted sign not constructed in accordance with the representations set forth in the permit documents or a sign constructed in violation of city codes.~~

...~~*Multiple listing strips*: Strips of wood or like material or paper affixed to, around or upon a real estate sign to indicate that the property being advertised for sale is also advertised within the real estate industry by virtue of their multiple listings service.~~

...*Nonconforming sign*: Any sign lawfully in existence within the City of Tampa on the effective date of Art. VI Div. 6 of this chapter ~~[December 15, 2012]~~ which does not conform to the requirements of this chapter.

...*Off-site sign*. Any sign upon which commercial ~~or noncommercial~~ advertising or any other matter may be displayed, advertising goods, services or other things not sold or available upon the parcel (or zoning lot, if a signage plan is approved for the entire zoning lot) or only incidentally available where the sign is located. Additionally, any sign that is located upon a parcel without another primary structure or building thereon, which structure or building is usable for and has been issued a certificate of occupancy for an establishment or residential use, unless such sign is part of an alternative signage plan; or any sign for which the owner of the sign or the property upon which the sign is situated receives any form of compensation in exchange for displaying copy, or offers to display copy in exchange for any form of compensation.

...*On-site sign*. Any sign upon which commercial or noncommercial advertising or any other matter may be displayed, advertising goods, services or other things sold or available upon the parcel where the sign is located. Any authorized or permitted on-site sign is allowed to contain non-commercial speech in lieu of any other speech.

...~~*Subdivision sign*. Any sign which is designed to identify a subdivision or neighborhood.~~

...*Temporary sign*. ~~A sign intended to be displayed for not more than thirty (30) consecutive days nor more than sixty (60) days per year, unless otherwise stated herein. Included in this category are retailers' signs temporarily displayed for the purpose of informing the public of a sale or "special" offer and banner signs.~~ Any sign that is not designed or not intended to be placed permanently. ..."

Section 2. That **"Sec. 27-236. South Howard Commercial Overlay District Development Design Standards."** is hereby amended by adding the underlined language and deleting the stricken language as follows:

"Sec. 27-236. South Howard Commercial Overlay District Development Design Standards.

...(d) *Compliance.* Every building or site permit application for new construction or major renovation of an existing structure (as defined in section 27-43) within the South Howard Commercial Overlay District shall comply with all applicable Land Development Regulations and the standards set forth in subsections (e) through (m). These are the minimum requirements which must be met in order to obtain design approval. Specific design criteria will also be applied individually where appropriate (e.g. new signs, request for change of location or increase in amount of parking, new lighting, etc.). Alternative design ~~concepts~~ exceptions may be considered by the zoning administrator ~~(and/or his~~ or ~~her~~ designee, for those properties located outside of the Hyde Park Local Historic District, if consistent with the ~~above mentioned~~ stated purpose and intent of this section. Refer to (e) below, regarding review of these decisions.

Properties located in the ~~Local Ordinance~~ Hyde Park Local Historic District must ~~also~~ adhere to overlay district standards and specific design guidelines for the area, and must obtain a Certificate of Appropriateness (CA) from the Architectural Review Commission (ARC) prior to any development or rehabilitation. Requests for variance(s) to the overlay district standards on these properties shall be heard by the ARC, in accordance with the procedures set forth in section 27-114. Refer to (f) below, regarding review of these decisions. Where there is a conflict between the Hyde Park Design Guidelines and the South Howard Commercial Overlay District Development Design Standards, the more restrictive regulations shall apply.

(e) ~~*Variances.* Any property owner in the South Howard Commercial Overlay District seeking a variance from these design standards or from those requirements referenced in section 27-114(a) through (c) shall file this application for variance with the ARC staff administrator in accordance with the procedures set forth in section 27-114~~. *Review – alternative design exception.* Any person aggrieved by a zoning administrator determination, related to an alternative

design exception to this section, is subject to the review method set forth in section 27-61.

(f) ~~*Appeals*~~ *Review – Variance heard by the ARC*. ~~Persons aggrieved by any order, requirement, decision, or determination made by the zoning administrator with regard to these design standards may appeal that order, requirement, decision, or determination by filing a petition to the ARC for an administrative appeal in accordance with section 27-61(a)~~ Any person aggrieved by an ARC decision, related to a variance to this section, is subject to the review method set forth in section 27-61. The ARC shall hold a public hearing to consider testimony or evidence from the public to better understand the purpose and intent of the overlay district and the character of the surrounding neighborhood. …

(l) *General sign standards*. The following sign standards shall apply to new signs in the South Howard Commercial Overlay District, and shall be in addition to the sign regulations set forth in this chapter and in Article VI, Division 6. Where regulations are inconsistent, the provisions of this subsection shall apply and control in the district, subject to the provisions of subsection (m) below. The following provisions are intended to allow the creation of unique and informative signs which give a distinct flavor to the area, while maintaining a non-intrusive, pedestrian environment. These guidelines are not intended to prohibit the design of unusual signs that may enhance the character of the building, or reflect the nature of the business.

(1) Parcels permitted to have more than one (1) wall sign, a specific type of building sign, per section 27-289.3(b)(6)~~12(c)~~. Regulations for wall signs may not have those wall signs abutting at the corner of a building. A minimum separation of ten (10) feet shall be required between such signs. A minimum separation of four (4) feet shall be maintained between signs on the same façade. …"

Section 3. That **"Sec. 27-237. New Tampa Commercial Overlay District Development Standards."** is hereby amended by adding the underlined language and deleting the stricken language as follows:

"Sec. 27-237. New Tampa Commercial Overlay District Development Standards.

…(d) *Compliance*. Every application for new construction or major renovations of commercial or multi-family residential projects, as defined in Chapter 27, shall comply with all applicable standards set forth in subsections (e) through (k), as well as those outlined in the adopted site plan and performance standards for the community in which the proposed development is located. In cases of conflict, the more restrictive standard(s) shall apply. ~~Alternative concepts to those standards set forth in subsections (e) through (j) may be considered by the zoning administrator if consistent with the above mentioned purpose and intent. Any person aggrieved by any order, requirement, decision, or determination of the~~

~~zoning administrator with regard to these design standards may appeal that order, requirement, decision, or determination by filing a petition with the VRB for an administrative appeal in accordance with section 27-61(a). The VRB shall hold a public hearing to consider testimony or evidence from the public to better understand the purpose and intent of the overlay district and the character of the surrounding neighborhood. The VRB shall make the final determination as to whether the proposal is consistent with the development standards of this section and with the above stated purpose and intent.~~ Alternative design exceptions to these Overlay District standards may be considered and approved by the zoning administrator or designee, if consistent with the stated purpose and intent of this section, subject to the procedures set forth in section 27-60. A zoning administrator determination, related to an alternative design exception to this section, is subject to the review method set forth in section 27-61. ...

(h) *General sign standards*. The following sign standards shall apply to new buildings or structures and major renovations, as defined in Chapter 27, and shall be in addition to the sign regulations set forth in Article VI, Division 6, and 27. Where regulations are inconsistent, the provisions of this subsection shall apply and control in the district. The following provisions are intended to establish a coordinated graphic program that provides for occupant identification and directional communication, while allowing the creation of unique and informative signs. These guidelines are not intended to prohibit the design of unusual signs that may enhance the character of the building, or reflect the nature of the business.

(1) Billboards and/or off-site signs are prohibited. ~~Only signs advertising the business conducted, services rendered, or goods sold on the site upon which the sign is erected will be permitted.~~ ...

(6) If a multiple occupancy parcel is entitled to more than one (1) ground sign (a type of freestanding sign), ~~per~~ pursuant to section 27-289.3(b)(5)~~12(c)~~, then all allowable ground signs may be combined into a single ground sign not to exceed two hundred ten (210) square feet per sign face, or a maximum of four hundred twenty (420) square feet for a double faced sign. Such ground signs are limited to a maximum of twenty (20) feet in height. ...

(9) One (1) double-faced or two (2) single-faced on-site ~~identification~~ freestanding signs may be located at each entrance to a platted subdivision or multi-family residential development, subject to all other provisions of section 27-289.3(b)~~12(b)~~. The two (2) single-spaced signs must be located on opposite sides of the entrance drive. Interior illumination (i.e. "backlighting") of such residential signs is prohibited. ..."

Section 4. That **"Sec. 27-238. Westshore Overlay District Development Standards."** is hereby amended by adding the underlined language and deleting the stricken language as follows:

"Sec. 27-238. Westshore Overlay District Development Standards.

...(g)

...(7) General sign standards. The following standards shall apply to new signs. The following provisions are intended to establish a distinct character for the Overlay District by creating an appealing environment, reduce distractions to motorists and pedestrians and reduce visual blight.

a. ...

1. Billboards~~,~~ and off-site signs are prohibited. ~~Only signs that advertise the business conducted, services rendered, occupant names/symbols, or primary goods sold on the site upon which the sign is erected will be permitted.~~ Signs vested under previous agreements between the City of Tampa and the sign owner will not be affected by this district.

2. No sign on a parcel adjacent to or within three hundred (300) feet of a residence shall be illuminated from 11:00 p.m. to 7:00 a.m., except where the ~~premises that the sign advertises~~ use conducted on the premises is open for business, or unless the sign illumination is wholly shielded from the residential uses in all directions, by a non-residential building. At no time shall the light from a sign be directed towards a residence. ...

9. Multi-family residential dwelling ~~identification~~ freestanding signs must comply with section 27-289.3(b)~~12(b)~~, and shall not exceed fifteen (15) feet in height. ..."

Section 5. That **"Sec. 27-240. East Tampa Overlay District Design Standards."** is hereby amended by adding the underlined language and deleting the stricken language as follows:

"Sec. 27-240. East Tampa Overlay District Design Standards.

...(c) *Compliance.* Each application for new construction or major renovation, as defined in Chapter 27, City of Tampa Code of Ordinances, and/or any development undergoing a change of use/increase of intensity review, shall comply with all applicable overlay district and underlying zoning district standards and, if applicable, those specific standards outlined in the city council approved site plan. In cases of conflict, the more restrictive standard(s) shall apply. These are the minimum requirements that must be met in order to obtain design approval. ~~Each application for residential or non-residential project which~~

~~requires approval by the city council or the variance review board, through the public hearing process, is required to be submitted for review by the East Tampa Community Revitalization Partnership (CRP). A copy of the application, including a site plan, shall be required to be filed with the East Tampa CRP as part of the application submittal requirement.~~

~~Alternative design concepts that allow for sustainable development, as defined in section 27-43, may be considered and approved by the zoning administrator (and/or designee) if consistent with the above stated purpose and intent. Any person aggrieved by any order, requirement, decision, or determination of the zoning administrator may be considered and approved by the zoning administrator (and/or designee) if consistent with the above stated purpose and intent. Any person aggrieved by any order, requirement, decision, or determination of the zoning administrator with regard to these design standards may appeal that order, requirement, decision, or determination by filing a petition with the variance review board for an administrative appeal in accordance with section 27-61(a). The variance review board shall hold a public hearing and is not limited in its review to those matters reviewed by the zoning administrator, but may consider testimony or evidence from the applicant, the city staff and the public to better understand the purpose and intent of the overlay district and the character of the surrounding neighborhood. The variance review board shall make final determination as to whether the alternative design concept is consistent with the development standards of this section and with the above stated purpose and intent.~~ Alternative design exceptions to these Overlay District standards may be considered and approved by the zoning administrator or designee, if consistent with the stated purpose and intent of this section, subject to the procedures set forth in section 27-60. A zoning administrator determination, related to an alternative design exception to this section, is subject to the review method set forth in section 27-61. …

(h) General sign standards. The following sign standards shall apply to new signs

(1) Billboards and/or off-site signs are prohibited. ~~Only signs that advertise the business conducted, services rendered, occupant names/symbols, or primary goods sold on the site upon which the sign is erected will be permitted.~~

(2) No sign on a parcel adjacent to or within one hundred (100) feet of a residence shall be illuminated from 11:00 p.m. to 7:00 a.m., except where the ~~premise that the sign advertises~~ use conducted on the premises is open for business, or unless the sign illumination is wholly shielded from the residential uses in all directions, by a non-residential building. At no time shall the light from a sign be directed towards a residence. …"

Section 6. That **"Sec. 27-241. West Tampa Overlay District Development Design Standards."** is hereby amended by adding the underlined language and deleting the stricken language as follows:

"Sec. 27-241. West Tampa Overlay District Development Design Standards.

...(c) *Compliance.* Each application for new construction or major renovation, as defined in Chapter 27, City of Tampa Code of Ordinances, and/or any development ~~underground~~ undergoing a change of use/increase of intensity review, shall comply with all applicable overlay district and underlying zoning district standards and, if applicable, those specific standards outlined in the city council approved site plan. In cases of conflict, the more restrictive standard(s) shall apply. These are the minimum requirements that must be met in order to obtain design approval.

~~Alternative design concepts may be considered and approved by the zoning administrator (and/or designee) if consistent with the above stated purpose and intent. Any person aggrieved by any order, requirement, decision, or determination of the zoning administrator with regard to these design standards may appeal that order, requirement, decision, or determination by filing a petition with the VRB for an administrative appeal in accordance with section 27-61(a). The VRB shall hold a public hearing to better understand the purpose and intent of the overlay district and the character of the surrounding neighborhood. The VRB shall make the final determination as to whether the alternative design concept is consistent with the development standards of this section and with the above stated purpose and intent.~~ Alternative design exceptions to these Overlay District standards may be considered and approved by the zoning administrator or designee, if consistent with the stated purpose and intent of this section, subject to the procedures set forth in section 27-60. A zoning administrator determination, related to an alternative design exception to this section, is subject to the review method set forth in section 27-61.

~~(d) *Variances.* Any owner of property located within the boundaries of the West Tampa Overlay District seeking a variance from the dimensional requirements established in this section shall file an application for variance with the variance review board (VRB) staff administrator in accordance with the procedures set forth in Chapter 27, Article II, Division 3, City of Tampa Code of Ordinances.~~

(~~e~~d) *Review procedures....*

(~~f~~e) General building standards.

(1) Commercial properties. ...

e.

...4. Billboards and/or off-site signs, as defined in ~~Article VI, Division 6, City of Tampa Code of Ordinances,~~ section 27-43

are prohibited. Only on-site signs, as defined in ~~Article VI, Division 6, City of Tampa Code of Ordinances~~ section 27-43, will be permitted.

(~~g~~f) *Encroachments….*

(~~h~~g) *Transit stops. …*

(~~i~~h) *Curb cuts/access management….*"

Section 7. That **"Sec. 27-243. Kennedy Boulevard Corridor District Development Design Standards."** is hereby amended by adding the underlined language and deleting the stricken language as follows:

"Sec. 27-243. Kennedy Boulevard Corridor District Development Design Standards.

…(c) *Compliance.* Each application for new construction and/or major renovation as defined in Chapter 27, City of Tampa Code of Ordinances, shall comply with all applicable overlay district and underlying zoning district standards and, if applicable, those specific standards outlined in the city council approved site plan. In cases of conflict, the more restrictive standard(s) shall apply. These are the minimum requirements that must be met in order to obtain design approval for non-residential or mixed-use projects. Please note that additional compliance standards may be stated within this document, which further restrict the permitting and/or construction process for various site elements.

~~Alternative design concepts may be considered and approved by the zoning administrator or designee, only if consistent with the stated purpose and intent. If denied, an applicant shall file an application for a site plan controlled zoning district with the land development coordination office, in accordance with the procedures set forth in this chapter. The city council shall then make the determination as to whether the alternative design concept is consistent with the development standards of this section and with the above stated purpose and intent.~~ Alternative design exceptions to these Overlay District standards may be considered and approved by the zoning administrator or designee, if consistent with the stated purpose and intent of this section, subject to the procedures set forth in section 27-60. A zoning administrator determination, related to an alternative design exception to this section, is subject to the review method set forth in section 27-61. …

(e) Design Standards (Building and Site Standards). …

(7) General sign standards.

a. …

1. Freestanding sign standards. …

~~iv~~v. Billboards and/or off-site signs, as defined in ~~Article VI, Division 6, City of Tampa Code of Ordinances,~~ section 27-43 are prohibited. Only on-site signs, as defined in ~~Article VI, Division 6, City of Tampa Code of Ordinances~~ section 27-43, will be permitted. …

Section 8. That **"Article VI. Supplemental Regulations, Division 6. Signs."** is hereby repealed in its entirety and replaced with the language set forth in "Exhibit A".

Section 9. That should a court of competent jurisdiction declare any part of this Ordinance invalid the remaining parts hereof shall not, in any way, be affected by such determination as to the invalid part.

Section 10. That all ordinances or parts of ordinances in conflict herewith are hereby repealed to the extent of any conflict.

Section 11. That this ordinance shall take effect on July 1, 2017.

PASSED AND ORDAINED BY THE CITY COUNCIL OF THE CITY OF TAMPA, FLORIDA, ON JUN 2 2 2017.

ATTEST:

Yvonne G. Capin
CHAIRMAN/~~CHAIRMAN PRO-TEM~~
CITY COUNCIL

Shirley Foxx-Knowles
CITY CLERK/~~DEPUTY CITY CLERK~~

APPROVED BY ME ON JUN 2 7 2017

Bob Buckhorn
BOB BUCKHORN, MAYOR

APPROVED AS TO LEGAL
SUFFICIENCY BY:

E/S
KRISTIN MORA
ASSISTANT CITY ATTORNEY

"EXHIBIT A"

Article VI. Supplemental Standards.

Division 6. Signs

Sec. 27-289. – Purpose.

(a) The purpose and intent of this chapter is to establish a set of standards for the fabrication, erection, use, maintenance and alteration of signs, symbols, markings or advertising devices within the city. These standards are designed to protect and promote the health, safety and welfare of persons within the city by providing regulations which allow and encourage creativity, effectiveness and flexibility in the design and use of such devices while promoting traffic safety and avoiding an environment that encourages visual blight. The safety of all citizens is affected by the ability of emergency responders to quickly and easily identify locations through appropriate signage, and the size and location of signs may, if uncontrolled, constitute an obstacle to effective emergency response as well as fire-fighting techniques. Further, the safety of motorists, cyclists, pedestrians, and other users of the public streets is affected by the number, size, location, lighting, and movement of signs that divert the attention of drivers. Uncontrolled and unlimited signs may also degrade the aesthetic attractiveness of the natural and manmade attributes of the community and thereby undermine the economic value of tourism, visitation, and permanent economic growth.

(b) It is not the purpose of this division to regulate or control the copy or the content of signs. It is not the intent of this chapter to afford greater protection to either commercial or noncommercial speech. Any sign, display, or device allowed under this chapter may contain, in lieu of any other copy, any otherwise lawful noncommercial message that does not direct attention to a business operated for profit, or to a commodity or service for sale, and that complies with all other requirements of this chapter.

(c) This division is intended to be consistent with the Tampa Comprehensive Plan.

Sec. 27-289.1. – Short title.

This division shall be referred to and cited as the "City of Tampa Sign Code."

Sec. 27-289.2. – Permits required; fees and process.

(a) *Permit required for signs.* A sign shall not be erected, demolished, altered, rebuilt, enlarged, extended, relocated, attached to, suspended from, or supported by a building or structure unless a permit for the same has been issued in accordance with chapter 5, unless the sign is specifically exempted from permit procedures set forth in this division.

"EXHIBIT A"

(b) *Who may obtain sign permits.* Licensed general, building, residential, or sign contractor, or authorized agent(s), in accordance with chapter 5, may obtain sign permits.

(c) *When required.*

(1) Sign permits are required as set forth in section 27-289.3.

(2) Any repair work on a sign affecting the structural integrity of the load bearing elements shall require a permit. Simple, nonstructural maintenance of a sign does not require a permit.

(3) Repairs to a sign may be conducted prior to obtaining a permit in the event of an emergency imposing an imminent threat to life or property. Provided, however, that any necessary permit is obtained on the first city working day thereafter. Emergency repairs shall be limited to returning the sign to its original permitted state.

(4) A permit is not required to change or replace the advertising copy, message or sign face on changeable copy signs. Provided, however, that said change or replacement of advertising copy, message or sign face does not enlarge or increase the sign surface area nor adversely affect the original design integrity. If, in order to change or replace the advertising copy, message, or sign face, the supporting sign structure must be unfastened, loosened, or removed, then and in that case, a sign permit shall be required. Copy cannot be replaced such that the sign changes from an on-site sign to an off-site sign.

(d) The following inspections are required.

(1) Foundation: To be made after the hole is excavated, forms erected, and reinforcing steel is in place.

(2) Final: To be made after the sign is completely installed.

(3) Electrical: Illuminated and electronic signs require an electrical inspection to be made after the electrical work is complete. Underground wiring requires an inspection to be made after all conduits, raceways or other components are installed and prior to the soil being replaced.

(e) Permit fees shall be paid in accordance with the schedule as established by resolution by the city council (refer to chapter 5).

(f) Permitting procedure:

(1) The building official or designee shall be responsible for the administration of sign permits, subject to chapter 5.

(2) Unless otherwise expressly provided for in this chapter, the building official or designee shall review an application for any permit for the erection, relocation, repair, removal or in any way pertaining to signs, and issue an official determination to the applicant within thirty (30) city working days of receipt of the completed application. The review and determination period may be extended for an additional forty-five (45) city working days at the request of the applicant or agent thereof. If the application is in conformity with the terms and requirements of this chapter, the application shall be granted. If the application is not in conformity with the terms and requirements of this chapter the application shall be denied. In the event the application is denied, the building official or the building official's designee shall include the specific basis for the denial in the written determination provided to the applicant. Failure of the building official or the building official's designee requested to review an application relating to constitutionally protected first amendment activity to review and issue a final determination within thirty (30) city working days of receipt of the completed application shall authorize the applicant to conduct the activity for which the approval of the application would otherwise be required.

Sec. 27-289.3. – Allowable signs.

(a) The following signs are exempt from permit requirements of this Sign Code, unless otherwise stated herein or required pursuant to other provisions of the City of Tampa Code of Ordinances:

(1) *Government signs*. No permit is required if a government sign is necessary for the purposes of public health and safety, or is used to identify public services or public facilities, for traffic control, for events, for wayfinding or directions, or to provide information to the community. Otherwise a government sign must comply with requirements of this chapter. Any government sign which contains an electronic message must operate in compliance with subsection 27-289.6(b).

(2) Flags when displayed on a single pole or other supporting structure, subject to the following restrictions:

Zoning district	Maximum height	Maximum size	Number of flags	Location of flags
Residential	35 feet	50 square feet	Any number, up to a maximum of 50 square feet per lot	0 foot setback, subject to the provisions of section 27-283.5

"EXHIBIT A"

Non-Residential	Per the restrictions on freestanding signs in subsection 27-289.3(b)(5)

(3) Signs cut into masonry surfaces without paint or other effect. Such signs might include memorial signs or tablets, names of buildings, and dates of erection.

(4) Two (2) signs per driveway located in non-Residential districts, or at the entrance to a residential subdivision, multi-family development, or mobile home park, provided that:

a. The signs are located on private property and pertain to directing traffic, emergency responders, or pedestrians safely on or off of such property;

b. Each sign shall not exceed four (4) square feet in sign area nor thirty (30) inches in height;

c. If illuminated, an electrical permit shall be obtained in accordance with chapter 5, City of Tampa Code;

d. Signs may be placed with a zero foot setback from the right-of-way, subject to the provisions of section 27-283.5. The square footage of signs under this subsection (4) shall not be counted as part of the maximum allowable square footage for any parcel.

(5) Temporary signs, subject to the following restrictions:

a. Each zoning lot of record shall be allowed the following temporary signs without permit, provided that each temporary sign complies with subsection (a)(5)(ii) below:

1. One temporary sign per 200 feet of frontage or portion thereof; and

2. Warning signs; and

3. Any number of signs, which are associated with an event, including but not limited to:

i. During the time a property is actively marketed for sale, rent, or lease on such sign or in one or more paper or online listing(s);

ii. During the time the property is under construction, provided that such signs are removed prior to issuance of a certificate of occupancy;

iii. For a local, state, or national election;

iv. Holiday, seasonal, or commemorative decorations; or

v. For a public or semipublic event or function.

b. All temporary signs placed under this subsection (5) shall not be considered as part of the maximum square footage permitted on any parcel, and are subject to the following restrictions:

1. No illumination is permitted, nor may any part of the sign be electronic.

2. Event signs shall be erected no more than sixty (60) consecutive calendar days prior to the event and shall be removed within six (6) consecutive calendar days of the conclusion of the event.

3. A maximum of thirty-two (32) square feet of total temporary signage is permitted at any one time per parcel.

4. No single temporary sign may exceed the following sizes:

Zoning district	Maximum sign surface area	Maximum height (ft)
Residential	8 SF	6 ft
Non-Residential		
Property has less than 200 feet of street frontage	8 SF	10 ft
Property has 200 or more feet of street frontage	16 SF	10 ft

(6) Window signs which comprise, in aggregate, twenty-five (25) percent of the total window area or less.

(7) Signs incorporated on machinery or equipment at the manufacturer's or distributor's level, such as signs customarily affixed to vending machines, newspaper racks, and gasoline pumps. Such signs shall not be counted as part of the maximum square footage permitted on any parcel.

(8) Interior signs which are displayed on the inside of a building and not visible from a public place. Such signs shall not be counted as part of the maximum square footage permitted on any parcel.

(9) One (1) address sign of no more than two (2) square feet of total sign face area in Residential districts and no more than three (3) square feet of total sign face area in Non-Residential districts. The square footage for the address sign shall be

allowed in addition to the total sign surface area allowed for freestanding and/or building signs.

(10) Signage applied to outdoor furniture, including umbrellas, that shall consist of no more than one (1) line of letters or an identification emblem, initials or insignia, or other feature painted on the furniture.

(11) Signs which are required pursuant to the City of Tampa Code of Ordinances, Florida Statutes or other regulations in the location and up to the size required by the applicable regulation shall be allowed. Such legally required signage shall be allowed in addition to the total sign surface areas allowed for other signage provided for in this Sign Code.

(b) The following signs are allowed only with a permit:

(1) In addition to the temporary signage allowed under subsection (a)(5) above, one (1) temporary sign exceeding the size of a sign allowed under section (a)(5) may be displayed for a period not to exceed thirty (30) consecutive calendar days, nor more than sixty (60) days in a single year (up to ninety (90) days in the Central Business District as defined in Chapter 27, City of Tampa Code of Ordinances), provided:

a. No such temporary sign may be displayed at a height of more than fifteen (15) feet (except in the Central Business District as defined in Chapter 27, City of Tampa Code of Ordinances, a temporary sign attached to a building may not exceed the height of the building upon which the sign is attached), nor shall such sign be any larger than a building sign allowed for the parcel on which the sign is displayed;

b. The temporary sign shall be displayed only in non-residential zoning districts, or within non-residential or mixed use designated areas of site plan districts;

c. The temporary sign shall be attached to the building in a manner as provided for in Chapter 5 of the City Code and shall not be affixed to vehicles or utility poles except as provided for in Chapter 22 of the City Code;

d. The temporary sign shall be maintained in a state of good repair, and such signs that are frayed, torn, or otherwise in disrepair are prohibited. A permit is required prior to the installation of any temporary sign exceeding the size of a temporary sign allowed under section (a)(5) above.

"EXHIBIT A"

(2) At each entrance to a platted subdivision, one (1) double-faced or two (2) single-faced permanent sign(s), provided that all of the following requirements are met:

a. The sign(s) shall not create a physical or visual hazard for pedestrians, bicyclists, or motorists entering or leaving the subdivision and shall be set back a minimum of fifteen (15) feet from the right-of-way line and thirty (30) feet from the intersection of the rights-of-way;

b. An individual, firm, partnership, association, corporation or other legal entity shall be designated as the person responsible for the perpetual maintenance for the subdivision sign(s);

c. The sign(s) shall not exceed ten (10) feet in height; and

d. The sign(s) shall not exceed a total of forty (40) square feet in aggregated display area.

(3) At each entrance to a multiple family residential development or mobile home park, one (1) double-faced or two (2) single-faced permanent sign(s) may be located, provided that all of the following requirements are met:

a. The sign(s) shall not create a physical or visual hazard for pedestrians, bicyclists, or motorists entering or leaving the development and shall be set back a minimum of fifteen (15) feet from the right-of-way line and thirty (30) feet from the intersection of the rights-of-way

b. Within the CBD, refer to art. III, div2., subdn. 3;

c. Such signs shall not exceed two (2) square feet in display area for each dwelling unit, up to and including twenty (20) units—in no event shall the sign(s) exceed forty (40) square feet of aggregated display area;

d. Such signs shall not exceed ten (10) feet in height; and

e. Such signs shall be set back fifteen (15) feet from the right-of-way line and thirty (30) feet from the intersection of the rights-of-way.

(4) Two (2) signs per driveway located in Non-Residential districts or at the entrance to a residential subdivision, multi-family development, or mobile home park, provided that all of the following requirements are met:

a. The signs pertain to directing traffic, emergency responders, or pedestrians safely on or off of such property;

b. The entire sign structure shall not exceed five (5) feet in height;

c. The sign copy shall not exceed twelve (12) inches or thirty-two (32) square feet; and

d. Such signs shall meet the separation and setback requirements of freestanding signs in subsection (b)(5) below.

(5) *Freestanding signs*. Freestanding signs shall be allowed in office, commercial and industrial districts, provided the following specific regulations are met (refer to sec. 27-289.4 for electronic message sign standards):

a. *Number:* One (1) Freestanding sign is permitted for each parcel having street frontage. Additional signs are allowed as follows:

1. For a corner lot, as defined in section 27-161, one (1) additional freestanding sign is permitted to be located adjacent to the second street frontage provided that the second street frontage is a minimum of three hundred (300) feet of continuous, lineal public street frontage; or

2. For a parcel with a street frontage greater than three hundred (300) feet, one (1) additional freestanding sign is permitted for each additional three hundred (300) feet of continuous, lineal street frontage.

b. *Placement* (See Diagram 2):

1. The placement and orientation of a freestanding sign shall be limited to arterial and/or collector street roadways (as identified in the City of Tampa Department of Public Works "Roadway Functional Classification System"), unless either of the following situations exist:

i. The zoning lot has street frontage only on local street; or

ii. The zoning lot has street frontage on a local street where the entire block face on both sides of the local street has no residentially zoned or used parcels.

2. Freestanding signs shall be placed no closer than one hundred fifty (150) feet apart on the same zoning lot.

3. Freestanding signs shall be placed no closer than ten (10) feet from any residential zoning district. For the purpose of determining the spacing requirement found in this subsection, distances shall be

measured from the sign structure to the property line of the nearest residentially zoned property.

c. *Size:*

1. The allowable sign area for a freestanding sign shall be one (1) square foot of sign surface area for each lineal foot of street frontage on an abutting public street as follows:

Feet of Frontage	Maximum Sign Surface Area (SF)
< 20 feet	20 (SF) per sign face
20 feet to 50 feet	20 - 50 SF per sign face (1 SF per foot of street frontage)
> 50 feet	50 SF per sign face

2. If a parcel is entitled to more than one (1) freestanding sign under this section, then two (2) or more allowable freestanding signs may be combined into a single freestanding sign, not to exceed a maximum allowable sign surface area of one hundred (100) square feet per sign face.

3. The allowable sign surface area shall not include any decorative elements surrounding the sign face. However the decorative elements shall not protrude more than three (3) feet beyond the sign face.

d. *Height-Setback:* The maximum height of a freestanding sign at the five-foot setback line shall be ten (10) feet, measured from the established grade at the property line along the right of way from the closest leading edge of the freestanding sign. For every one (1) foot of additional setback, the height of the freestanding sign may be increased by one (1) foot to a maximum height of twenty (20) feet. In no event may the freestanding sign interfere with the visibility triangle as provided in section 27-283.5 of the City Code.

e. *Design:* The sign face shall be supported by a sign structure which shall consist of a single pier or pillar with a minimum diameter or horizontal dimension of thirty (30) inches or, alternatively, by two (2) piers or pillars, each with a minimum diameter or horizontal dimension of twelve (12) inches. The sign structure shall have materials and architectural details consistent with the principal building it serves or in a manner shown in Diagrams 3 and 4 below.

"EXHIBIT A"

Diagram 1

Freestanding Sign
Structure Design

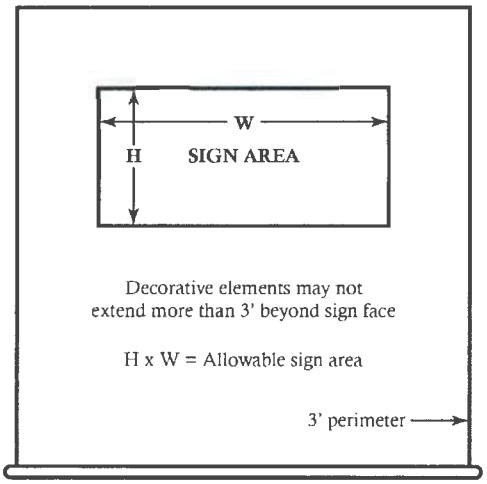

Two Pier or Pillar Sign

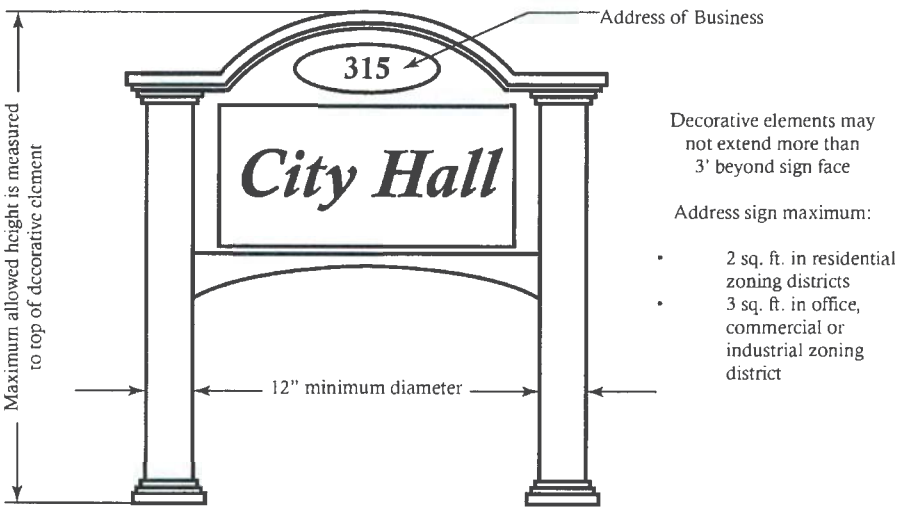

Sign structure must have materials and architectural details consistent with the principal structure

"EXHIBIT A"

Diagram 2

Free Standing Sign Placement

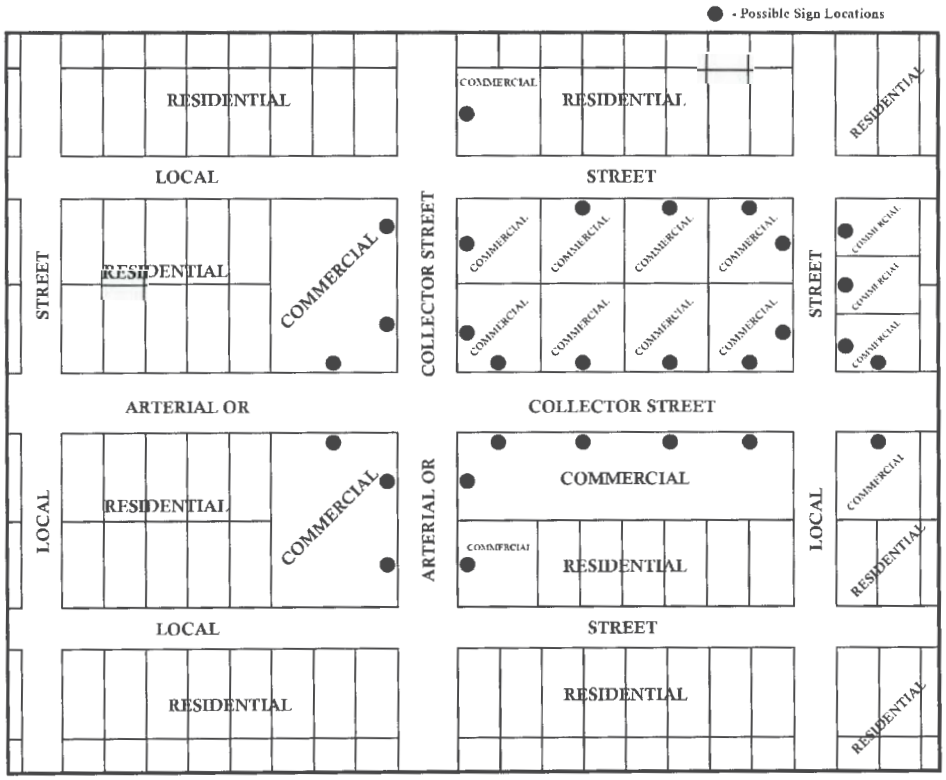

***Placement & Orientation of a free standing sign shall be limited to arterial and/or collector streets unless either of the following situations exists:**

1. The zoning lot has frontage only on a local street, OR
2. The zoning lot has frontage on a local street where the entire block faces a local street, on both sides of the local street, has no residentially zoned parcels.

"EXHIBIT A"

Diagram 3

Sign Surface Area Illustration

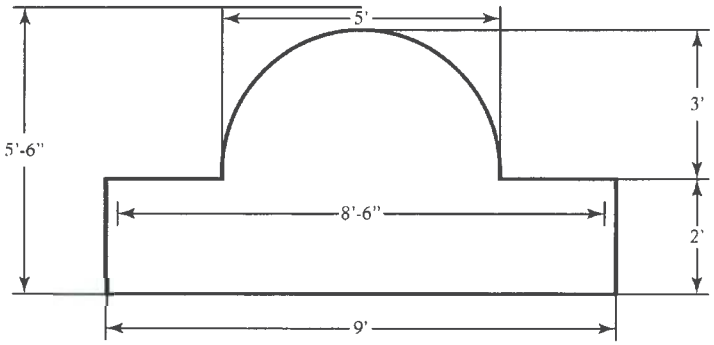

15 sq. ft.

TOTAL
32 sq. ft.

17 sq. ft.

* Sign surface area does not include the frame or structural supporting elements.

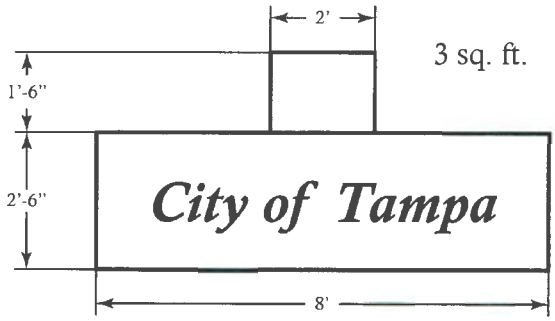

3 sq. ft.

TOTAL 23 sq. ft.

20 sq. ft.

* Where sign is composed of individual letters, characters or symbols the area of the sign shall be the smallest geometric shape which will enclose all of the letters, characters or symbols.

"EXHIBIT A"

Diagram 4

Single Pier or Pillar Sign

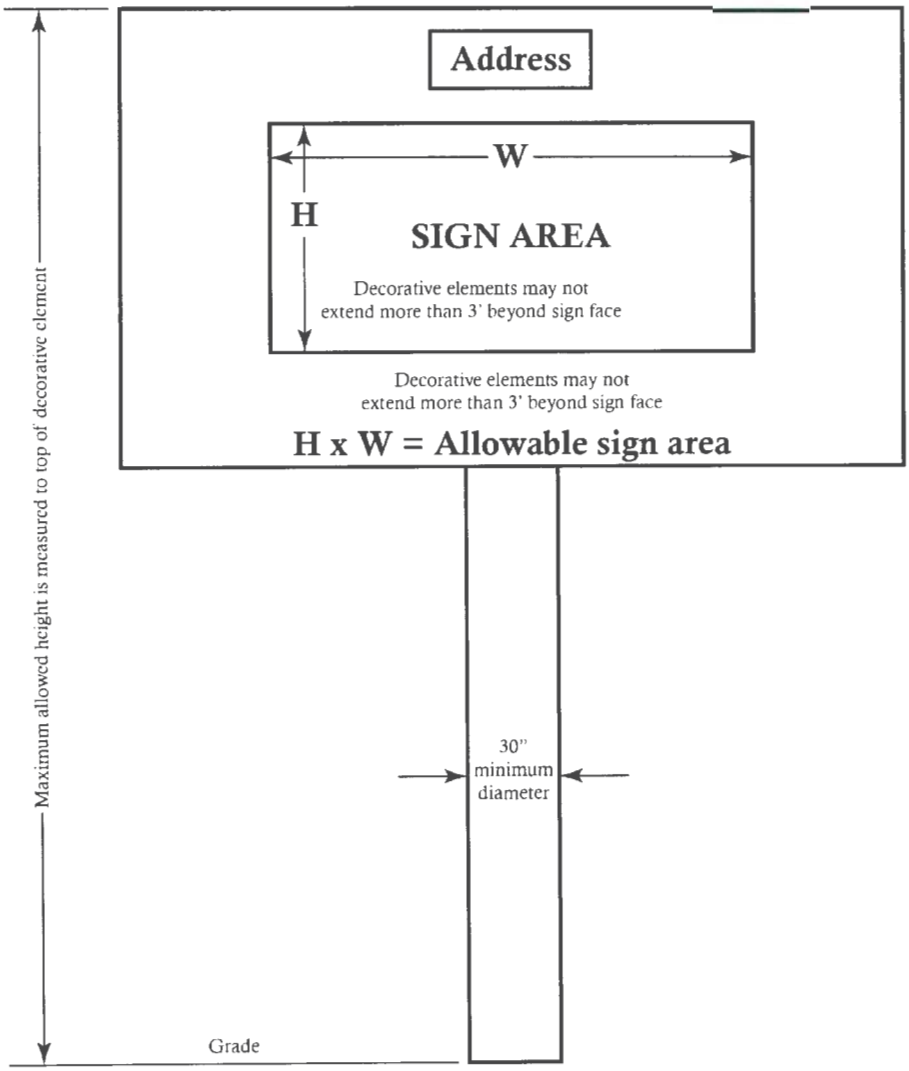

- Sign structure must have materials and architectural details consistent with the principal structure.
- Address sign shall not exceed 2 sq. ft. in a residential zoning district and shall not exceed 3 sq. ft. in an office, commercial or industrial zoning district.

"EXHIBIT A"

(6) *Building signs.* Building signs shall be allowed in office, commercial and industrial districts, provided the following specific regulations are met (refer to sec. 27-289.4 for electronic message sign standards):

a. *Number:*

1. Single occupancy parcels. One (1) building sign shall be permitted for each single-occupancy parcel having street frontage. Corner parcels or double-frontage parcels shall be allowed one (1) sign per street frontage.

2. Multi-occupancy parcels. One (1) building sign shall be permitted for each establishment with a main door entrance which faces a public street in a multiple-occupancy parcel. Establishments located at a corner shall be allowed one (1) building sign for each side of the establishment which faces a public street. Building signs displayed on a multi-occupancy parcel shall be uniformly designed.

b. *Size:*

The maximum allowable sign surface area for each building sign shall be one and one-quarter (1¼) square feet per linear foot of building frontage abutting public street, excluding parking garages that abut a public street, unless otherwise specified in art. III, div. 2. special districts or art. IV overlay districts.

c. *Design:*

1. One (1) projecting sign may be substituted for each building sign, as provided in subsection (b)(7) below. Marquee, canopy, or awning signs may be substituted for building signs as provided in subsection (b)(8) below.

2. Building signs shall not project beyond the roofline or side walls of the establishment to which the sign is attached, nor shall the building sign project more than twelve (12) inches out from the wall to which it is attached.

3. Building signs may contain a six-inch decorative border which shall not be counted as part of the sign surface area calculations.

(7) *Projecting signs.* Projecting signs shall be allowed in office, commercial and industrial districts, provided the following specific regulations are met:

a. Projecting signs may be substituted for the permitted building signs in subsection (6) above, provided that the display area square footage of the projecting sign is not greater than the maximum square footage permitted for a building sign.

b. Projecting signs shall not project more than four (4) feet from the building wall to which the projecting sign is attached.

c. Projecting signs shall not be located above the roofline of the building.

d. The supporting hardware of a projecting sign shall not be visible from the street or sidewalk.

e. Projecting signs shall not be constructed in violation of the public space encroachment limitations specified in this chapter or other applicable city code.

f. Projecting signs shall not be erected closer than ten (10) feet from an interior lot line, adjacent establishment, or a residential property line.

g. Projecting signs, when specifically allowed by this Code, which project over any public or private pedestrian way shall be elevated a minimum of ten (10) feet above such pedestrian way. Projecting signs, when specifically allowed by this Code, which project over any public or private street shall be elevated a minimum of sixteen (16) feet above such street.

(8) *Regulations for marquee, canopy, and awning signs.* Marquee, canopy and awning signs shall be allowed in office, commercial and industrial districts, provided the following specific regulations are met:

a. One (1) sign located on a marquee, canopy, or awning shall be affixed flat to the surface and shall not rise in vertical dimension above the marquee, canopy or awning.

b. The maximum allowable display area for awning, canopy, and marquee signs shall not exceed two (2) square feet per linear foot of building frontage facing a public street.

c. Marquee, canopy and awning signs shall be permitted only when in lieu of a building sign.

d. *Awning signs:* Copy contained on an awning attached to a building shall be considered a building sign for purposes of calculating the maximum allowable sign surface area. The awning upon which the copy is displayed must be a single color, made of opaque materials for the portion of the

awning which is not used as the sign surface area. Down lighting shall be encouraged.

Sec. 27-289.4. – Additional regulations for specific types of signs and signs in special districts; alternative sign plans.

(a) Illuminated signs, including neon signs, shall not produce more than one (1) footcandle of illumination four (4) feet from the sign, when measured from the base of such sign.

(b) Electronic message signs may be permitted in place of part or all of the allowable sign surface area, as provided herein, and the sign surface area of an electronic message sign shall comply with the following standards:

(1) The placement and orientation of an electronic message sign on a property/building with frontage on a street within the city limits shall comply as follows:

a. *Location – Collector and Arterial Streets.* The placement and orientation of an electronic message sign as a freestanding sign, on a property with frontage on an arterial and/or collector street roadways (as identified in the City of Tampa's "Roadway Functional Classification System"), shall comply with provisions set forth in sec. 27-289.3(5)d-e and the following:

Collector/Arterial Roadway Lane Configuration	Right-of-Way Width [1]	Distance Separation between Electronic Message Signs – Same Side of Street [2]	Distance Separation between Electronic Message Signs across Street [3]	Maximum Sign Surface Area per Sign Face
One-Way Street	60' or less	300'	100'	16 SF
	>60' – 80'	280'	120'	24 SF
	>80'	260'	140'	32 SF
Two-Way Street	60' or less	300'	N/A	16 SF
	>60' – 80'	280'	N/A	24 SF
	>80' – 100'	260'	N/A	32 SF
	>100'	240'	N/A	40 SF

NOTES:

[1] Total width of right-of-way by plat, deed, or other applicable official public record.
[2] Measured linearly along the same of the street to each of the closest electronic message signs(s).
[3] Measured in a straight line across the street to each of the closest electronic message sign(s).

Electronic message signs as a building sign: Signs shall comply with provisions set forth in sec. 27-289.3(6)a.1-2 regarding 'number' of signs. Maximum sign surface area for each allowable building sign shall be one-quarter (¼) square foot per linear foot of building façade frontage abutting and facing an arterial and/or collector street roadways (as identified in the City of Tampa's "Roadway Functional Classification System"), excluding parking garages that abut and face such street type, unless otherwise specified in art. III, div. 2. special districts or art. IV overlay districts.

b. *Location – Local Streets*. An electronic message sign shall be allowed on a property/building with frontage on a local street only as follows:

1. Within the boundary of a Community Development District ("CDD") with at least five hundred (500) single-family dwelling units;

2. The local street is maintained by the CDD;

3. The electronic message sign shall not be visible from public rights of way located outside of the CDD boundary;

4. The electronic message sign shall be setback at least thirty (30) feet from any parcel developed with a residential use;

5. Sign Surface Area: Five (5) feet maximum height; eight (8) feet maximum width;

6. Sign Structure: Ten (10) feet maximum height above finished grade; and,

7. The sign shall adhere to all other applicable laws and regulations.

(2) *Dwell Time*. The copy on all electronic message signs, including government signs, shall not change more than once in a fifteen (15) second period. The message shall be static during this dwell time. There shall be no flashing or varying light intensity or movement during the message. Messages shall not scroll and shall not give any appearance of moving, or in any way include active movement. Traffic control devices and related signs and government signs, which are necessary for public health and safety, are exempt from this paragraph.

(3) *Lighting*. Each electronic sign's operating system shall contain an automatic dimmer control that utilizes GPS to determine sunrise and sunset times and reduce illumination for the time period between one half-hour (1/2) before sunset and one-half hour (1/2) after sunrise, and may further contain a light sensing device,

placed in a manner to prevent influence by artificial lighting ,to adjust brightness as ambient light conditions change, in order to insure that the message meets the following brightness standards:

(i) The maximum brightness shall be 0.3 foot-candles above the ambient light measured two hundred fifty (250) feet perpendicular from the face of the sign, unless a residential property is located within two hundred (200) feet of the base of a sign structure, in which case the sign permit applicant must reduce light intensity on, or shade or shield the electronic sign, or direct the lighting from such electronic sign away from such residential property such that the lighting from the electronic sign shall not result in a light intensity greater than three-tenths of one (0.3) foot-candle above ambient lighting, as measured at the property line of any residential property within two hundred (200) feet of the base of the sign structure.

(ii) At the time of sign permit application, the sign owner applying for the electronic sign permit sign shall submit a certification that this standard has been satisfied.

(iii) No electronic sign shall display light of such intensity that it interferes with the effectiveness of an official traffic sign, signal or device.

(iv) The electronic sign shall have a default mechanism or setting that will cause the sign to turn off or freeze in one (1) position at a brightness no brighter than normal operation if a malfunction or failure (meaning any unintended interruption in message sequencing) occurs.

(v) The electronic sign shall not be configured to resemble a warning or danger signal nor shall there be any configuration which may a cause a driver to mistake the sign for a warning or danger sign. The sign shall not resemble or simulate any lights or official signage used to control traffic.

(4) Installation on/to/within an existing sign with an electronic message sign shall comply with the standards set forth in section 27-289.8(a)(9) and will require all appropriate permits pursuant to the City of Tampa Code of Ordinances.

(5) *Civil infraction.* Any violation of this section 27-289.6(b) is hereby declared a civil infraction that may be prosecuted as provided in section 27-289.14(c). Ownership of the land upon which the sign is located, or information contained in any sign, including names, addresses or phone numbers of persons or entities benefiting from or advertising on the sign, shall be sufficient evidence of ownership and/or beneficial use or interest for purposes of enforcing this section (b)(5). More than one person or entity may be deemed jointly and severally liable

for the placement or erection of the same sign. Each unlawful sign shall be deemed a separate violation of this section.

(c) For purposes of conformance with right-of-way setback regulations, any property owner who has an on-site or an off-site sign which was made nonconforming in regard to required setbacks from the right-of-way by governmental right-of-way acquisition, may measure the setback from the property line location prior to acquisition, provided that the sign is erected on private property and not within the visibility triangle as defined in section 27-283.5 of the City Code.

(d) Where property is in a site planned controlled zoning district or a designated Overlay District, additional or modified regulations may apply. In those zoned areas, the most restrictive regulation applies.

(e) *Alternative sign plan.* As an alternative to the provisions of 27-289.3, the following developments may establish an alternative sign plan:

(1) The owner(s) of one (1) or more parcels that constitute one (1) zoning lot of record or subject to the same site plan zoning district may erect on-site signs in accordance with an approved alternative sign plan. An alternative sign plan may be approved by city council as part of the site plan zoning of the project or development. If an alternative sign plan is not approved as part of a site plan zoning of a project, then a permit may be issued for an alternative sign plan, subject to review and approval by the zoning administrator in accordance with section 27-60 or the planning and urban design manager in accordance with section 27-60.1, and the following criteria:

(i) All parcels subject to the sign plan shall be part of the same zoning lot of record and shall be interconnected with internal driveways and easements so that the parcels function as a single project; and

(ii) The sign plan shall depict the location and nature of all signs to be erected; and

(iii) The sign plan shall not allow more signs and/or sign surface area than would be allowed under the foregoing regulations if applied to each parcel separately; and

(iv) The signs proposed in the sign plan shall conform with the height, setback and distance requirements from other parcels not subject to the sign plan or public place contained in 27-289.3; and

(v) The proposed sign plan shall be set forth in a written agreement executed by all persons or entities owning property or having a mortgage interest in

one (1) or more of the parcels subject to said sign plan. If the sign plan is approved by staff, then the agreement shall be recorded in the Public Records of Hillsborough County, Florida as covenants and restrictions applicable to sign on all of the subject parcels. A copy of the recorded agreement shall be provided to the city prior to the issuance of any permits to construct or erect signs pursuant to said sign plan.

(2) If there is common ownership, the owner(s) of more than one (1) parcel may propose a common alternative sign plan, which advances the purpose of this chapter by substantially relinquishing entitlements to sign on one (1) parcel in exchange for sign on the adjacent parcel. The sign plan must meet the following criteria:

(i) The purpose of the sign plan is to provide direction to uses located off the arterial or collector roadway.

(ii) The additional entrance sign shall be permitted in accordance with section 27-289.3(b)(4) and should be located so as to facilitate finding the "user" named on the sign.

(iii) For each square foot of sign placed off site, there shall be an "in kind" reduction of signs and/or sign surface area on site.

(iv) The allowable additional entrance sign surface area on the parcel having frontage on the arterial or collector street shall be permitted in accordance with section 27-289.3(b)(4).

(v) The affected parcels of the development shall abut common improved street right-of-way.

(vi) The affected parcels of the development shall not be more than one-quarter (¼) mile (one thousand three hundred twenty (1,320) feet) apart, measured from the nearest property lines.

(vii) The affected parcels of the development shall be located in non-residential zoning districts and shall not be separated by a residential zoning category.

(viii) The plan must be recorded at the clerk of the circuit court and any revocation of the approved plan must be done with the consent of the City of Tampa. The revocation of the plan will require that each individual zoning lot must comply with the sign regulations of the City of Tampa as a single site.

"EXHIBIT A"

Sec. 27-289.5. – Historic signs.

(a) *Historic signs for local historic districts and landmark sites outside the Ybor City Historic District.* Approval of the restoration, rehabilitation, or reconstruction, as defined in section 27-43, of an historic sign that is attached or was previously attached to the historic building shall be based upon documentation of prior existence and shall have existed as a character-defining feature of the historic building. Any historic sign in a historic district or on a landmark site outside the Ybor City Historic District is subject to the final approval by the Architectural Review Commission.

Historic signs shall maintain the historic square footage dimensions for their sign face area and shall be installed as follows:

(1) Historic signs shall have no maximum projection into the right-of-way; however, no sign may project within two (2) feet, six (6) inches of that portion of the right-of-way intended for vehicular use.

(2) Historic sign placement into the right-of-way shall leave street corners free of obstructions to allow for safe traffic movement and placement of utilities.

(3) If the right-of-way is needed by the city for any reason, the owner shall remove or relocate the sign at the owner's expense within forty-five (45) city working days of the written notice by the city.

(4) The bottom-most portion of the projection shall be a minimum of nine (9) feet above grade.

(5) Building columns or support poles for historic signs are prohibited from projecting into the right-of-way.

(6) Lighting underneath sign projections shall be provided and maintained by the property owner.

(7) A hold harmless agreement in a form acceptable to the city must be signed by the owner and submitted to the city prior to the issuance of the sign permit.

(b) Regulations for historic signs in the Ybor City Historic District. Approval of the restoration, rehabilitation, or reconstruction, as defined in section 27-43, of an historic sign that is attached or was previously attached to the historic building shall be based upon documentation of prior existence and shall have existed as a character-defining feature of the historic building. Any historic sign in the Ybor City Historic District is subject to the final approval by the Barrio Latino Commission.

Historic signs shall maintain the historic square footage dimensions for their sign face area and shall be installed as follows:

(1) Historic signs shall have no maximum projection into the right-of-way; however, no sign may project within two (2) feet, six (6) inches of that portion of the right-of-way intended for vehicular use.

(2) Historic sign placement shall leave street corners free of obstructions to allow for safe traffic movement and placement of utilities.

(3) If the right-of-way is needed by the city for any reason, the owner shall remove or relocate the sign at his expense within forty-five (45) city working days of the written notice by the city.

(4) The bottom-most portion of the projection shall be a minimum of nine (9) feet above grade.

(5) Building columns or support poles for historic signs are prohibited from projecting into the right-of-way.

(6) Lighting underneath sign projections shall be provided and maintained by the property owner.

(7) A hold harmless agreement in a form acceptable to the city must be signed by the owner and submitted to the city prior to issuance of sign permit.

(c) All historic signs that encroach in the right-of-way are subject to the encroachment review process that exists for all other forms of right-of-way encroachments. An historic sign that projects into any portion of the public right-of-way may include, but is not limited to, a marquee (projecting exterior shelter in front of a public building, such as a theater, where the sign is a significant part of the fascia); blade or projecting sign (thin sign attached to the side of a building); canopy sign (sign is attached to the underside of a building canopy); or awning sign (sign imprinted on the surface of the awning).

Sec. 27-289.6. - Signs; Lee Roy Selman Expressway.

(a) *Definitions.*

(1) Expressway shall mean the Lee Roy Selman Expressway passing through the City of Tampa, Florida, including all of its facilities, related approaches, viaducts, bridges, interchange facilities and service roads now existing or as may be later constructed or designated.

(2) Applicable regulations shall mean any pertinent zoning, building or other regulations in effect within the city limits of the City of Tampa of the State of Florida.

"EXHIBIT A"

(3) Protected areas shall mean all property in the City of Tampa within five hundred (500) feet of the right-of-way of the expressway right-of-way. Property shall be designated a protected area as soon as it is designated as expressway right-of-way by official act of the Tampa-Hillsborough County Expressway Authority.

(4) Sign shall mean any display of characters, letters, illustrations, or any ornamentation designed or used as an advertisement, announcement or to indicate direction.

(5) Erect shall mean to construct, build, rebuild (if more than fifty (50) percent of the structure members involved), relocate, raise, assemble, place, affix, attach, paint, draw, or in any other manner bring into being or establish.

(6) Temporary sign shall mean signs to be erected on a temporary basis.

(b) *Signs prohibited in protected areas.* It shall be unlawful hereafter for any person, firm, corporation, or other legal entity to erect, permit or maintain any sign in protected areas, except as provided for hereinafter.

(c) *Exceptions.* Erection of the following signs shall be permitted in protected areas, subject to the conditions and limitations listed herein and further, subject to other applicable regulations where such regulations are more restrictive or more definitive than the provisions of this section and are not inconsistent therewith.

(1) Temporary signs which are located and oriented to serve streets other than the expressway, and are located at least one hundred (100) feet from the expressway right-of-way, except that such signs may serve and be oriented to the expressway if the property concerned abuts the expressway right-of-way and is not served by a parallel expressway service road, or is abutting the expressway right-of-way and has direct, permanent legal access to the expressway. In no event shall any temporary sign be larger than one hundred (100) square feet.

(2) Non-temporary signs which are located on and oriented to the frontage on the street which provides actual and direct access to the front or principal entrance of the place of business. "Oriented," shall mean, in the case of detached signs, placed at a ninety (90) degree angle to the street being served; in the case of roof signs, parallel to the fronting such street and within the front twenty-five (25) percent of the building concerned; and in the case of pylon signs, within the front twenty (20) percent of the building concerned. Building signs within two hundred (200) feet of the expressway shall be confined to the wall of the building containing the principal entrance, except that a wall sign may be placed on one (1) other wall of such building and shall be limited to ten (10) percent of such other wall area, but in no event shall be larger than eighty (80) square feet. In no event shall any

detached sign be erected within the protected area which is greater in height than twenty-five (25) feet above the average grade of the premises concerned, and no roof sign shall be erected which is greater in height above the roof than ten (10) feet.

(3) Off-site signs shall not be erected for the purpose of servicing the expressway, and off-site signs in protected areas shall be erected and oriented to serve only streets other than the expressway, subject to the following conditions:

(i) That in no event shall any off-site sign be erected or placed closer than two hundred (200) feet to the right-of-way lines of the expressway.

(ii) That no off-site sign shall be erected that is larger than fifteen (15) feet in width and fifty (50) feet in length, whether single or multiple boards.

(iii) That no detached off-site sign shall be erected which is more than twenty-five (25) feet above the average existing grade of the site on which such sign is erected, or the flood criteria elevation (if property is filled to such elevation) whichever is the greater; nor shall a roof sign be erected which is more than twenty (20) feet above the roof.

(iv) That no off-site signs shall be erected or placed within three hundred (300) feet of another off-site sign, such distance to be measured in all directions from the outermost edges of such sign.

(v) That no off-site signs shall be erected or placed within one hundred (100) feet of any church, school, cemetery, public park, public reservation, public playground, state or national forest.

(vi) That off-site signs shall be erected and placed at right angles to the street which they are serving and shall be located within the front seventy (70) feet of the lot or tract on which erected.

(vii) That no off-site signs shall be erected or placed on a street dead-ended by the expressway, between the expressway and the first street running parallel to the expressway and on the same side of the dead-end street, even though such distance may be greater than two hundred (200) feet.

(viii) That off-site signs shall be erected and placed only on property conforming in sign and frontage to the requirements of the zoning district in which located.

(ix) That off-site sign structures shall be of the so-called cantilever-type construction (double-faced sign, both faces of the same size, secured back to back on vertical supports with no supporting bracing).

(d) *Nonconforming signs.* Signs which have been erected prior to the effective date of this section may continue to be maintained until March 1, 1986. Thereafter, unless such signs conform to the provisions of this section, they shall be removed. If a nonconforming spacing situation can be eliminated by the removal of one (1) sign, the sign which has been erected for the longest period of time shall have priority.

(e) *Variances.* No variances shall be granted through provisions of applicable regulations which will in any way conflict with or vary the provisions of this section.

Sec. 27-289.7. - Prohibited signs enumerated.

(a) Any sign not specifically permitted or authorized by this Code is prohibited; provided, however, that any authorized or permitted sign under this Code is allowed to contain non-commercial speech in lieu of any other speech.

(b) The following types of signs are expressly prohibited, except as otherwise provided by this Code:

Prohibited Sign Type	Conditions
Abandoned signs	-
Activated signs	-
Revolving signs	-
Sidewalk signs	-
Advertising balloons	-
Snipe signs	Includes those attached to trees or natural features, telephone poles, utility poles, public benches, streetlights, or on any public property or right-of-way
A-frame signs	-
Billboard signs	Except nonconforming billboard signs or variance signs described in section 27-289.15 of this Code
Beacon lights	-
Vehicle signs or trailers	When such are used exclusively for the purpose of displaying a sign
Other Signs	Which imitate or resemble official traffic or government signs and signals
Back to back sign faces that are not parallel	-
Roof signs	[1]

"EXHIBIT A"

Portable signs	-
Window signs	In aggregate, shall not cover more than twenty-five (25) percent of the total window surface
Off-site signs	-
Signs in or upon any river, bay, lake, or other body of water within the limits of the city	-
Signs attached to or painted on piers or seawalls	Not including official regulatory or warning signs
Pennants	-
Feather signs	-
Any sign which:	Bears or contains statements, words or pictures which have been adjudged obscene in the community
	Employs motion picture projection or has visible moving parts or gives the illusion of motion
	Emits audible sound, vapor, smoke, odor particles or gaseous matter
	Obstructs, conceals, hides, imitates or otherwise obscures from view any official traffic or government sign, signal or device
	Has unshielded illuminated devices that produce glare or are a hazard or nuisance to motorists or occupants of adjacent properties
	Due to any lighting or control mechanism, causes radio, television or other communication interference
	Is erected or maintained so as to obstruct any firefighting equipment, window, door or opening used as means of ingress or egress for fire escape purposes, including any opening required for proper light and ventilation
	Is erected on public property or a public right-of-way, except government signs or other signs as expressly allowed in the Code

Notes:

[1] Exception: A roof sign shall be permitted to replace an existing or historic sign on the roof of a building located in a local historic district or on a landmark site when the all of the following four (4) conditions have been satisfied:

- If an historic sign, the design of the roof sign shall be based upon a historic reference for the original design, location, and size of the sign, and photographic information shall be presented to verify the historic reference;

- The sign shall not be an off-site sign;
- The maximum size of the sign shall not exceed twenty-five (25) percent of the total roof area of the building;
- The Architectural Review Commission or the Barrio Latino Commission, as appropriate, shall approve the location and design of the sign prior to the application for the sign permit.

(c) Notwithstanding any Code provision to the contrary, neither the city council nor any board of the city may grant a variance allowing the erection of any of the prohibited signs expressly enumerated in this section 27-289.7.

Sec. 27-289.8. - Nonconforming signs.

(a) Any sign which did not conform to the City of Tampa Sign Code on the day before July 1, 2017, and which should have been removed or modified under prior law shall be illegal signs. Any sign which was legally permitted and constructed pursuant to then adopted Sign Code prior to July 1, 2017, shall be considered nonconforming signs and shall be governed as provided herein.

(1) Unless otherwise subject to the provisions of F.S. § 70.20 or subject to the provisions of section 27-289.15, any sign made nonconforming by this Sign Code shall be considered a nonconforming sign and shall be made to conform to this Sign Code as provided herein. In connection with any billboard sign, if any conflict exists between the terms of this section and section 27-289.15 of this City of Tampa Sign Code, then section 27-289.15 shall control.

(2) A nonconforming sign may not be enlarged or altered in a way which increases its degree of nonconformity, but any sign or portion thereof may be altered to decrease its degree of nonconformity, except as provided herein.

(3) A nonconforming sign shall not be structurally altered to prolong the life of the sign. Reasonable repair and maintenance of nonconforming signs, including change of copy, is permitted, as provided for herein. Reasonable repair and maintenance means the work necessary to keep the sign, including the sign structure, in a good state of repair, but does not include replacement of materials in the sign structure. Reasonable repair does not include:

a. Any modification that changes the structure, or type of structure, such as conversion of a wooden sign structure to a metal sign structure;

b. Any modification, including the addition of embellishments, that changes the sign area or the height above ground level;

c. Any modification that enhances the visibility of the sign's copy, or the period of time that the copy is visible;

d. Any modification that adds changeable faces or electronic message signs to any nonconforming building sign; or

e. Any modification that adds artificial lighting, or changes the existing lighting such that illumination is increased.

(4) Should a nonconforming sign become damaged, destroyed or deteriorated by any means to the extent that it requires more than reasonable repair and maintenance, as defined in subsection (3) above, then the sign shall not be reconstructed except in compliance with the sign code. In the event that a nonconforming sign was approved as part of a site plan zoning approval, then the nonconforming sign may be reconstructed in accordance with the site plan zoning approval.

(5) Should a nonconforming sign be moved for any reason, it shall thereafter conform to the regulations for the district in which it is located after it is moved.

(6) A nonconforming sign shall be considered an abandoned sign and shall be removed if either the sign or the sign structure has not been used, or if the parcel or parcels upon which the sign is located becomes vacant or unoccupied for a period of ninety (90) consecutive calendar days or more, unless the parcel or parcels upon which the sign is located undergo a major renovation, as provided herein.

(7) If there is a major renovation on a parcel or parcels upon which the nonconforming sign is located, as defined in Chapter 27 of the Code, then any sign located upon the upon the parcel or parcels must comply with the current sign code unless it can be demonstrated the freestanding sign or signs comply with current wind-load standards as set forth in Chapter 5 of this Code of Ordinances.

(8) When the city acquires, or is in the process of acquiring, property pursuant to its power of eminent domain, and the acquisition would result in the creation of a nonconformity to the size or location of signs, the size and location of the sign shall not be considered nonconforming.

(9) An electronic message sign may be installed on/to/within a nonconforming, freestanding sign pursuant to the following:

a. No more than one (1) electronic message sign shall be permitted per nonconforming, freestanding sign;

b. The electronic message sign shall be limited to the sign surface area set forth in section 27-289.4(b);

c. No alterations, other than reasonable repair and maintenance as described in (3) above, shall be permitted to the vertical structural supports for the sign structure. If the sign structure, as it exists, will not comply with current wind-load standards as set forth in chapter 5 of this code, then the electronic message sign shall not be permitted on/to/within the nonconforming sign;

d. Any electrical improvements made to supply necessary power to the electronic message sign shall be permitted, so long as such improvements do not conflict with paragraph c. above; and,

e. Any electronic message signs installed pursuant to this subsection shall comply with all operational requirements set forth in this division.

(b) Unless expressly authorized by this chapter, nonconforming status shall not be afforded to pre-existing signs which have been installed, constructed, placed or maintained in violation of this Code.

Sec. 27-289.9. - Abandoned signs; maintenance of all signs.

(a) An abandoned sign is prohibited and shall be removed by the advertiser, sign owner, sign contractor or owner of land upon which such sign is found within thirty (30) calendar days after written notice by the neighborhood improvement manager. Permanent on-site signs applicable to a business temporarily suspended because of a change in ownership or management shall not be deemed to be abandoned unless the property remains vacant for a period of ninety (90) consecutive calendar days or more.

(b) All signs regulated by this Code, including their supports, braces, guys and anchors, electrical parts, lighting fixtures and all painted and display areas shall be maintained so as to present a neat, clean appearance. Painted areas and sign surfaces shall be kept in good condition, and illumination, if provided, shall be maintained in safe and good working order.

(c) Weeds and grass shall be kept cut in front of, behind, underneath and around the base of ground signs for a distance of ten (10) feet, and no rubbish or debris shall be permitted under or near such signs.

"EXHIBIT A"

Sec. 27-289.10. - Signs on right-of-way.

(a) *Prohibition of signs on rights-of-way.* It shall be unlawful for any person, firm, corporation or other entity, for its own or the benefit of another, to erect, place, post, install, affix, attach or in any other way locate or maintain a sign upon, within or otherwise encroaching on a City of Tampa right-of-way or upon a structure located within such a right-of-way. Information contained in any sign, including names, addresses or phone numbers of persons or entities benefiting from or advertising on the sign shall be sufficient evidence of ownership and/or beneficial use or interest for purposes of enforcing this section. More than one person or entity may be deemed jointly and severally liable for the placement or erection of the same sign. Each unlawful sign shall be deemed a separate violation of this section.

(b) *Exclusions.* The following signs may be erected in rights-of-way within the city:

(1) Traffic-control devices, as defined in City of Tampa Code Chapter 15;

(2) Government signs;

(3) Signs approved or permitted for placement or erection on or within the right-of-way as a historic sign under the provisions of this Sign Code;

(4) Bench signs as permitted by and in accordance with City of Tampa Code Chapter 22;

(5) Banner signs as permitted by and in accordance with City of Tampa Code Chapter 22; and

(6) Such other signs as authorized under the rules and regulations of the transportation division for traffic generation businesses, facilities and institutions.

(c) *Abatement.* Except as provided otherwise in this section, any sign located upon or encroaching on a city right-of-way as described in subsection (a) above, shall be subject to immediate removal and impounding by the neighborhood improvement manager at the joint and several expense of (1) the owner of the sign; (2) the person or entity which erected the sign and (3) the person or entity for whose benefit the sign was erected or maintained.

(1) *Illegal signs of negligible or no value; destruction.* Any sign placed or erected in a right-of-way in violation of subsection (a), which has negligible or no value due to its perishable or nondurable composition, including, but not limited to, those made out of paper, cardboard or posterboard, shall be deemed abandoned and may be destroyed by the city after removal. No opportunity to reclaim such a sign shall be given by the city.

(2) *Recovery of impounded signs; abandonment and destruction.* Except for those signs described in subparagraph (c)(1) above, any sign removed and impounded by the city shall be held in storage and the owner, if the owner's identity and whereabouts are known to city, shall be provided with written notice of impoundment and fifteen (15) calendar days from the date of notice to reclaim any such sign. Any impounded sign stored by the city may be destroyed if not reclaimed within fifteen (15) calendar days of the written notice date or within fifteen (15) calendar days of the date of removal if the identity and whereabouts of the owner is not known to city.

(d) *Civil infraction.* Any violation of this section 27-289.10 is hereby declared a civil infraction that may be prosecuted as provided in section 27-289.14(c).

Sec. 27-289.11. - Hazardous signs.

The code enforcement official, as authorized by chapter 19, may cause any sign or other advertising structure, which is an immediate peril to persons or property to be removed immediately at the expense of the owner, agent, lessee or other person having beneficial use of the sign, the sign contractor or the owner or lessee of the land upon which the sign is located.

Sec. 27-289.12. - Review of sign related decisions.

(a) An owner, or duly authorized agent of an owner, of any building or structure who receives an official order, requirement, decision or determination made by any staff member in interpreting the sign-related provisions of this chapter may seek review of said order, requirement, decision or determination pursuant to section 1-19. In the event that the zoning administrator delegates the authority to render a sign related decision, then the zoning administrator shall be the reviewing official; otherwise, the reviewing official shall be the director.

(b) Persons with standing to seek review of any order, requirement, decision or determination under this chapter related to constitutionally protected first amendment activity shall be entitled, as a matter of right, to seek immediate review of such final determination by filing an appropriate pleading with the circuit court.

"EXHIBIT A"

Sec. 27-289.13. – Boards authorized to grant sign-related variances.

(a) *Variance review board.* Except as provided in subsections (b) and (c) below, the variance review board (VRB) as designated in section 27-79, shall have the authority to hear and grant variances from any of the sign-related provisions of this chapter.

(b) *Architectural Review Commission.* In any historic districts or landmark sites, excluding the Ybor City Historic District, designated by the historic preservation commission pursuant to section 27-114, shall have the authority to hear and grant variances from any of the sign-related provisions of this chapter.

(c) *Barrio Latino Commission.* In the Ybor City Historic District, as designated and defined in section 27-96, the Barrio Latino Commission (BLC) shall have the authority to hear and grant variances from any of the sign-related provisions of this chapter, shall have the authority to hear and grant variances from any of the sign-related provisions of this chapter.

Sec. 27-289.14. – Penalties and remedies.

(a) Unless otherwise stated, a person who engages in conduct in violation of this chapter shall be subject to the following penalties and/or remedies:

(1) Violations of this chapter may be punished as provided in the City of Tampa Code Section 1-6, General Penalty.

(2) Each calendar day that a violation continues after receipt of written notice of such violation shall constitute a separate violation and separate offense for purposes of the penalties and remedies specified herein.

(3) In addition to the penalties and remedies above, the city may institute any appropriate action or proceedings to prevent, restrain, correct or abate a violation of this chapter, as provided by law.

(b) Pursuant to chapter 5, the building official or designee is hereby authorized and empowered to use all applicable enforcement methods for any sign-related construction work found to be in violation of the City of Tampa Code.

(1) Any person violating the provisions of this chapter shall be required to pay a triple -permit fee in addition to other penalties specified herein.

(2) Any remedy or penalty specified in this chapter shall not be deemed to be an exclusive remedy and the building official is hereby expressly authorized and

empowered to enforce the provisions of this chapter as set forth below, and in any manner consistent with the City of Tampa Code or laws of the State of Florida.

(c) *Prosecution and penalties for civil infractions.* Any violation of section 27-289.4(b) or 27-28910 is hereby declared a civil infraction and may be brought before the County Court in and for Hillsborough County pursuant to and in accordance to the provisions of Chapter 23.5, City of Tampa Code. Such enforcement is supplemental to any other means of enforcement available to the city under this or any other section of the Code.

(1) *Civil penalty.* Any person or entity found in violation of sections 27-289.4(b) or 27-289.10 shall be subject to a civil penalty of no less that seventy-five dollars ($75.00) per violation, if not contested, but not to exceed two hundred fifty dollars ($250.00) for a first violation, and a civil penalty of no less than two hundred fifty dollars ($250.00) per violation, if not contested, but not to exceed five hundred dollars ($500.00) for a second or repeated violations. Community service hours shall not be substituted for payment of the monetary penalty.

(2) *Restitution.* The courts may order a violator, in addition to a civil penalty, to make restitution to the city for the damage or loss caused by the violator, which may include, but is not limited to any property damage caused by the placement or attachment of a sign or signs, the costs of any abatement action and court costs. Community service hours shall not be substituted for monetary restitution.

(d) *Removal by neighborhood improvement manager.* Any sign erected or maintained in violation of this Sign Code or erected in violation of any previously existing ordinance may be removed by the neighborhood improvement manager or designee at the expense of the owner of the property upon which the sign is located. If the sign violation discovered is on private property, then the neighborhood improvement manager or designee shall first give thirty (30) days written notice, by certified mail or hand delivery, to such person of the violation charged. If the sign is a temporary sign, the neighborhood improvement manager will follow the procedure set out below, except that all time frames will be five (5) calendar days rather than thirty (30) or fifteen (15) days.

(e) *Failure to pay.* A violator who fails to pay or request a hearing as provided in this Sign Code shall be deemed to owe a civil debt to the city which may be recovered with accrued interest by civil action in a court of competent jurisdiction.

Sec. 27-289.15. Billboard signs.

(a) *Billboard signs prohibited.* After the effective date of City of Tampa Ordinance No. 2000-206 [August 3, 2000], the erection of billboard signs is hereby prohibited for the purposes and reasons set forth in Section 1 of City of Tampa Ordinance No. 2000-206

which is incorporated herein by this reference, except as otherwise provided for in this section.

(b) *Definitions.*

(1) Approved settlement agreement. For purposes of this section, an approved settlement agreement means a fully executed and effective settlement agreement entered into between the city and a sign owner (or the owner's predecessor in interest) which resolved litigation relating to a variance or variance agreement granted by or entered into by the city prior to the effective date of City of Tampa Ordinance No. 2000-206 [August 3, 2000], including those approved by Resolution No. 2009-1128 and Resolution No. 2009-1129.

(2) *Designated roadways.* For purposes of this section, designated roadways shall be only:

1. FAP and FAI Roadways:

a. All of Interstate 275 and Interstate 4;

b. Property owned by the Hillsborough County Aviation Authority, the Tampa Sports Authority and the Hillsborough Community College through its Board of Trustees located and facing Dale Mabry Highway; and

c. Hillsborough Avenue from Veterans Expressway to Dale Mabry Highway;

2. Non-FAP and FAI Roadways:

a. Fowler Avenue from Interstate 275 to McKinley Street;

b. Busch Boulevard from Interstate 275 to 40th Street; and

c. The following roadways, and only the following roadways located within the Downtown Central Business District (as defined in Chapter 27, City of Tampa Code of Ordinances: (i) Channelside Drive from Adamo Drive to Florida Avenue; (ii) Tampa Street from I-275 to Lee Roy Selmon Expressway; (iii) Kennedy Boulevard from Florida Avenue to Meridian Street; and (iv) Florida Avenue from Tyler Street to Lee Roy Selmon Expressway.

Any portion of a designated roadway which is located within the Westshore Commercial Overlay District (as set forth in Chapter 27 City of Tampa Code of Ordinances) shall not be considered part of the designated

roadways for purposes of this section except that electronic billboard signs facing and servicing (i) Memorial Highway; (ii) the Veterans Expressway; and (iii) I-275 may be permitted.

(3) *Electronic billboard sign.* For purposes of this section, an electronic billboard sign is defined as a billboard sign that incorporates within or upon one (1) or more of its sign faces digital or other electronic changeable message technology and that allows advertising copy to be changed remotely rather than by changing the advertising copy on site with poster sheets or vinyl, and which meets the following criteria:

a. The electronic billboard sign face does not exceed six hundred seventy-two (672) square feet where located on an FAP, FAI or expressway or does not exceed four hundred (400) square feet where located anywhere else in the city; and

b. The electronic billboard is operated in compliance with section 27-289.15(d)(5), Operating standards.

Any billboard sign which has digital or other electronic changeable message technology, but does not comply with this definition of electronic billboard sign shall be deemed a prohibited sign.

(4) *Legally existing, billboard signs defined.* For purposes of this section, nonconforming billboard signs and variance signs, defined as follows, are legally existing, billboard signs.

(5) A nonconforming billboard sign is defined as:

a. Any billboard sign that was legally erected prior to the effective date of City of Tampa Ordinance No. 2000-206 [August 3, 2000] pursuant to a permit issued by the City of Tampa, except for any billboard signs that were erected prior to October 16, 1989 which signs were required to be made conforming or to be removed pursuant to section 27-289.15 of this Code; or

b. Any billboard sign that was legally erected before a permit was required by the city for off-site signs; but which billboard sign complies completely with the City of Tampa's off-site sign regulations that were in effect as of January 10, 2000; or

c. Any billboard sign erected prior to the effective date of City of Tampa Ordinance No. 2000-206 [August 3, 2000] which is subject to a variance granted by the city from any one (1) or more of the off-site sign

regulations in effect at the time of the variance, provided that said billboard sign conforms with the terms of the variance granted by the city; or

d. Any billboard sign erected after the effective date of City of Tampa Ordinance No. 2000-206 [August 3, 2000], that is the subject of, and is erected in strict accordance with an active permit issued by the city prior to the effective date of City of Tampa Ordinance No. 2000-206 [August 3, 2000]. No permits shall be issued for the erection of billboard signs after the effective date of City of Tampa Ordinance No. 2000-206 [August 3, 2000], except as otherwise provided for in this section 27-289.15.

(6) *Variance sign.* A variance sign is defined as any billboard sign erected prior to the effective date of City of Tampa Ordinance No. 2000-206 [August 3, 2000] which is the subject to a variance granted by the city from any one (1) or more of the off-site sign regulations in effect at the time of the variance, and/or any sign which is subject to an approved settlement agreement; provided that said billboard sign conforms with the terms of the approved settlement agreement. A variance sign does not include any billboard sign that is required to be removed in accordance with an approved settlement agreement and no variance sign shall be permitted to be upgraded pursuant to this section until such time that all billboard signs that are required to be removed pursuant to the approved settlement agreement are removed. A variance sign is a legal, conforming sign. Any variance sign which is upgraded to an electronic billboard sign shall be required to comply with the most restrictive requirements regulating to the placement, location, relocation, operation, materials and standards for the upgrade of a variance sign to an electronic billboard sign which are contained in either the approved settlement agreement or this section 27-289.15, herein.

Any billboard sign which does not constitute a nonconforming billboard sign or a variance sign, as described above, shall be deemed either a prohibited sign or an abandoned sign and shall be removed on or before February 1, 2003 as hereinafter provided. Nonconforming billboard signs shall be allowed to remain so long as such signs conform with the regulations set forth in this section 27-289.15 of the Code.

(c) *Standards pertaining to legally existing billboard signs.* Any legally existing billboard sign as described above shall be subject to the following standards:

(1) A legally existing billboard sign is allowed to contain noncommercial speech in lieu of any other speech.

"EXHIBIT A"

(2) Substitution or interchange of letters, poster panels, painted boards or demountable materials shall be permitted; provided that any such substitution or interchange shall not increase the size, shape, height or the number of sign faces of the sign, except as otherwise provided for in this section 27-289.15. A legally existing billboard sign may, without being defined as an electronic billboard sign, incorporate auxiliary changeable message technology to display not more than three (3) numeric digits provided that the size of such numeric display does not exceed five (5) percent of the sign face (e.g., a billboard sign advertising a lottery game that changes the payout amount from time to time based on tickets sold).

(3) Nonconforming billboard signs may be maintained and repaired, but shall not be structurally or mechanically extended or altered except as required by the building official of the city in cases where it has been determined by said building official that there exists an imminent danger to the public safety; provided, however, no structural change shall be permitted which would increase the height, size, shape or intensity of lighting of a nonconforming billboard sign except as provided for in this section 27-289.15.

(4) Any nonconforming billboard sign which is destroyed to the extent of seventy-five (75) percent of its current assessed value (based on the records of the Hillsborough County Property Appraiser) shall not be rebuilt or repaired, unless:

a. Within thirty (30) calendar days after the destruction of the nonconforming billboard sign, the owner of the sign files an application with the city clerk petitioning city council to allow the reconstruction and maintenance of the nonconforming billboard sign for a period not to exceed seven (7) years; and

b. The owner of the nonconforming billboard signs provides substantial and competent evidence to city council that: (i) the billboard sign was originally erected less than seven (7) years prior to the date on which the sign was destroyed; and (ii) the sign owner has failed to recoup the sign owner's investment in the nonconforming billboard sign as of the date of the sign's destruction. If such evidence is presented, the city council may allow the sign owner to rebuild or repair the nonconforming billboard sign and to maintain said sign for an additional period of time as determined by the city council in order to allow the sign owner time to recoup his or her investment; provided, however, such a period of time shall not exceed seven (7) years. At the conclusion of said period, the billboard sign shall be removed.

If the nonconforming billboard sign cannot be rebuilt or repaired, then the owner of the sign shall be responsible for removing all remaining portions of the sign structure within sixty (60) calendar days after the date of destruction of the billboard sign.

(5) Any nonconforming billboard sign which becomes an abandoned sign shall be removed.

(6) No nonconforming billboard sign shall be relocated except as provided in subsection 27-289.15(h) of this Code. In the event a legally existing, nonconforming billboard sign is relocated, the relocation of the sign shall not result in any increase in the size, height or number of sign faces of the nonconforming billboard sign.

(7) All nonconforming billboard signs shall be the subject of an operating permit issued in accordance with subsection 27-289.15 of this Code. Any nonconforming billboard sign which does not possess an annual operating permit in accordance with subsection 27-289.15 shall be deemed to constitute an abandoned sign.

(8) Nothing in this section shall affect the requirements of section 27-289.16 of the Code regarding the removal of all "off-site signs" in the designated view corridors and areas by a date certain as set forth in section 27-289.16 of the Code or the removal of any off-site or billboard signs pursuant to the terms of an approved settlement agreement or any variances previously granted by the city.

(9) Notwithstanding anything in this subsection (c) to the contrary, legally existing billboard signs may be upgraded to electronic billboard signs in accordance with subsection (d) below.

(d) *Upgrades to electronic billboard signs.* Nonconforming billboard signs and variance signs may be upgraded by the sign owner to an electronic billboard sign upon approval of a permit in accordance with section 27-289.2 of the Code. For each electronic billboard sign for which a sign permit is sought by the sign owner, the sign owner or the sign owner's agent, must submit a sign permit application demonstrating that each of the following conditions of approval have been met:

(1) *Exchange rate.*

a. A minimum of ten (10) sign faces of nonconforming billboard signs or variance signs must be permanently removed in exchange for each single sign face on an electronic billboard sign ("electronic billboard sign face") for which a sign permit is sought and approved by the city. In addition, the combined square footage of sign face area removed shall total at least ten

(10) times the square footage of the electronic billboard sign face for which the permit is sought.

b. The ten (10) sign faces used as trade-in exchange as provided in subsection a. above shall comply with the following additional criteria:

i. A minimum of four (4) sign faces (totaling at least four (4) times the square footage of the electronic billboard sign face) of nonconforming billboard signs or variance signs used as trade-in exchange must be from "billboard signs in place" at the time of the sign permit application and from a different location than the nonconforming billboard sign or variance sign to be upgraded. Banked credits (as defined in an approved settlement agreement) shall not be considered as billboard signs in place at the time of the sign permit application.

ii. No more than six (6) sign faces (totaling at least six (6) times the square footage of the electronic billboard sign face) of nonconforming billboard signs or variance signs to be removed may be satisfied by the removal of signs in place at the time of the sign permit application or through the use of any banked credits. A minimum of one (1) banked credit utilized for this subsection must have been accrued by the removal of a sign with a minimum of three hundred (300) square feet of sign face area.

iii. For a period of five (5) years beginning on the date of the issuance of the permit for the construction of the new electronic billboard sign, the owner of the electronic billboard sign may not construct a new sign face on the same roadway as the sign faces that are removed and used as trade-in exchange unless such sign face is located more than two thousand five hundred (2,500) feet from any of the sign faces that are removed and used for such trade-in exchange.

c. Notwithstanding anything to the contrary in subsection a. above, as an alternative to the exchange rate described above, a sign owner may permanently remove one (1) electronic billboard sign face in exchange for a new electronic billboard sign face at another location for which a sign permit is sought.

(2) *Location*. Each electronic billboard sign location must meet each of the following criteria:

a. The parcel upon which the electronic billboard sign is located must be assigned a zoning classification which is within a commercial or industrial district (as defined in this Article VI, Division 6).

b. The electronic billboard sign must be setback a minimum of seventy-five (75) feet from any parcel which is zoned or used for residential uses, as measured from the leading edge of the sign face closest to the residential parcel;

c. The electronic billboard sign shall not be located in any view corridors, as defined in this Article VI, Division 6;

d. The parcel upon which the electronic billboard sign must not be located within a historic district (as defined in Chapter 27);

e. The electronic billboard sign must not be located upon a parcel which contains a historically designated structure; and

f. The parcel upon which the electronic billboard sign is located must be adjacent to one (1) of the designated roadways with the electronic billboard sign being oriented towards and viewable from that designated roadway.

(3) *Lighting control and mitigation.* If a residential property is located within two hundred (200) feet of the base of a sign structure, the sign permit applicant must reduce light intensity on, or shade or shield the electronic billboard sign, or direct the lighting from such electronic billboard sign away from such residential property such that the lighting from the electronic billboard sign shall not result in a light intensity greater than three-tenths of one (0.3) foot-candle above ambient lighting, as measured at the property line of any residential property within two hundred (200) feet of the base of the sign structure. At the time of sign permit application, the sign owner applying for the sign permit for the electronic billboard sign shall submit a certification to the designated office of the city that this standard has been satisfied. As an alternative to compliance with the standards established in this subsection, the sign owner may provide at any time prior to the final inspection made pursuant to section 27-289.2 or any time thereafter a document signed by the affected landowner indicating that the landowner and the landowner's successors in interest waive the sign owner's compliance with this subsection. In the event of a waiver, a copy of the written waiver shall be filed with the permit application and compliance with this paragraph shall be measured from the line of the next adjacent residential property.

"EXHIBIT A"

(4) *Limits on total number of sign faces that may upgrade to electronic billboard signs*. Each sign owner that owns or controls nonconforming billboard signs or variance signs may upgrade its existing inventory to electronic billboard signs only within the following limitations on the total number of electronic billboard sign faces:

a. On FAP and FAI designated roadways: A maximum of five (5) percent of any single sign owner's existing inventory may be upgraded to electronic billboard sign faces. Provided, however, a single sign owner shall only have the right to upgrade its existing inventory to no more than ten (10) electronic billboard sign faces on FAP and FAI designated roadways.

b. On non-FAP and non-FAI designated roadways: A maximum of five (5) percent of any single sign owner's existing inventory may be upgraded to electronic billboard sign faces. Provided, however, a sign owner shall only have the right to upgrade its existing inventory to no more than four (4) electronic billboard sign faces on non-FAP and non-FAI designated roadways.

c. For the purposes of this section, existing inventory shall mean either:

i. The total number of variance signs owned or controlled by a single person or business entity as of the effective date of the applicable settlement agreement. The sign inventory approved in such settlement agreement shall establish the existing inventory for determining the number of digital sign face upgrades permitted for such initial inventory; or

ii. The total number of nonconforming signs owned or controlled by a single person or business entity as of the time the owner requests an upgrade to an electronic billboard sign in compliance with this section. In no event may the existing inventory of nonconforming signs contain variance signs.

(5) *Operational standards*.

a. *Spacing*. Electronic billboard signs shall be spaced a minimum of two thousand five hundred (2,500) feet from another electronic billboard sign measured linearly along the same side of the street.

b. *Dwell time and duration of message*. The dwell time, defined as the interval of change between each individual message, shall be consistent with rules promulgated by the Florida Department of Transportation but in

no event less than ten (10) seconds on FAP and FAI roadways or fifteen (15) seconds on non-FAP or non-FAI roadways. Any change of message shall be completed in two (2) seconds. The dwell time shall not include the time required to change a message. There shall be no special effects or other content between messages.

c. The message shall be static during the dwell time set forth in subsection (5)b. above. There shall be no flashing or varying light intensity or movement during the message. Messages shall not scroll and shall not give any appearance of moving, or in any way include active movement.

d. Each electronic billboard sign's operating system shall contain a light sensing device to adjust brightness as ambient light conditions change in order to insure that the message meets the following brightness standards. The maximum brightness shall be 0.3 foot-candles above the ambient light measured two hundred fifty (250) feet perpendicular from the face of the sign, or such less distance as may be required by section 27-289.15(d)(3).

e. No electronic billboard sign shall display light of such intensity that it interferes with the effectiveness of an official traffic sign, signal or device.

f. The electronic billboard sign shall have a default mechanism or setting that will cause the sign to turn off or freeze in one (1) position at a brightness no brighter than normal operation if a malfunction or failure (meaning any unintended interruption in message sequencing) occurs.

g. The electronic billboard sign shall not be configured to resemble a warning or danger signal nor shall there be any configuration which may a cause a driver to mistake the sign for a warning or danger sign. The sign shall not resemble or simulate any lights or official signage used to control traffic.

h. The electronic billboard sign operator may provide the city with space on the digital or electronic off-premise sign on a space-available basis for public service announcements, including Amber Alerts, hurricane evacuations, or other emergency situations and messages related to city-sponsored or co-sponsored events in order to provide for traffic management.

(e) *Annual operating permits for nonconforming billboard signs.* An operating permit shall be required for all nonconforming billboard signs. All operating permits shall be renewed on an annual basis. After February 1, 2003, any billboard sign other than a variance sign that does not possess a current operating permit shall be presumed to be either a

prohibited sign or an abandoned sign and shall be removed. The following requirements and procedure shall apply to the initial issuance of operating permits for nonconforming billboard signs:

(1) On or before December 31, 2002, all owners of any nonconforming billboard signs shall apply for an operating permit for each nonconforming billboard sign from the city. The application shall include the following information:

a. The name, telephone number and address of the owner of the nonconforming billboard sign;

b. The name and address of the owner of the parcel on which the sign is located;

c. The size and height of the sign;

d. A site plan, sketch or drawing of the parcel which accurately depicts the location of the sign; and

e. Evidence that the sign is a nonconforming billboard sign as described in subsection 27-289.15(b) above.

(2) After reviewing the operating permit application, if the city determines that the application is incomplete, the city shall notify the applicant in writing, and the applicant shall provide the city with all requested information on or before forty-five (45) calendar days after the date the city has requested such information from the applicant. For good cause shown by the applicant, the official may grant the applicant an additional period of time, not to exceed an additional ninety (90) calendar days, in order to provide all requested information in connection with the application.

(3) Provided that the application contains the information required above and evidences that the sign is a nonconforming billboard sign as described in subsection 27-289.15 the city shall issue an operating permit to the owner of the nonconforming billboard sign. The operating permit shall be renewed thereafter on an annual basis.

(4) If the city determines that a billboard sign does not meet the criteria for the issuance of an operating permit, the city shall issue a written denial of the permit application to the permit applicant setting forth the reason(s) for the denial of the operating permit. On or before thirty (30) calendar days after the date of the written denial of the operating permit, the owner of the billboard sign may file an appeal of the denial to city council by filing a notice of appeal with the city clerk.

The notice of appeal shall specify the grounds for the appeal, the relief desired, and applicable provisions of the Code.

(5) After February 1, 2003, any billboard sign, for which an operating permit is required and which has not been issued shall be cited by the city. Any billboard sign which does not possess an active operating permit required by this subsection by or at any time after February 1, 2003, shall be deemed either a prohibited billboard sign or an abandoned sign. In such an event, the city shall provide written notice to the owner of the parcel on which the sign is located (according to the most recent ad valorem tax rolls), and the owner of the sign, if that information is readily available in the city's permitting records, that unless a current operating permit is obtained from the city within sixty (60) calendar days, the billboard sign shall constitute an abandoned sign and must be immediately removed by the owner of the parcel or the sign owner.

(6) Upon the completion of an upgrade of any nonconforming billboard sign to an electronic billboard sign, the city shall issue a revised operating permit for the upgraded sign, reflecting the location and type of sign.

(7) Variance signs, including those variance signs which are electronic billboard signs, are not required to obtain or maintain an operating permit, or pay any fees applicable thereto.

(f) *Transfer of operating permit.* If the ownership of a nonconforming billboard sign is transferred, then the operating permit for that sign shall be transferred within thirty (30) calendar days after ownership of the sign is transferred by filing a "notification of transfer of an operating permit" with the city. The "notification of transfer of an operating permit" shall be executed by both the person or entity that currently holds the operating permit for the nonconforming billboard sign and the new owner of the nonconforming billboard sign.

(g) *Permit fees.* City council shall establish by separate resolution permit fees for, (i) the initial issuance of an operating permit for a nonconforming billboard sign, (ii) the annual renewal of an operating permit, and (iii) the transfer of an operating permit.

(h) *Relocation of nonconforming billboard signs.* No nonconforming billboard sign may be relocated unless one (1) of the following conditions exist or will occur as a result of the relocation:

(1) The relocation of the nonconforming billboard sign is expressly allowed by, and is made in accordance with, the terms of a variance granted by the city prior to the effective date of City of Tampa Ordinance No. 2000-206 [August 3, 2000]; or

(2) The nonconforming billboard sign is located on land which is being acquired for public right-of-way purposes as a part of a federal or state road, including, without limitation, the "federal-aid primary highway system," the "interstate highway system," and the "state highway system" as those terms are defined in F.S. § 479.01; and further provided that the sign owner, property owner, and the condemning authority elect in writing to relocate the nonconforming billboard sign in accordance with F.S. § 479.15, (1999). In such an event, the nonconforming billboard sign may be relocated in accordance with standards and requirements of F.S. § 479.15, (1999); provided, however, the applicant shall demonstrate to the city that the proposed relocation conforms completely with the requirements and standards contained in F.S. § 479.15, (1999). Further, no relocation shall be allowed on or in any of the view corridors or areas described in section 27-289.11 of the Code after February 11, 2004; and any billboard sign that is relocated in one (1) of the designated view or scenic corridors described in section 27-289.11(a) of the Code shall be removed on or before February 11, 2004. In the event that F.S. § 479.15, (1999), is later amended, revised, superseded or revoked, then the relocation of nonconforming billboard signs shall only be allowed or permitted in accordance with such amendments, revisions or superseding statutes enacted by the Florida Legislature.

In addition to satisfying one (1) of the foregoing conditions, no relocation shall occur until the nonconforming billboard sign being relocated has been removed.

(i) [Relocation of variance signs.] Relocation of any variance sign shall be in accordance with the applicable approved settlement agreement, except as provided in section 27-289.15(b)(6). In the event that any provision of this section or the Code conflicts in any manner with an approved settlement agreement, the provisions of the approved settlement agreement shall control and prevail except as provided for in section 27-289.15(b)(6).

Sec. 27-289.16. - View corridors.

(a) The following are designated as "view corridors" in the city:

(1) Kennedy Boulevard from its point of intersection with I-275 on the west to its point of intersection with the Hillsborough River on the east, at a width of two hundred fifty (250) feet in each direction measured from the centerline of Kennedy Boulevard.

(2) MacDill Avenue from its point of intersection with West De Leon Street on the north to its point of intersection with West Bay Haven Drive to the south, at a

width of two hundred fifty (250) feet in each direction measured from the centerline of MacDill Avenue.

(3) Within the boundaries of the Central Business District as established by section 27-181(a) herein.

(4) Within the boundaries of the Hyde Park Historic District, as established by City of Tampa Ordinance No. 88-199.

(5) Within the boundaries of the Ybor City Historic District, as established by section 27-177(b) herein.

(6) Florida Avenue from its point of intersection with Humphrey Street on the south to approximately three-tenths (3/10) mile north of its intersection with Busch Boulevard, at a width of two hundred fifty (250) feet in each direction measured from the centerline of Florida Avenue.

(b) Removal of off-site signs and billboards located in the designated view corridors:

(1) Off-site and billboard signs legally erected and located within the above referenced view corridors in accordance with a permit issued prior to April 4, 1996, and which are specifically identified in 2.b. of those certain Variance Agreements entered into by the City of Tampa and by National Advertising Company and the 3M Company and by Eller Media (a/k/a Patrick Media Group, Inc.) on or about April 4, 1996, may remain at their approved locations until February 11, 2004, after which said signs shall be subject to the prohibitions set forth in subsection (a) above and shall be immediately removed.

(2) Off-site and billboard signs legally erected and located within the above referenced view corridors in accordance with a permit issued after April 4, 1996 and prior to February 11, 1999 may remain at their approved locations until February 11, 2004, after which said signs shall be subject to the prohibitions set forth in subsection (a) above and shall be immediately removed, provided however, if said sign(s) permit(s) is determined to be invalid pursuant to an Official Decision of the City of Tampa made pursuant to Section 1-19 of the City of Tampa Code or by a court of competent jurisdiction, then said sign(s) shall be subject to the prohibitions set forth in subsection (a) above and shall be immediately removed.

(3) Off-site and billboard signs proposed to be located within the above referenced view corridors for which a permit was applied for prior to February 11, 1999, but issued subsequent thereto, provided such permit was subsequently issued pursuant to an Official Decision of the City of Tampa made pursuant to Section 1-19 City

of Tampa Code or by a court of competent jurisdiction, may be erected at the location identified in the application, and may remain at said location for a period of five (5) years from the date of the permit, after which said signs shall be subject to the prohibitions set forth in subsection (a) above and shall be immediately removed.

(4) Variance signs located within the above referenced view corridors which are not identified for removal in an approved settlement agreement may remain at their approved locations in accordance with the approved settlement agreement and shall be subject to the provisions of section 27-289.15, including any standards for upgrading to an electronic billboard sign.

(c) Upon failure to comply with the dates specified herein for sign removal, the neighborhood improvement manager is hereby authorized to cause removal of such sign, and any expense incident thereto shall be paid by the owner, agent or lessee of the sign or by the owner or lessee of the property upon which the sign is located.

(d) Notwithstanding any other code provision to the contrary, neither the city council nor any board of the city may grant a variance from the prohibitions set forth in subsection (a) above.