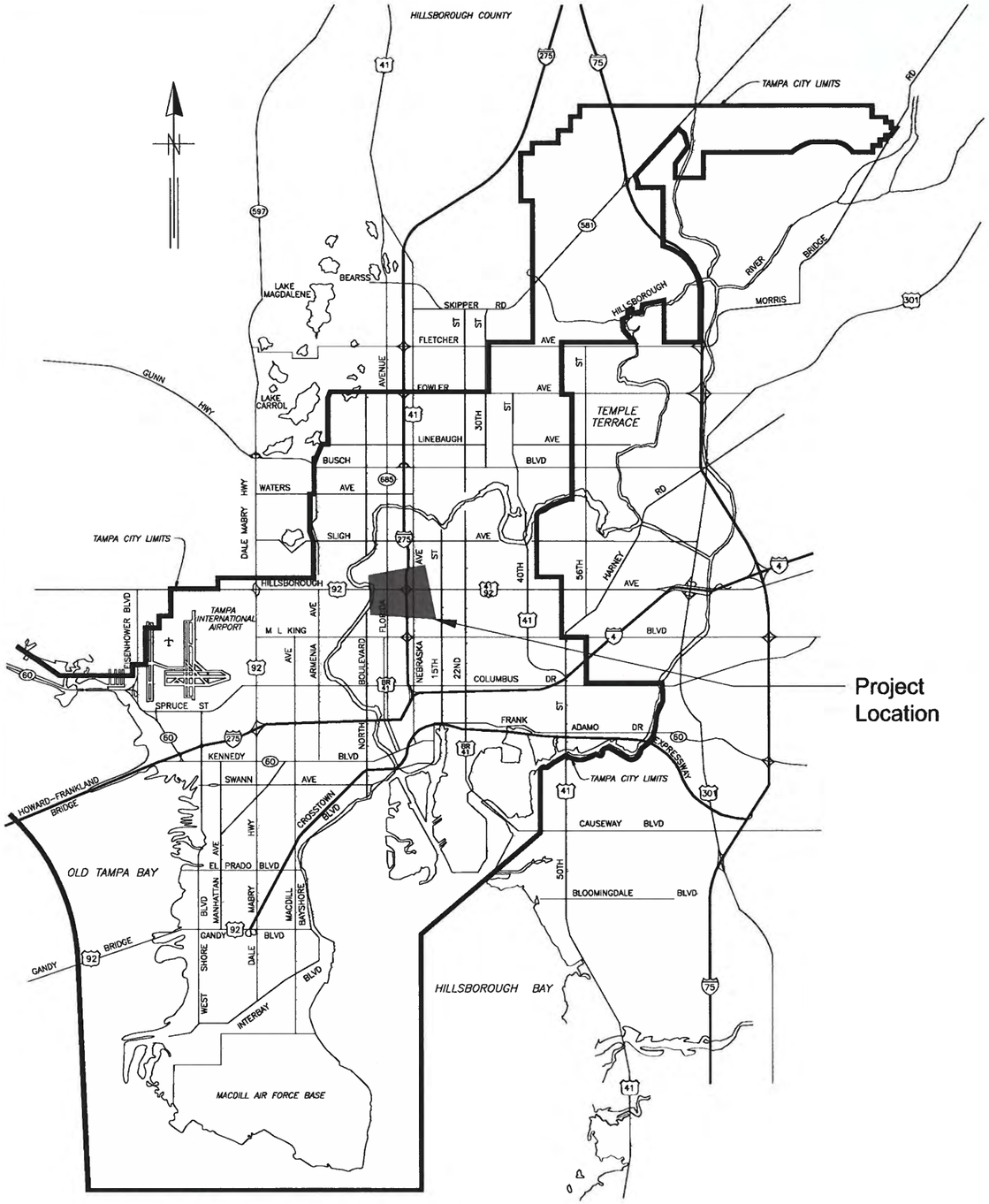

VICINITY MAP

CITY of TAMPA

Department of Transportation and Stormwater Services
Stormwater Engineering Division

SOUTHEAST SEMINOLE HEIGHTS FLOOD RELIEF N949

NOT FOR CONSTRUCTION
CONCEPTUAL

DES:	CITY of TAMPA	SOUTHEAST SEMINOLE HEIGHTS	SHEET
DRN:	Department of Transportation and Stormwater Services	FLOOD RELIEF N949	1
CKD:	Stormwater Engineering Division	COVER	OF 49
DATE: 9/05/18			

LEGEND

	EXISTING	PROPOSED
COT STORMWATER PIPES 18" & SMALLER		
COT STORMWATER PIPES 24" & LARGER		
COT STORMWATER MANHOLES	S	S
COT STORMWATER INLETS		
WASTEWATER PIPES & MANHOLES		
WATER PIPES		WM WM
PROP. FDOT STORM PIPES & MANHOLES		

TABLE OF CONTENTS

SHEET	TITLE
1	COVER SHEET
2	GENERAL NOTES & LEGEND
3	KEY SHEET
4–6	TYPICAL SECTIONS
7–49	PLAN & PROFILE SHEETS

GENERAL NOTES

1. Elevations based on National American Vertical Datum of 1988 (NAVD–1988). Topographic information derived from Digital Elevation Model (DEM) based on LiDAR from the Florida Division of Emergency Management (FDEM). All elevations should be considered approximate.

2. No site specific survey was conducted to prepare these plans. All locations, depths, sizes, and materials should be considered approximate.

3. No engineering calculations were performed for proposed local drainage features. These drawings only show that the existing inlets are to be reconnected to proposed pipes. During the formal design, the engineer shall observe all the streets along the route during or shortly after rain events and identify locations of standing water. The engineer will design the local drainage systems and determine if re–profiling and additional and replacement inlets are needed.

4. All feature locations shown are approximate.

5. Locations, elevations, and dimensions of the existing utilities, structures and other features are shown according to As–Builts and available GIS Atlas information at the time of the preparation of these plans and do not purport to be absolutely correct.

6. No engineering calculations were performed for adjustment of existing or proposed utilities (stormwater, water, reclaimed water, sanitary, gas, etc). Locations of all utilities shall be performed during the formal design phase.

7. All wastewater pipes, laterals and clean outs that cannot be protected shall be replaced to current technical standards. This will be funded by the project. The Wastewater Department has not elected to upsize any pipes.

8. All water pipes, services and meters that cannot be protected shall be replaced to current technical standards. This will be funded by the project. The Water Department has elected to upsize some pipes within the project limits. Both the design and construction of this upsizing will be funded by the Water Department rather than the project. The engineer shall coordinate this during the formal design process.

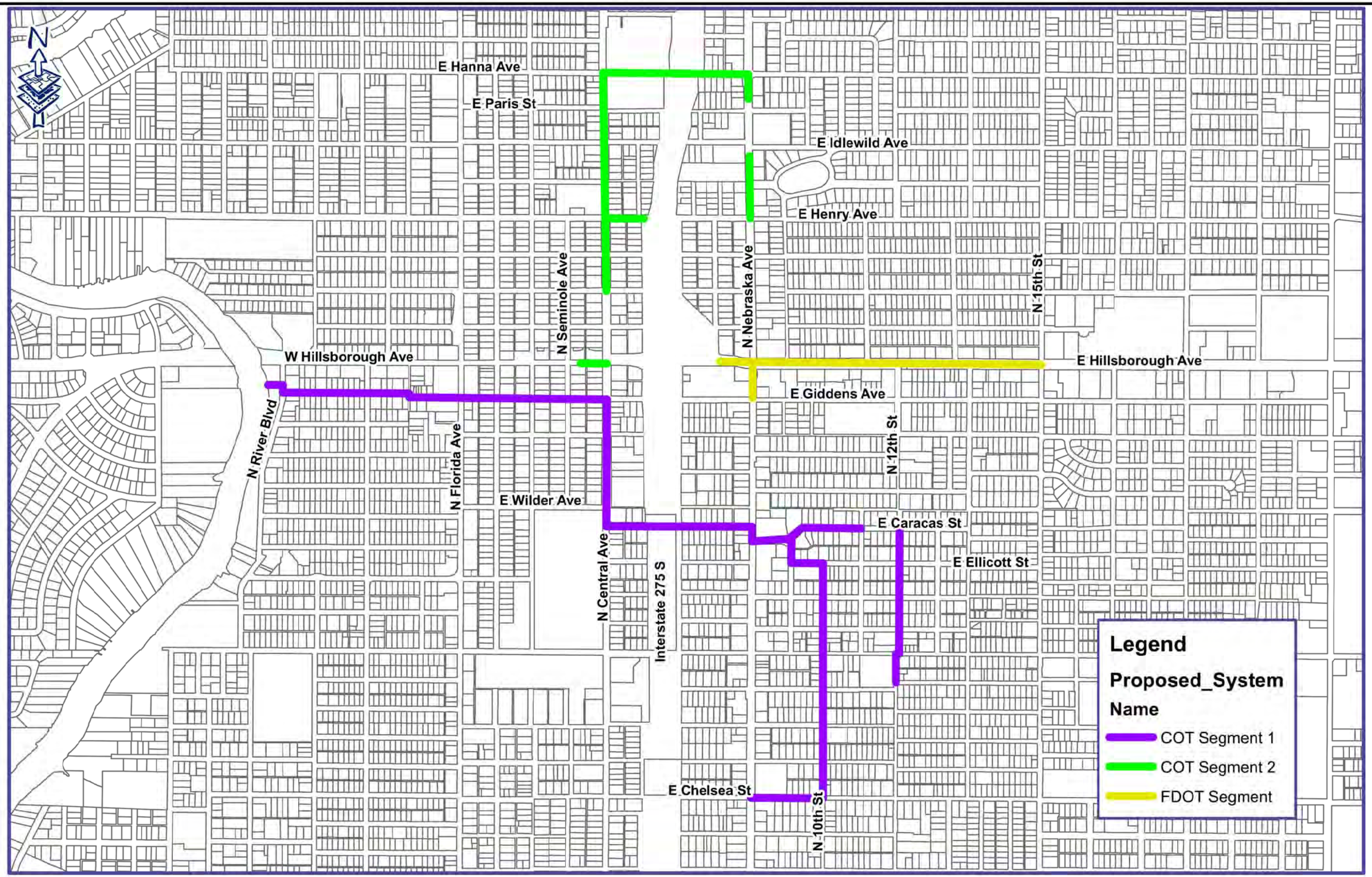

NOT FOR CONSTRUCTION
CONCEPTUAL

DES:
DRN:
CKD:
DATE: 9/05/18

CITY of TAMPA
Department of Transportation and Stormwater Services
Stormwater Engineering Division

SOUTHEAST SEMINOLE HEIGHTS
FLOOD RELIEF N949
KEY SHEET

SHEET **3** OF 49

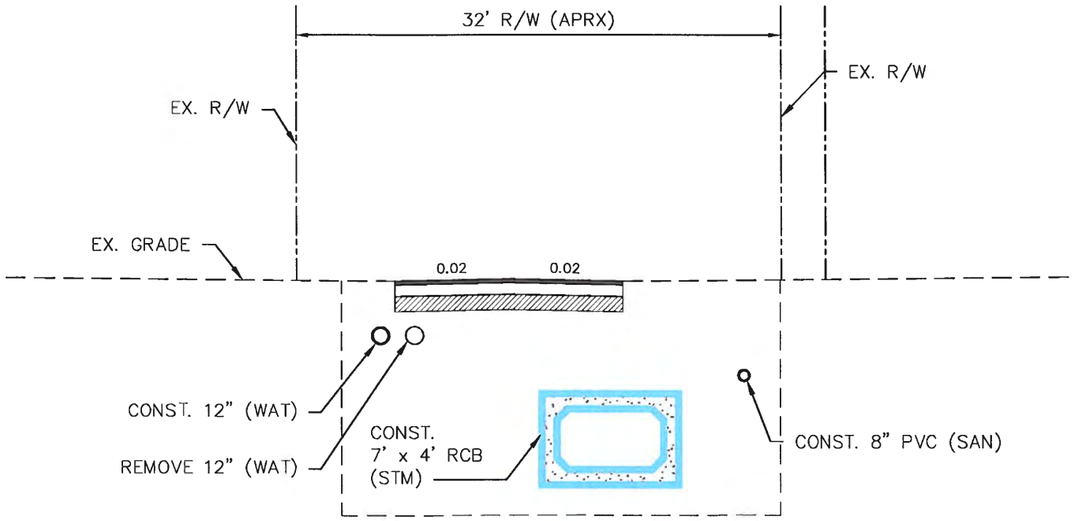

TYPICAL SECTION
GIDDENS 23+20 TO 27+50
(NTS)

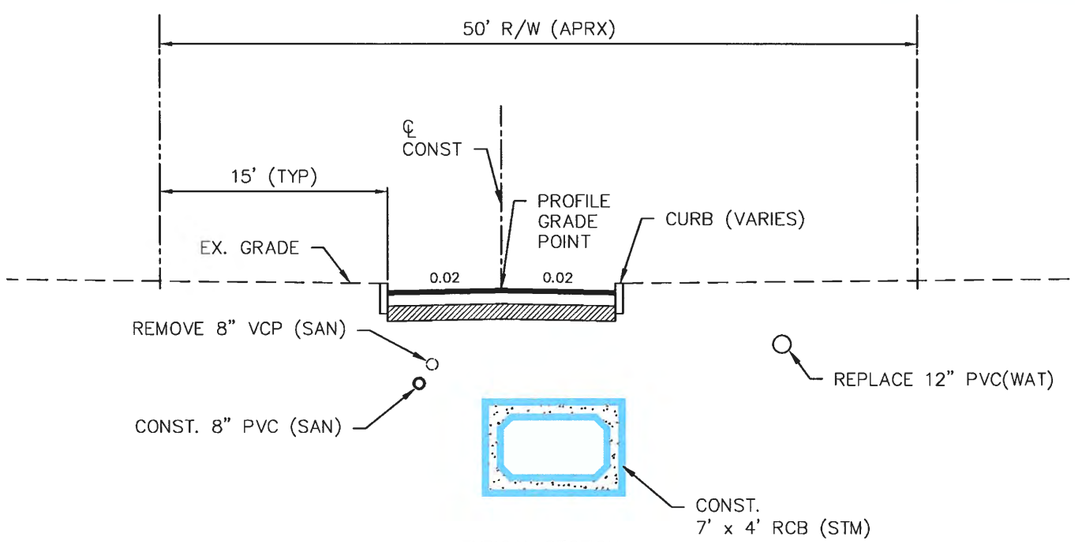

TYPICAL SECTION
GIDDENS 12+00 TO 23+00
(NTS)

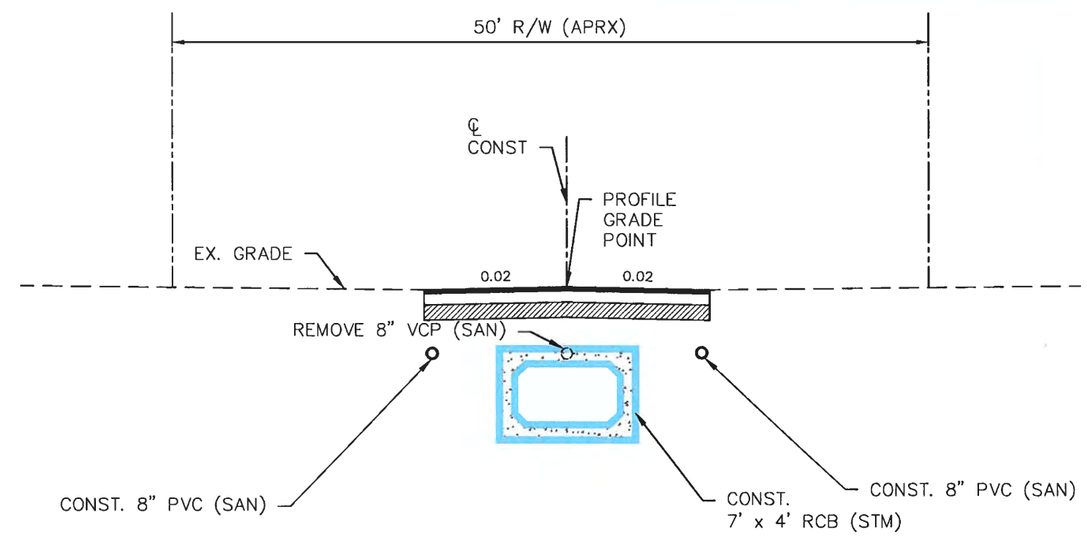

TYPICAL SECTION
GIDDENS 28+50 TO 41+00
(NTS)

NOT FOR CONSTRUCTION
CONCEPTUAL

DES:
DRN:
CKD:
DATE: 9/05/18

CITY of TAMPA
Department of Transportation and Stormwater Services
Stormwater Engineering Division

SOUTHEAST SEMINOLE HEIGHTS
FLOOD RELIEF N949
TYPICAL SECTION 1

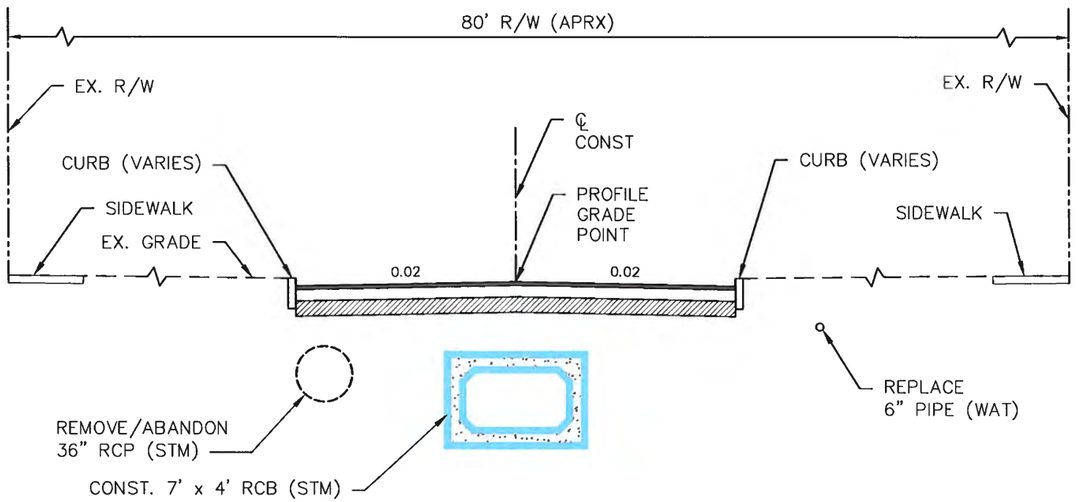

TYPICAL SECTION
CENTRAL 11+00 TO 17+50
(NTS)

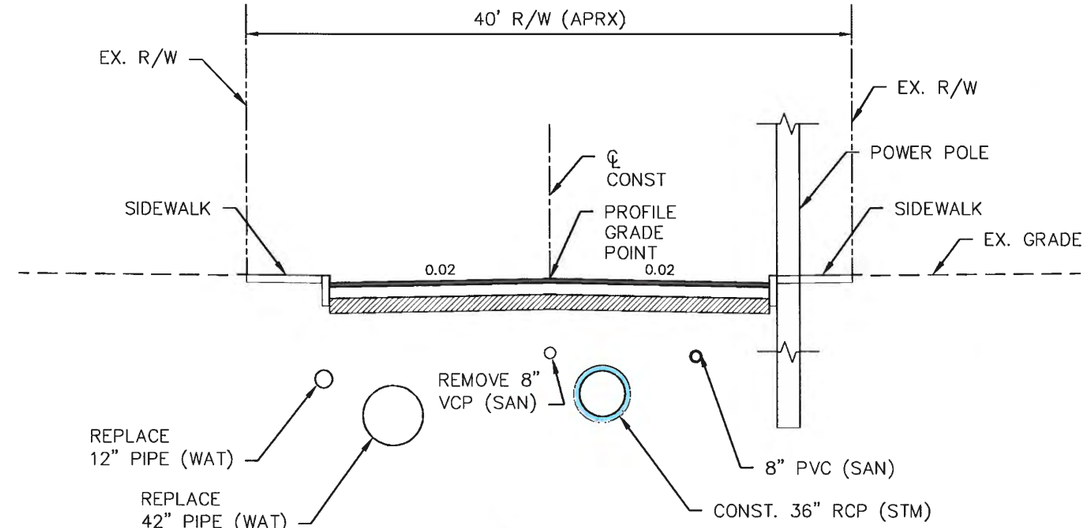

TYPICAL SECTION
HANNA 21+00 TO 33+00
(NTS)

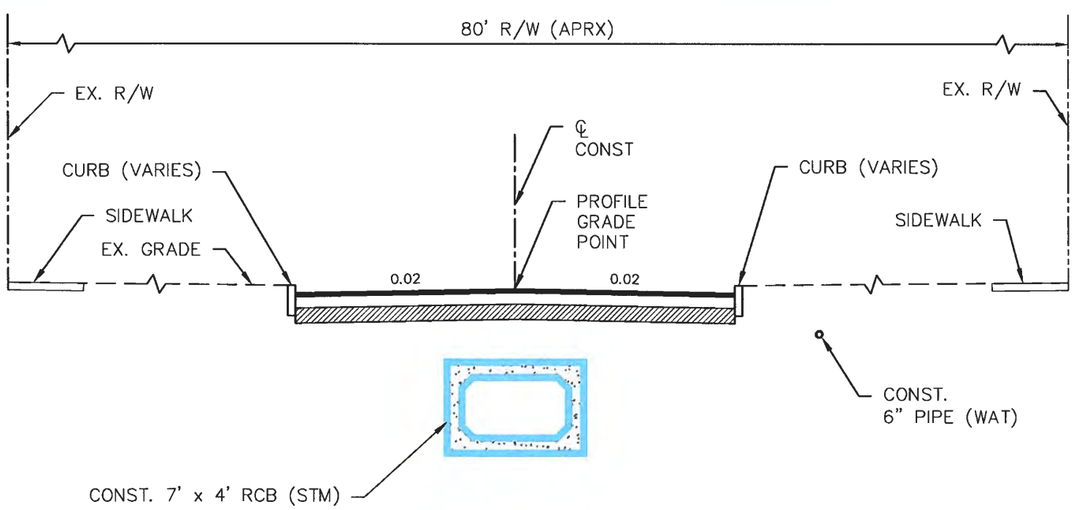

TYPICAL SECTION
CENTRAL 40+00 TO 54+00
(NTS)

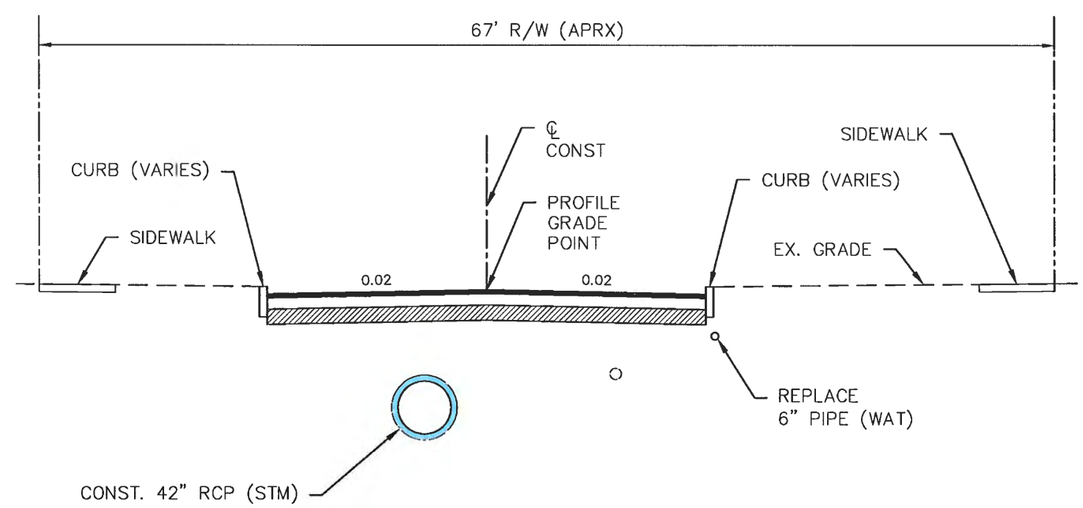

TYPICAL SECTION
CENTRAL 18+00 TO 31+50
(NTS)

NOT FOR CONSTRUCTION
CONCEPTUAL

DES:
DRN:
CKD:
DATE: 9/05/18

CITY of TAMPA
Department of Transportation and Stormwater Services
Stormwater Engineering Division

SOUTHEAST SEMINOLE HEIGHTS
FLOOD RELIEF N949
TYPICAL SECTION 2

SHEET 5 OF 49

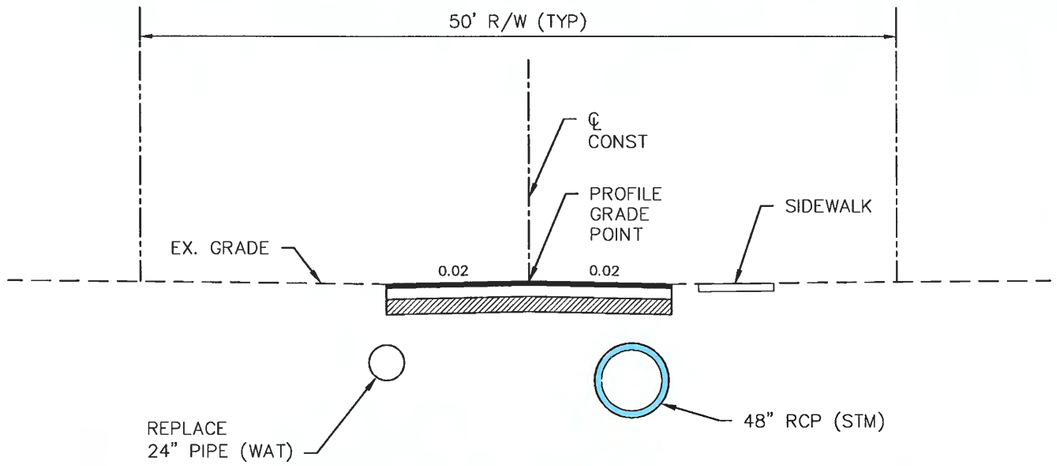

TYPICAL SECTION
12TH 16+50 TO 27+50
(NTS)

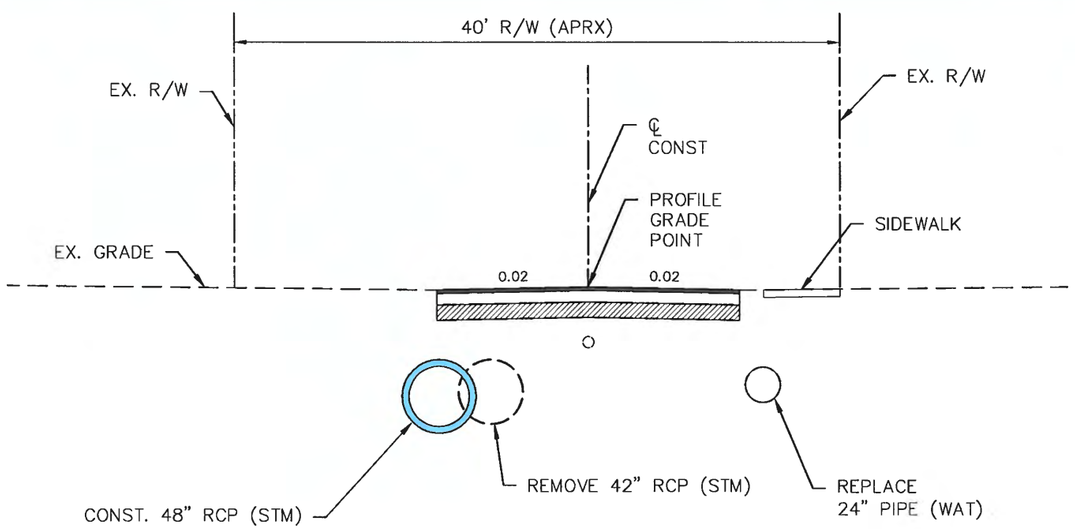

TYPICAL SECTION
12TH 13+50 TO 15+50
(NTS)

NOT FOR CONSTRUCTION
CONCEPTUAL

DES:
DRN:
CKD:
DATE: 9/05/18

CITY of TAMPA
Department of Transportation and Stormwater Services
Stormwater Engineering Division

SOUTHEAST SEMINOLE HEIGHTS
FLOOD RELIEF N949
TYPICAL SECTION 3

SHEET 6 OF 49

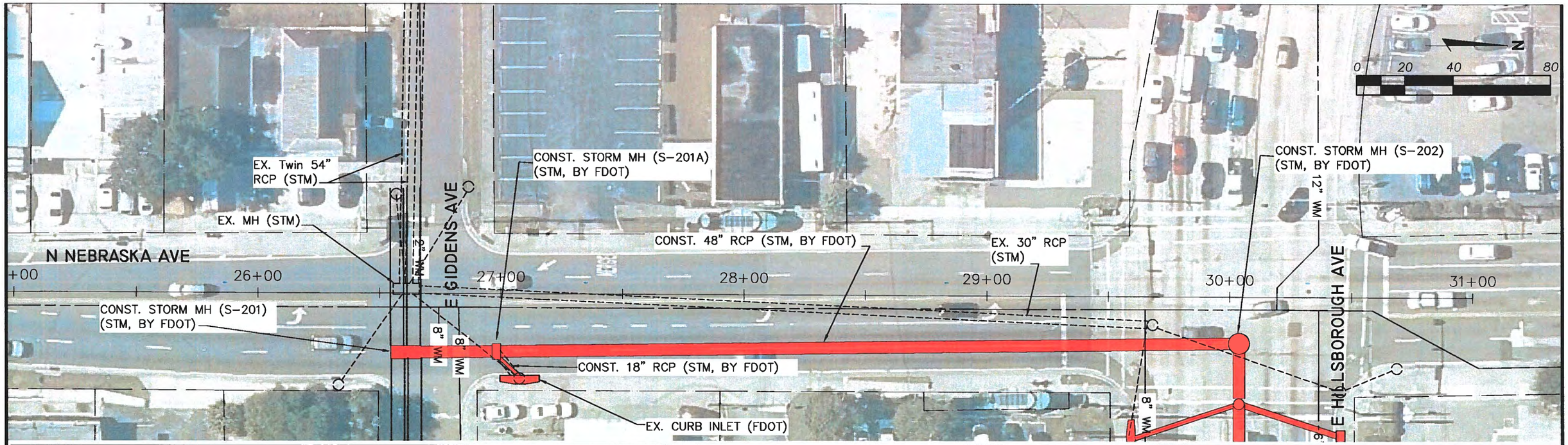

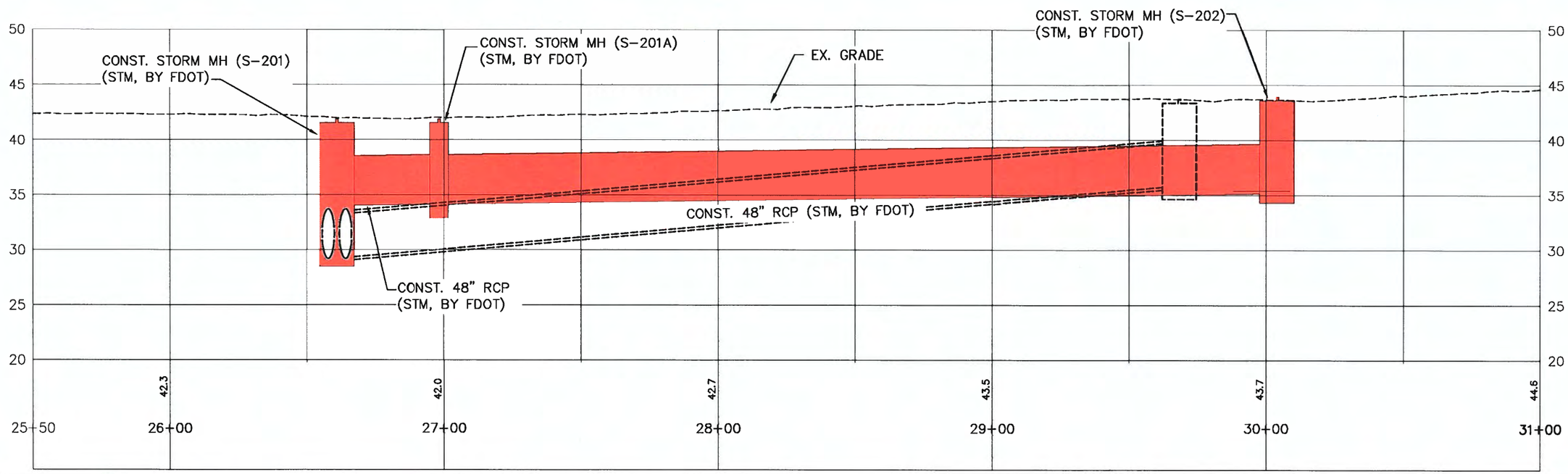

NOT FOR CONSTRUCTION
CONCEPTUAL

DES:
DRN:
CKD:
DATE: 9/05/18

CITY of TAMPA
Department of Transportation and Stormwater Services
Stormwater Engineering Division

SOUTHEAST SEMINOLE HEIGHTS FLOOD RELIEF N949

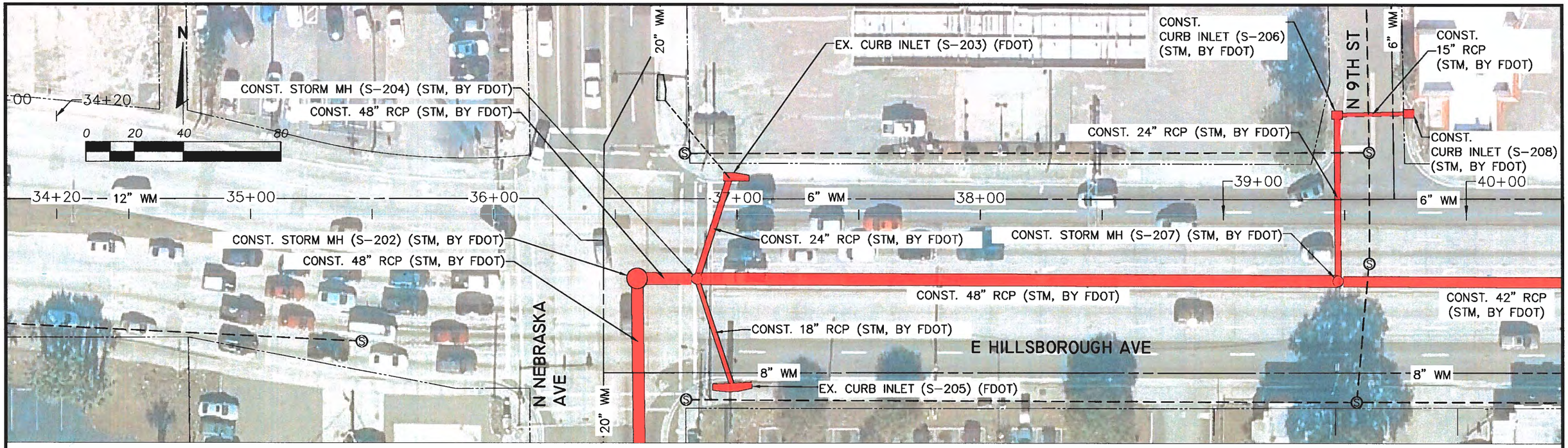

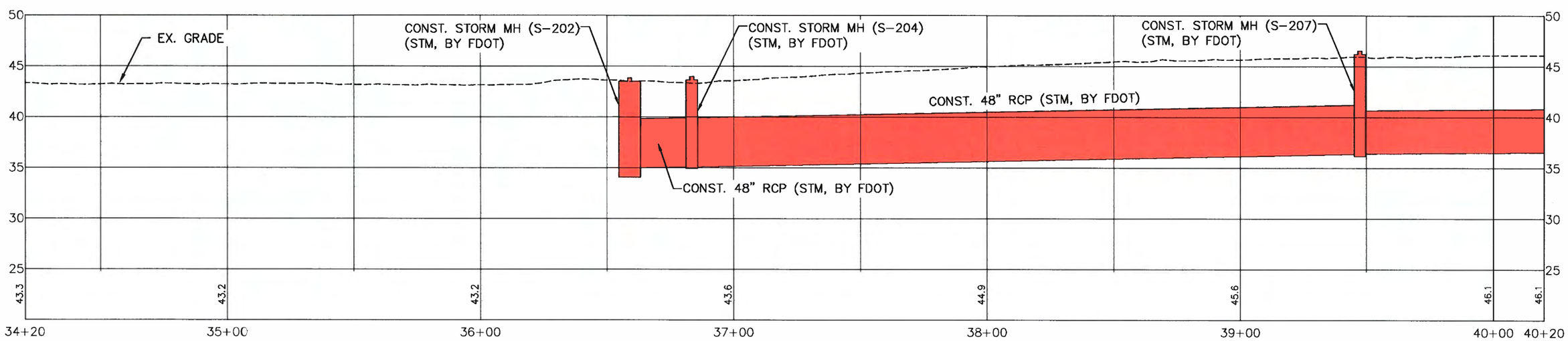

NOT FOR CONSTRUCTION
CONCEPTUAL

DES:
DRN:
CKD:
DATE: 9/05/18

CITY of TAMPA
Department of Transportation and Stormwater Services
Stormwater Engineering Division

SOUTHEAST SEMINOLE HEIGHTS
FLOOD RELIEF N949

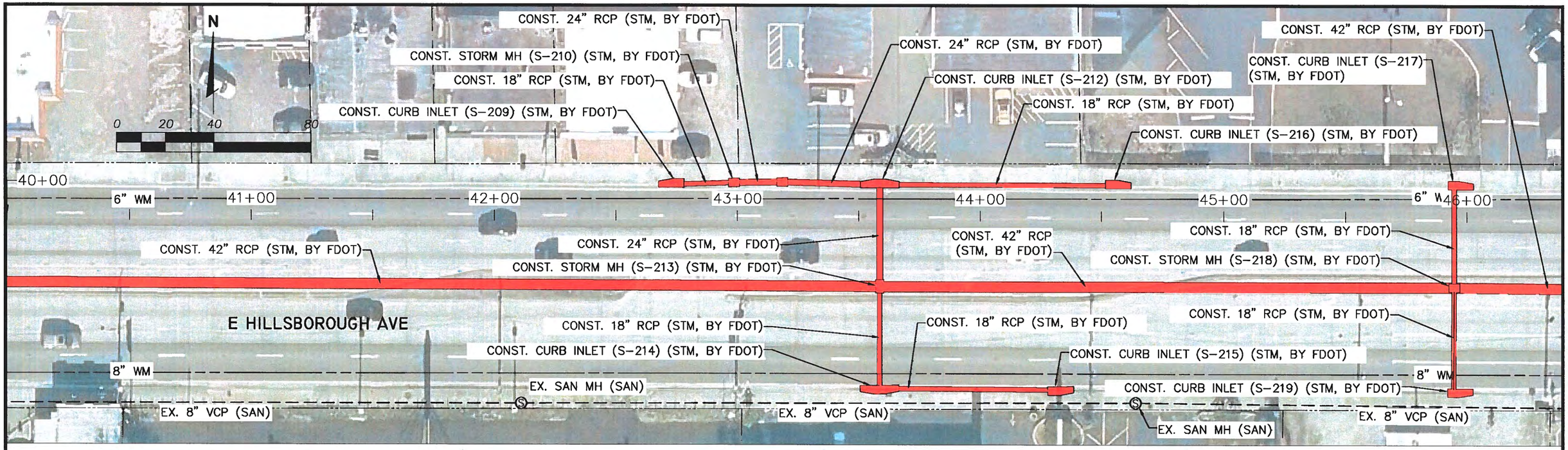

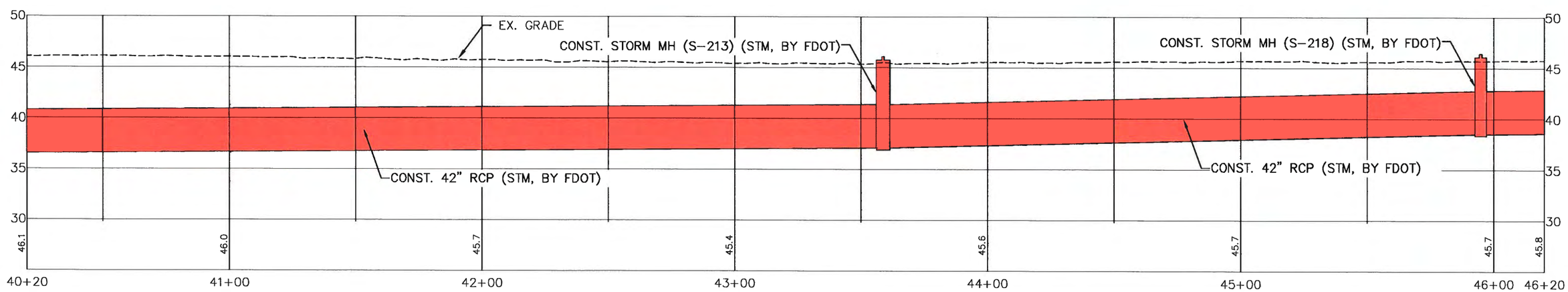

NOT FOR CONSTRUCTION
CONCEPTUAL

DES:
DRN:
CKD:
DATE: 9/05/18

CITY of TAMPA
Department of Transportation and Stormwater Services
Stormwater Engineering Division

SOUTHEAST SEMINOLE HEIGHTS
FLOOD RELIEF N949

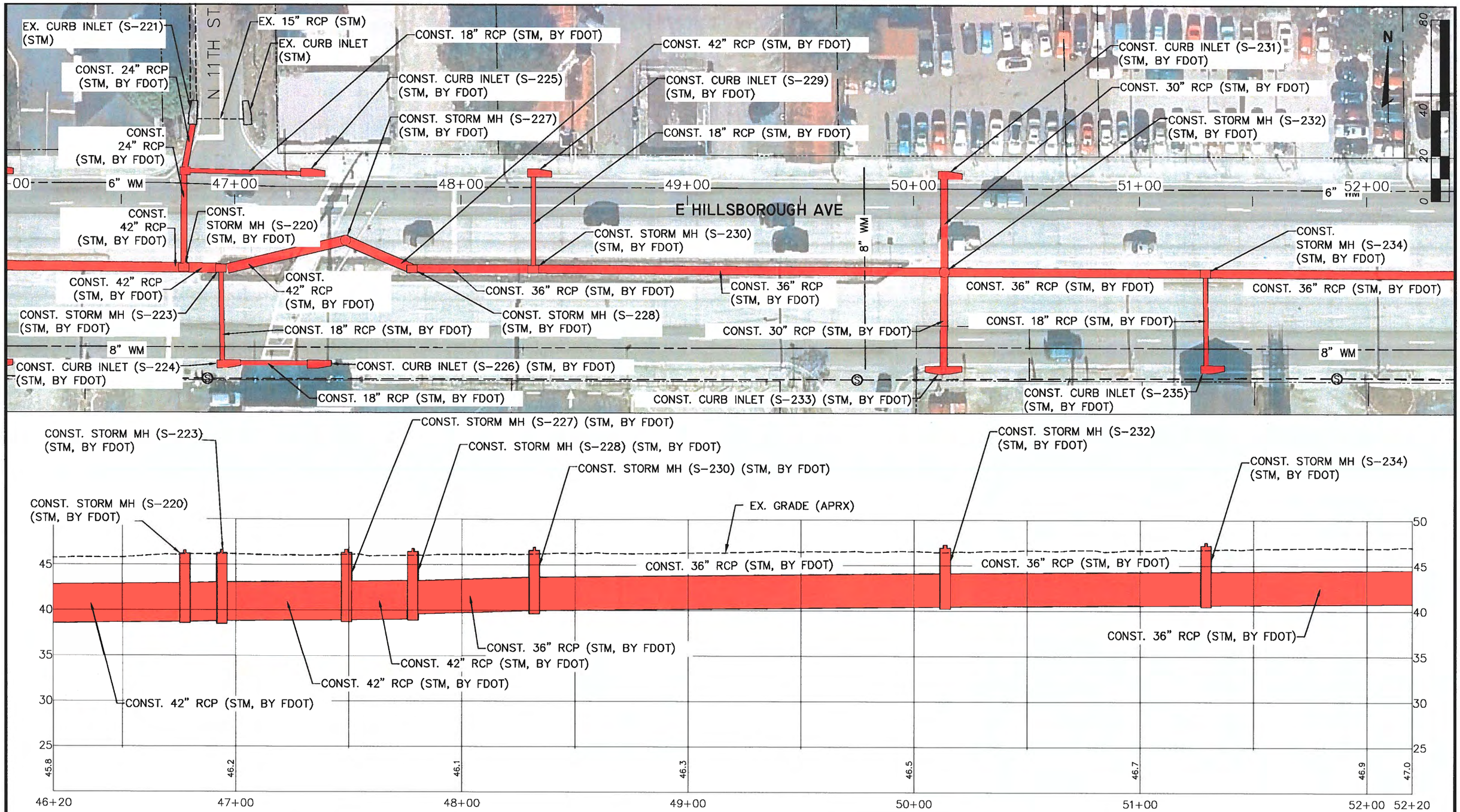

NOT FOR CONSTRUCTION
CONCEPTUAL

DES:
DRN:
CKD:
DATE: 9/05/18

CITY of TAMPA
Department of Transportation and Stormwater Services
Stormwater Engineering Division

SOUTHEAST SEMINOLE HEIGHTS
FLOOD RELIEF N949

SHEET 10 OF 49

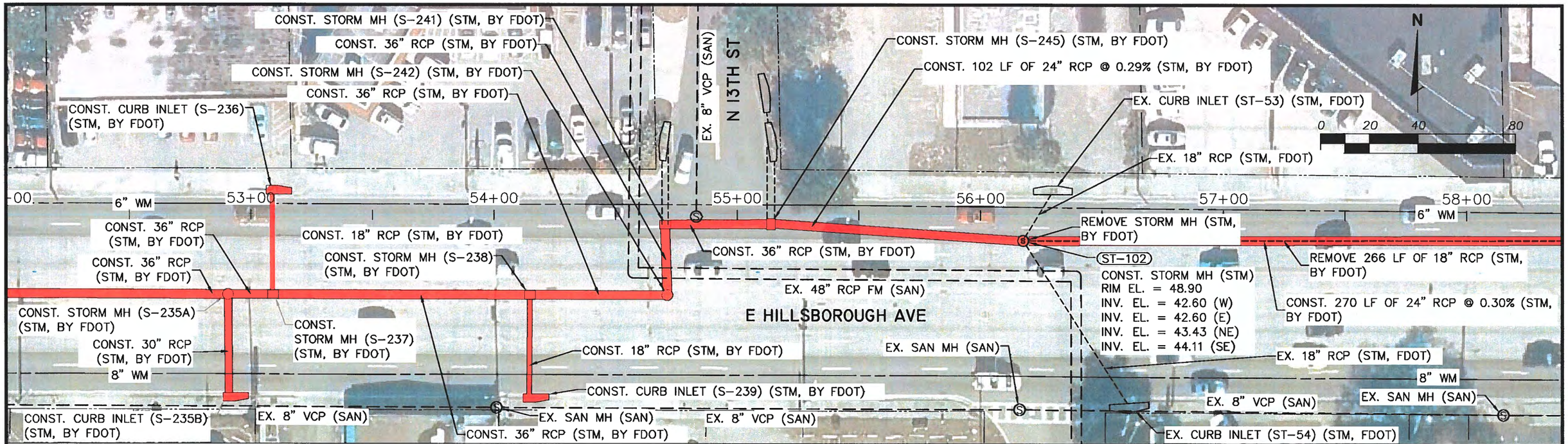

NOT FOR CONSTRUCTION
CONCEPTUAL

DES:
DRN:
CKD:
DATE: 9/05/18

CITY of TAMPA
Department of Transportation and Stormwater Services
Stormwater Engineering Division

SOUTHEAST SEMINOLE HEIGHTS
FLOOD RELIEF N949

SHEET 11 OF 49

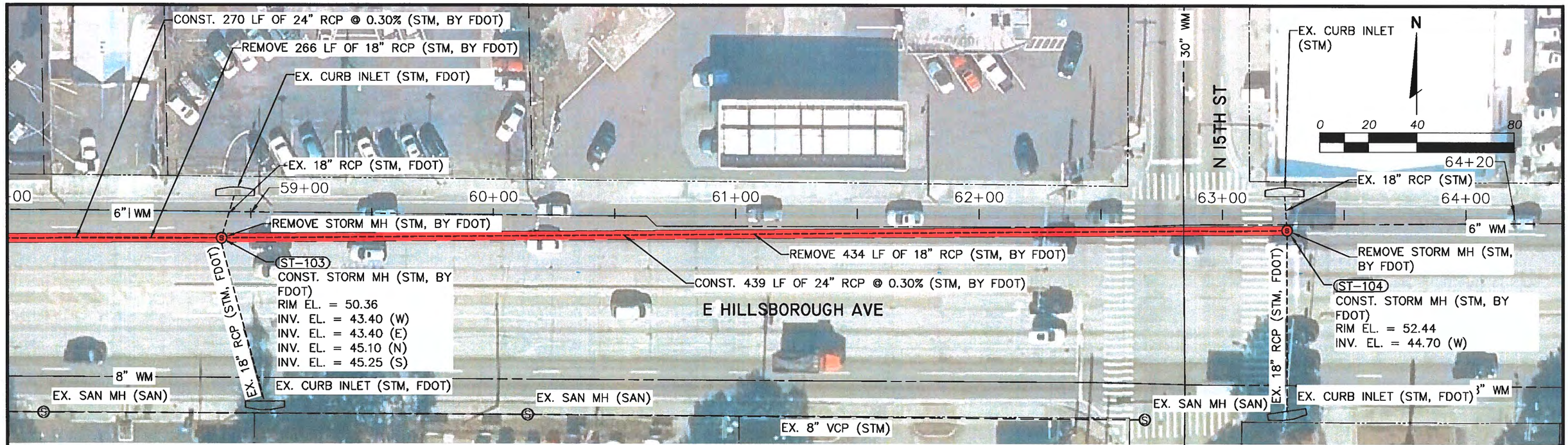

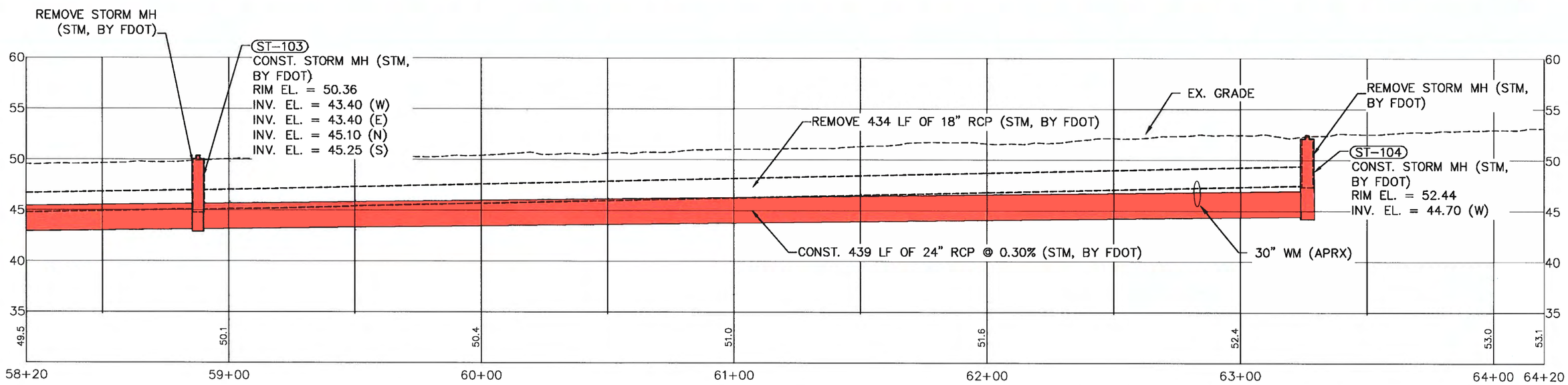

NOT FOR CONSTRUCTION
CONCEPTUAL

DES:
DRN:
CKD:
DATE: 9/05/18

CITY of TAMPA
Department of Transportation and Stormwater Services
Stormwater Engineering Division

SOUTHEAST SEMINOLE HEIGHTS
FLOOD RELIEF N949

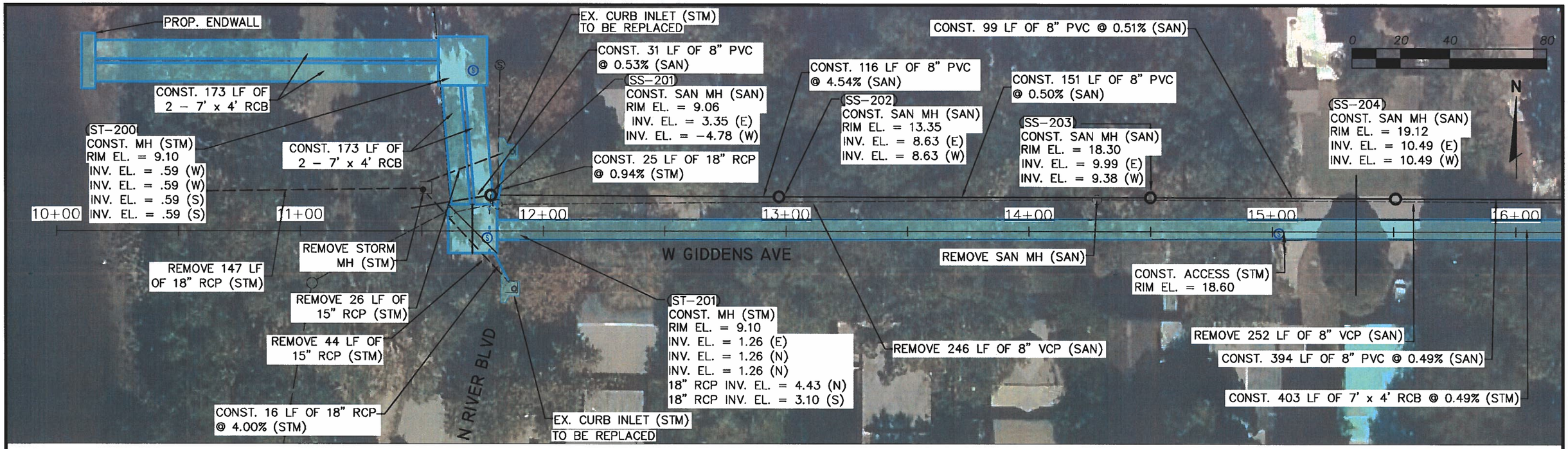

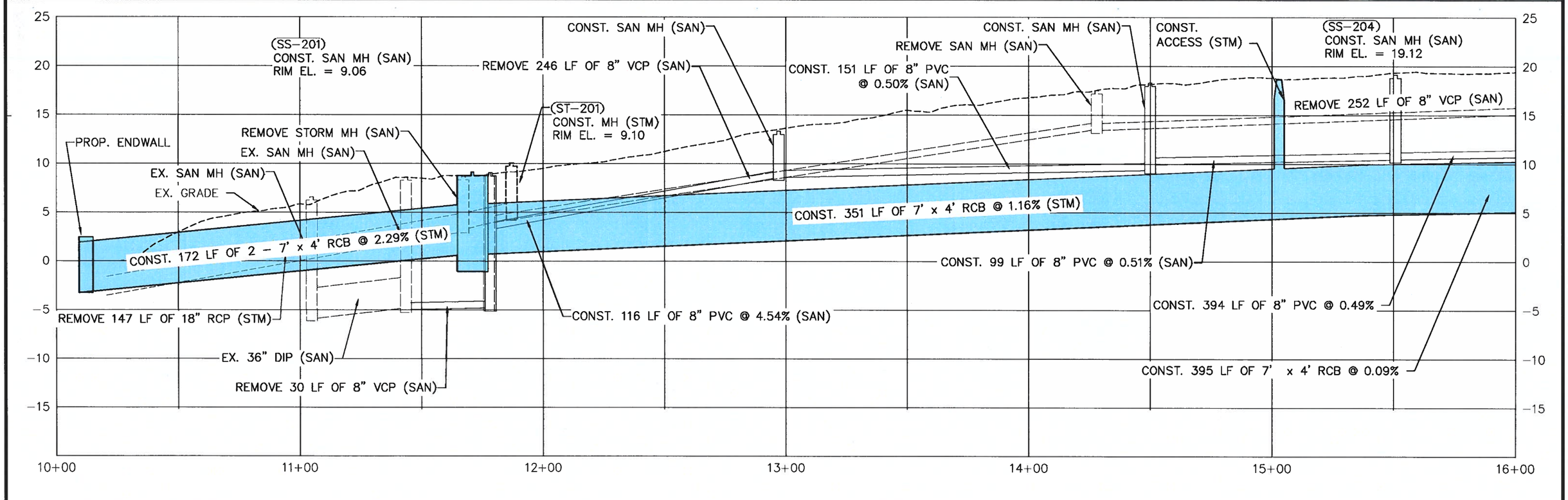

NOT FOR CONSTRUCTION
CONCEPTUAL

DES:
DRN:
CKD:
DATE: 9/05/18

CITY of TAMPA
Department of Transportation and Stormwater Services
Stormwater Engineering Division

SOUTHEAST SEMINOLE HEIGHTS
FLOOD RELIEF N949

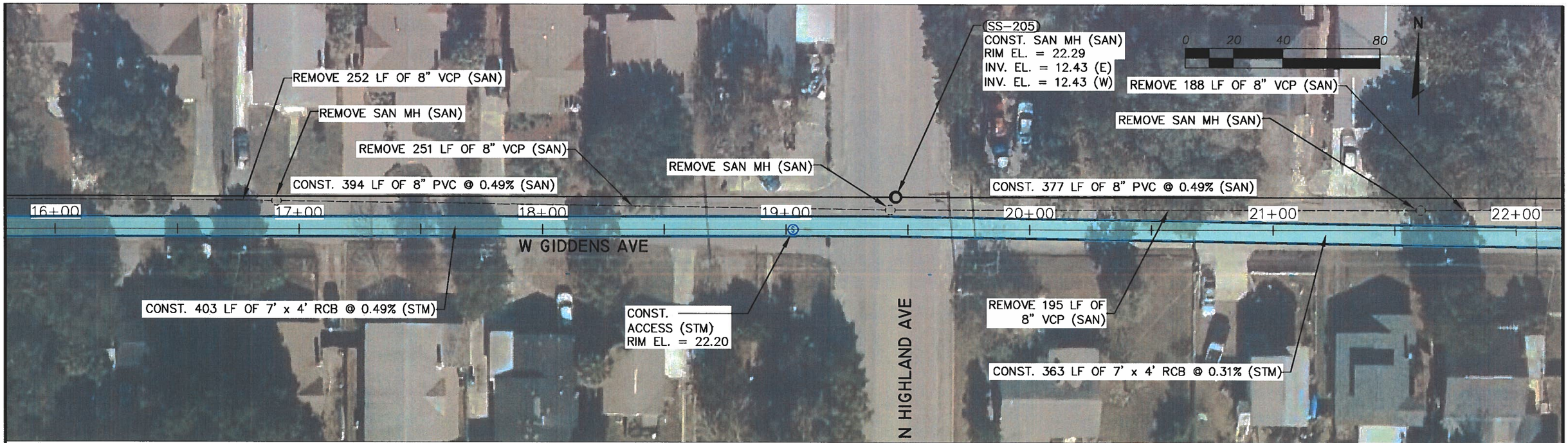

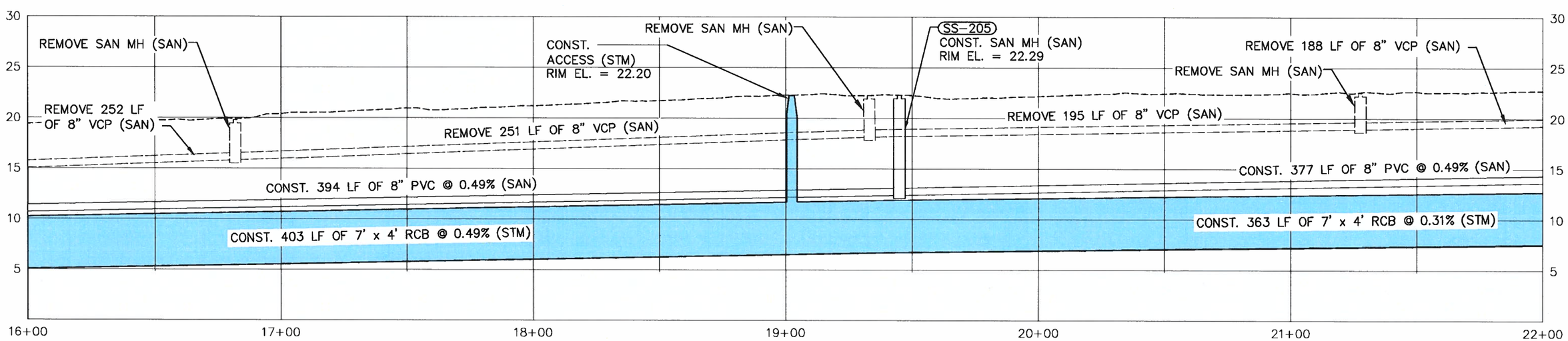

NOT FOR CONSTRUCTION
CONCEPTUAL

DES:
DRN:
CKD:
DATE: 9/05/18

CITY of TAMPA
Department of Transportation and Stormwater Services
Stormwater Engineering Division

SOUTHEAST SEMINOLE HEIGHTS
FLOOD RELIEF N949

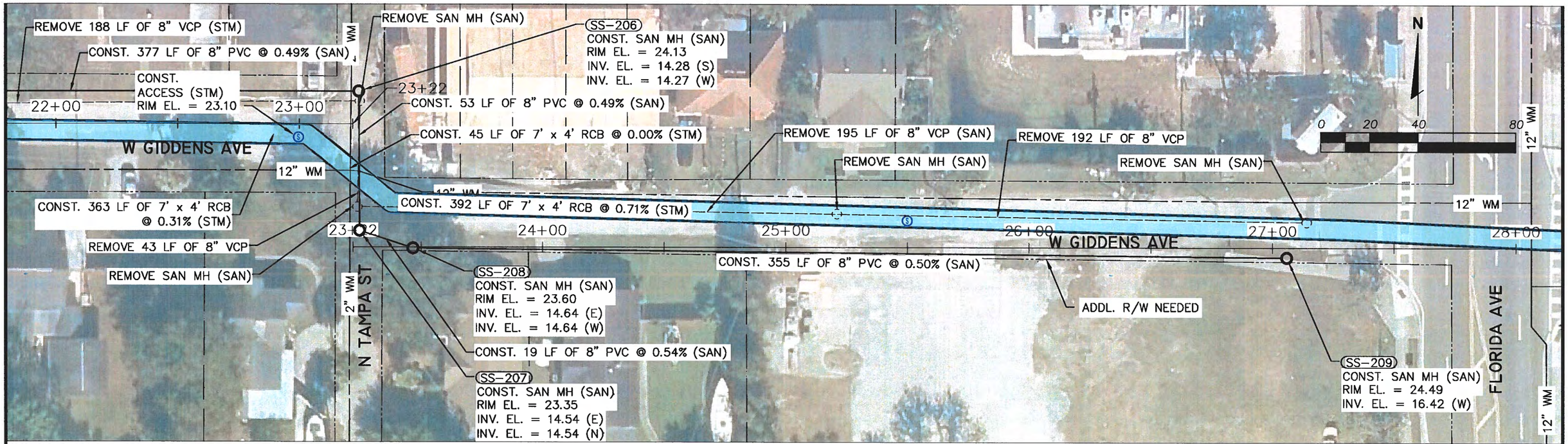

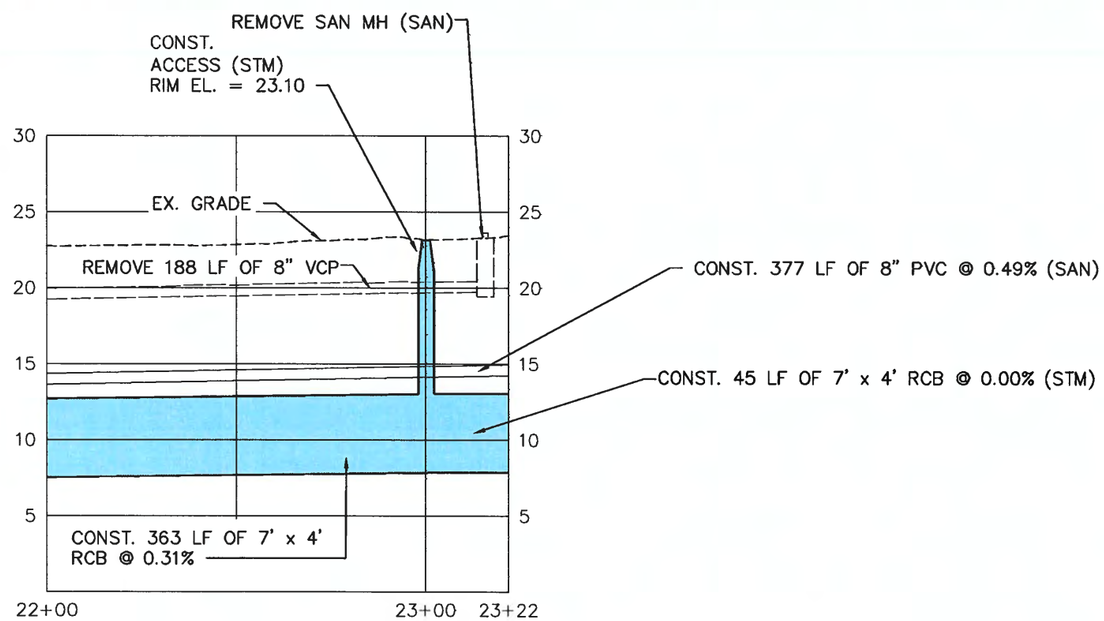

NOT FOR CONSTRUCTION
CONCEPTUAL

DES:
DRN:
CKD:
DATE: 9/05/18

CITY of TAMPA
Department of Transportation and Stormwater Services
Stormwater Engineering Division

SOUTHEAST SEMINOLE HEIGHTS
FLOOD RELIEF N949

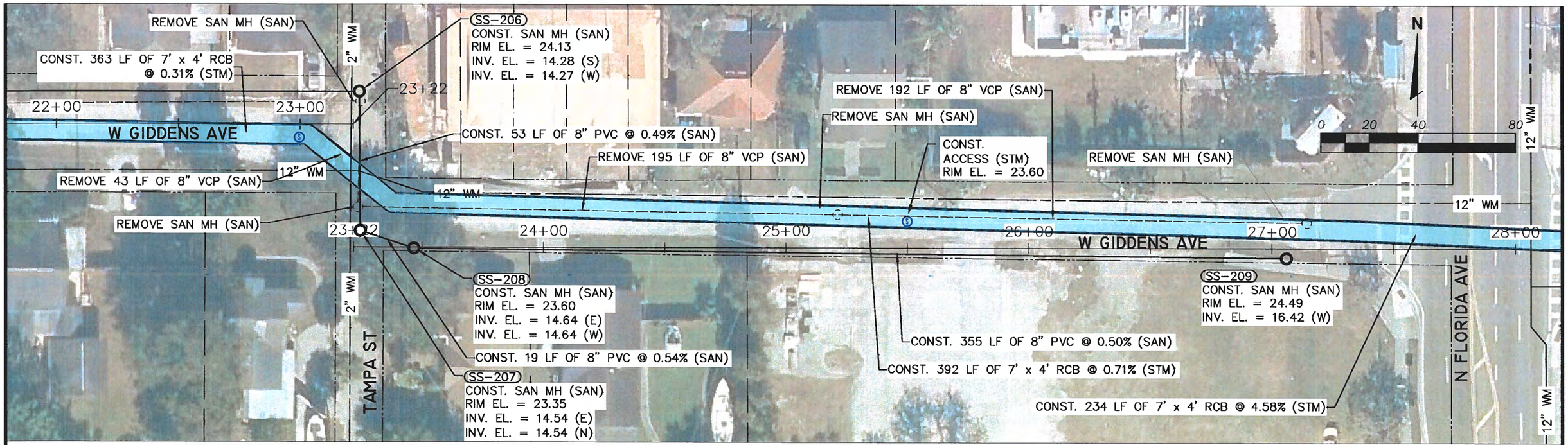

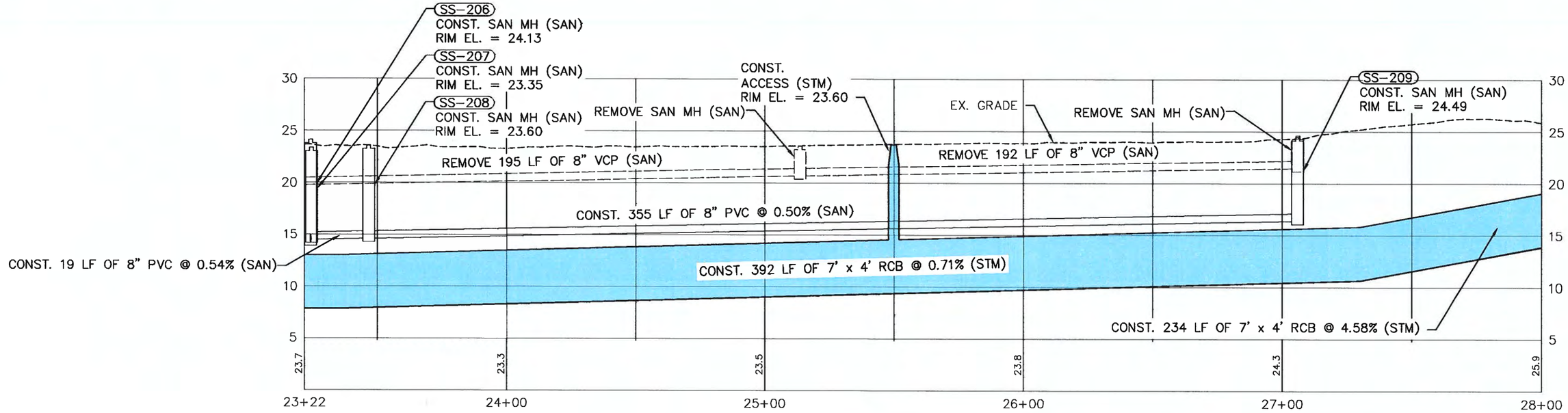

NOT FOR CONSTRUCTION
CONCEPTUAL

DES:
DRN:
CKD:
DATE: 9/05/18

CITY of TAMPA
Department of Transportation and Stormwater Services
Stormwater Engineering Division

SOUTHEAST SEMINOLE HEIGHTS
FLOOD RELIEF N949

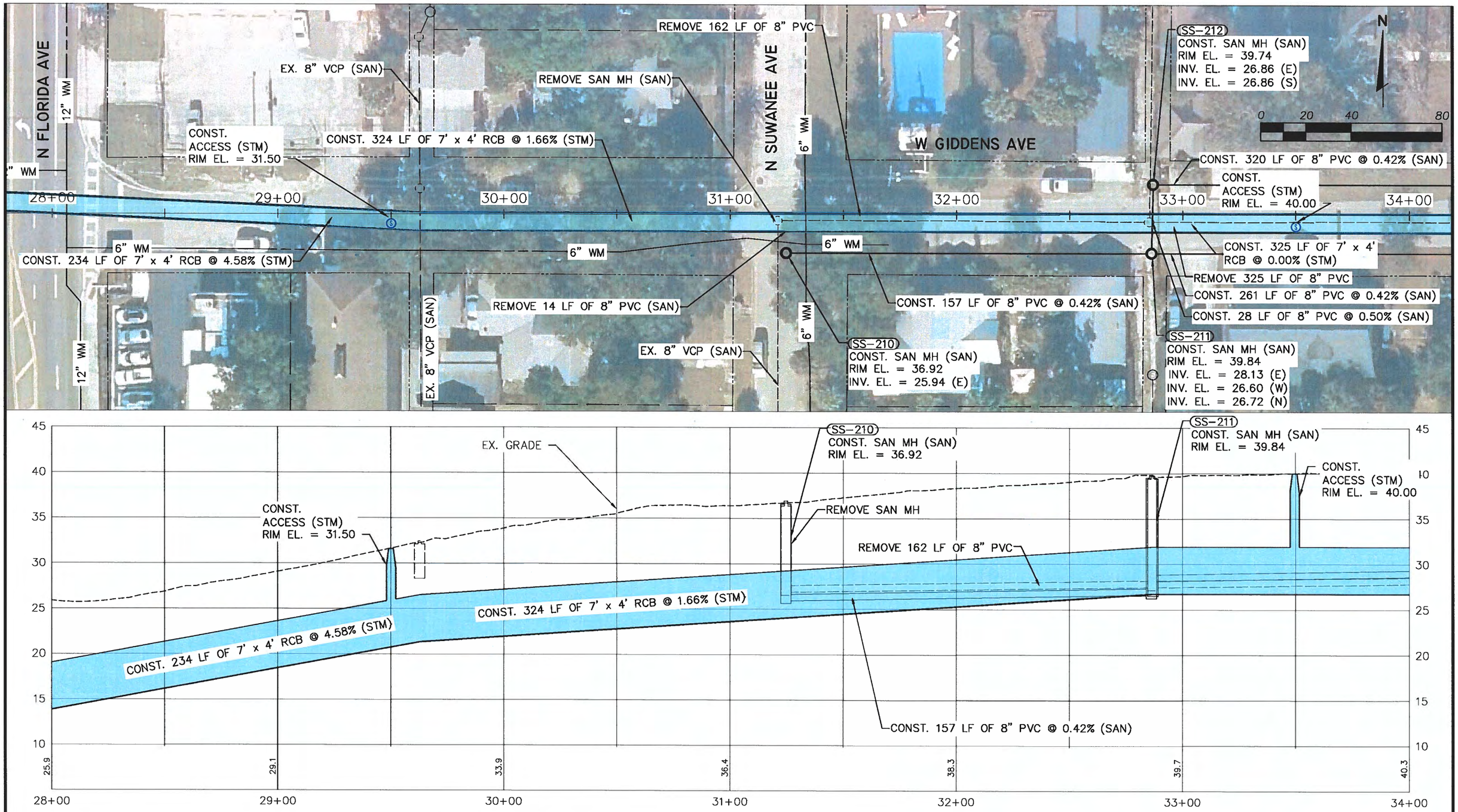

NOT FOR CONSTRUCTION
CONCEPTUAL

DES:
DRN:
CKD:
DATE: 9/05/18

CITY of TAMPA
Department of Transportation and Stormwater Services
Stormwater Engineering Division

SOUTHEAST SEMINOLE HEIGHTS
FLOOD RELIEF N949

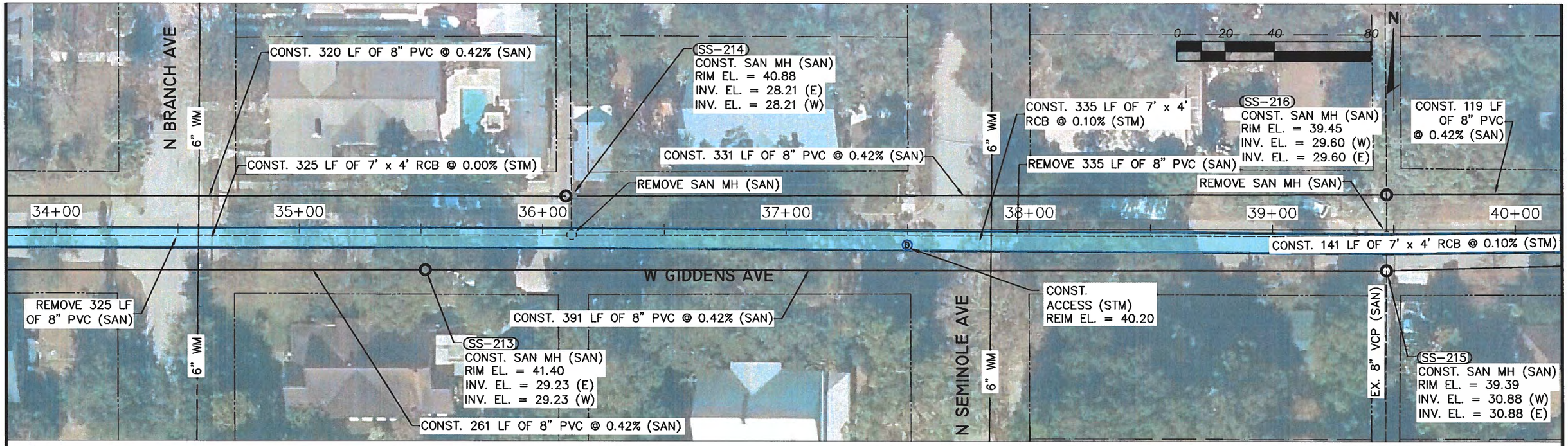

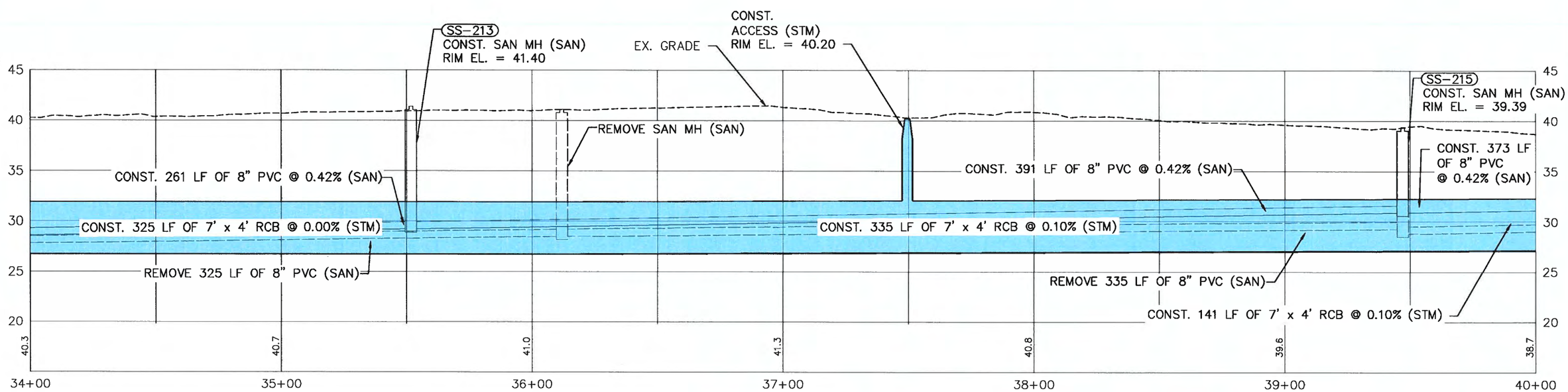

NOT FOR CONSTRUCTION
CONCEPTUAL

DES:
DRN:
CKD:
DATE: 9/05/18

CITY of TAMPA
Department of Transportation and Stormwater Services
Stormwater Engineering Division

SOUTHEAST SEMINOLE HEIGHTS
FLOOD RELIEF N949

SHEET 18 OF 49

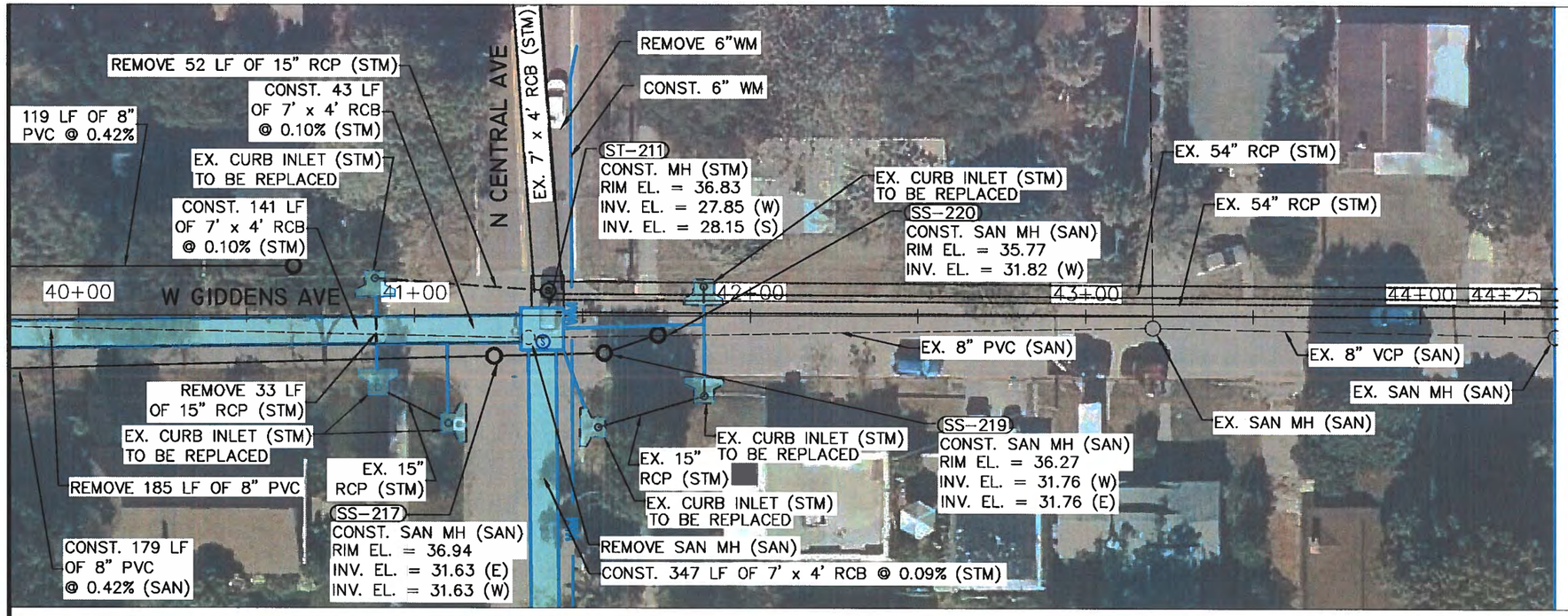

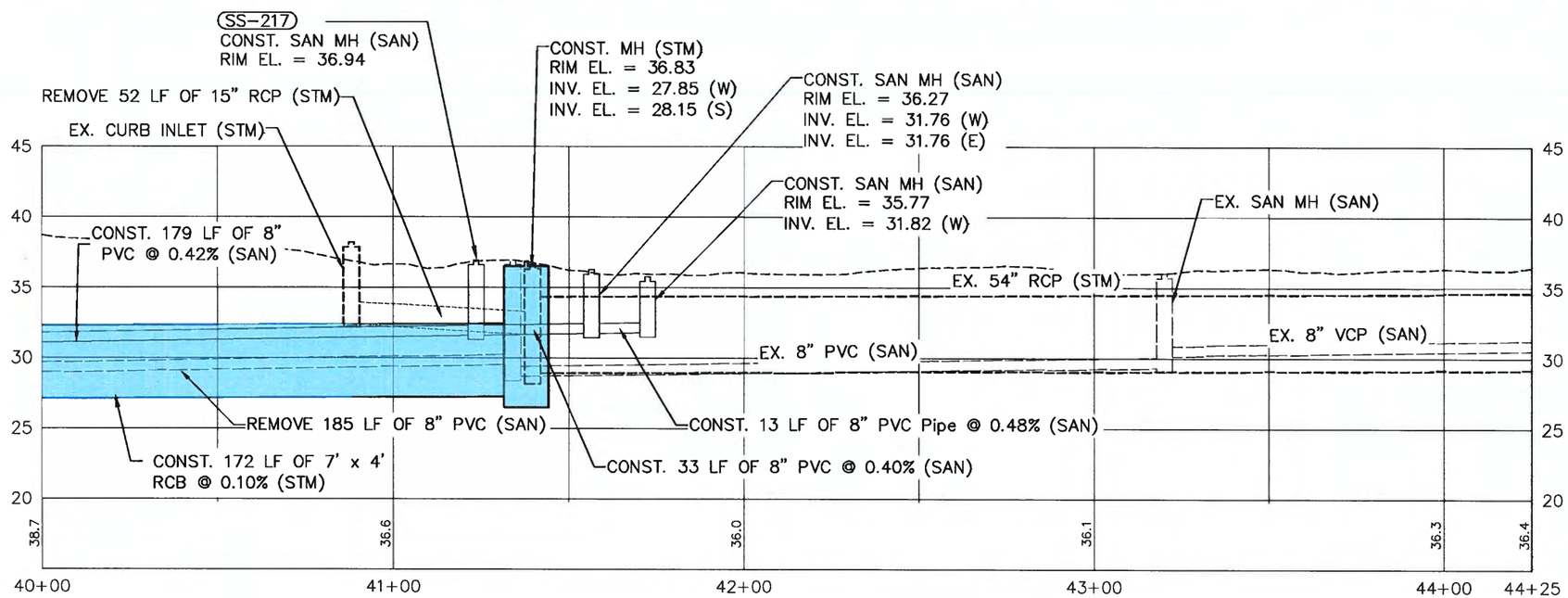

NOT FOR CONSTRUCTION
CONCEPTUAL

DES:
DRN:
CKD:
DATE: 9/05/18

CITY of TAMPA
Department of Transportation and Stormwater Services
Stormwater Engineering Division

SOUTHEAST SEMINOLE HEIGHTS
FLOOD RELIEF N949

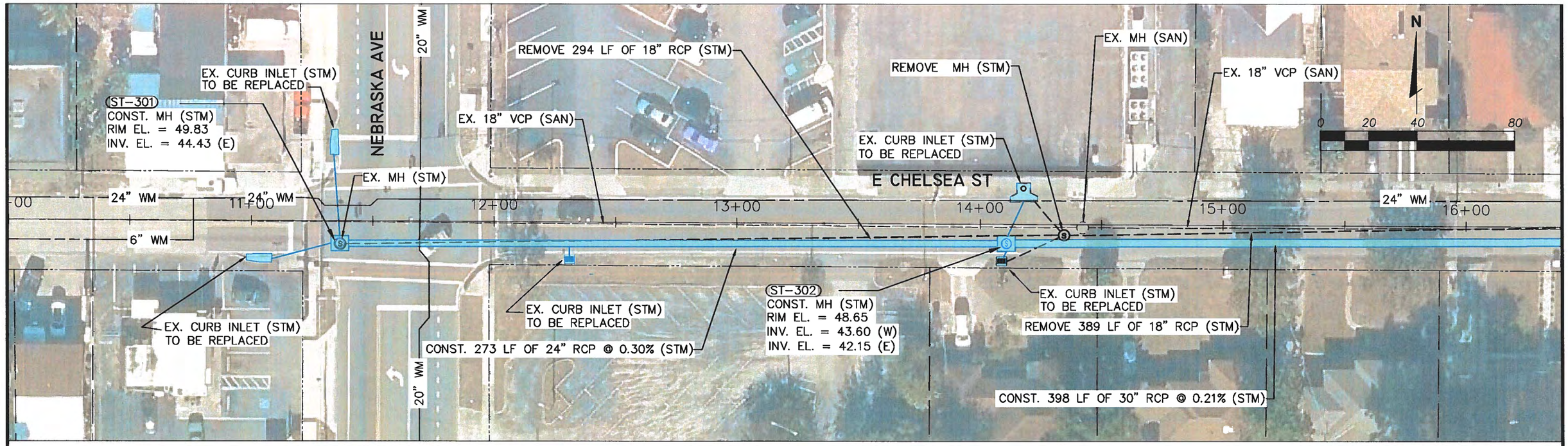

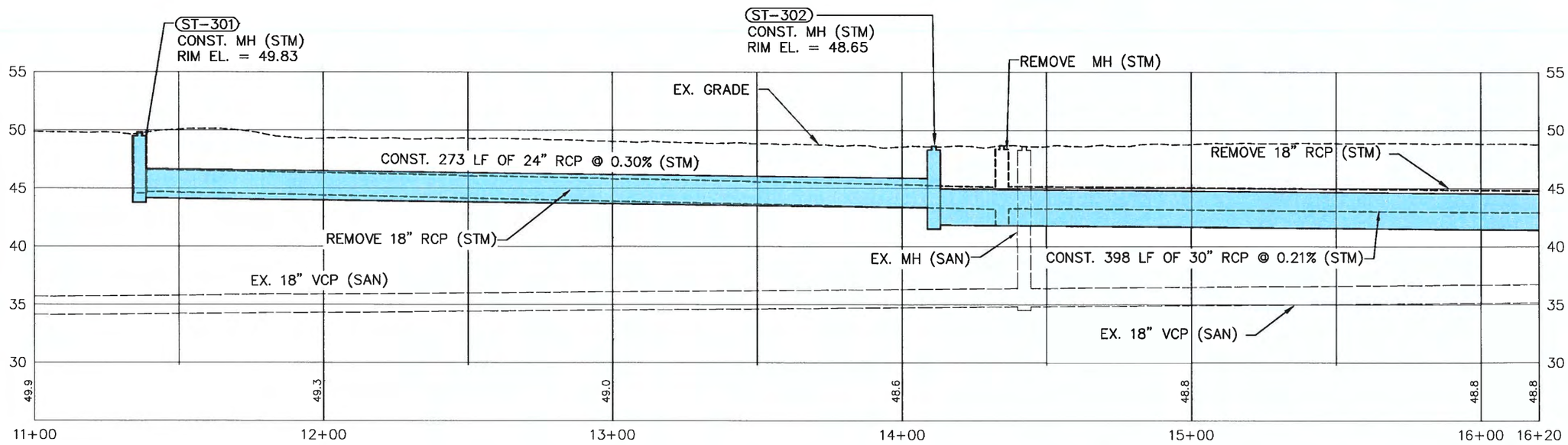

NOT FOR CONSTRUCTION
CONCEPTUAL

DES:
DRN:
CKD:
DATE: 9/05/18

CITY of TAMPA
Department of Transportation and Stormwater Services
Stormwater Engineering Division

SOUTHEAST SEMINOLE HEIGHTS
FLOOD RELIEF N949

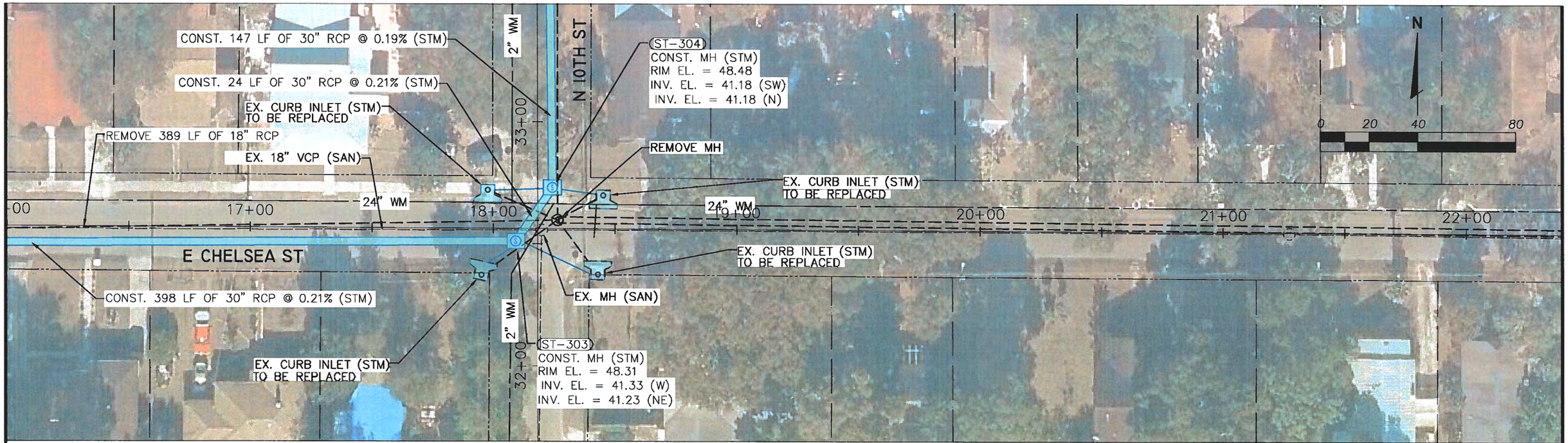

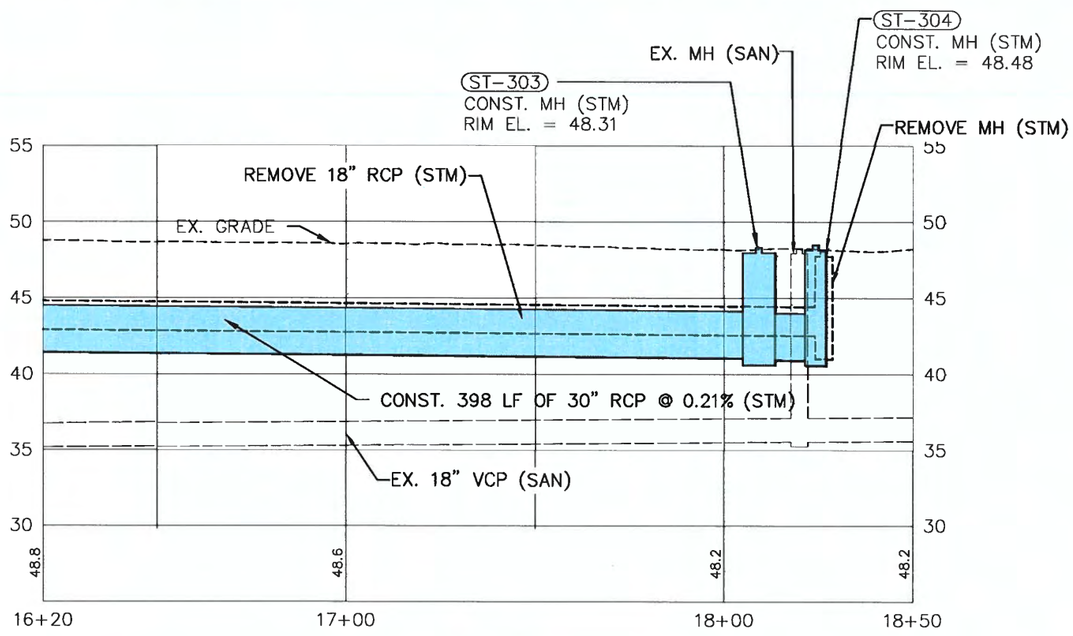

NOT FOR CONSTRUCTION
CONCEPTUAL

DES:
DRN:
CKD:
DATE: 9/05/18

CITY of TAMPA
Department of Transportation and Stormwater Services
Stormwater Engineering Division

SOUTHEAST SEMINOLE HEIGHTS
FLOOD RELIEF N949

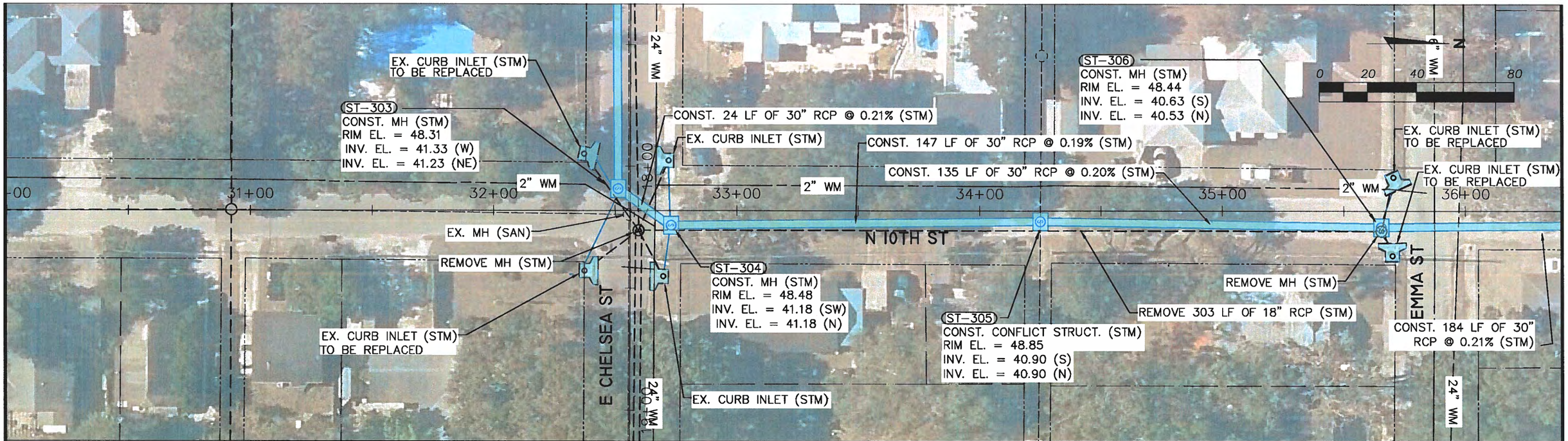

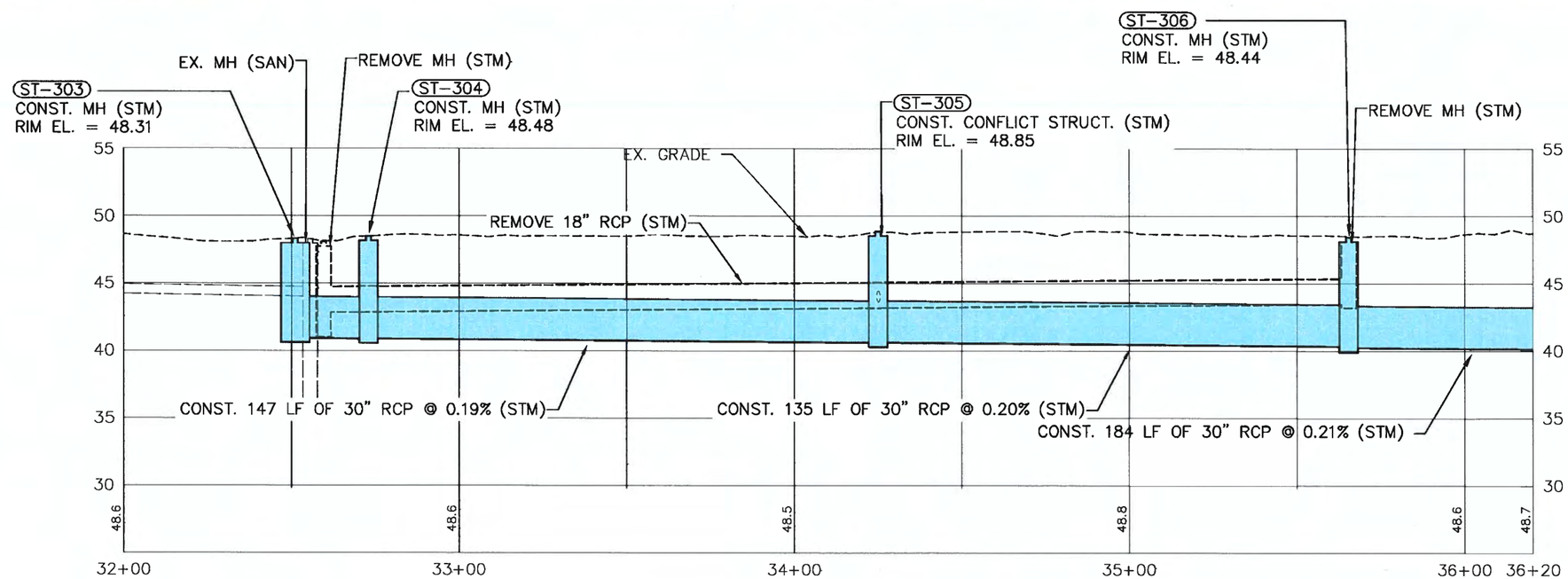

NOT FOR CONSTRUCTION
CONCEPTUAL

DES:
DRN:
CKD:
DATE: 9/05/18

CITY of TAMPA
Department of Transportation and Stormwater Services
Stormwater Engineering Division

SOUTHEAST SEMINOLE HEIGHTS
FLOOD RELIEF N949

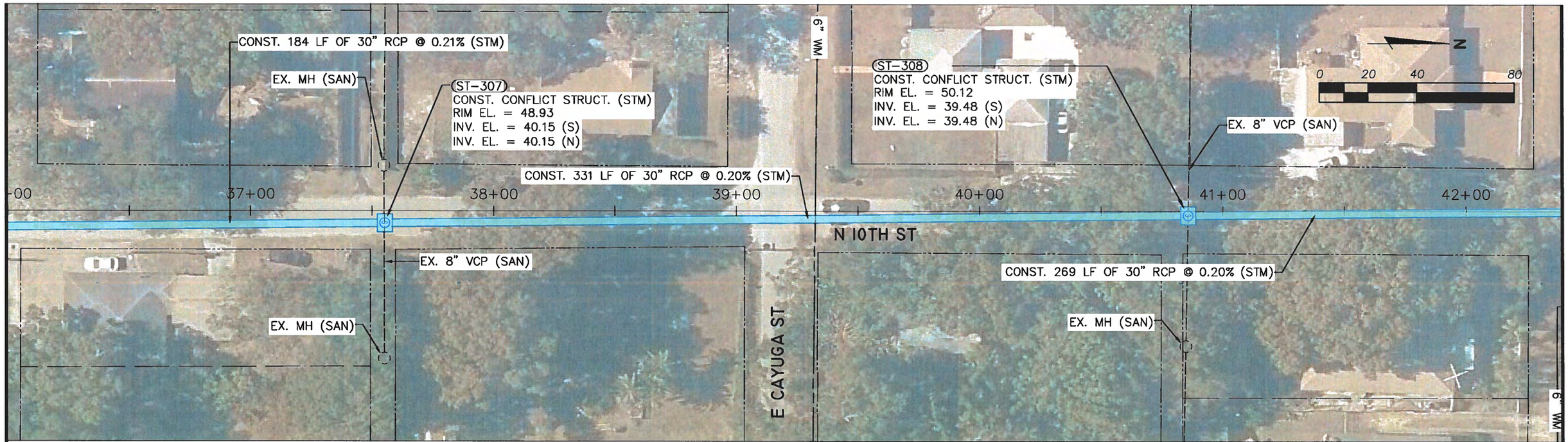

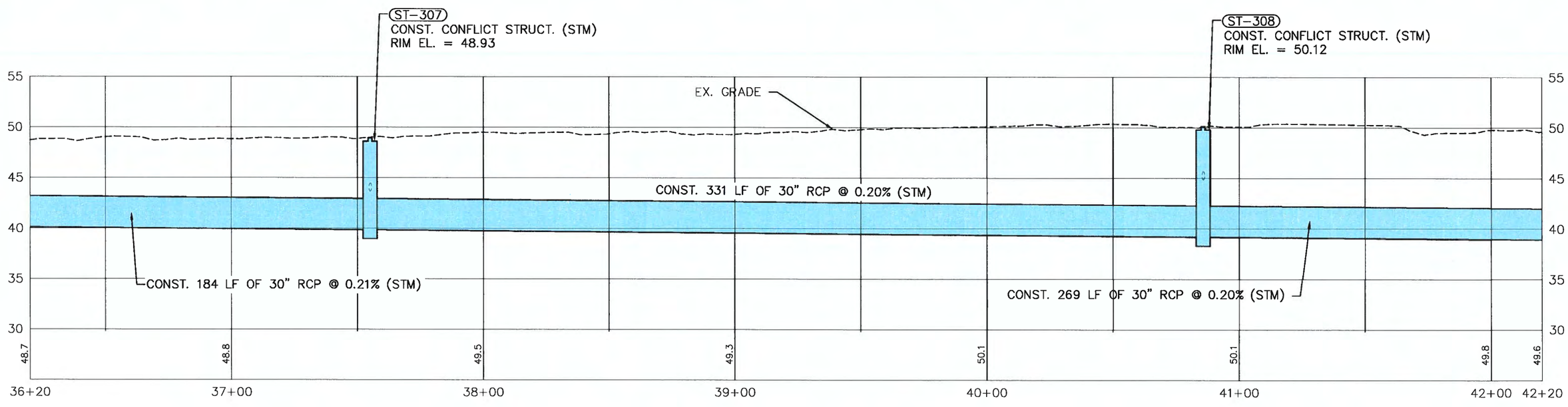

NOT FOR CONSTRUCTION
CONCEPTUAL

DES:
DRN:
CKD:
DATE: 9/05/18

CITY of TAMPA
Department of Transportation and Stormwater Services
Stormwater Engineering Division

SOUTHEAST SEMINOLE HEIGHTS
FLOOD RELIEF N949

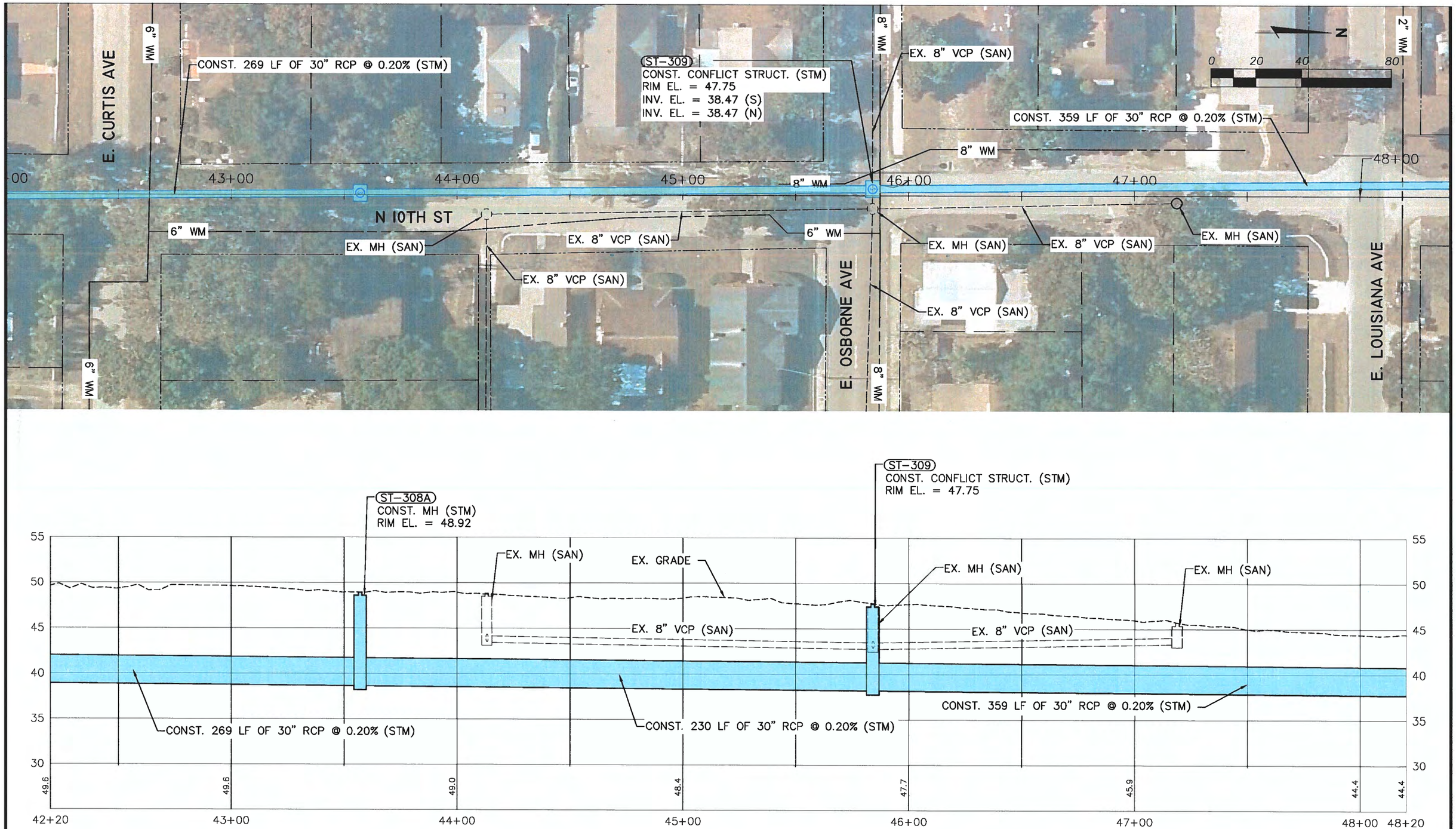

NOT FOR CONSTRUCTION
CONCEPTUAL

DES:
DRN:
CKD:
DATE: 9/05/18

CITY of TAMPA
Department of Transportation and Stormwater Services
Stormwater Engineering Division

SOUTHEAST SEMINOLE HEIGHTS
FLOOD RELIEF N949

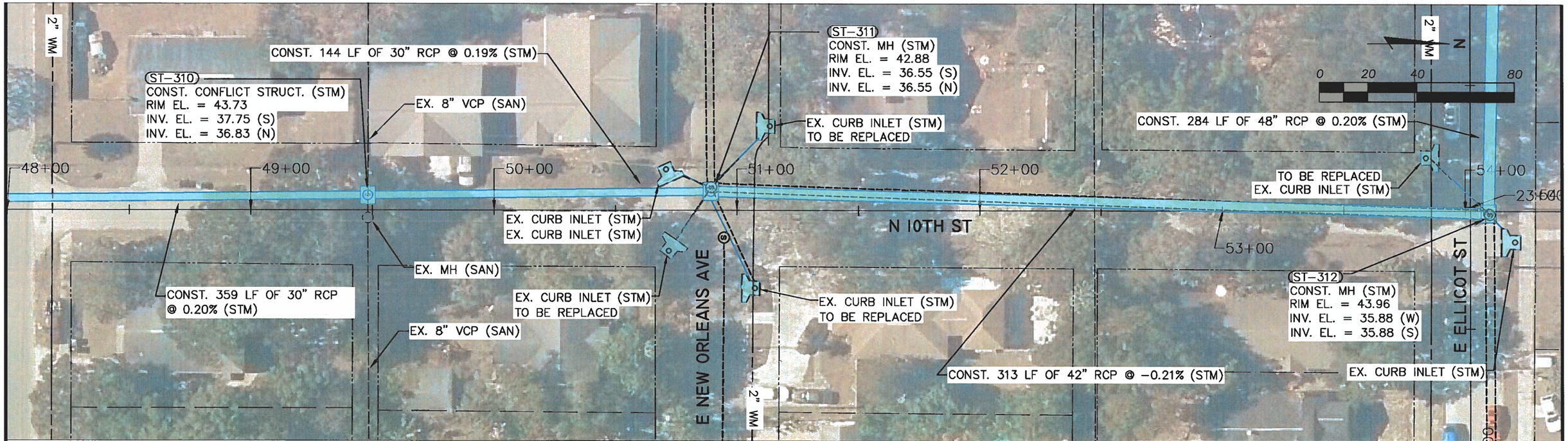

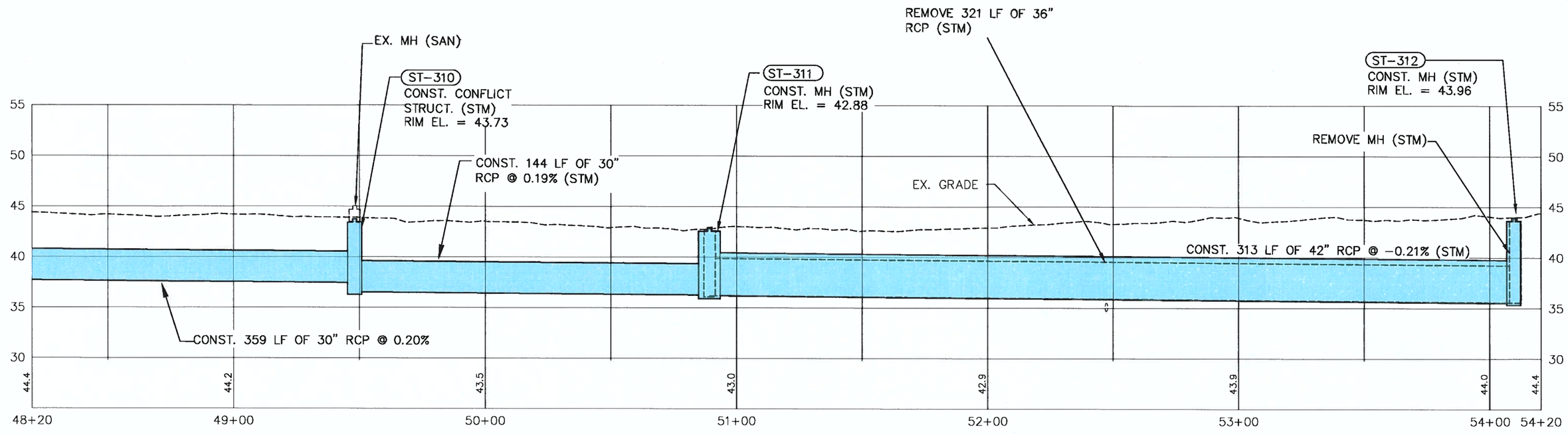

NOT FOR CONSTRUCTION
CONCEPTUAL

DES:
DRN:
CKD:
DATE: 9/05/18

CITY of TAMPA
Department of Transportation and Stormwater Services
Stormwater Engineering Division

SOUTHEAST SEMINOLE HEIGHTS
FLOOD RELIEF N949

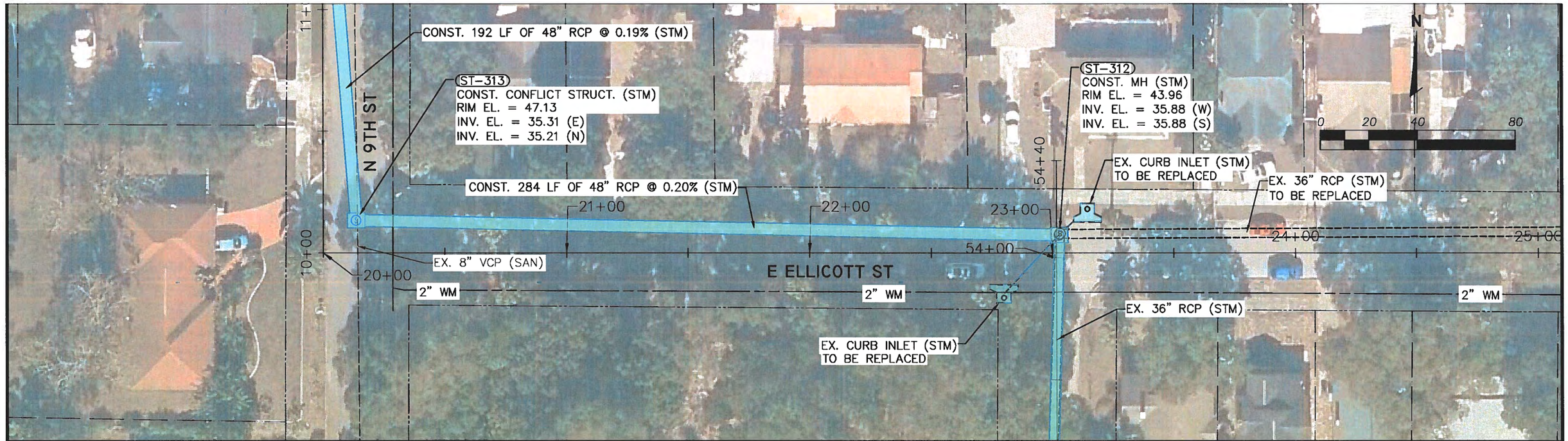

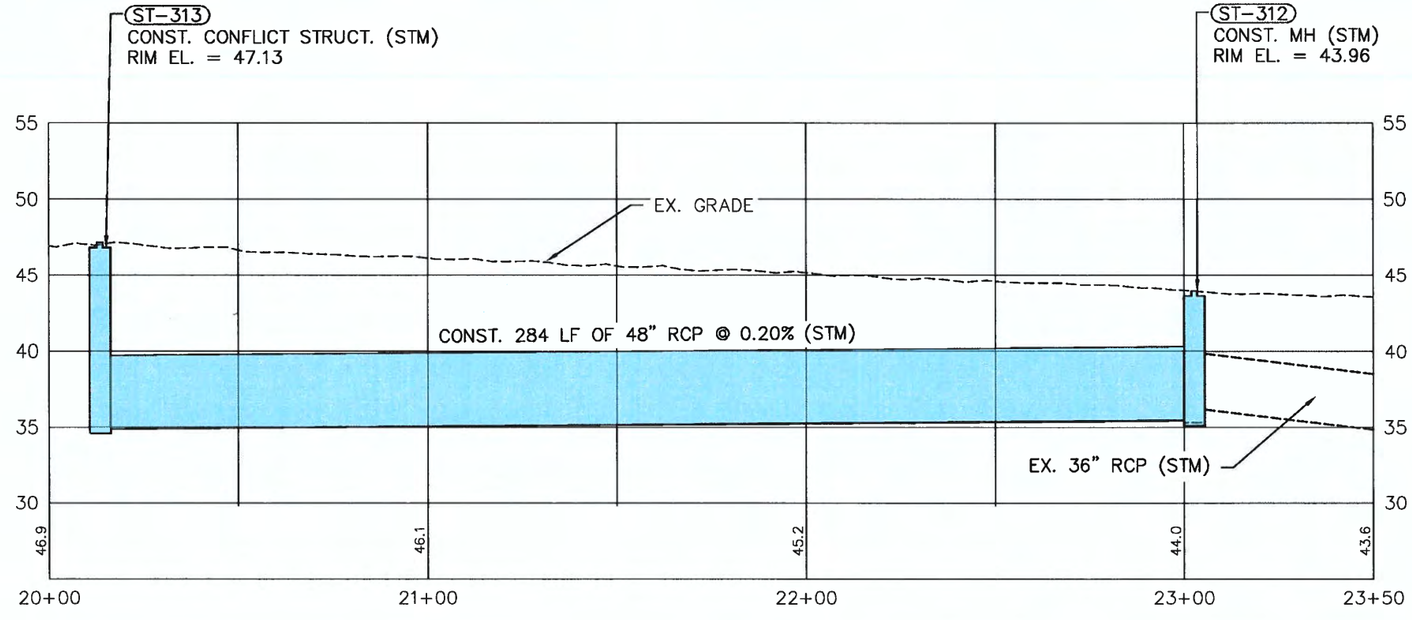

NOT FOR CONSTRUCTION
CONCEPTUAL

DES:
DRN:
CKD:
DATE: 9/05/18

CITY of TAMPA
Department of Transportation and Stormwater Services
Stormwater Engineering Division

SOUTHEAST SEMINOLE HEIGHTS
FLOOD RELIEF N949

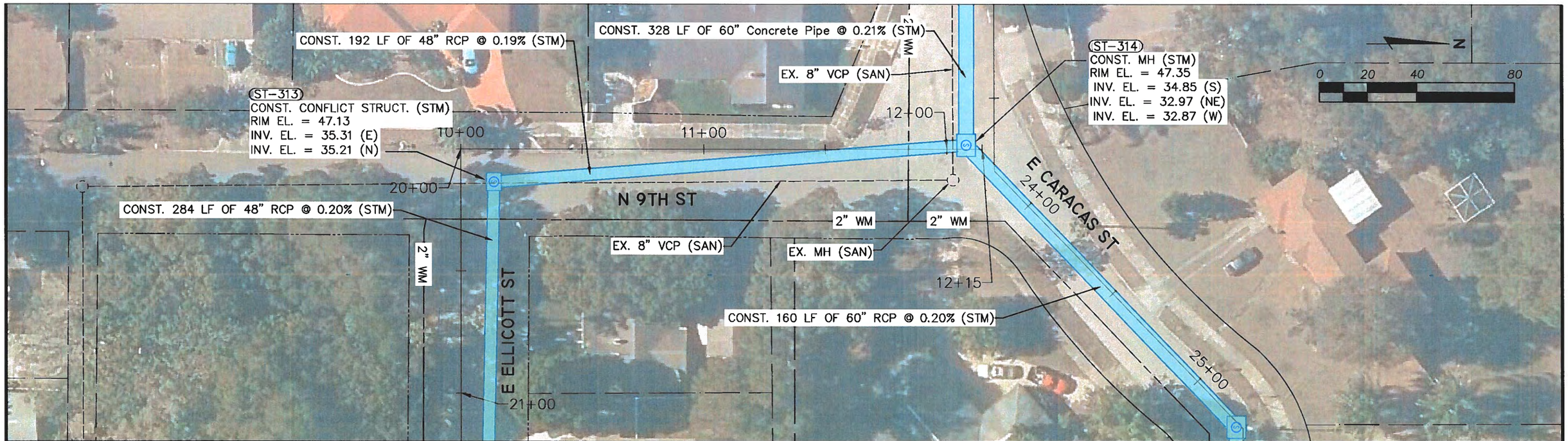

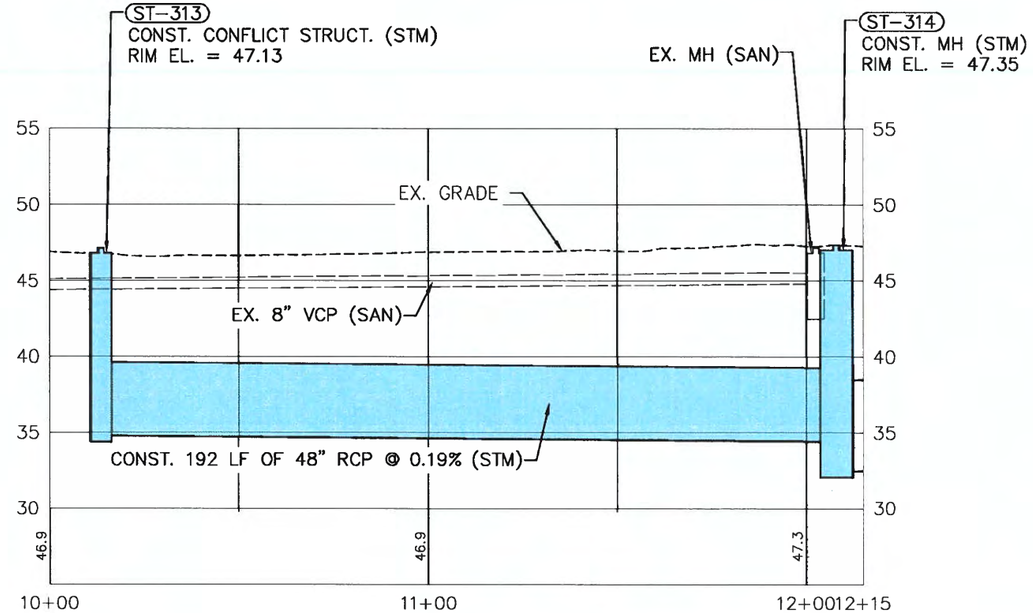

NOT FOR CONSTRUCTION
CONCEPTUAL

DES:
DRN:
CKD:
DATE: 9/05/18

CITY of TAMPA
Department of Transportation and Stormwater Services
Stormwater Engineering Division

SOUTHEAST SEMINOLE HEIGHTS
FLOOD RELIEF N949

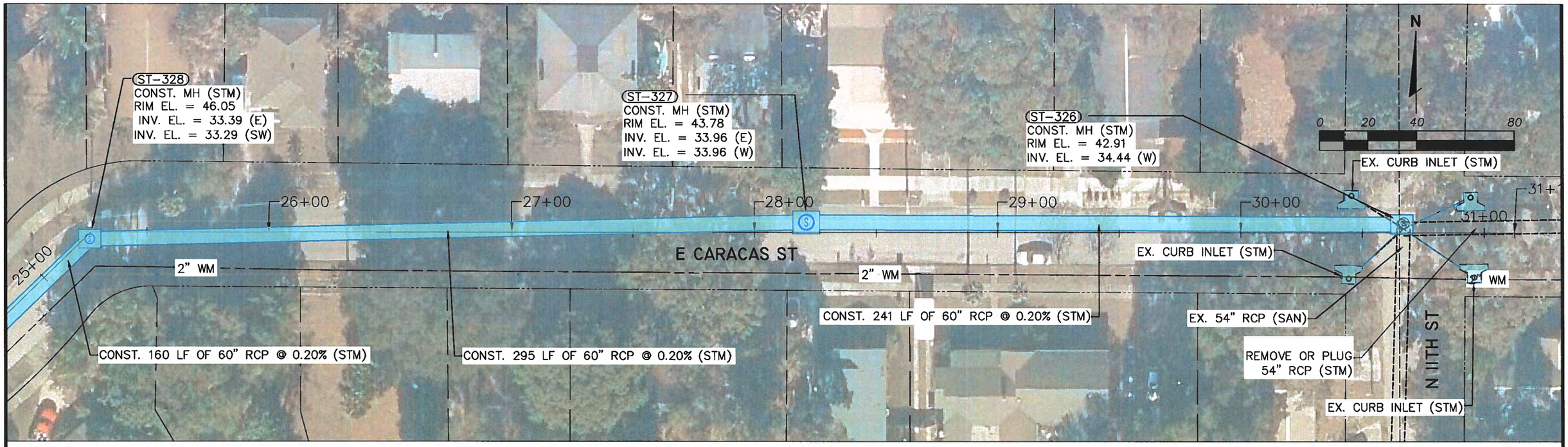

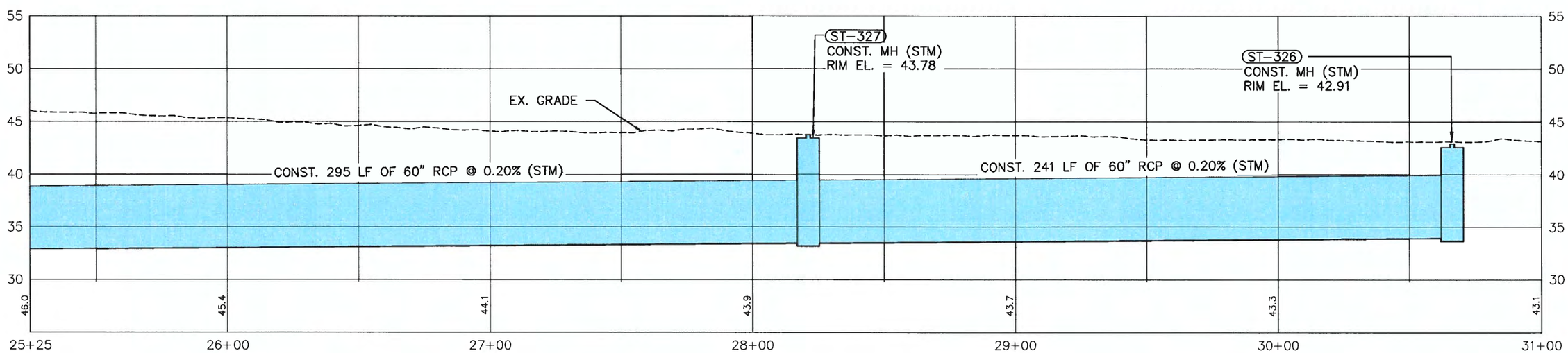

NOT FOR CONSTRUCTION
CONCEPTUAL

DES:
DRN:
CKD:
DATE: 9/05/18

CITY of TAMPA
Department of Transportation and Stormwater Services
Stormwater Engineering Division

SOUTHEAST SEMINOLE HEIGHTS
FLOOD RELIEF N949

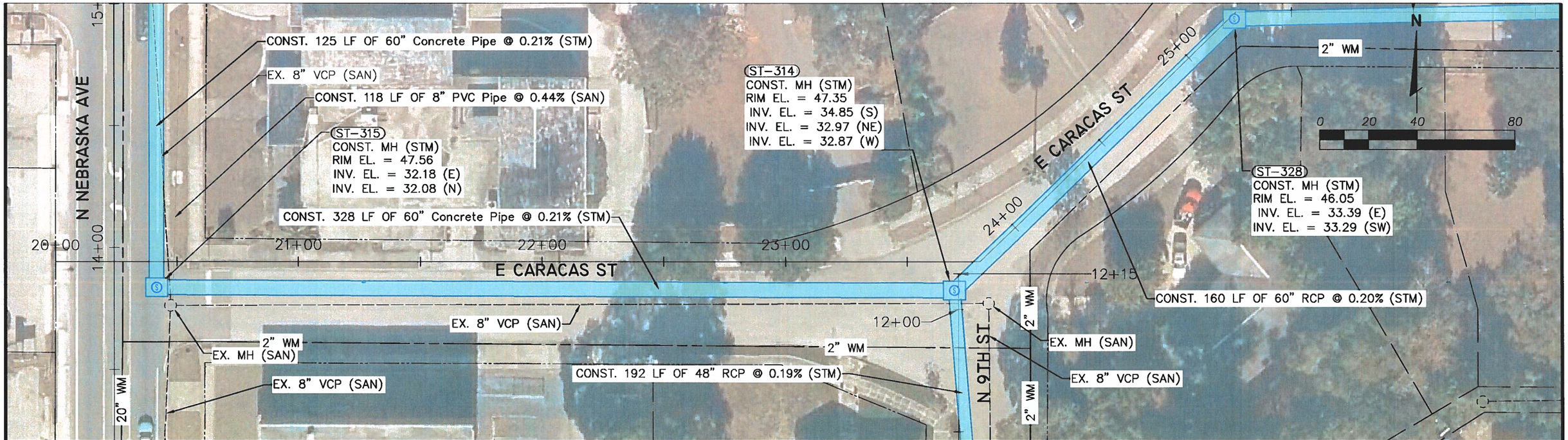

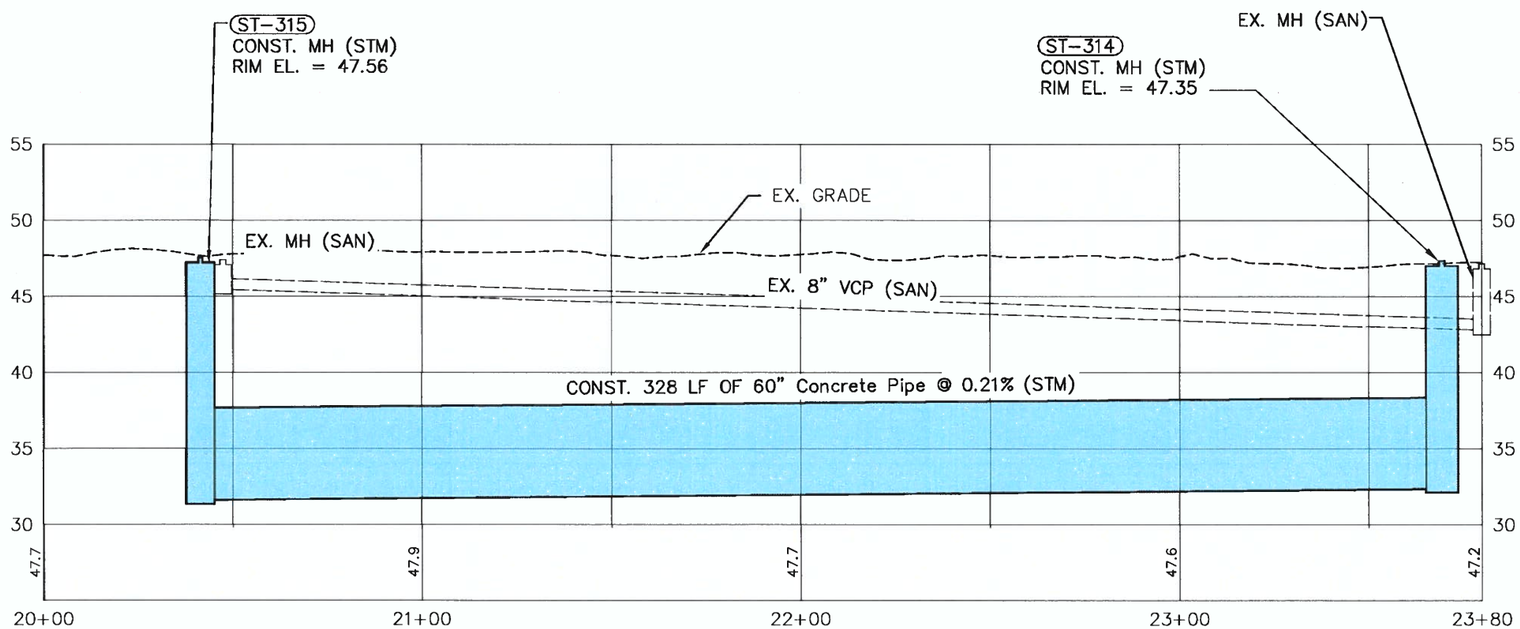

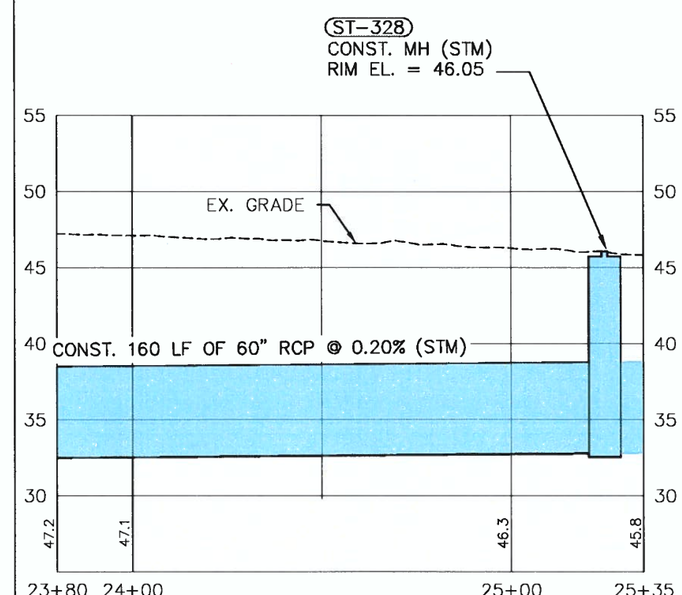

NOT FOR CONSTRUCTION
CONCEPTUAL

DES:
DRN:
CKD:
DATE: 9/05/18

CITY of TAMPA
Department of Transportation and Stormwater Services
Stormwater Engineering Division

SOUTHEAST SEMINOLE HEIGHTS
FLOOD RELIEF N949

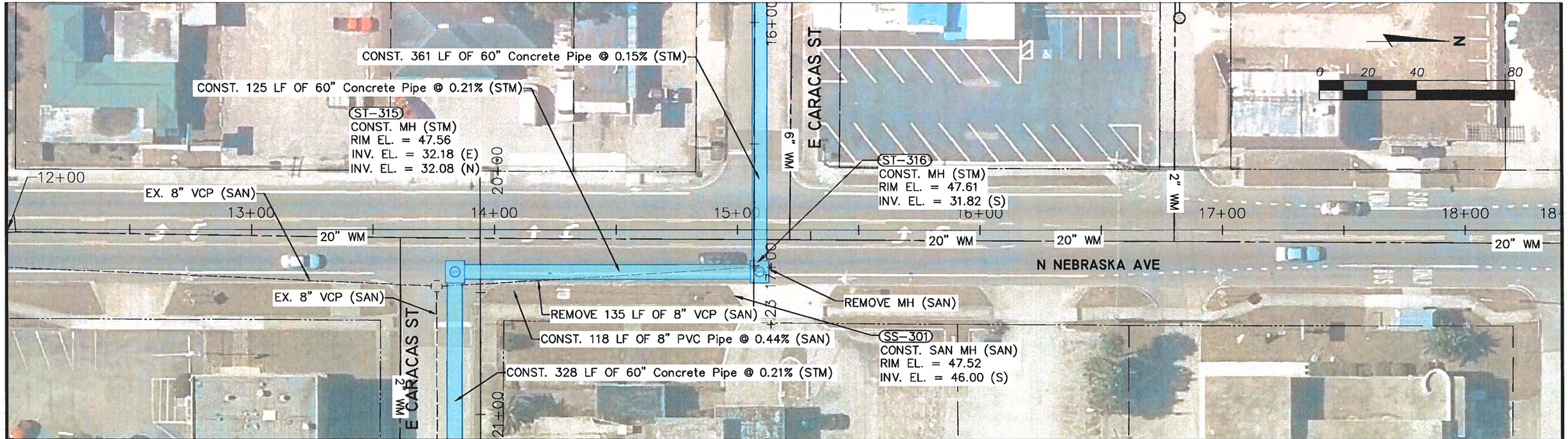

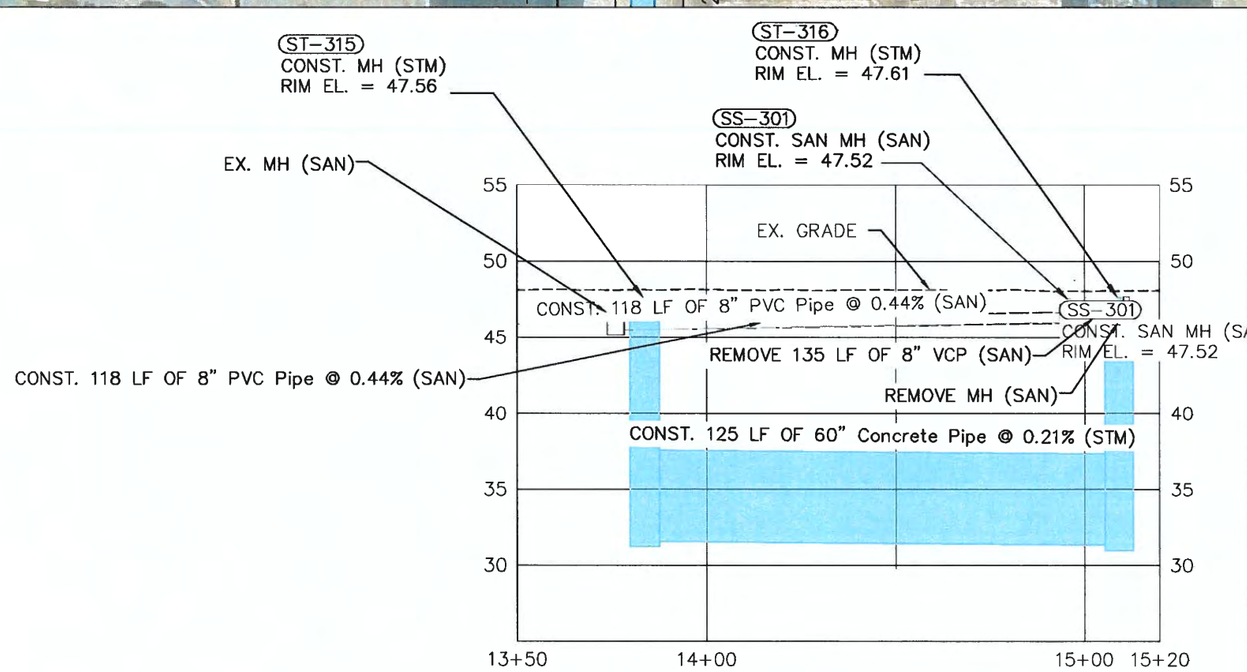

N. NEBRASKA

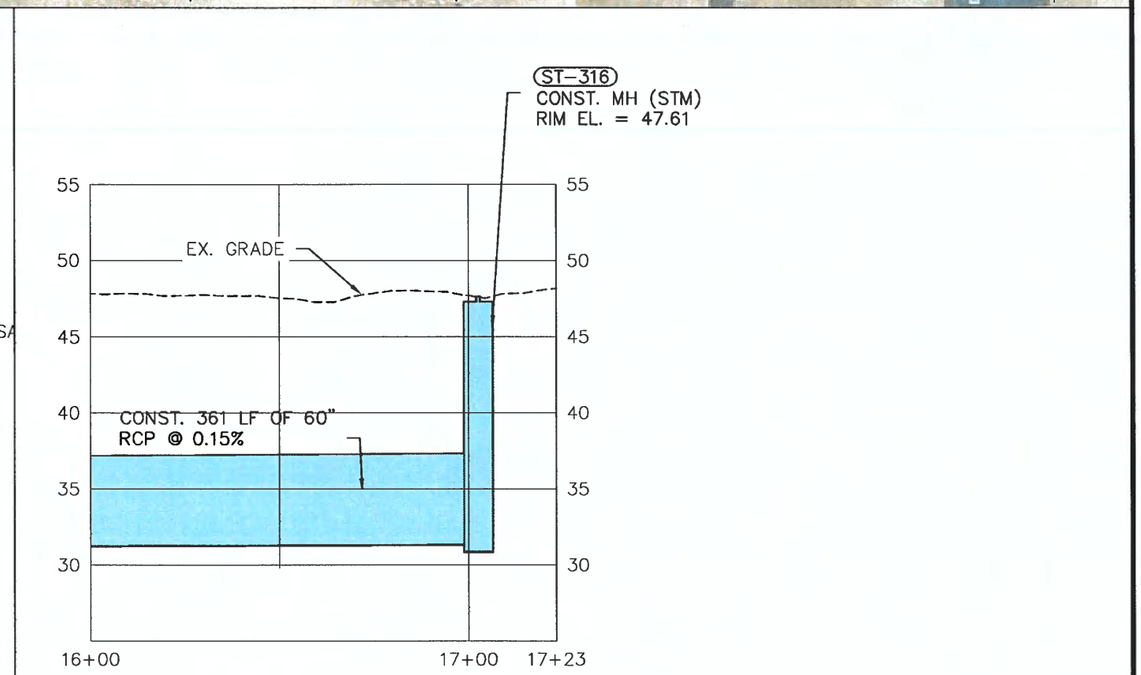

E. CARACAS ST

NOT FOR CONSTRUCTION
CONCEPTUAL

DES:
DRN:
CKD:
DATE: 9/05/18

CITY of TAMPA
Department of Transportation and Stormwater Services
Stormwater Engineering Division

SOUTHEAST SEMINOLE HEIGHTS
FLOOD RELIEF N949

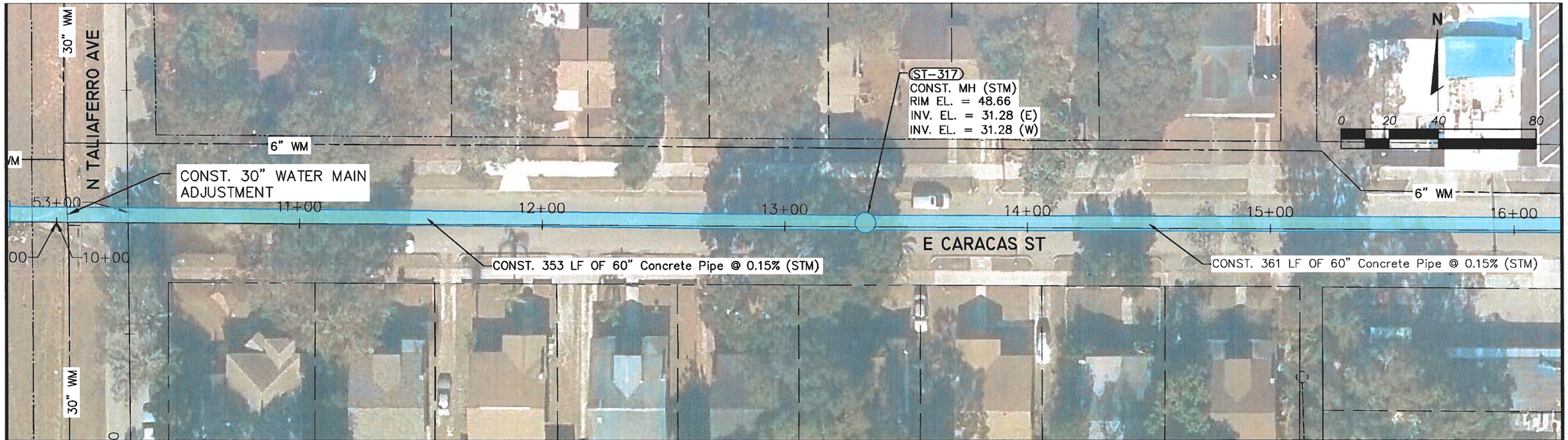

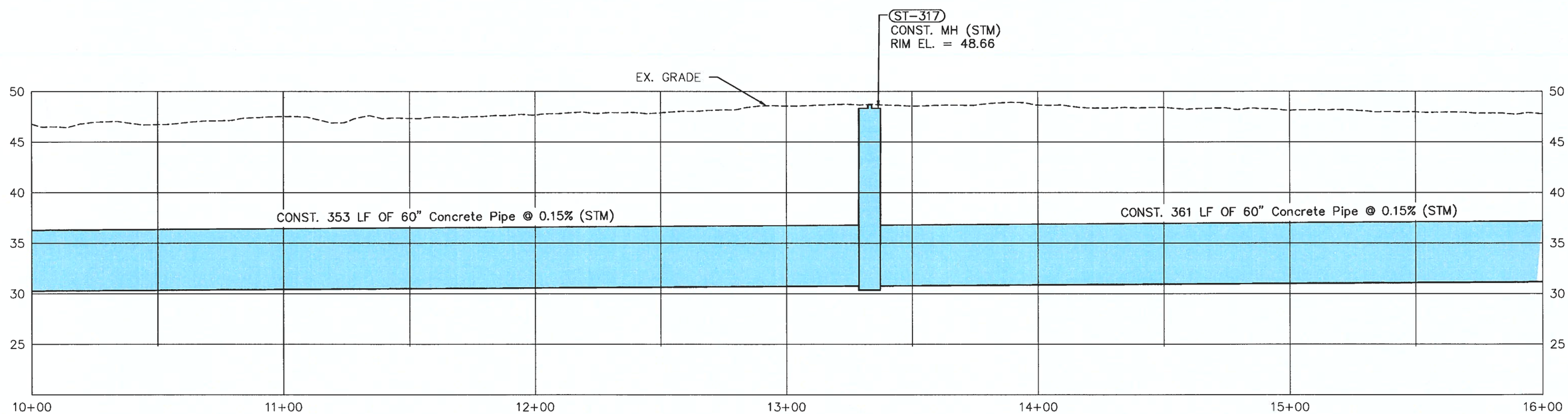

NOT FOR CONSTRUCTION
CONCEPTUAL

DES:
DRN:
CKD:
DATE: 9/05/18

CITY of TAMPA
Department of Transportation and Stormwater Services
Stormwater Engineering Division

SOUTHEAST SEMINOLE HEIGHTS
FLOOD RELIEF N949

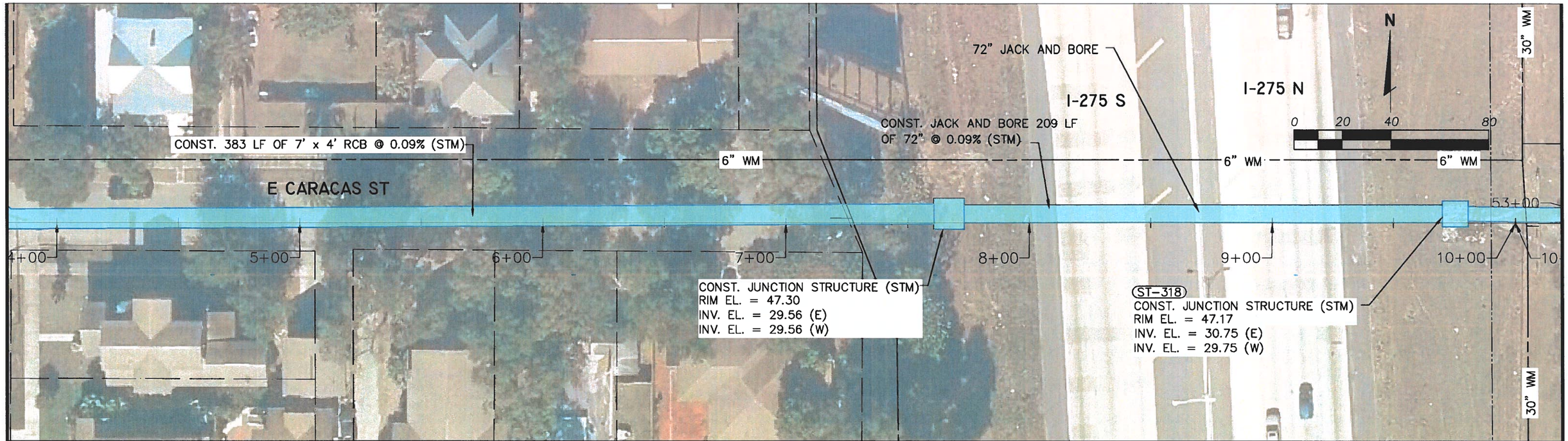

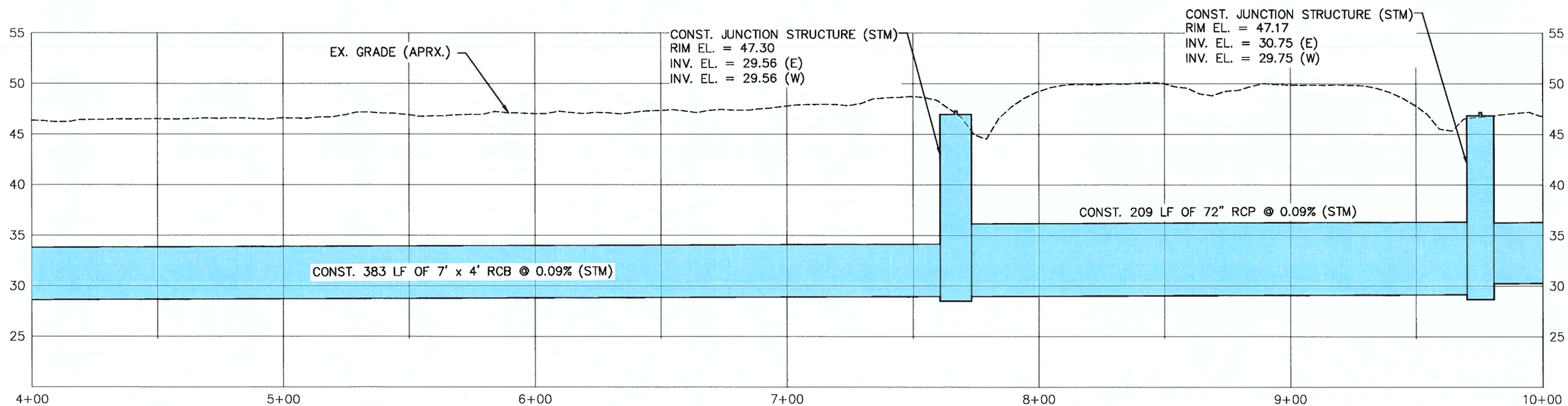

NOT FOR CONSTRUCTION
CONCEPTUAL

DES:
DRN:
CKD:
DATE: 9/05/18

CITY of TAMPA
Department of Transportation and Stormwater Services
Stormwater Engineering Division

SOUTHEAST SEMINOLE HEIGHTS
FLOOD RELIEF N949

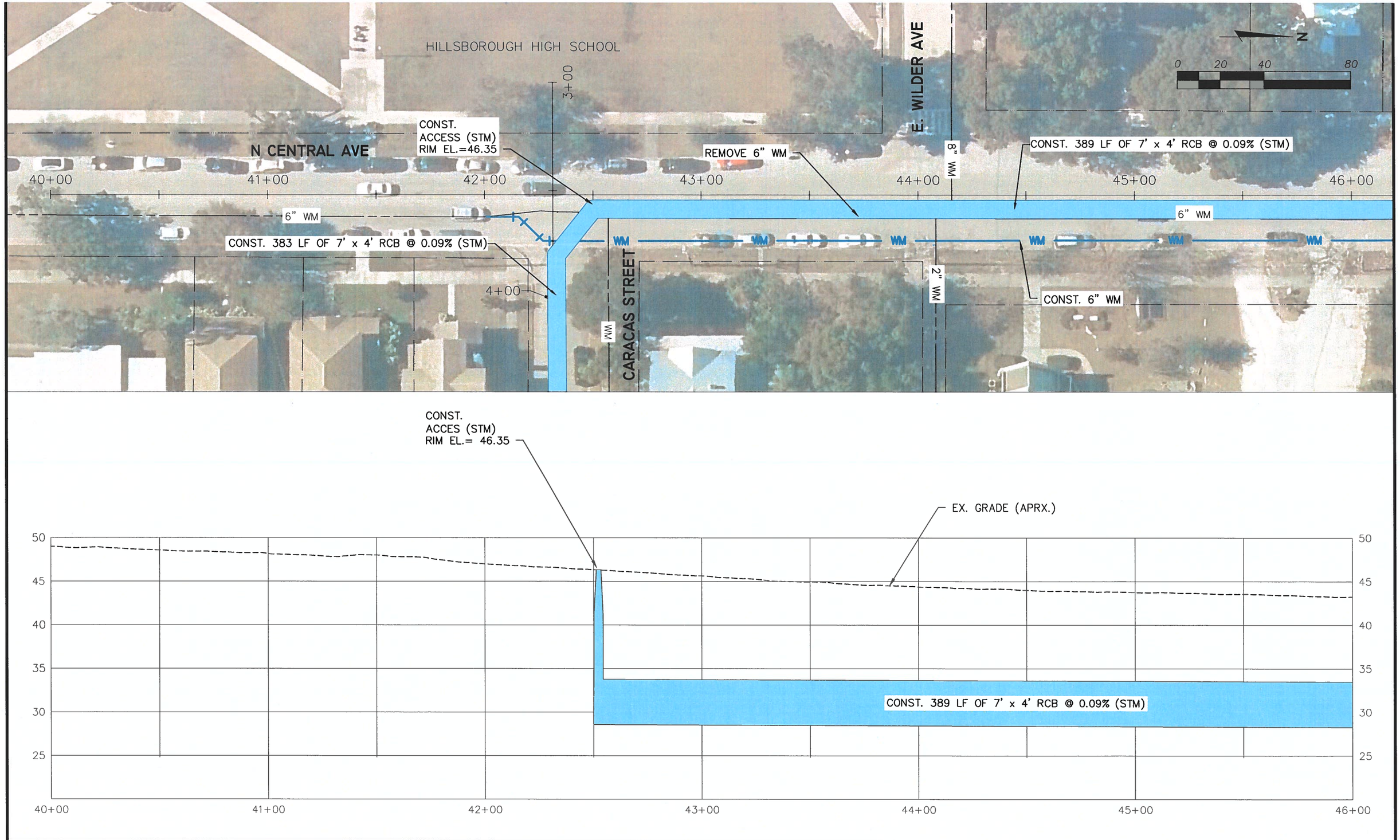

NOT FOR CONSTRUCTION
CONCEPTUAL

DES:
DRN:
CKD:
DATE: 9/05/18

CITY of TAMPA
Department of Transportation and Stormwater Services
Stormwater Engineering Division

SOUTHEAST SEMINOLE HEIGHTS
FLOOD RELIEF N949

SHEET 33 OF 49

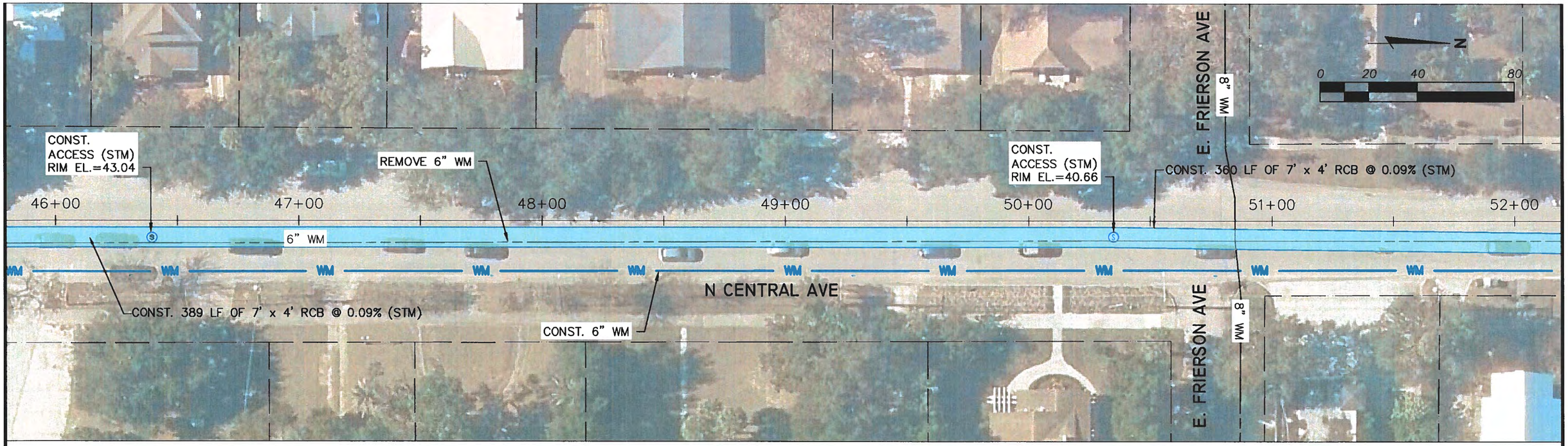

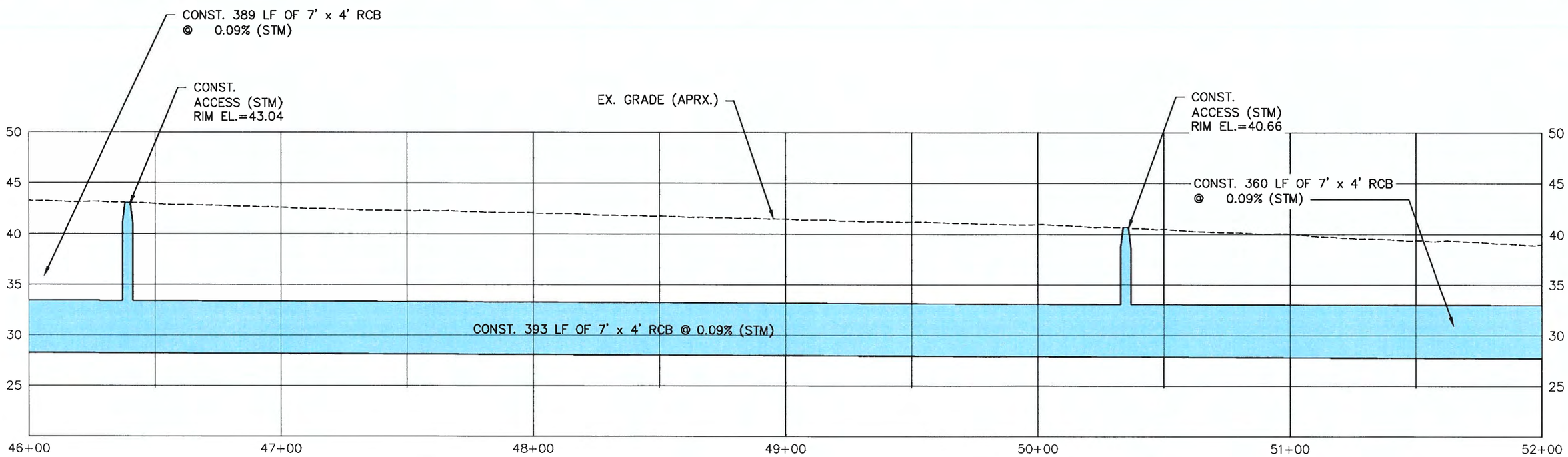

NOT FOR CONSTRUCTION
CONCEPTUAL

DES:
DRN:
CKD:
DATE: 9/05/18

CITY of TAMPA
Department of Transportation and Stormwater Services
Stormwater Engineering Division

SOUTHEAST SEMINOLE HEIGHTS
FLOOD RELIEF N949

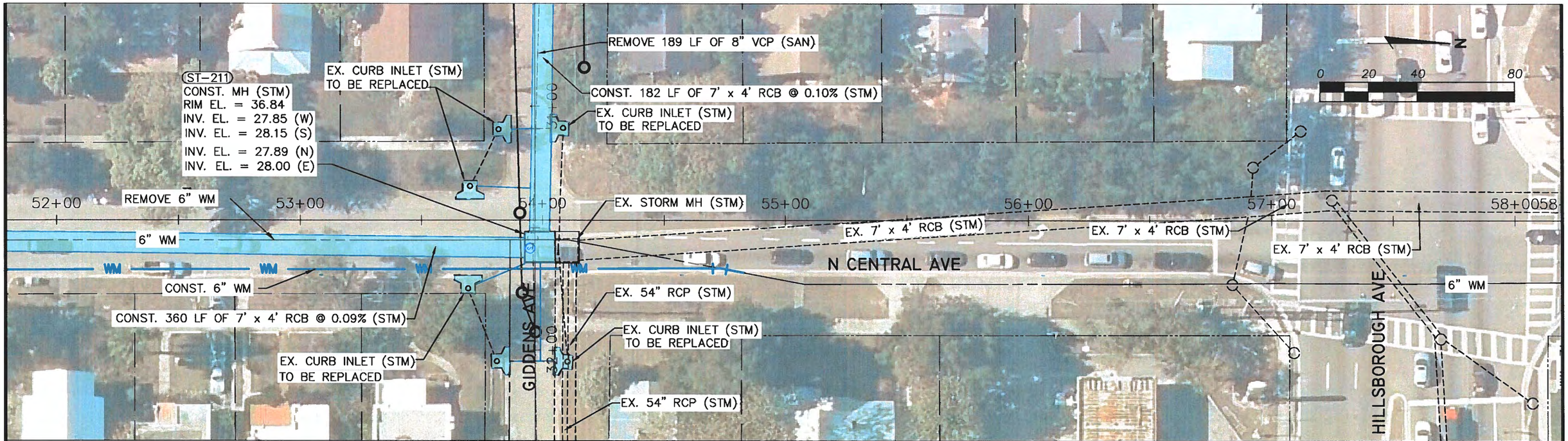

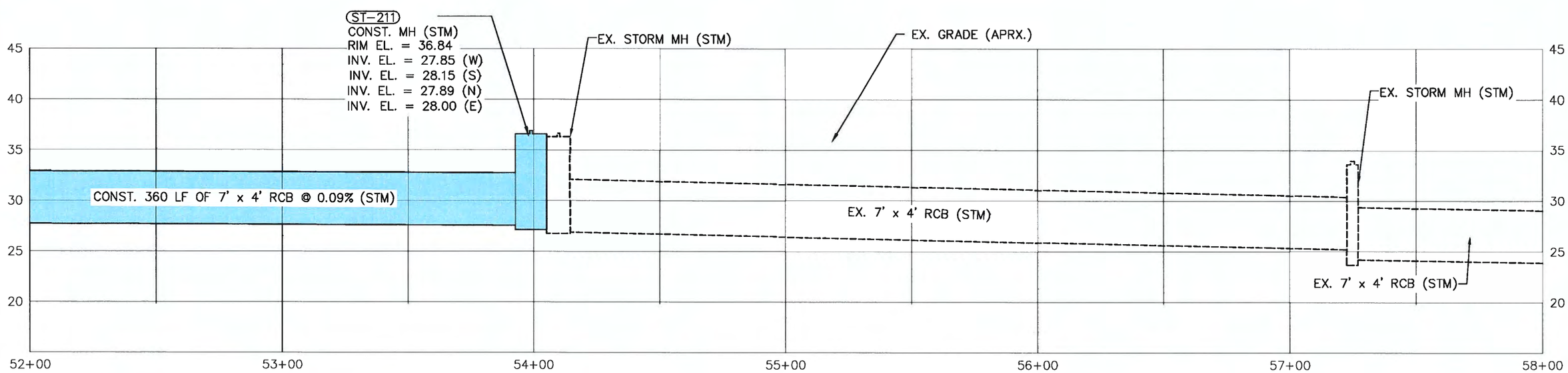

NOT FOR CONSTRUCTION
CONCEPTUAL

DES:
DRN:
CKD:
DATE: 9/05/18

CITY of TAMPA
Department of Transportation and Stormwater Services
Stormwater Engineering Division

SOUTHEAST SEMINOLE HEIGHTS
FLOOD RELIEF N949

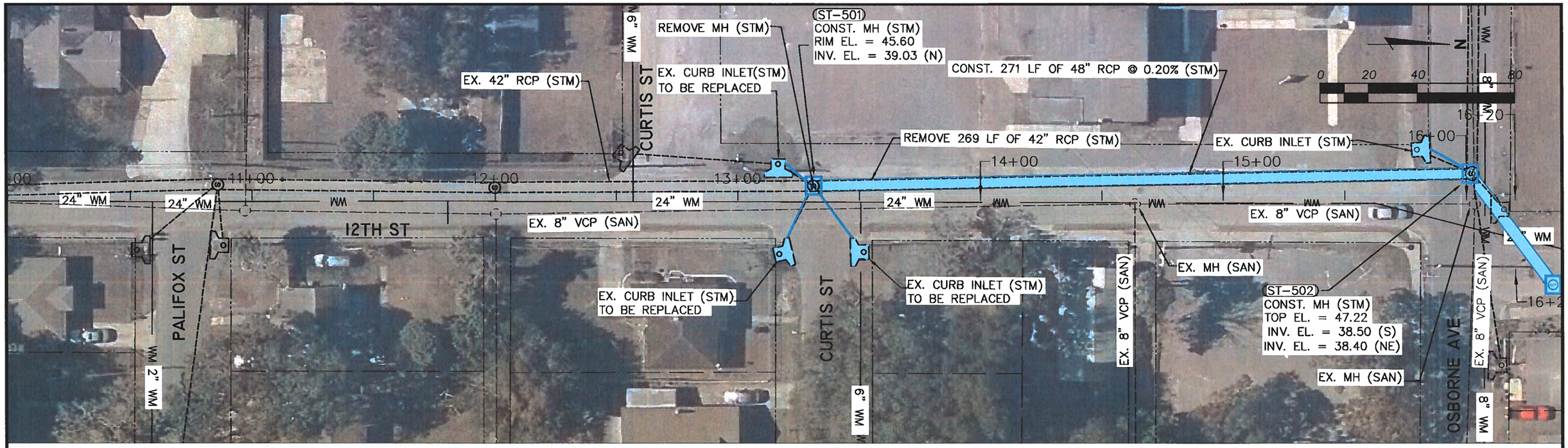

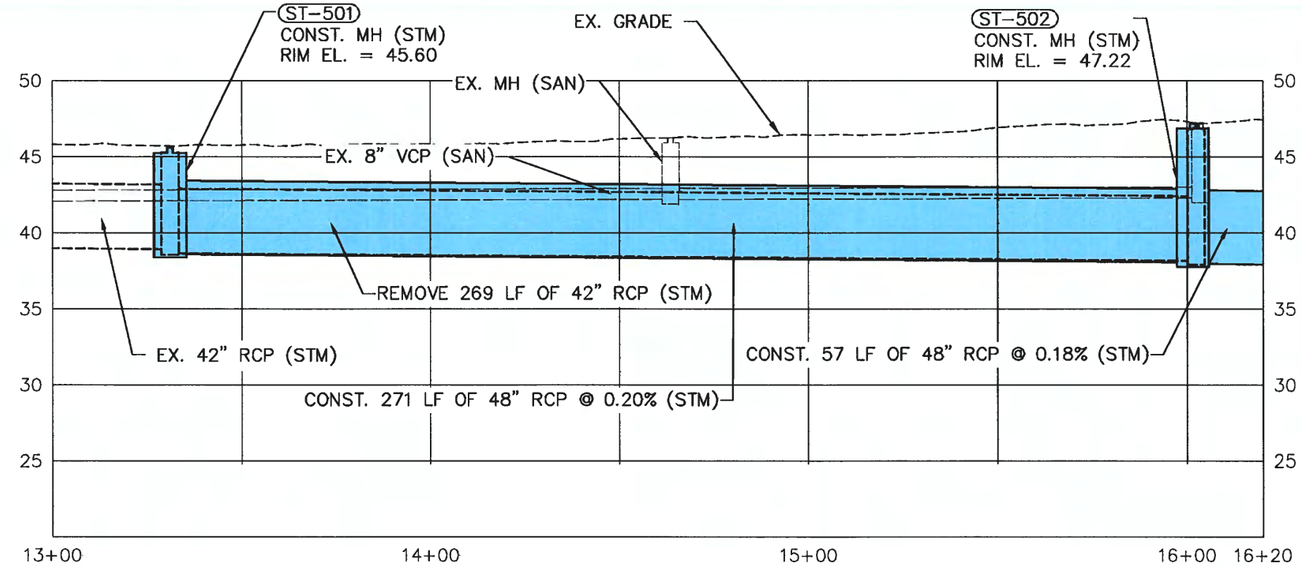

NOT FOR CONSTRUCTION
CONCEPTUAL

DES:
DRN:
CKD:
DATE: 9/05/18

CITY of TAMPA
Department of Transportation and Stormwater Services
Stormwater Engineering Division

SOUTHEAST SEMINOLE HEIGHTS
FLOOD RELIEF N949

SHEET 36 OF 49

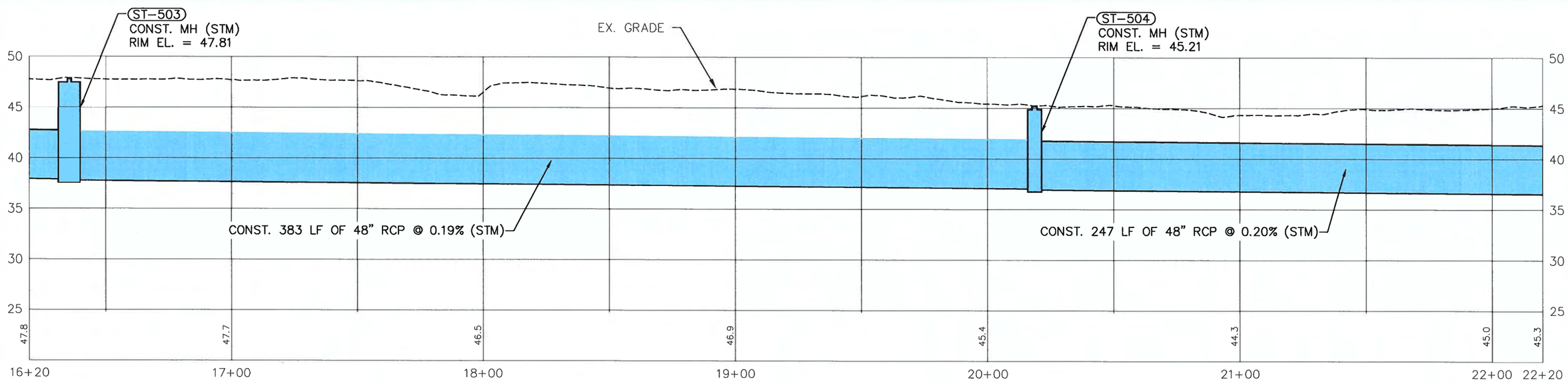

NOT FOR CONSTRUCTION
CONCEPTUAL

DES:
DRN:
CKD:
DATE: 9/05/18

CITY of TAMPA
Department of Transportation and Stormwater Services
Stormwater Engineering Division

SOUTHEAST SEMINOLE HEIGHTS
FLOOD RELIEF N949

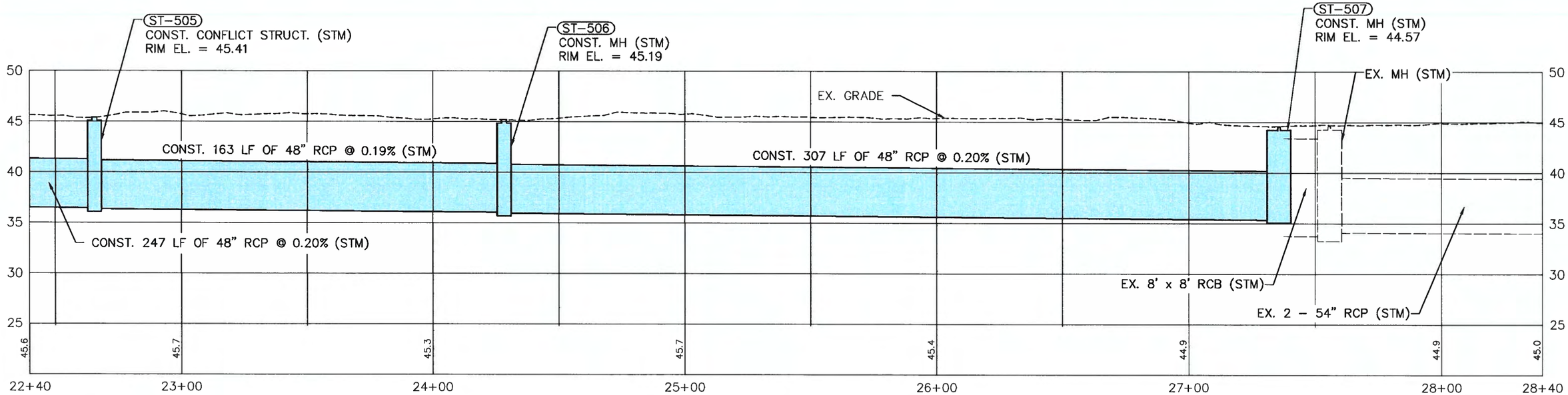

NOT FOR CONSTRUCTION
CONCEPTUAL

DES:
DRN:
CKD:
DATE: 9/05/18

CITY of TAMPA
Department of Transportation and Stormwater Services
Stormwater Engineering Division

SOUTHEAST SEMINOLE HEIGHTS
FLOOD RELIEF N949

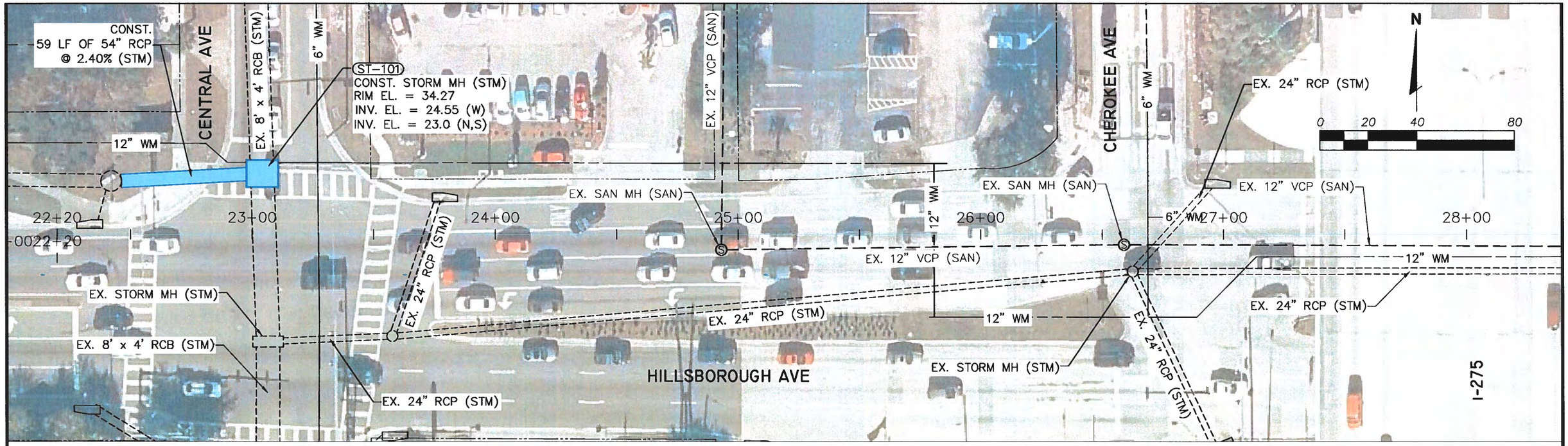

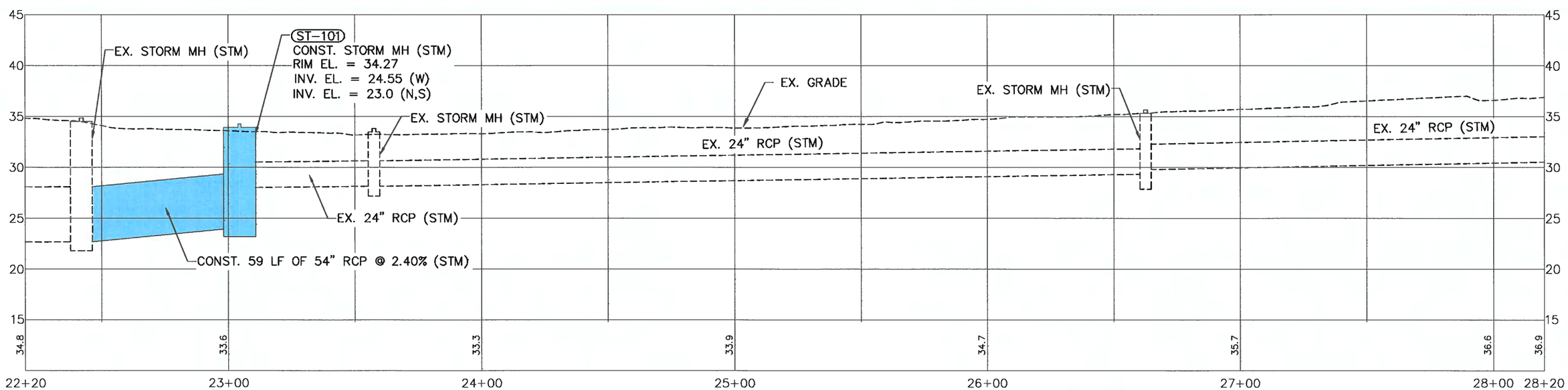

NOT FOR CONSTRUCTION
CONCEPTUAL

DES:
DRN:
CKD:
DATE: 9/05/18

CITY of TAMPA
Department of Transportation and Stormwater Services
Stormwater Engineering Division

SOUTHEAST SEMINOLE HEIGHTS
FLOOD RELIEF N949

SHEET 39 OF 49

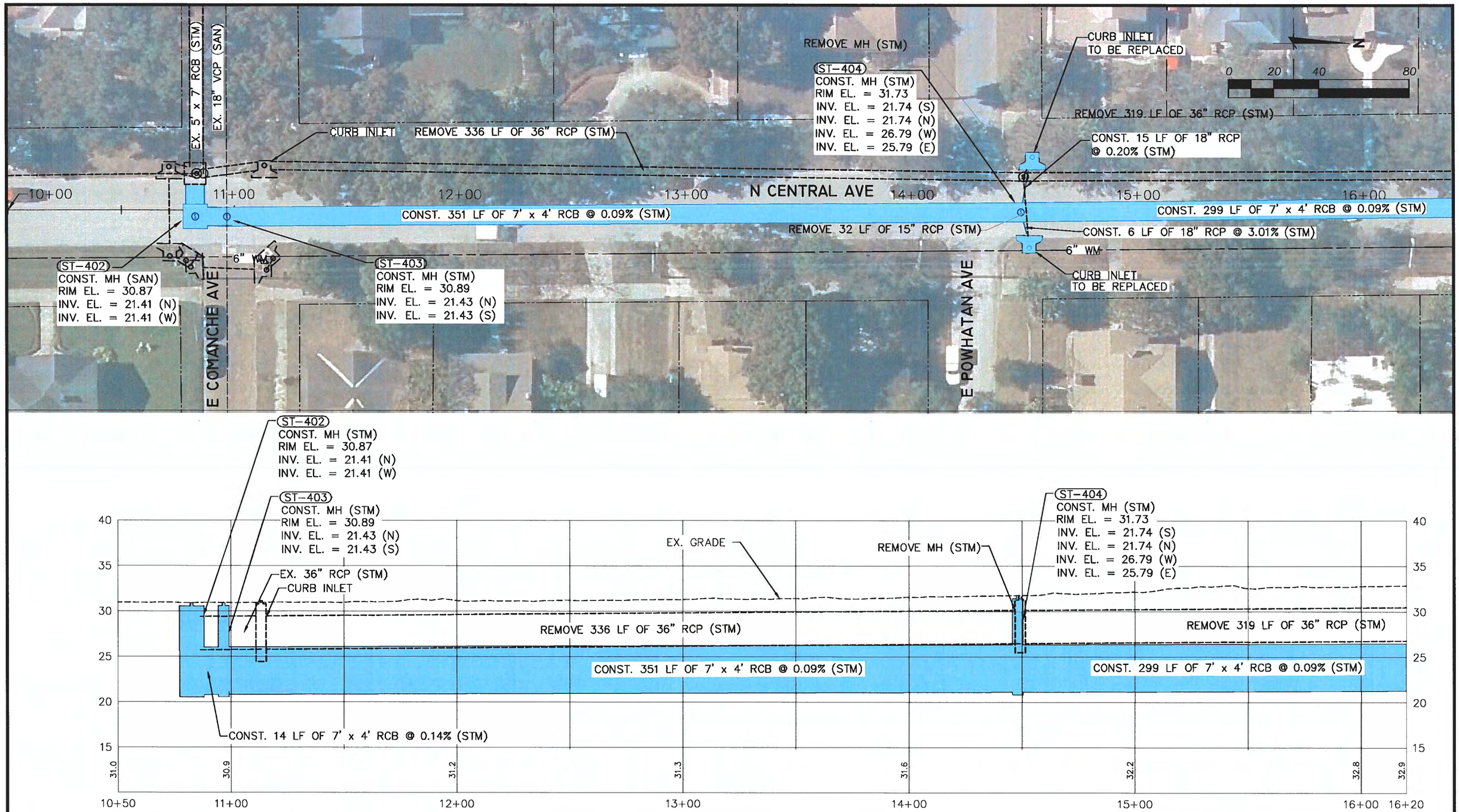

NOT FOR CONSTRUCTION
CONCEPTUAL

DES:
DRN:
CKD:
DATE: 9/05/18

CITY of TAMPA
Department of Transportation and Stormwater Services
Stormwater Engineering Division

SOUTHEAST SEMINOLE HEIGHTS
FLOOD RELIEF N949

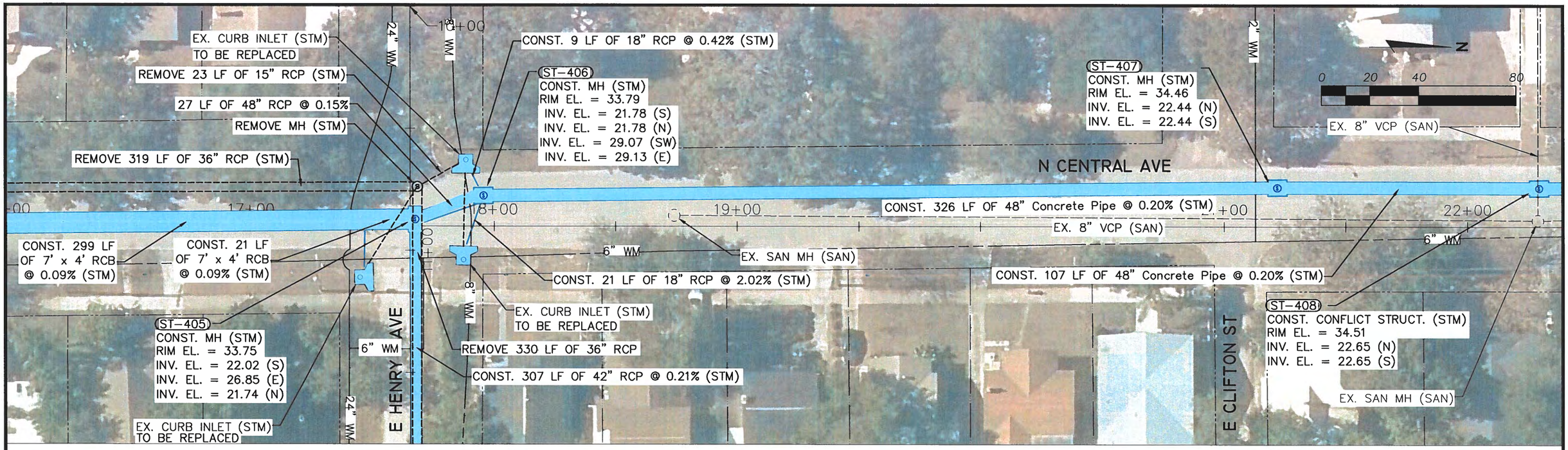

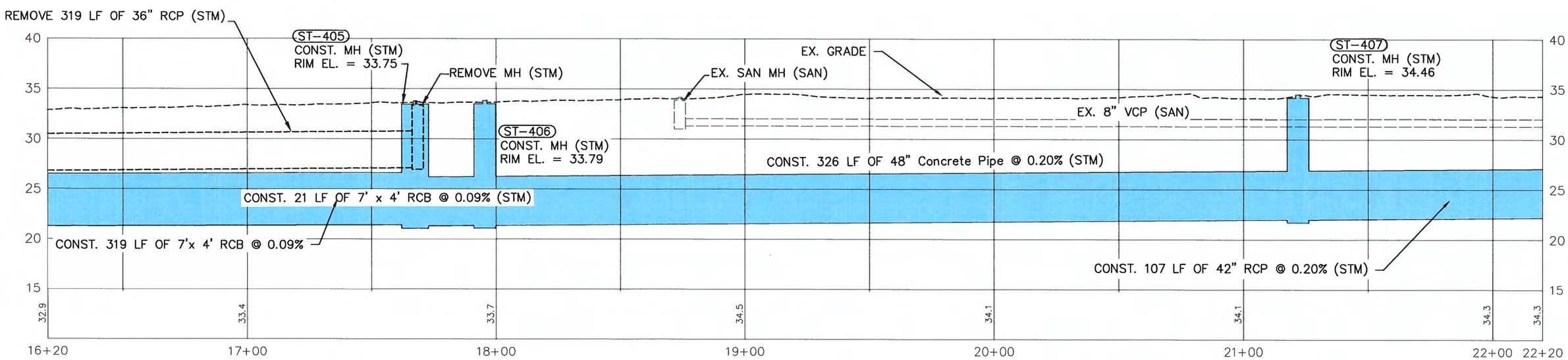

NOT FOR CONSTRUCTION
CONCEPTUAL

DES:
DRN:
CKD:
DATE: 9/05/18

CITY of TAMPA
Department of Transportation and Stormwater Services
Stormwater Engineering Division

SOUTHEAST SEMINOLE HEIGHTS
FLOOD RELIEF N949

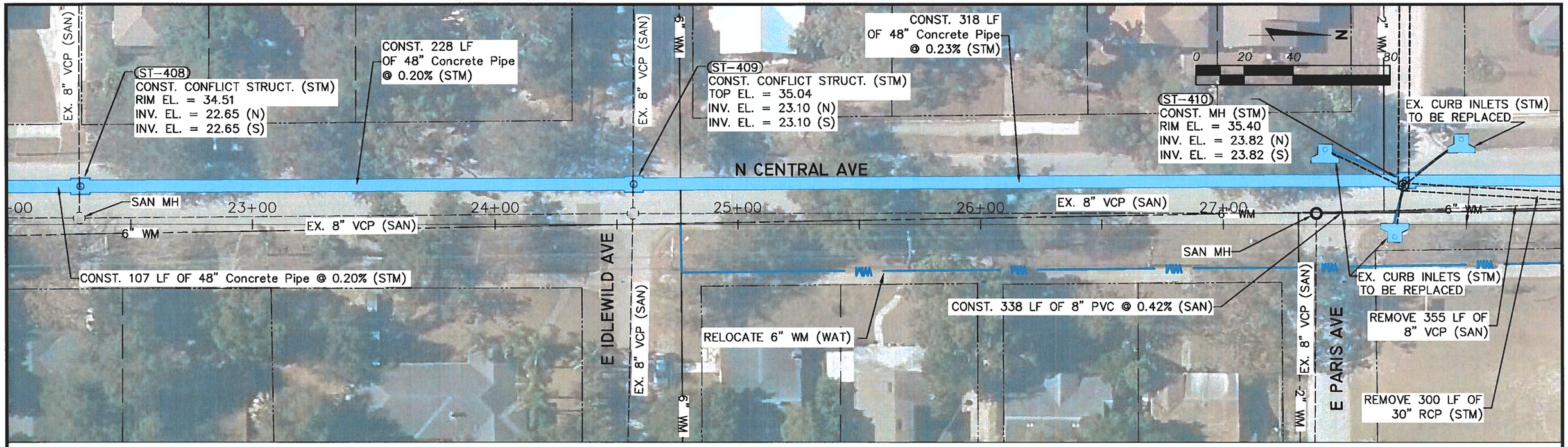

NOT FOR CONSTRUCTION
CONCEPTUAL

DES:
DRN:
CKD:
DATE: 9/05/18

CITY of TAMPA
Department of Transportation and Stormwater Services
Stormwater Engineering Division

SOUTHEAST SEMINOLE HEIGHTS
FLOOD RELIEF N949

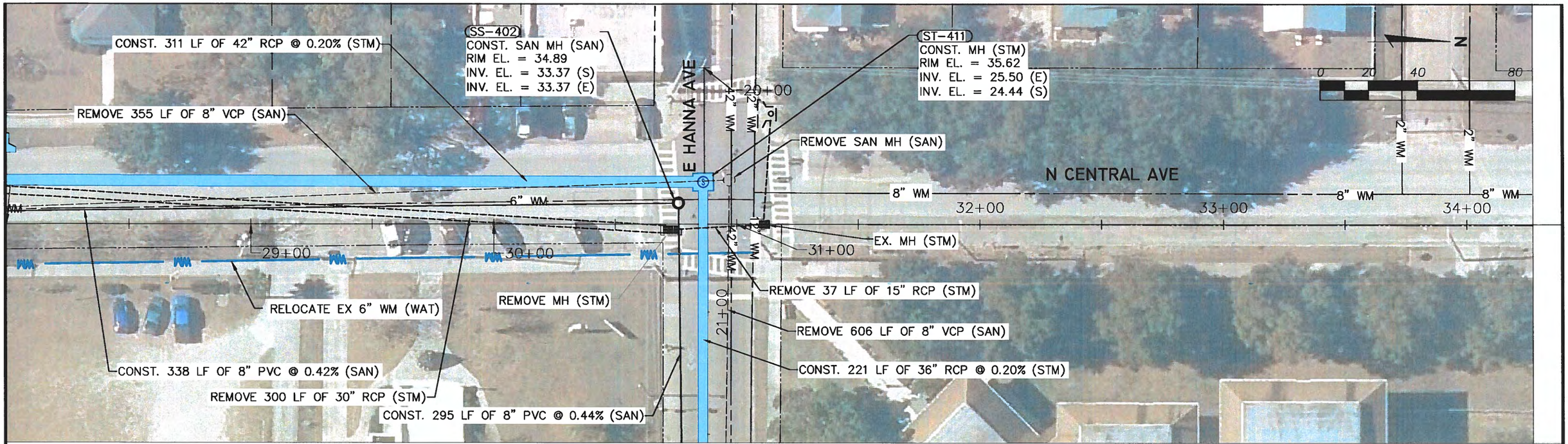

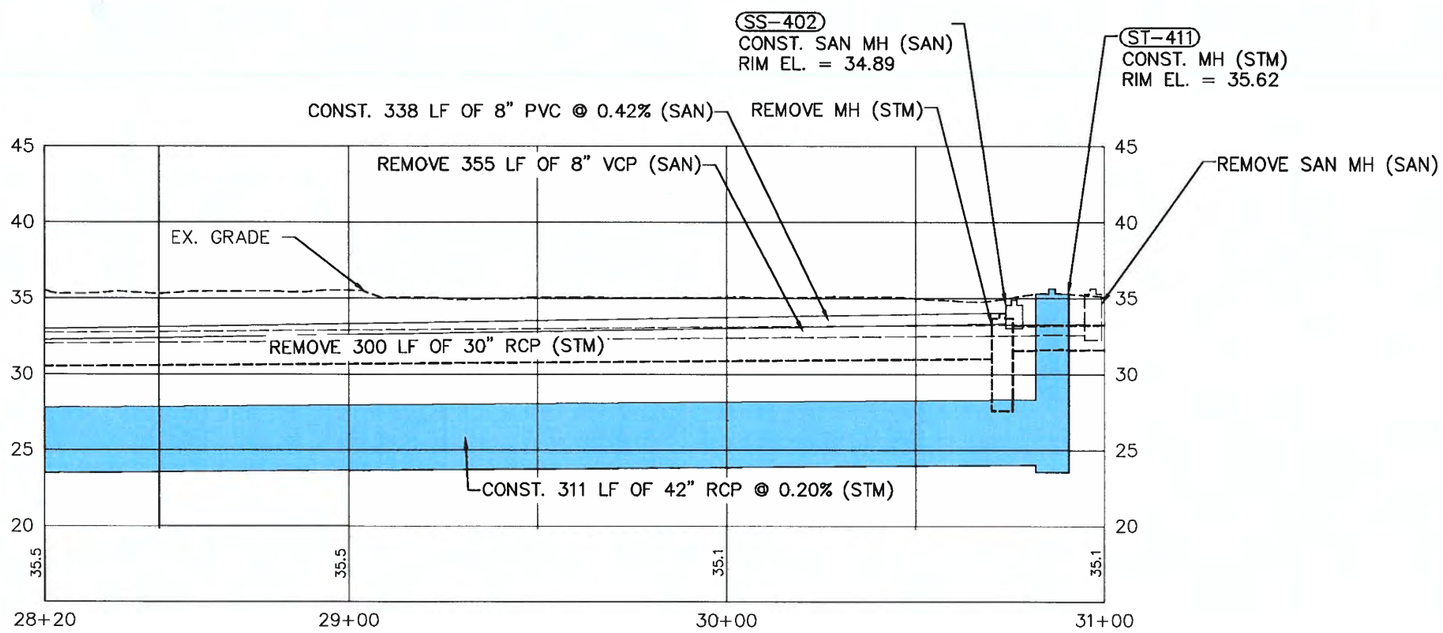

NOT FOR CONSTRUCTION
CONCEPTUAL

DES:
DRN:
CKD:
DATE: 9/05/18

CITY of TAMPA
Department of Transportation and Stormwater Services
Stormwater Engineering Division

SOUTHEAST SEMINOLE HEIGHTS
FLOOD RELIEF N949

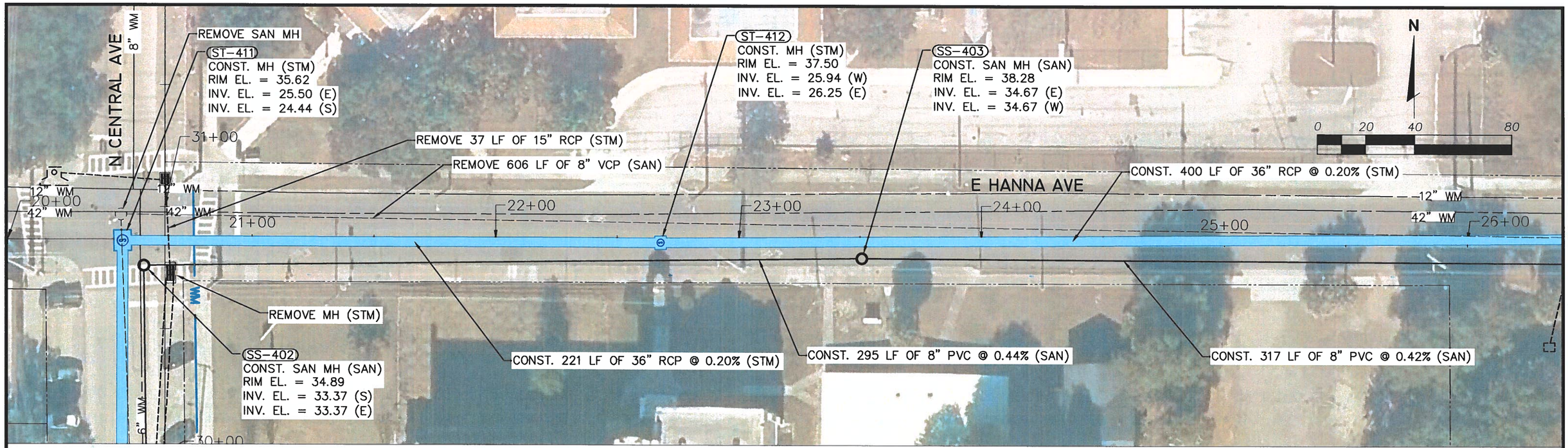

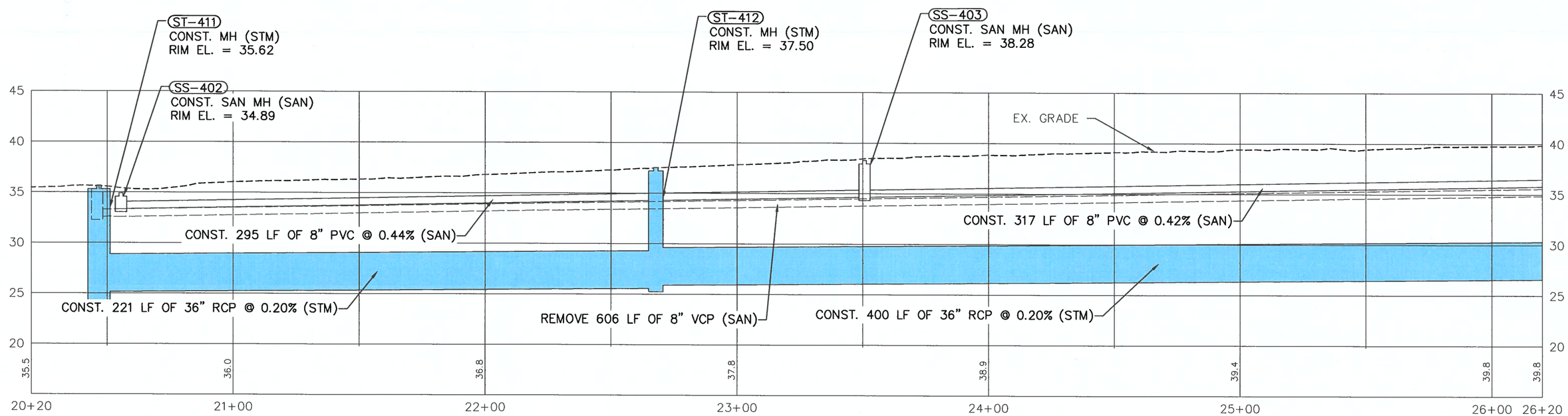

NOT FOR CONSTRUCTION
CONCEPTUAL

DES:
DRN:
CKD:
DATE: 9/05/18

CITY of TAMPA
Department of Transportation and Stormwater Services
Stormwater Engineering Division

SOUTHEAST SEMINOLE HEIGHTS
FLOOD RELIEF N949

SHEET 44 OF 49

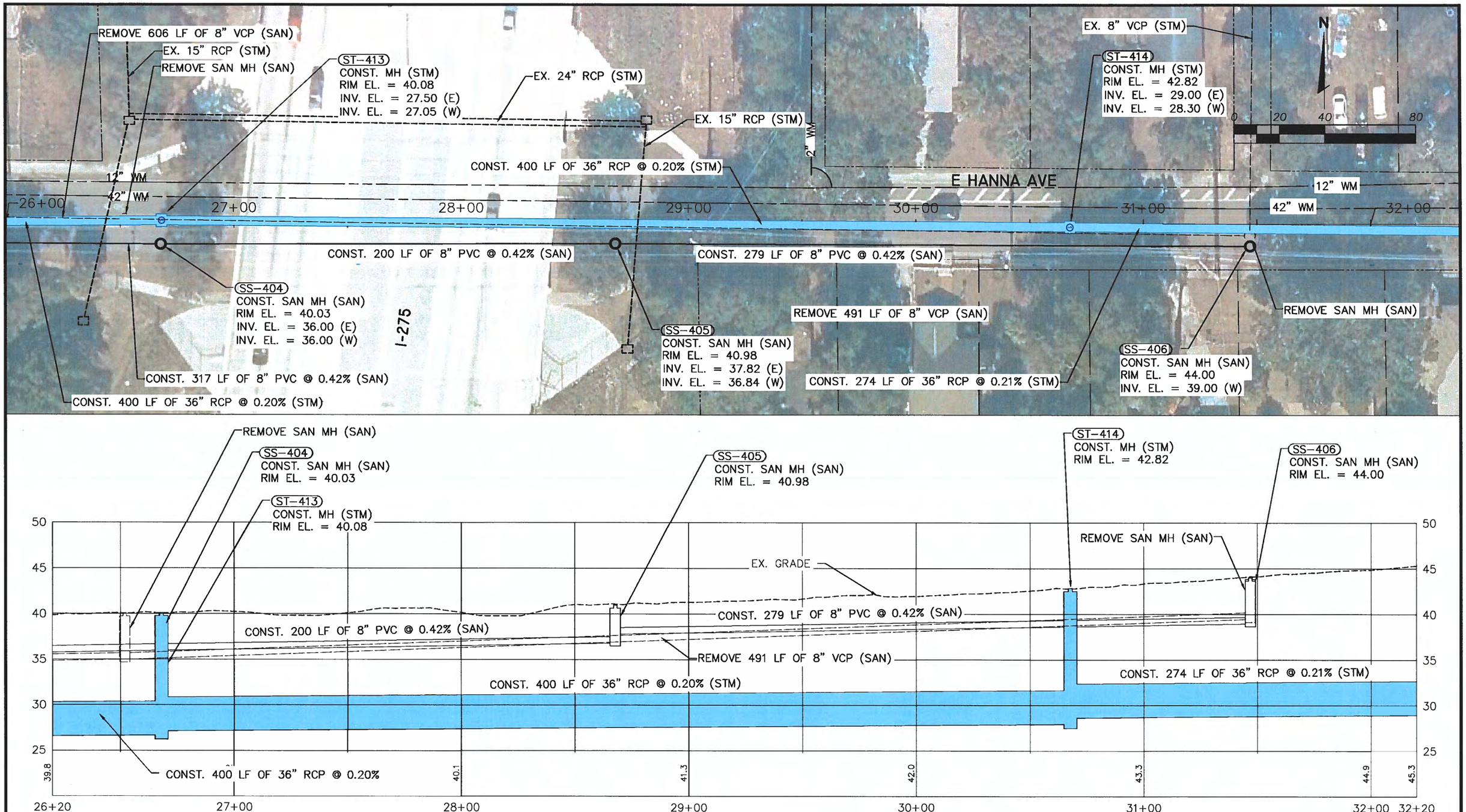

NOT FOR CONSTRUCTION
CONCEPTUAL

DES:
DRN:
CKD:
DATE: 9/05/18

CITY of TAMPA
Department of Transportation and Stormwater Services
Stormwater Engineering Division

SOUTHEAST SEMINOLE HEIGHTS
FLOOD RELIEF N949

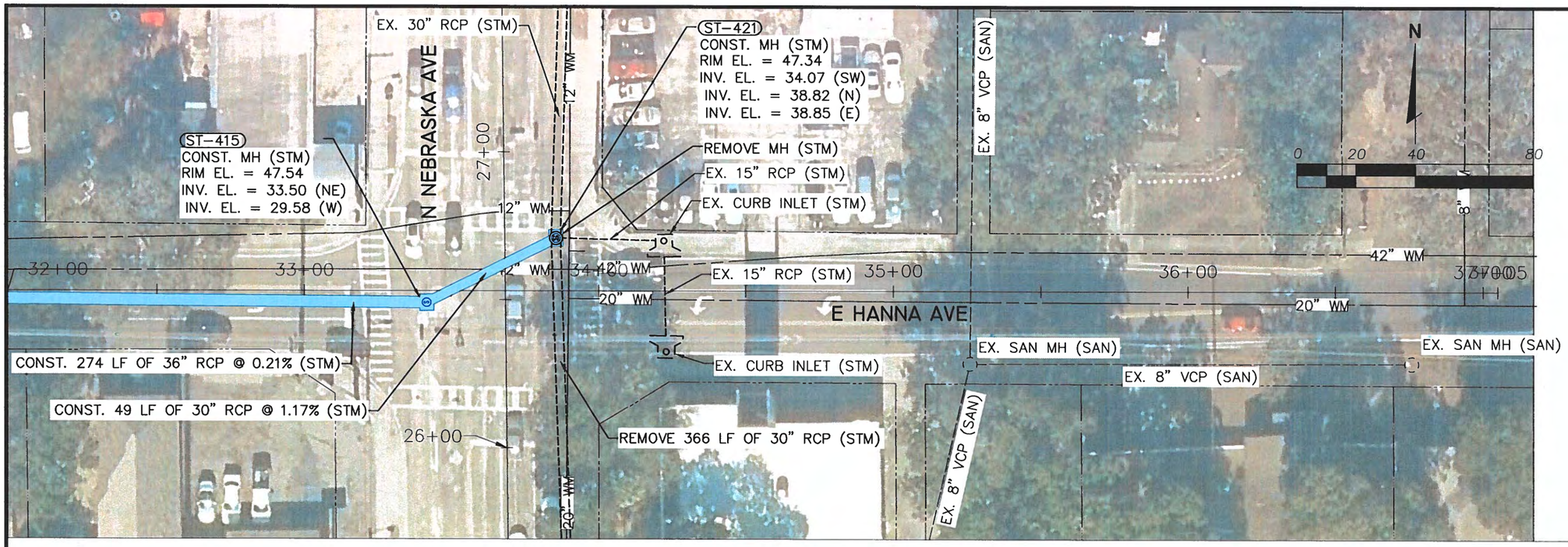

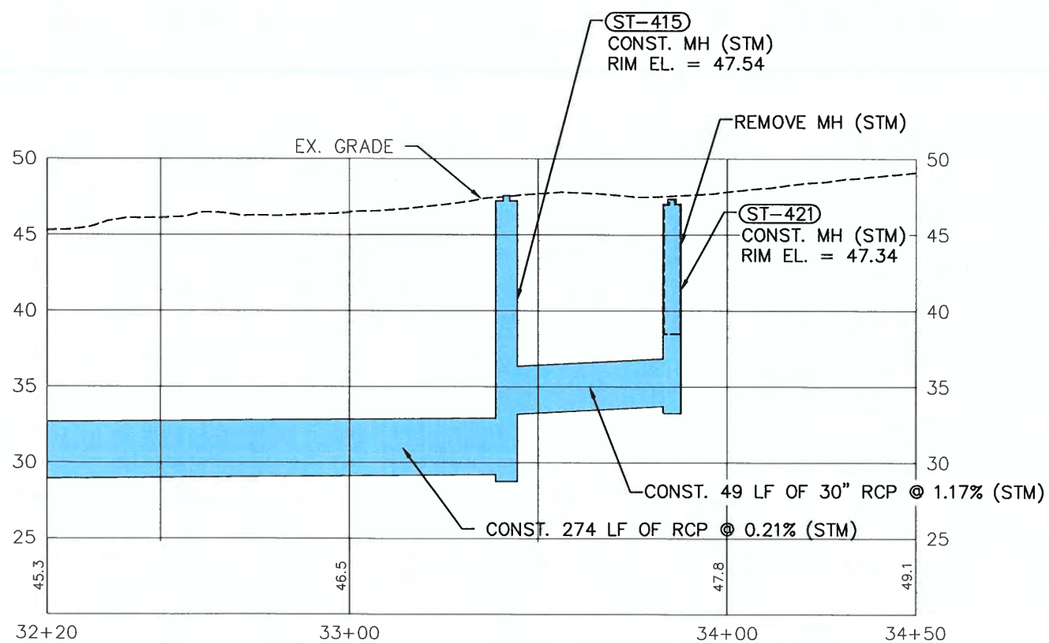

NOT FOR CONSTRUCTION
CONCEPTUAL

DES:
DRN:
CKD:
DATE: 9/05/18

CITY of TAMPA
Department of Transportation and Stormwater Services
Stormwater Engineering Division

SOUTHEAST SEMINOLE HEIGHTS
FLOOD RELIEF N949

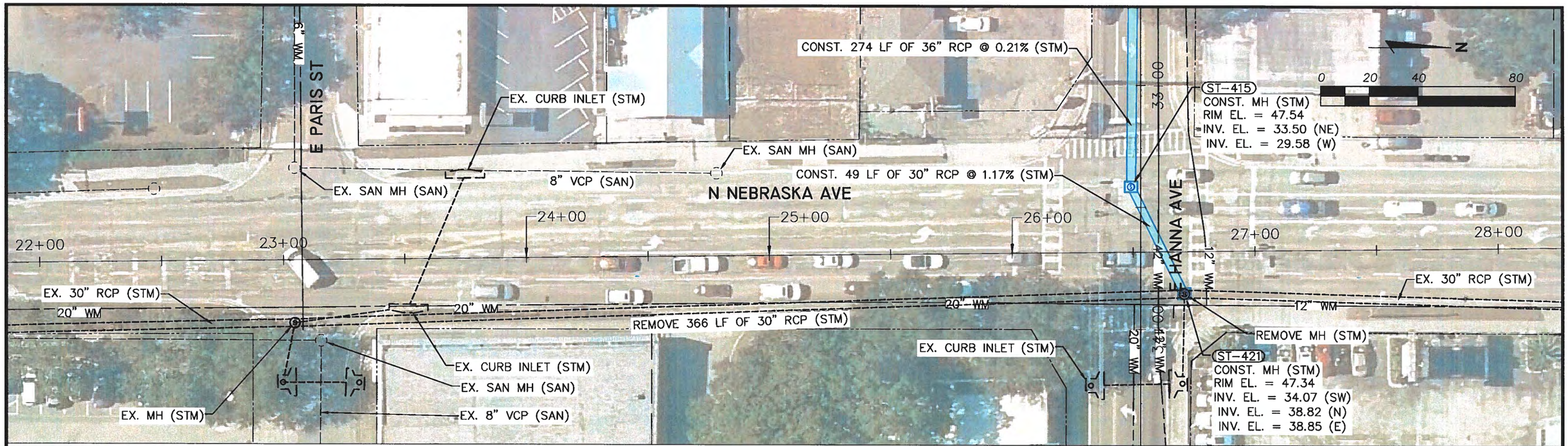

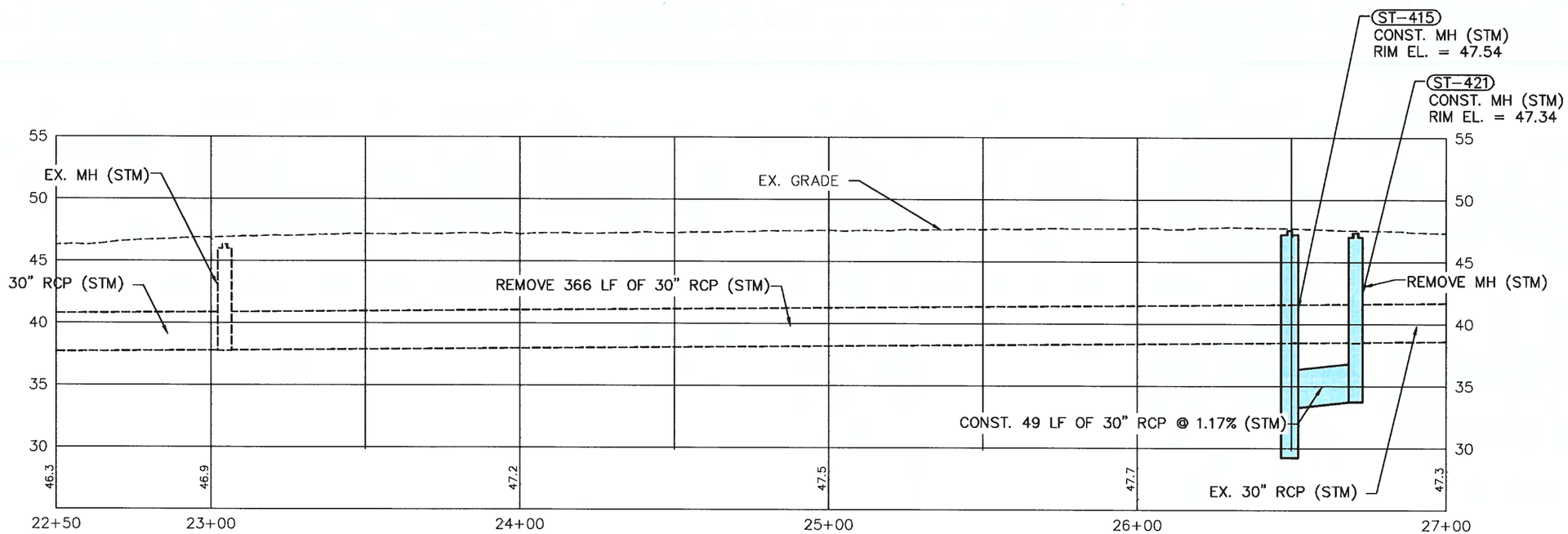

NOT FOR CONSTRUCTION
CONCEPTUAL

DES:
DRN:
CKD:
DATE: 9/05/18

CITY of TAMPA
Department of Transportation and Stormwater Services
Stormwater Engineering Division

SOUTHEAST SEMINOLE HEIGHTS
FLOOD RELIEF N949

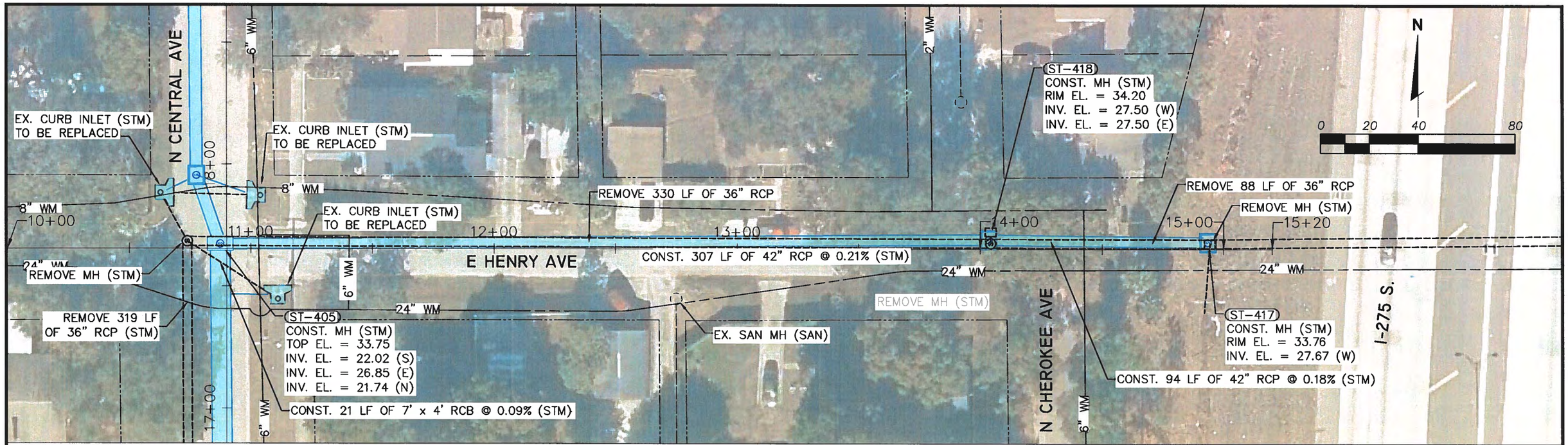

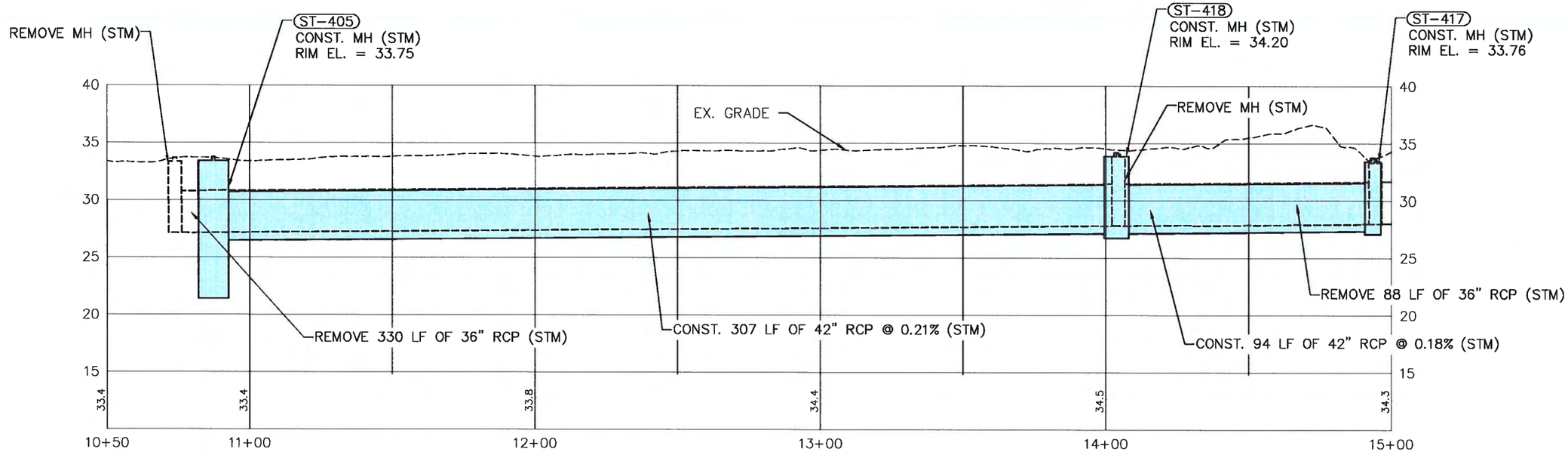

NOT FOR CONSTRUCTION
CONCEPTUAL

DES:
DRN:
CKD:
DATE: 9/05/18

CITY of TAMPA
Department of Transportation and Stormwater Services
Stormwater Engineering Division

SOUTHEAST SEMINOLE HEIGHTS
FLOOD RELIEF N949

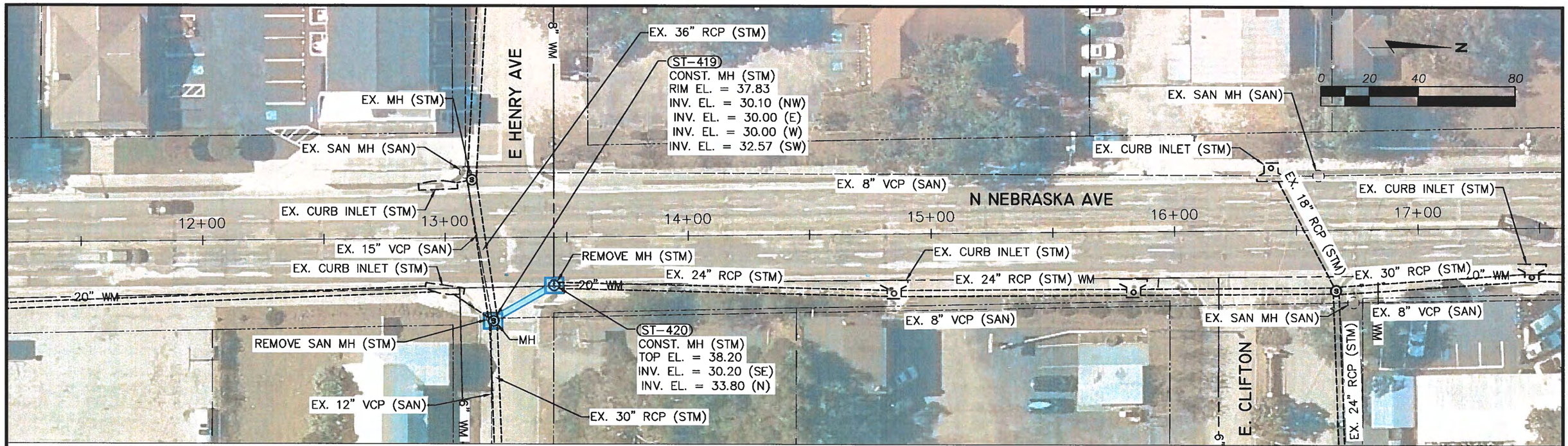

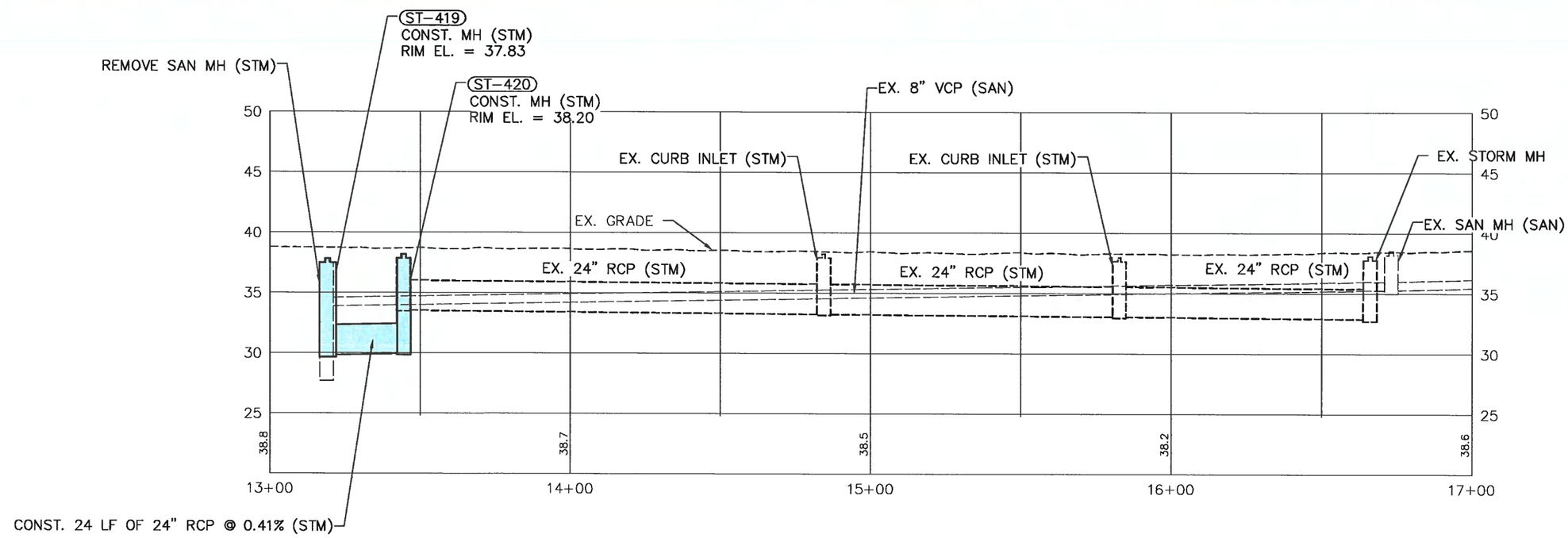

NOT FOR CONSTRUCTION
CONCEPTUAL

DES:
DRN:
CKD:
DATE: 9/05/18

CITY of TAMPA
Department of Transportation and Stormwater Services
Stormwater Engineering Division

SOUTHEAST SEMINOLE HEIGHTS
FLOOD RELIEF N949
PNP 4-10