CITY OF TAMPA, FLORIDA - RFQ
c/o Contract Administration Department
306 E. Jackson Street # 280A4N
Tampa, FL 33602

20-C-00001; HFC AWTP Master Plan Improvements, Phase I Design-Build

PUBLIC ANNOUNCEMENT IN COMPLIANCE WITH REQUIREMENTS OF SECTION 287.055, FLORIDA STATUTES (CONSULTANTS' COMPETITIVE NEGOTIATION ACT) APPLICABLE LAW, EXECUTIVE ORDERS, RULES, REGULATIONS, AND THE CITY'S STANDARD PROCEDURES. A NOTICE OF INTENT TO AWARD SHALL BE POSTED, IF AT ALL, ON THE CITY'S WEBSITE ACCESSIBLE BY UTILIZING THIS WEBSITE LINK: www.tampagov.net/contract-administration/programs/architectural-engineering-construction-and-related-rfqs

RFQ - 20-C-00001: The City of Tampa Wastewater Department desires to obtain Design-Build Services for rehabilitation and construction of various facilities at the Howard F. Curren Advanced Wastewater Treatment Plant (HFC AWTP) located at 2700 Maritime Boulevard.

Services will be provided under a contract with negotiated fixed fees for the assessment of the needs for the rehabilitation and improvement projects, selection and evaluation of design alternatives and requirements, development of construction sequencing and project phasing needed to maintain plant operations and reduce construction cost, final design, permitting, project management, overhead, profit, and development of a guaranteed maximum price with appropriate surety bonds. Services will also include, but not limited to, engineering investigations, site planning, cost estimating, advertising and administration of subcontracts, start-up, preparation of O&M manuals, training, and all related work required for a complete project.

The successful Design-Build Firm will provide a Team that has successfully completed projects of similar size and complexity, has the resources to simultaneously design and construct multiple projects, and has the experience and knowledge of the requirements to complete treatment plant projects while maintaining 24/7 treatment plant operations.

The scope of the design-build contract will include the rehabilitation of existing facilities/buildings and construction of new facilities identified in the design criteria package which is based on the recommendations provided in the HFC AWTP Master Plan (June 2018). The design criteria package also includes additional projects that may be added based changes in priorities and available funding.

Proposed budget is estimated at $254,000,000

Background: The HFC AWTP was originally constructed in 1950. It has been expanded over the years and currently is permitted to treat 96-MGD with a Type I two-stage, high rate (pure oxygen and fine bubble aeration) activated sludge biological nitrification/ denitrification domestic wastewater treatment plant. This plant is operated to discharge advanced wastewater treated, high-level disinfected and dechlorinated effluent to Hillsborough Bay. Residuals generated by this facility are dewatered for land application as a Class B residual. Currently, annual average daily flows (AADF) are 60 MGD with peak hourly flows (PHF) of 200 MGD.

A pre-submittal conference will be held at 10:00 A.M. Tuesday, October 8, 2019, in the WW Collections Training Building, 2515 Guy N. Verger Blvd, Tampa, FL 33605. The only site visit/walk-through will follow the meeting. Firms must email names, cell phone numbers and companies represented for all attendees a minimum 24 hours in advance to deann.wheeler@tampagov.net and richard.birchmire@tampagov.net to obtain security clearance and to be registered in the treatment plant emergency notification software. Attendance is not mandatory.

The Master Plan Volumes 1, 2, and 3 are posted at https://www.tampagov.net/wastewater/master-plan . Additional material may be found at demandstar.com and at: https://www.tampagov.net/contract-administration/programs/architectural-engineering-construction-and-related-rfqs .

Questions may be directed to Jim Greiner, P.E., Contract Administration, City of Tampa, (813) 274-8598, or E-Mail jim.Greiner@tampagov.net.

An individual or entity ("Firm") responding to this RFQ must provide evidence of any required licenses, certificates, or registrations with its submission or within 10 days thereof in order to be considered. The City shall own all ideas, documents, plans, and materials developed as a result of this solicitation and Firm is informed same shall be subject to reuse in accordance with Section 287.055(10), Florida Statutes. Firm (i) confirms it has read and is familiar with Section 119.071(3), Florida Statutes regarding certain building plans, blueprints, schematic drawings, which depict the internal layout and structural elements of a building, facility, or other structure owned or operated by the City or other agency that are per said section exempt from Section 119.07(1), Florida Statutes and Section 24(a), Art. I of the Florida Constitution ("Exempt Plans") and (ii) agrees Firm shall remain in compliance with same, including maintaining the exempt status of such Exempt Plans for so long as they are held by Firm or otherwise in its possession. The City may cancel, withdraw, or modify this RFQ at any time and reserves the right to reject any or all responses and to waive irregularities, formalities, and informalities as it determines in the City's best interest.

Firms desiring to provide these services to the City must submit a single electronic file in searchable PDF format, smaller than 3MB, that includes a Letter of Interest addressed to Brad L, Baird, P.E., Chairman, and referring to this RFQ by number, together with a Statement of Qualifications and any supplemental material allowing evaluation for further consideration (short-listing) based upon the following criteria/point system: Successful Comparable Project Experience, (40 pts); Municipal Wastewater Treatment Plant Experience (35 pts); Workload and Availability (5 pts); Past Performance/Low amount of City Work (5 pts); Standard Form #A305 (5 pts); Planned WMBE/SLBE Solicitation & Utilization, Form MBD 10 & 20 (10 pts).

The PDF file must be E-Mailed to ContractAdministration@tampagov.net BEFORE 2 P.M., Thursday, November 14, 2019. As a courtesy, the City will endeavor provide an email acknowledgement usually sent within a few days after submission receipt (submissions received on the day of the deadline may not be acknowledged before the deadline or at all). It is Firm's responsibility to confirm its submission (PDF file) has been received.

RFQ TRANSMITTAL MEMORANDUM
FOR A SUBMITTAL TO THE CITY OF TAMPA, FLORIDA

TRANSMITTAL DATE:

RFQ NO. & TITLE: 20-C-00001 HFC AWTP Master Plan Improvements Phase 1 Design-Build

TO: Brad L. Baird, P. E., Chairman Selection & Certification Committee (CCNA)
c/o Contract Administration Department via ContractAdministration@tampagov.net
306 East Jackson Street, 4th Floor North, Tampa, Florida 33602

SUBMITTER ("Firm") NAME:

FEDERAL TAX ID#:

FIRM TYPE: ☐ Individual/Sole Proprietor ☐ Joint Venture (JV)* ☐ Partnership (PN)* ☐ Corporation
☐ Limited Liability Company ☐ Other: _____

FIRM CONTACT NAME: EMAIL: PHONE:

CERTIFICATIONS: Firm is licensed, permitted, and certified as required to do business in Florida: ☐ Yes | ☐ No
License/registration/certification no(s): _____

Per §287.133, Fla. Stat., individuals or entities (including those meeting the §287.133, Fla. Stat. definition of "affiliate") placed on the convicted vendor list ("List") following a conviction for public entity crimes may not submit a bid, proposal, or reply ("Response") on a contract to provide any goods or services to a public entity, may not submit a Response on a contract with a public entity for the repair or construction of a public building or public work, may not submit a Response for leases of real property to a public entity, and may not be awarded or perform work as a contractor, supplier, subcontractor, or consultant under a contract with any public entity; and may not transact business with any public entity in excess of the threshold amount provided in §287.017, Fla. Stat. for CATEGORY TWO for a period of 36 months from the date of placement on the List. Neither Firm nor its affiliates have been placed on the List: ☐ Yes | ☐ No

Firm's own initial application for employment has criminal history screening practices similar to those contained in Chapter 12, Article VI, Tampa Code (responses, whether "Yes" or "No", are for informational purposes only and will not be used as a basis for award or denial, or for any protest): ☐ Yes | ☐ No

Firm shall comply with all applicable governmental rules & regulations, including the City's Ethics Code (Sec. 2-522, Tampa Code). The City's Charter & Ethics Code prohibit any City employee from receiving any substantial benefit or profit out of any award or obligation entered into with the City, or from having any direct or indirect financial interest in effecting any such award or obligation. If Firm is successful, it shall ensure no City employee receives any such benefit or interest as a result of such award (See Sec.2-514(d),Tampa Code): ☐ Yes | ☐ No

Firm is not in arrears and is not in default upon any obligation to the City of Tampa: ☐ Yes | ☐ No

Firm agrees that if the City of Tampa determines Firm has participated in any collusive, deceptive, or fraudulent practices with regard to this submittal, in addition to any other remedy it may exercise, the City will have the right to debar Firm and deem invalid any contract let under such circumstances: ☐ Yes | ☐ No

Data or material Firm asserts to be exempted from public disclosure under Chapter 119, Fla. Stat., is submitted in a separate, single electronic searchable PDF file labeled with the above RFQ number and the phrase "Confidential Material", which identifies the data/material to be protected, states the reasons the date/material is exempt from public disclosure, and the specific Florida statute allowing such exemption (if "No" or otherwise, then Firm waives any possible or claimed exemption upon submission, effective at opening): ☐ Yes | ☐ No

FAILURE TO COMPLETE THE ABOVE MAY RESULT IN FIRM'S SUBMITTAL BEING DECLARED NON-RESPONSIVE

Authorized Signature (wet): _____
[SEAL] Printed Name: _____
Title: ☐ Sole Prop ☐ Pres ☐ Sr VP ☐ Gen Ptnr ☐ LLC Auth.Mbr/Mgr
☐ Other _____ (attach proof of authority)

STATE OF
COUNTY OF
The forgoing instrument was sworn (or affirmed) before me this ____ day of _____, 20____ by _____ either in his/her individual capacity or where Firm is an entity as the _____ of _____, on behalf of such entity. He/She is ☐ personally known to me or ☐ produced a/n _____ state driver's license as identification.

[NOTARY SEAL] _____
Printed Name: _____ Notary Public, State of _____
My Commission Expires: _____ Commission No:_____

* With submittal or within 10 days thereafter, Firm must provide a signed copy of the complete agreement between all JV/PN members indicating respective roles, responsibilities, and levels of participation.

Design Criteria Package

for

Contract 20-C-00001; Howard F. Curren
Advanced Wastewater Treatment Plant
Master Plan Improvements, Phase 1 – Design-Build

PREPARED BY:

Christine K. Bruno, P.E. – PROJECT COORDINATOR
CONTRACT ADMINISTRATION DEPARTMENT

CITY OF TAMPA
SEPTEMBER 2019

DESIGN CRITERIA PACKAGE

1. Purpose

The City of Tampa has prepared this Design Criteria Package for RFQ: 20-C-00001 Design-Build Services related to the Howard F Curren Advanced Wastewater Treatment Plant (HFC AWTP) Master Plan Improvements, Phase I. The HFC AWTP master plan prepared in June 2018 was developed to identify improvements and general scopes of work needed at the treatment plant. The master plan will be used as a guideline for completing the necessary improvements and this project will include the top priority improvements selected from the master plan. Additional improvements may be added to the project depending on changes in priorities and available funding. A list of these improvements, general scopes of work, and preliminary completion sequence is provided below. The firm will be assigned improvements based the completion sequences; however this sequence may be modified based changes in priorities, available funding, and construction phasing that the Design-Build team may identify. It is the City's intent that the improvements be accomplished through a design-build approach and be completed through the development and execution of multiple Guaranteed Maximum Price (GMP) proposals. The City may, at its option, directly purchase certain products for use on this contract.

1.1 The scope shall include, but not be limited to the following:

- Comprehensive design services to include:
    - Evaluation and development of design requirements and alternatives
    - Development of design plans and construction documents for the selected improvements and associated components
- Coordinating, applying for and obtaining regulatory permits
- Preparing plans and estimates for construction permits to be obtained by the City
- Preconstruction services with development of Guaranteed Maximum Price (GMP) for the construction of selected improvements and associated components
- Development of construction sequencing and project phasing needed to maintain plant operations and reduce construction cost
- Installation and construction for the complete and working operations of the selected improvements and associated components
- Maintaining operations during construction
- Engineering services during construction to include: attending meetings, responding to Requests for Information (RFI), reviewing submittals, and commissioning services
- Start-up and testing
- Development of Operation and Maintenance Manuals
- Training staff in the operation of the selected improvements
- Estimated Total Budget: $254,000,000

1.2 This document provides the criteria for the design and construction of the improvements at the HFC AWTP. The intent is to list the minimum design-build criteria necessary for achieving these improvements.

1.3 This package is not a specification or prescriptive checklist and is not intended to replace the professional judgment by a competent licensed professional engineer after coordination with the end-user and stakeholders of the City of Tampa.

1.4 A master plan for the HFC AWTP was prepared in June 2018 and will be used as a guide for the improvements at the HFC AWTP. This project will include the top priority improvements selected from the master plan; however, some improvements identified in master plan are not included since these projects will be completed through other contracts. A list and general scopes of work for the improvements included in the project is provided below. Please note that it is not the intent to prepare and execute a GMP proposal for each listed improvement. GMP proposals will likely include several improvements. The number of GMP proposals and improvements included in each proposal will depend on available funding, priorities, construction sequences that are developed during the project, and other factors that may be needed to meet the project goals and objectives.

2. Background – Treatment System

The Howard F. Curren Advanced Wastewater Treatment Plant (HFC AWTP) began operation in the early 1950's as a primary treatment plant with anaerobic digestion. In the 1970's the plant was expanded to an annual average capacity of 60 million gallons per day (MGD) and converted to advanced wastewater treatment plant. In the 1990's the plant was expanded to treat 96 MGD annual average daily flow (AADF) with a Type I two-stage, high rate (pure oxygen and fine bubble aeration) activated sludge biological nitrification/denitrification domestic wastewater treatment plant. This plant is operated to discharge advanced wastewater treated, high-level disinfected and dechlorinated effluent to Hillsborough Bay and chlorinated reclaimed water to industrial customers, McKay Bay and Mosaic, and public access reuse customers. Residuals generated by this facility can be dewatered for land application as a Class B residual or may be heat dried to meet Class AA standards for distribution and marketing; however the City's dryer is currently not functional. Currently, annual average daily flows are 60 MGD with peak flows of 190 MGD.

The HFC AWTP involves three main stages consisting of preliminary and primary treatment, secondary treatment or biological nutrient removal (BNR) process and tertiary treatment or denitrification (see Figure 1 – Howard F Curren Advanced Wastewater Treatment Plant Flow Diagram, HFC AWTP Master Plan (June 2018)).

The preliminary treatment train includes pre-aeration in Junction Chamber No. 1, Screening, Grit Removal, Grit Conditioning, and Sewage Receiving. After preliminary treatment, wastewater flows to

the eight (8) rectangular primary sedimentation tanks (PSTs) for primary treatment of wastewater. The eight (8) PSTs are divided into two process trains, PSTs 1-4 and PSTs 5-8. The PSTs are designed to reduce Biochemical Oxygen Demand (BOD) and Total Suspended Solids (TSS) loading to the secondary treatment process by settling out readily settleable suspended solids. Fats, oils, grease, and other floatables are also removed in the PSTs by surface skimming and scum collection equipment.

The Biological Nutrient Removal (BNR) is achieved by the operation of a two-stage activated sludge system. The first stage is high purity oxygen activated sludge operated at a very short Solids Retention Time (SRT) (0.5 days) for carbon removal. The second stage is a conventional activated sludge configuration equipped with diffused aeration. This stage is operated at a higher SRT to achieve complete nitrification. In recent years the conventional activated sludge process has been operated to achieve some denitrification as well during part of the year, by operating the first two of the six zones as anoxic with a recycle of some of the nitrified effluent to the head of the reactors.

The BNR process is followed by 32 coarse sand denitrification filters to achieve additional nitrogen removal through the addition of methanol. These filters were designed to reduce the TSS and Total Nitrogen (TN) to meet the surface water annual average permit limits of 5 mg/L and 3 mg/L, respectively.

The HFC AWTP utilizes chlorine gas for primary disinfection and sulfur dioxide gas for dechlorination. Both chemicals are delivered in pressurized rail cars. Both chemicals are heated through evaporators to convert the liquid chemical to the gas phase before being mixed with plant reuse water and injected to the effluent water. The chlorine disinfectant solution is injected into the Final Effluent Channel, just upstream of three (3) existing Chlorine Contact Tanks (CCTs) through a diffuser followed by a static mixer. The sulfur dioxide dechlorination solution is injected just downstream of the CCTs in Junction Chamber No. 4. Approximately 10% of the final effluent water from HFC AWTP is sent to a reclaimed water system, while the majority of the flow is sent to a surface water discharge system following dechlorination.

The existing biosolids treatment system at the HFC AWTP processes the solids produced from the primary clarification and secondary clarification processes, as shown in Figure 1. Secondary waste activated sludge (WAS) is sent from the high purity oxygen system to gravity thickeners to be thickened prior to being pumped to the mixed sludge pump station where it is blended with the primary sludge. From the mixed sludge tank the biosolids are sent to anaerobic digestion tanks. Following digestion, the sludge is stored in holding tanks and then dewatered. After dewatering, the biosolids are primarily hauled away for land application. The plant is also permitted to further process biosolids in a heat drying facility to produce a commercialized pelletized product that can be sold; however this facility is currently not functional.

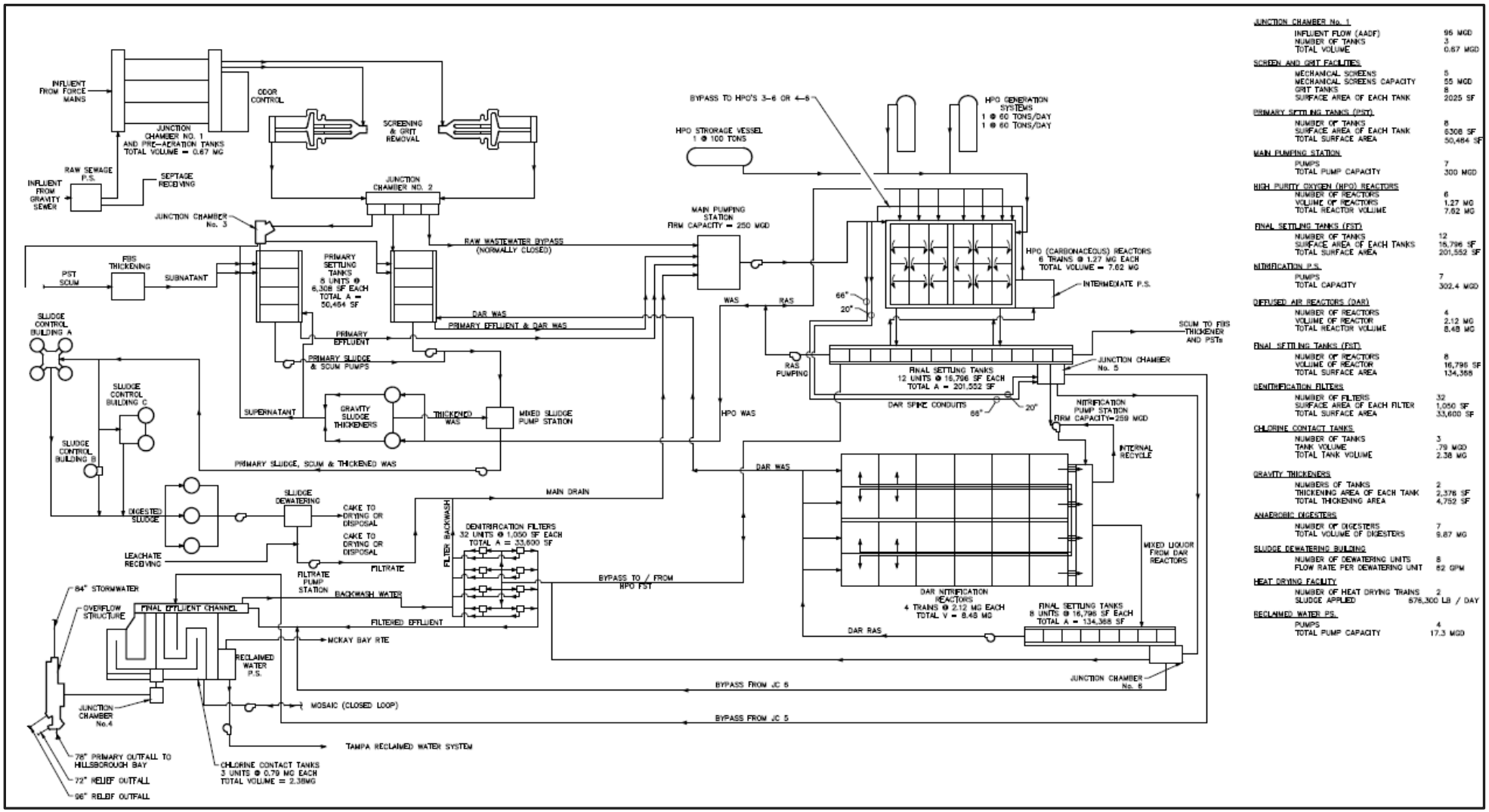

Figure 1. Howard F Curren Advanced Wastewater Treatment Plant Flow Diagram, HFC AWTP Master Plan (June 2018)

3. Design Criteria

The improvements described herein are based on the recommendations provided in the HFC AWTP Master Plan (June 2018). The master plan was developed to identify required improvements and to provide general scopes of work. Final scopes of work will be determined through the design process. All designs shall incorporate necessary components, temporary facilities, and construction sequencing to maintain 24 hour operations of the treatment facility.

3.1 The designs shall be based on providing improvements that will maintain and improve reliability of the treatment plant and meet the needs of the Wastewater Department to effectively and efficiently operate the HFC AWTP. Designs should consider existing conditions and the current and future needs of the Department. It is imperative that the design team and preparer of the construction documents fully understand the operational requirements, permitting, site logistics, and all related requirements to design these improvements accordingly.

The project shall include but may not be limited to the improvements and the general scopes of work provided below. Temporary facilities needed to maintain plant operations will be provided as necessary for each improvement.

- ***Digester Heating System Replacement***
  Improvements includes the construction of a new centralized heating system that can be used to heat all 7-digesters and can fueled by digester gas or natural gas. The system will include heat exchangers, boilers, air separators, expansion tanks, water pumps, feed tanks, pipelines needed to connect the new facility to existing pipes, a new natural gas pipeline connection, all electrical, control systems, and all other appurtenances needed to provide a complete project. The improvements may also need to include a new building to house the equipment.

- ***New Primary Sedimentation Tanks No. 9 – 12 and Primary Sludge Pumping Station No. 3***
  Improvements include the construction of four (4) additional primary sedimentation tanks in similar size to the existing primary sedimentation tanks (PSTs) and a sludge pumping station. The improvements will include the installation of a 96-inch pipe from Junction Chamber No. 2 to the new primary sedimentation tanks and a new 66-inch pipe from the effluent channel of the primary sedimentation tanks to the Main Pump Station. Stress testing and computational fluid dynamics (CFD) modeling of the existing primary sedimentation tanks to evaluate the system performance) and to confirm the size and number of new primary sedimentation tanks may be required. The improvements will include all electrical, control systems, and all other appurtenances needed to provide a complete project. Improvements will also include concrete and minor repairs at Junction Chamber No. 2 and Meter Vault No. 2.

- ***Automated Septage Receiving Facility***

Improvements include the installation of a new septage receiving facility to be constructed near the southwest corner of the plant property. The septage receiving facility consists of a minimum of four standalone, automated sewage receiving stations that discharge to a new submersible pump station. This new pump station is to be connected to either the Raw Sewage Pump Station or the Junction Chamber No. 1. The site work for the new septage receiving facility includes a new entrance and exit off Maritime Boulevard, security fencing and access gate. While located on plant property, the security fencing would separate this site from the rest of the treatment plant. Improvements will also include all electrical, control systems, and all other appurtenances needed to provide a complete project.

- ***Additional Final Sedimentation Tanks No. 21 - 24 and Return Sludge Pumping Station No. 6***
  Improvements include the addition of four (4) additional nitrification final tanks and a return sludge pumping station. The improvements will also include all electrical, control systems, and all other appurtenances needed to provide a complete project.

- ***Building No. 2 – Junction Chamber No. 1 Improvements***
  Improvements include miscellaneous improvements to Junction Chamber No. 1 that include, but not limited, replacement of sluice gates and actuators, repair of stop log grooves, concrete repairs, replacing the influent sampling station, overhead doors, wet well exhaust fans, wet well hatch covers, lighting and lighting panels, bubbler tube system, supply fans, pressure reducing valves, miscellaneous electrical systems, and miscellaneous concrete repairs.

- ***Building No. 4, No. 39, No. 40, No. 51 and No. 52 - Treatment Plant Office and Building Improvements***
  Improvements include the demolition and improvements of existing buildings (Carpenter Shop, Welding Shop, Maintenance Building, Lube Storage Building, and Old Administration Building), and potential construction of new administration office building.

- ***Building No. 5 - Screen & Grit Building No. 2 Improvements***
  Improvements include the replacement of (8) grit pumps, piping and tubing for all four grit tanks and pumps, grit tank rakes and drivers, collectors, rake support beams to be sand blasted and painted, baffles and guides, influent and effluent gate actuators, drain gate and intermediate gate including actuators in the influent channel, sump pumps and piping, organic return flow pipe, air piping and valves, down-legs of the air process piping in the effluent channel, roof drain/ vent pipe, effluent water pipe, and cranes. Electrical upgrades include the replacement of Switchgear 20, Motor Control Center-21, lighting features and electrical conduits. Additional improvements include replacement of windows, overhead doors, doors and concrete repairs. Improvements will also include ventilation improvements to increase the rated air flow capacity and air changes per hour to prevent deterioration of equipment.

- ***Building No. 8 – Junction Chamber No. 3 Miscellaneous Repairs***
  Improvements include the replacement of (2) mixers, sluice gate actuator, concrete repairs, and removal of existing Dissolved Air Flotation (DAF) scum and overflow pipes which are no longer in use.

- ***Building No. 9 – Primary Sedimentation Tanks No. 1 - 4 Improvements***
  Improvements include includes the replacement of effluent weirs, trough, chain and flights, gearboxes and motors for influent sluice gate actuators, replacement of manual backflush sluice gates with motor operated gates, replacement of sludge blanket detector, rehabilitation of scum pit, scum and gravity thickener overflow pipe and valves, removal of DAF scum and overflow pipes, coating tanks, lining decks on effluent side of tanks and other miscellaneous concrete repairs.

- ***Building No. 10 – Main Pump Station Rehabilitation***
  Improvements provide for the rehabilitation of the main treatment plant pumping station including: replacement of (7) pumps, valves, piping, installation of Variable Frequency Drives (VFDs), , spent cooling water pumps, chilled water pumps motors, dewatering pumps , sump pumps, blowers, sluice gates and operators for the influent channel, sluice gate for the main drain and an additional sluice gate on the main pump station deck, condensing unit, backflow preventer, deep bed scrubber, electric heat coils, water break tank, water pressure tank, fuel oil storage tank, containment area waste dumping pit, Halon fire extinguisher system in computer room, fire hydrants, , fire and sprinkler system, life line motor wet well, sampler stations, water cooler and heater equipment, and 11-ton hoist. Electrical upgrades include the replacement of Motor Control Panels, circuit breakers, emergency battery bank, dry transformers, and lighting panel. Instrumentation upgrades include the replacement of return sludge control system, flow recorder/totalizer, level controllers, computer system hardware, oxygen dissolution control panel, multigas detectors, base-7 radio unit, security alarm system, UPS radio system. Additional improvements include cleaning and inspection of main drain, demolition of existing scum pumps which are no longer in use, replacement of roof exhaust fans, windows, doors and overhead doors and concrete repairs.

- ***Building No. 10 – Main Pump Station Discharge Channel Rehabilitation***
  Improvements include the replacement of air process piping with 316 stainless steel pipe, air diffusers; gate and actuator for 66-inch spike line, inspection and rehabilitation of the 66-inch spike line, discharge channel cleaning, concrete rehabilitation, and concrete lining. Improvements will require a bypass pumping system during construction work in the discharge channel and inspection and/or rehabilitation of the spike line.

- ***Building No. 11 - High Purity Oxygen (HPO) Reactor Improvements***

Improvements include the cleaning, concrete repair and lining of influent and effluent channels, replacement of aeration system piping in the influent channel with 316 stainless steel, replacement of (12) gates and actuators (4 reactor influent, 2 swing reactor, 3 reactor NIT influent, 2 side spike line, and 1 carb influent to reactor), meters, and sampling equipment, cleaning of the existing reactor tanks, structural rehabilitation of the tanks (repair to concrete surfaces above the normal water line), replacing the existing surface aerators with larger mechanical aerators in stages 2-4 (3 reactors), replacing existing instrumentation and electrical systems upgrades. The aerator in the first mixing zone will be replaced with a submerged mixer; Additional improvements include replacing the dewatering main drain sluice gate and actuator, upgrade butterfly valves to electric butterfly valves, removal of alum pipe on reactor deck, replacing influent and effluent stop logs and actuators, replacing instrumentation including rate controllers, gas monitoring, air meters, step-feed meters, high water alarm, replacing MLSS sample pumps, and painting process air piping and spike line in influent channel. The improvements may include bypass systems to maintain plant operation during construction.

- ***Building No. 12 – Final Sedimentation Tanks No.1 -12 Improvements***
  Improvements include the replacement of process air piping in tanks No. 1 - 6, baffle walls in tanks No. 1 - 6, (48) influent sluice gates and actuators; influent stop log grooves, stems for the (2) manual sluice gates used for the scum manhole, (12) scum sludge gates and actuators, (4) sluice gates in influent channel used to drain the channel, removal of scum tilting weirs. Additional improvements include concrete and handrail repairs.

- ***Building No. 15 and No. 14 – Filter Building No. 1 and Denitrification Filters No. 1 – 20 Improvements***
  Improvements include the replacement of control butterfly valves with pneumatic actuators, (20) backwash drain valves, (40) backwash water valves, (20) influent valves, (40) effluent valves, (20) influent gate actuators, (3) backwash pumps, (2) effluent water pumps, and (3) sump pumps, (2) blowers, (2) sampler stations, piping, supply and exhaust fans, 5-ton hoist, (2) flow meters, motor control centers (MCCs) 57 and 58-A., level control system and control console. Additional improvements include concrete and expansion joint repairs, backwash piping painting on outside over filters, replacement of control room ceiling, doors and windows, and removal polymer equipment from the pump room which is no longer in use.

- ***Building No. 16 - Post Aeration Chlorination Improvements***
  Improvements include relocating the post aeration system from the head of the chlorine contact tanks to the effluent channel, replacing post aeration tank gearboxes, post aeration spent cooling water mag meter and pipe, sample pumps, meters, temperature indicator, process air piping and a post aeration tank dewatering pump.

- ***Building No. 18 – Outfall Structure Improvements***
  Improvements include the replacement of the existing (4) manual sluice gates with motor-operated gates tied to SCADA to allow operation based on either level or flow, replacement of sample pump, and existing 5 kVA transformer. Additional improvements include concrete repairs.

- ***Building No. 20 - Primary Sludge Pump Station No. 1 Improvements***
  Improvements include the replacement of (2) dry-pit pumps, valves, (1) scum gate and actuator, (1) dewatering gate and actuator, miscellaneous piping, windows, doors and instrumentation upgrades.

- ***Building No. 21 – Digester No. 1-4 Rehabilitation***
  Improvements include digester tank cleaning of digesters 1, 2, 3, and 4, recoating tank interiors and exteriors, replacement of flame trap assemblies, replacement of gas holder covers and associated piping for digesters 1, 2, and 4, installation of sludge mixing systems, pressure relief valves, cover level transmitters, and the addition of gas flow meters. Additional improvements include the conversion of Digester No. 1 and 2 to acid-gas phase digestion.

- ***Building No. 21 - Digester No. 5 Rehabilitation***
  Improvements include digester tank cleaning; recoat tank interior and exterior; replace existing floating cover with gas holder cover and associated piping, sludge mixing system; flame trap assembly, pressure relief valves, cover level transmitter; and the addition of a gas flow meter.

- ***Building No. 25 – Diffused Air Reactors (DARs) Upgrades***
  Improvements provide for the rehabilitation of reactors diffused air reactors No.2 - 4; project includes cleaning of the reactors, demolition of existing equipment, replacement of fine bubble diffused aeration, anoxic mixers, internal mixed liquor recycle pumps, (16) influent and effluent gate actuators, installation of pads and pedestals for new equipment and pipe; installation of magnetic flow meters on internal recycle conduits, process piping; and instrumentation and controls including oxygen meters. Additional improvements include concrete and handrail repairs and the installation of a flow meter and related controls on the internal recycle for reactor No. 1.

- ***Building No. 28 - Digester Control Building A Improvements***
  Improvements include the restoration of the building and replacement of the process equipment. The process equipment will include replacement of sludge flow mag meter, gas condensate tanks, digested sludge pumps No. 1 and 2, gas condensate collectors, (6) sludge gas mixing compressors, recirculation pumps, acid-phase transfer pumps & grinders; sludge, gas,

secondary water and fuel piping and valves, and other piping. Additional improvements include the replacement of MCC-62B and other electrical components.

- ***Building No. 29 - Digester Control Building B Improvements***
  Improvements include the restoration of the building and replacement of the process equipment and electrical components. The process equipment will include air compressor; sludge, gas, water and fuel piping and valves.

- ***Building No. 30 – Sludge Treatment Building Miscellaneous Repairs***
  Improvements include the replacement of the existing polymer feed system with a new polymer feed system consisting of bulk storage tanks, liquid polymer activation systems, aging tanks, and activated polymer feed pumps dedicated to each gravity thickener. Additional improvements include the removal of existing dewatering pumps, which are no longer in use.

- ***Building No. 33 and No. 79 - Waste Gas Burners for Digester Tanks No. 1 - No. 7 Rehabilitation***
  Improvements include the replacement of pressure relief and flame trap assemblies, drip trap manual operation, flame check, waste gas burner and ignition systems, plug valves and pipe with stainless steel pipes.

- ***Building No. 36 and 37 - Junction Chamber No. 1 Odor Control Replacement***
  Improvements include the installation of a hybrid system utilizing biotrickling filters followed by chemical scrubbers for polishing. The system will be capable of treating up to 15,000 cfm of foul air at a peak H2S level of 1,600ppm with a removal efficiency of 99.9%. The system will consist of parallel biological towers, one multi-stage chemical scrubber, recirculation pumps for each tower, chemical storage tanks, chemical containment, chemical feed pumps, wash water connection, blowdown pump station, ductwork, and other associated equipment. Additional improvements include the demolition of the existing odor control system and concrete repairs in the areas adjacent to the system.

- ***Building No. 44 – Main Switch Gear Facility Rehabilitation***
  Improvements include the replacement of the treatment plant main switchgear and rehabilitation of the existing building.

- ***Building No. 47 – Filter Building No. 2 Improvements***
  Improvements include the replacement of (3) backwash pumps, (3) blowers; influent channel gate, piping, replacement of motor control centers (MCC), MCC-85 and MCC-86. Additional improvements include concrete repairs, roof repairs, and skylight replacement.

- ***Building No. 48 – Denitrification Filters No. 21 - 26 and No. 31 - 36 Improvements***
  Improvements include the replacement of (12) backwash water valves, (12) effluent valves, (12) backwash drain valves, (12) influent valves, (2) backwash flow regulating valves, (12) influent gate actuators, (2) filter drain pumps, (2) sump pumps, and (3) backwash pumps. Additional improvements include concrete repairs, pipe and dressers painting.

- ***Building No. 50 – Junction Chamber No. 5 Improvements***
  Improvements include the installation of a flow meter to be able to maintain a constant primary effluent feed rate to the Nitrification Pump Station, replacement of mag meter, (2) spike line valves, and (5) actuators. Additional improvements include concrete repairs, exhaust fan replacement.

- ***Building No. 54 – Dried Sludge Control Building Improvements***
  Improvements include the replacement of bed polymer storage tanks and piping, water line and blended polymer piping, pipes that feed sludge in the sludge storage tanks, sump pump, and motor control centers (MCC) MCC-501, MCC-501A and MCC-501B.

- ***Building No. 55 – Sludge Drying Bed Rehabilitation***
  Improvements include the rehabilitation of 30 sludge drying beds; four (4) sludge drying beds per year. The filter media within several of the drying beds is clogged reducing efficiency of the sludge dewatering process.

- ***Building No. 57 – Nitrification Pump Station Improvements***
  Improvements include the replacement of the seven (7) submersible pumps valves and piping at the Nitrification pumping station. Design will include improvements to pump layout to prevent premature failures. Additional improvements include upgrading the instrumentation and electrical systems.

- ***Building No. 58 - Diffused Air Reactors (DARs) Blowers Replacement***
  Improvements include the replacement of existing constant speed blowers with adjustable speed blowers to match air demands associated with DARs improvements. These improvements will need to be coordinated with the replacement of the air diffusers. Additional improvements include the replacement of transformers T-8A and T-8B.

- ***Building No. 59 – Screen & Grit Building No. 1 Improvements***
  Improvements include the replacement of washer compactors, (8) grit pumps, piping and tubing for all four grit tanks and pumps, grit tank rakes and drivers, collectors, reconditioning and painting of support beams, replacement of baffles and guides, influent and effluent gate actuators, drain gate and intermediate gate including actuators in the influent channel, sump

pumps and piping, organic return flow pipe, air piping and valves, down-legs of the air process piping in the effluent channel, roof drain/ vent pipe, effluent water pipe, cranes, lighting features and electrical conduits. Additional improvements include replacement of windows, overhead doors, doors, concrete and pipe penetration repairs, and ventilation improvements.

- ***Building No. 71 – Mixed Sludge Pumping Station Improvements***
  Improvements include the replacement of the sludge transfer pumps, exhaust fan and duct work. Additional improvements include concrete repairs.

- ***Building No. 72 – Digester No. 7 Rehabilitation***
  Improvements include the replacement of existing floating cover with gas holder cover, replacement of existing gas piping with stainless steel; gas mixing components, sludge mixing system, digested sludge pumps, recirculation pumps, water heater feed pumps and addition of a gas flow meter. Additional improvements include repair hole in the tank sidewall, recoat tank interior and exterior and miscellaneous concrete repairs.

- ***Building No. 72 – Digester No. 6 Rehabilitation***
  Improvements include digester tank cleaning, recoat tank interior and exterior, replacement of existing floating cover with gas holder cover, sludge mixing system. Additional improvements include concrete repairs.

- ***Building No. 74 - Digester Control Building C Improvements***
  Improvements include the replacement of the sludge pumps, recirculation pumps, hot water pumps, piping and valves. Additional improvements include concrete and miscellaneous building repairs.

- ***Building No. 80 and No. 81 – Biogas Use Improvements***
  Improvements provide for the replacement of the existing cogeneration equipment to provide combined heat and power for the operation of the plant. The improvements include new biogas fueled generators, gas conditioning system, heat recovery equipment; all electrical, control systems, instrumentation, safety systems, and all other appurtenances needed to provide a complete project. If possible, the existing buildings will be utilized to house the new equipment. These improvements will need to be coordinated with digester heating system improvements.

- ***Building No. 80 - 75 KVA Dry Transformer T Replacement***
  Improvements include the replacement of the 75 KVA Dry Transformer T.

- ***Building No. 83 - Primary Sludge Pump Station No. 2 Improvements***
  Improvements include the replacement of (2) pumps, (3) sluice gates and actuators, MCC-48, MCC-49 and instrumentation upgrades. Additional improvements include concrete repairs.

- ***Building No. 85 – Switchgear No. 60 Generator Monitoring Panel Replacement***
  Improvements include the replacement of Switchgear No. 60 Generator Monitoring Panel.

- ***Plant Wide - Effluent Water System Improvements***
  Improvements include the replacement of deteriorated effluent water system piping and construction of a new effluent water pipe loop to improve effluent water system at the plant. New system will include additional capacity for a new odor control unit at Junction Chamber No. 1 and will improve the pressure at the Screen and Grit Buildings.

- ***Plant Wide - Medium Voltage Cables Upgrade***
  Improvements include partial discharge testing and the replacement of medium voltage cables throughout the plant.

- ***Plant Wide - AWT SCADA - Master Plan, Design and Construction***
  Improvements include the evaluation of the current system and development of a master plan to improve the AWT SCADA system. AWT SCADA improvements will be designed and constructed as identified in the SCADA Master Plan. Improvements may include a new Process Control (Base 7) room.

- ***Plant Wide - Treatment Plant Security and Emergency Responses Improvements***
  Improvements include the improvement of the treatment plant's security and emergency response systems. This project will include new access/entry gate systems and perimeter fencing.

- ***Plant Wide - Fire Alarm System Upgrades***
  Improvements include the replacement of fire alarm system and fire alarm piping.

3.2 Listed below are additional improvements at the HFC AWTP that may be added to the project due to changes in priorities. :

- ***New Facility- Sludge Dewatering Facility Replacement***
  Improvements include a new building, polymer activation system, centrifuge technology, and all associated piping, sludge handling, pumping, and electrical equipment. Additional improvements include the demolition of existing Sludge Dewatering Building.

- ***New Facility- Side Stream Treatment***
  The master plan recommended that a deammonification system should be considered to reduce nitrogen loading from plant returned flows (side stream). A study to further determine the

benefits and design requirements for this system is required. This study may include the construction of a pilot plant to test potential systems

- ***Building No. 2 - Junction Chamber No. 1 Aeration Improvements***
  Improvements include the replacement of the existing diffused air system which is reaching the end of its remaining useful life, (4) PD blowers ((2) 3600 cfm and (2) 4320 cfm) along with exposed air piping. Electrical upgrades includes the replacement of (3) Motor Control Centers.

- ***Building No. 22, 23 and 24 - Return Sludge Pumping Stations No. 1, No. 2 and No. 3 Rehabilitation***
  Improvements include the replacement of piping, (12 per RSPS) valves and actuators, supply fans, (3) 2-ton Hoist, sump pumps, (5 per RSPS) sludge pumps, sluice gates, (2) 24" return sludge meters, (2) 10" waste sludge flowmeters. Electrical upgrades include the replacement of SWGR-40, and MCC-43 and 45, (5 per RSPS) VFD's, lighting panels and miscellaneous electrical components. Additional improvements include roof and concrete repairs.

- ***Building No. 61 - Final Sedimentation Tanks Improvements No. 13 - 20 Improvements***
  Improvements include the replacement of the chains and drive systems, (68) sluice gates and actuators, rate controller equipment in the secondary effluent control channel including the secondary control weir, and motor operated gear boxes. Instrumentation upgrades include automatic sludge blanket monitors, return sludge and waste sludge flow indicating transmitters, pump speed indication, and return sludge solids concentration monitors. Design should evaluate options to automate return sludge pumping including SCADA integration with other systems and monitoring equipment. Additional improvements include concrete repairs and application of coatings to prevent corrosion.

- ***Building No. 78 – Standby Power System Improvements***
  Improvements include the installation of one 2MW (Tier 4) generator in a separate walk-in enclosure that is hurricane rated and the installation of additional fuel storage tanks (68,000 gals total) to bring the total fuel storage capacity of the standby system to 5 days.

- ***Plant Wide - Roof Repairs***
  Improvements include miscellaneous roof repairs throughout the plant.

- ***Plant Wide - Painting Repairs***
  Improvements include miscellaneous painting throughout the plant.

- ***Plant Wide - Concrete Repairs***
  Improvements include miscellaneous concrete repairs throughout the plant.

- ***Plant Wide – Sidewalk Construction***
  Improvements include the construction of sidewalks throughout the plant site to improve access between buildings

- ***Plant Wide - Miscellaneous Plant Equipment Repairs***
  Improvements include miscellaneous plant equipment repairs throughout the plant, including the rehabilitation/replacement of the existing standby generators, blowers, exhaust, and supply fans.

4 Project Sequence

Listed below is the preliminary sequence for the completion of the improvements included in the project. The Firm will initially be assigned improvements based on this completion sequence; however, this sequence may be modified based changes in priorities, available funding, and construction phasing that the Firm may identify to reduce construction cost and to maintain plant operations.

Year 1		
Bldg No.	**Improvement**	**Task**
New Facility	Digester Heating System Replacement	Basis of Design Report
5	Screen & Grit Building No. 2 Improvements	Basis of Design Report
5	Screen & Grit Building No. 2 Improved Ventilation	Basis of Design Report
10	Main Pump Station Rehabilitation	Basis of Design Report
10	Main Pump Station Discharge Channel Rehabilitation	Basis of Design Report
11	High Purity Oxygen (HPO) Reactor Improvements	Basis of Design Report
21	Digester No. 1-3 Rehabilitation	Basis of Design Report
21	Digester No. 5 Rehabilitation	Basis of Design Report
28	Digester Control Building A Improvements	Basis of Design Report
29	Digester Control Building B Improvements	Basis of Design Report
47	Filter Building No. 2 Improvements	Basis of Design Report
48	Denitrification Filters No. 21 - 26 and No. 31 - 36 Improvements	Basis of Design Report
58	Diffused Air Reactors (DARs) Blowers Replacement	Basis of Design Report
72	Digester No. 6 Rehabilitation	Basis of Design Report
72	Digester No. 7 Rehabilitation	Basis of Design Report
74	Digester Control Building C Improvements	Basis of Design Report
80 and 81	Biogas Use Improvements and Digester Gas Compressor and Drying System	Basis of Design Report
Plant Wide	Effluent Water System Improvements	Basis of Design Report
2	Junction Chamber No. 1 Improvements	Design/GMP
12	Final Sedimentation Tanks No.1 -12 Improvements – Phase III	Design/GMP
14 and 15	Filter Building No. 1 and Denitrification Filters No. 1 – 20 Improvements	Design/GMP
18	Outfall Structure Improvements	Design/GMP
21	Digester No. 4 Rehabilitation	Design/GMP
25	Diffused Air Reactors (DARs) Upgrades and Train 1 Flow Meter	Design/GMP
33 and 79	Waste Gas Burners for Digester Tanks No. 1 - No. 7 Rehabilitation	Design/GMP
36 and 37	Junction Chamber No. 1 Odor Control Replacement	Design/GMP
54	Dried Sludge Control Building Improvements	Design/GMP
55	Sludge Drying Bed Rehabilitations	Design/GMP
71	Mixed Sludge Pumping Station Improvements	Design/GMP

Year 2		
Bldg No.	**Improvement**	**Task**
New Facility	New Primary Sedimentation Tanks No. 9 – 12	Basis of Design Report
New Facility	Automated Septage Receiving Facility	Basis of Design Report
New Facility	Additional Final Sedimentation Tanks No. 21 - 24 and Return Sludge Pumping Station No. 6	Basis of Design Report
4, 39, 40, 51 and 52	Treatment Plant Office and Building Improvements	Basis of Design Report
57	Nitrification Pump Station Improvements	Basis of Design Report
59	Screen & Grit Building No. 1 Improvements	Basis of Design Report
Plant Wide	AWTP SCADA Improvements	Basis of Design Report
Plant Wide	Treatment Plant Security and Emergency Responses Improvements	Basis of Design Report
Plant Wide	Medium Voltage Cables Upgrade	Basis of Design Report
New Facility	Digester Heating System Replacement	Design/GMP
5	Screen & Grit Building No. 2 Improvements	Design/GMP
5	Screen & Grit Building No. 2 Improved Ventilation	Design/GMP
10	Main Pump Station Rehabilitation	Design/GMP
10	Main Pump Station Discharge Channel Rehabilitation	Design/GMP
11	High Purity Oxygen (HPO) Reactor Improvements	Design/GMP
28	Digester Control Building A Improvements	Design/GMP
47	Filter Building No. 2 Improvements	Design/GMP
48	Denitrification Filters No. 21 - 26 and No. 31 - 36 Improvements	Design/GMP
72	Digester No. 7 Rehabilitation	Design/GMP
80 and 81	Biogas Use Improvements and Digester Gas Compressor and Drying System	Design/GMP
85	Switchgear No. 60 Generator Monitoring Panel Replacement	Design/GMP
Plant Wide	Effluent Water System Improvements	Design/GMP
2	Junction Chamber No. 1 Improvements	Begin Construction
12	Final Sedimentation Tanks No.1 -12 Improvements – Phase III	Begin Construction
14 and 15	Filter Building No. 1 and Denitrification Filters No. 1 – 20 Improvements	Begin Construction
18	Outfall Structure Improvements	Begin Construction
21	Digester No. 4 Rehabilitation	Begin Construction
25	Diffused Air Reactors (DARs) Upgrades and Train 1 Flow Meter	Begin Construction
33 and 79	Waste Gas Burners for Digester Tanks No. 1 - No. 7 Rehabilitation	Begin Construction
36 and 37	Junction Chamber No. 1 Odor Control Replacement	Begin Construction
54	Dried Sludge Control Building Improvements	Begin Construction
55	Sludge Drying Bed Rehabilitations, Phase II	Begin Construction
71	Mixed Sludge Pumping Station Improvements	Begin Construction
80	75 KVA Dry Transformer T Replacement	Design and Begin Construction

Year 3		
Bldg No.	**Improvement**	**Task**
Plant Wide	Fire Alarm System Upgrades	Basis of Design Report
New Facility	New Primary Sedimentation Tanks No. 9 – 12	Design/GMP
New Facility	Automated Septage Receiving Facility	Design/GMP
New Facility	Additional Final Sedimentation Tanks No. 21 - 24 and Return Sludge Pumping Station No. 6	Design/GMP
4, 39, 40, 51 and 52	Treatment Plant Office and Building Improvements	Design/GMP
8	Junction Chamber No. 3 Miscellaneous Repairs	Design/GMP
9	Primary Sedimentation Tanks No. 1 - 4 Improvements	Design/GMP
16	Post Aeration Chlorination Improvements	Design/GMP
21	Digester No. 1-3 Rehabilitation	Design/GMP
50	Junction Chamber No. 5 Improvements	Design/GMP
57	Nitrification Pump Station Improvements	Design/GMP
59	Screen & Grit Building No. 1 Improvements	Design/GMP
Plant Wide	AWTP SCADA Improvements	Design/GMP
Plant Wide	Treatment Plant Security and Emergency Responses Improvements	Design/GMP
Plant Wide	Medium Voltage Cables Upgrade	Design/GMP
New Facility	Digester Heating System Replacement	Begin Construction
5	Screen & Grit Building No. 2 Improvements	Begin Construction
5	Screen & Grit Building No. 2 Improved Ventilation	Begin Construction
10	Main Pump Station Rehabilitation	Begin Construction
10	Main Pump Station Discharge Channel Rehabilitation	Begin Construction
11	High Purity Oxygen (HPO) Reactor Improvements	Begin Construction
28	Digester Control Building A Improvements	Begin Construction
47	Filter Building No. 2 Improvements	Begin Construction
48	Denitrification Filters No. 21 - 26 and No. 31 - 36 Improvements	Begin Construction
55	Sludge Drying Bed Rehabilitations, Phase III	Begin Construction
72	Digester No. 7 Rehabilitation	Begin Construction
80 and 81	Biogas Use Improvements and Digester Gas Compressor and Drying System	Begin Construction
85	Switchgear No. 60 Generator Monitoring Panel Replacement	Begin Construction
Plant Wide	Effluent Water System Improvements	Begin Construction

Year 4		
Bldg No.	**Improvement**	**Task**
20	Primary Sludge Pump Station No. 1 Improvements	Design/GMP
21	Digester No. 5 Rehabilitation	Design/GMP
29	Digester Control Building B Improvements	Design/GMP
30	Sludge Treatment Building Miscellaneous Repairs	Design/GMP
44	Main Switch Gear Facility Rehabilitation	Design/GMP
58	Diffused Air Reactors (DARs) Blowers Replacement	Design/GMP
83	Primary Sludge Pump Station No. 2 Improvements	Design/GMP
Plant Wide	Fire Alarm System Upgrades	Design/GMP
New Facility	Additional Final Sedimentation Tanks No. 21 - 24 and Return Sludge Pumping Station No. 6	Begin Construction
New Facility	New Primary Sedimentation Tanks No. 9 – 12	Begin Construction
New Facility	Automated Septage Receiving Facility	Begin Construction
4, 39, 40, 51 and 52	Treatment Plant Office and Building Improvements	Begin Construction
8	Junction Chamber No. 3 Miscellaneous Repairs	Begin Construction
9	Primary Sedimentation Tanks No. 1 - 4 Improvements	Begin Construction
16	Post Aeration Chlorination Improvements	Begin Construction
21	Digester No. 1-3 Rehabilitation	Begin Construction
50	Junction Chamber No. 5 Improvements	Begin Construction
55	Sludge Drying Bed Rehabilitations, Phase IV	Begin Construction
57	Nitrification Pump Station Improvements	Begin Construction
59	Screen & Grit Building No. 1 Improvements	Begin Construction
Plant Wide	Medium Voltage Cables Upgrade	Begin Construction
Plant Wide	Treatment Plant Security and Emergency Responses Improvements	Begin Construction

Year 5		
Bldg No.	**Improvement**	**Task**
72	Digester No. 6 Rehabilitation	Design/GMP
74	Digester Control Building C Improvements	Design/GMP
20	Primary Sludge Pump Station No. 1 Improvements	Begin Construction
21	Digester No. 5 Rehabilitation	Begin Construction
29	Digester Control Building B Improvements	Begin Construction
30	Sludge Treatment Building Miscellaneous Repairs	Begin Construction
44	Main Switch Gear Facility Rehabilitation	Begin Construction
55	Sludge Drying Bed Rehabilitations, Phase V	Begin Construction
58	Diffused Air Reactors (DARs) Blowers Replacement	Begin Construction
83	Primary Sludge Pump Station No. 2 Improvements	Begin Construction
Plant Wide	AWTP SCADA Improvements	Begin Construction
Plant Wide	Fire Alarm System Upgrades	Begin Construction

Year 6		
Bldg No.	**Improvement**	**Task**
55	Sludge Drying Bed Rehabilitations, Phase VI	Begin Construction
72	Digester No. 6 Rehabilitation	Begin Construction
74	Digester Control Building C Improvements	Begin Construction

5 Project Scope Requirements

The Firm shall complete the following for each assigned improvement:

5.1 Evaluation

- The Firm will determine the requirements for the improvement and will identify and evaluate potential design alternatives.
- City will provide all available HFC AWTP as-built drawings and available data as needed to determine and evaluate alternatives, provide recommendations, and develop scopes of work.

Requirements for the improvements and the findings from the evaluation of alternatives shall be presented in a Basis of Design Report (BODR). The BODR shall include the evaluation of design alternatives, recommendations, preliminary equipment selections and layout, required construction sequencing, and preliminary construction estimates. The City will evaluate the alternatives and recommendations and will make a final selection of the requirements that will be used for the final design.

5.2 Design

The Firm shall prepare and submit detailed construction plans and specifications at 60%, 90% and 100% phases. The improvements shall be designed and construction sequences shall be developed to minimize impacts to plant operations during construction and to maintain 24 hour operations of the treatment facility. The Firm will provide a GMP estimate at each 90% construction plan phase that will be used to determining small and minority business subcontracting opportunities.

All drawings shall be produced in 3D (i.e. AutoCAD Civil 3D or Rivet as compatible for rendering) and shall be accurately georeferenced. Drawings shall meet the current Wastewater Department Drafting Standards.

5.3 Permitting

The Firm will be responsible for all required environmental testing and permitting needed to complete the project. The scope of these requirements will be determined by the Design-build team based on the selected improvements and construction requirements.

5.4 Construction Management and Oversight

The Firm will be responsible for construction management activities and oversight of each improvement with consistent coordination with the City during the design and construction portions. The contractors utilized shall have the suitable personnel and equipment, resources, financial stability and experience to accomplish the Project requirements and objectives. The design-build team will be responsible for coordinating construction activities with plant operations and other projects to ensure continuous 24-hour operation of the plant is maintained.

5.5 Start-up/Testing/Training

The Firm shall provide start-up services for the completed improvements. The design-build team shall also conduct all performance testing needed for final acceptance of each improvement.

Operation and maintenance manuals specific to the installed equipment shall be developed and provided to the Wastewater Department. The specific format of the O&M manuals will be defined during the design phase of the project. Specific equipment information will also need to be compiled through the City's Asset Tracking form and conveyed to the City so that the equipment's asset data can entered in the City's Maintenance Management System.

The Firm shall provide all training to the HFC AWTP staff on the proper operation and maintenance of the installed equipment. The specific training requirements and equipment requiring training will be provided during the final design phase of each improvement.

The Firm shall provide AutoCAD and PDF as-built drawings that accurately depict the as-built conditions of the completed improvement.

Failure to Complete, Sign and Submit Both Forms 10 & 20 SHALL render the Bid or Proposal Non-Responsive

Page 1 of 4 – DMI Solicited/Utilized Schedules
City of Tampa – Schedule of All Solicited Sub-(Contractors/Consultants/Suppliers)
(FORM MBD-10)

Contract No.:_____ Contract Name:_____
Company Name:_____ Address:_____
Federal ID:_____ Phone:_____ Fax:_____ Email:_____

Check applicable box(es). Detailed Instructions for completing this form are on page 2 of 4.
[ ] No Firms were contacted or solicited for this contract.
[ ] No Firms were contacted because:_____
[ ] See attached list of additional Firms solicited and all supplemental information (List must comply to this form)
Note: Form MBD-10 must list ALL subcontractors solicited including Non-minority/small businesses

NIGP Code Categories: Buildings = 909, General = 912, Heavy = 913, Trades = 914, Architects = 906, Engineers & Surveyors = 925, Supplier = 912-77

S = SLBE W=WMBE O = Neither Federal ID	Company Name Address Phone, Fax, Email	Type of Ownership (F=Female M=Male) BF BM = African Am. HF HM = Hispanic AF AM = Asian Am. NF NM = Native Am. CF CM = Caucasian	Trade or Services NIGP Code (listed above)	Contact Method L=Letter F=Fax E=Email P=Phone	Quote or Response Received Y/N

Failure to Complete, Sign and Submit this form with your Bid or Proposal Shall render the Bid Non-Responsive (Do Not Modify This Form)

It is hereby certified that the information provided is an accurate and true account of contacts and solicitations for sub–contracting opportunities on this contract.

Signed:_____ Name/Title:_____ Date:_____

Failure to Complete, Sign and Submit Both Forms 10 & 20 SHALL render the Bid or Proposal Non-Responsive
Forms must be included with Bid / Proposal

Instructions for completing The Sub-(Contractors/Consultants/ Suppliers) Solicited Form (Form MBD-10)

This form must be submitted with all bids or proposals. **All** subcontractors (regardless of ownership or size) solicited and subcontractors from whom unsolicited quotations were received must be included on this form. The instructions that follow correspond to the headings on the form required to be completed. Note: Ability or desire to self-perform all work shall not exempt the prime from Good Faith Efforts to achieve participation.

- **Contract No.** This is the number assigned by the City of Tampa for the bid or proposal.
- **Contract Name.** This is the name of the contract assigned by the City of Tampa for the bid or proposal.
- **Contractor Name.** The name of your business and/or doing business as (dba) if applicable.
- **Address.** The physical address of your business.
- **Federal ID.** FIN. A number assigned to your business for tax reporting purposes.
- **Phone.** Telephone number to contact business.
- **Fax.** Fax number for business.
- **Email.** Provide email address for electronic correspondence.
- **No Firms were contacted or solicited for this contract.** Checking the box indicates that a pre-determined Subcontract Goal or Participation Plan Requirement was not set by the City resulting in your business not using subcontractors and will self-perform all work. If during the performance of the contract you employ subcontractors, the City must pre-approve subcontractors. Use of the "Sub-(Contractors/Consultants/Suppliers) Payments" form (MBD Form-30) must be submitted with every pay application and invoice. Note: Certified SLBE or WMBE firms bidding as Primes are not exempt from outreach and solicitation of subcontractors.
- **No Firms were contacted because.** Provide brief explanation why no firms were contacted or solicited.
- **See attached documents.** Check box, if after you have completed the DMI Form in its entirety, you need more space to list additional firms and/or if you have supplemental information/documentation relating to the form. All DMI data not submitted on the MBD Form-10 must be in the same format and have all requested data from MBD Form-10 included.

The following instructions are for information of any and all subcontractors solicited.

- **"S" = SLBE, "W" = WMBE.** Enter "**S**" for firms Certified by the City as Small Local Business Enterprises and/or "**W**" for firms Certified by the City as either Women/Minority Business Enterprise; **"O" = Non-certified others**.
- **Federal ID.** FIN. A number assigned to a business for tax reporting purposes. This information is critical in proper identification and payment of the contractor/subcontractor.
- **Company Name, Address, Phone & Fax**. Provide company information for verification of payments.
- **Type of Ownership.** Indicate the Ethnicity and Gender of the owner of the subcontracting business.
- **Trade, Services, or Materials** indicate the trade, service, or materials provided by the subcontractor. NIGP codes aka "National Institute of Governmental Purchasing" are listed at top section of document.
- **Contact Method L=letter, F=fax, E=Email, P=Phone.** Indicate with letter the method(s) of soliciting for bid.
- **Quote or Resp. (response) Rec'd (received) Y/N**. Indicate "Y" Yes if you received a quotation or if you received a response to your solicitation. Indicate "N" No if you received no response to your solicitation from the subcontractor. Must keep records: log, ledger, documentation, etc. that can validate/verify.

If additional information is required or you have questions, please contact the Equal Business Opportunity Program - Minority and Small Business Development Office at (813) 274-5522.

Failure to Complete, Sign and Submit Both Forms 10 & 20 SHALL render the Bid or Proposal Non-Responsive

City of Tampa – Schedule of All To-Be-Utilized Sub-(Contractors/Consultants/Suppliers)

(FORM MBD-20)

Contract No.:_____ Contract Name:_____
Company Name:_____Address:_____
Federal ID:_____ Phone:_____ Fax:_____ Email:_____

Check applicable box(es). Detailed Instructions for completing this form are on page 4 of 4.

[ ] See attached list of additional Firms Utilized and all supplemental information (List must comply to this form)
Note: Form MBD-20 must list ALL subcontractors To-Be-Utilized including Non-minority/small businesses

[ ] No Subcontracting/consulting (of any kind) will be performed on this contract.

[ ] No Firms are listed to be utilized because:_____

NIGP Code General Categories: Buildings = 909, General = 912, Heavy = 913, Trades = 914, Architects = 906, Engineers & Surveyors = 925, Supplier = 912-77

Enter "S" for firms Certified as Small Local Business Enterprises, "W" for firms Certified as Women/Minority Business Enterprise, "O" for Other Non-Certified

S = SLBE W=WMBE O =Neither Federal ID	Company Name Address Phone, Fax, Email	Type of Ownership (F=Female M=Male) BF BM = African Am. HF HM = Hispanic Am. AF AM = Asian Am. NF NM = Native Am. CF CM = Caucasian	Trade, Services, or Materials NIGP Code Listed above	$ Amount of Quote. Letter of Intent (LOI) if available	Percent of Scope or Contract %

Failure to Complete, Sign and Submit this form with your Bid or Proposal Shall render the Bid Non-Responsive. (Do Not Modify This Form)

Total ALL Subcontract / Supplier Utilization $_____
Total SLBE Utilization $ _____
Total WMBE Utilization $ _____
Percent SLBE Utilization of Total Bid/Proposal Amt. _____% Percent WMBE Utilization of Total Bid/Proposal Amt. _____%

It is hereby certified that the following information is a true and accurate account of utilization for sub-contracting opportunities on this Contract.

Signed:_____ Name/Title:_____ Date:_____

Failure to Complete, Sign and Submit Both Forms 10 & 20 SHALL render the Bid or Proposal Non-Responsive
Forms must be included with Bid / Proposal

Instructions for completing The Sub-(Contractors/Consultants/ Suppliers) to be Utilized Form

(Form MBD-20)

This form must be submitted with all bids or proposals. All subcontractors (regardless of ownership or size) projected to be utilized must be included on this form. Note: Ability or desire to self-perform all work shall not exempt the prime from Good Faith Efforts to achieve participation.

Contract No. This is the number assigned by the City of Tampa for the bid or proposal.

- **Contract Name.** This is the name of the contract assigned by the City of Tampa for the bid or proposal.
- **Contractor Name.** The name of your business and/or doing business as (dba) if applicable.
- **Address.** The physical address of your business.
- **Federal ID.** FIN. A number assigned to your business for tax reporting purposes.
- **Phone.** Telephone number to contact business.
- **Fax.** Fax number for business.
- **Email.** Provide email address for electronic correspondence.
- **No Subcontracting/consulting (of any kind) will be performed on this contract.** Checking box indicates your business will not use subcontractors when no Subcontract Goal or Participation Plan Requirement was set by the City, but will self-perform all work. When subcontractors are utilized during the performance of the contract, the "Sub-(Contractors/Consultants/Suppliers) Payments" form (MBD Form-30) must be submitted with every pay application and invoice. Note: certified SLBE or WMBE firms bidding as Primes are not exempt from outreach and solicitation of subcontractors, including completion and submitting Form-10 and Form-20.
- **No Firms listed To-Be-Utilized.** Check box; provide brief explanation why no firms were retained when a goal or participation plan requirement was set on the contract. Note: mandatory compliance with Good Faith Effort outreach (GFECP) requirements applies (MBD Form-50) and supporting documentation must accompany the bid.
- **See attached documents.** Check box, if after completing the DMI Form in its entirety, you need more space to list additional firms and/or if you have supplemental information/documentation relating to the scope/value/percent utilization of subcontractors. Reproduce copies of MBD-20 and attach. All data not submitted on duplicate forms must be in the same format and content as specified in these instructions.

The following instructions are for information of Any and All subcontractors To Be Utilized.

- **Federal ID.** FIN. A number assigned to a business for tax reporting purposes. This information is critical in proper identification of the subcontractor.
- **"S" = SLBE, "W" = WMBE.** Enter "**S**" for firms Certified by the City as Small Local Business Enterprises and/or "**W**" for firms Certified by the City as Women/Minority Business Enterprise; **"O" = Non-certified others**.
- **Company Name, Address, Phone & Fax**. Provide company information for verification of payments.
- **Type of Ownership.** Indicate the Ethnicity and Gender of the owner of the subcontracting business.
- **Trade, Services, or Materials (NIGP code if Known)** Indicate the trade, service, or material provided by the subcontractor. Abbreviated list of NIGP is available at http:/www.tampagov.net/mbd "Information Resources".
- **Amount of Quote, Letters of Intent** (required for both SLBEs and WMBEs).
- **Percent of Work/Contract.** Indicate the percent of the total contract price the subcontract(s) represent. For CCNA only (i.e. Consultant A/E Services) you must indicate subcontracts as percent of total scope/contract.
- **Total Subcontract/Supplier Utilization.** – Provide total dollar amount of all subcontractors/suppliers projected to be used for the contract. (Dollar amounts may be optional in CCNA depending on solicitation format).
- **Total SLBE Utilization.** Provide total dollar amount for all projected SLBE subcontractors/Suppliers used for this contract. (Dollar amounts may be optional in CCNA proposals depending on the solicitation format).
- **Total WMBE Utilization.** Provide total dollar amount for all projected WMBE subcontractors/Suppliers used for this contract. (Dollar amounts may be optional in CCNA proposals depending on the solicitation format).
- **Percent SLBE Utilization.** Total amount allocated to SLBEs divided by the total bid/proposal amount.
- **Percent WMBE Utilization.** Total amount allocated to WMBEs divided by the total bid/proposal amount.

If additional information is required or you have questions, please contact the Equal Business Opportunity Program - Minority and Small Business Development Office at (813) 274-5522.

Procurement Guidelines
To Implement
Minority & Small Business Participation

Underutilized WMBE Primes by Industry Category

FORMAL PROCUREMENT

Construction	Construction-Related	Professional	Non-Professional	Goods
Black	Asian	Black	Black	Black
Hispanic	Native Am.	Hispanic	Asian	Hispanic
Native Am.	Woman	Asian	Native Am.	Asian
Woman		Native Am.		Native Am.
		Woman		Woman

Underutilized WMBE Sub-Contractors / Sub-Consultants

SUB WORK

Construction	Construction-Related	Professional	Non-Professional	Goods
Black	Black	Black	Black	Black
	Asian	Hispanic	Asian	Asian
	Native Am.	Asian	Native Am.	Native Am.
	Woman	Native Am.		Woman
		Woman		

Policy

The Guidelines apply to formal procurements and solicitations. WMBE participation will be narrowly-tailored.

Index

- Black = Black/African-American Business Enterprise
- Hispanic = Hispanic Business Enterprise
- Asian = Asian Business Enterprise
- Native Am. = Native American Business Enterprise
- Woman = Woman Business Enterprise (Caucasian)

Industry Categories

Construction is defined as: new construction, renovation, restoration, maintenance of public improvements and underground utilities.
Construction-Related Services are defined as: architecture, professional engineering, landscape architecture, design build, construction management services, or registered surveying and mapping.
Professional Services are defined as: attorney, accountant, medical doctor, veterinarian, miscellaneous consultant, etc.
Non-Professional Services are defined as: lawn maintenance, painting, janitorial, printing, hauling, security guard, etc.
Goods are defined as: all supplies, materials, pipes, equipment, machinery, appliances, and other commodities.

MBD Form-70