Howard F. Curren

Advanced Wastewater Treatment Plant

OPERATION AND MAINTENANCE MANUAL

◆

VOLUME 1

◆

CITY OF TAMPA

GREELEY AND HANSEN
ENGINEERS

FOREWORD

This manual describes the operation and maintenance requirements for the Howard F. Curren Advanced Wastewater Treatment Plant and is divided into five volumes as follows.

Volume 1:	
Chapter I	Introduction
Chapter II	Process Description
Chapter III (Part 1)	Operation and Control
Volume 2:	
Chapter III (Part 2)	Operation and Control
Chapter IV	Laboratory Control
Chapter V	Records
Chapter VI	Safety
Chapter VII	Utilities
Chapter VIII	Personnel
Volume 3:	
Chapter IX	Emergencies
Chapter X	Maintenance
Volume 4:	
Chapters II & III	Figures (11 x 17)

To facilitate use of the manual, a page, table and figure numbering system has been developed to identify chapter, section and page, table or figure number. Refer to section headed "Numbering System" of Chapter I, Introduction, for details.

A general Table of Contents is provided for each volume.

TABLE OF CONTENTS

CHAPTER/SECTION	DESCRIPTION	PAGE
I	**INTRODUCTION**	
I-IN-FW	FOREWORD	I-IN-1
I-IN-MG	USER GUIDE	I-IN-1
I-IN-NS	NUMBERING SYSTEM	I-IN-3
I-IN-PD	PLANT DESCRIPTION	I-IN-7
II	**PROCESS DESCRIPTION**	
II-PD-GN	GENERAL	II-PD-1
II-PD-PR	PRELIMINARY AND PRIMARY TREATMENT	II-PD-6
II-PD-AT	ADVANCED TREATMENT	II-PD-9
II-PD-ST	SLUDGE TREATMENT FACILITIES	II-PD-16
III	**OPERATION AND CONTROL**	
III-GN	**GENERAL**	III-GN-1
III-PR	**PRIMARY FACILITIES**	
III-PR-JC1	JUNCTION CHAMBER AND METER VAULT NO. 1	III-PR-1
III-PR-PST	PRIMARY SEDIMENTATION TANK NOS. 1-8	III-PR-35
III-PR-MSPS	MIXED SLUDGE PUMPING STATION	III-PR-47
III-PR-ADT	ANAEROBIC DIGESTION TANKS (SLUDGE CONTROL)	III-PR-59
III-PR-JC3	JUNCTION CHAMBER NO. 3	III-PR-87
III-PO	**POWER FACILITIES**	
III-PO-RSPS	RAW SEWAGE PUMPING STATION	III-PO-1
III-PO-PG	POWER GENERATION	III-PO-7
III-PO-SPF	STANDBY POWER FACILITY	III-PO-33
III-SG	**SCREENING AND GRIT REMOVAL**	
III-SG-SGB	SCREEN AND GRIT BUILDINGS NO. 1 AND NO. 2	III-SG-1
III-OB	**OXYGEN BIOLOGICAL SYSTEM**	
III-OB-MPS	MAIN PUMPING STATION	III-OB-1
III-OB-OR	OXYGEN REACTORS	III-OB-47
III-OB-JC2	JUNCTION CHAMBER AND METER VAULT NO. 2	III-OB-91
III-OB-IPS	INTERMEDIATE PUMPING STATION	III-OB-99

CHAPTER/SECTION	DESCRIPTION	PAGE
III-OG	**OXYGEN GENERATION AND STORAGE**	
III-OG-OGN & III-OG-OST	OXYGEN GENERATION AND STORAGE EQUIPMENT	III-OG-1
III-DA	**DIFFUSED AIR BIOLOGICAL SYSTEM**	
III-DA-DAR	DIFFUSED AIR REACTORS	III-DA-1
III-DA-BB	BLOWER BUILDING	III-DA-39
III-DA-NPS	NITRIFICATION PUMPING STATION AND JUNCTION CHAMBER NO. 5	III-DA-57
III-FS	**FINAL SEDIMENTATION TANKS**	
III-FS-FST	FINAL SEDIMENTATION TANK NOS. 1-12 AND 13-20	III-FS-1
III-FS-SPS	SLUDGE PUMPING STATION NOS. 1, 2, 3, 4 AND 5	III-FS-37
III-FS-ABP	ACCESS BUILDING AND PIPE TUNNEL	III-FS-69
III-FL	**FILTRATION**	
III-FL-FB	FILTER BUILDINGS NO. 1 AND NO. 2 AND JUNCTION CHAMBER NO. 6	III-FL-1
III-FL-DF	DENITRIFICATION FILTERS	III-FL-61
III-FL-CHF	CHEMICAL HANDLING FACILITIES	III-FL-95
III-FL-ACT	POST AERATION-CHLORINATION TANKS AND JUNCTION CHAMBER NO. 4	III-FL-109
III-FL-DCL	DECHLORINATION FACILITIES	III-FL-121
III-FL-RWPS	RECLAIMED WATER PUMPING STATION	III-FL-135
III-ST	**SLUDGE THICKENING**	
III-ST-STB	SLUDGE TREATMENT BUILDING AND THICKENING TANKS	III-ST-1
III-ST-BTB	BELT THICKENER BUILDING	III-ST-25
III-ST-FBST	FLOATING BIOLOGICAL SOLIDS THICKENER FACILITY	III-ST-55
III-SD	**SLUDGE DEWATERING**	
III-SD-SCB	CONTROL BUILDING AND SLUDGE STORAGE TANKS	III-SD-1
III-SD-SDR	SLUDGE DRYING BEDS	III-SD-21
III-SD-SDW	SLUDGE DEWATERING FACILITY	III-SD-29
III-SD-HDF	SLUDGE HEAT DRYING FACILITY	III-SD-65
III-SD-FPS	FILTRATE PUMPING STATION AND BACKFLOW STRUCTURE	III-SD-109
III-OS	**OVERFLOW STRUCTURE**	III-OS-1

CHAPTER/SECTION	DESCRIPTION	PAGE
III-AD	**ADMINISTRATION**	
III-AD-OMB	MAINTENANCE BUILDING	III-AD-1
III-AD-AB	ADMINISTRATION BUILDING	III-AD-17
III-ES	**ELECTRICAL SYSTEMS**	
III-ES-SWG	13.2 KV METALCLAD SWITCHGEAR	III-ES-1
III-ES-OST	OUTDOOR SUBSTATION TRANSFORMERS	III-ES-9
III-SU	**SITE UTILITY SYSTEMS**	
III-SU-VAL	VALVES	III-SU-1
III-SU-UPS	UTILITY PIPING SYSTEMS [1]	III-SU-9
IV	**LABORATORY CONTROL**	
IV-LC-IN	INTRODUCTION	IV-LC-1
IV-LC-PM	PROCESS MONITORING	IV-LC-2
IV-LC-AC	ANALYSIS OF PURCHASED CHEMICALS	IV-LC-13
IV-LC-IM	INSTRUMENTATION	IV-LC-16
IV-LC-MS	MISCELLANEOUS	IV-LC-18
V	**RECORDS**	
V-RC	RECORDS	V-RC-1
VI	**SAFETY**	
VI-SF-ET	EMERGENCY TELEPHONE NUMBERS	VI-SF-1
VI-SF-GN	GENERAL	VI-SF-1
VI-SF-OH	OCCUPATIONAL HAZARDS AND RISK REDUCTION	VI-SF-2
VI-SF-SW	SPECIAL HAZARDS	VI-SF-13
VI-SF-SE	SAFETY EQUIPMENT	VI-SF-25
VI-SF-LT	LOCKOUT/TAGOUT POLICY AND PROCEDURE	VI-SF-26
VI-SF-RE	REFERENCES	VI-SF-29
VII	**UTILITIES**	
VII-UT	UTILITIES	VII-UT-1

[1] Includes general purpose effluent water, plant water, city water, plant air, and process air systems.

CHAPTER/SECTION	DESCRIPTION	PAGE
VIII	**PERSONNEL**	
VIII-PE-IN	INTRODUCTION	VIII-PE-1
VIII-PE-JD	JOB DESCRIPTIONS	VIII-PE-8
IX	**EMERGENCIES**	
IX-EM-GN	GENERAL	IX-EM-1
IX-EM-EF	ELECTRICAL POWER FAILURE	IX-EM-12
IX-EM-AS	ALARM SYSTEM AND ALARM RESPONSE	IX-EM-16
IX-EM-MF	MECHANICAL EQUIPMENT FAILURE	IX-EM-21
IX-EM-IW	INDUSTRIAL WASTES	IX-EM-22
IX-EM-ER	EMERGENCY FLOW REROUTING	IX-EM-24
IX-EM-SW	SEVERE WEATHER	IX-EM-25
IX-EM-FR	FIRE	IX-EM-26
IX-EM-PI	PERSONAL INJURIES	IX-EM-27
IX-EM-UF	UTILITY FAILURE	IX-EM-27
IX-EM-EE	EMERGENCY EQUIPMENT INVENTORY	IX-EM-28
IX-EM-PP	PLANT PERSONNEL AND EMERGENCY RESPONSE CENTER	IX-EM-29
IX-EM-CO	COORDINATION OF POLICE/FIRE DEPARTMENTS	IX-EM-31
IX-EM-ET	EMERGENCY TELEPHONE NUMBERS	IX-EM-21
X	**MAINTENANCE**	
X-PR	**PRIMARY FACILITIES**	
X-PR-JC1	JUNCTION CHAMBER AND METER VAULT NO. 1	X-PR-1
X-PR-PST	PRIMARY SEDIMENTATION TANK NOS. 1-8	X-PR-28
X-PR-MSPS	MIXED SLUDGE PUMPING STATION	X-PR-45
X-PR-ADT	ANAEROBIC DIGESTION TANKS (SLUDGE CONTROL)	X-PR-51
X-PR-JC3	JUNCTION CHAMBER NO. 3	X-PR-76
X-PO	**POWER FACILITIES**	
X-PO-RSPS	RAW SEWAGE PUMPING STATION	X-PO-1
X-PO-PG	POWER GENERATION	X-PO-18
X-PO-SPF	STANDBY POWER FACILITY	X-PO-26
X-SG	**SCREENING AND GRIT REMOVAL**	
X-SG-SGB	SCREEN AND GRIT BUILDINGS NO. 1 AND NO. 2	X-SG-1

CHAPTER/SECTION	DESCRIPTION	PAGE
X-OB	**OXYGEN BIOLOGICAL SYSTEM**	
X-OB-MPS	MAIN PUMPING STATION	X-OB-1
X-OB-OR	OXYGEN REACTORS	X-OB-36
X-OB-JC2	JUNCTION CHAMBER AND METER VAULT NO. 2	X-OB-48
X-OB-IPS	INTERMEDIATE PUMPING STATION	X-OB-53
X-DA	**DIFFUSED AIR BIOLOGICAL SYSTEM**	
X-DA-DAR	DIFFUSED AIR REACTORS	X-DA-1
X-DA-BB	BLOWER BUILDING	X-DA-11
X-DA-NPS	NITRIFICATION PUMPING STATION AND JUNCTION CHAMBER NO. 5	X-DA-25
X-FS	**FINAL SEDIMENTATION TANKS**	
X-FS-FST	FINAL SEDIMENTATION TANK NOS. 1-12 AND 13-20	X-FS-1
X-FS-SPS	SLUDGE PUMPING STATION NOS. 1, 2, 3, 4 AND 5	X-FS-7
X-FS-ABP	ACCESS BUILDING AND PIPE TUNNEL	X-FS-22
X-FL	**FILTRATION**	
X-FL-FB	FILTER BUILDINGS NO. 1 AND NO. 2 AND JUNCTION CHAMBER NO. 6	X-FL-1
X-FL-DF	DENITRIFICATION FILTERS	X-FL-65
X-FL-CHF	CHEMICAL HANDLING FACILITIES	X-FL-70
X-FL-ACT	POST AERATION-CHLORINATION TANKS AND JUNCTION CHAMBER NO. 4	X-FL-75
X-FL-DCL	DECHLORINATION FACILITIES	X-FL-82
X-FL-RWPS	RECLAIMED WATER PUMPING STATION	X-FL-91
X-ST	**SLUDGE THICKENING**	
X-ST-STB	SLUDGE TREATMENT BUILDING AND THICKENING TANKS	X-ST-1
X-ST-BTB	BELT THICKENER BUILDING	X-ST-16
X-ST-FBST	FLOATING BIOLOGICAL SOLIDS THICKENER FACILITY	X-ST-29
X-SD	**SLUDGE DEWATERING**	
X-SD-SCB	CONTROL BUILDING AND SLUDGE STORAGE TANKS	X-SD-1
X-SD-SDR	SLUDGE DRYING BEDS	X-SD-13
X-SD-SDB	SLUDGE DEWATERING FACILITY	X-SD-14
X-SD-HDF	SLUDGE HEAT DRYING FACILITY	X-SD-40
X-SD-FPS	FILTRATE PUMPING STATION	X-SD-114
X-OS	**OVERFLOW STRUCTURE**	X-OS-1

CHAPTER/SECTION	DESCRIPTION	PAGE
X-AD	**ADMINISTRATION**	
X-AD-OMB	MAINTENANCE BUILDING	X-AD-1
X-AD-AB	ADMINISTRATION BUILDING	X-AD-16
X-ES	**ELECTRICAL SYSTEMS**	
X-ES-SWG	13.2 KV METALCLAD SWITCHGEAR	X-ES-1
X-ES-OST	OUTDOOR SUBSTATION TRANSFORMERS	X-ES-3

CHAPTER 1

INTRODUCTION

I-IN-FW FOREWORD

The Howard F. Curren Advanced Wastewater Treatment Plant was constructed as part of the City of Tampa's First through Fifth Wastewater Improvement Programs and serves the City of Tampa, the City of Temple Terrace and parts of the Brandon Area in Hillsborough County. This manual provides guidelines for operating and maintaining the treatment plant facilities. This chapter describes how to use this manual and provides an overall plant description.

The plant began operation in the early 1950's as a primary treatment plant with anaerobic digestion. The primary tanks and the digesters are still in operation. In the 1970's the plant was expanded to an annual average capacity of 60 mgd and converted to advanced wastewater treatment. The expanded plant, known then as the Hookers Point Advanced Wastewater Treatment Plant, had the capability of reducing BOD, suspended solids, nitrogen, and phosphorus. In the 1990's the plant was expanded to the present capacity of 96 mgd. Throughout this period, Tampa has maintained a reputation of excellence in wastewater treatment and has consistently met all effluent permit limitations. The facilities described in this manual were constructed under a number of major construction projects and have been modified through the years under many smaller projects. Table I-IN-1 lists each facility and provides information on the contracts that affected the equipment with the facility.

I-IN-MG USER GUIDE

A. GENERAL

The manual consists of four volumes; Volumes 1 through 3 contain the text for the manual and Volume 4 contains the figures which are referred to in the text of the manual. Each volume contains a Table of Contents for the complete manual. Each chapter follows an outline format and deals with a particular aspect of treatment plant operation and maintenance. Reference tables are placed at the end of each section of text.

In addition to this plant Operation and Maintenance manual, plant personnel will from time to time need to reference various O&M manuals prepared by contractors at the end of construction projects. These manuals provide specific information about each piece of equipment which comes from the manufacturer of the equipment. Parts lists, exploded views, general instructions and other pertinent information may be obtained from these contractor O&M manuals. The contractor O&M manuals are located in the Maintenance Building and are arranged by construction contract. Table I-IN-1 provides a list of each facility showing the contract under which it was constructed and the contracts which added to or modified equipment since the original construction.

The following paragraphs summarize pertinent features of the various chapters and offer suggestions for their use.

B. CHAPTER SYNOPSIS

(1) CHAPTER I, INTRODUCTION

The Introduction in Volume 1 summarizes basic information concerning the design of the manual and historical information about the Howard F. Curren Advanced Wastewater Treatment Plant.

(2) CHAPTER II, PROCESS DESCRIPTION

The Process Description chapter in Volume 1 describes the wastewater treatment and sludge handling facilities. The chapter is designed to assist the operator in understanding the entire treatment process, and also provides a discussion of process theory. The Bases of Design is included in this chapter.

(3) CHAPTER III, OPERATION AND CONTROL

The Operation and Control chapter in Volumes 1 and 2 is the largest and provides a description of plant equipment, including protective features. The chapter provides information concerning normal operation of equipment and systems and furnishes instructions for alternate operation, emergency operation (where applicable), start up and shut down procedures, monitors and alarms, and process control. Equipment is discussed as part of the facility in which it is contained. The facilities are grouped within the chapter to coincide with the various work areas within the plant. Facility Equipment Summary Tables are included in Chapter III and contain equipment control numbers, manufacturers' names and addresses, equipment specifications and other pertinent information for each piece of equipment.

(4) CHAPTER IV, LABORATORY CONTROLS

The Laboratory Controls chapter in Volume 3 describes the sampling and testing program, chemicals used at the plant, and analyses performed.

(5) CHAPTER V, RECORDS

The Records chapter in Volume 3 provides samples of operating records, maintenance records, operating cost records, personnel records and emergency condition records.

(6) CHAPTER VI, SAFETY

The Safety chapter in Volume 3 discusses hazards associated with wastewater treatment facilities and suggests precautionary measures for the personal safety of the operator. Because of the importance of this chapter, it is essential that the operator become thoroughly familiar with its contents.

(7) CHAPTER VII, UTILITIES

The Utilities chapter in Volume 3 is intended for reference purposes. The text contains information concerning sewage treatment plant utility services and lists area offices and telephone numbers of the utility companies. Record drawings should be consulted before any ground excavations are made.

(8) CHAPTER VIII, PERSONNEL

The Personnel chapter in Volume 3 provides job descriptions for the operators and personnel assigned to the treatment plant and define their responsibilities.

(9) CHAPTER IX, EMERGENCIES

The Emergency chapter in Volume 3 deals with emergency conditions that may arise at a sewage treatment plant. To help prevent emergencies and/or reduce their adverse effect on the treatment process, plant personnel and surrounding community, suggested emergency procedures must be studied and observed.

(10) CHAPTER X, MAINTENANCE

The Maintenance chapter in Volume 4 details routine and preventive maintenance tasks to be performed and their required frequency. These tasks are charted on Maintenance Task Tables. Equipment operation is discussed in Chapter III.

C. UPDATING THE MANUAL

This O&M Manual needs to be kept updated to be useful. As new facilities are added, equipment is modified, or procedures changed, the O&M Manual should be updated to reflect these changes. The text and figures have been prepared in electronic form to ease the changes to the manual. All treatment plant personnel should advise the Treatment Plant management of any missing or incorrect information within the manual so that changes can be reflected. Periodically, electronic copies of text and figures will be changed to reflect facility modifications. The corrected sections will then be printed and inserted to replace equivalent sections within the paper copies of the O&M Manual in Volumes 1 through 5.

The text and most tables in the manual have been prepared utilizing the "WordPerfect™ , Version 6.0" word processing program. Table II-1 is prepared utilizing "Lotus 1-2-3™, Release 5". The figures in the manual have been prepared utilizing the "Auto CAD™" computer-aided design drafting program. A working knowledge of "WordPerfect™" and "Auto CAD™" is required to make the modifications.

NOTE

Only those persons designated by the plant management are allowed to make changes to the O&M Manual.

Each page of the manual contains the file name and latest date the file was updated in the lower left hand corner. When updating a file, the revision date will automatically change if the file is saved or printed.

When new text, tables or figures are added, the Table of Contents should be checked and revised as required.

I-IN-NS NUMBERING SYSTEM

A. 12 DIGIT CONTROL NUMBER

A control numbering system has been established to aid in the identification of facilities and equipment. This numbering system is included in the SCADA system installed in the Process Control Room of the Main Pumping Station. The system employs four groups of digits to identify individual buildings, structures, and specific pieces of equipment. Digits are arranged as follows:

XXX	XXX	XX	XXX
FACILITY NUMBER	EQUIPMENT I.D. NUMBER	NUMBER OF UNITS	INVENTORY NUMBER

The facility number is represented by the first group of three digits of the numbering code and identifies major and minor structures such as buildings, sedimentation tanks, meter vaults and the like. For example, 010-XXX-XX-XXXX indicates the Main Pumping Station.

The equipment ID number is represented by the second group of three digits and identifies the type of equipment in the facility. For example, 010-015-XX-XXXX identifies a Main Sewage Pump in the Main Pumping Station.

The third group of digits represents the unit number of a particular piece of equipment. For example, 010-015-02-XXXX identifies No. 2 Main Sewage Pump in the Main Pumping Station.

The last group of digits are for equipment spare parts inventory control. This inventory control number is computerized to facilitate maintenance and replacement of spare parts.

NOTES

When reference is made to an item of equipment, as the No. 2 Main Sewage Pump above, the last group of digits will always be all zeros. For example, 010-015-02-0000

When reference is made to a spare part, for example, replacement bearings for a main sewage pump, the third group of numbers is the lowest unit number that this part applies to. For example, 010-015-01-0123 may be used to identify replacement bearings for a main sewage pump in the Main Pumping Station.

B. ALPHA-NUMERIC IDENTIFICATION SYSTEM

The alpha-numeric identification system used in the Contract Plans and Specifications is included in the O&M Manual text and figures. This identification system has been included to aid in readily determining the actual physical location of a specific item of equipment described in the text or shown schematically on the figures. This number takes the form:

LLX	LL	XL
STRUCTURE	EQUIPMENT	NO. OF UNITS

The First group of characters (up to three characters, which may be alphabetical or alpha-numeric) are an acronym for a particular structure. For example, ST stands for Sludge Treatment Building. A numerical character is included as the last one only if necessary to distinguish between structures with the same name. For example, SG1 identifies Screen and Grit Building No. 1.

The Second group of characters (up to three alphabetic characters) are an acronym for an item of equipment within a certain structure. For example, SG1-GP stand for a grit pump, Screen and Grit Building No. 1.

The Third group of characters (up to two characters, which may be numeric or alpha-numeric) identifies the unit number of a particular piece of equipment. As an example for numeric characters, ST-S-1 stands for Supply Fan No. 1, Sludge Treatment Building. An example with a third group of alpha-numeric characters is where multiple equipment units are associated with a numbered structure or facility such as Screen and Grit Building No. 1, provided with eight grit pumps, which are numbered, SG1-GP-5A, 5B, 6A, 6B, 7A, 7B, 8A and 8B.

C. O&M MANUAL PAGE NUMBERING SYSTEM

The O&M Manual is organized into ten chapters. Each chapter is comprised of several major topics. The O&M Manual page numbering system was developed to help the reader to be able to readily identify the chapter and topic of a given page of text. The page number takes the form:

XX (Roman)	LL	XXX (Arabic)
CHAPTER	TOPIC	PAGE

The first group of characters (up to four Roman numerals) identifies the chapter number which the page refers to. For example, III stands for Chapter Three.

The second group of characters (two alphabetic characters) are an acronym for a particular topic which the page refers to. For example, III-PR identifies Primary Facilities, Chapter III.

The third group of characters (up to three numeric characters) identifies the page number. For example, III-PR-13 stands for page 13, Primary Facilities, Chapter Three.

D. O&M MANUAL TOPIC AND SUB-TOPIC NUMBERING SYSTEM

The O&M Manual is organized into ten chapters. Each chapter is comprised of several major topics. In eight of the ten chapters, these major topics are comprised of sub-topics. The O&M Manual topic and sub-topic numbering system was developed to help the reader to be able to readily identify the chapter, the topic and the sub-topic of a given page of text. The topic and sub-topic number takes the form:

XX (Roman)	LL	LLLL
CHAPTER	TOPIC	SUB-TOPIC

The first group of characters (up to four Roman numerals) identifies the chapter number which the topic and sub-topic refer to. For example IX stands for Chapter Nine.

The second group of characters (two alphabetical characters) are an acronym for a particular topic. For example, IX-EM identifies Emergencies, Chapter Nine.

The third group of characters (up to four alphabetical characters) are an acronym for a sub-topic of a particular topic. For example, IX-EM-MF stands for the sub-topic Mechanical Equipment Failure, of the topic Emergencies, Chapter Nine. This third group of characters is omitted in Chapters V and VII where there are no sub-topics.

E. O & M MANUAL TABLE NUMBERING SYSTEM

The O & M Manual is organized into ten chapters. Each chapter is comprised of several major topics. The O&M Manual table numbering system was developed to help the reader to be able to readily identify the chapter and topic for a given table. The table number takes the form:

XX (Roman)	LL	LLX	X (Arabic)
CHAPTER	TOPIC	STRUCTURE	TABLE NUMBER

The first group of characters (up to four Roman numerals) identifies the chapter number which the table refers to. For example, III stands for Chapter Three.

The second group of character (two alphabetical characters) are an acronym for a particular topic which the table refers to. For example, III-FL identifies Filtration Facilities, Chapter Three.

The third group of characters (up to four characters, which may be alphabetical or alpha-numeric) are an acronym for a particular structure which the table refers to. For example, III-FL-FB1 stands for Filter Building No. 1, Filtration Facilities, Chapter Three.

The forth group character is an arabic numeral and identifies the table number. For example, Table III-FL-FB1-1 identifies Table 1, Filter Building 1, Filtration Facilities, Chapter Three.

F. **O&M MANUAL FIGURE NUMBERING SYSTEM**

The O&M Manual is organized into ten chapters. Each chapter is composed of several major topics. The O&M Manual figure numbering system was developed to help the reader to be able to readily identify the chapter and topic for a given figure. The figure number takes the form:

XX (Roman)	LL	LLX	XX (Arabic)
CHAPTER	TOPIC	STRUCTURE	FIGURE NUMBER

The first group of characters (up to four Roman numerals) identifies the chapter number which the figure refers to. For example, III stands for Chapter Three.

The second group of characters (two alphabetical characters) are an acronym for a particular topic which the figure refers to. For example, III-SG identifies Screen and Grit Removal, Chapter Three.

The third group of characters (up to four characters, which may be alphabetical or alpha-numeric) are an acronym for a particular structure which the figure refers to. For example, III-SG-SG1 stands for Screen and Grit Building No. 1, Screen and Grit Removal, Chapter Three.

The fourth group of characters (up to two arabic numerals), identifies the figure number. For example, Figure III-SG-SG1-1 identifies Figure 1, Screen and Grit Building No. 1, Screen and Grit Facilities, Chapter Three.

For figures in Chapter I the second and third group of characters has been replaced by the alphabetical characters "IN", which is an acronym for "INTRODUCTION". For example, Figure I-IN-2 stands for Figure 2, Introduction, Chapter One.

When a figure is common to two structures, both of these structures are indicated in the third group of characters with a slash between them. For example III-SG-SG1/SG2-5 identifies Figure 5, Screen and Grit Buildings No. 1 and No. 2, Screen and Grit Removal Facilities, Chapter Three.

I-IN-PD PLANT DESCRIPTION

A. GENERAL

The plant processes and service area is described in Chapter II. The facilities which make up the plant are listed in Table I-IN-1. A brief history of the Howard F. Curren AWTP is presented below.

B. HISTORY OF CONSTRUCTION

(1) FIRST REVENUE BOND PROGRAM

The first revenue bond program was initiated in 1949-1950. City bonds were sold to finance construction of treatment facilities including the Raw Sewage Pumping Station, Old Screen and Grit Building (now abandoned), Bypass Structure, four Primary Sedimentation Tanks, Effluent Building, Outfall Structure, Anaerobic Digestion Tanks No. 1, 2 and 3 and associated Control Building A, and Sludge Drying Beds.

(2) THIRD REVENUE BOND PROGRAM

The third revenue bond program was initiated in 1963. City bonds were sold to finance construction of additional Anaerobic Digestion Tanks Nos. 4 and 5 and associated Control Building B.

(3) FOURTH WASTEWATER IMPROVEMENT PROGRAM

The Fourth Wastewater Improvement Program relying heavily on USEPA and State grant funding, as well as City Bonds, was initiated in 1969. These funds financed the cost of the 60 mgd advanced wastewater treatment facilities listed in Table I-IN-1 as "4H" and "4L" contracts.

(4) FIFTH WASTEWATER IMPROVEMENT PROGRAM

The Fifth Wastewater Improvement Program relying heavily on State Revolving Loans as well as City Bonds, was initiated in 1988. These funds financed the cost of improvements to the processes and expansion of the advanced wastewater treatment facilities from 60 mgd to 96 mgd. The facilities list in Table I-IN-1 as "5H" contracts were part of the Fifth Wastewater Improvement Program.

TABLE 1-IN-1 FACILITY CONSTRUCTION AND OPERATION AND MAINTENANCE MANUAL HISTORICAL REFERENCE

FACILITY & MODIFICATIONS	CONSTRUCTION CONTRACT	REMARKS
Junction Chamber No. 1 • Odor Control Equipment • Flowmeter MS-1 • Addition of Preaeration Chamber No. 3	4H7 4L4 5H3A	 Supplemented Ozone Equipment and exhaust fan Not utilized since Screen & Grit Building not used. Also modified odor control.
Raw Sewage Pumping Station • Electrical Modernization • Added sludge gas engines	K5/L4 4H17 4H10	
Screen and Grit Building (old)	K6/L3	No longer in use.
Primary Sedimentation Tank Nos. 1-4 • Replaced Pumps in Control Building A and B • Rehab Primary Sedimentation Tanks • Sludge Collector Rehab	K2/L1 9-168 4H24 0-83/J-85	
Primary Sedimentation Tank Nos. 5-8	4H11	
Anaerobic Digestion Tanks No. 1-5 • Rehabilitation of Tank Nos. 1-5	K4 4H10	
Anaerobic Digestion Tank Nos. 6 & 7	4H12	
Mixed Sludge Pumping Station • Add Pump No. 3 • Revised batch controller • Added sludge grinders	4H12 M-92 E-90 7-137	
Power Generation • Modification to Engine Fuel System	K5/M1/M2 4L7	

TABLE 1-IN-1 FACILITY CONSTRUCTION AND OPERATION AND MAINTENANCE MANUAL HISTORICAL REFERENCE

FACILITY & MODIFICATIONS	CONSTRUCTION CONTRACT	REMARKS
Generator Building (Includes Eng. Generator No.3) • Modification to Engine Fuel System • Addition of Engine Generators Nos. 4&5	4H12 4L7 4L6/4L7	
Screen and Grit Building No. 1	5H1	Constructed as Screen and Grit Building No. 3. Renamed Screen and Grit Building No. 1
Screen and Grit Building No. 2 • Replacement Screens • Grit Piping and Valve Replacement	4H4 4H25 9-174	
Junction Chamber and Meter Vault No. 2 • Addition of Sluice Gate, Meter & Rate Controller	4H4 4H11	
Junction Chamber No. 3 • Modified piping	4H7 4H12	
Main Pumping Station • Plant Computer System • Redundant Computer System • Replaced Plant Air Compressor • Additional Pumps • Fuel Storage Tank • Spent Cooling Water Return and FBS Pumps • SCADA System	4H4 4H8/4H8A 9-166 9-178 5H4 F-84 5H4 5H4A	
Operations Building	4H26	
Standby Power Facility	5H3B	

TABLE 1-IN-1 FACILITY CONSTRUCTION AND OPERATION AND MAINTENANCE MANUAL HISTORICAL REFERENCE

FACILITY & MODIFICATIONS	CONSTRUCTION CONTRACT	REMARKS
Reactors • Step Feed Modifications (Reactors No. 1 & 2) • Chlorination of Return S-ludge • Oxygen Vent Valve Modifications • Flow Control Slide Gates • General Modifications	4H4 4H19 4H19 4H19 4H18 4H23	
Diffused Air Reactors	5H4	
Intermediate Pumping Station	4H4	
Sludge Pumping Station No. 1	4H4	
Sludge Pumping Station No. 2 • Waste Sludge Pumps	4H4 4H23	
Sludge Pumping Station No. 3	4H4	
Final Sedimentation Tank Nos. 1-12 • Flow Control Slide Gates • Secondary Control Weir Modifications • Replacement of Collection Chains & Flights • Influent Skimming Equipment • Sludge Blanket Level Measuring Equipment	4H4 4H18 4H18 A-83/E-84 4H22 4H4	No longer in use
Final Sedimentation Tank Nos. 13-20	5H4	
Sludge Pumping Station Nos. 4 & 5	5H4	

TABLE 1-IN-1 FACILITY CONSTRUCTION AND OPERATION AND MAINTENANCE MANUAL HISTORICAL REFERENCE

FACILITY & MODIFICATIONS	CONSTRUCTION CONTRACT	REMARKS
Filter Building No. 1 and Nitrified Effluent Conduit • Effluent Water Pump Modifications • Liquid Polymer Modifications • Return Sludge Chlorination • TOC Analyzer • Chlorine Analyzer Replaced • Control Room Expansion • Effluent Water Pumps No. 3 & 4 • Chlorine Piping • Nitrate Analyzer • Sampler Replacement	4H6 H-85 4H19 4H19 4H6 5H1 5H2A J-84 5H4 5H4	No Longer in use
Filter Building No. 2	5H1	
Chemical Handling Facilities • Methanol Tank Car Unloading Removed • Methanol Feed Pumps Replaced No. 1 & 2 • Methanol Control Panel Modified • Methanol Feed Pumps No. 3 & 4 • Methanol to DAR's	4H6 4H21 9-172 9-172 5H1 5H4	
Denitrification Filter Nos. 1-20 • Filter Underdrain Modifications • Backwash Air Pipe Modifications • Handrail Modifications	4H6 6-105/8-152 9-176 J-90	Not addressed in O&M manual or supplement

TABLE 1-IN-1 FACILITY CONSTRUCTION AND OPERATION AND MAINTENANCE MANUAL HISTORICAL REFERENCE

FACILITY & MODIFICATIONS	CONSTRUCTION CONTRACT	REMARKS
Denitrification Filter Nos. 21-26 and Nos. 31-36 • Dewatering Pumps	5H1 5H3B	
Post Aeration-Chlorination Tanks • Tank No. 1 & 2 Chlorination/Dechlorination Modifications • Addition of Tank No. 3	4H6 5H3B 5H4	
Dechlorination Building	4H21	
Access Building and Pipe Tunnel	4H6	
Aerobic Digestion Tanks • Modification to Diffused Air Reactors	4H6 5H4	Not in use-replaced with Anaerobic Digestion Tanks
Sludge Treatment Building and Thickening Tanks • Flow Meters & Control Valves Addition • Sludge Blanket Level Measuring Equipment • Polymer Storage and Handling Equipment Addition • Plant Water Equipment Addition • Operating Mode Change • Replace Sludge Pumps w/Centrifical Pumps • Piping Modifications	4H6 4H12 4H19 4H19 CITY 5H2A	No longer in use
Belt Thickener Building	5H2A	
Floating Biological Solids (FBS) Thickeners	4H12	Originally Dissolved Air Flotation

TABLE 1-IN-1 FACILITY CONSTRUCTION AND OPERATION AND MAINTENANCE MANUAL HISTORICAL REFERENCE		
FACILITY & MODIFICATIONS	CONSTRUCTION CONTRACT	REMARKS
Sludge Storage Tanks and Control Building • Belt Filter Presses • Piping Modifications • Piping Modifications • Sludge Storage Tanks No. 4 & 5 • Polymer System • Pump Modifications • Conveyors Modifications	4H9 4L2/H-80 4H14 5H2A 5H3B 5H3B B-81 E-81	Temporary - removed under Div. 5H3B
Sludge Drying Beds • Sludge Grinding Equipment	4H9	No longer in use
Sludge Dewatering Building • Addition to building • Addition to conveyors • Addition to Building & Presses	4H14 4H20 4H20 5H2A	
Sludge Heat Drying Facility	4H20	
Filtrate Pumping Station	5H3A	
Junction Chamber No. 4 • Rapid mixers	4H7 5H3B	
Junction Chamber No. 5	5H4	
Junction Chamber No. 6	5H1	
Reclaimed Water Pumping Station	K-84	
Overflow Structure	4H7	
Oxygen Generation and Storage Equipment • Process Control Modifications • Slab for new storage tank • Capacity expansion	4L1 4H23 5H4 4H23B	Also replaces main heat exchangers

TABLE 1-IN-1 FACILITY CONSTRUCTION AND OPERATION AND MAINTENANCE MANUAL HISTORICAL REFERENCE

FACILITY & MODIFICATIONS	CONSTRUCTION CONTRACT	REMARKS
Maintenance Building • Replacement of Air Conditioning System • Expansion	4H5 5H2D	Originally Operations and Maintenance Building
Administration Building • Laboratory Information Management System	5H2B 5H2C	
13.2 KV Metal Clad Switchgear • Additional Breakers • New Enclosure • Modifications • Modifications	4H4 5H1 9-171 4H10 7-135	
Outdoor Substation Transformers • Additional Transformers • Additional Transformers • Additional Transformers • Additional Transformers • Additional Transformers • Repair of 4 Transformers • Repair of Transformers	4H4 4H7/4H9 4H12 4H20 5H1 5H2A 5H2D/5H4 9-185 8-149	
Plant Security System	8-159	
Waste Oil Tank - Primary Plant	9-183	
Rehab. Technical Service Building - Primary	8-162	

CHAPTER II

PROCESS DESCRIPTION

II-PD-GN - GENERAL

A. GENERAL DESCRIPTION OF TREATMENT PLANT

This chapter describes the treatment processes at the Howard F. Curren Advanced Wastewater Treatment Plant. Processes are described in order of wastewater flow through the plant.

The treatment plant site plan is shown on Figure II-1 and the plant flow diagram is shown on Figures II-2A and II-2B. A hydraulic profile is shown on Figure II-3.

The Howard F. Curren Advanced Wastewater Treatment Plant comprises preliminary, primary, secondary and tertiary treatment facilities. The facilities were constructed as a part of several wastewater improvement and expansion programs beginning in the early 1950's. The plant treats all of the wastewater from the City of Tampa, and from several outside customers. The resulting effluent is suitable for discharge into Tampa Bay, but a portion of the effluent is also reused within and outside of the plant.

The advanced wastewater treatment plant effluent discharge limitations as required by the State of Florida and the National Pollution Discharge Elimination System (NPDES) Permit No. FL 0020940 are shown in **Appendix A.**

The treatment plant is designed to provide removal of total suspended solids (TSS), five-day biochemical oxygen demand (BOD_5), and nitrogen (N).

B. INFLUENT INTERCEPTORS AND FORCE MAINS

(1) SEDDON ISLAND FORCE MAIN

The Seddon Island Force Main conveys wastewater from the Krause Street Pumping Station which serves the downtown area and the areas tributary to the West River and Bay Shore Boulevard Interceptor Sewers. The force main discharges at Junction Chamber No. 1.

(2) MAIN OUTLET INTERCEPTOR

The Main Outlet Interceptor conveys wastewater from the Ybor City and Palmetto Beach areas and the east central portion of Tampa to the Raw Sewage Pumping Station at the treatment plant. The force main from the Raw Sewage Pumping Station discharges at Junction Chamber No. 1.

(3) 26TH STREET FORCE MAIN

The 26th Street Force Main conveys wastewater from the Ybor Pumping Station which serves the areas tributary to the Central Intercepting System. The force main discharges to Junction Chamber No. 1.

(4) **INTERBAY FORCE MAIN**

The Interbay Force Main conveys wastewater from the San Carlos Pumping Station which serves areas tributary to the Manhattan and Clark Street Intercepting Sewers on the Interbay Peninsula. The force main discharges to Junction Chamber No. 1.

(5) **EAST TAMPA FORCE MAIN**

The East Tampa Force Main conveys wastewater from the 42nd Street Trunk Sewer (serving the East Tampa area), Brandon, and the Palm River Road Force Main (from the U.S. 301 Pumping Station and Interceptor). The force main discharges to Junction Chamber No. 1.

C. BASIC PROCESS DESCRIPTION

(1) **GENERAL**

This section provides a general process description for the Howard F. Curren Advanced Wastewater Treatment Plant. Subsequent sections describe each process in more detail. Wastewater flows to the Plant at **Junction Chamber No. 1** through numerous force mains. Flows to the plant come from as far away as the Tampa Palms area. Flow from the local area comes to the on-site Raw Sewage Pumping Station through the Main Outlet Interceptor. The wastewater from the Raw Sewage Pumping Station discharges to Junction Chamber No. 1 where it blends with the remainder of the wastewater from the City of Tampa. Figures II-2A and II-2B provide an overall plant flow diagram showing how flow is routed through the plant.

Expected concentrations of pollutants through the plant in general are as follows:

PROCESS	AVERAGE INFLUENT AND EFFLUENT CONCENTRATIONS (mg/l)		
	BOD	TSS	N
Junction Chamber No. 1 (Plant Influent)	264	203	30
Primary Sedimentation Effluent	169	100	24
Secondary Treatment Effluent	27	12	15
Nitrification Effluent	5	11	14
Denitrification (Final) Effluent	2	2	2

(2) **MODES OF OPERATION**

The secondary treatment and nitrification systems are very flexible. The facilities consist of the high purity oxygen (HPO) activated sludge system and the diffused air reactor (DAR) activated sludge system. Table II-1 shows a bases of design for each of the wastewater treatment processes. These systems can be operated in the series or parallel modes described in detail in this section and in general as follows:

a. SERIES MODE

In the series mode of operation (see Figure II-PD-GN-2), the six reactors in the HPO system in conjunction with the **Final Sedimentation Tanks No. 1-12**, are used for secondary treatment and carbonaceous BOD_5 removal. All of the plant flow passes through and is treated by the HPO system. The DAR system, consisting of four reactors and **Final Sedimentation Tanks No. 13-20**, is used for second stage nitrification treatment. After treatment in the HPO system, all of the plant flow passes through and is treated by the DAR system. The DAR system effluent passes through Junction Chamber No. 6 to the Denitrification Filters.

b. PARALLEL MODE

In the parallel mode of operation (see Figure II-PD-GN-3), the HPO and DAR systems are operated in parallel. A portion of the primary effluent from the **Main Pumping Station** (up to 26 mgd, average) is directed through Junction Chamber No. 5 to the DAR system. The remainder of the flow (up to 70 mgd, average) is directed to the HPO system. In the parallel mode, the DAR system is operated as a single-stage nitrification system in which biological denitrification is also possible. The HPO system, in the parallel mode, can be operated as a two-stage nitrification system or as a single-stage system. The two systems operate independently. The effluent from the HPO and DAR systems goes to the **Denitrification Filters**.

(3) PRELIMINARY AND PRIMARY TREATMENT

Wastewater enters the plant at **Junction Chamber No. 1** where it is aerated to release hydrogen sulfide from solution. The off gases from the junction chamber are collected and passed through an odor control system before discharge to the atmosphere. The Junction Chamber No. 1 effluent goes to **Screen and Grit Buildings No. 1 and 2** which act in parallel. The wastewater passes through mechanical bar screens before proceeding to the grit removal tanks in each building. The screenings which are removed are conveyed to dumpsters for temporary storage. The grit slurry removed from the grit tanks is washed and dewatered prior to discharge to a dump truck.

The effluent from both Screen and Grit Buildings is combined and directed to the eight Primary Sedimentation Tanks. Sludge is settled from these tanks and scum is removed from the surface. Both the sludge and the scum are sent to the **Auaerobic Digestion Tanks** through the Mixed Sludge Pumping Station.

(4) SECONDARY TREATMENT

Secondary treatment for carbonaceous BOD removal is provided by the activated sludge processes. In the series mode, BOD is removed in the covered **HPO reactors** (aeration tanks) in combination with **Final Sedimentation Tanks No. 1-12.** Wastewater enters the reactors and is combined with return sludge to form the mixed liquor. Mechanical aeration equipment is provided to transfer high purity oxygen to the mixed liquor in the reactors. In the Final Sedimentation Tanks No. 1-12, the solids (activated sludge) are removed from the mixed liquor by gravity settling. The solids are returned to the reactors continuously and some are wasted from the process, as required.

In the parallel mode of operation, part of the BOD removal occurs in the HPO system, as described above and part in the DAR system. The DAR system is single-stage in that carbonaceous BOD removal and nitrification occur in the same reactors. Wastewater enters the DAR's and is combined with return sludge from Final Sedimentation Tanks No. 13-20. Fine bubble diffusers are provided to transfer oxygen from the air. The air is provided by multistage centrifugal blowers. In Final Sedimentation Tanks No. 13-20, the solids (activated sludge) are removed from the mixed liquor by gravity settling. The solids are returned to the DAR's continuously and some are wasted from the process, as required.

(5) **NITRIFICATION**

Nitrification is the biological oxidation of ammonia (NH_4^+) to nitrate (NO_3^-); nitrification is the first step toward nitrogen removal. In the series mode of operation, nitrification occurs in the DAR system. Carbonaceous stage effluent from the HPO system passes through Junction Chamber No. 5 and is pumped to the reactors by the Nitrification Pumping Station. The carbonaceous effluent combines with the return sludge from Final Sedimentation Tanks No. 13-20 to form the mixed liquor. Air is blown through fine bubble diffusers at the bottom of the DAR's. Because of the high BOD and suspended solids removal efficiency of the carbonaceous stage activated sludge process, a regulated stream of primary treatment effluent (carried in the "spike" line) can bypass the carbonaceous stage, through Junction Chamber No. 5, and be fed directly to the nitrification stage to supplement the food supply required by the nitrifying bacteria.

In the Final Sedimentation Tanks No. 13-20 under the series mode of operation, the solids (activated sludge) are removed from the mixed liquor by gravity settling. The solids are returned to the DAR's continuously and some may be wasted from the process, as required.

In the parallel mode of operation, nitrification occurs in both the HPO and DAR systems. In the HPO system, Reactors No. 3-6 are used for second-stage nitrification treatment. Solids (activated sludge) from the Final Sedimentation Tanks No. 7-12 are returned continuously to mix with the carbonaceous effluent and form the mixed liquor. A "spike" line is also available for this system.

As described under "Secondary Treatment" above, the DAR's under the parallel mode operate as a single-stage nitrification system where carbonaceous BOD removal and nitrification occur in the same reactor. In the DAR system, under the parallel mode of operation, it is possible to also denitrify as described below and in Section II-PD-AT and in Chapter III.

In the Final Sedimentation Tanks No. 13-20 under the parallel mode of operation, the solids (activated sludge) are removed from the mixed liquor by gravity settling. The solids are returned to the DAR reactors continuously and some may be wasted from the process, as required.

(6) **DENITRIFICATION**

There are 32 **denitrification filters** arranged for control in four groups of six or ten. During the normal filter cycle, methanol is added to the nitrified effluent before it enters the filters. The

wastewater passes through the filter media where it comes in contact with the facultative denitrifying bacteria on the media. It is here that the bacteria biologically convert the nitrate to nitrogen gas.

The nitrogen gas forms small gas bubbles within the filter. The nitrogen gas bubbles accumulate in the filter media. A nitrogen release cycle, which is a short backwash with water only, is used to release the nitrogen gas which becomes trapped in the filter media and gradually inhibits flow through the filter, increasing the water level. Generally, the nitrogen release cycle backwash will be required every two hours. If the nitrogen release backwash cycle is not performed at the required interval, the nitrogen gas will continue to accumulate and the head loss through the filter will increase just as would a dirty filter and the flow rate through the affected filter will be reduced. Automatic controls are arranged to provide an adjustable duration water backwash, in sequence, to each 10-filter or 6-filter group.

Each filter will require a full backwash cycle about once per day. The full backwash cycle comprises pre-air, air-water, and a post-water wash. Automatic controls are provided to backwash individual filters as required between nitrogen release cycles.

Denitrification can also be performed at the DAR in the series or the parallel modes of operation. In series, methanol must be added. In parallel, no methanol is required. In either case, denitrification at the DAR's will reduce the load of nitrate to the denitrification filters but will not reduce nitrate levels to that required in the final effluent.

(7) POST AERATION/CHLORINATION/DECHLORINATION

Chlorination is provided in the post aeration-chlorination tanks for disinfection of the plant effluent. A chlorine residual of 1.0 mg/l or greater (permit requirement) must be maintained at the chlorination tank effluent weirs. Sulfur dioxide is added in an amount to decrease the chlorine residual to less than 0.01 (permit requirement) in the final effluent. The reaction time for the sulfur dioxide to react with the chlorine is almost instantaneous.

As discussed above denitrification is a facultative process. Therefore, the effluent from denitrification will have little or no dissolved oxygen (DO). Reaeration of the denitrification filters effluent is provided in the post aeration-chlorination tanks by diffused air. The DO in the wastewater must be raised to at least 5 mg/l (permit requirement).

(8) SLUDGE TREATMENT SYSTEM

Sludge settled at the Primary Sedimentation Tanks is pumped to the Mixed Sludge Pumping Station. Waste sludge from the biological processes is pumped to the Gravity Thickening Tanks and/or the Belt Thickener Building for thickening. Thickened WAS is pumped to the MSPS where it mixes with the primary sludge. The MSPS sequentially pumps the sludges to all seven anaerobic digesters.

Digested sludge is pumped to the **Sludge Storage Tanks**. Sludge from the storage tanks is pumped to the belt filter presses in the **Sludge Dewatering Building** or the **Sludge Drying Beds**. The dewatered sludge is conveyed to the **Heat Drying Facility** where it is converted to fertilizer pellets.

Alternatively, digested sludge can be pumped from the **Sludge Storage Tanks** to the **Sludge Drying Beds** should normal downstream equipment be unavailable.

Table II-2 shows the bases of design for the sludge treatment.

II-PD-PR - PRELIMINARY AND PRIMARY TREATMENT

A. GENERAL

The preliminary and primary treatment facilities consist of the Raw Sewage Pumping Station, Junction Chamber No. 1, Screen and Grit Buildings No. 1 and 2 Junction Chamber and Meter Vault No. 2, Junction Chamber No. 3, and the Primary Sedimentation Tanks and Sludge Pump Stations. The Basis of Design for these facilities is presented in Table II-1. The flow diagram showing these facilities is shown on Figure II-2A.

B. RAW SEWAGE PUMPING STATION

(1) DESCRIPTION

Wastewater from the Main Outlet Interceptor flows to the Raw Sewage Pumping Station by gravity. As the wastewater enters the pumping station wet well, rags, paper and plastic products and other large debris are removed by manually-cleaned bar screens. The wastewater is then pumped to Junction Chamber No.1 through a 36-inch conduit.

C. JUNCTION CHAMBER NO. 1

(1) DESCRIPTION

The wastewater entering the plant from several force mains serving the City is combined in Junction Chamber No. 1. The incoming wastewater contains a high concentration of hydrogen sulfide that causes corrosion problems and an odor nuisance.

Four rotary positive displacement blowers provide compressed air for hydrogen sulfide stripping in the preaeration tanks of Junction Chamber No. 1. The blowers also provide air to aerate the influent and effluent channels of Junction Chamber No. 1 to maintain solids in suspension.

Spent air and hydrogen sulfide from the influent and effluent channels and the preaeration tanks are collected with exhaust blowers and treated with sodium hydroxide and sodium hypochlorite for odor control. The exhaust air can contain as much as 1,200 ppm hydrogen sulfide. The treated air can be released to the atmosphere or recycled through the blowers.

Scum and floating solids can be collected, pumped to **Junction Chamber No. 3** and mixed into the primary sedimentation tank influent.

Wastewater flow from Junction Chamber No. 1 can go to **Screen and Grit Buildings No. 1 and 2**. A rate controller is located in Meter Vault No. 1 of Chamber No. 1 to permit a portion of the plant flow to be sent to the Screen and Grit Building associated with the original primary treatment plant. However, the old screen and grit building, downstream of Meter Vault No. 1, is abandoned and the rate controller in Meter Vault No. 1 is no longer in service.

(2) **PROCESS THEORY**

Hydrogen sulfide gas which is dissolved in the wastewater is released in large quantities when agitated by aeration. The released hydrogen sulfide is oxidized to sulfuric acid in the crowns of sewers flowing partially full and under walkways of tanks and effluent channels where surfaces are damp and oxygen is available. The sulfuric acid, being a strong acid, corrodes the concrete and metals in the affected areas.

High intensity aeration is provided in the three pre-aeration tanks in Junction Chamber No. 1 which will create sufficient turbulence to release most of the dissolved hydrogen sulfide gas.

The pre-aeration tanks in Junction Chamber No. 1 are covered tanks and the air which has been used to release the hydrogen sulfide is collected in the space above the liquid surface. This hydrogen sulfide laden air is then removed from the pre-aeration tanks by exhaust fans to the odor control facility.

The odor control facility consists of three reaction chambers that operate in series as caustic scrubbers. In the reactors, the exhaust air from the pre-aeration tanks is contacted with a fine mist of sodium hydroxide (caustic) solution. The solution has a high pH, and at a high pH, hydrogen sulfide tends to go into solution as sodium sulfide. Therefore, in the reactors the hydrogen sulfide is taken from the exhaust air and into solution. Sodium hypochlorite is added to the spent solution from the reactors to oxidize the hydrogen sulfide in solution to sodium sulfate. This reaction stabilizes the hydrogen sulfide and neutralizes the pH. The solution is returned to the wastewater stream.

D. SCREEN AND GRIT BUILDINGS NO. 1 AND 2

(1) **DESCRIPTION**

Following pre-aeration in Junction Chamber No. 1, wastewater flows to Screen and Grit Buildings No. 1 and 2. In the Screen and Grit Buildings, the wastewater flows through mechanical bar screens where rags, paper products, plastic products and other large debris are removed. The debris is removed to protect downstream equipment and to enhance the value of the fertilizer product produced in the sludge **Heat Drying Facility**.

After screening, the wastewater flows to one or more of the four grit settling tanks in each building where grit is removed. Grit is removed to prevent damage to pumps and other treatment plant equipment.

(2) **PROCESS THEORY**

There are three screens located in Screen and Grit Building No. 1 and two screens in Screen and Grit Building No. 2. The screens are sized to accept the peak wastewater flow through four screens, so one screen in Building No. 1 is a standby. The removed screenings are collected in dumpsters and taken to landfill.

Wastewater enters the grit settling tanks and passes through adjustable flow deflectors which are set to provide a uniform flow velocity across the entire width of the tank. The tanks are designed so that

at least 90 percent of all grit with a specific gravity of 2.65 or greater and coarser than 150-mesh settles to the floor of the grit settling tanks. However, because of low flow velocity in the grit settling tanks, some organic solids also settle to the floor of the tanks. The grit and organic solids are scraped to a sump and pumped to grit washing equipment. The grit slurry pumped from the grit settling tanks is concentrated in cyclone grit separators and washed and dewatered in rake type grit classifiers. Grit-free liquid and organic solids are returned to the grit settling tanks.

E. JUNCTION CHAMBER AND METER VAULT NO. 2

(1) DESCRIPTION

Effluent from Screen and Grit Buildings No. 1 and 2 flows to Junction Chamber No. 2, which is connected to Meter Vault No. 2 by underground conduits. Meter Vault No. 2 contains rate controller equipment which is used to divide the sewage flow between **Junction Chamber No. 3** (located ahead of Primary Sedimentation Tanks Nos. 1-4), Primary Sedimentation Tanks No. 5-8, and the **Main Pumping Station** wet well. Under normal operating conditions, all flow is divided between the two sets of primary sedimentation tanks. Flow is discharged directly to the Main Pumping Station wet well only when primary treatment is to be bypassed.

F. JUNCTION CHAMBER NO. 3

(1) DESCRIPTION

Junction Chamber No. 3 receives flow from Junction Chamber No. 2 and discharges primarily to Primary Sedimentation Tanks No. 1-4. Originally, flow from the screen and grit building associated with the original primary treatment plant also flowed through Junction Chamber No. 3. However, the old screen and grit building has been abandoned and the influent pipeline from the old screen and grit building is no longer used.

In emergency conditions, Junction Chamber No. 3 allows the bypass of the plant. The emergency bypass flows to the Plant Outfall Structure and is not used under any normal operation.

Junction Chamber No. 3 has a mixer and chemical pipelines which were used to blend chemicals (to enhance settling or for phosphorus removal) prior to primary sedimentation. The chemical feed and pipeline equipment are no longer in service.

G. PRIMARY SEDIMENTATION TANKS

(1) DESCRIPTION

Wastewater from Junction Chamber No. 3 and Meter Vault No. 2 enters the two sets of four primary sedimentation tanks through inlet ports from the influent channel. The inlet ports are sized to distribute equal amounts of flow to each sedimentation tank. In addition to the wastewater, Tanks No. 1, 2, 5 and 6 can receive the scum removed from the final sedimentation tanks.

Sludge that settles to the floor of the primary sedimentation tanks is pushed to the west end of the tanks by longitudinal collectors. The sludge is then conveyed by a cross collector to the sludge sump and pumped from the sump to the Mixed Sludge Pumping Station.

The longitudinal collectors, on their return path along the surface, transport scum and other floating material to the scum baffle near the east end of the tanks. A regulated amount of liquid containing the scum and floatable solids is manually skimmed to the scum concentration tank in the Sludge Pumping Station for Tanks No. 1-4 and to a scum sump for Tanks No. 5-8. Concentrated scum is pumped to the Mixed Sludge Pumping Station where it is sent to the anaerobic digestion tanks for digestion and ultimate disposal with the digested sludge.

The primary sedimentation tank effluent passes over rectangular weirs and flows through effluent troughs to the effluent channel.

II-PD-AT - ADVANCED TREATMENT

A. GENERAL

The advanced treatment facilities consist of the Main Pumping Station, High Purity Oxygen Reactors, Diffused Air Reactors, Final Sedimentation Tanks and Return Sludge Pumping Stations, Intermediate Pumping Station, Nitrification Pumping Station, Junction Chamber No. 5 and No. 6, Filter Building No. 1 and No. 2, Denitrification Filters and Post Aeration/Chlorination/Dechlorination Tanks. The bases of Design for these facilities is presented in Table II-1. The flow diagram showing these facilities is shown on Figures II-2A and II-2B.

B. MAIN PUMPING STATION

(1) DESCRIPTION

Wastewater from the primary sedimentation tanks flows to the Main Pumping Station. The wastewater is then pumped to the Main Pumping Station Discharge Channel and the Reactors Influent Channel.

The Main Pumping Station has three variable-speed 40 mgd pumps, two constant-speed 40 mgd pumps, and two variable-speed 50 mgd pumps. The station has a firm capacity of 250 mgd with one large pump out of service.

C. OXYGEN ACTIVATED SLUDGE TREATMENT - CARBONACEOUS BOD REMOVAL - SERIES MODE[1]

(1) DESCRIPTION

Facilities normally employed in the high purity oxygen (HPO) activated sludge carbonaceous BOD removal process in the series mode are **HPO Reactors No. 1 through 6, Final Sedimentation Tanks No. 1 through 12** and **Return Sludge Pumping Stations No. 1, 2, and 3.**

In the reactors, soluble and insoluble organic material in the wastewater is converted to settleable sludge which is removed in the final sedimentation tanks.

---

[1] Note that the oxygen activated sludge treatment facilities can be operated in series or in parallel with the diffused air reactors as described in Section II-G.

(2) **PROCESS THEORY**

The activated sludge process is a biological treatment process where wastewater and activated sludge are mixed together, agitated to maintain solids in suspension and aerated to promote biological growth. The suspension of wastewater and activated sludge is called the mixed liquor. The activated sludge, which is sludge floc produced by the growth of various bacteria and other organisms in the presence of dissolved oxygen, is removed from the treated wastewater in the final sedimentation tanks. The activated sludge is returned continuously to the reactors to maintain a desired mixed liquor suspended solids (MLSS) concentration. Some of the solids are wasted, as required. The length of time the solids remain in the system is called the solids retention time (SRT). Typically, the target SRT is 0.5 days or less and is calculated as follows:

$$\frac{MLSS \times V}{Qw \times Cw}$$

Where:

MLSS	=	mixed liquor suspended solids, mg/l
V	=	volume of HPO reactors in service, million gallons
Qw	=	waste sludge flow rate, mgd
Cw	=	concentration of waste sludge solids, mg/l

High purity oxygen is supplied to the covered reactors from on-site oxygen generation facilities. Mechanical surface aerators transfer the oxygen into the mixed liquor and provide agitation to maintain solids in suspension.

The gentle flow in the final sedimentation tanks permits the activated sludge to be removed from the mixed liquor by settling. The solids come together and form flocs during sedimentation. As flocculation occurs, the effective size of the suspended particles increases and the rate of settling increases.

The gentle flow in the final sedimentation tanks also allows floatable biological solids (FBS) and other floatable material to accumulate on the liquid surface. The FBS is removed from the tanks and transferred to the FBS Thickening Facility or to the Primary Sedimentation Tanks.

D. OXYGEN ACTIVATED SLUDGE TREATMENT - CARBONACEOUS BOD REMOVAL - PARALLEL MODE

(1) **DESCRIPTION**

Facilities normally employed in the HPO activated sludge carbonaceous BOD removal process in the parallel mode are **Reactors No. 1 and 2, Final Sedimentation Tanks No. 1 through 6**, and **Returu Sludge Pumping Stations No. 1 and 2**. Reactor No. 3 is designated as a "Swing Reactor" and may be used for either Carbonaceous or Nitrification service.

As in the series mode, soluble and insoluble organic material in the wastewater is converted to settleable sludge which is removed in the final sedimentation tanks.

(2) **PROCESS THEORY**

The process theory for carbonaceous BOD removal in the parallel mode is identical to that described above for the series mode.

E. INTERMEDIATE PUMPING STATION

(1) **DESCRIPTION**

The Intermediate Pumping Station is only used under the parallel operating mode. Carbonaceous effluent from Final Sedimentation Tanks No. 1-6 flows to the Intermediate Pumping Station wet well by way of an underground conduit where it is then pumped to the reactors by way of the Intermediate Pumping Station Discharge Channel and the Reactors Influent Channel.

F. OXYGEN ACTIVATED SLUDGE TREATMENT - NITRIFICATION - PARALLEL MODE

(1) **DESCRIPTION**

Facilities normally employed in the high purity oxygen (HPO) activated sludge nitrification process are HPO **Reactors No. 4, 5 and 6, Final Sedimentation Tanks Nos. 7-12** and **Return Sludge Pumping Stations Nos. 2 and 3**. Reactor No. 3 is designated as a "Swing Reactor" and may be used for either Carbonaceous or Nitrification service.

In the reactors, ammonia nitrogen is biologically oxidized to the nitrate form which is removed from the wastewater in the denitrification filter process. A pipeline (the "spike"line) carrying primary effluent bypasses the carbonaceous stage of activated sludge treatment and is provided to add extra food for the microorganisms in the nitrification reactors.

Some nitrogen and soluble organic material in the wastewater are converted to settleable sludge and are removed in the final sedimentation tanks.

(2) **PROCESS THEORY**

In the oxygen activated sludge process for nitrification, ammonia is biologically oxidized to nitrite by the following chemical reaction:

$$NH_4^+ + \frac{3}{2}\,0_2 \xrightarrow[\text{Bacteria}]{\text{Nitrosomonas}} NO_2^- + 2H^+ + H_20$$

The nitrite is then oxidized to nitrate by the following reaction:

$$NO_2^- + 1/2\ 0_2 \xrightarrow[\text{Bacteria}]{\text{Nitrobacter}} NO_3^-$$

The nitrification oxygen activated sludge process requires a longer solids retention time (SRT) in the reactors than does the carbonaceous oxygen activated sludge process. An SRT of about 8 days is generally adequate for complete nitrification. The reaction needs to be completed such that the majority of the nitrogen is in the nitrate form so that it can be further converted to nitrogen gas and removed in the denitrification filters.

A very small amount of solids is produced by the nitrification process. Only occasional wasting of sludge is necessary. Typically, the nitrification sludge is wasted to the Main Drain where it flows to the Main Pumping Station for recycling to carbonaceous stage treatment.

The gentle flow in the final sedimentation tanks permits the activated sludge to be removed by gravitational settling.

FBS is removed from the nitrification stage final sedimentation tanks in the same manner as described hereinbefore for the carbonaceous stage tanks.

G. OXYGEN ACTIVATED SLUDGE TREATMENT - SINGLE-STAGE NITRIFICATION - PARALLEL MODE

(1) DESCRIPTION

While operating in parallel with the Diffused Air Reactor, activated sludge system, the HPO system can be operated in the single-stage nitrification mode. Facilities normally employed in the HPO activated sludge single-stage nitrification system are **Reactors No. 1-6, Final Sedimentation Tanks No. 1-12**, and **Return Sludge Pumping Stations No. 1-3.**

In the reactors, carbonaceous BOD is removed and ammonia nitrogen is biologically converted to nitrate. The settleable solids are removed in the final sedimentation tanks.

(2) PROCESS THEORY

Normally, this single-stage nitrification will only be used when flows to the plant are high during summer wet weather conditions since this mode is not as efficient in the use of oxygen as the two-stage operation. The advantage is that the surface overflow rate (flow rate ÷ surface area of final tanks) will be lower in single-stage since all 12 final sedimentation tanks are in service in parallel. The process theory regarding the formation of solids and for nitrification is the same as described above for two-stage operation. An SRT of only 2-3 days will be possible under single-stage nitrification. The 2-3 day SRT is sufficient for nitrification in the summer when the water temperature is warm.

H. DIFFUSED AIR ACTIVATED SLUDGE TREATMENT - NITRIFICATION - SERIES MODE

(1) DESCRIPTION

Facilities normally employed in the diffused air activated sludge nitrification process are the Nitrification Pumping Station, Diffused Air Reactors (DAR) No. 1-4, Final Sedimentation Tanks No. 13-20, and Return Sludge Pumping Stations No. 4 and 5. In the reactors, ammonia nitrogen is biologically oxidized to the nitrate form which is removed from the wastewater in the denitrification filter process. A pipeline (the "spike"line), carrying primary effluent, bypasses the carbonaceous stage activated sludge treatment and is provided through Junction Chamber No. 5 to add supplemental food for the microorganisms in the DAR's.

Carbonaceous effluent is fed to the DAR's from the Nitrification Pumping Station (Pump Nos. 1-7). The flow can be directed to Zone 1 for plug flow operation or to Zone 2 for step feed operation. In

either case, return sludge is sent to Zone 1. The advantage of step feed is that it allows a lower MLSS to be used in Zones 2 through 6 which results in a lower solids load to the Final Sedimentation Tanks.

Settleable sludge is produced which is removed in the Final Sedimentation Tanks No. 13-20.

The facilities at the DAR's also allow operation to biologically denitrify. This mode of operation would only be used to decrease the nitrogen load on the denitrification filters. To biologically denitrify, the air is turned off to Zone 6 or to Zones 5 and 6, the appropriate mixers are turned on in these Zones, and methanol is added. Care must be taken not to overdose with methanol since this adds BOD and there are no facilities downstream of the reactors to remove BOD.

The advantages of denitrifying in the DARs is to reduce the nitrate load on the filters and thereby increase the time between nitrogen release cycles (NRCs). Reducing the number of NRCs reduces the quantity of recycled water in the plant.

(2) **PROCESS THEORY**

The process theory is the same as that described above in Section E.

Denitrification is a biological process, employed to convert the nitrate-nitrogen to nitrogen gas.

The basic denitrification chemical reaction to turn nitrate into nitrogen gas is as follows:

$$NO_3^- + \text{Carbon Source} + \text{Bacteria} \rightarrow N_2 + CO_2$$

For the series mode of operation, when nitrification follows carbonaceous BOD removal, the carbon source is not available in the influent and methanol must be added. The methanol feed pumps are located in the Chemical Treatment Building and are the same pumps used for the Denitrification Filters. The nitrate is available from the mixed liquor formed in the upstream zones. To operate Zone 5 or 6 in the anoxic mode for denitrification, the air to the diffusers is shut off and the mixers are turned on to keep the solids in suspension.

I. DIFFUSED AIR ACTIVATED SLUDGE TREATMENT - SINGLE-STAGE NITRIFICATION - PARALLEL MODE

(1) **DESCRIPTION**

Facilities normally employed in the diffused air (DA) activated sludge process are as described in Section G. In the reactors, carbonaceous BOD is removed, ammonia nitrogen is biologically oxidized to the nitrate form, and nitrate is converted to nitrogen gas. Pump Nos. 1-3, and standby pump No. 4, at the Nitrification Pumping Station are used to pump primary effluent from Junction Chamber No. 5 to the DAR. The flow is typically sent to Zone 2 while return sludge is sent to Zone 1, the step feed mode of operation.

Pump Nos. 5-7, and standby pump No. 4, at the Nitrification Pumping Station are used to recycle mixed liquor containing nitrate. The air to Zone 2 or Zone 2 and 3 is turned off and the appropriate

mixers are turned on. When the combination of primary effluent and recycled mixed liquor enters Zone 2, an anoxic condition is formed, one in which no oxygen is available for the microorganisms so nitrate is the only source of oxygen

In Zone 2 or Zones 2 and 3, the nitrate is converted to nitrogen gas and bubbles out of solution. In Zones 3 through 6 or Zones 4 through 6, carbonaceous BOD is oxidized and ammonia nitrogen is converted to nitrate. As the mixed liquor exits the reactors, some is recycled to provide nitrate and the remainder goes on to the Final Sedimentation Tanks. Settleable sludge is produced which is removed in the Final Sedimentation Tanks.

(2) **PROCESS THEORY**

In the DAR activated sludge process for nitrification, ammonia is biologically oxidized to nitrite and nitrite is oxidized to nitrate as described above for the HPO system. The nitrification DAR activated sludge process requires a longer solids retention time (SRT) in the reactors than does the carbonaceous oxygen activated sludge process. An SRT of about 8 days is generally adequate for complete nitrification. The reaction needs to be completed such that the majority of the nitrogen is in the nitrate form so that it can be further converted to nitrogen gas and removed in the denitrification filters.

Denitrification is a biological process, employed to convert the nitrate-nitrogen to nitrogen gas. In the single-sludge mode of operation, denitrification may be accomplished in the DAR's by using Zone 2 or Zone 2 and 3 as anoxic reactors, where little or no oxygen is present. In this case, mixed liquor from the reactors effluent is recycled to return the nitrate required for the reaction. The nitrate is formed in Zones 3-6 or Zones 4-6, depending on the number of zones used as anoxic reactors.

The basic denitrification chemical reaction to turn nitrate into nitrogen gas is as follows:

$$NO_3^- + \text{Carbon Source} + \text{Bacteria} \rightarrow N_2 + CO_2$$

No methanol is required as the influent primary effluent provides the carbon source in the form of the organic load on the process. The nitrate is available from the recycled mixed liquor. To operate Zone 2 or 3 in the anoxic mode, the air to the diffusers is shut off and the mixers are turned on to keep the solids in suspension.

The nitrification sludge is wasted to the Main Pumping Station for recycling to carbonaceous stage treatment.

The gentle flow in the final sedimentation tanks permits the activated sludge to be removed by gravitational settling.

FBS is removed from the final sedimentation tanks and pumped to the FBS Thickening Facility or the Primary Sedimentation Tanks.

J. DENITRIFICATION FILTERS

(1) DESCRIPTION

Effluent flows from the nitrification stage of Final Sedimentation Tanks No. 13-20 (series mode) or from Final Sedimentation Tanks No. 7-20 (parallel mode) to the denitrification filters. Methanol is added to the flow in the conduits ahead of the filters. Flow is distributed to the 32 denitrification filters.

In the filters, the wastewater flows down through a deep bed of coarse sand and gravel. The bed of sand and gravel is supported by concrete false bottoms which convey filtered effluent and distribute air and water backwashes. During the filter cycle, effluent flows from the filters into the final effluent conduit through valves which are throttled to maintain the water level in the filter.

The control room for the process is located in Filter Building No. 1. Backwash Pumps and Blowers for Filters No. 1-20 are located in Filter Building No. 1. Backwash Pumps and Blowers for Filters No. 21-26 and 31-36 are located in Filter Building No. 2. The backwash water is filter effluent. Methanol feed pumps for all filters are located in the Chemical Handling Building.

(2) PROCESS THEORY

Denitrification, the conversion of nitrate to nitrogen gas, takes place within the filters as in accordance with the following chemical reaction:

$$NO_3^- + \text{Carbon Source} + \text{Bacteria} \rightarrow N_2 + CO_2$$

The nitrate is produced in the nitrification stage High Purity Oxygen Reactors and/or the Diffused Air Reactors (DAR) ahead of the filters. The carbon source used is methanol which is applied in a ratio of about 3 parts of methanol to each part of nitrate in the nitrification effluent. The bacteria form on the filter media and are thus present within the filter to complete the above reaction.

As the above reaction is completed in the filter, nitrogen gas is formed and is trapped within the media, which gradually inhibits the flow of water through the filter. Periodically throughout the day, a "nitrogen release cycle" (NRC) is performed on each operating filter to release the trapped nitrogen bubbles. The NRC consists of a short backwash using the backwash water pumps.

Filters may also become clogged with solids removed from the wastewater. Typically once per day, a "full backwash" is performed to clean each filter. During a full backwash, the backwash water pumps are used together with the backwash blowers to provide a scouring backwash of both water and air.

The Denitrification Filters are designed to remove all of the nitrate produced in the nitrification stage. The nitrate load on the filters may be reduced in the DAR's in either the series mode or the parallel mode of operation, as described above.

K. POST-AERATION / CHLORINATION / DECHLORINATION

(1) GENERAL

Denitrification filter effluent is conveyed to the Post-Aeration/Chlorination Tanks No. 1-3. The purpose of these tanks is to aerate the effluent, to disinfect the effluent, and to remove chlorine residual prior to discharge. The size of the tanks is based on the minimum hydraulic detention time required for disinfection (15 minutes) at the design peak flow rate.

Flow to the tanks comes through the Filter Effluent Channel. An in-line static mixer is located in the channel. Chlorine solution is added to the effluent upstream of the mixer. Downstream of the mixer, flow is distributed to the tanks in operation. Chlorine solution is added so as to maintain a minimum chlorine residual concentration of 1.0 mg/l or greater at the effluent of the tanks for disinfection.

Coarse bubble diffusers are located in the upstream end of each tank to aerate the effluent water to levels required by the discharge permit and to provide further mixing. The air is provided by the process air blowers located in the Main Pumping Station. Aeration is also typically provided by the discharge of the effluent over the effluent weir and the turbulence caused by the fall of several feet.

Dechlorination is provided by the addition of sulfur dioxide to the tank effluent. The sulfur dioxide solution is produced in the Dechlorination Building and the solution is injected at the point that the tank effluent combine and proceed to Junction Chamber No. 4. Mixers are located in Junction Chamber No. 4 to blend the effluent with the sulfur dioxide solution.

The effluent from Junction Chamber No. 4 proceeds to the Outfall Structure where it becomes the final plant effluent discharged to Tampa Bay.

(2) PROCESS THEORY

The disinfection of the effluent from the plant is based on the ability of chlorine to kill bacteria and viruses. The presence of chlorine in wastewater can cause the formation of organochlorine and trihalomethane (THM) compounds. To prevent the formation of these potentially carcinogenic compounds, the effluent is dechlorinated with sulfur dioxide to a residual chlorine concentration of less than 0.01 mg/l.

II-PD-ST - SLUDGE TREATMENT FACILITIES

A. GENERAL

The sludge treatment facilities consists of the Mixed Sludge Pumping Station, Gravity Thickening Tanks and Sludge Treatment Building, Belt Thickener Facility, Floating Biological Solids Thickening Facility, Anaerobic Digestion Tanks, Sludge Storage Tanks and Control Building and Sludge Drying Beds, Sludge Dewatering Building and Heat Drying Facility. The bases of Design for these facilities is presented in Table II-2. The locations of these facilities are shown on Figures II-1, II-2A, and II-2B. Sludge produced at the Primary Sedimentation Tanks is pumped to the Mixed Sludge Pumping Station. Waste sludge from the biological processes is pumped to the Gravity Thickening Tanks and/or the Belt Thickener Building for thickening. Thickened WAS is pumped to the MSPS where it mixes with the primary sludge. The combined sludge is pumped sequentially to the anaerobic digesters. The digested sludge is pumped to the Sludge Storage Tanks.

Liquid sludge is removed from the Sludge Storage Tanks and pumped to Belt Filter Presses at the Sludge Dewatering Building. Liquid may also be pumped from the Sludge Storage Tanks to the Sludge Drying Beds. Sludge from the Belt Filter Presses is conveyed to the Heat Drying Facility where sludge is converted to biosolids in pellet form and sold as a fertilizer. Sludge removed from the Sludge Drying Beds is trucked to land application sites.

B. GRAVITY THICKENING

(1) DESCRIPTION

Waste activated sludge (WAS) removed from the HPO or DAR activated sludge systems may be thickened in the two gravity thickening tanks connected to the Sludge Treatment Building or in the Belt Thickening Building. The WAS enters the Sludge Treatment Building in a pipeline under pressure from Sludge Pumping Station No. 2 or from the waste sludge pumps for the DAR system which are located in the Sludge Treatment Building. When the Gravity Thickeners are used, a selected quantity of WAS is directed to the one or two tanks in service. Dilution water for the process is supplied by pumps located in Filter Building No. 1. In Tampa, sludge can be thickened from less than 1.0 % solids to about 3.5% solids using gravity thickeners.

Polymer storage and feed equipment are located in the Sludge Treatment Building to mix polymer solution and feed it into the influent sludge. The underflow from the tanks is conveyed to the Mixed Sludge Pumping Station by pumps located in the Sludge Treatment Building. The overflow flows by gravity to Junction Chamber No. 2, Primary Sedimentation Tanks No. 1 or 2, or the effluent channel of Primary Sedimentation Tanks No. 1-4.

(2) PROCESS THEORY

The process used for gravity thickening is simple gravity settling. When gravity thickening is used for WAS alone typical maximum loading rates are 4 to 6 pounds solids per square foot per day; however, history in Tampa is that higher loadings (in the range of about 20 lbs./sp/day) may be used successfully. Typically, dilution water is used to increase the hydraulic loading rate and to prevent septicity in the tanks.

C. BELT THICKENING FACILITY

(1) GENERAL

Waste activated sludge (WAS) removed from the HPO or DAR activated sludge systems may be thickened in the two gravity thickening tanks connected to the Sludge Treatment Building or in the Belt Thickening Building. The WAS enters the Sludge Treatment Building in a pipeline under pressure from Sludge Pumping Station No. 2 or from the waste sludge pumps for the DAR system which are located in the Sludge Treatment Building. When the belt thickeners are used, a selected quantity of WAS is pumped to one or more of the belt thickeners in service. WAS from the Sludge Treatment Building can be directed to short-term storage outside of the Belt Thickening Facility or directly to the sludge feed pumps.

Generally, the sludge feed pumps will take sludge from the short-term storage tanks and pump the sludge to the belt thickening units. Polymer is fed to the sludge feed prior to application to the belt

thickening units. The thickened sludge is pumped to the Mixed Sludge Pumping Station. The filtrate flows by gravity to the effluent channel at Primary Sedimentation Tanks No. 1-4. The Belt Thickening Facility also houses the polymer storage and blending equipment and the control room for sludge thickening operations. WAS is typically thickened to a 5.0% solids concentration or more.

(2) **PROCESS THEORY**

Sludge is applied to a fine-weave, 2-M wide fabric belt which prevents the passage of the majority of the solids and allows the clarified liquid, the filtrate, to pass.

D. FLOATING BIOLOGICAL SOLIDS THICKENING FACILITY

(1) **GENERAL**

Floating biological solids (FBS) are thickened by gravity. The solids are collected from the final sedimentation tanks. The solids collected from Final Sedimentation Tanks No. 1-12 are pumped from the Main Pumping Station. The solids collected from Final Sedimentation Tanks No. 13-20 are pumped from Sludge Pumping Station No. 5. FBS is collected and pumped periodically based on timers. The FBS influent to the facility is directed to up to three settling tanks. The underflow from the tanks is pumped to the Mixed Sludge Pumping Station. The overflow flows by gravity to Junction Chamber No. 2.

(2) **PROCESS THEORY**

Even though the solids floated on the final sedimentation tanks, when re-wetted and pumped, the solids settle by conventional gravity methods.

E. ANAEROBIC DIGESTION

(1) **DESCRIPTION**

Sludge and scum removed from the sewage in the primary sedimentation tanks and thickened waste activated sludge and FBS are pumped to the anaerobic digestion tanks. The anaerobic digestion process takes place in circular tanks with floating covers. The digestion process destroys volatile solids and produces methane gas and carbon dioxide.

Heat exchangers are provided to maintain a temperature of 95 degrees F or above in the digestion tanks. The methane gas produced in the digestion tanks is used to fuel five sludge gas engine generators. The generators produce about one third of the electric power used by the plant. Waste heat from the engine generators jacket water cooling system is used in the heat exchangers to heat the sludge. Excess methane gas may also be burned at waste gas burners.

(2) **PROCESS THEORY**

Anaerobic digestion of organic solids, as the name implies, takes place in the absence of oxygen. Microorganisms responsible for the decomposition of organic matter are temperature sensitive. The optimum temperature range for mesophilic microorganisms is 85 degrees to 100 degrees F.

The microorganisms are usually divided into two groups, called the acid formers and the methane formers. The acid formers liquefy and ferment complex organic compounds to simple organic acids.

The most common acids produced are acetic and propionic acid. The methane formers convert these acids to methane gas and carbon dioxide. The conversion of organic acids to methane and carbon dioxide is where the actual stabilization of organic solids occurs.

The process destroys about 50 percent of the volatile solids thereby reducing the total solids for disposal.

F. SLUDGE STORAGE TANKS

(1) GENERAL

About 1.45 million gallons of storage are provided for digested sludge. The tanks provide a buffer ahead of the sludge dewatering process. The tanks may also be used to blend raw and digested sludges if needed to increase the concentration of nitrogen in the sludge. Sludge from the storage tanks is typically pumped to belt filter presses located in the Sludge Dewatering Building. Pumps located in the Sludge Control Building may also be used to pump sludge from the tanks to the Sludge Drying Beds. Polymer storage and blending equipment located in the Sludge Control Building is used for to feed polymer into the sludge going to the Sludge Drying Beds.

G. SLUDGE DEWATERING BUILDING

(1) GENERAL

Digested sludge is dewatered using belt filter presses (BFP's). There are 9 BFP's located in the Sludge Dewatering Building. Each BFP is associated with a sludge feed pump which draws from the Sludge Storage Tanks. Polymer is injected to the sludge feed lines prior to application to each BFP. Polymer storage and blending equipment is also located in the building. Sludge is typically dewatered to about 17.5% solids concentration.

The dewatered sludge is typically conveyed to the Heat Drying Facility. Dewatered sludge may also be conveyed to the Truck Loading Area where it can be directly discharged to trucks for transport.

(2) PROCESS THEORY

Sludge is applied to a fine-weave, 2-M wide fabric belt which prevents the passage of the majority of the solids and allows the clarified liquid, the filtrate, to pass. Additional pressure is applied to the sludge as the belts pass around rollers and the sludge is squeezed.

H. HEAT DRYING FACILITY

(1) GENERAL

Dewatered sludge is dried to about 95% solids concentration at the Heat Drying Facility. Sludge is conveyed into the building from the Sludge Dewatering Building. The dewatered sludge is blended with recycled dry sludge and applied to a rotary dryer. The dried sludge product is classified and the properly sized sludge particles are conveyed to storage. Periodically, the sludge product is removed from storage and trucked to market.

The exhaust gases from the rotary dryer are passed through afterburners to raised the temperature of the gases to 1,400 degrees F to oxidize potential air pollutants. Odor control is also provided for the facility.

(2) **PROCESS THEORY**

The capacity of the Heat Drying Facility is based on the amount of water which must be evaporated to obtain a product of about 95% solids, thus, the dryer the dewatered sludge, the more capacity which is available at the Heat Drying Facility.

APPENDIX A
NPDES PERMIT

CITY OF TAMPA, FLORIDA
HOWARD F. CURREN ADVANCED WASTEWATER TREATMENT PLANT
BASES OF DESIGN - WASTEWATER

TABLE II-1

31-Aug-99

ITEMS		SERIES MODE		PARALLEL MODE			COMMENTS
				HPO 2-STAGE		HPO 1-STEP	
		DAR STANDARD	DAR WITH DENITE	DAR STANDARD	DAR WITH DENITE	& DAR WITH DENITE	
1 BASIC DATA							
FLOW RATE	- MGD	96.0	96.0	96.0	96.0	96.0	
PEAK	- MGD	220.8	220.8	220.8	220.8	220.8	At 2.3 times average.
PLANT INFLUENT CHARACTERISTICS							
- BOD5	- mg/L	264	264	264	264	264	
	- 1000 LB/DAY	211.4	211.4	211.4	211.4	211.4	
- SUSPENDED SOLIDS	- mg/L	203	203	203	203	203	
	- 1000 LB/DAY	162.5	162.5	162.5	162.5	162.5	
- NITROGEN as TKN	- mg/L	30.0	30.0	30.0	30.0	30.0	
	- 1000 LB/DAY	24.0	24.0	24.0	24.0	24.0	
- PHOSPHORUS	- mg/L	9.1	9.1	9.1	9.1	9.1	
	- 1000 LB/DAY	7.3	7.3	7.3	7.3	7.3	
2 JUNCTION CHAMBER NO. 1							
INFLUENT FLOW (MGD)		96.0	96.0	96.0	96.0	96.0	
NUMBER OF TANKS AT 25' x 66'		2	2	2	2	2	
NUMBER OF TANKS AT 30' x 66'		1	1	1	1	1	
DEPTH OF WATER IN TANKS		17.0	17.0	17.0	17.0	17.0	
VOLUME	- CF	89760	89760	89760	89760	89760	
	- MILLION GALLONS	0.67	0.67	0.67	0.67	0.67	
DETENTION TIME	- MINUTES	10.1	10.1	10.1	10.1	10.1	
AIR SUPPLY	- SCFM/1000 CF	116	116	116	116	116	
3 SCREEN AND GRIT FACILITIES							
INFLUENT FLOW (MGD)		96.0	96.0	96.0	96.0	96.0	
MECHANICAL SCREENS							
NUMBER AVAILABLE		5	5	5	5	5	Three at S&G Building No. 1 and two at No. 2.
NUMBER OPERATING		4	4	4	4	4	
CLEAR SPACING BETWEEN BARS - INCHES		0.38	0.38	0.38	0.38	0.38	
GRIT REMOVAL FACILITIES							
NUMBER OF GRIT TANKS AVAILABLE		8	8	8	8	8	Four at each building.
NUMBER OF GRIT TANKS OPERATING		4	4	4	4	4	Two at each building is preferred.
WIDTH OF TANKS	- FT	45.0	45.0	45.0	45.0	45.0	
LENGTH OF TANKS	- FT	45.0	45.0	45.0	45.0	45.0	
SURFACE AREA EACH TANK - FT		2025.0	2025.0	2025.0	2025.0	2025.0	
SURFACE AREA OF OPERATING TANKS - FT		8100.0	8100.0	8100.0	8100.0	8100.0	

CITY OF TAMPA, FLORIDA
HOWARD F. CURREN ADVANCED WASTEWATER TREATMENT PLANT
BASES OF DESIGN - WASTEWATER

TABLE II-1

31-Aug-99

ITEMS		SERIES MODE		PARALLEL MODE			COMMENTS
		DAR STANDARD	DAR WITH DENITE	HPO 2-STAGE DAR STANDARD	HPO 2-STAGE DAR WITH DENITE	HPO 1-STEP & DAR WITH DENITE	
MINIMUM SURFACE AREA REQUIRED - SF/MGD		70	70	70	70	70	Based on removal of 150 mesh grit particles.
ACTUAL SURFACE AREA - SF/MGD		84.4	84.4	84.4	84.4	84.4	Based on operating tanks.
GRIT REMOVED	- CF/MIL. GAL.	2.23	2.23	2.23	2.23	2.23	
	- CF/DAY	214	214	214	214	214	
	- 1000 LBS/DAY	25.7	25.7	25.7	25.7	25.7	Based on 120 lbs/cf.
WASHED GRIT	- PERCENT SOLIDS	75	75	75	75	75	
	- TONS/DAY WET GRIT	17.1	17.1	17.1	17.1	17.1	
4 WEST PRIMARY SEDIMENTATION TANKS NO. 1-4							
INFLUENT FLOW (MGD)		49.2	49.2	49.2	49.2	49.2	Based on 51.25% of flow to west tanks; proportional to the surface area of the tanks.
INFLUENT CHARCTERISTICS							
- BOD5	- mg/L	264	264	264	264	264	
	- 1000 LB/DAY	108.3	108.3	108.3	108.3	108.3	
- SUSPENDED SOLIDS	- mg/L	203	203	203	203	203	
	- 1000 LB/DAY	83.3	83.3	83.3	83.3	83.3	
- NITROGEN as TKN	- mg/L	30	30	30	30	30	
	- 1000 LB/DAY	12.3	12.3	12.3	12.3	12.3	
- PHOSPHORUS	- mg/L	9	9	9	9	9	
	- 1000 LB/DAY	3.7	3.7	3.7	3.7	3.7	
PHYSICAL CHARACTERISTICS							
NUMBER OF AVAILABLE TANKS		4	4	4	4	4	
NUMBER OF OPERATING TANKS		4	4	4	4	4	
AVERAGE WATER DEPTH - FT		13.1	13.1	13.1	13.1	13.1	
SURFACE AREA	- SF PER TANK	6308	6308	6308	6308	6308	
	- TOTAL SF	25232	25232	25232	25232	25232	
TOTAL VOLUME	- CF	330539	330539	330539	330539	330539	
	- MILLION GALLONS	2.47	2.47	2.47	2.47	2.47	
DETENTION TIME	- HR	1.2	1.2	1.2	1.2	1.2	
REMOVALS	- PERCENT						
BOD		36.0	36.0	36.0	36.0	36.0	Based on studies of plant operation.
TSS		51.0	51.0	51.0	51.0	51.0	Based on studies of plant operation.
TKN		20.0	20.0	20.0	20.0	20.0	Based on studies of plant operation.
EFFLUENT CHARACTERISTICS							
- BOD5	- mg/L	169.0	169.0	169.0	169.0	169.0	
	- 1000 LB/DAY	69.3	69.3	69.3	69.3	69.3	
- SUSPENDED SOLIDS	- mg/L	99.5	99.5	99.5	99.5	99.5	

CITY OF TAMPA, FLORIDA
HOWARD F. CURREN ADVANCED WASTEWATER TREATMENT PLANT
BASES OF DESIGN - WASTEWATER

TABLE II-1

31-Aug-99

ITEMS		SERIES MODE		PARALLEL MODE			COMMENTS
		DAR STANDARD	DAR WITH DENITE	HPO 2-STAGE DAR STANDARD	HPO 2-STAGE DAR WITH DENITE	HPO 1-STEP & DAR WITH DENITE	
	- 1000 LB/DAY	40.8	40.8	40.8	40.8	40.8	
- NITROGEN as TKN	- mg/L	24.0	24.0	24.0	24.0	24.0	
	- 1000 LB/DAY	9.8	9.8	9.8	9.8	9.8	
- PHOSPHORUS	- mg/L	7.9	7.9	7.9	7.9	7.9	Based on 25% of phosphorus in particulate form.
	- 1000 LB/DAY	3.3	3.3	3.3	3.3	3.3	
PRIMARY SLUDGE							
QUANTITY	- 1000 LBS/DAY	42.5	42.5	42.5	42.5	42.5	
SOLIDS CONCENTRATION	- PERCENT	5.0	5.0	5.0	5.0	5.0	
VOLUME	- GPM	70.7	70.7	70.7	70.7	70.7	
VOLATILE SOLIDS	- PERCENT	79.4	79.4	79.4	79.4	79.4	Based on study of plant records.
QUANTITY VOLATILE SOLIDS	- 1000 LBS/DAY	33.7	33.7	33.7	33.7	33.7	
5 EAST PRIMARY SEDIMENTATION TANKS NO. 5-8							
INFLUENT FLOW	- MGD	46.8	46.8	46.8	46.8	46.8	Based on 48.75% of flow to west tanks; proportional to the surface area of the tanks.
INFLUENT CHARCTERISTICS							
- BOD5	- mg/L	264	264	264	264	264	
	- 1000 LB/DAY	103.0	103.0	103.0	103.0	103.0	
- SUSPENDED SOLIDS	- mg/L	203	203	203	203	203	
	- 1000 LB/DAY	83.3	83.3	83.3	83.3	83.3	
- NITROGEN as TKN	- mg/L	30	30	30	30	30	
	- 1000 LB/DAY	12.3	12.3	12.3	12.3	12.3	
- PHOSPHORUS	- mg/L	9	9	9	9	9	
	- 1000 LB/DAY	3.7	3.7	3.7	3.7	3.7	
PHYSICAL CHARACTERISTICS							
NUMBER OF AVAILABLE TANKS		4	4	4	4	4	
NUMBER OF OPERATING TANKS		4	4	4	4	4	
AVERAGE WATER DEPTH	- FT	13.1	13.1	13.1	13.1	13.1	
SURFACE AREA	- SF PER TANK	6308	6308	6308	6308	6308	
	- TOTAL SF	25232	25232	25232	25232	25232	
TOTAL VOLUME	- CF	330539	330539	330539	330539	330539	
	- MILLION GALLONS	2.47	2.47	2.47	2.47	2.47	
DETENTION TIME	- HR	1.3	1.3	1.3	1.3	1.3	
REMOVALS	- PERCENT						
BOD		36.0	36.0	36.0	36.0	36.0	Based on studies of plant operation.
TSS		51.0	51.0	51.0	51.0	51.0	Based on studies of plant operation.
TKN		20.0	20.0	20.0	20.0	20.0	Based on studies of plant operation.

CITY OF TAMPA, FLORIDA
HOWARD F. CURREN ADVANCED WASTEWATER TREATMENT PLANT
BASES OF DESIGN - WASTEWATER

TABLE II-1

31-Aug-99

ITEMS		SERIES MODE		PARALLEL MODE			COMMENTS
				HPO 2-STAGE		HPO 1-STEP	
		DAR STANDARD	DAR WITH DENITE	DAR STANDARD	DAR WITH DENITE	& DAR WITH DENITE	
EFFLUENT CHARACTERISTICS							
- BOD5	- mg/L	169.0	169.0	169.0	169.0	169.0	
	- 1000 LB/DAY	65.9	65.9	65.9	65.9	65.9	
- SUSPENDED SOLIDS	- mg/L	99.5	99.5	99.5	99.5	99.5	
	- 1000 LB/DAY	38.8	38.8	38.8	38.8	38.8	
- NITROGEN as TKN	- mg/L	24.0	24.0	24.0	24.0	24.0	
	- 1000 LB/DAY	9.4	9.4	9.4	9.4	9.4	
- PHOSPHORUS	- mg/L	7.9	7.9	7.9	7.9	7.9	Based on 25% of phosphorus in particulate form.
	- 1000 LB/DAY	3.1	3.1	3.1	3.1	3.1	
PRIMARY SLUDGE							
QUANTITY	- 1000 LBS/DAY	44.5	44.5	44.5	44.5	44.5	
SOLIDS CONCENTRATION	- PERCENT	5.0	5.0	5.0	5.0	5.0	
VOLUME	- GPM	74.1	74.1	74.1	74.1	74.1	
VOLATILE SOLIDS	- PERCENT	79.4	79.4	79.4	79.4	79.4	Based on study of plant records.
QUANTITY VOLATILE SOLIDS	- 1000 LBS/DAY	35.3	35.3	35.3	35.3	35.3	
6 TOTAL PRIMARY EFFLUENT							
PRIMARY EFFLUENT	- MGD	96.0	96.0	96.0	96.0	96.0	
CHARCTERISTICS							
- BOD5	- mg/L	169.0	169.0	169.0	169.0	169.0	
	- 1000 LB/DAY	135.3	135.3	135.3	135.3	135.3	
- SUSPENDED SOLIDS	- mg/L	99.5	99.5	99.5	99.5	99.5	
	- 1000 LB/DAY	79.6	79.6	79.6	79.6	79.6	
- NITROGEN as TKN	- mg/L	24.0	24.0	24.0	24.0	24.0	
	- 1000 LB/DAY	19.2	19.2	19.2	19.2	19.2	
- PHOSPHORUS	- mg/L	7.9	7.9	7.9	7.9	7.9	
	- 1000 LB/DAY	6.4	6.4	6.4	6.4	6.4	
7 RECYCLE FLOW							
FLOW RATE	- MGD	25.0	25.0	25.0	25.0	25.0	At 26% of the influent flow based on plant records.
CHARCTERISTICS							
- BOD5	- mg/L	9.1	9.1	9.1	9.1	9.1	Based on plant records.
	- 1000 LB/DAY	1.9	1.9	1.9	1.9	1.9	
- SUSPENDED SOLIDS	- mg/L	323.4	323.4	323.4	323.4	323.4	Based on plant records.
	- 1000 LB/DAY	67.3	67.3	67.3	67.3	67.3	
- NITROGEN as TKN	- mg/L	24.3	24.3	24.3	24.3	24.3	Based on plant records.
	- 1000 LB/DAY	5.1	5.1	5.1	5.1	5.1	

CITY OF TAMPA, FLORIDA
HOWARD F. CURREN ADVANCED WASTEWATER TREATMENT PLANT
BASES OF DESIGN - WASTEWATER

TABLE II-1

31-Aug-99

ITEMS		SERIES MODE		PARALLEL MODE			COMMENTS
				HPO 2-STAGE		HPO 1-STEP	
		DAR STANDARD	DAR WITH DENITE	DAR STANDARD	DAR WITH DENITE	& DAR WITH DENITE	
- PHOSPHORUS	- mg/L	NA	NA	NA	NA	NA	
	- 1000 LB/DAY	NA	NA	NA	NA	NA	
8 MAIN PUMPING STATION							
PRIMARY EFFLUENT & RECYCLE - MGD		121.0	121.0	121.0	121.0	121.0	
CHARCTERISTICS							
- BOD5	- mg/L	136.0	136.0	136.0	136.0	136.0	
	- 1000 LB/DAY	137.2	137.2	137.2	137.2	137.2	
- SUSPENDED SOLIDS	- mg/L	145.7	145.7	145.7	145.7	145.7	
	- 1000 LB/DAY	147.0	147.0	147.0	147.0	147.0	
- NITROGEN as TKN	- mg/L	24.1	24.1	24.1	24.1	24.1	
	- 1000 LB/DAY	24.3	24.3	24.3	24.3	24.3	
- PHOSPHORUS	- mg/L	6.3	6.3	6.3	6.3	6.3	
	- 1000 LB/DAY	6.4	6.4	6.4	6.4	6.4	
MAIN SEWAGE PUMPS							
VARIABLE SPEED PUMPS AT 40 MGD		3	3	3	3	3	
CONSTANT SPEED PUMPS AT 40 MGD		2	2	2	2	2	
VARIABLE SPEED PUMPS AT 50 MGD		2	2	2	2	2	
TOTAL INSTALLED CAPACITY - MGD		300	300	300	300	300	
FIRM CAPACITY - MGD		250	250	250	250	250	With largest unit out of service.
9 HIGH PURITY OXYGEN (HPO) REACTORS							
CARBONACEOUS REACTORS							
INFLUENT QUANTITIES	- MGD	121.0	121.0	88.2	88.2	88.2	Parallel: 70 mgd base flow plus recycle.
PEAK (mgd)		245.8	245.8	179.2	179.2	179.2	2.3 times plant influent plus recycle.
INFLUENT CHARCTERISTICS							
- BOD5	- mg/L	136.0	136.0	136.0	136.0	136.0	
	- 1000 LB/DAY	137.2	137.2	100.0	100.0	100.0	
- SUSPENDED SOLIDS	- mg/L	145.7	145.7	145.7	145.7	145.7	
	- 1000 LB/DAY	147.0	147.0	107.2	107.2	107.2	
- NITROGEN as TKN	- mg/L	24.1	24.1	24.1	24.1	24.1	
	- 1000 LB/DAY	24.3	24.3	17.7	17.7	17.7	
- PHOSPHORUS	- mg/L	7.9	7.9	7.9	7.9	7.9	
	- 1000 LB/DAY	8.0	8.0	5.8	5.8	5.8	
PHYSICAL CHARACTERISTICS							
NUMBER OF REACTORS - TOTAL		6	6	3	3	6	
NUMBER OF REACTORS - OPERATING		4	4	3	3	6	

CITY OF TAMPA, FLORIDA
HOWARD F. CURREN ADVANCED WASTEWATER TREATMENT PLANT
BASES OF DESIGN - WASTEWATER

TABLE II-1

31-Aug-99

ITEMS	SERIES MODE		PARALLEL MODE			COMMENTS
			HPO 2-STAGE		HPO 1-STEP	
	DAR STANDARD	DAR WITH DENITE	DAR STANDARD	DAR WITH DENITE	& DAR WITH DENITE	
NUMBER OF ZONES PER REACTOR	4	4	4	4	4	
VOLUME PER REACTOR - MG	1.27	1.27	1.27	1.27	1.27	
TOTAL REACTOR VOLUME - MG	7.62	7.62	3.81	3.81	7.62	
TOTAL OPERATING REACTOR VOLUME - MG	5.08	5.08	3.81	3.81	7.62	
BOD-a/1000 cf.	202	202	196	196	98	
DETENTION TIME - HRS	1.01	1.01	1.04	1.04	2.07	
SOLIDS RETENTION TIME, SRT - DAYS	0.8	0.8	0.8	0.8	2.5	
TOTAL SOLIDS PRODUCED						
- SOLIDS PRODUCED/TSS APPLIED	1.00	1.00	1.00	1.00	0.68	Based on historical plant records.
- TSS APPLIED - 1000 LBS/DAY	147.0	147.0	107.2	107.2	107.2	
- SOLIDS PRODUCED - 1000 LBS/DAY	147.0	147.0	107.2	107.2	72.9	
STEP FEED OPTION						
MIXED LIQUOR						
- AVERAGE MLSS - mg/l	2775	2775	2698	2698	2867	MLSSav = SP * SRT / (VOL. * 8.34)
- LAST PASS MLSS - mg/l	1441	1441	1401	1401	1488	MLSS(LP) = 4*MLSSav/(3+(R+1)/R)
RETURN SLUDGE						
- RETURN RATIO	0.27	0.27	0.27	0.27	0.27	Input value to acheive RAS = 8,000
- RETURN CONCENTRATION (mg/L)	6777	6777	6589	6589	7001	((R+1)/R) * MLSS(LP)
- RETURN FLOW - MGD	32.7	32.7	23.8	23.8	23.8	Ratio * influent flow.
WASTE ACTIVATED SLUDGE						
- SOLIDS PRODUCED - 1000 LBS/DAY	147.0	147.0	107.2	107.2	72.9	
- EFFLUENT SUSPENDED SOLIDS - 1000 LBS/DAY	16.1	16.1	11.8	11.8	8.0	
- CONCENTRATION OF WAS - mg/l	6777	6777	6589	6589	7001	
- QUANTITY - 1000 LBS/DAY	130.8	130.8	95.4	95.4	64.9	SP - Effl. TSS
- VOLUME - MGD	2.31	2.31	1.74	1.74	1.11	
- GPM	1607	1607	1205	1205	771	
PLUG FLOW OPTION						
MIXED LIQUOR						
- AVERAGE MLSS - mg/l	2775	2775	2698	2698	2867	MLSSav = SP * SRT / (VOL. * 8.34)
- LAST PASS MLSS - mg/l	2775	2775	2698	2698	2867	
RETURN SLUDGE						
- RETURN RATIO	0.54	0.54	0.52	0.52	0.56	Input value to acheive RAS = 8,000
- RETURN CONCENTRATION (mg/L)	7914	7914	7886	7886	7985	((R+1)/R) * MLSS(LP)

CITY OF TAMPA, FLORIDA
HOWARD F. CURREN ADVANCED WASTEWATER TREATMENT PLANT
BASES OF DESIGN - WASTEWATER

TABLE II-1

31-Aug-99

ITEMS	SERIES MODE		PARALLEL MODE			COMMENTS
			HPO 2-STAGE		HPO 1-STEP	
	DAR STANDARD	DAR WITH DENITE	DAR STANDARD	DAR WITH DENITE	& DAR WITH DENITE	
- RETURN FLOW - MGD	65.3	65.3	45.9	45.9	49.4	Ratio * influent flow.
WASTE ACTIVATED SLUDGE						
- SOLIDS PRODUCED - 1000 LBS/DAY	147.0	147.0	107.2	107.2	72.9	
- EFFLUENT SUSPENDED SOLIDS - 1000 LBS/DAY	16.1	16.1	11.8	11.8	8.0	
- CONCENTRATION OF WAS - mg/l	7914	7914	7886	7886	7985	
- QUANTITY - 1000 LBS/DAY	130.8	130.8	95.4	95.4	64.9	SP - Effl. TSS
- VOLUME - MGD	1.98	1.98	1.45	1.45	0.97	
- GPM	1376	1376	1007	1007	676	
HIGH PURITY OXYGEN DEMAND						
- BOD APPLIED - 1000 LBS/DAY	137.2	137.2	100.0	100.0	100.0	
- TKN OXIDIZED - 1000 LBS/DAY	4.4	4.4	3.2	3.2	11.8	Infl. TKN - Effl TKN - 7% in sludge.
- DISSOVLED OXYGEN - 1000 LBS/DAY	7.1	7.1	5.1	5.1	5.1	Flow * 7.0 mg/l * 8.34 / 1000
- O2 FOR BOD APPLIED - 1000 LBS/DAY	137.2	137.2	100.0	100.0	100.0	Based on 1 lb O2 per lb BOD.
- O2 FOR TKN - 1000 LBS/DAY	20.4	20.4	14.9	14.9	54.1	At 4.6 * TKN oxidized.
- O2 DISSOLVED IN W - 1000 LBS/DAY	7.1	7.1	5.1	5.1	5.1	At 7.0 mg/l.
- TOTAL O2 - 1000 LBS/DAY	164.6	164.6	120.0	120.0	159.3	
10 HPO FINAL SEDIMENTATION TANKS						
CARBONACEOUS TANKS						
INFLUENT QUANTITIES (mgd)	121.0	121.0	88.2	88.2	88.2	
PEAK (mgd)	245.8	245.8	179.2	179.2	179.2	
STEP FEED OPTION						
NUMBER OF TANKS - TOTAL	12	12	6	6	12	
NUMBER OF TANKS - OPERATING	10	10	6	6	12	
SURFACE AREA PER TANK - SF	16796	16796	16796	16796	16796	
SURFACE AREA OF OPERATING TANKS - SF	167960	167960	100776	100776	201552	
SURFACE OVERFLOW RATE - GPD/SF	720	720	875	875	438	
PEAK - GPD/SF	1463	1463	1778	1778	889	
SAFETY FACTOR a b						
- ISV - FT/HR 23 700	8.39	8.39	8.63	8.63	6.99	a * exp(-b * 10^-6 * MLSS) [use b=800 for nitrification
- SOR BASED ON ISV - GPD/SF	1505	1505	1548	1548	1255	ISV * 179.44
- CLARIFIER SAFETY FACTOR	2.09	2.09	1.77	1.77	2.87	SOR(Based on ISV) / Actual SOR
PLUG FLOW OPTION						
NUMBER OF TANKS - TOTAL	12	12	6	6	12	
NUMBER OF TANKS - OPERATING	12	12	6	6	12	
SURFACE AREA PER TANK - SF	16796	16796	16796	16796	16796	
SURFACE AREA OF OPERATING TANKS - SF	201552	201552	100776	100776	201552	

CITY OF TAMPA, FLORIDA
HOWARD F. CURREN ADVANCED WASTEWATER TREATMENT PLANT
BASES OF DESIGN - WASTEWATER

TABLE II-1

31-Aug-99

ITEMS			SERIES MODE		PARALLEL MODE			COMMENTS
			DAR STANDARD	DAR WITH DENITE	HPO 2-STAGE DAR STANDARD	HPO 2-STAGE DAR WITH DENITE	HPO 1-STEP & DAR WITH DENITE	
SURFACE OVERFLOW RATE - GPD/SF			600	600	875	875	438	
PEAK	- GPD/SF		1219	1219	1778	1778	889	
SAFETY FACTOR	a	b						
- ISV - FT/HR	23	700	3.30	3.30	3.48	3.48	3.09	a * exp(-b * 10^-6 * MLSS) [use b=800 for nitrification
- SOR BASED ON ISV - GPD/SF			592	592	624	624	555	ISV * 179.44
- CLARIFIER SAFETY FACTOR			0.99	0.99	0.71	0.71	1.27	SOR(Based on ISV) / Actual SOR
Note: The above suggests that the step feed option should be more reliable once flows to the plant are at design levels.								
FINAL TANK EFFLUENT CHARACTERISTICS								
- BOD5	- mg/L		27.0	27.0	27.0	27.0	5.0	Based on median from historical records.
	- 1000 LB/DAY		27.2	27.2	19.9	19.9	3.7	
- SUSPENDED SOLIDS	- mg/L		16.0	16.0	16.0	16.0	10.9	Based on median from historical records.
	- 1000 LB/DAY		16.1	16.1	11.8	11.8	8.0	
- PERCENT TKN REMOVAL			56.0	56.0	56.0	56.0		Based on average of historical records.
- NITROGEN as TKN	- mg/L		10.6	10.6	10.6	10.6	1.9	
	- 1000 LB/DAY		10.7	10.7	7.8	7.8	1.4	
-NO3-N	- mg/L		4.4	4.4	4.4	4.4	16.0	
	- 1000 LB/DAY		4.4	4.4	3.2	3.2	11.8	Infl. TKN - Effl TKN - 7% in sludge.
- PERCENT PHOSPHORUS REMOVED			16.3	16.3	16.3	16.3	16.3	Based on 1% of TSS removed.
- PHOSPHORUS	- mg/L		6.6	6.6	6.6	6.6	6.6	
	- 1000 LB/DAY		6.7	6.7	4.9	4.9	4.9	
11 HIGH PURITY OXYGEN (HPO) REACTORS								
NITRIFICATION REACTORS								
INFLUENT QUANTITIES	- MGD		na	na	88.2	88.2	na	Parallel: 70 mgd base flow plus recycle.
PEAK (mgd)			na	na	179.2	179.2	na	
INFLUENT CHARCTERISTICS								
- BOD5	- mg/L		na	na	27.0	27.0	na	
	- 1000 LB/DAY		na	na	19.9	19.9	na	
- SUSPENDED SOLIDS	- mg/L		na	na	16.0	16.0	na	
	- 1000 LB/DAY		na	na	11.8	11.8	na	
- NITROGEN as TKN	- mg/L		na	na	10.6	10.6	na	
	- 1000 LB/DAY		na	na	7.8	7.8	na	
- PHOSPHORUS	- mg/L		na	na	6.6	6.6	na	
	- 1000 LB/DAY		na	na	4.9	4.9	na	
PHYSICAL CHARACTERISTICS								
NUMBER OF REACTORS - TOTAL			na	na	3	3	na	
NUMBER OF REACTORS - OPERATING			na	na	3	3	na	
NUMBER OF ZONES PER REACTOR			na	na	4	4	na	

CITY OF TAMPA, FLORIDA
HOWARD F. CURREN ADVANCED WASTEWATER TREATMENT PLANT
BASES OF DESIGN - WASTEWATER

TABLE II-1

31-Aug-99

ITEMS	SERIES MODE		PARALLEL MODE			COMMENTS
			HPO 2-STAGE		HPO 1-STEP	
	DAR STANDARD	DAR WITH DENITE	DAR STANDARD	DAR WITH DENITE	& DAR WITH DENITE	
VOLUME PER REACTOR - MG	na	na	1.27	1.27	na	
TOTAL REACTOR VOLUME - MG	na	na	3.81	3.81	na	
TOTAL OPERATING REACTOR VOLUME - MG	na	na	3.81	3.81	na	
BOD-a/1000 cf.	na	na	39	39	na	
DETENTION TIME - HRS	na	na	1.04	1.04	na	
SOLIDS RETENTION TIME, SRT - DAYS	na	na	8.0	8.0	na	
TOTAL SOLIDS PRODUCED						
- SOLIDS PRODUCED/TSS APPLIED	na	na	0.68	0.68	na	Based on historical plant records.
- TSS APPLIED - 1000 LBS/DAY	na	na	11.8	11.8	na	
- SOLIDS PRODUCED - 1000 LBS/DAY	na	na	8.0	8.0	na	
STEP FEED OPTION						
MIXED LIQUOR						
- AVERAGE MLSS - mg/l	na	na	2015	2015	na	MLSSav = SP * SRT / (VOL. * 8.34)
- LAST PASS MLSS - mg/l	na	na	965	965	na	MLSS(LP) = 4*MLSSav/(3+(R+1)/R)
RETURN SLUDGE						
- RETURN RATIO	na	na	0.23	0.23	na	Input value to acheive RAS = 8,000
- RETURN CONCENTRATION (mg/L)	na	na	5163	5163	na	((R+1)/R) * MLSS(LP)
- RETURN FLOW - MGD	na	na	20.3	20.3	na	Ratio * influent flow.
WASTE ACTIVATED SLUDGE						
- SOLIDS PRODUCED - 1000 LBS/DAY	na	na	8.0	8.0	na	
- EFFLUENT SUSPENDED SOLIDS - 1000 LBS/DAY	na	na	8.0	8.0	na	
- CONCENTRATION OF WAS - mg/l	na	na	5163	5163	na	
- QUANTITY - 1000 LBS/DAY			-0.0	-0.0		SP - Effl. TSS
- VOLUME - MGD			-0.00	-0.00		
- GPM			-0	-0		
PLUG FLOW OPTION						
MIXED LIQUOR						
- AVERAGE MLSS - mg/l	na	na	2015	2015	na	MLSSav = SP * SRT / (VOL. * 8.34)
- LAST PASS MLSS - mg/l	na	na	2015	2015	na	
RETURN SLUDGE						
- RETURN RATIO	na	na	0.34	0.34	na	Input value to acheive RAS = 8,000
- RETURN CONCENTRATION (mg/L)	na	na	7941	7941	na	((R+1)/R) * MLSS(LP)
- RETURN FLOW - MGD	na	na	30.0	30.0	na	Ratio * influent flow.

CITY OF TAMPA, FLORIDA
HOWARD F. CURREN ADVANCED WASTEWATER TREATMENT PLANT
BASES OF DESIGN - WASTEWATER

TABLE II-1

31-Aug-99

ITEMS	SERIES MODE		PARALLEL MODE			COMMENTS
			HPO 2-STAGE		HPO 1-STEP	
	DAR STANDARD	DAR WITH DENITE	DAR STANDARD	DAR WITH DENITE	& DAR WITH DENITE	
WASTE ACTIVATED SLUDGE						
- SOLIDS PRODUCED - 1000 LBS/DAY	na	na	8.0	8.0	na	
- EFFLUENT SUSPENDED SOLIDS - 1000 LBS/DAY	na	na	8.0	8.0	na	
- CONCENTRATION OF WAS - mg/l	na	na	7941	7941	na	
- QUANTITY - 1000 LBS/DAY			-0.0	-0.0		SP - Effl. TSS
- VOLUME - MGD			-0.00	-0.00		
- GPM			-0	-0		
HIGH PURITY OXYGEN DEMAND						
- BOD APPLIED - 1000 LBS/DAY	na	na	19.9	19.9	na	
- TKN OXIDIZED - 1000 LBS/DAY	na	na	6.4	6.4	na	Infl. TKN - Effl TKN - 7% in sludge.
- DISSOVLED OXYGEN - 1000 LBS/DAY	na	na	5.1	5.1	na	Flow * 7.0 mg/l * 8.34 / 1000
- O2 FOR BOD APPLIED - 1000 LBS/DAY	na	na	23.8	23.8	na	Based on 1.2 lb O2 per lb BOD.
- O2 FOR TKN - 1000 LBS/DAY	na	na	29.4	29.4	na	At 4.6 * TKN oxidized.
- O2 DISSOLVED IN W - 1000 LBS/DAY	na	na	5.1	5.1	na	At 7.0 mg/l.
- TOTAL O2 - 1000 LBS/DAY	na	na	58.4	58.4	na	
12 HPO FINAL SEDIMENTATION TANKS						
NITRIFICATION TANKS						
INFLUENT QUANTITIES (mgd)			88.2	88.2		
PEAK (mgd)			179.2	179.2		
STEP FEED OPTION						
NUMBER OF TANKS - TOTAL	na	na	6	6	na	
NUMBER OF TANKS - OPERATING	na	na	6	6	na	
SURFACE AREA PER TANK - SF	na	na	16796	16796	na	
SURFACE AREA OF OPERATING TANKS - SF	na	na	100776	100776	na	
SURFACE OVERFLOW RATE - GPD/SF	na	na	875	875	na	
PEAK - GPD/SF	na	na	1778	1778	na	
SAFETY FACTOR a b						
- ISV - FT/HR 23 800	na	na	10.62	10.62	na	a * exp(-b * 10^-6 * MLSS) [use b=800 for nitrification
- SOR BASED ON ISV - GPD/SF	na	na	1906	1906	na	ISV * 179.44
- CLARIFIER SAFETY FACTOR	na	na	2.18	2.18	na	SOR(Based on ISV) / Actual SOR
PLUG FLOW OPTION						
NUMBER OF TANKS - TOTAL	na	na	6	6	na	
NUMBER OF TANKS - OPERATING	na	na	6	6	na	
SURFACE AREA PER TANK - SF	na	na	16796	16796	na	
SURFACE AREA OF OPERATING TANKS - SF	na	na	100776	100776	na	
SURFACE OVERFLOW RATE - GPD/SF	na	na	875	875	na	

CITY OF TAMPA, FLORIDA
HOWARD F. CURREN ADVANCED WASTEWATER TREATMENT PLANT
BASES OF DESIGN - WASTEWATER

TABLE II-1

31-Aug-99

ITEMS		SERIES MODE		PARALLEL MODE			COMMENTS
		DAR STANDARD	DAR WITH DENITE	HPO 2-STAGE DAR STANDARD	HPO 2-STAGE DAR WITH DENITE	HPO 1-STEP & DAR WITH DENITE	
PEAK	- GPD/SF	na	na	1778	1778	na	
SAFETY FACTOR	a b						
- ISV - FT/HR	23 800	na	na	4.59	4.59	na	a * exp(-b * 10^-6 * MLSS) [use b=800 for nitrification
- SOR BASED ON ISV - GPD/SF		na	na	823	823	na	ISV * 179.44
- CLARIFIER SAFETY FACTOR		na	na	0.94	0.94	na	SOR(Based on ISV) / Actual SOR
Note: The above suggests that the step feed option should be more reliable once flows to the plant are at design levels.							
FINAL TANK EFFLUENT CHARACTERISTICS							
- BOD5	- mg/L	na	na	5.0	5.0	na	Based on median from historical records.
	- 1000 LB/DAY	na	na	3.7	3.7	na	
- SUSPENDED SOLIDS	- mg/L	na	na	10.9	10.9	na	Based on median from historical records.
	- 1000 LB/DAY	na	na	8.0	8.0	na	
- PERCENT TKN REMOVAL		na	na	82.0	82.0	na	Based on average of historical records.
- NITROGEN as TKN	- mg/L	na	na	1.9	1.9	na	
	- 1000 LB/DAY	na	na	1.4	1.4	na	
-NO3-N	- mg/L	na	na	12.1	12.1	na	
	- 1000 LB/DAY	na	na	8.9	8.9	na	Infl. TKN - Effl TKN - 7% in sludge.
- PHOSPHORUS	- mg/L	na	na	6.6	6.6	na	
	- 1000 LB/DAY	na	na	4.9	4.9	na	
13 DIFFUSED AIR REACTORS (DAR's)							
INFLUENT QUANTITIES	- MGD	121.0	121.0	32.8	32.8	32.8	Based on 26 mgd plant flow plus recycle.
PEAK (mgd)		245.8	245.8	66.6	66.6	66.6	Based on 2.3 times average plus recycle.
INFLUENT CHARCTERISTICS							
- BOD5	- mg/L	27.0	27.0	136.0	136.0	136.0	
	- 1000 LB/DAY	27.2	27.2	37.2	37.2	37.2	
- SUSPENDED SOLIDS	- mg/L	16.0	16.0	145.7	145.7	145.7	
	- 1000 LB/DAY	16.1	16.1	39.8	39.8	39.8	
- NITROGEN as TKN	- mg/L	10.6	10.6	24.1	24.1	24.1	
	- 1000 LB/DAY	10.7	10.7	6.6	6.6	6.6	
-NO3-N	- mg/L	4.4	4.4	0.0	0.0	0.0	
	- 1000 LB/DAY	4.4	4.4	0.0	0.0	0.0	
- PHOSPHORUS	- mg/L	6.6	6.6	6.3	6.3	6.3	
	- 1000 LB/DAY	6.7	6.7	1.7	1.7	1.7	
PHYSICAL CHARACTERISTICS							
NUMBER OF REACTORS - TOTAL		4	4	4	4	4	
NUMBER OF REACTORS - OPERATING		4	4	4	4	4	
NUMBER OF ZONES PER REACTOR		6	6	6	6	6	

CITY OF TAMPA, FLORIDA
HOWARD F. CURREN ADVANCED WASTEWATER TREATMENT PLANT
BASES OF DESIGN - WASTEWATER

TABLE II-1

31-Aug-99

ITEMS	SERIES MODE		PARALLEL MODE			COMMENTS
			HPO 2-STAGE		HPO 1-STEP	
	DAR STANDARD	DAR WITH DENITE	DAR STANDARD	DAR WITH DENITE	& DAR WITH DENITE	
- FOR AERATION	6	4	6	4	4	
- FOR DENITRIFICATION	0	2	0	2	2	
VOLUME PER REACTOR - MG	2.12	2.12	2.12	2.12	2.12	
TOTAL REACTOR VOLUME - MG	8.48	8.48	8.48	8.48	8.48	
TOTAL OPERATING REACTOR VOLUME - MG	8.48	8.48	8.48	8.48	8.48	
TOTAL OPERATING AERATED VOLUME - MG	8.48	5.65	8.48	5.65	5.65	
BOD-a/1000 cf.	24	36	33	49	49	
DETENTION TIME - HRS	1.68	1.68	6.21	6.21	6.21	
SOLIDS RETENTION TIME, SRT - DAYS	8.0	8.0	8.0	8.0	8.0	Selected based on requirement for complete nitrificatio
TOTAL SOLIDS PRODUCED						
- SOLIDS PRODUCED/TSS APPLIED	0.68	0.68	na	na	na	Based on historical plant records.
- SOLIDS PRODUCED/BOD APPLIED	na	na	0.58	0.58	0.58	Based on 0.74-(0.02*SRT) for diffused air.
- TSS APPLIED - 1000 LBS/DAY	16.1	16.1	na	na	na	
- BOD APPLIED - 1000 LBS/DAY	na	na	37.2	37.2	37.2	
- SOLIDS PRODUCED - 1000 LBS/DAY	11.0	11.0	21.5	21.5	21.5	
STEP FEED MODE						
MIXED LIQUOR						
- AVERAGE MLSS - mg/l	1242	1862	2437	3656	3656	MLSSav = SP * SRT / (VOL. * 8.34)
- LAST PASS MLSS - mg/l	618	740	1914	2593	2593	MLSS(LP) = 6*MLSSav/(5+(R+1)/R) [for 6 aerated zone MLSS(LP) = 4*MLSSav/(3+(R+1)/R) [for 4 aerated zone
RETURN SLUDGE						
- RETURN RATIO	0.17	0.17	0.61	0.61	0.61	Input value to acheive RAS = 8,000
- RETURN CONCENTRATION (mg/L)	4361	5228	5053	6844	6844	((R+1)/R) * MLSS(LP)
- RETURN FLOW - MGD	20.0	20.0	20.0	20.0	20.0	Ratio * influent flow. (20 mgd, minimum)
WASTE ACTIVATED SLUDGE						
- SOLIDS PRODUCED - 1000 LBS/DAY	11.0	11.0	21.5	21.5	21.5	
- EFFLUENT SUSPENDED SOLIDS - 1000 LBS/DAY	11.0	11.0	3.0	3.0	3.0	
- CONCENTRATION OF WAS - mg/l	4361	5228	5053	6844	6844	
- QUANTITY - 1000 LBS/DAY	0.0	0.0	18.6	18.6	18.6	SP - Effl. TSS
- VOLUME - MGD	0.00	0.00	0.44	0.33	0.33	
- GPM	0	0	306	226	226	
PLUG FLOW MODE						
MIXED LIQUOR						
- AVERAGE MLSS - mg/l	1242	1862	2437	3656	3656	MLSSav = SP * SRT / (VOL. * 8.34)

CITY OF TAMPA, FLORIDA
HOWARD F. CURREN ADVANCED WASTEWATER TREATMENT PLANT
BASES OF DESIGN - WASTEWATER

TABLE II-1

31-Aug-99

ITEMS	SERIES MODE		PARALLEL MODE			COMMENTS
			HPO 2-STAGE		HPO 1-STEP	
	DAR STANDARD	DAR WITH DENITE	DAR STANDARD	DAR WITH DENITE	& DAR WITH DENITE	
- LAST PASS MLSS - mg/l	1242	1862	2437	3656	3656	
RETURN SLUDGE						
- RETURN RATIO	0.19	0.30	0.61	0.84	0.84	Input value to acheive RAS = 8,000
- RETURN CONCENTRATION (mg/L)	7776	8070	6433	8008	8008	((R+1)/R) * MLSS(LP)
- RETURN FLOW - MGD	23.0	36.3	20.0	27.5	27.5	Ratio * influent flow. (20 mgd, minimum)
WASTE ACTIVATED SLUDGE						
- SOLIDS PRODUCED - 1000 LBS/DAY	11.0	11.0	21.5	21.5	21.5	
- EFFLUENT SUSPENDED SOLIDS - 1000 LBS/DAY	11.0	11.0	3.0	3.0	3.0	
- CONCENTRATION OF WAS - mg/l	7776	8070	6433	8008	8008	
- QUANTITY - 1000 LBS/DAY	0.0	0.0	18.6	18.6	18.6	SP - Effl. TSS
- VOLUME - MGD	0.00	0.00	0.35	0.28	0.28	
- GPM	0	0	240	193	193	
ANOXIC STAGE DENITRIFICATION						
- TKN INFLUENT - mg/l	10.6	10.6	24.1	24.1	24.1	
- 1000 LBS/DAY	10.7	10.7	6.6	6.6	6.6	
- NO3-N INFLUENT - mg/l	4.4	4.4	0.0	0.0	0.0	
- 1000 LBS/DAY	4.4	4.4	0.0	0.0	0.0	
- TN IN SOLIDS REMOVED - 1000 LBS/DAY	0.0	0.0	1.3	1.3	1.3	Based on 7% nitrogen in solids removed.
- TKN EFFLUENT - mg/l	1.9	1.9	1.9	1.9	1.9	Based on calculation shown for effluent.
- 1000 LBS/DAY	1.9	1.9	0.5	0.5	0.5	
- NO3-N FORMED - 1000 LBS/DAY	13.2	13.2	4.7	4.7	4.7	TKNin + NO3-N in - TKN in solids - TKN effluent
- mg/l	11.0	10.1	10.8	4.2	4.2	Based on total influent flow, recycle flow and RAS flow.
- CALCULATION OF F:M RATIO						
* BOD APPLIED - 1000 LBS/DAY	na	27.2	na	37.2	37.2	
* MLSS - mg/l	na	1862	na	2593	2593	Plug flow MLSS: Series; Step feed MLSS: Parallel.
* MLVSS (@75%) - mg/l	na	1397	na	1945	1945	
* AERATED VOL. LESS REAERATION - MG	na	5.65	na	4.24	4.24	
* "MICROORGANISMS - 1000 LBS	na	65.9	na	68.8	68.8	
* F:M RATIO - LB-BOD/DAY/LB MLVSS	na	0.41	na	0.54	0.54	
- DENITRIFICATION RATE - LB NO3-N/LB MLSS/DA	na	0.210	na	0.060	0.060	For methanol system use 0.21; other: (0.03(F:M) + 0.02
- ANOXIC STAGE VOLUME - MG	na	2.83	na	2.83	2.83	
- MLSS IN ANOXIC ZON - 1000 LBS	na	43.9	na	61.1	61.1	
- NO3-N REMOVED - 1000 LBS/DAY	na	9.22	na	3.68	3.68	
- O2 DEBIT - 1000 LBS/DAY	na	0.71	na	0.12	0.12	Based on 2 mg/l in infl. flow: series; in RAS flow: parall
- NET NO3-N REMOVED - 1000 LBS/DAY	na	8.51	na	3.56	3.56	
- EFFLUENT NO3-N - 1000 LBS/DAY	13.19	4.68	4.75	1.19	1.19	

CITY OF TAMPA, FLORIDA
HOWARD F. CURREN ADVANCED WASTEWATER TREATMENT PLANT
BASES OF DESIGN - WASTEWATER

TABLE II-1

31-Aug-99

ITEMS	SERIES MODE		PARALLEL MODE			COMMENTS
			HPO 2-STAGE		HPO 1-STEP	
	DAR STANDARD	DAR WITH DENITE	DAR STANDARD	DAR WITH DENITE	& DAR WITH DENITE	
- mg/l	13.08	4.64	17.38	4.35	4.35	
- RECYCLE REQUIRED - MGD	na	na	na	101.2	101.2	
- RETURN SLUDGE - MGD	na	na	na	20.0	20.0	
- MIXED LIQUOR RECYCLE REQUIRED - MGD	na	na	na	81.2	81.2	
- METHANOL FEED RATE - 1000 LBS/DAY	na	25.5	na	na	na	Based on 3 LBS methanol per LB NO3-N.
- GAL/DAY	na	3852	na	na	na	At 6.63 LBS/GAL.
DIFFUSED AIR OXYGEN DEMAND						
- BOD APPLIED - 1000 LBS/DAY	27.2	27.2	37.2	37.2	37.2	
- TKN OXIDIZED - 1000 LBS/DAY	8.8	8.8	4.7	4.7	4.7	Infl. TKN - Effl TKN - 7% in sludge- Infl. NO3.
- DISSOVLED OXYGEN - 1000 LBS/DAY	4.0	4.0	1.1	1.1	1.1	Flow * 4.0 mg/l * 8.34 / 1000
- O2 FOR BOD APPLIED - 1000 LBS/DAY	32.7	32.7	44.6	44.6	44.6	Based on 1.2 lb O2 per lb BOD.
- O2 FOR TKN - 1000 LBS/DAY	40.3	40.3	21.8	21.8	21.8	At 4.6 * TKN oxidized.
- O2 DISSOLVED IN W - 1000 LBS/DAY	4.0	4.0	1.1	1.1	1.1	At 4.0 mg/l.
- CREDIT FOR NO3 - 1000 LBS/DAY	na	na	0.0	10.2	10.2	At 2.86 LB O2 / LB NO3-N removed.
- TOTAL O2 - 1000 LBS/DAY	77.0	77.0	67.5	57.3	57.3	
14 DAR FINAL SEDIMENTATION TANKS						
INFLUENT QUANTITIES (mgd)	121.0	121.0	32.8	32.8	32.8	
PEAK (mgd)	245.8	245.8	66.6	66.6	66.6	
STEP FEED MODE						
NUMBER OF TANKS - TOTAL	8	8	8	8	8	
NUMBER OF TANKS - OPERATING	8	8	8	8	8	
SURFACE AREA PER TANK - SF	16796	16796	16796	16796	16796	
SURFACE AREA OF OPERATING TANKS - SF	134368	134368	134368	134368	134368	
SURFACE OVERFLOW RATE - GPD/SF	900	900	244	244	244	
PEAK - GPD/SF	1829	1829	495	495	495	
SAFETY FACTOR a b						
- ISV - FT/HR 23 800	14.03	12.72	4.97	2.89	2.89	a * exp(-b * 10^-6 * MLSS)
- SOR BASED ON ISV - GPD/SF	2518	2282	892	518	518	ISV * 179.44
- CLARIFIER SAFETY FACTOR	2.80	2.54	3.66	2.13	2.13	SOR(Based on ISV) / Actual SOR
PLUG FLOW MODE						
NUMBER OF TANKS - TOTAL	8	8	8	8	8	
NUMBER OF TANKS - OPERATING	8	8	8	8	8	
SURFACE AREA PER TANK - SF	16796	16796	16796	16796	16796	
SURFACE AREA OF OPERATING TANKS - SF	134368	134368	134368	134368	134368	
SURFACE OVERFLOW RATE - GPD/SF	900	900	244	244	244	

CITY OF TAMPA, FLORIDA
HOWARD F. CURREN ADVANCED WASTEWATER TREATMENT PLANT
BASES OF DESIGN - WASTEWATER

TABLE II-1

31-Aug-99

ITEMS		SERIES MODE		PARALLEL MODE			COMMENTS
				HPO 2-STAGE		HPO 1-STEP	
		DAR STANDARD	DAR WITH DENITE	DAR STANDARD	DAR WITH DENITE	& DAR WITH DENITE	
PEAK	- GPD/SF	1829	1829	495	495	495	
SAFETY FACTOR	a b						
- ISV - FT/HR	23 800	8.52	5.18	3.27	1.23	1.23	a * exp(-b * 10^-6 * MLSS)
- SOR BASED ON ISV - GPD/SF		1529	930	587	222	222	ISV * 179.44
- CLARIFIER SAFETY FACTOR		1.70	1.03	2.41	0.91	0.91	SOR(Based on ISV) / Actual SOR
Note: The above suggests that the step feed option should be more reliable once flows to the plant are at design levels.							
FINAL TANK EFFLUENT CHARACTERISTICS							
- BOD5	- mg/L	5.0	5.0	5.0	5.0	5.0	Based on median from historical records.
	- 1000 LB/DAY	5.0	5.0	1.4	1.4	1.4	
- SUSPENDED SOLIDS	- mg/L	10.9	10.9	10.9	10.9	10.9	
	- 1000 LB/DAY	11.0	11.0	3.0	3.0	3.0	Based on solids produced.
- PERCENT TKN REMOVAL		82.0	82.0	92.0	92.0	92.0	Based on average of historical records.
- NITROGEN as TKN	- mg/L	1.9	1.9	1.9	1.9	1.9	
	- 1000 LB/DAY	1.9	1.9	0.5	0.5	0.5	
-NO3-N	- mg/L	13.1	4.6	17.4	4.4	4.4	From removal calculations above.
	- 1000 LB/DAY	13.2	4.7	4.7	1.2	1.2	
- PHOSPHORUS	- mg/L	6.6	6.6	6.3	6.3	6.3	Same as nitrification influent.
	- 1000 LB/DAY	6.7	6.7	1.7	1.7	1.7	
15 DENTRIFICATION FILTERS							
INFLUENT QUANTITIES	- MGD	121.0	121.0	121.0	121.0	121.0	
PEAK (mgd)		245.8	245.8	245.8	245.8	66.6	
INFLUENT CHARCTERISTICS							
- BOD5	- mg/L	5.0	5.0	5.0	5.0	5.0	
	- 1000 LB/DAY	5.0	5.0	5.0	5.0	5.0	
- SUSPENDED SOLIDS	- mg/L	10.9	10.9	10.9	10.9	10.9	
	- 1000 LB/DAY	11.0	11.0	11.0	11.0	11.0	
- NITROGEN as TKN	- mg/L	1.9	1.9	1.9	1.9	1.9	
	- 1000 LB/DAY	1.9	1.9	1.9	1.9	1.9	
- NO3-N	- mg/L	13.1	4.6	13.5	10.0	12.8	
	- 1000 LB/DAY	13.2	4.7	13.6	10.1	13.0	
- PHOSPHORUS	- mg/L	6.6	6.6	6.5	6.5	6.5	
	- 1000 LB/DAY	6.7	6.7	6.6	6.6	6.6	
PHYSICAL CHARACTERISTICS							
NUMBER OF FILTERS		32	32	32	32	32	
LENGTH OF EACH FILTER - FT		105	105	105	105	105	
WIDTH OF EACH FILTER - FT		10	10	10	10	10	

CITY OF TAMPA, FLORIDA
HOWARD F. CURREN ADVANCED WASTEWATER TREATMENT PLANT
BASES OF DESIGN - WASTEWATER

TABLE II-1

31-Aug-99

ITEMS	SERIES MODE		PARALLEL MODE			COMMENTS
			HPO 2-STAGE		HPO 1-STEP	
	DAR STANDARD	DAR WITH DENITE	DAR STANDARD	DAR WITH DENITE	& DAR WITH DENITE	
SURFACE AREA PER FILTER - SF	1050	1050	1050	1050	1050	
TOTAL SURFACE AREA - SF	33600	33600	33600	33600	33600	
MEDIA DEPTH - FT	5.5	5.5	5.5	5.5	5.5	
HYDRAULIC LOADING - GPM/SF						
AVERAGE	2.50	2.50	2.50	2.50	2.50	
PEAK	5.08	5.08	5.08	5.08	1.38	
METHANOL FEED RATE - 1000 LBS/DAY	39.6	14.0	40.9	30.3	38.9	Based on 3 LBS methanol per LB NO3-N.
- GAL/DAY	5969	2117	6176	4566	5861	At 6.63 LBS/GAL.
EFFLUENT CHARCTERISTICS						
- BOD5 - mg/L	2.0	2.0	2.0	2.0	2.0	Based on plant records.
- SUSPENDED SOLIDS - mg/L	2.3	2.3	2.3	2.3	2.3	
- NITROGEN as TKN - mg/L	1.5	1.5	1.5	1.5	1.5	
- NO3-N - mg/L	1.0	1.0	1.0	1.0	1.0	
- PHOSPHORUS - mg/L	5.0	5.0	5.0	5.0	5.0	
16 POST-AERATION CHLORINATION TANKS						
INFLUENT QUANTITIES - MGD	96.0	96.0	96.0	96.0	96.0	Plant influent basis, recycles removed.
PEAK (mgd)	220.8	220.8	220.8	220.8	220.8	Plant influent basis, recycles removed.
PHYSICAL CHARACTERISTICS						
NUMBER OF TANKS	3	3	3	3	3	
AVERAGE WATER DEPTH - FT	10.0	10.0	10.0	10.0	10.0	
TANK VOLUME - MG						
EACH	0.79	0.79	0.79	0.79	0.79	
TOTAL	2.38	2.38	2.38	2.38	2.38	
CHLORINE CONTACT TIME - MIN						
AVERAGE	36	36	36	36	36	
PEAK	16	16	16	16	16	
CHLORINATION SYSTEM						
CHLORINE DOSAGE - mg/L	8	8	8	8	8	
CHLORINE APPLIED - LBS/DAY						
AVERAGE	6405	6405	6405	6405	6405	
PEAK	14732	14732	14732	14732	14732	
NUMBER OF CHLORINATORS	4	4	4	4	4	
CAPACITY OF CHLORINATIORS - LBS/DAY						
EACH	4000	4000	4000	4000	4000	
TOTAL	16000	16000	16000	16000	16000	
CHLORINE SOLUTION WATER FLOW - GPM	400	400	400	400	400	One pump operating.

CITY OF TAMPA, FLORIDA
HOWARD F. CURREN ADVANCED WASTEWATER TREATMENT PLANT
BASES OF DESIGN - WASTEWATER

TABLE II-1

31-Aug-99

ITEMS	SERIES MODE		PARALLEL MODE			COMMENTS
			HPO 2-STAGE		HPO 1-STEP	
	DAR STANDARD	DAR WITH DENITE	DAR STANDARD	DAR WITH DENITE	& DAR WITH DENITE	
CHLORINE SOLUTION CONCENTRATION - mg/L						
AVERAGE	1333	1333	1333	1333	1333	
PEAK	3067	3067	3067	3067	3067	
TARGET CHLORINE RESIDUAL - mg/L	1.0	1.0	1.0	1.0	1.0	
DECHLORINATION SYSTEM						
RANGE OF CHLORINE RESIDUAL - mg/L						
MINIMUM	1.0	1.0	1.0	1.0	1.0	
MAXIMUM	2.0	2.0	2.0	2.0	2.0	
RATIO SO2/CL2	1.0	1.0	1.0	1.0	1.0	
SO2 REQUIRED - LBS/DAY						Based on maximum chlorine residual.
AVERAGE	1601	1601	1601	1601	1601	
PEAK	3683	3683	3683	3683	3683	
EVAPORATORS						
NUMBER	2	2	2	2	2	
CAPACITY, EACH - LBS/DAY	4000	4000	4000	4000	4000	
CAPACITY, TOTAL - LBS/DAY	8000	8000	8000	8000	8000	
SULFONATORS						
NUMBER	4	4	4	4	4	
CAPACITY, EACH - LBS/DAY	950	950	950	950	950	
CAPACITY, TOTAL - LBS/DAY	3800	3800	3800	3800	3800	
SO2 SOLUTION WATER FLOW - GPM	250	250	250	250	250	
SO2 SOLUTION CONCENTRATION - mg/L						
AVERAGE	533	533	533	533	533	
PEAK	1227	1227	1227	1227	1227	
EFFLUENT CHARCTERISTICS						Historical averages.
- BOD5 - mg/L	2.0	2.0	2.0	2.0	2.0	
- 1000 LB/DAY	1.6	1.6	1.6	1.6	1.6	
- SUSPENDED SOLIDS - mg/L	2.3	2.3	2.3	2.3	2.3	
- 1000 LB/DAY	1.8	1.8	1.8	1.8	1.8	
- NITROGEN as TKN - mg/L	1.5	1.5	1.5	1.5	1.5	
- 1000 LB/DAY	1.2	1.2	1.2	1.2	1.2	
- NO3-N - mg/L	1.0	1.0	1.0	1.0	1.0	
- 1000 LB/DAY	0.8	0.8	0.8	0.8	0.8	
- PHOSPHORUS - mg/L	5.0	5.0	5.0	5.0	5.0	
- 1000 LB/DAY	4.0	4.0	4.0	4.0	4.0	

CITY OF TAMPA, FLORIDA
HOWARD F. CURREN ADVANCED WASTEWATER TREATMENT PLANT
BASES OF DESIGN - WASTEWATER

TABLE II-1

31-Aug-99

ITEMS		SERIES MODE		PARALLEL MODE			COMMENTS
				HPO 2-STAGE		HPO 1-STEP	
		DAR STANDARD	DAR WITH DENITE	DAR STANDARD	DAR WITH DENITE	& DAR WITH DENITE	
17 PLANT EFFLUENT							
FLOW (mgd)		96.0	96.0	96.0	96.0	96.0	
PLANT EFFLUENT CHARACTERISTICS							
- BOD5	- mg/L	2.0	2.0	2.0	2.0	2.0	
	- 1000 LB/DAY	1.6	1.6	1.6	1.6	1.6	
- SUSPENDED SOLIDS	- mg/L	2.3	2.3	2.3	2.3	2.3	
	- 1000 LB/DAY	1.8	1.8	1.8	1.8	1.8	
- TOTAL N	- mg/L	2.5	2.5	2.5	2.5	2.5	
	- 1000 LB/DAY	2.0	2.0	2.0	2.0	2.0	

CITY OF TAMPA, FLORIDA
HOWARD F. CURREN ADVANCED WASTEWATER TREATMENT PLANT
BASES OF DESIGN - SLUDGE

TABLE II-2

31-Aug-99

ITEMS		SERIES MODE		PARALLEL MODE			COMMENTS
				HPO 2-STAGE		HPO 1-STEP	
		DAR STANDARD	DAR WITH DENITE	DAR STANDARD	DAR WITH DENITE	& DAR WITH DENITE	
1 RAW SLUDGES							
PRIMARY SLUDGE							
TOTAL SOLIDS							
WEST TANKS	- 1000 LB/DAY	42.5	42.5	42.5	42.5	42.5	
	- GAL/DAY	101,874	101,874	101,874	101,874	101,874	
EAST TANKS	- 1000 LB/DAY	44.5	44.5	44.5	44.5	44.5	
	- GAL/DAY	106,648	106,648	106,648	106,648	106,648	
TOTAL	- 1000 LB/DAY	87.0	87.0	87.0	87.0	87.0	
	- GAL/DAY	208,522	208,522	208,522	208,522	208,522	
PERCENT VOLATILE SOLIDS		79%	79%	79%	79%	79%	Historical average.
VOLATILE SOLIDS							
WEST TANKS	- 1000 LB/DAY	33.7	33.7	33.7	33.7	33.7	
EAST TANKS	- 1000 LB/DAY	35.3	35.3	35.3	35.3	35.3	
TOTAL	- 1000 LB/DAY	69.0	69.0	69.0	69.0	69.0	
WASTE ACTIVATED SLUDGE							
HPO SYSTEM	- 1000 LB/DAY	130.8	130.8	95.4	95.4	64.9	
	- GAL/DAY	1,982,070	1,982,070	1,450,331	1,450,331	973,760	Based on plug flow.
DAR SYSTEM	- 1000 LB/DAY	0.0	0.0	18.6	18.6	18.6	
	- GAL/DAY	0	0	440,672	325,303	325,303	Based on step feed.
TOTAL	- 1000 LB/DAY	130.8	130.8	114.0	114.0	83.4	
	- GAL/DAY	1,982,070	1,982,070	1,891,002	1,775,633	1,299,063	
PERCENT VOLATILE SOLIDS		84%	84%	84%	84%	84%	Historical average.
VOLATILE SOLIDS							
WEST TANKS	- 1000 LB/DAY	109.8	109.8	80.0	80.0	54.4	
EAST TANKS	- 1000 LB/DAY	0.0	0.0	15.6	15.6	15.6	
TOTAL	- 1000 LB/DAY	109.8	109.8	95.6	95.6	70.0	
PERCENTAGE OF TOTAL SOLIDS							
PRIMARY SLUDGE		40%	40%	43%	43%	51%	
WASTE ACTIVATED SLUDGE		60%	60%	57%	57%	49%	

CITY OF TAMPA, FLORIDA
HOWARD F. CURREN ADVANCED WASTEWATER TREATMENT PLANT
BASES OF DESIGN - SLUDGE

TABLE II-2

31-Aug-99

ITEMS	SERIES MODE		PARALLEL MODE			COMMENTS
			HPO 2-STAGE		HPO 1-STEP	
	DAR STANDARD	DAR WITH DENITE	DAR STANDARD	DAR WITH DENITE	& DAR WITH DENITE	
2 GRAVITY THICKENERS						
PERCENT OF WAS TO GRAVITY THICKENERS	25%	25%	25%	25%	25%	Assumption.
WAS TO GRAVITY THICKENERS - 1000 LB/DAY	32.7	32.7	28.5	28.5	20.9	
- GAL/DAY	495,518	495,518	472,751	443,908	324,766	
NUMBER OF TANKS - TOTAL	2	2	2	2	2	
- OPERATING	1	1	1	1	1	
DIAMETER OF TANKS - FEET	55.0	55.0	55.0	55.0	55.0	
TOTAL THICKENING AREA - SF	4752	4752	4752	4752	4752	
OPERATING THICKENING AREA - SF	2376	2376	2376	2376	2376	
LOADING - LB/SF/DAY	13.8	13.8	12.0	12.0	8.8	Based on operating tanks.
- GAL/DAY/SF	209	209	199	187	137	Above 100 minimum, so no dil. water neede
DILUTION WATER (IF NEEDED)						
RATIO	0.4	0.4	0.4	0.5	0.6	
QUANTITY - GAL/DAY	201,600	201,600	201,600	201,600	201,600	Based on experience at 140 gpm.
SOLIDS CAPTURE	95%	95%	95%	95%	95%	
UNDERFLOW SOLIDS - % SOLIDS	3.5%	3.5%	3.5%	3.5%	3.5%	Historical average with polymer.
- 1000 LB/DAY	31.1	31.1	27.1	27.1	19.8	
- GAL/DAY	106,456	106,456	92,721	92,721	67,873	
3 BELT THICKENING BUILDING						
PERCENT OF WAS TO BELT THICKENERS	75%	75%	75%	75%	75%	
WAS TO BELT THICKENERS - 1000 LB/DAY	98.1	98.1	85.5	85.5	62.6	
- GAL/DAY	1,486,553	1,486,553	1,418,252	1,331,725	974,297	
NUMBER OF 2-M BELT THICKENING UNITS						
TOTAL	3	3	3	3	3	
OPERATING	2	2	2	2	2	
FLOW PER OPERATING UNIT - GPM/EACH	516	516	492	462	338	

CITY OF TAMPA, FLORIDA
HOWARD F. CURREN ADVANCED WASTEWATER TREATMENT PLANT
BASES OF DESIGN - SLUDGE

TABLE II-2

31-Aug-99

ITEMS		SERIES MODE		PARALLEL MODE			COMMENTS
				HPO 2-STAGE		HPO 1-STEP	
		DAR STANDARD	DAR WITH DENITE	DAR STANDARD	DAR WITH DENITE	& DAR WITH DENITE	
SOLIDS CAPTURE		95%	95%	95%	95%	95%	
THICKENED SOLIDS	- % SOLIDS	5.0%	5.0%	5.0%	5.0%	5.0%	
	- 1000 LB/DAY	93.2	93.2	81.2	81.2	59.4	
	- GAL/DAY	223,557	223,557	194,713	194,713	142,533	
4 MIXED SLUDGE PUMPING STATION							
TOTAL SLUDGE APPLIED	- 1000 LB/DAY	211.3	211.3	195.2	195.2	166.2	Primary and thickened WAS.
	- GAL/DAY	538,535	538,535	495,956	495,956	418,927	
	- 1000 LB-VSS/DAY	173.3	173.3	159.9	159.9	135.5	
	- % SOLIDS	4.7%	4.7%	4.7%	4.7%	4.8%	
	- % VSS	82%	82%	82%	82%	82%	
5 ANAEROBIC DIGESTERS							
NUMBER OF DIGESTERS		7	7	7	7	7	
VOLUME OF DIGESTERS	- MG						
NO. 1		837,760	837,760	837,760	837,760	837,760	
NO. 2		837,760	837,760	837,760	837,760	837,760	
NO. 3		837,760	837,760	837,760	837,760	837,760	
NO. 4		860,000	860,000	860,000	860,000	860,000	
NO. 5		1,600,000	1,600,000	1,600,000	1,600,000	1,600,000	
NO. 6		2,450,000	2,450,000	2,450,000	2,450,000	2,450,000	
NO. 7		2,450,000	2,450,000	2,450,000	2,450,000	2,450,000	
TOTAL		9,873,280	9,873,280	9,873,280	9,873,280	9,873,280	An eighth digester may be added in the futur
HYDRAULIC DETENTION TIME - DAYS		18.3	18.3	19.9	19.9	23.6	
PERCENT VOLATILE SOLIDS DESTRUCTION		50%	50%	50%	50%	50%	
DIGESTED SLUDGE SOLIDS							
VOLATILE	- 1000 LB-VSS/DAY	86.7	86.7	79.9	79.9	67.8	
INERTS	- 1000 LB/DAY	37.9	37.9	35.3	35.3	30.7	
TOTAL	- 1000 LB/DAY	124.6	124.6	115.3	115.3	98.4	
	- GAL/DAY	538,535	538,535	495,956	495,956	418,927	
	- % SOLIDS	2.8%	2.8%	2.8%	2.8%	2.8%	
GAS PRODUCTION	- CF/LB VSS DESTR.	15	15	15	15	15	

CITY OF TAMPA, FLORIDA
HOWARD F. CURREN ADVANCED WASTEWATER TREATMENT PLANT
BASES OF DESIGN - SLUDGE

TABLE II-2

31-Aug-99

ITEMS		SERIES MODE		PARALLEL MODE			COMMENTS
				HPO 2-STAGE		HPO 1-STEP	
		DAR STANDARD	DAR WITH DENITE	DAR STANDARD	DAR WITH DENITE	& DAR WITH DENITE	
	- 1000 CF/DAY	1300	1300	1199	1199	1016	
GAS STORAGE VOLUME	- 1000 CF	90	90	90	90	90	
6 SLUDGE STORAGE TANKS							
NUMBER OF TANKS		5	5	5	5	5	
VOLUME OF TANKS	- MG						
NO. 1		150,000	150,000	150,000	150,000	150,000	
NO. 2		150,000	150,000	150,000	150,000	150,000	
NO. 3		150,000	150,000	150,000	150,000	150,000	
NO. 4		500,000	500,000	500,000	500,000	500,000	
NO. 5		500,000	500,000	500,000	500,000	500,000	
TOTAL		1,450,000	1,450,000	1,450,000	1,450,000	1,450,000	
7 SLUDGE DEWATERING BUILDING							
TOTAL SLUDGE APPLIED	- 1000 LB/DAY	124.6	124.6	115.3	115.3	98.4	
	- GAL/DAY	538,535	538,535	495,956	495,956	418,927	
	- GPM	374	374	344	344	291	
	- % SOLIDS	2.8%	2.8%	2.8%	2.8%	2.8%	
NUMBER OF BELT FILTER PRESSES - TOTAL							
PARKSON (OLDER)		3	3	3	3	3	
ANDRITZ (NEWER)		6	6	6	6	6	
NUMBER OF BFP'S - OPERATING							
PARKSON (OLDER)		1	1	1	1	1	
ANDRITZ (NEWER)		5	5	5	5	5	
FLOW PER UNIT	- GPM	62	62	57	57	48	
SOLIDS CAPTURE		95%	95%	95%	95%	95%	
DEWATERED SOLIDS	- % SOLIDS	17.5%	17.5%	17.5%	17.5%	17.5%	Historical average.
	- 1000 LB/DAY	118.4	118.4	109.5	109.5	93.5	
8 HEAT DRYING FACILITY							
NUMBER OF HEAT DRYING TRAINS		2	2	2	2	2	

CITY OF TAMPA, FLORIDA
HOWARD F. CURREN ADVANCED WASTEWATER TREATMENT PLANT
BASES OF DESIGN - SLUDGE

TABLE II-2

31-Aug-99

ITEMS		SERIES MODE		PARALLEL MODE			COMMENTS
				HPO 2-STAGE		HPO 1-STEP	
		DAR STANDARD	DAR WITH DENITE	DAR STANDARD	DAR WITH DENITE	& DAR WITH DENITE	
SLUDGE APPLIED	- % SOLIDS	17.5%	17.5%	17.5%	17.5%	17.5%	
	- 1000 LB/DAY (DRY)	118.4	118.4	109.5	109.5	93.5	
	- 1000 LB/DAY (WET)	676.3	676.3	625.8	625.8	534.4	
	- 1000 LB/DAY(WATER	558.0	558.0	516.3	516.3	440.9	
BIOSOLIDS PRODUCED	- 1000 LB/DAY (DRY)	118.4	118.4	109.5	109.5	93.5	
	- % SOLIDS	95.0%	95.0%	95.0%	95.0%	95.0%	Historical average.
	- 1000 LB/DAY(WATER	6.2	6.2	5.8	5.8	4.9	
	- 1000 LB/DAY (TOTAL	124.6	124.6	115.3	115.3	98.4	
	- 1000 TPD (TOTAL)	62.3	62.3	57.6	57.6	49.2	
EVAPORATION REQUIRED	- 1000 LB/DAY (WTR)	551.7	551.7	510.5	510.5	435.9	
	- 1000 LB/HR (WATER	23.0	23.0	21.3	21.3	18.2	
EVAP. REQ. PER UNIT	- 1000 LB/DAY(WATER	275.9	275.9	255.3	255.3	218.0	
	- 1000 LB/HR (WATER	11.5	11.5	10.6	10.6	9.1	

III-DA-DAR - DIFFUSED AIR REACTORS (025)

A. GENERAL

The four Diffused Air Reactors contain the following equipment and systems:

- Diffused Air Reactors
- Flow Metering Equipment
- Sluice Gates
- Slide Gates
- Return Sludge Rate Controller Equipment
- Mechanical Mixers
- Diffused Air Controller Equipment
- Methanol Feed Controller Equipment
- FBS Collection System
- Alkalinity Monitoring System
- Plant Air
- Effluent Water
- Power Distribution

The Diffused Air Reactors work in conjunction with Final Sedimentation Tanks Nos. 13-20. The process description for various modes of operation is included in Chapter II.

Refer to Table III-DA-DAR-1, Diffused Air Reactors - Facility Equipment Summary, for control numbers, manufacturers, equipment capacities, and operation, maintenance, contract plan, and shop drawing references.

B. PROCESS CONTROL - ACTIVATED SLUDGE

(1) DESCRIPTION

The diffused air reactors (DAR) work in conjunction with the high purity oxygen (HPO) activated sludge system. The process is described in detail in Chapter II. Table II-1 shows the bases of design for each of the wastewater treatment processes. These systems can be operated in the series or parallel modes described in general as follows:

a. SERIES MODE

In the series mode of operation (see Figure II-PD-GN-2), the six reactors in the HPO system in conjunction with the Final Sedimentation Tanks No. 1-12, are used for secondary treatment and carbonaceous BOD_5 removal. All of the plant flow passes through and is treated by the HPO system. The DAR system, consisting of four reactors and Final Sedimentation Tanks No. 13-20, is used for second stage nitrification treatment. After treatment in the HPO system, all of the plant flow passes through and is treated by the DAR system. The DAR system effluent passes through Junction Chamber No. 6 to the Denitrification Filters.

b. PARALLEL MODE

In the parallel mode of operation (see Figure II-PD-GN-3), the HPO and DAR systems are operated in parallel. A portion of the primary effluent from the Main Pumping Station (up to 26 mgd, average) is directed through Junction Chamber No. 5 to the DAR system. The remainder of the

flow (up to 70 mgd, average) is directed to the HPO system. In the parallel mode, the DAR system is operated as a single-stage nitrification system in which biological denitrification is also possible. The HPO system, in the parallel mode, can be operated as a two-stage nitrification system or as a single-stage system. The two systems operate independently. The effluent from the HPO and DAR systems goes to the Denitrification Filters.

(2) MEASUREMENTS AND ANALYSIS

a. SUSPENDED SOLIDS

By measuring and comparing the suspended solids concentration in the system influent against that of the Final Sedimentation Tanks effluent, an indication of the solids removal efficiency of the activated sludge process may be obtained.

b. 5-DAY BIOLOGICAL OXYGEN DEMAND (BOD_5)

By measuring and comparing the BOD_5 concentration in the system influent against that of the Final Sedimentation Tanks effluent, an indication of the BOD_5 removal efficiency of the activated sludge process may be obtained.

c. DISSOLVED OXYGEN

The microorganisms required for the activated sludge process require oxygen to survive and grow. High purity oxygen (HPO) Reactors or diffused air (Diffused Air Reactors) is transferred into the MLSS to satisfy this requirement. The dissolved oxygen (DO) should be monitored and maintained at a target minimum concentration. An initial target of 2 milligrams per liter is suggested. Equipment is provided for continuous online DO monitoring.

d. RETURN SLUDGE RATE AND CONCENTRATION

The return sludge rate and concentration are required to measure the quantity of activated sludge entering the reactors.

e. WASTE SLUDGE RATE AND CONCENTRATION

The waste sludge rate and concentration are used to determine the major portion of the solids leaving the system. The only other solids leaving are those flowing over the effluent weir. Control of the solids leaving the system is the most practical control of the system biology since it is directly related to the solids retention time (SRT) explained under "Process Control," below. The waste sludge concentration is the same as the return sludge concentration since sludge is wasted from the return sludge pipelines.

f. MIXED LIQUOR SUSPENDED SOLIDS

The mixed liquor suspended solids (MLSS) concentration is a measure of the amount of activated sludge in contact with the wastewater in the reactors. The MLSS concentration is related to the solids produced in the system and the rate of sludge wasting as described below under "Process Control".

g. SETTLED SLUDGE VOLUME

The settled sludge volume test of the mix liquor is performed for routine monitoring of the biological process. This information is useful in determining the settleability of the sludge.

h. TYPE OF MICROORGANISMS PRESENT

Samples of carbonaceous stage activated sludge can be examined under a microscope to determine the types of microorganisms present. Higher order organisms, such as protozoa and rotifers are desirable. Filamentous organisms are not desirable in large numbers and will cause the sludge to have poor settling characteristics if present in large numbers. However, some filamentous organisms are needed to hold the floc together to prevent similarly poor settling pinpoint floc.

The above is generally true for nitrification stage sludge, however, nitrifying organisms are generally not identifiable under a microseope.

i. pH

The pH of the wastewater is a key factor in the growth of the organisms. Most of the organisms required for BOD reduction and those required for nitrification cannot tolerate pH levels above 9.5 or below 4.0. In general, the pH range of 6.5 to 7.5 is the most desirable for the activated sludge process. The pH can be affected by changes in the alkalinity as noted below.

j. ALKALINITY

The alkalinity of the wastewater is a key factor in keeping the pH of the wastewater at the proper level. Alkalinity is consumed during the nitrification process, creating an upward pressure on the pH. Alkalinity is added by denitrification, thereby having a stabilizing influence on the pH. Equipment is provided for continuous online alkalinity monitoring at various locations.

k. TEMPERATURE

The efficiency of the activated sludge process is dependent on the temperature of the wastewater. Lower wastewater temperatures will generally require that higher SRT's be maintained.

(3) PROCESS CONTROL

a. SOLIDS RETENTION TIME (SRT)

Process efficiency requires that the correct types of microorganisms exist in the reactors. The types of microorganisms may be controlled by adjusting the SRT. (The SRT is also referred to as the mean cell residence time.) The SRT is a measure of how long the microorganisms stay in the process, and may be stated as follows:

$$SRT = \frac{Solids\ in\ Reactor\ under\ Aeration\ (lbs)}{Solids\ Produced\ (lbs/day)}$$

The solids under aeration is computed from the MLSS concentration and the volume of the DAR's. The solids produced in the system is typically about 0.68 pounds per pound of the TSS influent to the DAR nitrification system in the series mode. The quantity of solids produced will increase at lower SRT's. In a stable system, the solids produced in the system must be removed. The solids production is, therefore, the sum of the solids wasted from the system and the solids in the effluent. The equation for SRT may be restated as follows:

$$SRT = \frac{X_a \times V}{(Q_W \times X_r) + (Q_E \times X_E)}$$

Where:

- X_a, is the 7-day running average MLSS, in mg/l
- V, is the volume of the DAR reactors in service and aerated, in million gallons
- Q_w, is the waste sludge flow, in mgd
- X_R, is the waste sludge concentration, in mg/l
- Q_E, is the effluent or wastewater flow over the final tank weirs, in mgd
- X_E, is the effluent suspended solids concentration, in mg/l

In the above equation the operator has direct daily control of the SRT and Q_w. The number of reactors in service can be controlled on a periodic basis. The SRT is selected based on experience. Typical, target SRT's for nitrification is 8-10 days for complete nitrification throughout the year whether in the series or the parallel mode. Q_w is controlled directly by setting a waste sludge flow rate and is the major control used to maintain a selected SRT. X_w will be the same as the return sludge concentration.

In general, a higher SRT will mean a higher MLSS concentration. Also, a higher MLSS concentration means a higher solids load on the final sedimentation tanks. The performance of the final sedimentation tanks is better the lower the solids load. There is, therefore, a need to maintain an SRT high enough to allow the biological system to perform but low enough to allow the final sedimentation tanks to work well.

After a target SRT has been established, the principal control strategy for the activated sludge process will be to maintain the target SRT based on a seven-day running average. A seven-day running average is used since biological changes take place slowly. Using the target SRT, the desired sludge wastage rate is computed using the format shown in Table III-DA-DAR-2.

TABLE III-DA-DAR-2
CITY OF TAMPA FLORIDA
HOWARD F. CURREN ADVANCED WASTEWATER TREATMENT PLANT
SRT AND WASTAGE CALCULATION

MONTH/YEAR _____

DAY A	PLANT INFL. FLOW [MGD] B	SYSTEM EFFL. FLOW [MGD] C	EFFL. SS [MG/L] D	EFFL. SOLIDS QUANT. (CxD) 8.34 E	7-DAY AVG. SOLIDS QUANT. F	MLSS AVG. [MG/L] G	7-DAY AVG. OF AVG. MLSS [MG/L] H	ACTUAL TOTAL WASTAGE [MGD] J	WAS SS [MGD] K	7-DAY AVG. OF WAS SS [MG/L] L	WASTE SOLIDS QUANT. (JxK) M	7-DAY AVG. WASTE SOLIDS N	TARGET SRT [DAYS] O	DESIRED WASTAGE RATE SEE NOTE P	SRT 7 [DAYS] SEE NOTE Q	SRT [DAYS] SEE NOTE R
1																
2																
3																
4																
5																
6																
7																
8																
9																
10																
11																
12																
13																
14																
15																
16																
17																
18																
19																
20																
21																
22																
23																
24																
25																
26																
27																
28																
29																
30																
31																

NOTES:

1. DESIRED WASTAGE RATE: $Q = \{[(V \times K) \div P] - F\} \div K$
2. SRT 7: $R = (V \times K) \div (F + N)$
3. SRT: $S = (V \times G) \div (E + M)$
4. VOLUMES
   V @ 1 REACTOR = 1.27 MG
   V @ 2 REACTORS = 2.54 MG
   V @ 3 REACTORS = 3.81 MG

File: TOM3DA.WPD
Date: 7/14/99

b. DISSOLVED OXYGEN

The organisms required for the activated sludge process require oxygen to survive and grow. Dissolved oxygen (DO) probes are provided to continuously measure and indicate the DO of the mixed liquor in each stage of each reactor. The DO is controlled by the quantity of air applied to each zone. This is controlled by the operator by changing valve positions and by changing the blower output.

c. SETTLEABILITY

Sludge settleability can be improved typically in two ways:

1. Sludge settleability in a diffused air system can often be improved by applying more air to the reactors. Even if the DO is at the target level, additional air may improve settleability.

2. Sludge settleability in the final sedimentation tanks can be improved by lowering the MLSS sent to the final tanks. In the plug flow mode of operation, the MLSS cannot be lowered without lowering the SRT. However, changing to the step feed mode of operation can lower the MLSS applied to the final sedimentation tanks without lowering the SRT. (See Chapter II.)

d. SUPPLEMENTAL NITRIFICATION STAGE INFLUENT

When operated as a two-step process (series mode), the carbonaceous stage may remove so much of the organic material that there is a need to get a supplemental input of organic chemicals to serve as food for the microorganisms in the nitrification stage. The supplemental stage pipeline is often referred to as the "spike line". The spike line runs through a flow meter in Junction Chamber No. 5. The flow can be allowed through this line for a few hours every day or continuously, as needed, based on experience.

C. DIFFUSED AIR REACTORS

(1) DESCRIPTION (SEE FIGURES III-DA-DAR-1 AND 2)

The Diffused Air Reactors are provided to transfer the oxygen from atmospheric air into the mixed liquor in the activated sludge process.

Each of the four reactors is 318 feet long by 53 feet wide and has an approximate water depth of 17.7 feet. The tanks are adjacent to each other and are of common wall construction. Each reactor is divided into six zones by baffle walls that allow the liquid to pass from one zone to the next.

Each reactor has a 72-inch diameter influent conduit to transfer the wastewater from the Nitrification Pumping Station, located east of the Diffused Air Reactors to the influent channels on the west side of Zones 1 and 2. Four magnetic flow meters, designated FE-302, 303, 304 and 305 are located in the influent conduits. The influent channel west of Zone 1 is used during plug flow and the influent channel west of Zone 2 is used during step feed operation.

Wastewater enters the reactors from the influent channels through inlet sluice gates. Activated sludge is returned to the first zone of each reactor and is mixed with the influent wastewater to form mixed liquor in either Zone 1 (plug flow) or Zone 2 (step feed). Each zone is provided with air diffusers to transfer air into the mixed liquor and to keep the solids in suspension. Mechanical mixers are provided in Zones 2, 3, 5 and 6 to keep the solids in suspension when the diffused air is shut off in any of these zones to provide anoxic conditions for denitrification. The effluent is controlled by effluent sluice gates which control the flow to the mixed liquor conduit. Level in the reactors is controlled by fixed weirs in the Weir Structure.

(2) NORMAL OPERATION

The two main modes of operation are the series mode and the parallel mode. In the **series mode** of operation, primary effluent receives first stage carbonaceous BOD_5 treatment in HPO Reactor Nos. 1 - 6 and Final Sedimentation Tank Nos. 1 - 12. Second stage nitrification/dentrification treatment is achieved in Diffused Air Reactor Nos. 1 - 4 and Final Sedimentation Tank Nos. 13 - 20. In the **parallel mode** of operation, the primary effluent is split between the HPO Reactors and the Diffused Air Reactors. A portion of the primary effluent (up to 26 mgd) may receive carbonaceous BOD_5 and nitrification/dentrification treatment in the Diffused Air Reactor Nos. 1 - 4 and Final Sedimentation Tank Nos. 13 - 20. The remainder of the flow (up to 70 mgd) receives carbonaceous BOD_5 and nitrification treatment in the HPO Reactor Nos. 1 - 6 and Final Sedimentation Tank Nos. 1 - 12.

Under the series mode of operation, carbonaceous effluent flows from Final Sedimentation Tank Nos. 1-12 into Junction Chamber No. 5 and then to the Diffused Air Reactors through the Nitrification Pumping Station. The flow enters the Diffused Air Reactors through the 72-inch diameter Diffused Air Reactor Influent Conduits. In the Diffused Air Reactors, the carbonaceous effluent receives nitrification/denitrification treatment. Denitrification can be performed in Zones 5 and 6 of each reactor. From the Diffused Air Reactors, the nitrified mixed liquor flows through Mixed Liquor Transfer Channels to the Influent Channel for Final Sedimentation Tank Nos. 13-20. The sludge collected in Final Sedimentation Tank Nos. 13-20 is continuously returned to the Diffused Air Reactors. Since the carbonaceous activated sludge process (in the HPO Reactors) has a high BOD_5 and suspended solids removal efficiency, a regulated stream of primary treatment effluent can bypass the carbonaceous stage through a 20-inch diameter conduit (the spike line) through Junction Chamber No. 5, and be fed directly into the nitrification stage (DAR) to supplement the food supply requirement of the nitrifying bacteria.

In the parallel mode, some of the primary effluent is directed from the Main Pumping Station through Junction Chamber No. 5 and then to the Diffused Air Reactors through the Nitrification Pumping Station. The flow enters the Diffused Air Reactors through the 72-inch diameter Diffused Air Reactor Influent Conduits. In the Diffused Air Reactors, the wastewater receives carbonaceous and nitrification treatment simultaneously. Denitrification can be performed in Zones 2 and 3 of each reactor. From the Diffused Air Reactors, the nitrified mixed liquor flows through the Mixed Liquor Transfer Channels to the Influent Channel for Final Sedimentation Tank Nos. 13-20. When denitrifying, some of the effluent mixed liquor from the Diffused Air Reactors can be diverted back into the Diffused Air Reactors through the Nitrification Pumping Station to provide the source of nitrate back to Zones 2 and 3 for denitrification to occur. (See Chapter III-NPS, "Nitrification Pumping Station and Junction Chamber No. 5" for more

information about recycling of mixed liquor.) The sludge collected in Final Sedimentation Tank Nos. 13-20 is continuously returned to the Diffused Air Reactors.

The Diffused Air Reactors can operate in the plug flow or the step feed mode. The influent sluice gates can be controlled to allow the reactors to run in either plug flow or step feed. During plug flow, the wastewater and the return sludge discharge into Zone 1 together. During step feed, the return sludge is discharged into Zone 1 while the influent wastewater flows directly into Zone 2.

For denitrification to occur, ammonia nitrogen must have been converted to nitrate and a source of carbon must be available (see Chapter II). The reactors can be used for denitrification as follows:

- Denitrification in the Series Mode. Zone 6 or Zones 5 and 6 can be used to denitrify in the series mode of operation. Nitrate is formed in the upstream zones as ammonia nitrogen is oxidized. To denitrify in Zone 6 or in Zones 5 and 6, the air needs to be turned off to those zones, the mixers need to be turned on in those zones to maintain solids in suspension, and methanol needs to be added to the upstream side of the denitrifying zones.

- Denitrifying in the Parallel Mode. Zone 2 or Zones 2 and 3 can be used to denitrify in the parallel mode. Nitrate will be formed in Zones 3-6 or Zones 4-6, respectively, from ammonia nitrogen. The mixed liquor exiting the reactor is a source of nitrate. A portion of the mixed liquor is therefore recycled to Zone 2 through the Nitrification Pumping Station. (See Chapter III-NPS, "Nitrification Pumping Station and Junction Chamber No. 5" for more information about recycling of mixed liquor.) The carbon source for denitrification in Zones 2 and 3 is from the organic in the incoming wastewater (primary effluent); thus, the conditions for denitrification are established. For denitrification to occur in the parallel mode, the system must be operated in the step feed.

(3) START-UP, SHUTDOWN AND DETERRING PROCEDURES

Startup and shutdown of the diffused air reactors is similar whether in the series or the parallel mode. To startup, shutdown or dewater a Diffused Air Reactor, use the following procedures:

a. START-UP

- Select reactor or reactors to be put into operation
- Start-up appropriate Final Sedimentation Tanks as described in the Chapter titled "Final Sedimentation Tanks"
- Open selected slide gates, DAR-SLG-13-20, in the Diffused Air Reactor Weir Structure Nos. 1 and 2.
- Open sluice gates, DAR-SG-1A, 2A, 3A, or 4A, for plug flow operation or sluice gates, DAR-SG-1B, 2B, 3B, or 4B, for step feed operation as described in the subsection herein titled "Sluice Gates" (The step feed mode of operation should be selected for the parallel mode of operation when denitrifying.)

- Open slide gates, DAR-SLG-1, 2, 3 or 4, in the Diffused Air Reactor Influent Conduits as described in the subsection herein titled "Slide Gates: DAR-SLG-1 through 22"

CAUTION

The opening of these gates allows the influent wastewater into the reactors. If filling an empty reactor, open the gate only partially at first to avoid a large rush of wastewater into the reactor and sweeping across the air diffusers mounted on the floor of the reactors. Once water is substantially above the level of the air diffusers, the influent gates may be fully opened.

- Start-up the appropriate return sludge pumping equipment as described in the chapter titled "Sludge Pumping Station Nos. 1, 2, 3, 4 and 5"
- When the water level gets to a point above the diffusers, start-up diffused air equipment or mixers in appropriate Diffused Air Reactor as described in the subsections herein titled "Diffused Air Controller Equipment: AV-1 through 6, FE-311 through 316 and AIT-330 through 341" and "Mechanical Mixers: DAR-MM-1A, 1B, 1C, 1D through 4A, 4B, 4C and 4D"
- Start-up appropriate blowers as described in the subsection herein titled "Diffused Air Equipment: BB-MCB-1, 2, 3 and 4, BIV-1, 2, 3 and 4 and ABV-1"
- Start-up the Return Sludge Rate Controller Equipment as described in the subsection herein titled "Return Sludge Rate Controller Equipment: RSV-1 through 4 and FE-306 through 309"
- Start-up the FBS Collection System as described in the subsection herein titled "FBS Collection System: DAR-FSP-1, 2, and 3, DAR-SLG-5 through 12 and SWV-1A, 1B through 4A and 4B"
- Start-up the Alkalinity Monitoring System as described in the subsection herein titled "Alkalinity Monitoring System"
- If denitrifying in the series mode in Zones 5 and 6 of the reactors, start-up the Methanol Feed Controller Equipment as described in the subsection herein titled "Methanol Feed Controller Equipment"
- When the reactor is completely full, open sluice gates, DAR-SG-1C, 1D, 2C, 2D, 3C, 3D, 4C, or 4D, as described in the subsection herein titled "Sluice Gates"
- Start-up diffused air equipment in appropriate Mixed Liquor Transfer Channel as described in the section titled "Process Air Equipment and Systems"

NOTE

When filling a reactor, the 72-inch influent conduit must be filled simultaneously to prevent the conduit from floating. Never dewater the influent conduit when it is in a submerged or partially submerged condition.

b. SHUTDOWN

- Select reactor or reactors to be shutdown
- Close slide gates, DAR-SLG-1, 2, 3 or 4, in the Diffused Air Reactor Influent Conduits as described in the subsection herein titled "Slide Gates: DAR-SLG-1 through 22"
- Close sluice gates, DAR-SG-1C, 1D, 2C, 2D, 3C, 3D, 4C or 4D, as described in the subsection herein titled "Sluice Gates: DAR-SG-1A, 1B, 1C, 1D through 4A, 4B, 4C, 4D and 1 through 7"
- Shutdown the appropriate rate controller on the Return Sludge Rate Controller Equipment as described in the subsection herein titled "Return Sludge Rate Controller Equipment: RSV-1, 2, 3, and 4 and FE-306 through 309"
- If dentrifying in the series mode, shutdown the Methanol Feed Controller Equipment as described in the subsection herein titled "Methanol Feed Controller Equipment: MFV-1, 2, 3, and 4 and FE-380 through 383"
- Shutdown the Alkalinity Monitoring System as described in the subsection herein titled "Alkalinity Monitoring System: DAR-SP-1A, 1B, 2A, 2B, 3A, 3B, 4A, and 4B and NPS-SP-5"
- Shutdown the FBS Collection System as described in the subsection herein titled "FBS Collection System: DAR-FSP-1, 2, and 3, DAR-SLG-5, 6, 7, 8, 9, 10, 11, and 12 and SWV-1A, 1B, 2A, 2B, 3A, 3B, 4A, and 4B"

NOTE

Never dewater the 72-inch influent conduit when it is in a submerged or partially submerged condition. When a reactor is filled with mixed liquor, the Mechanical Mixers or the Air Diffusers must remain on at all times to prevent solid deposition on the tank floor.

c. DEWATERING - REACTORS AND INFLUENT CHANNEL

- Shut down the reactor to be dewatered as described above
- Open the manually operated sluice gate, DAR-SG-1, 2, 3 or 4, in the reactor to be dewatered
- As the liquid level drops in the reactor, wash down the tank walls, baffle and normally submerged equipment using the effluent water hose connections provided.

NOTE

The Diffused Air Reactors drain into the drain located on the west side of the reactors. The flow from the drain is collected in the Dewatering Sump located east of Sludge Pumping Station No. 5 and is pumped through Junction Chamber No. 5.

- Once the liquid level drops to a point slightly above the diffusers, shutdown the air flow to the reactor.

d. DEWATERING - WEIR STRUCTURES AND MIXED LIQUOR TRANSFER CHANNELS

The Weir Structures are dewatered through a drain that connects to the Dewatering Pumping Station on the east side of Sludge Pumping Station No. 5. The Mixed Liquor Transfer Channels are dewatered through the Weir Structures and then to the Dewatering Pumping Station. It is possible to dewater a Weir Structure without dewatering a Mixed Liquor Transfer Channel, but it is not possible to dewater a Mixed Liquor Transfer Channel without dewatering a Weir Structure. The dewatering procedures are as follows:

- Place stop logs or a stop plate in stop log grooves on the influent side of the Weir Structure to be dewatered.
- To dewater a Weir Structure, open the manually operated sluice gates, DAR-SG-5 or 6, in the area to be dewatered
- To dewater a Weir Structure and a Mixed Liquor Transfer Channel, open the manually operated sluice gates, DAR-SG-5 or 6, and the manually operated slide gates, DAR-SLG-21 or 22, in the channel to be dewatered
- As the liquid level drops, wash down the walls using the effluent water hose connections provided.

D. FLOW METERING EQUIPMENT: FE-302, 303, 304 and 305

(1) DESCRIPTION (SEE FIGURE III-DA-DAR-1)

Flow Metering Equipment is provided to measure flow into each Diffused Air Reactor from the Nitrification Pumping Station. The flow metering equipment consists of four magnetic flow meters, designated FE-302, 303, 304 and 305 and associated local flow transmitters, controller instrumentation on the Blower Building Control Panel (BBCP) and piping and fittings.

Instrumentation on the BBCP includes four flow indicators, designated FI-302, 303, 304 and 305, four flow totalizers, designated FQ-302, 303, 304 and 305, and one total flow indicator, designated FI-320.

The Flow Metering Equipment works as follows: primary or secondary effluent is pumped from the Nitrification Pumping Station to the Diffused Air Reactors Influent Channel; flow is split to each of the Diffused Air Reactor Influent Conduits based on the position of influent slide gates DAR-SLG-1 through 4; magnetic flow meters FE-302, 303, 304 and 305 measure flow into Diffused Air Reactor Nos. 1, 2, 3 and 4, respectively; the operator adjusts the position of the influent slide gates to balance flows as required.

NOTE

Flow Metering Equipment works in conjunction with influent slide gates DAR-SLG-1, 2, 3 and 4. Instrumentation on the BBCP for control of the influent slide gates includes four horizontal bar graph position indicators, designated ZI-302, 303, 304 and 305, for indicating slide gate position and four

OPEN/STOP/CLOSE selector switches to adjust each slide gate position. Refer to subsection herein titled "Slide Gates: DAR-SLG-1 through 22" for information on their operation.

Flow meters FE-302, 303, 304 and 305 are 60-inch, in-line magnetic type flow meters with an operating range of 5 to 100 mgd. Each flow meter has a local flow transmitter, designated FIT-302, 303, 304 and 305.

(2) MONITORS AND ALARMS

The Flow Metering Equipment can be monitored from the Blower Building Control Panel (BBCP). The BBCP has flow indicators and totalizers for each flow meter and a total flow indicator for all four Diffused Air Reactors.

The Remote Transmission Unit in the Control Room of the Blower Building continuously scans and transmits the condition of all status and alarm points to the SCADA system in the Process Control Room in the Main Pumping Station.

E. SLUICE GATES: DAR-SG-1A, 1B, 1C, 1D through 4A, 4B, 4C, 4; and 1 through 7

(1) DESCRIPTION (SEE FIGURE III-DA-DAR-1)

Sluice Gates are provided in the Diffused Air Reactors to control flow in and out of the reactors and to allow dewatering of the various sections of the reactors. Table III-DA-DAR-3 indicates the Contract Plan designation number, size, operator type and function of the sluice gates.

TABLE III-DA-DAR-3 - FUNCTION OF SLUICE GATES

GATE CONTRACT PLAN DESIGNATION	SIZE (INCHES)	OPERATOR TYPE	FUNCTION
DAR-SG-1A	54 x 96	Electric Motor	Gate permits flow into Zone 1 of Diffused Air Reactor No. 1 (in open position)
DAR-SG-1B	54 x 96	Electric Motor	Gate permits flow into Zone 2 of Diffused Air Reactor No. 1 (in open position)
DAR-SG-1C and 1D	60 x 108	Electric Motor	Gates permit flow into the Mixed Liquor Conduit from Diffused Air Reactor No. 1 (in open position)
DAR-SG-2A	54 x 96	Electric Motor	Gate permits flow into Zone 1 of Diffused Air Reactor No. 2 (in open position)
DAR-SG-2B	54 x 96	Electric Motor	Gate permits flow into Zone 2 of Diffused Air Reactor No. 2 (in open position)
DAR-SG-2C and 2D	60 x 108	Electric Motor	Gates permit flow into the Mixed Liquor Conduit from Diffused Air Reactor No. 2 (in open position)
DAR-SG-3A	54 x 96	Electric Motor	Gate permits flow into Zone 1 of Diffused Air Reactor No. 3 (in open position)

TABLE III-DA-DAR-3 - FUNCTION OF SLUICE GATES

GATE CONTRACT PLAN DESIGNATION	SIZE (INCHES)	OPERATOR TYPE	FUNCTION
DAR-SG-3B	54 x 96	Electric Motor	Gate permits flow into Zone 2 of Diffused Air Reactor No. 3 (in open position)
DAR-SG-3C and 3D	60 x 108	Electric Motor	Gates permit flow into the Mixed Liquor Conduit from Diffused Air Reactor No. 3 (in open position)
DAR-SG-4A	54 x 96	Electric Motor	Gate permits flow into Zone 1 of Diffused Air Reactor No. 4 (in open position)
DAR-SG-4B	54 x 96	Electric Motor	Gate permits flow into Zone 2 of Diffused Air Reactor No. 4 (in open position)
DAR-SG-4C and 4D	60 x 108	Electric Motor	Gates permit flow into the Mixed Liquor Conduit from Diffused Air Reactor No. 4 (in open position)
DAR-SG-1	12" Dia.	Handwheel	Permits dewatering of Diffused Air Reactor No. 1 (in open position)
DAR-SG-2	12" Dia.	Handwheel	Permits dewatering of Diffused Air Reactor No. 2 (in open position)
DAR-SG-3	12" Dia.	Handwheel	Permits dewatering of Diffused Air Reactor No. 3 (in open position)
DAR-SG-4	12" Dia.	Handwheel	Permits dewatering of Diffused Air Reactor No. 4 (in open position)
DAR-SG-5	6" Dia.	Handwheel	Permits dewatering of Diffused Air Reactors Weir Structure No. 1 (in open position)
DAR-SG-6	6" Dia.	Handwheel	Permits dewatering of Diffused Air Reactors Weir Structure No. 2 (in open position)
DAR-SG-7	6" Dia.	Handwheel	Permits dewatering of Diffused Air Reactors Weir Structure No. 3 (in open position)

(2) NORMAL OPERATION

Sluice Gates DAR-SG-1A through 4D are designed to be in the completely open or completely closed position. Each sluice gate is provided with a LOCAL/OFF/REMOTE selector switch and OPEN, CLOSE and STOP-LOCKOUT pushbuttons at each gate and OPEN and CLOSE pushbuttons on the Blower Building Control Panel (BBCP) in the Blower Building. Under plug flow operation, DAR-SG-1A, 2A, 3A and 4A will be open to allow influent wastewater into Zone 1 of the reactors and DAR-SG-1B, 2B, 3B and 4B will be closed. Under step feed operation, DAR-SG-1B, 2B, 3B and 4B will be open to allow influent wastewater into Zone 2 of the reactors and DAR-SG-1A, 2A, 3A and 4A will be closed. At least

one of each pari of gates, DAR-SG-1C, 1D, 2C, 2D, 3C, 3D, 4C and 4D, will be open whenever their associated reactors are in operation.

Under normal operation, the LOCAL/OFF/REMOTE selector switch at each gate will be in the REMOTE position for control at the BBCP.

Manually operated sluice gates DAR-SG-5 and 6 are normally closed and will only be opened when the Diffused Air Reactor Weir Structures are to be dewatered. Manually operated sluice gate DAR-SG-7 is normally closed and will only be opened to drain the water that has collected in future Diffused Air Reactor Weir Structure No. 3. Manually operated sluice gates DAR-SG-1 through 4 are normally closed and will only be opened when the Diffused Air Reactors are to be dewatered.

(3) START-UP AND SHUTDOWN PROCEDURES

To start-up or shutdown the motor operated sluice gates, use the following procedures:

a. START-UP

- Close the circuit breaker for the associated sluice gate on MCC-51A, MCC-52A, MCC-53A and MCC-54A in the Electrical Room of the Sludge Treatment Building
- Place the LOCAL/OFF/REMOTE selector switch at the gate in the REMOTE position
- Press the OPEN or CLOSE pushbutton at the Blower Building Control Panel

NOTE

Limit switches are provided to de-energize the motor operator when the gate arrives at the completely OPEN or CLOSED position.

b. SHUTDOWN

- Press the STOP pushbutton at the sluice gate

NOTE

If maintenance is to be performed on the unit, open the circuit breaker on the associated motor control center and engage the locking device on the STOP pushbutton. Follow approval **Lockout/Tagout** procedures (See Chapter VI, Safety).

(4) ALTERNATE OPERATION

a. LOCAL OPERATION

Each motor operator can be controlled at the sluice gate as follows:

- Place the LOCAL/OFF/REMOTE selector switch in the LOCAL position
- Press the OPEN or CLOSE pushbuttons at the unit

b. MANUAL OPERATION

Each motor operator is provided with a handwheel for manual operation as follows:

- Place the LOCAL/OFF/REMOTE selector switch in the OFF position
- Depress the motor operator declutching lever
- Turn handwheel counterclockwise to open or clockwise to close gate

NOTE

Energizing the motor operator automatically disengages the declutching lever and returns gate to motor operation.

(5) MONITORS AND ALARMS

Each motor operated sluice gate is provided with OPEN and CLOSE indicating lights and a position indicator at the unit and OPEN and CLOSED indicating lights on the Blower Building Control Panel.

Torque switches are provided to de-energize the motor operator if the gate movement becomes obstructed. Refer to Division 5H4 Contractor's O & M Manual for manufacturer's literature that describes the setting and operation of the torque switches.

The Remote Transmission Unit in the Control Room in the Blower Building continuously scans and transmits the condition of all status and alarm points to the SCADA system in the Process Control Room in the Main Pumping Station for the Sluice Gates.

F. SLIDE GATES: DAR-SLG-1 through 22

(1) DESCRIPTION (SEE FIGURE III-DA-DAR-1)

Slide Gates are provided in the Diffused Air Reactors to allow flow into the Influent Conduit and out of the Weir Structure, allow FBS to flow into the FBS Sumps and to dewater the Mixed Liquor Transfer Channel. Table III-DA-DAR-4 indicates the Contract Plan designation number, size, operator type and function of the slide gates.

TABLE III-DA-DAR-4 - FUNCTION OF SLIDE GATES

GATE CONTRACT PLAN DESIGNATION	SIZE (INCHES)	OPERATOR TYPE	FUNCTION
DAR-SLG-1	72 x 120	Electric Motor	Gate permits flow into Diffused Air Reactor No. 1 Influent Conduit (in open position)
DAR-SLG-2	72 x 120	Electric Motor	Gate permits flow into Diffused Air Reactor No. 2 Influent Conduit (in open position)
DAR-SLG-3	72 x 120	Electric Motor	Gate permits flow into Diffused Air Reactor No. 3 Influent Conduit (in open position)
DAR-SLG-4	72 x 120	Electric Motor	Gate permits flow into Diffused Air Reactor No. 4 Influent Conduit (in open position)

TABLE III-DA-DAR-4 - FUNCTION OF SLIDE GATES

GATE CONTRACT PLAN DESIGNATION	SIZE (INCHES)	OPERATOR TYPE	FUNCTION
DAR-SLG-5	12 x 18	Electric Motor	Gate permits flow into the FBS Collection Trough to FBS Pump DAR-FSP-1 from Diffused Air Reactor No. 1 (in open position)
DAR-SLG-6	12 x 18	Electric Motor	Gate permits flow into the FBS Collection Trough to FBS Pump DAR-FSP-2 from Diffused Air Reactor No. 2 (in open position)
DAR-SLG-7	12 x 18	Electric Motor	Gate permits flow into the FBS Collection Trough to FBS Pump DAR-FSP-2 from Diffused Air Reactor No. 3 (in open position)
DAR-SLG-8	12 x 18	Electric Motor	Gate permits flow into the FBS Collection Trough to FBS Pump DAR-FSP-3 from Diffused Air Reactor No. 4 (in open position)
DAR-SLG-9	12 x 24	Handwheel	Gate permits FBS removal from the Diffused Air Reactors Influent Channel and Influent Conduit No. 1 (in open position)
DAR-SLG-10	12 x 24	Handwheel	Gate permits FBS removal from the Diffused Air Reactors Influent Channel and Influent Conduit No. 2 (in open position)
DAR-SLG-11	12 x 24	Handwheel	Gate permits FBS removal from the Diffused Air Reactors Influent Channel and Influent Conduit No. 3 (in open position)
DAR-SLG-12	12 x 24	Handwheel	Gate permits FBS removal from the Diffused Air Reactors Influent Channel and Influent Conduit No. 4 (in open position)
DAR-SLG-13, 14, 15 and 16	30 x 80	Hand Crank	Gates permit flow into Mixed Liquor Transfer Channel No. 1 from Diffused Air Reactor Weir Structure No. 1 (in open position)
DAR-SLG-17, 18, 19 and 20	30 x 80	Hand Crank	Gates permit flow into Mixed Liquor Transfer Channel No. 2 from Diffused Air Reactor Weir Structure No. 2 (in open position)
DAR-SLG-21	6 x 6	Handwheel	Permits dewatering of Mixed Liquor Transfer Channel No. 1 (in open position)
DAR-SLG-22	6 x 6	Handwheel	Permits dewatering of Mixed Liquor Transfer Channel No. 2 (in open position)

(2) NORMAL OPERATION

Slide Gates DAR-SLG-1 through 4 are designed to be adjustable from the fully open to the fully closed position. Each sluice gate is provided with a LOCAL/OFF/REMOTE selector switch and OPEN, CLOSE and STOP-LOCKOUT pushbuttons at each gate and an OPEN/STOP/CLOSE selector switch and position indicator on the Blower Building Control Panel. Under normal operation, DAR-SLG-1, 2, 3 and 4 will be in the open position.

Slide Gates DAR-SLG-5 through 8 are designed to be in the fully open or fully closed position and allow Floating Biological Solids (FBS) to flow out of the Diffused Air Reactors and into the FBS sumps. The gates can be controlled locally and from the Blower Building Control Panel. Slide Gates DAR-SLG-9 through 12 are designed to be adjustable from the fully open to the fully closed position to allow FBS to be removed from the influent channel and influent conduit. The gates are manually operated at the units. For information on the controls, monitoring, and alarms for Slide Gates DAR-SLG-5 through 12, see the section herein headed "FBS Collection System".

Slide Gates DAR-SLG-13 through 20 are designed to be adjustable from the fully open to the fully closed position. Each slide gate is manually operated with a hand crank. Under normal operation, DAR-SLG-13 through 20 will be in the open position to allow flow into the Mixed Liquor Transfer Channels whenever Weir Structures No. 1 and 2 are in operation.

Slide Gates DAR-SLG-21 and 22 are designed to be in the fully open or fully closed position. The purpose of the gates is to allow liquid from the Mixed Liquor Transfer Channels to drain back to the Weir Structures for dewatering when in the open position. Each slide gate is manually operated with a handwheel at each unit. Under normal operation, the gates will be in the closed position whenever the Diffused Air Reactors are in operation.

(3) START-UP AND SHUTDOWN PROCEDURES

To start-up or shutdown the motor operated slide gates, use the following procedures:

a. START-UP

- Close the circuit breaker for the associated slide gate on MCC-51A, MCC-52A, MCC-53A and MCC-54A in the Electrical Room of the Sludge Treatment Building
- Place the LOCAL/OFF/REMOTE selector switch at the gate in the REMOTE position
- Place the OPEN/STOP/CLOSE selector switch on the Blower Building Control Panel in the OPEN or CLOSE position

NOTE

Limit switches are provided to de-energize the motor operator when the gate arrives at the completely OPEN or CLOSED position.

CAUTION

The opening of the slide gates DAR-SLG-1 through 4 allows the influent wastewater into the reactors. If filling an empty reactor, open the gate only partially at first to avoid a large rush of wastewater into the reactor and sweeping across the air diffusers mounted on the floor of the reactors. Once water is substantially above the level of the air diffusers, the influent gates may be fully opened.

b. SHUTDOWN

- Press the STOP pushbutton at the slide gate

NOTE

If maintenance is to be performed on the unit, open the circuit breaker on the associated motor control center and engage the locking device on the STOP pushbutton at the unit. Follow approved **Lockout/Tagout** procdures (See Chapter VI, Safety).

(4) ALTERNATE OPERATION

a. LOCAL OPERATION

Each motor operator can be controlled at the slide gate as follows:

- Place the LOCAL/OFF/REMOTE selector switch in the LOCAL position
- Press the OPEN or CLOSE pushbuttons at the gate

b. MANUAL OPERATION

Each motor operator is provided with a handwheel for manual operation as follows:

- Place the LOCAL/OFF/REMOTE selector switch in the OFF position
- Depress the motor operator declutching lever
- Turn handwheel counterclockwise to open or clockwise to close gate

NOTE

Energizing the motor operator automatically disengages the declutching lever and returns gate to motor operation.

(5) MONITORS AND ALARMS

Each motor operated gate is provided with OPEN and CLOSE indicator lights and a position indicator at each unit. Slide gates DAR-SLG-1, 2, 3 and 4 have horizontal bar graph position indicators on the Blower Building Control Panel. Slide Gates DAR-SLG-5 through 8 have OPEN and CLOSE indicating lights on the Blower Building Control Panel.

Torque switches are provided to de-energize the motor operator if the gate movement becomes obstructed. Refer to Division 5H4 Contractor's O & M Manual for manufacturer's literature that describes the setting and operation of the torque switches.

The Remote Transmission Unit in the Control Room in the Blower Building continuously scans and transmits the condition of all status and alarm points to the SCADA system in the Process Control Room in the Main Pumping Station for the Slide Gates.

G. RETURN SLUDGE RATE CONTROLLER EQUIPMENT: RSV-1, 2, 3 AND 4 AND FE-306, 307, 308 AND 309

(1) DESCRIPTION (SEE FIGURE III-DA-DAR-1)

The Return Sludge Rate Controller Equipment is provided to automatically distribute the return sludge flow evenly or in adjustable proportions to the Diffused Air Reactors. The Return Sludge Rate Controller Equipment consists of four manually controlled isolation knife gate valves, four magnetic flow meters, designated FE-306, 307, 308 and 309 and associated local flow transmitters, four motor operated butterfly valves, designated RSV-1, 2, 3 and 4, associated instrumentation on the Blower Building Control Panel (BBCP), piping and fittings.

Instrumentation on the BBCP includes four return sludge flow indicator controllers, designated FIC-306, 307, 308 and 309, four flow totalizers, designated FQ-306, 307, 308 and 309, four horizontal bar graph position indicators, designated ZI-306, 307, 308 and 309, one return sludge flow indicator, designated FI-323, and one return sludge master valve position controller, designated ZIC-323.

The Return Sludge Rate Controller Equipment works as follows: a) return sludge is pumped to the Diffused Air Reactors at a rate determined by the selected speed of each return sludge pump; b) return sludge is split at the head of Diffused Air Reactor Nos. 1, 2, 3 and 4 in proportions selected at flow indicating controllers FIC-306, 307, 308 and 309, respectively; c) magnetic flow meters FE-306, 307, 308 and 309 measure flow to each reactor; d) disc positions of butterfly valves RSV-1, 2, 3 and 4 are continuously monitored by the master valve position controller and adjusted to remain in an optimum position for balancing flows to each of the reactors.

NOTE

The total flow rate of the return sludge is controlled by varying the speed of the return sludge pumps located in Sludge Pumping Station Nos. 4 and 5. Refer to the chapter headed "Sludge Pumping Station Nos. 1, 2, 3, 4 and 5" for description and operation of return sludge pumps.

Flow meters FE-306, 307, 308 and 309 are 24-inch, in-line magnetic type flow meters with an operating range of 3.0 to 30 mgd and measure the return sludge flow to Diffused Air Reactor Nos. 1, 2, 3 and 4, respectively.

(2) NORMAL OPERATION

Return sludge valves, RSV-1, 2, 3 and 4, each have a UNIT/OFF/BBCP selector switch and OPEN, CLOSE and STOP-LOCKOUT pushbuttons located at the unit. Under normal operation, the UNIT/OFF/BBCP selector switch will be in the BBCP position and the butterfly valve will be automatically controlled by the instrumentation located at the BBCP. The instrumentation is designed to allow equally split the flow of return sludge to each reactor. A valve position is chosen at the master valve position controller at the BBCP. The actual valve position of each valve is compared to the selected valve position set point. The valves will all be positioned near to the set valve position and flows will be maintained to be equal to each reactor.

(3) START-UP AND SHUTDOWN PROCEDURES

To start-up or shutdown the Return Sludge Rate Control Equipment, use the following procedures:

a. START-UP

- Open the manually operated valves in the return sludge line
- Close the associated circuit breaker for the motor operated butterfly valves on MCC-51A, MCC-52A, MCC-53A and MCC-54A in the Electrical Room of the Sludge Treatment Building
- Place the UNIT/OFF/BBCP selector switch at each motor operated butterfly valve in the BBCP position
- Select a valve position at the master valve position controller at the BBCP, typically 60 percent open

b. SHUTDOWN

- Place the UNIT/OFF/BBCP selector switch at each motor operated butterfly valve in the OFF position

(4) ALTERNATE OPERATION

a. LOCAL OPERATION

Each butterfly valve can be controlled at the valve as follows:

- Place the UNIT/OFF/BBCP selector switch at each motor operated butterfly valve in the UNIT position
- Press the OPEN, CLOSE, or STOP pushbuttons at the valve

b. MANUAL OPERATION

Each valve is provided with a handwheel for manual operation as follows:

- Place the UNIT/OFF/BBCP selector switch at each motor operated butterfly valve in the OFF position
- Depress the motor operator declutching lever
- Turn handwheel counterclockwise to open or clockwise to close valve

NOTE

Energizing the motor operator automatically disengages the declutching lever and returns valve to motor operation.

(5) MONITORS AND ALARMS

The return sludge rate controller equipment can be monitored from the BBCP. The BBCP has flow indicators and totalizers for each flow meter, a total return sludge flow indicator, a horizontal bar graph position indicator for each motor operated butterfly valve and a return sludge master valve position control indicator. Each motor operated butterfly valve also has OPEN and CLOSE indicating lights and limit switches located at each valve.

The Remote Transmission Unit in the Control Room in the Blower Building continuously scans and transmits the condition of all status and alarm points to the SCADA system in the Process Control Room in the Main Pumping Station for the Return Sludge Controller Equipment.

H. MECHANICAL MIXERS: DAR-MM-1A through 4D

(1) DESCRIPTION (SEE FIGURES III-DA-DAR-1 AND 2)

Mechanical Mixers DAR-MM-1A through 4D have been provided in Zones 2, 3, 5 and 6 in each of the Diffused Air Reactors. These mixers are in place for use when the diffused air has been shut off when denitrifying in any of these zones. The mixers keep the solids in suspension and prevent settling in the reactors.

Mixers DAR-MM-1A, 1B, 2A, 2B, 3A, 3B, 4A and 4B have an 8-1/2 -inch diameter shaft and 8-foot 2-1/2-inch diameter blades, with a 60-hp motor and a speed of 45 rpm. Mixers DAR-MM-1C, 1D, 2C, 2D, 3C, 3D, 4C and 4D have an 8-1/2-inch diameter shaft and 7-foot 0-5/8-inch diameter blades, with a 50-hp motor and a speed of 56 rpm. Two anti-vortex baffles have been provided per mixer.

(2) NORMAL OPERATION

Mixers DAR-MM-1A, 1B, 1C, and 1D are provided with START, STOP, and TEST pushbuttons on Motor Control Center MCC-51. Mixers DAR-MM-2A, 2B, 2C, and 2D are provided with START, STOP, and TEST pushbuttons on Motor Control Center MCC-52. Mixers DAR-MM-3A, 3B, 3C, and 3D are provided with START, STOP, and TEST pushbuttons on Motor Control Center MCC-53. Mixers DAR-MM-4A, 4B, 4C, and 4D are provided with START, STOP, and TEST pushbuttons on Motor Control Center MCC-54. Motor Control Centers MCC-51, 52, 53 and 54 are located in the Electrical Room of the Sludge Treatment Building. Each mixer also has an ON/OFF-LOCKOUT selector switch and TEST pushbutton at the unit and START and STOP pushbuttons on the Blower Building Control Panel.

(3) START-UP AND SHUTDOWN PROCEDURES

To start-up or shutdown the Mechanical Mixers, use the following procedures:

a. START-UP

- Close the associated circuit breaker for the mechanical mixers on MCC-51, MCC-52, MCC-53 and MCC-54 in the Electrical Room of the Sludge Treatment Building

- Place the ON/OFF-LOCKOUT selector switch at the mixer in the ON position
- Press the START pushbutton on the associated Motor Control Center or the Blower Building Control Panel

b. SHUTDOWN

- Press the STOP pushbutton on the associated Motor Control Center or the Blower Building Control Panel

NOTE

If maintenance is to be performed on the unit, open the circuit breaker on the associated Motor Control Center, place the ON/OFF-LOCKOUT selector switch in the OFF position and engage the locking device. Follow approved **Lockout/Tagout** procdures (See Chapter VI, Safety).

(4) MONITORS AND ALARMS

Each mixer has running, off and alarm indicating lights and an elapsed time meter on its associated Motor Control Center MCC-51, 52, 53 and 54 and RUN and OFF indicating lights on the Blower Building Control Panel.

The Remote Transmission Unit in the Control Room in the Blower Building continuously scans and transmits the condition of all status and alarm points to the SCADA system in the Process Control Room in the Main Pumping Station for the Mechanical Mixers.

I. DIFFUSED AIR CONTROLLER EQUIPMENT: AV-1 through 6, FE-311 through 316 AND AIT-330 through 341

(1) DESCRIPTION (SEE FIGURES III-DA-DAR-1 AND 2)

The Diffused Air Controller Equipment is provided to automatically control and evenly distribute the diffused air in the Diffused Air Reactors. The Diffused Air Controller Equipment consists of six manually controlled air header isolation butterfly valves; six insert venturi meters, designated FE-311, 312, 313, 314, 315 and 316 and associated flow transmitters; six motor operated butterfly valves, designated AV-1, 2, 3, 4, 5, and 6; forty-eight air diffuser assembly grids with their associated pressure gauges and isolation valves; 12 dissolved oxygen probes and their associated transmitters, designated AIT-330/336, 331/337, 332/338, 333/339, 334/340, and 335/341 (for Zones 1, 2, 3, 4, 5 and 6, respectively, in Diffused Air Reactor Nos. 1 - 4); associated controller instrumentation on the Blower Building Control Panel (BBCP); piping and fittings.

Instrumentation on the BBCP includes twelve dissolved oxygen analyzer indicators; six diffused air flow indicators, designated FI-311, 312, 313, 314, 315 and 316; six horizontal bar graph position indicators, designated ZI-311, 312, 313, 314, 315 and 316; six ten-turn potentiometers, designated HC-311, 312, 313, 314, 315 and 316; and six controller selector switches.

The Diffused Air Controller Equipment works as follows: process air is supplied to Diffused Air Reactors from blowers located in the Blower Building; process air is split to Zones 1 - 6 in Diffused Air Reactors as required; insert venturi meters measure flow to each zone; and motor operated butterfly valves provide control of air flow to each zone. The 12 dissolved oxygen probes provide information on the dissolved oxygen level in each zone of each reactor. Typically, a target dissolved oxygen level will be chosen and the operator will adjust the air flow rate up or down to maintain the target dissolved oxygen level.

Six air header isolation valves are provided to isolate Zones 1, 2, 3, 4, 5 and 6 in Diffused Air Reactor Nos. 1 - 4. These manually operated butterfly valves are designed to be in the fully open or fully closed position. Air header isolation valves are 24, 24, 20, 20, 18 and 14 inches in diameter for Zones 1, 2, 3, 4, 5 and 6, respectively.

The six insert venturi meters, designated FE-311, 312, 313, 314, 315 and 316, are designed as follows:

METER	SIZE (inches)	DESIGN AVERAGE AIR FLOW (scfm)	DESIGN MAXIMUM AIR FLOW (scfm)
FE-311	24	8,000	13,000
FE-312	24	10,200	16,000
FE-313	20	6,400	10,000
FE-314	20	7,000	12,000
FE-315	18	5,250	9,000
FE-316	14	3,700	7,000

Six motor operated butterfly valves, designated AV-1, 2, 3, 4, 5 and 6, are provided for main air flow control for Zones 1, 2, 3, 4, 5 and 6, respectively, in the Diffused Air Reactors. When a designated zone is to be aerobic, the associated butterfly valve will be at least partially open. When a designated zone is to be anoxic, the associated butterfly valve will be closed.

Air diffusers are provided to evenly distribute the diffused air into the Diffused Air Reactors. There are a total of over 18,000 flexible membrane disc diffuser elements in the Diffused Air Reactors. The diffusers are 9-inches in diameter and the air flow per diffuser varies from 0.65 to 3.45 scfm depending on the zone where the diffuser is located and on the process demands. Each reactor has two diffuser grids per zone (48 total grids) and the number of diffusers per grid varies from about 245 to 540 depending on the oxygen requirements in each zone. Each diffuser grid is connected to a drop pipe that is fitted with a pressure gauge and a manually controlled isolation butterfly valve. The manually controlled isolation butterfly valves vary from 6 to 10 inches depending on the size and location of each drop pipe. Effluent water is also connected to each drop pipe.

NOTE

The effluent water valve on the connection to each air diffuser drop pipe is normally to be in the closed position. The effluent water is to be used only when air to a particular zone is to be turned off; during these conditions, a small amount of effluent water constantly flowing through the diffusers will help to prevent a biological build-up and fouling of the membranes when air is not being applied.

Twelve dissolved oxygen probes and their associated transmitters, designated AIT-330/336, 331/337, 332/338, 333/339, 334/340 and 335/341, monitor the dissolved oxygen (DO) level in Zones 1, 2, 3, 4, 5 and 6, respectively, in Diffused Air Reactor Nos. 1 - 4. Each probe and transmitter serves one zone in a pair of reactors (i.e., a probe located in Zone 1 of Reactor No. 1 can be easily moved to Zone 1 of Reactor No. 2 by means of a quick disconnect cable). Each analyzer has a DO operating range of 0 to 99.9 mg/L.

(2) NORMAL OPERATION

Air header isolation butterfly valves for Zones 1, 2, 3, 4, 5 and 6 are located on the riser section of the supply line to each zone (see Figure III-DA-DAR-2) and are provided with handwheels for manual operation. Under normal operation, these valves are in the fully open position for aerobic zones and fully closed position for anoxic zones where denitrification takes place.

Motor operated butterfly valves AV-1, 2, 3, 4, 5 and 6 are each provided with a UNIT/OFF/BBCP selector switch and OPEN, CLOSE and STOP-LOCKOUT pushbuttons at each unit. In addition, a COMPUTER/MANUAL selector switch, horizontal bar graph position indicator, and a ten-turn potentiometer are provided for each valve at the BBCP. Under normal operation, the UNIT/OFF/BBCP selector switch is in the BBCP position and the COMPUTER/MANUAL selector switch is in the MANUAL position. The valves will then be manually controlled by the ten-turn potentiometer located at the BBCP based on dissolved oxygen levels and measured air flow. Alkalinity information in the Diffused Air Reactors and sludge settling information may also be used to assist in the selection of the air flow rate. The design target dissolved oxygen level is 2.0 mg/l.

EXAMPLE

Should the measured D.O. level fall below the target for a particular zone, the associated valve may be opened wider at the BBCP. Depending on the air flow to the other zones, the total air supplied may also need to be increased to meet the oxygen demand in all zones. Air supply is controlled as described in the chapter headed "Blower Building".

NOTE

A poor settling sludge as measured by the SVI may be indicative of an air flow rate which is too low, regardless of whether the

target D.O. is being met or not. Poor settling sludge may suggest that a higher target D.O. should be used, at least on an interim basis.

Each drop pipe butterfly valve is provided with a handwheel operator for isolating its associated diffuser grid assembly. Under normal operation, each valve is in the fully open position for aerobic zones and in the fully closed position for anoxic zones or for reactors not in operation.

Each zone may be monitored for dissolved oxygen (DO) by a probe and analyzer. Under normal operation, only one zone per pair of reactors is monitored. The other zone may be monitored by relocating the probe from the first zone to the second zone by means of a quick disconnect cable. This would be done if a reactor were to be taken out of service.

(3) START-UP AND SHUTDOWN PROCEDURES

To start-up or shutdown the Diffused Air Controller Equipment, use the following procedures:

a. START-UP

- Open the appropriate air header isolation butterfly valve(s) for zone(s) to be aerated.
- Open the appropriate drop pipe isolation butterfly valve(s) for individual zone(s) to be aerated.
- Close the associated circuit breaker for the appropriate motor operated butterfly valve(s) on Motor Control Center MCC-82 in the Electrical Room of the Blower Building
- Place the UNIT/OFF/BBCP selector switch at the appropriate motor operated butterfly valve(s) in the BBCP position
- Place the COMPUTER/MANUAL selector switch at the BBCP for the appropriate motor operated butterfly valve(s) in the MANUAL position
- Start-up the Blower Equipment (refer to section titled "Blower Building")
- Make sure that the D.O. probes are located in the appropriate zones of the reactors
- Adjust the ten-turn potentiometer at the BBCP for the appropriate motor operated butterfly valve(s) until the desired air flow is met

b. SHUTDOWN

- Place the UNIT/OFF/BBCP selector switch at each motor operated butterfly valve in the OFF position

NOTE

If maintenance is to be performed on the unit, place the UNIT/OFF/BBCP selector switch in the OFF position, engage the locking device on the STOP pushbutton located at the unit and open the associated circuit breaker on MCC-82.

- Close the appropriate manually operated air header isolation valves or drop pipe isolation valves to shutdown process air to a set of zones or to an individual zone. Turn handwheel clockwise to close each valve

(4) ALTERNATE OPERATION

a. LOCAL OPERATION

Each motor operated butterfly valve can be operated as follows:

- Place the UNIT/OFF/BBCP selector switch at each motor operated buttefly valve in the UNIT position
- Depress the OPEN, CLOSE or STOP-LOCKOUT pushbuttons located at each valve

b. HANDWHEEL OPERATION

Each motor operated butterfly valve can be operated as follows:

- Place the UNIT/OFF/BBCP selector switch at each motor operated butterfly valve in the OFF position
- Depress the motor operator declutching lever
- Turn handwheel counterclockwise to open or clockwise to close valve

NOTE

Energizing the motor operator automatically disengages the declutching lever and returns valve to motor operation.

(5) AIR BUMPING PROCEDURES

As diffusers are used over a period of time, biological fouling will occur on the membranes which reduces the efficiency of the diffusers to transfer oxygen. Air bumping can be used to periodically remove the fouling material without removing reactors from service. The procedure can be done one grid a time as follows:

- Turn off the air to one grid, by closing the manually operated isolation valve, and allow the membrane to collapse back onto the diffuser holder.
- After a few moments, open the isolation valve to full open and allow two to three times the normal air flow rate to go to the grid being cleaned for several minutes. This stretches the membrane and opens the holes.
- Return the grid to normal operating conditions.

The air bumping procedure is typically performed on two- to four-week intervals.

(6) MONITORS AND ALARMS

The Diffused Air Controller Equipment can be mouitored from the Blower Building Control Panel (BBCP). The BBCP has a flow indicator for each insert venturi meter, a horizontal bar graph position indicator for each motor operated butterfly valve, and one dissolved oxygen indicator for each zone for

each pair of reactors (twelve total indicators). Each motor operated butterfly valve is also provided with OPEN and CLOSE indicating lights located at each valve.

Torque switches are provided to de-energize each motor operator if the valve movement becomes obstructed. Refer to Division 5H4 Contractor's O&M Manual for manufacturer's literature that describes the setting and operation of the torque switches.

The Remote Transmission Unit in the Control Room in the Blower Building continuously scans and transmits the condition of all status and alarm points to the SCADA system in the Process Control Room in the Main Pumping Station for the Diffused Air Controller Equipment.

J. METHANOL FEED CONTROLLER EQUIPMENT: MFV-1 through 4 AND FE-380 through 38

(1) DESCRIPTION (SEE FIGURES III-DA-DAR-1 AND 2)

Methanol can be added to Zones 5 and 6 in each of the Diffused Air Reactors as a food source for the denitrifying bacteria needed in the denitrification process. The purpose of this system is to provide a means of performing denitrification in the Diffused Air Reactors while operating in the series mode. The function of the system is to allow a means to remove some of the nitrogen from the wastewater and to reduce the amount of nitrate applied to the Denitrification Filters.

The methanol feed controller equipment found in the Diffused Air Reactors includes: four motor operated butterfly valves, designated MFV-1, 2, 3 and 4, four magnetic flow meters, designated FE-380, 381, 382 and 383, manually operated valves, piping and fittings. The magnetic flow meters, FE-380, 381, 382 and 383, have an operating range of 10 to 30 gpm. MFV-1, 2, 3 and 4 are located in Zone 5 of Diffused Air Reactors No. 1, 2, 3 and 4, respectively, and have a UNIT/OFF/BBCP selector switch and OPEN, CLOSE and STOP pushbuttons located at each valve.

A ten-turn potentiometer is located at the Blower Building Control Panel along with flow indicator FI-41. Both are linked to equipment at the Chemical Handling Facility. The potentiometer controls the output of the selected methanol feed pump at the Chemical Handling Facility. FI-41 shows the total flow output by the selected methanol feed pump available to the reactors. The methanol must be diluted before it reaches the reactors. This dilution occurs by opening the dilution water valve in the lower level of the Blower Building.

NOTE

The dilution water valve carrying effluent water must be left open at all times while methanol is being applied to the reactors.

Pumps CH-MFP-1 and 2 are available to pump methanol from the Chemical Handling Facility to the Diffused Air Reactors (see the chapter headed "Chemical Handling Facility"). When the plant is operated in the parallel mode of operation, these pumps are required to provide methanol to the Nitrified Effluent Filters from Final Sedimentation Tanks No. 1-12. When the plant is operated in the series mode, there is no flow in the Nitrified Effluent Conduit and the methanol feed pumps, CH-MFP-1 and 2, are available.

A manually operated plug valve and a manually operated gate valve are provided for isolating the undiluted methanol feed line from the Chemical Handling Facility (see Figure III-FL-CHF-1). Plug valves are located at the Chemical Handling Facility which allow the flow from the methanol feed pumps to be discharged to the Nitrified Effluent Conduit or to the Diffused Air Reactors. Selector switches are available at the Methanol Pump Control Panel at the Chemical Handling Facility to select pump CH-MFP-1 or 2 as the duty pump and to allow control from the Filter Building No.1 controls or from the BBCP.

A gate valve on the undiluted methanol line is located in the Blower Room of the Blower Building and is designed to isolate the methanol line. A check valve, gate valve, and pressure reducing valve on the effluent water line are located in the Blower Room.

The amount of methanol to be delivered to the reactors can be calculated in the same way described in the chapter headed "Denitrification Filters" and is based on the quantity of nitrate produced in the reactors upstream of Zones 5 and 6. Since the purpose of the system is only to remove some of the nitrogen, the quantity of methanol selected should be less than the quantity of methanol calculated to be needed for complete nitrate removal. Only manual control of the methanol has been provided. Therefore, the amount of methanol to be selected should be substantially less than (perhaps half of) the calculated demand.

The amount of methanol solution (methanol and water) is selected at each flow meter FE-380, 381, 382 and 383. The flow rate of methanol solution selected in total should be substantially more than the flow rate of undiluted methanol selected by the 10-turn potentiometer. Typically, the flow rate selected at the flow indicating controllers can be set at one time, perhaps at 20 gpm each, and seldom adjusted. As the quantity of undiluted methanol is adjusted at the 10-turn potentiometer, the concentration of methanol solution will automatically change.

(2) NORMAL OPERATION

The Methanol Feed Controller Equipment will only be operating when either Zones 5 and 6 or in Zone 6 only in each of the Diffused Air Reactors are run in an anoxic, denitrifying state during series operation.

The undiluted methanol feed rate may be controlled automatically from Filter Building No. 1 or manually from the BBCP. The method of control is determined by the METER/DAR selector switch, designated HS-384, located on the Meter Pump Control Panel in the Chemical Handling Facility. When the METER/DAR selector switch is in the METER position, a flow signal from Filter Building No. 1 controls the speed of the methanol feed pumps CH-MFP-1 and 2. This position is used when it is desired to feed methanol into the Nitrified Effluent Conduit. When the METER/DAR selector switch is in the DAR position, the methanol feed pumps are controlled by the ten-turn potentiometer, designated HC-384, at the BBCP. This position is selected when it is desired to feed methanol into the Diffused Air Reactors. Under series operation, when denitrifying at the Diffused Air Reactors, the METER/DAR selector switch will be in the DAR position and the selected methanol feed pump will be controlled by the ten-turn potentiometer at the BBCP.

The diluted methanol solution feed rate into Zones 5 or 6 is selected at flow indicating controllers FIC-380, 381, 382 and 383 for Diffused Air Reactor Nos. 1, 2, 3 and 4, respectively. The diluted methanol solution feed rate should be substantially more than the flow rate of undiluted methanol selected by the ten-turn potentiometer. Typically, the flow rate selected at the flow indicating controllers can be set one time, perhaps at 20 gpm each, and periodically adjusted as required. Each flow controller at the BBCP should be set to the same flow rate which will provide an even distribution of methanol solution to each reactor. The relatively high flow allows hydraulically for an even flow of methanol solution through the diffuser pipe and across the width of the reactors. The concentration of the diluted methanol solution will change automatically as the undiluted methanol feed rate is adjusted by the ten-turn potentiometer. The controller equipment will provide an even flow of diluted methanol solution to each of the four Diffused Air Reactors with total diluted methanol solution flow determined by the total of the selected flow at the indicating controllers.

The quantity of methanol feed to the reactors is selected based on the amount of nitrate formed in the upstream portion of the reactors. The purpose of this system is to lower the effluent nitrate concentration but not necessarily to lower it to effluent permit levels. Downstream Denitrification Filters are available for final nitrate removal. An example of how to set up and control the methanol feed rate is as follows:

GIVEN:
Nitrate concentration in mixed liquor (NO_3) = 12.0 mg/l
Ratio of M/N = 3.0 (typical)
Mixed liquor flow rate (Q_{ML}) = 100 mgd

THEN:
Quantity of NO_3 to denitrification = 12.0 mg/l * 100 mgd * 8.34 = 10,008 lb/day
= 417 lb/hr
Quanity of undiluted methanol required = 417 lb/hr-NO_3 * 3.0 = 1251lb/hr-methanol
Volume of undiluted methanol required = 1251 lb/hr-methonal ÷ 6.63 lb/gal
= 189 gal/hr = 3.1 gpm

CONCLUSION:
In the above example, a flow rate of 189 gal/hr (3.1 gpm) is calculated for complete denitrification. However, it is not desired to completely denitrify in this system and it is unacceptable to over feed methanol since this could pass on through the denitrification filters and appear as BOD in the plant effluent. For these reasons, a methanol feed rate of half of the theoretical value could be chosen so that a rate of about 95 gal/hr (1.6 gpm) would be selected at the 10-turn potentiometer controlling methanol flow. If a rate of 20 gpm of methanol solution (methanol plus effluent water) is selected for each reactor, a total of 80 gpm of methanol solution would be fed to the four reactors. The methanol solution would be made up of 1.6 gpm of methanol and 78.4 gpm (80 - 1.6) of effluent water.

Later, if nitrate levels were to decrease, the feed rate of the undiluted methanol could be decreased. If it were decreased to 72 gal/hr (1.2 gpm) and the methanol solution rate remained unchanged, then the methanol solution would be made up of 1.2 gpm of methanol and 78.8 gpm (80 - 1.2) of effluent water.

Motor operated butterfly valves MFV-1, 2, 3 and 4 have a LOCAL/OFF/REMOTE selector switch and OPEN, CLOSE and STOP-LOCKOUT pushbuttons located each valve. Under series operation, when denitrifying, the LOCAL/OFF/REMOTE selector switch for the butterfly valves will be in the REMOTE position and the valves will automatically modulate as required to maintain the flow rate set point entered at each flow indicating controller.

The undiluted methanol feed line plug valve at the Chemical Handling Facility and the gate valve at the Blower Building are provided with handwheel operators for isolating the feed line. Under series operation, when denitrifying, both valves will be in the fully open position.

The effluent dilution water gate valve at the Blower Building is provided with a handwheel operator for isolating effluent water. The pressure reducing valve at the Blower Building is provided with adjustable settings. The pressure reducing valve should be set at the desired pressure for the methanol solution line.

NOTE

The effluent water dilution valve must remain open at all times while methanol is being applied to the Zones 5 or 6 of the reactors.

Isolation ball valves for controlling the methanol solution flow into Zones 5 or 6 of the Diffused Air Reactors are provided with lever operators.

(3) START-UP AND SHUTDOWN PROCEDURES

To start-up or shutdown the Methanol Feed Controller Equipment, use the following procedures:

a. START-UP

- Open the dilution water valve in the lower level of the Blower Building
- Open the manually operated valves in the methanol feed line at the Diffused Air Reactors, Blower Building, and at the Chemical Handling Facility
- Close the manually operated valve at the Chemical Handling Facility
- Close the associated circuit breakers for the motor operated butterfly valves on MCC-53A in the Electrical Room of the Sludge Treatment Building
- Place the UNIT/OFF/BBCP selector switch at each motor operated butterfly valve in the BBCP position
- Set flow indicating controllers FIC-380, 381, 382 and 383 on the Blower Building Control Panel for the desired flow rate of methanol solution to each reactor
- Place the selected Methanol Feed Pump at the Chemical Handling Facility in the ON position (refer to the section headed "Chemical Handling Facilities" for further information on the operation of the Methanol Feed Pumps)

- Set the 10-turn potentiometer at the Blower Building Control Panel for the desired total methanol flow

b. SHUTDOWN

- Place the selected Methanol Feed Pump at the Chemical Handling Facility in the OFF position
- Place the UNIT/OFF/BBCP selector switch at each motor operated butterfly valve in the OFF position

(4) ALTERNATE OPERATION

a. LOCAL OPERATION

Each butterfly valve can be controlled at the valve as follows:

- Place the UNIT/OFF/BBCP selector switch at each motor operated butterfly valve in the UNIT position
- Press the OPEN or CLOSE pushbuttons at the valve

b. MANUAL OPERATION

Each valve is provided with a handwheel for manual operation as follows:

- Place the UNIT/OFF/BBCP selector switch at each motor operated butterfly valve in the OFF position
- Depress the motor operator declutching lever
- Turn handwheel counterclockwise to open or clockwise to close valve

NOTE

Energizing the motor operator automatically disengages the declutching lever and returns valve to motor operation.

(5) MONITORS AND ALARMS

The methanol feed controller equipment can be monitored from the Blower Building Control Panel (BBCP). The BBCP has flow monitors for each flow meter, a total methanol flow indicator and a methanol feed system running indicator light. Each motor operated butterfly valve also has OPEN and CLOSE indicating lights and limit switches located at each valve.

The Remote Transmission Unit in the Control Room in the Blower Building continuously scans and transmits the condition of all status and alarm points to the SCADA system in the Process Control Room in the Main Pumping Station for the Methanol Feed Controller Equipment.

K. FBS COLLECTION SYSTEM: DAR-FSP-1, 2 AND 3, DAR-SLG-5 through 12 AND SWV-1A, 1B, 2A, 2B, 3A, 3B, 4A AND 4B

(1) DESCRIPTION (SEE FIGURE III-DA-DAR-1)

The FBS Collection System is provided in the Diffused Air Reactors for removal of any Floating Biological Solids (or scum) that may form on the surface of the mixed liquor in the reactors.

The FBS Collection System consists of three FBS pumps, designated DAR-FSP-1, 2 and 3, four motor operated FBS slide gates, designated DAR-SLG-5, 6, 7 and 8, eight FBS spray water solenoid valves, designated SWV-1A, 1B, 2A, 2B, 3A, 3B, 4A and 4B, two FBS tilting weirs, four manually operated slide gates, designated DAR-SLG-9, 10, 11 and 12, and associated controller instrumentation on the Blower Building Control Panel (BBCP).

Instrumentation on the BBCP includes one idle timer, designated KC-T0, one pre-spray timer, designated KC-T1, one slide gate/spray timer, designated KC-T2, and one post-spray timer, designated KC-T4. Additional instrumentation on the BBCP includes OPEN and CLOSE pushbuttons for slide gates DAR-SLG-5, 6, 7 and 8, ON and OFF pushbuttons for spray water valves SWV-1A and 1B, 2A and 2B, 3A and 3B, and 4A and 4B, and four HAND/TIMER/OUT OF SERVICE selector switches which control the operation of the FBS Collection System in Diffused Air Reactor Nos. 1, 2, 3 and 4, respectively.

The FBS Collection System operates simultaneously at each reactor in service as follows:

- Spray water valves SWV-1A - 4B open and effluent water is dispersed through spray water nozzles located above the collection trough for a length of time determined by the pre-spray timer. The spray water breaks down any foam that collects in the trough
- After the pre-spray timer has timed out, slide gates DAR-SLG-5 - 8 open and spray water is applied for a length of time determined by the slide gate/spray timer. FBS flow over the tipping weirs and into the FBS sump where it is pumped into the effluent conduit of the Diffused Air Reactors
- After the slide gate/spray timer has timed out, slide gates DAR-SLG-5 - 8 close and spray water is applied for a length of time determined by the post-spray timer
- After the idle timer has timed out, the FBS Collection System sequence will begin again

FBS pumps DAR-FSP-1, 2 and 3 are centrifugal vortex type, submersible pumps rated for 300 gpm at a head of 18 feet and driven by constant speed 3 hp electric motors. The pumps discharge the collected FBS to the Mixed Liquor Conduit. Each FBS pump is provided with liquid level float controls (to automatically start and stop the pump).

NOTE

FBS pumps DAR-FSP-1, 2 and 3 meet the requirements for Class I, Division 1, Groups C and D, explosion-proof equipment and wiring.

FBS slide gates DAR-SLG-5, 6, 7 and 8 provide FBS flow control from the FBS collection troughs to the FBS sumps (where FBS pumps are located) in Diffused Air Reactor Nos. 1, 2, 3 and 4, respectively. Each

slide gate is 12 x 18 inches in size and is provided with an electric motor operator for automatic operation and a handwheel for manual operation.

Spray water valves SWV-1A, 1B, 2A, 2B, 3A, 3B, 4A, and 4B are solenoid actuated valves that control the use of spray water (plant effluent water) in the FBS collection troughs. SWV-1A and 1B service Diffused Air Reactor No. 1, SWV-2A and 2B service Diffused Air Reactor No. 2, SWV-3A and 3B service Diffused Air Reactor No. 3, and SWV- 4A and 4B service Diffused Air Reactor No. 4. SWV-1A, 2B, and 3A are 1 1/2-inch in diameter, SWV-4A and 4B are 2-inch in diameter, and SWV-1B, 2A, and 3B are 2 1/2-inch in diameter. Each set of valves (SWV-1A and 1B, 2A and 2B, 3A and 3B, and 4A and 4B) is designed for automatic operation.

Tilting weirs are provided to control flow from each of the Diffused Air Reactors into the FBS collection troughs.

FBS slide gates DAR-SLG-9, 10, 11 and 12 provide FBS flow control from the upstream end of the Diffused Air Reactor influent conduits to Diffused Air Reactor Nos. 1, 2, 3 and 4, respectively, to the FBS collection troughs. Each slide gate is 12 x 24 inches in size and is provided with a handwheel for manual operation. If floatable material accumulates in this upstream area, the slide gates can be lowered manually to allow the floatables into the reactors.

(2) NORMAL OPERATION

FBS pumps DAR-FSP-1, 2 and 3 are provided with an ON/OFF-LOCKOUT selector switch and a TEST pushbutton and liquid level float controls located at each unit. Under normal operation, the pumps will automatically start and stop in response to changes in the sump liquid level.

FBS slide gates DAR-SLG-5, 6, 7 and 8 are designed to be in the fully open or fully closed position. Each slide gate is provided with a LOCAL/OFF/REMOTE selector switch and OPEN, CLOSE and STOP pushbuttons at each gate and an OPEN and CLOSE pushbuttons on the BBCP. Under normal operation, the LOCAL/OFF/REMOTE selector switch will be in the REMOTE position and the slide gates will be operated based on the timer settings at the BBCP.

Spray water valves SWV-1A, 1B, 2A, 2B, 3A, 3B, 4A and 4B are designed to be in the fully open or fully closed position. Each set of valves (SWV-1A and 1B, 2A and 2B, 3A and 3B, and 4A and 4B) are provided with ON and OFF pushbuttons on the BBCP. Under normal operation, the valves will be operated based on the timer settings at the BBCP.

Tilting weirs are provided with a manual hand crank. Under normal operation, the tilting weirs will be set at the same elevation in each tank based on the water level in the Diffused Air Reactors. The weirs are designed to be fully adjustable from elevation 23 feet 11 inches to 25 feet 0 inches depending upon the water level in the Diffused Air Reactors. Each tilting weir designed for manual operation. The tilting weirs should be set at an elevation which appears to collect the FBS effectively without carrying too much liquid, which may flood the FBS sump.

NOTE

If the liquid level in the diffused air reactors is so low that the FBS cannot be collected over the weir, the water level can be raised by closing one of the two reactor effluent sluice gates and throttling the remaining sluice gate as necessary to obtain the sufficient water level.

FBS slide gates DAR-SLG-9, 10, 11 and 12 are designed to be adjustable from the fully open to the fully closed position. Each slide gate is provided with a handwheel for manual operation. Under normal operation, each slide gate will be adjusted to a given elevation based on the water level in the influent channel, influent conduit, and reactor and the amount of FBS present in the influent channel and influent conduit.

(3) START-UP AND SHUTDOWN PROCEDURES

To start-up or shutdown the FBS Collection System, use the following procedures:

a. START-UP

- Adjust the position of the tilting weirs as required.
- Close the associated circuit breaker(s) for the appropriate pump(s) DAR-FSP-1, 2 and 3 and motor operated slide gate(s) DAR-SLG-5, 6, 7 and 8 on Motor Control Centers MCC-51A, 52A and 54A in the Electrical Room of the Sludge Treatment Building
- Place the LOCAL/OFF/REMOTE selector switch at the appropriate FBS slide gate(s) in REMOTE position
- Set the idle timer at the BBCP for the desired duration (0-24 hrs)
- Set the pre-spray timer at the BBCP for the desired duration (0-10 min)
- Set the slide gate/spray timer at the BBCP for the desired duration (0-10 min)
- Set the post-spray timer at the BBCP for the desired duration (0-10 min)
- Place the HAND/TIMER/OUT OF SERVICE selector switch at the BBCP in the TIMER position

b. SHUTDOWN

- Place the HAND/TIMER/OUT OF SERVICE selector switch at the BBCP in the OUT OF SERVICE position.

NOTE

If maintenance is to be performed on a pump, engage the locking device on the ON/OFF-LOCKOUT selector switch and open the associated circuit breaker on MCC-51A, 52A and 53A in the Electrical Room of the Sludge Treatment Building

(4) ALTERNATE OPERATION

a. HAND OPERATION

The FBS Collection System can be controlled by hand as follows:

- Place the HAND/TIMER/OUT OF SERVICE selector switch at the BBCP in the HAND position
- Depress the ON or OFF pushbuttons at the BBCP for the appropriate spray water valves SWV-1A, 1B, 2A, 2B, 3A, 3B, 4A and 4B as required
- Depress the OPEN or CLOSE pushbuttons at the BBCP for the appropriate slide gate(s) DAR-FBS-5, 6, 7 and 8 as required

b. LOCAL OPERATION

Each motor operated slide gate can be controlled at the unit as follows:

- Place the LOCAL/OFF/REMOTE selector switch at the unit in the LOCAL position
- Press the OPEN, CLOSE or STOP pushbuttons at the unit as required

c. MANUAL OPERATION

Each motor operated slide gate can be controlled at the unit as follows:

- Place the LOCAL/OFF/REMOTE selector switch at the unit in the OFF position
- Depress the motor operator declutching lever
- Turn the handwheel counterclockwise to open or clockwise to close gate

(5) MONITORS AND ALARMS

The FBS pumps are provided with RUN and OFF indicating lights at the Blower Building Control Panel (BBCP). The motor operated FBS slide gates are provided with OPEN and CLOSED indicating lights at each unit and at the BBCP. Each pair of spray water valves is provided with ON and OFF indicating lights on the BBCP.

The Remote Transmission Unit in the Control Room in the Blower Building continuously scans and transmits the condition of all status and alarm points to the SCADA system in the Process Control Room in the Main Pumping Station for the FBS Collection System.

L. ALKALINITY MONITORING SYSTEM: DAR-SP-1A, 1B, 2A, 2B, 3A, 3B, 4A AND 4B AND NPS-SP-5

(1) DESCRIPTION (SEE FIGURE III-DA-DAR-1)

The Alkalinity Monitoring System is provided with the Diffused Air Reactors to measure the change in the alkalinity levels of the mixed liquor as it passes through the reactors. Nitrification consumes alkalinity proportionally to the amount of ammonia nitrified, therefore alkalinity measurement at various locations in the reactor provides information regarding the degree of nitrification. Denitrification adds alkalinity proportionally to the amount of nitrate denitrified, therefore alkalinity measurement in anoxic zones provides information on the degree of denitrification.

The Alkalinity Monitoring System consists of nine sample pumps, designated DAR-SP-1A, 1B, 2A, 2B, 3A, 3B, 4A, and 4B and NPS-SP-5, an Alkalinity Monitoring Station containing filtration, sequencing,

electronic communication and analyzer equipment, a central control processor system for data acquisition, storage, manipulation and display, piping, manually operated valves, pressure gauges and fittings.

Each sample pump, DAR-SP-1A, 1B, 2A, 2B, 3A, 3B, 4A, and 4B and NPS-SP-5 is a centrifugal type, submersible grinder pump rated for 40 gpm at a head of 64 feet and driven by a constant speed 2.7 hp electric motor. Sample pump NPS-SP-5 is located in the Diffused Air Reactors influent conduit. Sample pumps DAR-SP-1A, 2A, 3A and 4A are located in the effluent end of Zone 4 of Diffused Air Reactor Nos. 1, 2, 3 and 4, respectively. Sample pumps DAR-SP-1B, 2B, 3B and 4B are located in the effluent end of Zone 6 of Diffused Air Reactor Nos. 1, 2, 3 and 4, respectively. A portable hoist is provided for sample pump removal.

The Alkalinity Monitoring System operates as follows: sample pumps supply mixed liquor samples continuously to the Alkalinity Monitoring Station; the samples pass through filters to remove particulate matter; the filtrate flows into the sample collection reservoir with continuous overflow to the channel below; samples are analyzed by an automatic microprocessor-controlled analyzer; analysis results are sent to the central control processor system located in the Blower Building. The alkalinity levels in the reactors are used in conjunction with air flow rates, air header pressure and dissolved oxygen levels to provide information for adjusting blower inlet valves BIV-1, 2, 3 and 4 and Diffused Air Controller Equipment valves AV-1, 2, 3, 4, 5 and 6. Refer to the section titled "Blower Building" for information on the operation of the blower inlet valves. Refer to the subsection herein titled "Diffused Air Controller Equipment" for information on the operation of the air valves.

Each sample line is provided with a sample collection filter of the tubular crosscurrent design with bypass. The filter removes particulate matter from the sample for further analysis. A multi-stream sequencing unit is provided for control of sample stream analysis and includes solenoid valves, rotometers, and sample reservoirs. An analyzer is provided for continuous monitoring and reporting of alkalinity values. A titrant reservoir is included for analysis purposes. This equipment is located in the Alkalinity Monitoring Station.

The central control processor system includes a central processor unit, miscellaneous software packages, monitor, keyboard and printer. This system is located in the Blower Building and allows automatic control of the Alkalinity Monitoring System.

NOTE

Refer to the Division 5H4 Manufacturer's O&M Manual for further information on the equipment for the Alkalinity Monitoring System and for alkalinity testing procedures.

Manually operated butterfly valves are provided on the sample lines in the Diffused Air Reactors and are used to isolate each sample line. The butterfly valves are 2 inches in diameter and are designed to be in the fully open or fully closed position.

(2) NORMAL OPERATION

Sample pumps DAR-SP-1A and 1B, 2A and 2B, 3A and 3B, and 4A and 4B each have an ON/OFF selector switch located at MCC-51A, 52A, 53A and 54A, respectively, in the Electrical Room of the Sludge Treatment Building. Each sample pump also has START pushbutton and ON/OFF-LOCKOUT selector switch located near each unit. Under normal operation, the ON/OFF selector switch will be in the ON position and the pump will be manually started at the unit and allowed to run continuously.

The samples are continuously pumped through the sample filter system in the Alkalinity Monitoring Station. Samples are filtered and periodically and regularly delivered automatically to an on-line titration system for measurement of alkalinity. The resulting information is sent to the Central Control Processor for reporting and analysis.

Ball valves for isolating each sample line are provided with handle operators. Under normal operation, each ball valve will be fully open for those reactors in operation and fully closed for those reactors off-line.

(3) START-UP AND SHUTDOWN PROCEDURES

To start-up or shutdown the Alkalinity Monitoring System, use the following procedures:

a. START-UP

- Open the ball valve(s) on the appropriate sample lines.
- Close the associated circuit breaker(s) for the appropriate sample pump(s) on MCC-51A, 52A, 53A and 54A
- Place the ON/OFF selector switch at the associated Motor Control Center in the ON position
- Start-up the control equipment at the Alkalinity Monitoring Station and the Blower Building. Refer to Contractor's O&M Manual for instructions on control equipment operation.

b. SHUTDOWN

- Place the ON/OFF selector switch at the associated Motor Control Center in the OFF position

NOTE

If maintenance is to be done on a sample pump, place the ON/OFF selector switch at the appropriate unit in the OFF position and place a lock on the switch and open the associated circuit breaker at the appropriate Motor Control Center.

(4) ALTERNATE OPERATION

Each sample pump can be manually controlled near the unit as follows:

- Place the ON/OFF selector switch at the appropriate Motor Control Center in the ON position
- Press the START or STOP pushbuttons near the unit as required.

(5) MONITORS AND ALARMS

Each sample pump, DAR-SP-1A, 1B, 2A, 2B, 3A, 3B, 4A and 4B and NPS-SP-5, has a running indicator light on its associated Motor Control Center MCC-51A, 52A, 53A and 54A in the Electrical Room of the Sludge Treatment Building

The Remote Transmission Unit in the Control Room in the Blower Building continuously scans and transmits the condition of all status and alarm points to the SCADA system in the Process Control Room in the Main Pumping Station for the Alkalinity Monitoring System.

M. PLANT AIR (SEE FIGURES III-SU-UPS-1 THROUGH 3)

Plant Air from the Main Pumping Station is provided in various areas of the Diffused Air Reactors. The associated equipment found in the Diffused Air Reactors consists of piping and fittings, valves, and moisture separators.

N. EFFLUENT WATER (SEE FIGURES III-SU-UPS-5 THROUGH 9)

The effluent water equipment in the Diffused Air Reactors consists of piping and fittings, shutoff valves and hose hydrants.

Effluent water is supplied to the Diffused Air Reactors by the General Purpose Effluent Water Pumps as described in the section headed "Filter Building and Nitrified Effluent Conduit."

The effluent water is used for washing down the Diffused Air Reactors and provides spray water for the FBS collection system. For information on control of the spray water see the subsection herein titled "FBS Collection System."

O. POWER DISTRIBUTION

The power distribution system is shown in detail on the contract plans and various shop drawings. Refer to Table III-DA-DAR-1, Diffused Air Reactors - Facility Equipment Summary for contract plan and shop drawing numbers which pertain to the power distribution system.

III-DA-BB - BLOWER BUILDING (058)

A. GENERAL

The Blower Building contains the following equipment and systems:

- Blower Equipment
- Blower Building Control Panel
- Rolling Overhead Door
- Hoisting Equipment
- Plant Air
- Plant Water
- City Water
- Grinder Pump Station
- Water Heater
- Effluent Water
- Plant Air
- Ventilation and Air Conditioning Equipment
- Power Distribution

The Blower Building is located north of the Diffused Air Reactors. The main purpose of the Blower Building is to house the blowers which provide air for use in the Diffused Air Reactors. The Blower Building is also the location of much of the control equipment for the Diffused Air Reactors, including: Motor Control Center MCC-82, Nitrification Pump Control Panel ASCC-83, Blower Control Panel MVMCC-80 and the Blower Building Control Panel (BBCP).

B. BLOWER EQUIPMENT: BB-MCB-1, 2, 3 AND 4, BIV-1, 2, 3 AND 4 AND ABV-1

(1) DESCRIPTION (SEE FIGURE III-DA-BB-1)

The blower equipment is provided to furnish air for the Diffused Air Reactors for use in the activated sludge process. The blower equipment includes: four process air blowers, designated BB-MCB-1, 2, 3 and 4, four motor operated blower inlet valves, designated BIV-1, 2, 3 and 4, one air blow-off assembly consisting of an air blow-off valve designated ABV-1, and silencer, one air release valve designated ARV-1, four manually operated blower discharge valves, and piping and fittings. Each process air blower consists of an intake filter silencer, air compressor, drive unit, flexible coupling, pressure gauge, manometer, pressure switch, local control panel and associated control instrumentation. Additional control instrumentation is provided on Blower Control Panel MVMCC-80 and on the Blower Building Control Panel (BBCP).

The blower equipment works as follows: the plant operator manually starts the required number of process air blowers; the operator adjusts the position of valves BIV-1, 2, 3 and 4 and valves AV-1, 2, 3, 4, 5 and 6 (Diffused Air Controller Equipment) based on the amount of air required by the process, air header pressure, and dissolved oxygen levels and alkalinity measurements in the Diffused Air Reactors.

NOTE

The blower equipment is used in conjunction with the Alkalinity Monitoring System and the Diffused Air Controller Equipment for supplying process air to the Diffused Air Reactors. Refer to the chapter headed "Diffused Air Reactors" containing the sections titled "Diffused Air Controller Equipment" and "Alkalinity Monitoring System" for operation of this equipment.

Blower inlet valves BIV-1, 2, 3 and 4 are 30-inch motor operated butterfly valves designed to modulate influent filtered air to BB-MCB-1, 2, 3 and 4, respectively. It is through valves BIV-1 through 4 that the output of the blowers is controlled. The throttling of the control valves reduces the inlet pressure to the blower and causes a reduced output.

Air blow-off valve ABV-1 is a 12-inch motor operated butterfly valve designed to be manually modulated to release any excess process air not required by the process or to reduce system pressure to provide flexibility. The air blow-off valve assembly is supplied with a silencer.

Air release valve ARV-1 is a 24-inch manually operated angle-elbow valve designed to modulate to maintain a preset back pressure in the air piping system. The pressure setting is controlled by a weighted piston assembly which consists of a piston fitted with counterweights. The weighted piston assembly is fully adjustable and capable of maintaining system back pressures from 9.2 psig to 10.0 psig in 0.1 psig increments. ARV-1 relieves system pressure and is designed to protect the air diffusers from high pressure as might occur if too many blowers were on and several of the valves AV-1, 2, 3, 4, 5 and 6 are closed (refer to section herein titled "Diffused Air Controller Eqnipment" in the chapter headed "Diffused Air Reactors" for more information on valves AV-1, 2, 3, 4, 5 and 6).

NOTE

If ARV-1 discharges, the operator should determine the cause of the discharge and correct the situation. Release of process air wastes electrical energy. The cause could be that too many blowers in service, too few valves AV-1 through 6 open, or insufficient counterweights installed in AV-1.

Discharge isolation valves are provided for BB-MCB-1, 2, 3 and 4. Each valve is a 24-inch manually operated butterfly valve designed to be in the fully open or fully closed position and is used to isolate the blower from the main air header. The discharge isolation valves are **never** used for throttling the blower output. Typically, valves BB-MCB-1 through 4 will be open. Check valves are provided to prevent the backflow of air through the unused blowers under normal circumstances.

Blower Control Panel MVMCC-80 is located in the Electrical Room of the Blower Building and consists of eight cubicals which contain the following:

- Cubicals 1, 2, 7 and 8 (for BB-MCB-1, 2, 3 and 4, respectively) each contain one microprocessor-based motor protection system, one motor differential relay, one elapsed time meter, four indicating lights, and three pushbuttons. Fault conditions are monitored by the microprocessor-based motor protection system, differential relaying system, and high pressure, vibration and differential pressure switches described under "Monitors and Alarms".
- Cubicals 3 and 6 each contain one microprocessor-based metering system. No control instrumentation is located on these cubicals
- Cubicals 4 and 5 contain a tie-breaker and associated busing. No control instrumentation is located on these cubicals

Control instrumentation on the BBCP includes four START and STOP pushbuttons for BB-MCB-1, 2, 3 and 4, one air header pressure indicator, designated PI-318, one total air flow indicator, designated FI-324, one total air flow totalizer, designated FQ-324, four ampere indicators, designated II-347, 348, 349 and 350, five horizontal bar graph position indicators, designated ZI-342, 343, 344, 345 and ZI-317, four ten-turn potentiometers, designated HC-342, 343, 344 and 345, four COMPUTER/MANUAL selector switches, designated NS-342, 343, 344 and 345, one OPEN and CLOSE pushbutton for ABV-1, and miscellaneous indicating lights.

(2) NORMAL OPERATION

Process air blowers BB-MCB-1, 2, 3 and 4 can be operated from the following locations:

- At the unit
- Blower Control Panel MVMCC-80
- Blower Building Control Panel (BBCP)

Each process air blower has START and STOP pushbuttons and an ON/OFF-LOCKOUT selector switch. Blower Control Panel MVMCC-80 is provided with START, STOP and LOR RESET pushbuttons. The BBCP is provided with START and STOP pushbuttons. Under normal operation, the process air blowers are controlled manually from the BBCP.

Blower inlet valves BIV-1, 2, 3 and 4 are provided with OPEN, CLOSE and STOP-LOCKOUT pushbuttons and a UNIT/OFF/BBCP selector switch at each unit. The BBCP is provided with a ten-turn potentiometer, horizontal bar graph position indicator and COMPUTER/MANUAL selector switch for each valve. Under normal operation, the blower inlet valves are controlled from the BBCP and the COMPUTER/MANUAL and UNIT/OFF/BBCP selector switches will be in the MANUAL and BBCP positions, respectively. The disc position of each valve will then be adjusted manually by the ten-turn potentiometer based on air flow, air header pressure, dissolved oxygen levels and alkalinity measurements in the Diffused Air Reactors.

NOTE

The COMPUTER/MANUAL selector switch is available to select between automatic control of the blowers through the computer SCADA system or manually through the panel-

mounted controls. At the start-up of the facilities, the COMPUTER control was not available. When available potentially sometime after start-up, the alkalinity monitoring system and the dissolved oxygen monitoring system will provide the input data for the computer control.

Under normal operation, the process air flow is selected to satisfy the oxygen demands in the Diffused Air Reactors. The blower output is adjusted to meet the total air demand of the system. The air is distributed to the reactors using control valves AV-1 through 6 (see the chapter headed "Diffused Air Reactors"). If, for instance, valves AV-1 through 6 are relatively wide open and the dissolved oxygen levels are generally below the target levels, the operator should increase blower output by opening the blower inlet valves. If the blower inlet valves are wide open, then another blower should be brought on line to meet the demand.

Each blower is identical. Generally, the output of each blower should be set relatively equal when more than one blower is in service to allow the most efficient operation.

CAUTION

The blowers have a lower capacity limit defined by the surge condition. Surges will occur if the inlet air valve for a particular blower is closed too much. The surge region is indicated on the ammeter/output indicator located on the BBCP and is generally at less than about half of the blower capacity. Operating in the surge region will cause excessive pulsations in the system to occur and should be avoided. If one blower is operating and it is desired to lower the process air flow below one half of a blower capacity two options are available: 1) Open relief valve ARV-1 or 2) Do not lower the process air flow and allow higher than target DO's in the reactors (in general, the most probable selection).

The output of the blowers and the horsepower drawn by the motors are based on a controllable factor, the position of the inlet valves, and several uncontrollable atmospheric factors, air temperature, air pressure, and relative humidity. The density of air decreases with an increase in temperature; therefore, in cool weather, when the air is heavier, the horsepower draw to provide sufficient air to the system will be greater. In warm weather, the output capacity of the blowers will be less.

Air blow-off valve ABV-1 is provided with OPEN, CLOSE and STOP-LOCKOUT pushbuttons and a UNIT/OFF/BBCP selector switch at the unit. The BBCP is provided with OPEN and CLOSE pushbuttons and horizontal bar graph position indicator. Under normal operation, the UNIT/OFF/BBCP selector switch is in the BBCP position and the air blow-off valve is controlled manually at the BBCP. The valve

disc position is adjusted using the OPEN and CLOSE pushbuttons to bleed-off any extra air not required by the process.

Under normal operation, the valve ARV-1 automatically protects the process air blowers from excessive discharge pressure by opening when the pressure in the air header is greater than the weighted piston assembly and closing when the pressure in the air header is less than the weighted piston assembly.

Under normal operation, the discharge isolation valves provided for BB-MCB-1, 2, 3 and 4 are manually adjusted to the fully open position each blower. The discharge isolation valves should be closed when a blower is taken out of service for maintenance.

(3) START-UP AND SHUTDOWN PROCEDURES

To start-up or shutdown the blower equipment, use the following procedure:

a. START-UP - MANUAL OPERATION (All process air blowers currently off)

- Start-up the Diffused Air Controller Equipment and Alkalinity Monitoring System
- Select the number of process air blowers required by the process
- Open the blower's associated discharge isolation butterfly valve by turning handwheel counterclockwise to open or clockwise to close valve
- Close the associated circuit breaker for the appropriate blower intake valve(s) and ABV-1 at MCC-82 in the Blower Building
- Place the UNIT/OFF/BBCP selector switch at the appropriate blower intake valve(s) in the BBCP position
- Place the COMPUTER/MANUAL selector switch at the BBCP for the appropriate blower intake valve(s) in the MANUAL position
- Close the circuit breaker at Blower Control Panel MVMCC-80 for the appropriate process air blower(s)
- Place the ON/OFF-LOCKOUT selector switch at the appropriate process air blower(s) in the ON position
- Depress the START pushbutton for the appropriate blower(s) at the BBCP
- Based on air flow, air header pressure, dissolved oxygen levels and alkalinity measurements, adjust the disc positions of the appropriate blower intake valve(s) and valves AV-1, 2, 3, 4, 5 and 6 using the ten-turn potentiometers located at the BBCP
- For the condition when only one blower is operating in the fully throttled down position and more air is being supplied than is required by the process, the additional air may be wasted from the system by adjusting the disc position of ABV-1 by depressing the OPEN and CLOSE pushbuttons at the BBCP. The disc position will continue to move until the appropriate pushbutton is released

b. START-UP - MANUAL OPERATION (One or more process air blowers currently operating)

The following procedure assumes the Diffused Air Controller Equipment and Alkalinity Monitoring System are currently operating and valve ARV-1 is properly adjusted:

- For the condition when valves AV-1, 2, 3, 4, 5 and 6 are in the fully throttled open position and not enough air is being supplied to the process, select the additional blower(s) required to meet air demand
- Open the additional discharge isolation butterfly valve(s) by turning handwheel counterclockwise to open or clockwise to close valve
- Close the associated circuit breaker for the additional blower intake valve(s) at MCC-82 in the Blower Building
- Place the UNIT/OFF/BBCP selector switch at the additional blower intake valve(s) in the BBCP position
- Place the COMPUTER/MANUAL selector switch at the BBCP for the additional blower intake valve(s) in the MANUAL position
- Close the circuit breaker at Blower Control Panel MVMCC-80 for the additional process air blower(s)
- Place the ON/OFF-LOCKOUT selector switch at the additional process air blower(s) in the ON position
- Throttle back the blower intake valves for those blowers currently operating by adjusting the associated ten-turn potentiometers on the BBCP
- Depress the START pushbutton at the BBCP for the additional blower to be brought on-line
- Open the blower intake valves to an equal position for each blower to the desired position based on air flow, air header pressure, dissolved oxygen levels and alkalinity measurements
- Adjust the disc positions of valves BIV-1, 2, 3 and 4 and valves AV-1, 2, 3, 4, 5 and 6 as required using the ten-turn potentiometers located at the BBCP

c. SHUTDOWN

To shutdown a process air blower and associated blower intake valve, use the following procedure:

- Throttle back the blower intake valves for those blowers currently operating by adjusting the associated ten-turn potentiometers on the BBCP
- Depress the STOP pushbutton on the BBCP for the associated blower to be shutdown
- Readjust the position of the blower intake valves for those blowers still operating to meet the required capacity by turning the associated ten-turn potentiometers on the BBCP
- Place the ON/OFF-LOCKOUT selector switch at the shutdown blower in the OFF position

NOTE

If maintenance is to be performed on a process air blower, depress the STOP pushbutton on the BBCP, place the ON/OFF-LOCKOUT selector switch in the OFF position, engage the locking device, open the associated circuit breaker on Blower Control Panel MVMCC-80 and close the associated manually operated discharge isolation butterfly valve. Follow approved **Lockout/Tagout** procedures (See Chapter VI, Safety).

- Depress the STOP-LOCKOUT pushbutton at the associated blower intake valve

- Place the UNIT/OFF/BBCP selector switch at the blower's associated blower intake valve in the OFF position

NOTE

If maintenance is to be performed on a blower intake valve, depress the STOP-LOCKOUT pushbutton at the unit, engage the locking device and open the associated circuit breaker on MCC-82. Follow approved **Lockout/Tagout** procedures (See Chapter VI, Safety).

To shutdown the air blow-off valve, use the following procedure:

- Depress the STOP-LOCKOUT pushbutton at the valve ABV-1
- Place the UNIT/OFF/BBCP selector switch at valve ABV-1 in the OFF position

NOTE

If maintenance is to be performed on the valve, depress the STOP-LOCKOUT pushbutton at the unit, engage the locking device and open the associated circuit breaker on MCC-82. Follow approved **Lockout/Tagout** procedures (See Chapter VI, Safety).

(4) ALTERNATE OPERATION

a. MANUAL OPERATION

Process air blowers BB-MCB-1, 2, 3 and 4 may be operated from Blower Control Panel MVMCC-80 as follows:

- Close the circuit breaker at Blower Control Panel MVMCC-80 for the associated process air blower
- Place the ON/OFF-LOCKOUT selector switch at the blower in the ON position
- Depress the START and STOP pushbuttons at Blower Control Panel MVMCC-80 for the associated blower

NOTE

Follow other procedures as noted above under NORMAL OPERATION

b. LOCAL OPERATION

Process air blowers BB-MCB-1, 2, 3 and 4 may be operated at the unit as follows:

- Close the circuit breaker at Blower Control Panel MVMCC-80 for the associated process air blower
- Place the ON/OFF-LOCKOUT selector switch at the blower in the ON position
- Depress the START and STOP pushbuttons at the unit for the associated blower

Motor operated butterfly valves BIV-1, 2, 3 and 4 and ABV-1 can be operated as follows:

- Close the associated circuit breaker for motor operated valves BIV-1, 2, 3 and 4 and ABV-1 on MCC-82 in the Blower Building
- Place the UNIT/OFF/BBCP selector switch at the valve in the UNIT position
- Depress the OPEN and CLOSE pushbuttons at the valve until the desired air flow is met

c. HANDWHEEL OPERATION

Motor operated butterfly valves BIV-1, 2, 3 and 4 and ABV-1 can be operated as follows:

- Place the UNIT/OFF/BBCP selector switch at the valve in the UNIT position
- Depress the motor operated declutching lever
- Turn handwheel counterclockwise to open or clockwise to close valve

NOTE

Energizing the motor operator automatically disengages the declutching lever and returns valve to motor operation.

(5) MONITORS AND ALARMS

The Blower Building Control Panel is provided with RUN and OFF indicating lights and current indicators for each blower. The electric current indicators are used in conjunction with the blower intake valves to modulate the air flow, since the current drawn by each blower is directly proportional to its capacity. Alarms will signal on the Annunciator Panel on the BBCP and the affected blower will shut down for the following fault conditions:

- Blower Failure (determined by microprocessor-based motor protection system)
- High Vibration (determined by vibration switch)
- High Discharge Pressure (determined by high pressure switch)

Alarms will signal on the Annunciator Panel on the BBCP and the affected blower will not shut down for the following fault condition:

- Intake Filter Dirty (determined by differential pressure switch)

NOTE

High inlet filter differential pressure is an indication of a dirty filter and is alarmed. Dirty filters will decrease blower performance and efficiency. When indicated, the air filter elements should be replaced.

Blower Control Panel MVMCC-80 consists of cubicals 1 - 8 and contain the following monitors:

- Cubicals 1, 2, 7 and 8 each contain one microprocessor-based motor protection system, one motor differential relay, one elapsed timer and RUNNING, OFF, LOR TRIPPED and SUCTION VALVE OPEN indicating lights. The motor protection system protects the process air blower from overload, phase failure/reversal, ground fault, underload (surge protection), jam (operating above normal range), and excessive temperature in the motor windings, motor bearings and blower

bearings. The motor differential relaying system monitors current imbalances in the blower motor. The elapsed timer indicates the total blower running time. The LOR TRIPPED indicating light indicates when a fault condition has occurred.

- Cubicals 3 and 6 each contain a microprocessor-based metering system for monitoring current imbalances in the transmission feeder lines to Blower Control Panel MVMCC-80

Refer to Division 5H4 Contractor's O&M Manual for manufacturer's literature that describes the operation of the microprocessor based motor protection system, the microprocessor based metering system and the motor differential relaying system.

Blower inlet valves BIV-1, 2, 3 and 4 have OPEN and CLOSE indicating lights at the unit, horizontal bar graph position indicators on the BBCP and SUCTION VALVE OPEN indicating lights on Blower Control Panel MVMCC-80.

Air blow-off valve ABV-1 has OPEN and CLOSE indicating lights at the unit and a horizontal bar graph position indicator and OPEN and CLOSE indicating lights on the BBCP.

Torque switches are provided for BIV-1, 2, 3 and 4 and ABV-1 to de-energize the motor operators if the valve movement becomes obstructed. Refer to Division 5H4 Contractor's O & M Manual for manufacturer's literature that describes the setting and operation of the torque switches.

The Remote Transmission Unit in the Control Room in the Blower Building continuously scans and transmits the condition of all status and alarm points to the SCADA system in the Process Control Room in the Main Pumping Station for the Blower equipment.

C. BLOWER BUILDING CONTROL PANEL

(1) DESCRIPTION (SEE FIGURE III-DA-BB-1)

The Blower Building Control Panel (BBCP), located in the Control Room in the Blower Building, is the main control module for the Diffused Air Biological System. The BBCP includes controls, monitors and alarms for various equipment at Junction Chamber No. 5, Nitrification Pumping Station, Diffused Air Reactors, Blower Building, Sludge Pumping Station Nos. 4 and 5 and the Sludge Treatment Building. The specific indication and control devices on the BBCP are described elsewhere for the specific equipment controlled through the BBCP.

D. ROLLING OVERHEAD DOOR: BB-OHD-1

(1) DESCRIPTION (SEE FIGURE III-DA-BB-1)

A rolling overhead door, designated BB-OHD-1, is provided in the Blower Building for access to the Process Air Blowers. BB-OHD-1 is about 17 feet wide by 14 feet high and equipped with a ½ hp motor.

(2) NORMAL OPERATION

The rolling overhead door is provided with a local control station containing an ON/OFF selector switch and OPEN, CLOSE and STOP-LOCKOUT pushbuttons. Limit switches are provided to stop and reverse

the door if an obstruction is encountered. A chain hoist operating device with a clutch and interlock is also provided to manually operate the door in the case of power failure. Limit switches are provided to de-energize the motor operator when the door position reaches the fully OPEN or fully CLOSED position.

(3) START-UP AND SHUTDOWN PROCEDURES

a. START-UP

- Close the associated circuit breaker at MCC-82
- Place the ON/OFF selector switch in the ON position
- Depress the OPEN, CLOSE and STOP pushbuttons as required

b. SHUTDOWN

- Place the ON/OFF selector switch in the OFF position

(4) ALTERNATE OPERATION

The door can be alternately operated as follows:

- Place the ON/OFF selector switch in the OFF position
- Depress the motor operator declutching lever
- Pull chain hoist to OPEN or CLOSE the door as required

E. HOISTING EQUIPMENT: BB-BC-1

(1) DESCRIPTION (See Figure III-DA-BB-1)

Hoisting Equipment is provided in the Blower Building to aid removal and installation of blower equipment located in the Blower Room. The Hoisting Equipment consists of a pendant controlled overhead traveling bridge crane system, designated BB-BC-1, and includes one motor operated, under running, single girder bridge, one motor operated, under running trolley and one motor operated, wire rope hoist with ten-ton lifting capacity. The overhead crane system has 11 feet 0-1/2 inches available lift, a 10 hp and 1800 rpm hoist, 0.75 hp and 1800 rpm trolley and 0.5 hp and 1800 rpm bridge.

(2) NORMAL OPERATION

The overhead crane system is provided a pendant pushbutton station for control of the hoist, trolley and bridge. The pendant control station consists of ON and OFF pushbuttons, UP and DOWN pushbuttons for control of the hoist, RIGHT and LEFT pushbuttons for control of the trolley and FORWARD and REVERSE pushbuttons for control of the bridge. An adjustable limit switch is provided along with a factory set fixed limit switch to limit the normal up and down travel of the hook. Limit switches are designed to de-energize the motor operator and to apply the brake, but not to prevent lowering by operation of the appropriate pushbutton. Refer to Division 5H4 Contractor's O&M Manual for procedures for adjusting the limit switch.

NOTE

An overload cutoff device is provided to prevent application of forces greater than the capacity of the hoist. A mechanical brake is provided to automatically hold the load indefinitely in any

position and to provide controlled lowering speed in the event of simultaneous motor brake and power supply failure.

(3) START-UP AND SHUTDOWN PROCEDURES

a. START-UP

- Close the associated circuit breaker at MCC-82
- Depress the ON pushbutton
- Depress the UP, DOWN, RIGHT, LEFT, FORWARD and REVERSE pushbuttons as required

b. SHUTDOWN

- Depress the OFF pushbutton

NOTE

If maintenance is to be performed on the unit, open the circuit breaker on Motor Control Center MCC-82 and place the ON-OFF switch at the unit in the OFF position and engage the locking device. Follow approved **Lockout/Tagout** procedures (See Chapter VI, Safety).

(4) MONITORS AND ALARMS

The ON pushbutton located at the pendant control station is provided with a power on indicator light.

F. EFFLUENT WATER (SEE FIGURE III-SU-UPS-5 THROUGH 9)

The effluent water equipment at the Blower Building consists of piping, fittings, and a gate valve. Effluent water is supplied to the Blower Building by the general purpose effluent water pumps as described in the section headed "Filter Building and Nitrified Effluent Conduit". The effluent water equipment supplies effluent water to the air conditioning equipment and the methanol feed system located in the Blower Building.

G. PLANT WATER (SEE FIGURE III-SU-UPS-4)

The plant water equipment at the Blower Building consists of piping, fittings, hose hydrants, a pressure gauge and a gate valve. Plant water is supplied to the Blower Building by the hydro-pneumatic supply system located in the Main Pumping Station. The plant water equipment supplies plant water to the air conditioning equipment and hose hydrants located in the Blower Building.

H. CITY WATER (SEE FIGURE III-SU-UPS-4)

The city water equipment at the Blower Building consists of piping, fittings, and a gate valve. The city water equipment supplies city water to the lavatory and water closet in the Toilet Room and to the sink and water heater in the Control Room of the Blower Building.

I. WATER HEATER

A water heater is provided in the Control Room of the Blower Building to produce hot water for the sink in the Control Room and for the lavatory in the Toilet Room. The water heater is 2 kw with a 6 gallon capacity and 150 psi working pressure and is provided with a drain, drip pan, gate valves, vacuum breaker, check valve, and pressure relief valve.

J. GRINDER PUMP STATION

(1) DESCRIPTION

A grinder pump station is provided in the Blower Room of the Blower Building to pump sanitary waste from the Toilet Room and Control Room to the effluent channel of the Nitrification Pumping Station. The grinder pump station consists of a basin, basin cover, grinder pump, quick disconnect guide rail system, check valve, shutoff valve, junction box, piping, fittings and control instrumentation.

The grinder pump is a single stage, vertical, centrifugal, submersible pump rated for 25 gpm at a head of 28 feet and driven by a constant speed 2 hp electric motor. The pump is provided with liquid level float controls (to automatically start and stop the pump) and a control panel. The control panel is provided with one selector switch and miscellaneous indicating and alarm lights.

(2) NORMAL OPERATION

The control panel for the grinder pump is provided with HAND/OFF/AUTO selector switch. Under normal operation, the HAND/OFF/AUTO selector switch will be in the AUTO position and the grinder pump will operate based on the position of the liquid level float controls located in the basin.

(3) START-UP AND SHUTDOWN PROCEDURES

To start-up the grinder pump, use the following procedure:

- Close the associated circuit breaker for the Blower Building Lighting Panel at MCC-82
- Close the associated circuit breaker at the Blower Building Lighting Panel
- Place the HAND/OFF/AUTO selector switch in the AUTO position

(4) ALTERNATE OPERATION

The grinder pump may be operated alternately as follows:

- Place the HAND/OFF/AUTO selector switch in the HAND position. The pump will run continuously until the selector switch is released back to the OFF position

(5) MONITORS AND ALARMS

The grinder pump motor is provided with a heat sensor that automatically protects the motor from burnout due to excessive heat from any overload condition. The heat sensor automatically resets once the motor has cooled. The pump is also provided with a seal leak probe that detects water in the seal housing and activates an indicating light at the control panel. A float control is provided for a high level condition in the basin and activates an alarm light at the control panel The control panel is provided with PUMP RUN and SEAL LEAK indicating lights and a flashing alarm light located on top of the control panel.

K. PLANT AIR (SEE FIGURE III-SU-UPS-1 THROUGH 3)

The plant air equipment at the Blower Building consists of piping, fittings, hose valves, a ball valve and a moisture trap. Compressed air is supplied to the Blower Building by the plant air system which is fed by air compressors located in the Main Pumping Station and Filter Building No. 2. The plant air equipment supplies air to hose valves located at the Blower Building and is used for general maintenance.

L. VENTILATION AND AIR CONDITIONING EQUIPMENT

(1) DESCRIPTION (SEE FIGURE III-DA-BB-1)

A ventilation and air conditioning system is provided at the Blower Building. The ventilation system in the Blower Room, Toilet Room and Stairway provides 100 percent outside air to these areas. The ventilation and air conditioning system provides automatic control of the temperature in the Electrical Room and Control Room.

The Ventilation and Air Conditioning Equipment in the Blower Building consists of seven roof exhaust fans, designated BB-REF-1, 2, 3, 4, 5, 6 and 7; one air conditioning unit, designated BB-AC-1; one activated carbon filtration system with integral supply blower, designated BB-S-1; one fan powered air terminal, designated BB-FP-1; one temperature control panel, designated BB-TCP-1; eight thermostats; intake louvers with manually operated dampers; ductwork and accessories.

Roof exhaust fans BB-REF-1, 2, 3, 4 and 5 are centrifugal type fans and serve the Blower Room in the Blower Building. Each fan is 66 inches in diameter with a 2 hp, belt driven, two speed, two winding motor. The exhaust fans draw air into the Blower Room through intake louvers and manually operated dampers located on the north side of the building at floor elevation 11.17 feet. Each fan may be operated automatically through wall-mounted thermostats or manually at the temperature control panel BB-TCP-1.

Roof exhaust fan BB-REF-6 is a centrifugal type fan and serves the Toilet Room in the Blower Building. This fan is 18-1/4 inches in diameter with a 0.04 hp, direct driven, single speed motor. BB-REF-6 is operated by the wall light switch located in the Toilet Room.

Roof exhaust fan BB-REF-7 is a centrifugal type fan and serves the Stairway in the Blower Building. This fan is 18-1/4 inches in diameter with a 0.16 hp, direct driven, single speed motor. The fan draws air into the Stairway through intake louvers and a manually operated damper located on the north side of the building at floor elevation 11.17 feet. BB-REF-7 may be operated automatically through a wall-mounted thermostat located in the Stairway or manually at the temperature control panel BB-TCP-1.

Air conditioner BB-AC-1 is a one-piece, self-contained, water cooled, floor mounted upflow, electric packaged cooling unit and serves the Electrical Room and Control Room in the Blower Building. The air conditioner is provided with a 10 hp blower and has a capacity of 11,875 cfm at 1725 rpm. BB-AC-1 may be operated automatically by a thermostat located in the Electrical Room or manually at the temperature control panel BB-TCP-1.

The activated carbon filtration system is an air purification system used in conjunction with BB-AC-1 and provides filtered outside air for the Electrical Room and Control Room in the Blower Building. The filtration system consists of a skid mounted canister assembly with lid and drain nozzle for housing the activated carbon, inlet and outlet nozzles, ductwork, one flow control valve and one supply blower, designated BB-S-1. Blower BB-S-1 provides outside air to the return side of air conditioner BB-AC-1 and is driven by a 7.5 hp, belt driven, single speed motor and has a capacity of 1100 cfm at 2897 rpm. The blower draws air into the Blower Room and the filtration system through intake louvers and manually operated dampers located at on the east side of the building at floor elevation 11.17 feet. BB-S-1 is operated automatically in conjunction with BB-AC-1 or manually.

Fan powered air terminal BB-FP-1 is a variable air volume unit that maintains a constant temperature in the Control Room in the Blower Building. The fan powered air terminal consists of a lined plenum with an air inlet collar, fan, volume damper, electronic damper operator, high and low flow control limits and a two stage electric heating coil. The fan of BB-FP-1 is driven by a ½ hp motor and has a capacity of 2000 cfm (heated discharge). BB-FP-1 is designed to operate automatically by a thermostat located in the Control Room or manually.

The Ventilation and Air Conditioning Equipment is controlled from temperature control panel BB-TCP-1 located in the Blower Room and by thermostats located throughout the Blower Building. BB-TCP-1 consists of seven selector switches, miscellaneous indicating lights and a disconnect switch.

(2) NORMAL OPERATION

Exhaust fans BB-REF-1, 2, 3, 4 and 5 are each provided with an AUTO/OFF/HI/LO selector switch at BB-TCP-1, an ON/OFF-LOCKOUT selector switch and TEST-HIGH and TEST-LOW pushbuttons near each unit in the Blower Room, and an elapsed time meter at Motor Control Center MCC-82. Under normal operation, the ON/OFF selector switch will be in the ON position and the AUTO/OFF/HI/LO selector switch will be in the AUTO position. The exhaust fans will then ventilate the Blower Room at a rate determined by the two-stage thermostat located near each unit. The fan will operate at low speed whenever the temperature is between 90 and 100 degrees F and at high speed whenever the temperature is above 100 degrees F as sensed by its respective wall-mounted thermostat.

Exhaust fan BB-REF-6 is operated by the wall light switch located in the Toilet Room. The fan will operate when the light switch is in the ON position and will shutdown when the light switch is in the OFF position.

Exhaust fan BB-REF-7 is provided with an AUTO/OFF/HAND selector switch at BB-TCP-1 and an ON/OFF-LOCKOUT selector switch near the unit in the Stairway. Under normal operation, the ON/OFF-LOCKOUT selector switch will be in the ON position and the AUTO/OFF/HAND selector switch will be in the AUTO position. The exhaust fan will then ventilate the Stairway whenever the temperature is above 95 degrees F as sensed by its respective wall mounted thermostat.

Air conditioner BB-AC-1 is provided with a HAND/OFF/AUTO selector switch at BB-TCP-1 and an ON/OFF-LOCKOUT selector switch near the unit in the Blower Room. Under normal operation, the ON/OFF-LOCKOUT selector switch will be in the ON position and the HAND/OFF/AUTO selector switch will be in the AUTO position. The air conditioner will then provide cooling to the Electrical and Control Rooms whenever the temperature is above 83 degrees F as sensed by the wall mounted thermostat located in the Electrical Room. The cooling cycle will stop when the space temperature in the Electrical Room reaches 76 degrees F.

Supply blower BB-S-1 for the activated carbon filtration system is interlocked and operated in conjunction with BB-AC-1. BB-S-1 is provided with an ON/OFF-LOCKOUT selector switch and a TEST pushbutton at the unit and an elapsed time meter at MCC-82. Under normal operation, the ON/OFF-LOCKOUT selector switch will be in the ON position and the supply blower will operate whenever BB-AC-1 is in operation.

Fan powered air terminal BB-FP-1 is provided with an ON/OFF-LOCKOUT selector switch near the unit in the Control Room. Under normal conditions, the ON/OFF-LOCKOUT selector switch will be in the ON position. The volume damper will modulate open whenever the wall mounted thermostat calls for cooling to maintain a 78-degree F set point. Upon a fall in space temperature, the volume damper will first modulate closed to a minimum primary airflow position. Upon a further fall in space temperature, the fan and electric heating coil of BB-FP-1 will be energized and will circulate warm plenum air into the Control Room. The electric heating coil will be energized in stages to maintain 70 degrees F set point.

(3) START-UP AND SHUTDOWN PROCEDURES

To start-up and shutdown the Ventilation and Air Conditioning Equipment, use the following procedures:

a. START-UP

Roof Exhaust Fans: BB-REF-1, 2, 3, 4 and 5 start as follows:

- Close the associated circuit breakers on MCC-82 in the Electrical Room in the Blower Building
- Place the ON/OFF-LOCKOUT selector switch near the unit in the ON position
- Place the AUTO/OFF/HI/LO selector switch at BB-TCP-1 in the AUTO position

Roof Exhaust Fan: BB-REF-7 starts as follows:

- Close the associated circuit breaker on MCC-82
- Place the ON/OFF-LOCKOUT selector switch at the unit in the ON position
- Place the HAND/OFF/AUTO selector switch at BB-TCP-1 in the AUTO position. The initial suggested set point for the wall mounted thermostat is 95 degrees F.

Air Conditioner and Filtration System Supply Blower: BB-AC-1 and BB-S-1 start as follows:

- Close the associated circuit breakers on MCC-82
- Place the ON/OFF-LOCKOUT selector switch at each unit in the ON position
- Place the HAND/OFF/AUTO selector switch for BB-AC-1 at BB-TCP-1 in the AUTO position

Fan Powered Air Terminal: BB-FP-1

- Close the circuit breaker at the unit
- Place the ON/OFF-LOCKOUT selector switch at the unit in the ON position. The initial suggested low and high set points for the wall mounted thermostat are 70 and 78 degrees F, respectively.

b. SHUTDOWN

Roof Exhaust Fans: BB-REF-1, 2, 3, 4 and 5 are shutdown as follows:

- Place the AUTO/OFF/HI/LO selector switch at BB-TCP-1 in the OFF position

Roof Exhaust Fan: BB-REF-7 is shutdown as follows:

- Place the HAND/OFF/AUTO selector switch at BB-TCP-1 in the OFF position

Air Conditioner and Filtration System Supply Blower: BB-AC-1 and BB-S-1

- Place the HAND/OFF/AUTO selector switch for BB-AC-1 at BB-TCP-1 in the OFF position

Fan Powered Air Terminal: BB-FP-1

- Place the ON/OFF-LOCKOUT selector switch at the unit in the OFF position

(4) ALTERNATE OPERATION

The Ventilation and Air Conditioning Equipment may be operated alternately as follows:

a. Roof Exhaust Fans: BB-REF-1, 2, 3, 4 and 5

MANUAL OPERATION

- Place the AUTO/OFF/HI/LO selector switch at BB-TCP-1 in the HI or LO position. The fan will run continuously until the setting is changed

LOCAL OPERATION

- Place the AUTO/OFF/HI/LO selector switch at BB-TCP-1 in the OFF position
- Depress the TEST-HIGH or TEST-LOW pushbutton near each unit. The fan will run until the pushbutton is released

b. Roof Exhaust Fan: BB-REF-7

- Place the HAND/OFF/AUTO selector switch at BB-TCP-1 in the HAND position. The fan will run continuously until the setting is changed

c. Air Couditioner and Filtration System Supply Blower: BB-AC-1 and BB-S-1

MANUAL OPERATION

- Place the HAND/OFF/AUTO selector switch for BB-AC-1 at BB-TCP-1 in the HAND position. The air conditioner and blower will run continuously until the setting is changed

LOCAL OPERATION

- Place the HAND/OFF/AUTO selector switch for BB-AC-1 at BB-TCP-1 in the OFF position
- Depress the TEST pushbutton near BB-S-1. The blower will run until the pushbutton is released

(5) MONITORS AND ALARMS

Exhaust fans BB-REF-1, 2, 3, 4 and 5 are each provided with HIGH SPEED and LOW SPEED indicating lights and an elapsed time meter at MCC-82. RUN and ALARM indicating lights are also provided at BB-TCP-1 for each fan. Each fan is provided with a differential pressure switch which will energize its respective ALARM indicating light on BB-TCP-1 and will de-energize its respective fan starter when a "no flow" status is sensed.

Exhaust fan BB-REF-7 is provided with RUN and ALARM indicating lights on BB-TCP-1. BB-REF-7 is provided with a differential pressure switch which will energize its ALARM indicating light on BB-TCP-1 and will de-energize its fan starter when a "no flow" status is sensed.

Air conditioner BB-AC-1 is provided with RUN and ALARM indicating lights on BB-TCP-1. Supply blower BB-S-1 is provided with RUN and ALARM indicating lights on BB-TCP-1 and a RUNNING light on MCC-82. BB-AC-1 and BB-S-1 are each provided with a differential pressure switch which will energize its respective ALARM indicating light on BB-TCP-1 and will de-energize its respective starter when a "no flow" status is sensed. BB-S-1 will be automatically shutdown whenever BB-AC-1 goes into an alarm condition. Smoke detectors are provided in the supply and return ductwork to and from BB-AC-1. The smoke detectors will shutdown the blowers of BB-AC-1 and BB-S-1 upon activation.

The Remote Transmission Unit in the Control Room in the Blower Building continuously scans and transmits the condition of all status and alarm points to the computer logger in the Process Control Room in the Main Pumping Station for the Ventilation and Air Conditioning Equipment. Status and alarm points are received and displayed by the computer logger.

The Remote Transmission Unit in the Control Room in the Blower Building continuously scans and transmits the condition of all status and alarm points to the computer logger in the Process Control Room in the Main Pumping Station for the Ventilation and Air Conditioning Equipment. Status and alarm points are received and displayed by the computer logger.

M. POWER DISTRIBUTION

The power distribution system is shown in detail on the contract plans and various shop drawings. Refer to Table III-DA-BB-1, Blower Building - Facility Equipment Summary for contract plan and shop drawing numbers which pertain to the power distribution system.

OPERATION AND CONTROL
III-DA-56

III-DA-NPS NITRIFICATION PUMPING STATION (057) AND JUNCTION CHAMBER NO. 5 (050)

A. GENERAL

(1) JUNCTION CHAMBER NO. 5

Junction Chamber No. 5 is located at the south side of Final Sedimentation Tanks No. 2 and 3 and contains the following equipment and systems (See Figure III-DA-NPS-1):

- Flow Metering Equipment
- Sluice Gates
- Spike Line
- Sump Pumping Equipment
- Exhaust Fan
- Plant Water
- Effluent Water
- Plant Air
- Power Distribution System

Junction Chamber No. 5 controls the flow to the Diffused Air Biological System during the series and parallel modes of operation. During the parallel mode of operation, Junction Chamber No. 5 accepts flow from the Main Pumping Station Discharge Channel through a 66-inch secondary treatment conduit. During the series mode of operation, Junction Chamber No. 5 accepts carbonaceous effluent flow from Final Sedimentation Tanks Nos. 1-12. Discharge from Junction Chamber No. 5 flows by gravity through two parallel 7'-6" x 7'-6" conduits to the Nitrification Pumping Station. During excess flow and emergency situations, Junction Chamber No. 5 can used to send flow directly to the Post Aeration Chlorination Tanks through a 66-inch conduit, bypassing secondary treatment.

Refer to Table III-DA-NPS-1, Nitrification Pumping Station and Junction Chamber No. 5 - Facility Equipment Summary, for manufacturers, operation, maintenance, contract plan and shop drawing references. Refer to 5H4 Contractor's O&M Manual for Manufacturer's Service Manual's pertaining to the equipment included in Junction Chamber No. 5.

(2) NITRIFICATION PUMPING STATION

The Nitrification Pumping Station is located at the northeast corner of the Diffused Air Reactors and contains the following equipment and systems (III-DA-NPS-2):

- Nitrification Pumping Station Wet Well
- Nitrification Pumping Equipment
- Sluice Gates
- Bubbler System
- Sanitary Waste Line
- Spent Cooling Water Return
- Reactor Effluent Recycle
- Effluent Water
- Plant Air
- Power Distribution System

The Nitrification Pumping Station controls flow into the Diffused Air Reactors. Flow to the Nitrification Pumping Station comes from Junction Chamber No. 5 through two parallel 7'-6" x 7'-6" conduits and is either carbonaceous effluent from Final Sedimentation Tanks Nos. 1-12 when operating in the series mode or primary effluent from the Main Pumping Station when operating in the parallel mode. The Nitrification Pumping Station also accepts mixed liquor flow from the Diffused Air Reactors Effluent Channel to be used for recycle purposes during the parallel mode of operation. Flow is discharged from the Nitrification Pumping Station axial flow pump tubes into the channel system which feeds the Diffused Air Reactors (see Figures II-2A and II-2B, Plant Flow Diagram).

Refer to Table III-DA-NPS-1, Nitrification Pumping Station and Junction Chamber No. 5 - Facility Equipment Summary for control numbers, manufacturers, equipment capacities and operation, maintenance, contract plan and shop drawing references. Refer to Division 5H4 Contractor's O&M Manual for Manufacturer's Service Manuals pertaining to the nitrification pumping equipment.

B. JUNCTION CHAMBER NO. 5

(1) FLOW METERING EQUIPMENT: FE-300 AND FE-301

a. DESCRIPTION

Flow metering equipment is provided to measure primary effluent flow and supplemental nitrification stage influent flow (the spike flow) through Junction Chamber No. 5. The flow metering equipment consists of two magnetic flow meters, designated FE-300 and FE-301 and associated local flow transmitters, one motor operated throttling butterfly valve, designated FCV-1, one motor operated isolation plug valve, designated IV-1, associated controller equipment on the Blower Building Control Panel (BBCP) and piping and fittings.

Instrumentation on the BBCP includes one parallel mode flow indicating controller, designated FFIC-300; one supplemental nitrification stage influent flow (spike flow) indicating controller, designated FIC-301; one primary effluent flow totalizer, designated FQ-300; one spike flow totalizer, designated FQ-301; one primary effluent flow indicator, designated FI-300; one horizontal bar graph position indicator, designated ZI-301; and a pushbutton station for control of isolation valve IV-1.

NOTE

Additional instrumentation located on the BBCP and used in conjunction with the instrumentation listed above includes one anoxic recycle flow indicator, designated FI-321, and one nitrification effluent flow indicator, designated FI-354. Flow indicator FI-321 is the sum of signals from flow elements FE-302, 303, 304 and 305 minus the signal from FE-300. Flow indicator FI-354 is the sum of signals from MS-4, FE-48 and FE-49. These flow indicators allow the operator to monitor the balance of flow throughout the Diffused Air Biological System.

b. SERIES MODE

The flow metering equipment works as follows during the series mode of operation: supplemental nitrification stage influent flows by gravity from the Main Pumping Station to Junction Chamber No. 5 at a rate selected at flow indicating controller FIC-301; magnetic flow meter FE-301 measures the spike line flow; flow indicating controller FIC-301 automatically adjusts the disc position of modulating valve FCV-1 as required to meet the selected flow. Magnetic flow meter FE-300 is not utilized while operating in the series mode.

Flow meter FE-301 is an 18-inch, in-line, magnetic type flow meter with an operating range of 1.5 to 30.0 mgd and measures the supplemental nitrification stage influent flow through the 20-inch conduit from the Main Pumping Station during series mode of operation. Flow meter FE-301 has a local flow transmitter, designated FIT-301.

Throttling valve FCV-1 is an 18-inch motor operated butterfly valve designed to modulate supplemental nitrification stage influent flow to the Diffused Air Biological System during series mode of operation.

Isolation valve IV-1 is a 20-inch motor operated plug valve designed to be in the fully open or fully closed position and is used to isolate the 20-inch supplemental nitrification stage influent line during parallel mode of operation.

1. Normal Operation

Motor operated butterfly valve FCV-1 has a UNIT/OFF/BBCP and an ON/OFF selector switch and OPEN, CLOSE and STOP pushbuttons located at the valve. Under normal series operation, the UNIT/BBCP selector switch will be in the BBCP position.

NOTE

Limit switches are provided to de-energize the motor operator for the spike flow control valve when the valve position arrives at the completely OPEN or CLOSED position.

Motor operated plug valve IV-1 has OPEN and CLOSE pushbuttons and an ON/OFF selector switch at the unit and OPEN and CLOSE pushbuttons on the BBCP. Under the series mode of operation, the valve will be in the OPEN position. Under the parallel mode of operation, the valve will be in the CLOSE position.

2. Start-up and Shutdown Procedures

To start-up or shutdown the Flow Metering Equipment for the series mode, use the following procedures:

(a) Start-up (Series Mode)

- Close the associated circuit breaker for the valves FCV-1 and IV-1 on Distribution Panel DP-82
- Place the UNIT/BBCP selector switch at valve FCV-1 in the BBCP position
- Select the desired flow rate on flow indicating controller FIC-301
- Press the OPEN pushbutton on the Blower Building Control Panel for valve IV-1
- Open the manually controlled 20-inch gate valve on the spike line outside of the the south end of the Main Pumping Station Discharge Channel (This valve may be left normally open)

NOTE

Limit switches are provided to de-energize the motor operatored valves when the valve arrives at the completely OPEN or CLOSED position.

(b) Shutdown (Series Mode)

- Close the manually controlled 20-inch globe valve on the supplemental nitrification influent flow line adjacent to the south end of the Main Pumping Station (Close this valve only when no spike flow will be used for long periods of time.)
- Press the CLOSE pushbutton on the Blower Building Control Panel for valve operation.

c. PARALLEL MODE

1. Normal Operation

The flow metering equipment works as follows during the parallel mode of operation: primary effluent flows by gravity from the Main Pumping Station to Junction Chamber No. 5; the primary effluent flow rate is selected at the flow indicating controller FFIC-300 and may be a constant rate of flow or a percent of the total plant flow; magnetic flow meter FE-300 measures the primary effluent flow rate. Magnetic flow meter FE-301 is not utilized while operating in the parallel mode.

NOTE

During parallel mode of operation, flow indicating controller FFIC-300 can be operated as a constant setpoint controller or as a ratio controller. The controller configuration determines how the Nitrification Pumping Equipment will be operated at the Nitrification Pumping Station. Refer to subsection herein titled "Nitrification Pumping Equipment: NPS-NP-1, 2, 3, 4, 5, 6 and 7" for a discussion on the configuration of flow indicating

controller FFIC-300 and Nitrification Pumping Equipment operation.

Flow meter FE-300 is a 48-inch, in-line, magnetic type flow meter with an operating range of 10 to 60 mgd and measures the primary effluent flow through the 66-inch conduit from the Main Pumping Station during parallel mode of operation. Flow meter FE-300 has a local flow transmitter, designated FIT-300.

2. Start-up (Parallel Mode)
   - Select configuration for FFIC-300 as a constant setpoint controller or ratio controller (see subsection titled "Nitrification Pumping Equipment")
   - Open Sluice Gate MPS-SG-10 at the south end of the Main Pumping Station Discharge Channel
   - Open other sluice gates as described under the subsection headed "Sluice Gates"
   - Select the desired flow rate on flow indicating controller FFIC-300

3. Shut-down (Parallel Mode)
   - Close Sluice Gate MPS-SG-10 at the south end of the Main Pumping Station Discharge Channel
   - Close other sluice gates as described under the subsection headed "Sluice Gates"

(2) DEWATERING EQUIPMENT

a. DESCRIPTION

Dewatering equipment is provided to dewater the 66-inch primary effluent conduit from the Main Pumping Station, the 16-inch dewatering line from the Dewatering Pumping Station at Sludge Pumping Station No. 5 and the dewatering pumping Station at the Post-Aeration/Chlorination Tanks, and the 20-inch spike line from the Main Pumping Station.

b. NORMAL OPERATION

Under normal operation, all manually operated dewatering and air release valves are in the fully closed position and the blind flanges are installed on the dewatering line connections.

c. DEWATERING

1. Dewatering the 66-inch Primary Effluent Conduit

To dewater the 66-inch primary effluent conduit, use the following procedure:

- Close Sluice Gate MPS-SG-10 at the south end of the Main Pumping Station Discharge Channel and the sluice gates downstream at Junction Chamber No. 5
- Remove the blind flanges from the 8-inch suction and 8-inch discharge dewatering line connections located adjacent to the effluent channel of Final Sedimentation Tank Nos. 1 - 12
- Connect a portable pump to the dewatering line connections

- Open the manually operated plug valves on the discharge and suction dewatering line connections
- Open the manually operated dewatering plug valve and the manually operated air release plug valve
- Start the portable pump (the 66-inch primary effluent conduit contents will be discharged into the effluent channel of Final Sedimentation Tanks Nos. 1 - 12)
- Once the 66-inch primary effluent conduit has been completely dewatered, stop the pump and close the manually operated plug valves on the discharge and suction dewatering line connections
- Disconnect the pump and reinstall blind flanges
- Close the manually operated dewatering plug valve and manually operated air release valve

2. Dewatering the 20-inch Spike Line

To dewater the 20-inch supplemental nitrification stage influent line, use the following procedure:

- Close the 20-inch valve outside of the south end of the Main Pumping Station Discharge Channel
- Close the manually operated 20-inch plug valve at Junction Chamber No. 5
- Open the manually operated 2-inch dewatering plug valve to the sump pit
- Start the sump pumping equipment at Junction Chamber No. 5 (refer to section titled "Sump Pumping Equipment"

3. Directing the Dewatering Flow from Dewatering Pumping Stations

The 16-inch dewatering line passing through Junction Chamber No. 5 can be used to select whether the dewatering flow will be sent to the Primary Tanks No. 5-8 Effluent Channel or to the process flow passing through Junction Chamber No. 5. To direct the discharge from the Dewatering Pumping Stations at Sludge Pumping Station No. 5 and at the Post-Aeration/Chlorination Tanks, use the following procedure:

- Close the manually operated air release valve on the 16-inch dewatering line
- Open the appropriate valves at Sludge Pumping Station No. 5 or at the Post-Aeration Chlorination Tanks (refer to sections titled "Sludge Pumping Station Nos. 1, 2, 3, 4 and 5" and "Post-Aeration/Chlorination Tanks")
- Open the appropriate valves to direct the flow to the Junction Chamber No. 5 process flow or to the Primary Sedimentation Tanks No. 5-8 Effluent Channel
- Once the Dewatering Sump has been completely drained at Sludge Pumping Station No. 5, the Dewatering Pumping Equipment will stop

(3) <u>SLUICE GATES: JC5-SG-1, 2, 3 AND 4</u>

a. DESCRIPTION (SEE FIGURE III-DA-NPS-1)

Junction Chamber No. 5 is provided with four sluice gates, designated JC5-SG-1, 2, 3 and 4. Sluice Gates JC5-SG-1 and 2 are 66x66 inches in size and Sluice Gates JC5-SG-3 and 4 are 84x96 inches

in size. All of the sluice gates provided in Junction Chamber No. 5 are flush bottom and electric motor operated. Table III-DA-NPS-2 indicates shows key information for each sluice gate.

TABLE III-DA-NPS-2 - FUNCTION OF SLUICE GATES

CONTRACT PLAN DESIGNATION	SIZE (INCHES)	OPERATOR TYPE	FUNCTION
JC5-SG-1	66 x 66	Electric Motor	Permits flow from the Main Pumping Station Discharge Channel, through Flow Meter FE-300, to the Post Aeration/ Chlorination Tanks (Used only to bypass secondary treatment).
JC5-SG-2	66 x 66	Electric Motor	Permits flow from the Main Pumping Station Discharge Channel, through Flow Meter FE-300, to the Diffused Air Reactors (Parallel Mode only).
JC5-SG-3	84 x 96	Electric Motor	Permits flow from Final Sedimentation Tanks Nos. 1-12 to the Diffused Air Reactors (Series Mode).
JC5-SG-4	84 x 96	Electric Motor	Permits flow from Final Sedimentation Tanks Nos. 1-12 to the Diffused Air Reactors (Series Mode).

Stop log grooves are provided at each gate to allow isolation of the gate for maintenance purposes without having to discontinue operation.

b. NORMAL OPERATION

During the series mode of operation, Sluice Gate JC5-SG-3 and JC5-SG-4 are open, and JC5-SG-1 and 2 are closed. During the parallel mode of operation, JC5-SG-2 is open while JC5-SG-3 and 4 are closed. JC5-SG-1 can be opened to allow excess flow directly into the Post Aeration/Chlorination Tanks.

CAUTION

Sluice gate JC5-SG-1 is used only to bypass flow around all biological treatment or just around nitrification at the Diffused Air Reactors. JC5-SG-1 should only be opened in extreme emergency situations.

NOTE

When operating in the parallel mode sluice gate JC5-SG-2 must be open but a stog plate or stop logs must be placed in the stop log groove which prevents flow from entering the western most conduit going to the Nitrification Pumping Station.

Each sluice gate is provided with a LOCAL/OFF/REMOTE selector switch and OPEN, CLOSE and STOP pushbuttons located at the unit and OPEN and CLOSE pushbuttons located on the Blower Building Control Panel (BBCP). Upon pressing the OPEN or CLOSE pushbutton, the electric motor will operate to move the sluice gate to the desired location until the appropriate limit switch is tripped. At this point, the electric motor will de-energize and the appropriate indicating light will be illuminated.

Under normal operation, the LOCAL/OFF/REMOTE selector switch will be in the REMOTE position and the gates will be controlled by the OPEN and CLOSE pushbuttons on the BBCP.

c. START-UP AND SHUTDOWN PROCEDURES

To start-up and shutdown the sluice gates, use the following procedures:

1. Start-Up
   - Close the circuit breaker for each sluice gate on Distribution Panel DP-82
   - Place the LOCAL/REMOTE selector switch at the unit in the REMOTE position
   - Press the OPEN or CLOSE pushbutton on the Blower Building Control Panel

2. Shutdown
   - Press the STOP pushbutton located at each unit

NOTE

If maintenance is to be performed on the sluice gates, press the STOP pushbutton at the unit, open the circuit breaker on Distribution Panel DP-82 and set the locking device on the STOP pushhutton. Follow approved **Lockout/Tagout** procedures (See Chapter VI, Safety).

d. ALTERNATE OPERATION

The sluice gates can be controlled at the unit by placing the LOCAL/REMOTE selector switch in the LOCAL position and pressing the OPEN or CLOSE pushbuttons or using the handwheel.

e. MONITORS AND ALARMS

Each sluice gate is provided with OPEN and CLOSE indicating lights at the unit and on the Blower Building Control Panel.

Torque switches are provided to de-energize the motor operator if the gate movement becomes obstructed. Refer to the Division 5H4 Contractor's O&M Manual for the manufacturer's literature that describes the setting and operation of the torque switches.

The Remote Transmission Unit in the Control Room in the Blower Building continuously scans and transmits the condition of all status and alarm points to the SCADA system in the Process Control Room in the Main Pumping Station for the Sluice Gates.

(4) SUMP PUMPING EQUIPMENT: JC5-SP-1

The sump pumping equipment in Junction Chamber No. 5 consists of one sump pump and associated 4 hp constant speed motor, designated JC5-SP-1, control panel, cover plates and frames and sump level controls.

For a complete discussion of the sump pumping equipment, operation and controls, refer to the section headed "Sump Pumping Equipment".

(5) EXHAUST FAN: JC5-EF-1

a. DESCRIPTION

The Exhaust Fan, designated JC5-EF-1, provides Junction Chamber No. 5 with 100 percent outside air through a roof mounted gravity intake hood. The exhaust fan is an aluminum, side wall mounted, centrifugal, belt driven type fan with a capacity of 3000 cubic feet per minute.

b. NORMAL OPERATION

The Exhaust Fan is provided with a HAND/OFF/AUTO selector switch located on Temperature Control Panel JC5-TCP-1 and an ON/OFF selector switch located at the unit. When the selector switch is in the AUTO position, the fan will operate through a wall mounted thermostat. When the selector switch is in the HAND position, the fan will operate continuously.

c. START-UP AND SHUTDOWN PROCEDURES

1. Start-Up
   - Place the ON/OFF selector switch located at the unit in the ON position
   - Set the thermostat for the desired temperature
   - Place the HAND/OFF/AUTO selector switch in the AUTO position

2. Shutdown
   - Place the HAND/OFF/AUTO selector switch in the OFF position.

NOTE

If maintenance is to be performed on the fan, place the HAND/OFF/AUTO selector switch in the OFF position and place the ON-OFF selector switch in the OFF position and open the circuit

breaker JC5-PC-82 on Distribution Panel DP-82. Follow approved **Lockout/Tagout** procedures (See Chapter VI, Safety).

d. ALTERNATE OPERATION

The exhaust fan can be controlled to operate continuously by placing the HAND/OFF/AUTO selector switch in the HAND position.

e. MONITORS AND ALARMS

The Exhaust Fan is provided with a running indicator light and an alarm indicating light located on the Temperature Control Panel JC-TCP-1. If the unit fails during operation, the alarm indicating light will be energized on the Temperature Control Panel.

(6) PLANT WATER (See Figure III-SU-UPS-4)

The plant water equipment at Junction Chamber No. 5 consists of piping, fittings, a pressure guage and a hose hydrant. Plant water is supplied to Junction Chamber No. 5 by the hydro-pneumatic supply system located in the Main Pumping Station. The plant water is used for wash down purposes within the structure.

(7) EFFLUENT WATER (See Figure III-SU-UPS-5 through 9)

The effluent water equipment at Junction Chamber No. 5 consists of piping, fittings, and a hose hydrant. Effluent water is supplied to Junction Chamber No. 5 by the general purpose effluent water pumps located in Filter Building No. 1. The effluent water is used for wash down purposes outside of the structure.

(8) PLANT AIR (See Figure III-SU-UPS-1 through 3)

The plant air equipment at Junction Chamber No. 5 consists of piping, hose valves and moisture traps. Compressed air is supplied to Junction Chamber No. 5 by the plant air system which is fed by air compressors located in the Main Pumping Station and in Filter Building No. 2. The plant air equipment supplies air to hose valves located at Junction Chamber No. 5 and is used for general maintenance.

(9) POWER DISTRIBUTION SYSTEM

The power distribution system is shown in detail on the contract plans and various shop drawings. Refer to Table III-DA-NPS-1, Nitrification Pumping Station and Junction Chamber 5 - Facility Equipment Summary for contract plan and shop drawing numbers which pertain to the power distribution system.

C. NITRIFICATION PUMPING STATION WET WELL

(1) DESCRIPTION (SEE FIGURES III-DA-NPS-2 AND 3)

The Nitrification Pumping Station Wet Well is a rectangular basin approximately 38 feet wide by 65 feet long with a basin height of 21.5 feet (see Figure III-DA-NPS-3). The wet well is divided into three sections. Nitrification Pumps designated NPS-NP-1, 2 and 3 draw only from the north wet well area. Nitrification Pump NPS-NP-4 performs as a swing pump and draws from the center wet well area. Nitrification Pumps designated NPS-NP-5, 6 and 7 draws from the south wet well area which is a "mirror image" of the north wet well (see Figure III-DA-NPS-3).

(2) DEWATERING

Dewatering piping and valves are provided to dewater the Nitrification Pumping Station Wet Well. The equipment consists of one suction dewatering line connected to each of the three sections of the wet well, one discharge dewatering line connection, and three manually operated dewatering plug valves.

The three dewatering valves are 8-inch manually operated knife gate valves designed to be in the fully open or fully closed position.

a. NORMAL OPERATION

Under normal operation, the manually operated dewatering knife gate valves are in the fully closed position and the blind flanges are installed on the dewatering line connections.

b. DEWATERING

To dewater a section of the Nitrification Pumping Station Wet Well, use the following procedure:

- Remove the blind flanges from the 8-inch suction and 6-inch discharge dewatering line connections located adjacent to the north wall of the structure
- Connect a portable pump to the dewatering line connections
- Open the appropriate valve to dewater the north, center, or south wet wells
- Start the pump (the wet well contents will be discharged into the Nitrification Pumping Station discharge channel)
- Once the wet well has been completely dewatered, stop the pump and close the appropriate valve on the suction dewatering line connection
- Disconnect the pump and reinstall blind flanges

D. NITRIFICATION PUMPING EQUIPMENT: NPS-NP-1 through 7

(1) DESCRIPTION (SEE FIGURES III-DA-NPS-2 AND 3)

Nitrification Pumping Equipment is provided at the Nitrification Pumping Station to lift primary or carbonaceous effluent or mixed liquor recycle from the wet well to the discharge channel. Wastewater flows from the discharge channel at the Nitrification Pumping Station into the Diffused Air Reactors. The Nitrification Pumps are single-stage, vertical column, submersible, bottom suction, top discharge, axial flow propeller type pumps driven by 201 hp motors. The motors for the Nitrification Pumps, designated NPS-NP-1, 2, 3, 4 and 5, are driven by adjustable frequency drives. The Nitrification Pumps designated NPS-NP-6 and 7, are driven by constant speed motors. At the maximum pump speed of 700 rpm, each Nitrification Pump has a rated capacity of 30,000 gpm (43.2 mgd) at a rated head of 15.5 feet, 25,000 gpm (36.0 mgd) at a head of 22.0 feet and 34,000 gpm (49.0 mgd) at a head of 6.0 feet. At low speed, each pump (NPS-NP-1 through -5) has a rated capacity of 14,000 gpd (20.2 mgd) at a head of 5.0 feet.

The Nitrification Pumping Equipment consists of the seven nitrification pumps and associated drive motors and control instrumentation on the Nitrification Pump Control Panel (NPCP) ASCC-83 and the Blower Building Control Panel (BBCP). Primary operation and control of the Nitrification Pumping Equipment is via the BBCP with secondary operation and control at the NPCP.

The NPCP is located in the Electrical Room of the Blower Building and consists of eight cubicles which contain the following:

- Cubicals 1, 2, 3, 4 and 5 each contain one adjustable frequency drive and control instrumentation for pumps NPS-NP-1, 2, 3, 4 and 5. Control instrumentation at each cubical includes one digital operator keypad, one ten-turn potentiometer, two selector switches, four pushbuttons, three light indicators and one circuit breaker
- Cubicals 6 and 7 each contain full one constant speed drive and control instrumentation for pumps NPS-NP-6 and 7. Control instrumentation at each cubical includes one elapsed time meter, two selector switches, four pushbuttons, three light indicators and one circuit breaker
- Cubical 8 contains the sequence selector switches for automatic operation of NPS-NP-1, 2, 3, 4, 5, 6 and 7

Cubicals 1 - 5 are each provided with a digital operator keypad for controlling adjustable frequency drives for NPS-NP-1 through 5, respectively. Each keypad provides START CONTROL (HAND, OFF and AUTO) keys, SPEED CONTROL (LOCAL and REMOTE) keys, START, STOP and RESET keys, PROGRAMMING/MONITORING/ FUNCTION keys, miscellaneous indicating lights and a two-line character display. Cubicals 1 - 5 are each provided with a NPCP/BBCP selector switch for selecting the location for manual speed control and a ten-turn potentiometer for adjusting the speed of the adjustable frequency pumps. Cubicals 6 and 7 are each provided with an elapsed time meter to indicate running time (displayed at the digital operator keypad on cubicals 1 - 5). Cubicals 1 - 7 are each provided with a HAND/OFF/AUTO selector switch, START, STOP, TEST and RESET pushbuttons, and a circuit breaker. Cubical 8 is provided with a SERIES PUMP START-UP SEQUENCE and a PARALLEL PUMP START-UP SEQUENCE selector switch.

Control instrumentation on the BBCP for NPS-NP-1, 2, 3, 4, 5, 6 and 7 includes five pump speed indicators, designated SI-325, 326, 327, 328 and 329, five ten-turn potentiometers, designated HC-325, 326, 327, 328 and 329, and one SERIES/PARALLEL selector switch for series or parallel mode of operation.

Each Nitrification Pump is provided with an ON/OFF-LOCKOUT selector switch and a TEST pushbutton at the unit.

The function of the selector switches on the NPCP and the BBCP is as follows:

- HAND-OFF-AUTO selector switch located on Cubicles 1-7 on the NPCP: When the selector switch is in the AUTO position, the associated pump will be operated and controlled by the pump programmer. In the OFF position, the associated pump will shut down. In the HAND position, the pump will be available to start manually by START/STOP pushbuttons located at the NPCP and the speed is controlled by a 10-turn potentiometer on the NPCP or the BBCP.
- NPCP-BBCP selector switch located on Cubicles 1-5 on the NPCP: This switch determines which 10-turn potentiometer is active for pump speed control when operating in the HAND position. When in the NPCP position, the speed control potentiometer on the NPCP is active. When in the BBCP position, the speed control potentiometer on the BBCP is active.

- SERIES PUMP STARTUP SEQUENCE selector switch located on Cubicle 8 on the NPCP: the position of the selector switch determines the sequence that the Master Pump Programmer will start and stop the available pumps when set-up for the SERIES mode of operation by selection at the BBCP. The selector switch positions and the associated operational sequences are as follows:

SERIES PUMP STARTUP SEQUENCE (TABLE III-DA-NPS-3)

Switch Position	Lead	1st Lag	2nd Lag	3rd Lag	4th Lag	5th Lag	6th Lag
1	1	2	3	4	5	6(c)	7(c)
2	2	3	4	5	6(c)	7(c)	1
3	3	4	5	6(c)	7(c)	1	2
4	4	5	1	6(c)	7(c)	2	3
5	5	1	2	6(c)	7(c)	3	4

Note: (c) indicates a constant speed pump, all other pumps are variable speed units.

- PARALLEL PUMP STARTUP SEQUENCE selector switch (located on cubicle 8): The position of the selector switch determines the sequence that the pump programmer will start and stop the available pumps when set-up in the PARALLEL mode of operation by selection at the BBCP. The selector switch positions and the associated operational sequences are shown in the table below:

PARALLEL PUMP STARTUP SEQUENCE
(TABLE III-DA-NPS-4)

Switch Position	Lead	1st Lag	2nd Lag	Standby
1	1	2	3	4
2	2	3	1	4
3	3	1	2	4

Additional control instrumentation located on the BBCP and used in conjunction with the instrumentation listed above includes the following:

- SERIES/PARALLEL selector switch. Selection of SERIES places LIC-355 as the controller for the nitrification pumps and the 5-position selector switch at Cubicle 8 as the pump sequence selector. Selection of PARALLEL places FFIC-300 as the controller for the nitrification pumps and the 3-position selector switch at Cubicle 8 as the pump sequence selector.
- Level indicating controller LIC-355. The signal from LIC-355 controls the Nitrification Pumping Equipment when the Nitrification Pumping Station is operated in the SERIES mode.

- Flow indicating controller FFIC-300. The signal from FFIC-300 controls the Nitrification Pumping Equipment when the Nitrification Pumping Station is operated in the PARALLEL mode. FFIC-300 may be configured as a constant setpoint controller or as a ratio controller. In the constant setpoint control configuration, the speed of the Nitrification Pumping Equipment is based on pumping a constant rate of primary effluent diverted to the Diffused Air Biological System (signal from FE-300 in Junction Chamber No. 5). In the ratio control configuration, the speed of the Nitrification Pumping Equipment is based on pumping a constant percentage of the total flow into the plant (sum of signals from MS-4, FE-48 and FE-49).

NOTE

Refer to subsections herein titled "Bubbler System" and "Flow Metering Equipment: FE-300 and FE-301" for further information on LIC-355 and FFIC-300 controllers, respectively.

(2) SERIES OPERATION

a. NORMAL OPERATION

Under normal operation, when operating the biological treatment facilities in series and when controls on the NPCP and the BBCP are positioned as described below the pumps will automatically start and stop in a predetermined sequence controlled by the Master Pump Controller. The program for automatic pump operation is arranged as follows:

- The desired wet well operating elevation is manually selected on the indicating controller (LIC-355) on the BBCP
- Pump operation and speed is controlled automatically by the pump programmer as it tries to maintain the preset wet well level
- For carbonaceous effluent flows of about 42 mgd and less, one variable speed unit will operate at 100 percent or lower speed
- For carbonaceous effluent flows of from about 42 mgd to 84 mgd, two variable speed units will operate at 100 percent or lower speed and equally share the pumping requirement
- For carbonaceous effluent flows of from about 84 mgd to 126 mgd, three variable speed units will operate at 100 percent or lower speed and equally share the pumping requirement
- For carbonaceous effluent flows in excess of about 126 mgd, a constant speed pump could be used depending on the "Series Pump Startup Sequence" position selected. The constant speed pump will operate at about 42 mgd and the remaining variable speed units will operate at 100 percent or lower speed and equally share the pumping requirement
- In the event that any unit should fail to respond to the program signal, the system will move to the next unit in the program and the standby unit is arranged to be automatically included in the operation as the need arises
- The controls are arranged to reverse the sequence on decreasing rates of flow. The first pump to be shut down will always be the last pump started

b. START-UP AND SHUTDOWN PROCEDURES - SERIES MODE

Start-up and shutdown procedures for the Nitrification Pumping Equipment when in series operation are as follows:

1. Start-up (Automatic Operation)
   - Verify that the plant air system is operating and open the plant air supply line valves to the bubbler system located at the Nitrification Pumping Station
   - Close the circuit breakers on for each pump to be in service at the NPCP
   - Verify that the selector switch at each selected pump location is in the ON position
   - Place the series pump start-up sequence selector switch on the NPCP in the desired set-point
   - Place the HAND-OFF-AUTO selector switch on the NPCP in the AUTO position for each selected pump
   - Place the SERIES-PARALLEL selector switch on the BBCP in the SERIES position
   - Verify that sluice gates JC5-SG-3 and -4 are open and that JC5-SG-1 and -2 are closed
   - Verify that sluice gates NPS-SG-1, -2, and -4 are open and that NPS-SG-3 is closed
   - Set the series operation indicating controller on the BBCP to the desired wet well elevation

NOTE

Initial suggested set point is at Elevation 16.00.

   - Press the START pushbutton, located on the NPCP, to initiate operation of the first pump in the sequence selected. All subsequent pumps will be started by the Master Pump Controller

2. Start-up (Manual Operation)
   - Verify that the plant air system is operating and open the compressed air supply line valves to the bubbler tube liquid level measuring system located at the Nitrification Pumping Station
   - Close the circuit breakers on for each pump to be in service at the NPCP
   - Verify that the selector switch at each selected pump location is in the ON position
   - Place the HAND-OFF-AUTO selector switch for each pump on the NPCP in the HAND position
   - Place the NPCP-BBCP selector switch on the NPCP (pumps 1-5 only) in the NPCP or the BBCP position depending upon the control panel in which the pump speed is to be controlled
   - Place the SERIES-PARALLEL selector switch on the BBCP in the SERIES position
   - Verify that sluice gates JC5-SG-3 and -4 are open and that JC5-SG-1 and -2 are closed
   - Verify that sluice gates NPS-SG-1, -2, and -4 are open and that NPS-SG-3 is closed

- Press the START pushbutton, located on the NPCP, to initiate operation of the pumps to be used
- Adjust the 10-turn potentiometer (pumps 1-5 only) on either the NPCP or BBCP, based on the selected control location, to control the discharge of each pump

NOTE

When operating in the manual mode, the operator needs to visually note the wet well level and operate the pump speed in accordance with the noted wet well level.

3. Normal Shutdown
   - Place the HAND-OFF-AUTO selector switch on the NPCP for the associated Nitrification Pump in the OFF position

NOTE

If maintenance is to be performed on a Nitrification Pump, select OFF at the unit and engage the locking device and open the circuit breaker on the NPCP for the associated Nitrification Pump. Follow approved **Lockout/Tagout** procedures (See Chapter VI, Safety).

(3) PARALLEL OPERATION

a. Normal Operation

The biological treatment facilities can be operated in parallel with the HPO treatment facilities when controls on the NPCP and the BBCP are positioned as described below. Pumps NPS-NP-1, -2, and -3 are arranged to pump primary effluent from Junction Chamber No. 5. Pumps NPS-NP-5, -6 , and -7 are arranged to pump mixed liquor recycle back to the influent of the Diffused Air Reactors. Pump NPS-NP-4 is a swing pump and can be arranged to pump primary effluent together with pumps NPS-NP-1, -2 and -3 or can be arranged to pump mixed liquor recycle together with pumps NPS-NP-5, -6, and -7. Pumps NPS-NP-1, -2, and -3 (and -4 if selected) will automatically start and stop in a predetermined sequence controlled by the Master Pump Controller. Pumps NPS-NP-5, -6, and -7 are always manually controlled. The program for automatic control of pumps NPS-NP-1, -2, and -3 (and -4 if selected) can be arranged in two ways, one for maintaining a percentage of the total plant flow and one for maintaining a constant rate of flow to the Diffused Air Reactors.

1. Constant Percentage of Flow

A constant percentage of the plant flow is selected it is desired to have the daily variations in flow rate to be shared proportionally between the Diffused Air Reactors and the HPO system. The Diffused Air Reactors are designed to treat up to 26 mgd in the parallel mode of operation; the remaining 70 mgd of plant influent flow would be treated at the HPO

system. Based on this design criteria a typical percentage to select may be 27% (26 mgd/96 mgd). The actual flow to the Diffused Air Reactors would then be 27% of the flow going to the biological system which is the plant influent flow, but also includes the plant recycle flows such as backwash water and belt filter press filtrate.

The program for automatic pump operation is arranged as follows:

- The desired percentage of plant flow is manually selected on the flow indicating controller (FFIC-300) on the BBCP. The controller continuously compares the flow of primary effluent through flow meter FE-300 at Junction Chamber No. 5 to the sum of the flow through meters MS-4, FE-48, and FE-49 ahead of the Denitrification Filters.
- Pump operation and speed for pumps NPS-NP-1, -2, and -3 (and -4 if selected) is controlled automatically by the Master Pump Controller as it tries to maintain the preset flow percentage

2. Constant Rate of Flow

A constant rate of flow to the Diffused Air Reactors may be selected. The daily variations of flow rates under this mode of operation would be accepted by the HPO system. This way would be selected if it is desired to keep the operation of the Diffused Air Reactors as simple as possible by not having daily variations of flow. The Diffused Air Reactors are designed to treat up to 26 mgd of the plant influent flow in the parallel mode of operation. If this mode of operation is selected, the operator would select a rate of flow to be pumped continuosly to the Diffused Air Reactors. The selected flow rate will need to include the plant influent flow as well as the plant recycle flows from such sources as the Denitrification Filter backwash water and belt filter press filtrate. The total plant recycle flow is typically 20-40% of the plant influent flow rate. Therefore, if it were desired to have 26 mgd of plant influent flow sent to the Diffused Air Reactors, a number greater than 26 mgd would need to be selected to account for the plant recycle flows. For example, if the plant recycle flows are assumed to be 25% of the plant influent flow, the selected flow to get 26 mgd of plant influent flow would be 32.5 mgd (125% * 26 mgd).

The program for automatic pump operation is arranged as follows:

- The desired Diffused Air Reactor influent flow is manually selected on the flow indicating controller (FFIC-300) on the BBCP. The controller continuously monitors the flow through meter FE-300 and adjusts pump operation to maintain the set flow.
- Pump operation and speed for pumps NPS-NP-1, -2, and -3 (and -4 if selected) is controlled automatically by the Master Pump Controller as it tries to maintain the preset flow rate

3. Mixed Liquor Recycle Flow

When it is desired to biologically denitrify in the Diffused Air Reactors, mixed liquor must be recycled to provide nitrate to the influent end of the reactors (See Chapter II). The south

side of the Nitrification Pumping Station wet well is arranged to receive the mixed liquor flow. Pumps NPS-NP-5, -6 and -7 (and -4 if selected) may be used to pump the recycled mixed liquor back to the process. These pumps are operated manually. The quantity of mixed liquor recycled can be observed on the BBCP at the indicator labeled ANOXIC RECYCLE.

b. START-UP AND SHUTDOWN PROCEDURES - PARALLEL MODE

Start-up and shutdown procedures for the Nitrification Pumping Equipment when operating under the parallel mode are as follows:

1. Start-up (Automatic Operation - NPS-NP-1, 2, 3 and 4)
   - Verify the ON/OFF-LOCKOUT selector switch located at each pump motor at the Nitrification Pumping Station is in the ON position
   - Verify the circuit breakers on Cubicles 1 - 7 at the NPCP are closed
   - Place the HAND/OFF/AUTO selector switch on Cubicles 1 - 3 (and -4 if selected to operate in the sequence) at the NPCP in the AUTO position
   - Place the HAND/OFF/AUTO selector switch on Cubicles 5 - 7 (and -4 if selected to operate to pump mixed liquor) at the NPCP in the HAND position
   - Select desired configuration for flow indicating controller FFIC-300 located at the BBCP for control of Nitrification Pumping Equipment either as a constant percentage of flow or as a constant flow rate
   - Close Sluice Gates JC5-SG-1, -3, and -4 and open Sluice Gate JC-SG-2 in Junction Chamber No. 5 to switch the Diffused Air Biological System from the series mode of operation to the parallel mode of operation. Refer to subsection herein titled "Sluice Gates: JC5-SG-1, 2, 3 and 4"
   - Place stop logs or a stop plate in the effluent stop log groove on the western most transfer conduit at Junction Chamber No. 5 to prevent primary effluent from be transferred to the south side wet well, which is to handle mixed liquor only
   - Close Sluice Gate NPS-SG-1 or -2 in the Nitrification Pumping Station to isolate the north and south wet wells, depending on whether pump NPS-NP-4 is to work with the north pumps or the south pumps. Refer to subsection herein titled "Sluice Gates: NPS-SG-1, 2, 3 and 4"
   - If biologically denitrifying in the Diffused Air Reactors:
     - Close Sluice Gate NPS-SG-4 to force mixing of the recycled mixed liquor with the primary effluent
     - Open Sluice Gate NPS-SG-3 to allow mixed liquor into the south wet well
   - Place the PARALLEL PUMP START-UP SEQUENCE selector switch on Cubicle 8 at the NPCP to the desired position (refer to Table III-DA-NPS-4)
   - Place the SERIES/PARALLEL selector switch on the BBCP in the PARALLEL position
   - Press the START pushbutton, located at the NPCP, to initiate operation of the first primary effluent pump in the sequence selected. All subsequent pumps will be started by the Master Pump Controller

- Press the START pushbutton for each pump NPS-NP-4, -5, -6, or -7 which is desired to be in service
- For pumps NPS-NP-4 and -5 only, on the NPCP/BBCP selector switch on the NPCP select BBCP to control the pump speed manually from the BBCP

2. Alternate Operation - Parallel Mode (Manual Operation - NPS-NP-1, 2, 3 and 4)
   - Verify the ON/OFF-LOCKOUT selector switch located at each pump motor at the Nitrification Pumping Station is in the ON position
   - Verify the circuit breakers on cubicals 1 - 7 at the NPCP are closed
   - Verify the HAND/OFF/AUTO selector switch on cubicals 1 - 7 at the NPCP is in the HAND position
   - Close Sluice Gates JC5-SG-3 and 4 and open Sluice Gate JC-SG-2 in Junction Chamber No. 5 to switch the Diffused Air Biological System from the series mode of operation to the parallel mode of operation. Refer to subsection herein titled "Sluice Gates: JC5-SG-1, 2, 3 and 4"
   - Close Sluice Gate NPS-SG-1 or -2 in the Nitrification Pumping Station to isolate the north and south wet wells, depending on whether pump NPS-NP-4 is to work with the north pumps or the south pumps. Refer to subsection herein titled "Sluice Gates: NPS-SG-1, 2, 3 and 4"
   - If biologically denitrifying in the Diffused Air Reactors:
     - Close Sluice Gate NPS-SG-4 to force mixing of the recycled mixed liquor with the primary effluent
     - Open Sluice Gate NPS-SG-3 to allow mixed liquor into the south wet well
   - Place the NPCP/BBCP selector switch on Cubicle 1 - 4 at the NPCP in the NPCP or BBCP position depending on the location from which the pump speed for NPS-NP-1 through 4 is to be manually controlled
   - Press the START pushbutton, located on Cubicle 1 - 4, to initiate manual operation of the selected pumps
   - On the NPCP/BBCP selector switch for each pump on the NPCP select BBCP to control the pump speed manually from the BBCP
   - Based on the wet well liquid level indicated on LIC-355 on the BBCP, adjust the ten-turn potentiometer at the BBCP to select the operating speed for NPS-NP-1, 2, 3 and 4
   - Control pumps NPS-NP-5, -6, and -7 as described above under "AUTOMATIC OPERATION".

3. Normal Shutdown - Parallel Mode
   - For Nitrification Pumps NPS-NP-1, 2, 3 and 4, place the HAND/OFF/AUTO selector switch located on cubicals 1 - 4 at the NPCP in the OFF position for the associated pump

- For Nitrification Pumps NPS-NP-5, 6 and 7, depress the STOP pushbutton located at cubicals 5 - 7 at the NPCP and place the HAND/OFF/AUTO selector switch located on cubicals 5 - 7 at the NPCP in the OFF position

NOTE

If maintenance is to be performed on a unit, place the HAND/OFF/AUTO selector switch in the OFF position, open the circuit breaker on the associated cubicle, place the ON/OFF-LOCKOUT selector switch located at the pump motor in the OFF position and engage the locking device on the selector switch. Follow approved **Lockout/Tagout** procedures (See Chapter VI, Safety).

(4) MONITORS AND ALARMS

Each Nitrification Pump is provided with built-in sensors to monitor the unit and signal a visual alarm at the Nitrification Pump Control Panel (NPCP) and audible and visual alarms on the annuciator panel located at the Blower Building Control Panel (BBCP). Visual alarms on cubicals 1 - 5 at the NPCP occur at the digital operator keypads and at the discrete indicating lights for Nitrification Pumps NPS-NP-1 through 5, respectively. Visual alarms on cubicles 6 and 7 at the NPCP occur at the discrete indicating light.

The function of the built-in sensors on the pumps are as follows:

- Monitor water penetration into the motor
- Monitor temperature of pump main bearing
- Monitor temperature of motor stator windings

The pump will shut down for the following conditions:

- Motor overload
- Ground fault
- Phase fault/reversal
- High winding temperature
- Motor casing leakage
- Lower seal leakage
- Bearing high temperature

Alarms will signal on the Annuciator Panel on the BBCP for the following fault conditions:

- Pump Failure
- Motor Winding High Temperature
- Motor Bearing High Temperature
- Motor Leakage

The discrete indicating lights on cubicles 1 - 7 at the NPCP include indicators for the following functions:

- RUN
- OFF
- ALARM

The digital operator keypads on cubicles 1 - 5 at the NPCP include indicating lights for the following functions:

- MONITOR
- PROGRAM
- DRIVE READY
- UP TO SPEED
- RUN
- ALARM
- FAULT
- HAND
- OFF
- AUTO
- LOCAL
- REMOTE
- F1
- F2

The digital operator keypads on cubicles 1 - 5 at the NPCP provide a two line display for pump speed and elapsed time indication. Refer to Division 5H4 Contractor's O & M Manual for further discussion on display information.

Speed indicators and elapsed time meters are provided on cubicles 6 and 7 at the NPCP for Nitrification Pumps NPS-NP-6 and 7, respectively.

The discrete indicating lights on the BBCP include indicators for Nitrification Pumps NPS-NP-1, 2, 3, 4 and 5 for the following functions:

- RUN/OFF
- NPCP/BBCP
- HAND/AUTO

Nitrification Pumps NPS-NP-6 and 7 have RUN/OFF indicating lights on the BBCP.

Speed indicators are provided on the BBCP for Nitrification Pumps NPS-NP-1, 2, 3, 4 and 5, respectively.

The Remote Transmission Unit in the Control Room in the Blower Building continuously scans and transmits the condition of all status and alarm points to the SCADA system in the Process Control Room in the Main Pumping Station for the Nitrification Pumps.

E. SLUICE GATES : NPS-SG-1 through 4

(1) DESCRIPTION (SEE FIGURE III-DA-NPS-3)

Sluice gates are provided to control wastewater flow into and out of the Nitrification Pumping Station (see Figure III-DA-NPS-2). Table III-DA-NPS-5, Function of Sluice Gates indicates the contract plan designation number, size, type operator and function of the sluice gates.

TABLE III-DA-NPS-5 - FUNCTION OF SLUICE GATES

CONTRACT PLAN DESIGNATION	SIZE (INCHES)	OPERATOR TYPE	FUNCTION
NPS-SG-1	84 x 96	Electric Motor	Permits flow to enter the center wet well from the north wet well (in open position)
NPS-SG-2	84 x 96	Electric Motor	Permits flow to enter the center wet well from the south wet well (in open position)
NPS-SG-3	72 x 72	Electric Motor	In the parallel mode of operation, permits flow from the Mixed Liquor Conduit to enter the south wet well for recycle purposes (in open position)
NPS-SG-4	84 x 72	Electric Motor	In the closed position, forces the mixed liquor from pumps NPS-NP-4, -5, -6, and -7 to blend with the primary effluent discharge from the other pumps (closed in the parallel mode only)

Stop log grooves are provided at each gate to allow isolation of the gate for maintenance purposes without having to discontinue operation.

(2) NORMAL OPERATION

Each sluice gate is provided with a LOCAL/OFF/REMOTE selectorswitch and OPEN, CLOSE and STOP pushbuttons at each unit and OPEN and CLOSE pushbuttons on the Blower Building Control Panel (BBCP). Under normal operation, the LOCAL/OFF/REMOTE selector switch will be in the REMOTE position and the gates will be controlled by the OPEN and CLOSE pushbuttons on the BBCP. Each gate is normally open or closed depending if the secondary treatment system is in the series or parallel mode of operation as described above under the section headed "NITRIFICATION PUMPING EQUIPMENT".

(3) START-UP AND SHUTDOWN PROCEDURES

To start-up or shutdown the motor operated sluice gates, use the following procedures:

a. START-UP

- Close the associated circuit breaker on MCC-82 in the Electrical Room of the Blower Building
- Place the LOCAL/OFF/REMOTE selector switch at the gate in the REMOTE position
- Press the OPEN or CLOSE pushbutton on the Blower Building Control Panel

NOTE

Limit switches are provided to de-energize the motor operator when the gate arrives at the completely OPEN or CLOSED position.

b. SHUTDOWN

- Press the STOP pushbutton at the sluice gate

NOTE

If maintenance is to be performed on the unit, press the STOP pushbutton at the unit, open the circuit breaker on MCC-82 and engage the locking device on the STOP pushbutton. Follow approved **Lockout/Tagout** procedures (See Chapter VI, Safety).

(4) ALTERNATE OPERATION

a. LOCAL OPERATION

Each motor operator can be controlled at the sluice gate as follows:

- Place the LOCAL/OFF/REMOTE selector switch in the LOCAL position
- Press the OPEN or CLOSE pushbuttons at the unit

b. MANUAL OPERATION

Each motor operator is provided with a handwheel for manual operation as follows:

- Place the LOCAL/OFF/REMOTE selector switch in the OFF position
- Depress the motor operator declutching lever
- Turn handwheel counterclockwise to open or clockwise to close gate

NOTE

Energizing the motor operator automatically disengages the declutching lever and returns gate to motor operation.

(5) MONITORS AND ALARMS

Torque switches are provided to de-energize the motor operator if the gate movement becomes obstructed. Refer to the Division 5H4 Contractor's O&M Manual for the manufacturer's literature that describes the setting and operation of the torque switches.

Position indicating lights are provided at each motor operator. One light is provided to indicate the completely OPEN position and one light is provided to indicate the completely CLOSED position. When both indicating lights are on, the gate is in an INTERMEDIATE position. Each gate is also provided with OPEN and CLOSED indicating lights on the Blower Building Control Panel.

The Remote Transmission Unit in the Control Room in the Blower Building continuously scans and transmits the condition of all status and alarm points to the SCADA system in the Process Control Room in the Main Pumping Station for the Sluice Gates.

F. ALKALINITY MONITORING SYSTEM

An Alkalinity Monitoring System has been provided in the Diffused Air Reactors. Nine sample pumps have been included as part of the system. One of the pumps, designated NPS-SP-5, has been located in the Nitrification Pumping Station. This pump takes a sample of reactor influent from the Diffused Air Reactor Influent Channel for testing in the Alkalinity Monitoring Station. For further information on the Alkalinity Monitoring System, refer to the subsection titled "Alkalinity Monitoring System" within the section headed "Diffused Air Reactors" (see Figure III-DA-DAR-1).

G. BUBBLER SYSTEM

(1) DESCRIPTION (SEE FIGURES III-DA-NPS-2 AND 3)

A bubbler system is provided in the Nitrification Pumping Station to measure the water level in the wet well. The bubbler system consists of a bubbler control panel, two bubbler tubes, a level transmitter, filter/regulator, purgemeters, level switches, level gauges, valves and associated piping and fittings. The bubbler control panel is fed by the plant air system. The panel is also equipped with a connection for a portable air compressor to provide the air required in the case that the plant air system is out of service.

(2) NORMAL OPERATION

The bubbler control panel contains ON/OFF selector switches for the plant shutoff and auxiliary (portable air compressor) shutoff valves, a NORTH/OFF/SOUTH wetwell selector switch, a NORMAL/OFF/BLEED instrument air valve selector switch and NORMAL/PURGE/OFF selector switches for the north and south purge air valves. Under normal operation, the ON/OFF plant shutoff selector switch will be in the ON position, the ON/OFF selector switch for the auxiliary shutoff will be in the OFF position, the NORMAL/OFF/BLEED and NORMAL/PURGE/OFF selector switches will be in the NORMAL position and the NORTH/OFF/SOUTH wet well selector switch will be in the NORTH or SOUTH position depending on the wetwell level to be measured.

(3) START-UP, SHUTDOWN AND PURGING PROCEDURES

To start-up, shutdown or purge the bubbler system, use the following procedures:

a. START-UP

- Place the ON/OFF plant shutoff selector switch on the bubbler panel in the ON position
- Place the ON/OFF auxiliary shutoff selector switch in the OFF position
- Place the NORMAL/OFF/BLEED and NORMAL/PURGE/OFF selector switches in the NORMAL position
- Place the NORTH/OFF/SOUTH wetwell selector switch in the NORTH or SOUTH position depending on the wetwell to be measured

b. SHUTDOWN

- Place the NORTH/OFF/SOUTH wetwell selector switch in the OFF position

c. PURGING

- Place the NORMAL/OFF/BLEED instrument air valve selector switch in the OFF position
- Place the NORMAL/PURGE/OFF purge air valve selector switch for the wet well to be purged in the PURGE position
- Wait 30 seconds
- Place the NORMAL/PURGE/OFF selector switch in the NORMAL position
- Wait 20 seconds
- Place the NORMAL/OFF/BLEED instrument air valve selectorswitch in the NORMAL position

(4) MONITORS AND ALARMS

The bubbler system has a level indicator on the Blower Building Control Panel.

A high level probe is also located on the discharge channel of the Nitrification Pumping Station. The probe is provided to indicate high water level in the channel. An alarm horn indicating high water level in the Diffused Air Reactor Influent Channel is located on top of the bubbler panel.

NOTE

If the level horn is activated, the operator should immediately check that all influent sluice and slide gates are open to the Diffused Air Reactors. Immediate action will be required to prevent overflow of the channel.

H. SANITARY SEWER AND SPENT COOLING WATER RETURN

Sanitary waste and spent cooling water return pipelines terminate at the Nitrification Pumping Station discharge channel. The sanitary waste discharge is from the pumping station serving the restroom located

in the Blower Building Control Room. The spent cooling water return is from the air conditioning unit located in the Blower Building.

I. EFFLUENT WATER (SEE FIGURE III-SU-UPS-5 THROUGH 9)

The effluent water equipment at the Nitrification Pumping Station consists of piping, fittings and hose hydrants. The effluent water hose connections are used for wash down purposes.

Effluent water is supplied to the Nitrification Pumping Station by the general purpose effluent water pumps located in Filter Building No. 1.

J. PLANT AIR (SEE FIGURE III-SU-UPS 1 THROUGH 3)

The plant air equipment at the Nitrification Pumping Station consists of piping, hose fitting and a moisture trap. Compressed air is supplied to the Nitrification Pumping Station by the plant air system which is fed by air compressors located in the Main Pumping Station and Filter Building No. 2.

Plant air equipment supplies air to the liquid level bubbler tubes and the hose connections.

K. POWER DISTRIBUTION SYSTEM

The power distribution system is shown in detail on the contract plans and various shop drawings. Refer to Table III-DA-NPS-1, Nitrification Pumping Station and Junction Chamber No. 5 - Facility Equipment Summary for Contract plan and shop drawing numbers which pertain to the power distribution system.

CHAPTER III
OPERATION AND CONTROL

III-GN GENERAL

This chapter describes the structures at the Howard F. Curren Advanced Wastewater Treatment Plant, the equipment within or attached to those structures, and the procedures for operation and controlling the structures and equipment to ensure that the various processes function within design parameters. Where processes or equipment can be operated in different modes, such alternate modes of operation are presented.

Various process and equipment sensors have been provided to monitor process and equipment status, process functions, atmosphere at selected locations, equipment protective devices and the most common equipment mechanical failures. Process and equipment monitors are described in this chapter in the text for the process or equipment with which they are associated.

The process and equipment monitors which have been provided and which are described in this chapter monitor specific functions and common operating problems which are peculiar to the Howard F. Curren Advanced Wastewater Treatment Facility. Operating parameters which are common to a type of process (for example: phosphorus removal in activated sludge plants by mineral addition) or equipment systems (for example: chemical handling and storage equipment) which may be found at the Howard F. Curren Advanced Wastewater Treatment Plant are presented in the following U.S. Environmental Protection Agency Technology Transfer Manuals:

- Monitoring Industrial Wastewater
- Methods of Chemical Analysis of Water and Wastes
- Analytical Quality Control
- Sulfide Control in Sanitary Sewerage Systems
- Suspended Solids Removal
- Phosphorus Removal
- Nitrogen Control
- Sludge Treatment and Disposal

Flow diagrams which supplement the text are provided as figures for Chapter III, Operation and Control and are included in Volume IV, Figures.

III-OB-MPS MAIN PUMPING STATION (010)

A. GENERAL

The Main Pumping Station is a three level structure located along the west wall of the High Purity Oxygen (HPO) Reactors. This structure contains the following equipment and systems:

- **Sluice Gates**
- **Main Sewage Pumps**
- **Scum Transfer Pumps**
- **Dewatering Pump**
- **Process Air Blowers**
- **Process Air Meter**
- **Plant Air Equipment**
- **Plant Water Equipment**
- **Standby Generators**
- **Standby Generator Starting Air System**
- **Standby Generator Fuel Oil Supply System**
- **Hoisting Equipment**
- **Combustible Gas Detection System**
- **Sewage Sampling Equipment**
- **Sump Pumps**
- **Heating, Ventilation, and Air Conditioning Equipment**
- **Power Distribution System**
- **Spent Cooling Water Return Pumps**
- **Liquid Alum Pumping Equipment**
- **Phosphate Measuring Equipment**

Degritted sewage can flow to the Main Pumping Station Wet Well from Junction Chamber and Meter Vault No. 2 by gravity through a 66-inch diameter underground conduit. Primary Sedimentation Tank Effluent can flow to the Main Pumping Station Wet Well from the Primary Sedimentation Tanks by gravity through two 66-inch diameter underground conduits. (Normally, all flow receives primary treatment and no degritted sewage flows to the wet well.)

The combined flow is pumped to the 8-foot 0-inch wide by 22-foot 9-inch deep Main Pumping Station Discharge Channel. The sewage then flows by gravity to the Carbonaceous Stage Reactors Influent Channel (See Figures III-OB-MPS-1 and III-OB-MPS-2).

Refer to Table III-OB-MPS-1, Facility Equipment Summary - Main Pumping Station, for control numbers, manufacturers, equipment capacities, and operation, maintenance, contract plan, and shop drawing references. Refer to Division 4H4 and Division 5H4 Contractor's O&M Manual for Manufacturer's Service Manuals pertaining to equipment installed in the Main Pumping Station.

B. SLUICE GATES: MP-SG-1, 2, 3, 4, 5, 6, 7, 8, 9, and 10

(1) DESCRIPTION

Sluice Gates MP-SG-1, 2, 3, 4, 5, 6, and 7, located in the Main Pumping Station Wet Well, are provided to control sewage flow to the Main Sewage Pumps. Sluice Gate MP-SG-8, located in the Main Pumping Station Wet Well is provided to control flow from the Main Drain into the Main Pumping Station Wet Well. Sluice Gate MP-SG-9, located in the Dewatering Sump, is provided to control flow from the Main Drain into the Dewatering Sump. Sluice Gate MP-SG-10, located in the Main Pumping Station Discharge Channel is provided to control flow from the Main Pumping Station Discharge Channel to Junction Chamber No.5 for bypass to the Post Aeration Chlorination Tanks or when the plant is in the parallel treatment mode of operation. Table III-OB-MPS-2 indicates the contract plan designation number, size, type operator, and function of the sluice gates.

TABLE III-OB-MPS-2 - MAIN PUMPING STATION

GATE CONTRACT PLAN DESIGNATION	SIZE (INCHES)	OPERATOR TYPE	FUNCTION
MP-SG-1	48	Electric Motor	Permits sewage flow into Main Sewage Pump MP-MSP-1 suction (in open position)
MP-SG-2	48	Electric Motor	Permits sewage flow into Main Sewage Pump MS-MSP-2 suction (in open position)
MP-SG-3	48	Electric Motor	Permits sewage flow into Main Sewage Pump MP-MSP-3 suction (in open position)
MP-SG-4	48	Electric Motor	Permits sewage flow into Main Sewage Pump MP-MSP-4 suction (in open position)
MP-SG-5	48	Electric Motor	Permits sewage flow into Main Sewage Pump MP-MSP-5 suction (in open position)
MP-SG-6	48	Electric Motor	Permits sewage flow into Main Sewage Pump MP-MSP-6 suction (in open position)
MP-SG-7	48 X 36	Electric Motor	Permits sewage flow into Main Sewage Pump MP-MSP-7 suction (in open position)

MP-SG-8	48 X 36	Electric Motor	Permits Main Drain to flow into the Main Pumping Station Wet Well (in open position)
MP-SG-9	48 X 36	Electric Motor	Permits Main Drain to flow into the dewatering sump (in open position)
MP-SG-10	66 x 66	Electric Motor	Permits pump discharge to flow to Junction Chamber No.5.

Stop log grooves are provided in the Main Pumping Station Wet Well to isolate each of the sluice gates and to separate portions of the Main Pumping Station Wet Well (see Figures III-OB-MPS-1 and III-OB-MPS-2).

(2) NORMAL OPERATION

Under normal operation, each sluice gate is intended to be completely open or completely closed. Sluice Gates MP-SG-1, 2, 5, 6, and 7 are provided with OPEN-CLOSE-STOP push buttons at the units and OPEN-CLOSE push buttons and REMOTE-OFF-LOCAL selector switches on Main Sewage Pump Control Panel MCC-30. Sluice Gates MP-SG-3 and 4 are provided with OPEN-CLOSE-STOP push buttons at the units and OPEN-CLOSE push buttons and REMOTE-OFF-LOCAL selector switches on Main Sewage Pump Control Panel ASCC-30A. Under normal operation, when the REMOTE-OFF-LOCAL selector switch is in the REMOTE position, each sluice gate is operable from MCC-30 or ASCC-30A. When the REMOTE-OFF-LOCAL selector switch is in the LOCAL position, each sluice gate is operable from the unit mounted controls. The STOP push button at the unit is operable at all times.

Sluice Gates MP-SG-8, 9, and 10 are provided with unit mounted OPEN-CLOSE-STOP push buttons.

Duplicate push buttons are provided on the Dewatering and Scum Pump Control Panel for MP-SG-8 and 9. Under normal operation, both push button stations are operable.

(3) START-UP AND SHUTDOWN PROCEDURES

To start up and shut down the sluice gates, use the following procedures:

a. START-UP

- Close the circuit breaker on Motor Control Center MCC-31 for Sluice Gates MP-SG-1 thru MP-SG-9 or on Motor Control Center MCC-32 for Sluice Gate MP-SG-10

- Place the REMOTE-OFF-LOCAL selector switches for Sluice Gates MP-SG-1, 2, 5, 6, and 7 on Main Sewage Pump Control Panel MCC-30 and Sluice Gates MP-SG-3 and MP-SG-4 on Main Sewage Pump Control Panel ASCC-30A in the REMOTE position

- Depress the OPEN or CLOSE push button for Sluice Gate MP-SG-1, 2, 3, 4, 5, 6, or 7 on MCC-30 or ASCC-30A

- Depress the OPEN or CLOSE push button for Sluice Gate MP-SG-8 or 9 at the unit or on the Dewatering and Scum Pump Control Panel

- Depress the OPEN or CLOSE push button for Sluice Gate MP-SG-10 at the unit

NOTES

Limit switches are provided to de-energize the motor operators when the gates arrive in the completely OPEN or CLOSED positions.

An interlock is provided to prevent a Main Sewage Pump starting until its associated sluice gate is at least 75 percent open.

b. SHUT-DOWN

- For Sluice Gates MP-SG-1, 2, 3, 4, 5, 6, 7 and 10 depress the STOP push button on the units. For Sluice Gate MP-SG-8 and 9, depress the STOP push button at the unit or on the Dewatering and Scum Pump Control Panel.

NOTE

If maintenance is to be performed on MP-SG-1 thru 9 open the circuit breaker on Motor Control Center MCC-31 and engage the locking device on the STOP button. For Sluice Gate MP-SG-10, open the circuit breaker on MCC-32 and engage the locking device on the STOP button. Follow approved **Lockout/Tagout** procedures (See Chapter VI, Safety).

(4) ALTERNATE OPERATION

a. MANUAL OPERATION

Each motor operator is provided with a handwheel for manual operation as follows:

- Depress the motor operator declutching lever

- Turn the handwheel counterclockwise to open or clockwise to close the gate

NOTE

Energizing the motor operator automatically disengages the declutching lever and returns the gate to motor operation.

(5) MONITORS

Torque switches are provided to de-energize the motor operator if the gate movement becomes obstructed. Refer to Section 22 of the Division 4H4 and Section (*) of the Division 5H4 Contractor's O&M Manual for

Sluice Gates MP-SG-1, 2, 5, 6, and 7 and MP-SG-3 and 4 are provided with gate position indicating lights on MCC-30 and ASCC-30A, respectively. Each gate is also provided with local operational indicating lights at the associated Motor Control Center.

Sluice Gates MP-SG-8 and 9 are provided with gate position indicating lights on the Dewatering and Scum Pump Control Panel.

C. MAIN SEWAGE PUMPS: MP-MSP-1, 2, 3, 4, 5, 6, and 7

(1) DESCRIPTION

The main sewage pumps are provided to pump the primary treated wastewater and recycle waters to the Main Sewage Pumps Discharge Channel (see Figures III-OB-MPS-1 to III-OB-MPS-3).

The main sewage pumping equipment consists of 7 Main Sewage Pumps, Designated MP-MSP-1, 2, 3, 4, 5, 6, and 7 and associated drive units and controls.
The main sewage pumps are single-stage, vertical shaft, nonclogging, bottom suction-side discharge, mixed flow type pumps (refer to Table III-OB-MPS-3 for additional pump and motor information).

Table III-OB-MPS-3 MAIN PUMPING STATION - PUMP RATING DATA

RATING DATA	PUMPING UNITS			REMARKS
	MP-MSP-1, 6 AND 7	MP-MSP-3 AND 4	MP-MSP-2 AND 5	
Nominal Rated Capacity	40 mgd	50 mgd	40 mgd	See Figures III-OB-MPS-4 to III-OB-MPS-6
Rated Head	33 ft	40 ft	33 ft	
Maximum Pump Speed	425 rpm	395	436.5 rpm	
Motor Rated HP	300 HP	450 HP	300 HP	
Drive	variable speed drive of the eddy current coupling type	adjustable frequency drive	constant speed drive	

The main sewage pumps are operated and controlled from the Main Sewage Pump Control Panel MCC-30 and ASCC-30A. The Main Sewage Pump Control Panel MCC-30 consists of eleven cubicles which contain the following:

- Cubicles Nos. 1, 9, and 10 designated "Main Sewage Pump No. 1 MP-MSP-1", "Main Sewage Pump No. 6 MP-MSP-6"and "Main Sewage Pump No. 7 MP-MSP-7", respectively, are the variable speed main sewage pumps control cubicles and each is provided with various front mounted indicators, push buttons, selector switches and like devices. Refer to Section 44 of the Division 4H4 Contractor's O & M Manual for detailed drawings of the cubicles

- Cubicle No. 2 and No. 8, designated "Main Sewage Pump No. 2 MP-MSP-2", and "Main Sewage Pump No. 5 MP-MSP-5", respectively, are the constant speed main sewage pumps control cubicles and each is provided with various front mounted indicators, push buttons, selector switches and like devices. Refer to Section 44 of the Division 4H4 Contractor's O & M Manual for detailed drawings of the cubicles

- Cubicle No. 3 and No. 4, designated "Main Sewage Pump No. 3 MP-MSP-3" and "Main Sewage Pump No. 4 MP-MSP-4", respectively, are feeder circuit breakers for adjustable frequency drives in ASCC-30A.

- Cubicle No. 5 and No. 7, designated "Main Breaker Bus No. 1", and "Main Breaker Bus No. 2", respectively, are each provided with an ammeter and ammeter switch, a voltmeter switch, a ground sensing relay and breaker handle with Kirk Key Interlocks (interlocked with Tie Breaker Cubicle No. 6, see below) to prevent more than two breakers from being closed at the same time

- Cubicle No. 6, designated "Tie Breaker", is provided with a 60 ampere breaker and handle tie breaker handle with Kirk Key Interlock (interlocked with Main Breaker Bus No. 1 and No. 2, see above) to prevent more than two breaker from being closed at the same time

- Cubicle No. 11, designated "Main Control Panel", contains the Pump Programer and Speed Controller and Bubbler Tube Liquid Level System Controls. The cubicle is provided with various front mounted indicators, push buttons, selector switches and like devices. Refer to Section 44 of the Division 4H4 O & M Manual for detailed drawings of the cubicles

The Main Sewage Pump Control Panel ASCC-30A consists of two units of three cubicles each which contain the following:

- Unit No. 1 and No. 2 designated "Main Sewage Pump No. 3 MP-MSP-3" and "Main Sewage Pump No. 4 MP-MSP-4", respectively, are variable frequency speed control units and each is provided with various front mounted indicators, push buttons, selector switches and a like devices. Refer to Division 5H4 Contractor's O&M Manual for detailed drawing of these units.

(2) NORMAL OPERATION

The main sewage pumps are controlled from the Main Sewage Pump Control Panel MCC-30 and ASCC-30A. Under normal operation, when the controls on MCC-30 and ASCC-30A are positioned as described under "START-UP and SHUTDOWN PROCEDURES," the pumps will automatically start and stop in a predetermined sequence controlled by the Pump Controller and Bubbler Tube Liquid Level System.

The program for automatic operations is arranged as follows:

- The bubbler Tube Liquid Level System is preset to maintain the wet well liquid level at elevation plus 3.50.

- The firm pumping capacity of the facility is 250 mgd and is provided by four (4) variable speed pumping units (170 mgd), and two (2) constant speed pumping units (80 mgd). One 50-mgd variable speed unit is designated for stand-by service.

- Speeding up or slowing down of the variable speed units and starting and stopping of the constant speed units is accomplished by the Pump Controller in response to changes in sewage flow into the wet well as reflected by variations of the preset wet well water level elevation. The response of the controls is such that the actual changes in water level is negligible.

- In the event that any unit should fail to respond to the program signal, the system will move to the next unit in the program and the standby unit is arranged to be automatically included in the operation as the need arises.

- The control equipment is designed to provide the operation for the various flow ranges in a smooth and efficient manner and on a continuous basis. System controls are continuously responsive to the signal from the Bubbler Tube Liquid Level System equipment to insure that the variable speed pumps accurately operate to provide pumping for all variations in sewage flows as described above.

- The controls are arranged to shut down one pump at a time on falling wet well liquid level, and the first pump to be shut down will always be the last pump to start.

The function of the selector switches, which are provided on the various cubicles of Motor Control Panels MCC-30 and ASCC-30A are as follows:

- MANUAL-OFF-AUTO selector switches: When in the AUTO position, the associated pump will be operated and controlled by the Pump Controller. In the OFF position, the associated pump is shut down. In the MANUAL position, the pump is operated and controlled locally by its associated START-STOP-EMERGENCY STOP push buttons.

NOTES

A push button has been installed to close transition between AUTO and MANUAL positions.

The MANUAL-OFF-AUTO selector switches in ASCC-30A also perform as a MANUAL-AUTO speed selector switch.

- MANUAL-AUTO speed selector switches (MCC-30 ONLY): When in the AUTO position, the associated variable speed pump's speed will be controlled by the Pump Controller. In the MANUAL position the associated variable speed pump's speed is controlled locally by its associated MANUAL SPEED CONTROL knob. (This selector switch and the MANUAL SPEED CONTROL knob are used in conjunction with manual pump operation as described hereinafter)

- PUMP selector switches: The position of the selector switch determines the sequence in which the pumps will start. Table III-OB-MPS-4 shows the starting sequence for the various selector switch positions

Table III-OB-MPS-4 - PUMP START SEQUENCE

PUMP START SEQUENCE							
SWITCH POSITION	FIRST PUMP	SECOND PUMP	THIRD PUMP	FOURTH PUMP	FIFTH PUMP	SIXTH PUMP	SEVENTH PUMP
1	MP-MSP-1	MP-MSP-7	MP-MSP-2	MP-MSP-6	MP-MSP-5	MP-MSP-4	MP-MSP-3
2	MP-MSP-2	MP-MSP-6	MP-MSP-1	MP-MSP-7	MP-MSP-5	MP-MSP-3	MP-MSP-4
3	MP-MSP-3	MP-MSP-4	MP-MSP-5	MP-MSP-1	MP-MSP-2	MP-MSP-7	MP-MSP-6
4	MP-MSP-5	MP-MSP-1	MP-MSP-7	MP-MSP-4	MP-MSP-2	MP-MSP-3	MP-MSP-6
5	MP-MSP-4	MP-MSP-3	MP-MSP-2	MP-MSP-6	MP-MSP-5	MP-MSP-1	MP-MSP-7
6	MP-MSP-2	MP-MSP-4	MP-MSP-7	MP-MSP-5	MP-MSP-3	MP-MSP-6	MP-MSP-1
7	MP-MSP-6	MP-MSP-1	MP-MSP-5	MP-MSP-3	MP-MSP-2	MP-MSP-7	MP-MSP-4
8	MP-MSP-5	MP-MSP-4	MP-MSP-1	MP-MSP-7	MP-MSP-2	MP-MSP-6	MP-MSP-3

(3) START-UP AND SHUT-DOWN PROCEDURES

To start up and shut down the main sewage pumping equipment, use the following procedures:

a. START-UP

- Make sure that the plant air system is operating and open the plant air supply line valves to both Bubbler Tube Liquid Level Measuring Systems located in the Main Pumping Station Wet Well

- Make sure that the effluent water supply system is operating and open the valves required to supply seal water to the main sewage pumps

- Close the circuit breakers on each of the main sewage pump cubicles

- Select the pump starting sequence by turning the selector switch to the desired position (see Table III-OB-MPS-4)

- Place the MANUAL-AUTO speed selector switches for Main Sewage Pumps MP-MSP-1, 6, and 7 in the AUTO position

- Depress the RESET push button and place the MANUAL-OFF-AUTO selector switches on the associated main sewage pump cubicle in the AUTO position

b. NORMAL SHUT-DOWN

- Place the MANUAL-OFF-AUTO selector switch on the associated main sewage pump cubicle in the OFF position

c. EMERGENCY SHUT-DOWN

- Depress the EMERGENCY STOP push button either at the pump or on the associated main sewage pump cubicle

NOTE

If maintenance is to be performed on the main sewage pump, depress the EMERGENCY STOP button at the unit and engage the locking device and open the circuit breaker on the associated main sewage pump cubicle in MCC-30 or ASCC-30A. Follow approved **Lockout/Tagout** procedures (See Chapter VI, Safety).

(4) ALTERNATE OPERATION

a. MANUAL OPERATION OF THE MAIN SEWAGE PUMPS

The main sewage pumps may be operated manually. Under manual operation, the MANUAL-OFF-AUTO selector switch on each main sewage pump cubicle is required to be in the MANUAL position. Each main sewage pump may be started or stopped using the START-STOP-EMERGENCY STOP push buttons either at the unit or on the associated pump cubicle. To adjust the speed of the variable speed main sewage pumps under manual operation, place the MANUAL-AUTO speed selector switch on variable speed main sewage pump cubicle in the MANUAL position, if applicable, and adjust the associated pump speed by turning the MOTOR SPEED CONTROLLER knob. The pump speed is indicated on the tachometer speed indicator.

Under normal operation, it is required that periodic adjustments be made to the number of pumps operating, and their speeds, based on changes in flow rate into the treatment plant to maintain a relatively constant wet well liquid level. Refer to Figures III-OB-MPS-4 to III-OB-MPS-6 for pumping capacities of the main sewage pumps.

b. AUTOMATIC AND MANUAL OPERATION OF THE MAIN SEWAGE PUMPS

The Main Pumping Station Wet Well can be divided into two areas (Area 1 and Area 2, see Figure III-OB-MPS-1) by installing stop logs. The stop logs may be installed between the suction inlet of Main Sewage Pumps MP-MSP-4 and 5 or between Main Sewage Pumps MP-MSP-5 and 6. This would be done in rare emergency conditions only.

When the wet well is divided into Area 1 and Area 2, the pumping equipment must be operated and controlled manually. The selector switches for the pumping equipment serving Area 1 are required to be positioned as follows:

- Place the MANUAL-AUTO speed selector switch for Main Sewage Pumps MP-MSP-1 in the MANUAL position

- Depress the RESET push button and place the MANUAL-OFF-AUTO selector switch in the MANUAL position for Main Sewage Pumps MP-MSP-1, 2, 3 and 4

- Depress the RESET push button and place the MANUAL-OFF-AUTO selector switch in the MANUAL position for Main Sewage Pump MP-MSP-5 ONLY when MP-MSP-5 is assigned to serve wet well Area 1

The selector switches for the pumping equipment serving Area 2 are required to be positioned as follows:

- Place the MANUAL-AUTO speed selector switch for Main Sewage Pumps MP-MSP-6 and 7 in the MANUAL position

- Depress the RESET push button and place the MANUAL-OFF-AUTO selector switch in the MANUAL position for Main Sewage Pumps MP-MSP-6 and 7

- Depress the RESET push button and place the MANUAL-OFF-AUTO selector switch in the MANUAL position for Main Sewage Pump MP-MSP-5 ONLY when MP-MSP-5 is assigned to serve wet well Area 2

When the controls are arranged as described above, each main sewage pump can be started or stopped using the START-STOP-EMERGENCY STOP push buttons either at the unit or on the associated pump cubicle. The speed of variable speed Main Sewage Pumps MP-MSP-1, 3, 4, 6 and 7 can be adjusted from the associated pump cubicle using the MOTOR SPEED CONTROLLER knob. The pump speed is indicated on the tachometer speed indicator.
Periodic adjustments to the number of pumps operating and their speeds must be made, based on changes in flow rate into wet well Area in service to maintain a relatively constant wet well level.

c. MONITORS AND ALARMS

The Main Pumping Station Wet Well liquid level for Areas 1 and 2 are indicated on Cubicle No. 11 of MCC-30.

The annunciator panel on Cubicle No. 11, Main Control Panel, of MCC-30 contains audible and visual indication for wet well Area 1 high water level, wet well Area 1 low water level, wet well low level shut-down, wet well Area 2 high water level, and wet well Area 2 low water level alarms.

CAUTION

The low water level shut-down connects into the automatic level control system only. During manual mode operation, plant operating personnel must carefully avoid drawing the wet well level in Area 1 or 2 below Elevation-3.50 feet, the minimum safe pump suction level.

The annunciator panel on Cubicles Nos. 1, 2, 8, 9, and 10 (control cubicles for MP-MSP-1, 2, 5, 6, and 7 respectively) of MCC-30 and on Units Nos. 1 and 2 (control units for MP-MSP-3 and 4) of ASCC-30A, each contain audible and visual indicator for Lock Out Relay Trip, fail to start and seal water low pressure alarms.

The contacts which are provided to initiate the Lock Out Relay Trip alarm are as follows:

- Motor Overload Relays
- Phase Failure Phase Reversal Relay
- Ground Sensing Relay
- Squirrel -Cage Protective Relay
- Eddy Current Coupling Air Temperature Relay (MP-MSP-1, 6, and 7 only)
- Winding Temperature Relay
- Excessive Vibration Relay - Motor (and Eddy Current Coupling on Units MP-MSP-1, 6, and 7)
- Excessive Vibration Relay - Pump
- Sluice Gate Closed
- Alarms will be relayed to the supervisory control and data acquisition (SCADA) monitoring system in the Process Control Room of the Main Pumping Station.

Each main sewage pump is provided with ON-OFF status indicating lights, an elapsed time meter, and current meters on Main Sewage Pump Control Panel - MCC-30. Each variable speed main sewage pump is provided with a tachometer speed indicator on MCC-30.

Each main sewage pump is provided with suction and discharge pressure gauges, calibrated in feet of water.

D. SCUM TRANSFER PUMPS: MP-STP-1 AND 2

(1) DESCRIPTION

The scum transfer pumps are provided to pump scum (removed from the Main Pumping Station Discharge Channel and the Final Sedimentation Tanks) from the scum sump to Primary Sedimentation Tanks 1, 2, 5 or 6 or to the Floating Biological Solids (FBS) Thickener.

The scum transfer pumps consist of two (2) pumps and Associated Drive units, designated MP-STP-1 and 2, a diagram type Liquid Level Sensing Transmitter, designated OG-3, and level controls on the Dewatering and Scum Pump Control Panel.

Each scum transfer pump is single passage, non-clogging, solids handling, horizontally mounted, screw-centrifugal impeller pump driven by an electric constant speed motor.

Each pump has a rated capacity of 1230 gpm at a rated head of 90 feet when the pump speed is 1750 rpm (see Figure III-OB-MPS-7).

Liquid level Sensing Transmitter OG-3, mounted in the suction piping of the pumps, transmits the scum sump liquid level to the Dewatering and Scum Pump Control Panel.

(2) NORMAL OPERATION

Only one of the two scum transfer pumps is required to pump scum. The second pump is provided as a standby unit.

Each scum transfer pump is provided with START-STOP push buttons with a locking device for the STOP push button and a TEST push button at each unit. Each pump is provided with a HAND-OFF-AUTO selector switch on its associated cubicle in Motor control Center MCC-31. A selector switch (MP-STP-1 or MP-STP-2) is provided on the Dewatering and Scum Pump Control Panel.

Under normal operation, when the HAND-OFF-AUTO selector switch for each pump on Motor Control Center MCC-31 is in the AUTO position and either MP-STP-1 or MP-STP-2 is selected as the operating pump through the selector switch on the Dewatering and Scum Pump Control Panel, the selected pump will start up at a preset high liquid level and will shut down at a preset low liquid level.

A pneumatically operated plug check valve is located in the discharge line of each pump and opens automatically when the pump discharge pressure exceeds a preset value (for a detailed description of the operation of the plug check valves, see Section III-SU-VAL-VALVES).

(3) START-UP AND SHUT-DOWN PROCEDURES

To start up and shut down the scum transfer pumps use the following procedures:

a. START-UP

- Make sure the plant air system is operating and open the valves required to supply air to the pneumatically operated pump discharge plug check valves

- Make sure the effluent water system is operating and open the valves required to supply seal water to the pumps, purge water to the pump discharge pressure switch diaphragm seals, and purge water to the scum sump liquid level sensing transmitter's diaphragm seal (OG-3)

- Open the manually operated valves in the pump suction lines

- Close the circuit breakers for each dewatering pump on Motor Control Center MCC-31

- Depress the START push button at each pump

- Select either MP-STP-1 or MP-STP-2 as the operating pump by setting the selector switch on the Dewatering and Scum Pump Control Panel to the selected pump position

- Place the HAND-OFF-AUTO selector switches on MCC-31 in the AUTO position

b. SHUTDOWN

- Place the HAND-OFF-AUTO selector switch on MCC-31 in the OFF position

NOTE

If maintenance is to be performed on the pump, open the circuit breaker on MCC-31 and engage the locking device on the STOP push button. Follow approved **Lockout/Tagout** procedures (See Chapter VI, Safety).

(4) ALTERNATE OPERATION

The scum transfer pumps may be operated manually as follows:

- Follow all start-up procedures listed hereinbefore except the last

- Instead, place the HAND-OFF-AUTO selector switches on MCC-31 in the HAND position

The selected scum transfer pump will operate continuously

(5) MONITORS AND ALARMS

Scum sump level indication is provided on the Dewatering and Scum Pump Control Panel. High and low level alarm conditions are relayed to the annunciator-panel on MCC-31. Alarms will be relayed to the supervisory control and data acquisition (SCADA) monitoring system in the Process Control Room of the Main Pumping Station.

Operational indicating lights are provided on MCC-31 and on the Dewatering and Scum Pump Control Panel. An elapsed time meter is provided for each pump on MCC-31.

E. DEWATERING PUMP: MP-DP-1

(1) DESCRIPTION

The dewatering pump is provided to completely dewater the portions of the Reactors and Final Sedimentation Tanks which will not dewater completely by gravity into the Main Pumping Station Wet Well. The dewatering pump discharges into the Main Pumping Station Discharge Channel.

The dewatering pump consists of a pump and Associated Drive Unit, designated MP-DP-1, a diaphragm type Liquid Level Sensing Transmitter, designated OG-4, and level controls on the Dewatering and Scum Pump Control Panel.

The dewatering pump is a single-stage, horizontal, non-clogging, end suction, vertical discharge, centrifugal vortex-type solids handling pump. The pump is driven by a side-mounted, horizontal, constant-speed motor through a motion control, variable-speed V-belt drive.

The dewatering pump has a rated capacity of 1,400 gpm at a rated head of 25 feet when the pump speed is 563 rpm (see Figure III-OB-MPS-8).

Liquid Level Sensing Transmitter OG-4, mounted in the suction piping of the pump, transmits the dewatering sump liquid level to the Dewatering and Scum Pump Control Panel.

(2) NORMAL OPERATION

The dewatering pump is provided with START-STOP push buttons with a locking device for the STOP push button and a TEST push button at the unit. The pump is also provided with START-STOP push buttons on the Dewatering and Scum Pump Control Panel.

Under normal operation, when the START push button on the Dewatering and Scum Pump Control Panel is depressed, the dewatering pump will run continuously.

A pneumatically operated plug check valve is located in the discharge line of the pump and opens automatically when pump discharge pressure exceeds a preset value (for a detailed description of the operation of plug check valves, see Section III-SU-VAL -VALVES).

The dewatering pump is provided with a motion control variable-speed V-belt drive to vary the pump speed and thereby the pump discharge capacity and head. Refer to Section 46 of the Division 4H4 Contractor's O & M Manual for manufacturer's literature pertaining to the motion control variable speed V-belt drive. The pump speed is adjusted by turning the crank handle on the motion control motor base.

NOTE

The pump speed CAN BE ADJUSTED while the pump is operating.

To obtain a particular pumping rate, for example 1,400 gpm, refer to Figure III-OB-MPS-8 and note that for 1,400 gpm the total theoretical pump head is 25 feet and that the pump speed for this flow rate should be approximately 563 rpm. After the pump has been started as described below, check the pump speed with a hand-held tachometer and adjust the motion control variable speed V-belt drive until the pump speed is approximately 563 rpm. At this point, the pump discharge pressure gauge should read 25 feet, plus or minus 1 foot.

(3) START-UP AND SHUT-DOWN PROCEDURES

To start up and shut down the dewatering pump, use the following procedures:

a. START-UP

- Make sure the plant air system is operating and open the valves required to supply air to the pneumatically operated pump discharge plug check valve
- Make sure the effluent water system is operating and open the valves required to supply seal water to the pump, purge water to the pump discharge pressure switch diaphragm seal, and purge water to the dewatering sump Liquid Level Sensing Transmitter's diaphragm seal (OG-4)
- Open the manually-operated valve in the pump suction line
- Close the circuit breaker for the dewatering pump on MCC-31 in the Main Pumping Station
- Depress the START push button at the pump
- Open Sluice Gate MP-SG-9 and close Sluice Gate MP-SG-8 as described hereinbefore in the subsection headed "Sluice Gates"
- Depress the START push button on the Dewatering and Scum Pump Control Panel

b. SHUTDOWN

- Depress the STOP push button on the Dewatering and Scum Pump Control Panel

NOTE

If maintenance is to be performed on the pump, open the circuit breaker on MCC-31 and engage the locking device on the STOP push button. Follow approved **Lockout/Tagout** procedures (See Chapter VI, Safety).

(4) MONITORS AND ALARMS

Dewatering sump level indication is provided on the Dewatering and Scum Pump Control Panel. High and low level alarm conditions are relayed to the annunciator panel on MCC-31. Alarms will be relayed to the SCADA System in the Process Control Room of the Main Pumping Station.

Operational indicating lights are provided on MCC-31 and on the Dewatering and Scum Pump Control Panel.

An elapsed time meter is provided for the pump on MCC-31.

F. PROCESS AIR BLOWERS: MP-AB-1, 2, AND 3

(1) DESCRIPTION

The process air blowers are provided to supply air for channel aeration, post-aeration iu the Post-Aeration Chlorination Tanks, and purge air to the HPO Reactors (see section titled "Site Utilities Systems"). The process air blower equipment consists of three (3) blowers and Associated Drive Units, designated MP-AB-1, 2, and 3, inlet air filters and blower controls on the Process Air Blowers Control Panel.

The air blowers are horizontal-shaft, multistage, air cooled, centrifugal compressors driven by constant speed, 400 hp motors. Each process air blower is designed for trouble-free operation over the following ranges of atmospheric conditions:

- Range of inlet air temperature: 32 to 100 degrees F
- Range of barometric pressure: 14.2 to 15.2 psia
- Range of inlet pressure: 13.5 to 14.7 psia
- Range of relative humidity: 0 to 100 percent

Each process air blower has a rated capacity of 8,000 acfm of air at a rated discharge pressure of 8.0 psig when the inlet air temperature is 100 degrees F, the relative humidity is 80 percent and the barometric pressure is 14.7 psia.

The process Air Blowers Control Panel is provided with the following items:

- Alarm Horn
- Annunciator Panel
- Alarm SILENCE, TEST, and RESET push buttons
- Combination Ammeter-Air Flowmeter Relays

- Tachometer Speed Indicator Relays
- RESET, START, and STOP push buttons
- ON-OFF Indicating Lights
- Total Air Flow Indicator

(2) NORMAL OPERATION

The process air blowers are operated and controlled from the Process Air Blowers Control Panel. When a START push button is depressed, the associated blower will run continuously.

Under normal operation, one process air blower is capable of providing sufficient air to the facilities listed below in quantities determined by visual inspection. The second and third blowers are provided as stand-by units. This mode of operation is based on operational experience. Process air may be regulated at the following locations:

- Screen and Grit Building Effluent Channel
- Main Pumping Station Discharge Channel
- Intermediate Pumping Station Discharge Channel
- HPO Reactors 1, 2, 3, 4, 5 and 6
- Final Sedimentation Tanks 1 through 12 Influent Channel
- Final Sedimentation Tanks 13 through 20 Influent Channel
- Post-Aeration & Chlorination Tank No.1, 2 and 3 Aeration Zone
- Mixed Liquor Transfer Channels

(3) START-UP AND SHUT-DOWN PROCEDURES

To start up and shut down the process air blowers use the following procedures:

a. START-UP

- Close the circuit breakers for the process air blowers on Motor Control Center MCC-31
- Depress the RESET push button on MCC-31
- Place the ON-OFF switch at each blower in the ON position
- Place the butterfly valve in the suction line of the associated blower in the CLOSED position
- Place the butterfly valve in the discharge line of the associated blower in the full OPEN position

- Depress the RESET push button for the associated blower on the Process Air Blowers Control Panel

- Depress the START push button for the associated blower on the Process Air Blowers Control Panel

- Immediately begin to slowly open the butterfly valve in the suction line of the associated blower

NOTE

The process air blower will automatically shut down if after 20 seconds from time of start, the air flow is less than 4,000 cfm. The process air blower will also automatically shut down if after 60 seconds from time of start, the butterfly valve in the suction line has not been opened to the preset minimum suction set point.

- Position the suction valve for the blower so that the air flow is at least 4,500 cfm.

- Start up the second process air blower as described above.

- After both process air blowers have been started, position the butterfly valves located in the suction lines so that each unit is providing one-half of the total air flow required as indicated in Table III-OB-MPS-5.

b. SHUT-DOWN

- Depress the STOP push button on the Process Air Blowers Control Panel.

- Close the suction and discharge butterfly valves for the associated blower.

NOTE

If maintenance is to be performed on the unit, open the circuit breaker on Motor Control Center MCC-31 and place the ON-OFF switch at the unit in the OFF position and engage the locking device. Follow approved **Lockout/Tagout** procedures (See Chapter VI, Safety).

(4) ALTERNATE OPERATION

Under normal operation, when a combustible gas concentration equal to 25 percent LEL is detected in any one of the Carbonaceous or Nitrification Stage Reactors in service, air will purge the system until the alarm has been reset. For a complete description of the Air Purge System refer to Section III-OB-OR REACTORS.

(5) MONITORS AND ALARMS

Each blower is provided with suction and discharge pressure gauges. The 36-inch process air main is provided with a pressure gauge.

The annunciator panel on the Process Air Blowers Control Panel contains audible and visual alarm indication for Lockout Relay Trip, bearing high temperature, check valve open and air intake filter dirty for each blower. The contacts which are provided to initiate the Lockout Relay Trip alarm are as follows:

- Motor Overload Relays
- Phase Failure - Phase Reversal
- Ground Sensing Relay
- Winding Temperature Relay
- Ammeter - Air Flowmeter Relays

Four bearing temperature overheat switches are provided at each blower. ON-OFF-LOCKOUT status indicating lights and an elapsed time meter are provided for each blower on Motor Control Center MCC-31.

The Process Air Blowers Control Panel is provided with a Total Air Flowmeter, designated GS-1, a combination ammeter-air flowmeter, a tachometer speed indicator, and ON-OFF status indicating lights for each process air blower.

All alarms will be relayed to the SCADA System in the Process Control Room.

G. PROCESS AIR METER: MPA-1

(1) DESCRIPTION

The process air meter is provided to measure the total air flow from the process air blowers to the various treatment facilities. The process air meter consists of a Venturi Meter, designated MPA-1, a differential pressure flow measuring transmitter, and a total air flow indicator on the Process Air Blowers Control Cabinet, designated GS-1. The venturi meter is a 36-inch, modified, stainless steel, insert type meter having a range of 2,400 to 24,000 cfm.

Total air flow will be relayed to the SCADA System in the Process Control Room.

H. PLANT AIR EQUIPMENT: MP-PAC-1, 2 AND 3

(1) DESCRIPTION

The plant air equipment is provided to antomatically supply high pressure dry compressed air for pneumatically operated equipment and systems and hose connections located throughout the various treatment plant facilities (see Figure III-OB-MPS-9). Plant air equipment is located in both the Main

Pumping Station and Filter Building No. 2. See the chapter headed "Filter Building No. 1 and No. 2 and Junction Chamber No. 6" regarding the plant air equipment located in Filter Building No. 2. See Figure III-SU-UPS-1 through -3 for the general plant air diagram for the plant.

The plant air equipment in the Main Pumping Station consists of 3 complete Packaged Air Compressor Systems, designated MP-PAC-1, 2 and 3, piping and fittings, shutoff valves, hose connections, in-line filters, pressure regulating valves, pressure gauges, various solenoid valves, air line lubricators and moisture traps. Each packaged air compressor system consists of an inlet air filter, an air compressor, an aftercooler, a moisture separator, and an air receiver. There are two air dryers serving the three air compressors.

The air compressors are single-stage, double acting water cooled, oil free, reciprocating piston type compressors driven by constant speed motors through V-belt drives. Two air compressors deliver 157 cfm of air at 100 psig and the other delivers 200 cfm of air at 100 psig..

The aftercoolers are effluent water cooled shell and tube type heat exchangers designed to cool the compressor's discharge air to 100 degrees F.

The air dryers are air cooled Freon refrigerated type heat exchangers designed to cool the air from the air receivers, condense and remove moisture and reheat the cool air.

(2) NORMAL OPERATION

Each packaged air compressor system is provided with a unit mounted control panel and annunciator panel. The control panel at each unit is provided with an AUTO STOP-OFF-CONSTANT SPEED selector switch, an elapsed time meter, a pressure switch and a solenoid valve. The annunciator panel at each unit is provided with audible and visual alarm indication and alarm RESET, SILENCE and TEST push buttons. An ON-OFF switch for each unit is provided on the associated annunciator panel. A base load transfer switch is mounted on the annunciator panel of Packaged Air Compressor MP-PAC-1.

Under normal operation, the ON-OFF switch on each annunciator panel is required to be in the ON position, the base load transfer switch is required to be set in Position 1, 2, or 3 to select Packaged Air Compressor System MP-PAC-1, - 2, or -3, respectively, as the lead compressor and the AUTO START/STOP-OFF-CONSTANT SPEED selector switch is required to be in the CONSTANT SPEED position for the lead packaged air compressor system and in the AUTO START/STOP position for the standby packaged air compressor system. The lead compressor will operate continuously, automatically loading and unloading as required to maintain the plant air system pressure. The standby compressor is normally shut down. If the lead unit fails or for any reason cannot meet the system air requirements, the standby unit will automatically start up.

(3) START-UP AND SHUTDOWN PROCEDURES

To start up and shut down the plant air equipment use the following procedures:

a. START-UP

- Make sure the effluent water system is operating and open the valves required to supply cooling water to the packaged air compressor systems
- Close the circuit breakers on Motor Control Center MCC-31 in the Main Pumping Station
- Close the circuit breakers at the units for each air compressor and air dryer
- Place the ON-OFF switch on the associated compressor annunciator panel in the ON position

NOTE

When the ON-OFF switch on the annunciator panel is in the ON position, the associated air dryer automatically starts up. The air dryer must operate for five minutes to allow the Freon coolant to reach the required operating pressure before proceeding with start-up of the plant air equipment.

- Depress the RESET push button on each compressor annunciator panel
- Place the base load transfer switch in Position 1, 2, or 3 as desired to select Compressor MP-PAC-1, -2, or -3 as the lead compressor
- Place the AUTO START/STOP-OFF-CONSTANT SPEED selector switch on the control panels in the CONSTANT SPEED position for the lead unit and in the AUTO START/STOP position for the standby unit

b. SHUTDOWN

- Shut down the plant air equipment by placing the AUTO START/STOP-OFF-CONSTANT SPEED selector switch on the associated control panel in the OFF position

NOTE

If maintenance is to be performed on the equipment, open the circuit breakers at the associated unit and on Motor Control Center MCC-31 and place the ON-OFF switch on the annunciator panel in the OFF position. Follow approved **Loekout/Tagout** procedures (See Chapter VI, Safety).

(4) MONITORS AND ALARMS

Each packaged air compressor system is provided with pressure indicating gauges, a power ON-OFF status indicating light, a motor operating indicating light and elapsed time meter. Each unit is provided with relays to shut down the unit and initiate audible and visual alarms upon occurrence of any of the following:

- Low cooling water pressure
- High cooling water temperature
- High air temperature
- Low oil pressure

The alarms will be relayed to the SCADA system installed in the Process Control Room.

Each air dryer is provided with a Freon suction pressure gauge, an air temperature IN gauge, an air temperature OUT gauge and a power ON indicating light.

I. PLANT WATER EQUIPMENT

(1) DESCRIPTION

The plant water equipment is provided to supply water for hose hydrants inside of structures, to sample sinks and other locations where effluent water is not suitable and where the city water supply could become contaminated. Plant water is city water which is supplied by the equipment described below after flowing through an air gap.

The plant water equipment consists of a water supply tank, two Plant Water Pumps, designated MP-PWP-1 and 2, and a hydro-pneumatic tank with associated flow, level and pressure switches and controls (See Figure III-OB-MPS-10). The overall plant water diagram is shown on Figures III-SU-UPS-4.

The water supply tank is 4 feet in diameter by 7 feet 6 inches high with a capacity of 610 gallons of water. The tank is provided with automatic liquid level controls and high and low water alarms. A 4-inch city water line supplies water to the tank automatically in response to level changes.

The plant water pumps are vertical, in-line, split-case, centrifugal type pumps driven by 10 hp constant speed motors. Each pump has a rated capacity of 150 gpm at a rated head of 127 feet.

The hydro-pneumatic tank is a 4-foot diameter tank designed and built in accordance with the ASME code for unfired pressure vessels with a working pressure of 125 psi. The tank is provided with automatic liquid level controls, liquid level and air pressure alarms, an air pressure supply line, and air pressure controls.

(2) NORMAL OPERATION

Each plant water pump is provided with an ON-OFF switch with a locking device and a TEST push button at the unit. A HAND-OFF-AUTO selector switch for each pump and a pump selector switch is provided on Motor Control Center MCC-31 in the Main Pumping Station.

Under normal operation, the selected pump will be operated and controlled from the liquid level and air pressure controls on the hydro-pneumatic tank. The second pump is provided as a standby unit.

When the HAND-OFF-AUTO selector switch for the selected pump is in the AUTO position, the pump will start and stop as described below:

- Water in the hydro-pneumatic tank is at high level and pressure is at 60 psig

- As water level in the hydro-pneumatic tank falls below the high level and the pressure drops to 50 psig or lower, the selected pump will start and continue to pump until high water level is reached

- When the high water level is reached, the maximum water level float switch shuts off the pump

- Movement of the float control switch energizes the plant air solenoid valve controls and allows air to pressurize the hydro-pneumatic tank until the air pressure in the tank reaches 60 psig. An air pressure switch shuts off the plant air supply at 60 psig

NOTE

When the HAND-OFF-AUTO selector switch for the selected pump is in the HAND position, the pump will run continuously.

(3) START-UP AND SHUT-DOWN PROCEDURES

To start up and shut down the plant water equipment use the following procedures:
(See Figure III-OB-MPS-10 and III-SU-UPS-4)

a. START-UP

- Open the manually operated 4-inch valve required to supply city water to the supply tank

- Open the manually operated valve required to supply plant air to the hydro-pneumatic tank

- Open the manually operated plant water pump suction valve for the selected pump and associated valves in the discharge piping to permit flow into the system piping and also into the hydro-pneumatic tank

- Select Plant Water Pump MP-PWP-1 or 2 for service by placing the pump selector switch on MCC-31 in the desired position

- Place the ON-OFF switch at the selected pump in the ON position

- Close the pump circuit breaker on Motor Control Center MCC-31 in the Main Pumping Station

- Place the ON-OFF switch on MCC-31 in the ON position

- Depress the RESET push button on MCC-31

- Place the HAND-OFF-AUTO selector switch on MCC-31 in the AUTO position

b. SHUT-DOWN

- Place the HAND-OFF-AUTO selector switch on MCC-31 in the OFF position

NOTE

If maintenance is to be performed on a plant water pump, place the HAND-OFF-AUTO selector switch in the OFF position, open the circuit breaker on MCC-31 and place the unit mounted ON-OFF switch in the OFF position and engage the locking device. Close the manually operated plant water pump suction and discharge valves. Move the pump selector switch to the standby unit position and start up the standby pump as described above. Follow approved **Lockout/Tagout** procedures (See Chapter VI, Safety).

(4) MONITORS AND ALARMS

The supply water tank is provided with a high water level alarm and pump shutdown switch and a low water level alarm.

The hydro-pneumatic tank is provided with the following alarms and/or pump shutdown switches:

- Maximum Water Level Pump Shut Down
- High Water Level Alarm and Pump Shut Down
- High Pressure Alarm (set for 65 psig)
- Low Pressure Alarm (set for 40 psig)

The annunciator panel on MCC-31 contains audible and visual indication of supply tank-low water level, supply tank-high water level, hydro-pneumatic tank-low air pressure, hydro-pneumatic tank-high air pressure, and hydro-pneumatic tank-high water level. All alarms will be relayed to the SCADA System in the Process Control Room.

Motor Control Center MCC-31 is provided with an elapsed time meter and a running indicating light for each pump.

J. STANDBY GENERATOR EQUIPMENT: MP-G-1 AND 2

(1) DESCRIPTION

The standby generator equipment in the Main Pumping Station is provided to supply standby emergency electrical power to the treatment plant in the event that the Tampa Electric Company (TECO) power supply is interrupted. The standby generator equipment consists of two (2) Standby Generator Sets, designated MP-G-1 and 2, including (1) turbine generators, (2) generator control panels, (3) generator battery rack, (2) gas turbine oil system, and (2) lubricating oil system. See Figure III-OB-MPS-12 for the Standby Generator Lubrication Oil Diagram.

For a complete discussion of the standby generator equipment, operation and control, refer to Section titled "Power Generation".

K. STANDBY GENERATOR STARTING AIR SYSTEM: MP-SAC-1 AND 2 AND MP-CSP-1 AND 2

(1) DESCRIPTION

The standby generator starting air system is provided to automatically supply compressed air to the air starter motors of the gas turbine engines when the standby generator equipment is started.

The standby generator starting air system consists of two (2) Air Compressors, designated MP-SAC-1 and 2. Each air compressor is provided with an inlet air filter, an air receiver, and a cooling system. The starting air system also includes piping and fittings, air filters, pressure gauges, various manually and automatically operated valves, low pressure alarms and high cooling water temperature alarm switches. Refer to Section titled "Power Generation" for a complete system description.

L. STANDBY GENERATOR FUEL OIL SYSTEM

(1) DESCRIPTION

The standby generator fuel oil system is provided to automatically supply fuel oil to the fuel oil day tank in the Main Pumping Station.

The fuel oil supply system consists of 2 fuel oil storage tanks, 2 Fuel Oil Pumps, designated MP-FOP-1 and 2, and a fuel oil day tank. The fuel oil supply system also includes piping and fittings, liquid level controls, manual shutoff valves, float type suction piping assembly, filter, strainers and pressure relief valves.

Each fuel oil storage tank is an underground tank with a 12,000 gallon capacity. Each tank is 10 feet 6 inches in diameter by 18 feet 7 inches long. The fuel oil day tank has 250 gallon capacity. Refer to Section titled "Power Generation" for a complete system description.

M. HOISTING EQUIPMENT: MP-OC-1

(1) DESCRIPTION

The hoisting equipment in the Main Pumping Station consists of an 11-ton capacity Overhead Underhung Crane, designated MP-OC-1.

The overhead underhung crane consists of a monorail trolley hoist with an electric motor operated trolley and hoist, a motor operated crane bridge and pendant control station suspended from the monorail trolley.

The bridge and trolley motors are ¾ hp motors, and the hoist motor is a 10 hp motor. Each is a single speed motor. The crane bridge motor is provided with cushioned starting and positive soft cushioned braking systems. The trolley and hoist motors are equipped with multiple disc brakes which engage for positive stopping when the motors are de-energized.

(2) NORMAL OPERATION

The overhead underhung crane is provided with a pendant control station with push buttons which control operation of the crane, hoist and trolley motors.

The pendant control station is provided with FROWARD-REVERSE push buttons to operate the trolley motor and the crane motor and with UP-DOWN push buttons to operate the hoist motor.

N. COMBUSTIBLE GAS DETECTION SYSTEM

(1) DESCRIPTION

The Main Pumping Station Wet Well is provided with a combustible gas detection system which is arranged to transmit continuous indication of combustible gas levels related to the lower explosion limit (LEL) of such gases. The combustible gases found in the Main Pumping Station Wet Well include gasoline vapor and methane.

The combustible gas detection system equipment consists of one combustible gas sensor, designated OG-14, a control and indicating unit and indicator and alarm lights.

The combustible gas sensor is provided with a control and indicating unit mounted. The control and indicating unit is provided with the following items:

- A white pilot light for power indication
- An ON-OFF switch
- A red pilot light for alarm indication
- A blue pilot light for trouble indication
- A momentary contact switch for alarm reset and horn silence
- A meter indicator with 0 to 100 percent LEL combustible gas range, all face mounted

(2) NORMAL OPERATION

The combustible gas sensor continuously monitors the atmosphere in Main Pumping Station Wet Well for the presence of combustible gases. When the combustible gas sensor detects a combustible gas level equal to 25 percent LEL, the following will occur: Exhaust Fan MP-E-1 and Supply Fan MP-S-5 will start up; the alarm horn on the PMTC will sound and the 25 percent LEL alarm light will illuminate. If the combustible gas level increases to 50 percent LEL, the alarm hor will continue and the 50 percent LEL alarm light will illuminate. Refer to Chapter IX Emergencies for procedure to be followed upon occurrence of a combustible gas alarm.

Each alarm point, 25 percent LEL and 50 percent LEL and an instrument failure signal for the combustible gas sensor will be relayed to the SCADA System in the Process Control Room.

O. SEWAGE SAMPLING EQUIPMENT

(1) DESCRIPTION

The sewage sampling equipment consists of a Sample Pump, designated MP-SSP-1, and a dual sample Composite Sampler, designated PG-1, capable of compositing two samples from different locations independently.

The dual sample composite sampler consists of two separate sampling mechanisms, a refrigerated sample storage compartment and controls.

Sewage is supplied to one sampling mechanism from the primary effluent conduit by the sample pump. Sewage is supplied to the second sampling mechanism by gravity flow from the Main Pumping Station Discharge Channel (see Figure III-OB-MPS-11). The composite sampler is arrange to take samples in proportion to sewage flow from a flow signal or at a fixed timer interval.

(2) NORMAL OPERATION

Sampler Station PG-1 is provided with 2 sampler dipper mechanisms and a control panel with an ON-OFF switch, TIME-OFF-FLOW push buttons, 2 timers and a counter (2 to 100 counts) for each dipper mechanism. The sampler station is also provided with a remote reset timer for each dipper mechanism in the Process Monitoring and Terminal Cabinet (PMTC) (see figure III-OB-MPS-11).

Under normal operation, when the ON-OFF switch is in the ON positions and the FLOW push is depressed, each dipper mechanism will automatically collect a flow proportioned composite sample based on the timer and counter settings on the local control panel and on the remote reset timer setting in the PMTC as follows:

- The 0 to 60 minutes remote reset timer in the PMTC is arranged such that a specific timer setting will be equal to a certain volume of sewage. Under normal operation, when the timer setting is set for 7.2 (Primary Effluent Sample, Q Maximum= 100 mgd) or 5.15 (Main Pumping Station Discharge Channel Sample, Q Maximum = 140 mgd), the timer will time out for each 0.5 million gallons of sewage flow

- The 2 to 100 counter is provided to initiate operation of the sampler dipper mechanism each time the counter counts out

- The 2 to 100 counter is arranged to count down one count for each 0.5 millions gallons of sewage flow. Under normal operation, the counter is required to be set at 2 which will provide one flow proportioned sample for each million gallons

- After the counter counts down to zero, the 0 to 15 second timer will start and time the duration of extension of the dipper mechanism into the sewage. After the 0 to 15 second timer times out, the dipper mechanism retracts and pours the sample into the sample storage container

EXAMPLE

Calculations are based on obtaining a sample for each million gallons of flow. Given a minimum counter setting of 2, to obtain a sample for each million gallons of flow the remote reset timer is required to be set to time out after each 0.5 million gallons of flow. The remote reset timer setting (t) is calculated as follows:

$$t = \frac{V}{Q\,max} \times (24\ hrs/day) \times (60\ min/hr)$$

Where: V = the required volume to time out the remote reset timer = 0.5 mg
Qmax = the maximum flow signal from associated instrumentation in mgd (for example, for the primary conduit Q max = 100 mgd)

Therefore, for the remote reset timer setting for Sample PG-1 is as follows:

$$t = \frac{0.5\ mg}{100\ mgd} \times (24) \times (60) = 7.2\ minutes$$

Then, for an actual flow, say 40 mgd (Q) of primary effluent, the time (T) between samples is as follows:

$$T = C \times \frac{Q\,max}{Q} \times t$$

where: C = the counter setting = 2

$$T = 2 \times \frac{100\ mgd}{40\ mgd} \times 7.2 = 36\ minutes$$

Note that Q max = 140 mgd for the Main Pumping Station Discharge Channel.

(3) START-UP AND SHUTDOWN PROCEDURES

To start up and shut down the sewage sampling equipment, use the following procedures:

a. STAR-UP

- Close the circuit breaker from Sample Pump MP-SSP-1 on Motor Control Center MCC-31
- Place the ON-OFF witch at the pump in the ON position
- Open manually operated valves required to supply flow to the sampler stations
- Make sure the plant air system is operating and open the manually operated valves required to supply plant air to the dipper mechanism
- Place the ON-OFF switch on the control panel in the ON position

- Set the counters on the control panel at 2
- Set the 0 to 15 second timers on each local control panel as required to allow sufficient time for the dipper mechanism to fully extend and obtain sample
- Depress the FLOW push button on the control panel

b. SHUTDOWN

- Shut down sample pump MP-SSP-1
- Place the ON-OFF switch in the control panel in the OFF position

(4) ALTERNATE OPERATION

Each dipper mechanism on Sampler Stations PG-1 and 2 can be operated to obtain time proportioned samples by depressing the TIME push button on the local control panel. Under time proportioned operation, each dipper mechanism will operate based on the 0 to 60 minutes timer or o to 99.99 minutes timer/counter settings.

P. SUMP PUMPS: MP-SP-1 and 2

(1) DESCRIPTION

The sump pumping equipment is provided to automatically pump the liquid which flows into the Main Pumping Station sump from floor and equipment drains.

The sump pumping equipment in the Main Pumping Station consists of two Sump Pumps and associated Drive Motors, designated MP-SP-1 and 2, and associated control panel, cover plates and frames and sump level controls.

Each sump pump is a single stage, vertical, nonclogging, screenless, bottom suction, side discharge, centrifugal vortex type solids handling wet pit pump driven by a constant speed motor. The sump pump has a rated eapacity of 150 gpm at a rated head of 25 feet.

The sump pumps are located along the west wall of the Main Pumping Station (see Figure III-OB-MPS-1).

(2) NORMAL OPERATION

Each sump pump is provided with a HAND-OFF-AUTO selector switeh located on its assoeiated sump pump control panel near the unit. Under normal operation, when the HAND-OFF-AUTO selector switch for each sump pump is in the AUTO position, each sump pump will start and stop automatically in response to changes in the sump liquid level.

(3) START-UP AND SHUTDOWN PROCEDURES

To start and shut down the sump pumps, use the following procedures:

- Make sure the effluent water system is operating and open the valves required to supply lubrication to the pump
- Open the manually operated valve in the discharge line of each pump
- Place the HAND-OFF-AUTO selector switch for each pump in the AUTO position
- Close the breaker handle on the associated sump pump control panel for each pump
- Close the circuit breaker on the associated motor control centers for the sump pumps and for the sample sump pumps

(4) ALTERNATE OPERATION

Each sump pump may be operated manually when the HAND-OFF-AUTO selector switch is the HAND position. When the HAND-OFF-AUTO selector switch is in the HAND position, the pump will run continuously.

(5) MONITORS AND ALARMS

Audible and visual alarms are provided for each sump pump at the associated annunciator panel, for low lube water level. An audible and visual alarm is provided for each sample sump pump at its associated annunciator panel for high water level. The alarm will be relayed the SCADA system in the Process Control Room.

Each pump is provided with an operational indicating light on its motor control center and a discharge pressure gauge calibrated in feet of water.

Q. HEATING, VENTILATING AND AIR CONDITIONING EQUIPMENT

(1) DESCRIPTION

a. SUPPLY FANS: MP-S-1,2,3 and 4

The purpose of Supply Fans MP-S-1,2,3 and 4 is to provide 100 percent outside air to the basement of the Main Pumping Station.

The supply fan equipment consists of Supply Fans MP-S-1,2,3 and 4, air motor operated inlet dampers, associated ductwork, manually operated exhaust louvers and two thermostat temperature controls. One thermostat controls Supply Fans MP-S-1 and 2 and is mounted at a convenient operating height above the floor Elevation 11.00 near Column Line 9C. The second thermostat controls Supply Fans MP-S-3 and 4 and is mounted at a convenient operation height above the floor at Elevation 11.00 near Column Line 16C.

The supply fans are in-line type centrifugal fans driven through V-belts by two speed 15 hp motors. Each fan supplies 13,000 cubic feet per minute of outside air to the basement when operating at the fast speed and 6,500 cubic feet per minute when operating at the slow speed.

b. SUPPLY FAN: MP-S-5 AND EXHAUST FAN: MP-E-1

Supply Fan MP-S-5 and Exhaust Fan MP-E-1 are provided to ventilate the Main Pumping Station Wet Well.

The exhaust fan equipment consists of Exhaust Fan MP-E-1, piping and fittings. The exhaust fan is cast-iron radial type fan driven through V-belts by a single 3 hp motor. The fan exhausts 1,600 cubic feet per minute of air from the Main Pumping Station Wet Well.

c. SUPPLY FANS: MP-S-6,7 AND 8

Supply Fans MP-S-6, 7 and 8 are to provide 100 percent outside air the Operating Room in the Main Pumping Station.

The supply fan equipment consists of Supply Fans MP-S-6, 7 and 8, an inlet louver with air motor operated damper, associated ductwork and manually operated exhaust louvers.

The supply fans are in-line type centrifugal fans driven through V-belts by single speed 7½ hp motors. Each fan supplies 12,100 cubic feet per minute of outside air to the Operating Room.

d. ROOF EXHAUST FANS: MP-REF-1 AND 2

Roof Exhaust Fans MP-REF-1 and 2 are provided to exhaust air from the Toilet Room and cooking area of the Lunch Room in the Main Pumping Station.

The fans are centrifugal type fans; Fan MP-REF-1 is driven through a V-belt type drive by a 1/6 hp motor and exhausts 390 cubic feet per minute from the Toilet Room. Fan MP-REF-2 is driven through a V-belt type drive by a 1/12 hp motor and exhaust 180 cubic feet per minute from the Lunch Room.

e. CHILLED WATER SYSTEM: MP-CH-1 AND MP-CHP-1

The chilled water system is provided to automatically supply chilled water the cooling coils of Air Conditioner Units MP-AC-1, 2 and 3.

The chilled water system consists of a Water Chiller Unit, designated MP-CH-1, a Chilled Water Pump, designated MP-CHP-1, a compression tank, associated piping and fittings, temperature gauges and pressure gauges.

The water chiller unit is a refrigerant type heat exchanger which consists of a chiller, a condenser, and a compressor. The chiller and condenser sections are shell and tube type heat exchanger. The compressor is a reciprocating, semi hermetic, unloading type compressor with four-step capacity

control. The water chiller unit is driven by a constant speed motor and is rated at 80 tons cooling capacity.

The chilled water pump is a horizontal end suction, centrifugal type pump. The pump is driven by a constant speed motor and is rated at 195 gpm at 50 feet of head.

f. AIR CONDITION SYSTEM: MAP-AC-1, 2 AND 3; MP-R-1, 2 AND 3; MP-EH-1, 2 AND 3
Three air conditioning systems are provided to automatically control the temperature and humidity in the Electrical Room, Process Control Room, Vestibule, Toilet Room and Lunch Room of the Main Pumping Station. The Process Control Room system in addition has humidity control in the winter.

Air Conditioning System No. 1 controls air to the Electrical Room and consists of an Air conditioner, designated MP-AC-1, a Return Air Fan, designated MP-R-1 and an Electric Heater, designated MP-EH-1. A thermostat control for Air Conditioning System No. 1 is located on the west wall of the Electrical Room between Columns 9 and 10.

Air Conditioning System No. 2 controls air to the Process Control Room, Vestibule and Toilet Room and consists of an Air Conditioner, designated MP-AC-2, a Return Air Fan, designated MP-R-2, an Electric Heater, designated MP-EH-2 and a Humidifier, designated MP-HU-1. A thermostat control for Air Conditioning System No. 2 is located on the west wall of the Process Control Room between Columns 14 and 15.

Air Conditioning System No. 3 controls air to the Lunch Room and consists of an Air Conditioner, designated MP-AC-3, a Return Fan, designated MP-R-3, and Electric Heater, designated MP-EH-3 and a 7-day clock. A thermostat control for Air Conditioning System No. 3 is located on the west wall of the Lunch Room between Columns 18 and 19.
Each air conditioning system is provided with controls and indicators on the temperature control panel (located on the HVAC Mezzanine), a 3-way temperature control valve, air motor operated air dampers, and humidity and temperature sensors.

Each air conditioner consists of filer, cooling coil and fan sections. Each filter section consists of an electric motor operated roll type prefilter, a bag type final filter and a filter control panel. The final media for maximum removal particulate matter. Each fan section is driven by 2-speed motors through V-belt drives. For cooling, Air Conditioner MP-AC-1 is rated at 355,000 Btu/hr., Air Conditioner MP-AC-2 is rated at 322,000 Btu/hr., and Air Conditioner MP-AC-3 is rated at 100,000 Btu/hr.

The return air fans are cabinet type centrifugal fans driven by 2 -speed motors through V-belt drives. Return Air Fan MP-R-1 is rated at 7,870 cubic feet per minute at high speed, Return Air Fan MP-R-2 is rated at 6,535 cubic feet per minute at high speed, and Return Air Fan MP-R-3 is

rated at 1,955 cubic feet per minute at high speed. At slow speed each fan's rated capacity is one-half that of the high speed capacity.

The electric heaters are open coil slip-in type with 2-stage heating coils. Electric Heaters MP-EH-1 and 2 are each rated at 30 kW, and Electric Heater MP-EH-3 is rated at 12 kW.

The humidifier consists of a control cabinet with a single steam cylinder and a steam distributer mounted in the air duct downstream of the fan section of Air Conditioner MP-AC-2. The humidifier is rated at 28.7 pounds of steam per hour.

(2) NORMAL OPERATION

a. SUPPLY FANS: MP-S-1, 2, 3 AND 4

Supply Fans MP-S-1, 2, 3 and 4 are each provided with START-STOP push buttons with a locking device for the STOP button at the unit. Supply Fans MP-S-1 and 2 are each provided with an OFF-AUTO selector switch on MCC-33 and a thermostat control located as described hereinbefore. Supply Fans MP-S-3 and 4 are each provided with an OFF-AUTO selector switch on MCC-34 and a thermostat control located as described hereinbefore.

Under normal operation when each OFF-AUTO selector switch is in the AUTO position, each fan will operate continuously at slow speed. If the temperature in the Main Pumping Station rises above one or both of the thermostat control set points, the associated fans will automatically operate at fast speed until the temperature drops below the set point. In addition, each fan is also provided with an auxiliary contact from the standby generators which will automatically operate the fans at fast speed whenever the standby generator equipment is operation and each fan's OFF-AUTO selector switch is in the AUTO position.

b. SUPPLY FAN: MP-S-5 AND EXHAUST FAN: MP-E-1

Supply Fan MP-S-5 is provided with START-STOP push buttons with a locking device for the STOP position at the unit and a HAND-OFF-AUTO selector switch on Motor Control Center MCC-13. Exhaust Fan MP-E-1 is provided with an ON-OFF switch with a locking device for the OFF position at the unit and START-STOP push buttons on MCC-33.

Under normal operation, when the ON-OFF switch for Exhaust Fan MP-E-1 is in the ON position and the HAND-OFF-AUTO selector switch for the supply fan is in the AUTO position, the fans will automatically start when a combustible gas alarm occurs in the Main Pumping Station Wet Well, as described in the subsection headed "Combustible Gas Detection System".

c. SUPPLY FANS: MP-S-6, 7 AND 8

Each supply fan is provided with an ON-OFF switch with a locking device for the OFF position at the unit and START-STOP push buttons on Motor Control Center MCC-33.

Under normal operation, the fans may be operated continuously or intermittently as required. Each fan is also provided with an auxiliary contact from the standby generation which will automatically operate the fans whenever the standby generator equipment is operating.

d. ROOF EXHAUST FANS: MP-REF-1 AND 2

Roof Exhaust Fan MP-REF-1 is provided with an ON-off switch in the Toilet Room. Roof Exhaust Fan MP-REF-2 is provided with an ON-OFF switch in the cooking area of the Lunch Room.

Under normal operation, the fans may be operated continuously or intermittently, as required.

e. CHILLED WATER SYSTEM: MP-CH-1 AND MP-CHP-1

The chilled water pump is provided with an ON-OFF switch with a locking device for the OFF position at the unit and a HAND-OFF-AUTO selector switch on Motor Control Center MCC-31. The water chiller unit is provided with an ON-OFF switch on the chiller control panel at the unit.

Under normal operation, when the ON-OFF switch for the pump is in the ON position and the HAND-OFF-AUTO selector switch is in the AUTO position, the pump will automatically start when the chiller unit is started by placing the ON-OFF switch for the chiller unit in the ON position. The compressor for the water chiller unit will automatically operate after the flow switch detects flow to the chiller unit. After the compressor motor is operating, one or two refrigerant circuits will operate as required to cool the water to 44 degrees F.

NOTE

The chilled water flow rate through the system is constant regardless of the cooling demand of the air conditioners. The flow is circulated through the chiller unit and to the 3-way temperature control valves at each air conditioner. The 3-way control valves are positioned by the automatic air temperature controls for the air conditioner system, as described later, to pass part, all, or none of the chilled water through the air conditioner cooling coils.

f. AIR CONDITIONING SYSTEM: MP-AC-1, 2 AND 3; MP-EH-1, 2 AND 3; AND MP-HU-1

Air Conditioner MP-AC-1, Return Air Fan MP-R-1 and Electric Heater MP-EH-1 are each provided with an OFF-AUTO selector switch on MCC-33. Air Conditioners MP-AC-2 and 3, Return Air Fans MP-R-2 and 3 and Electric Heaters MP-EH-2 and 3 are each provided with an OFF-AUTO selector switch on MCC-34. Humidifier MP-HU-1 is provided with an OFF-AUTO selector switch on the humidifier control panel at the unit.

Each air conditioner is provided with a SUMMER-WINTER selector switch, a damper minimum position control, a return air relative humidity gauge, a space temperature gauge, a supply air

temperature gauge and a mixed air temperature gauge on the temperature control panel. One outside air temperature gauge is provided on the temperature control panel.

When the controls for each air conditioner system are set up as described hereinafter under "Start-up and Shut-down Procedures", the systems will function as described below.

Air Conditioning System No. 1 controls the temperature and humidity in the Electrical Room. The air conditioner and return air fan operate at fast speed when the SUMMER-WINTER selector switch is in the SUMMER position and at the slow speed in the WINTER position. The damper minimum position control on the temperature control panel is required to be set at 15 to supply 15 percent outside air and 85 percent return air to the Electrical Room. Operation of the heater and air conditioner is similar in the summer and winter seasons except for the fan speeds. Operation of Air Conditioning System No. 1 is as follows:

- When the space temperature is above the thermostat control set point in the Electrical Room and the relative humidity in the return air is below the humidity control set point (located in the temperature control panel - TCP) the 3-way temperature control valve will open and modulate to divert a portion of the chilled water flow through the air conditioning cooling coil as required to satisfy the Electrical Room thermostat control set temperature. When the space temperature is satisfied but the humidity is above the set point, the humidity controller will override the room temperature control and will modulate the 3-way temperature control valve to divert a portion of the chiller water flow through the air conditioning cooling coil as required to satisfy the humidity control set point. The electric heater will also operate to heat the supply air as required to satisfy the Electrical Room thermostat control set temperature.

- When the space temperature is below the set point Electrical Room temperature, the electric heater will operate to heat the supply air to the Electrical Room to satisfy the thermostat control set temperature.

Air Conditioning System No. 2 controls the temperature and humidity in the Process Control Room, Vestibule and Toilet Room. The air conditioner and return air fan operate at fast speed when the SUMMER-WINTER selector switch is in the SUMMER position and at low speed in the WINTER position. Normally, the damper minimum position control on the temperature control panel is set at 15 to supply 15 percent outside air and 85 percent return air to the Process Control Room, Vestibule, and Toilet Room. Operation of the heater and air conditioner is similar in the summer and winter seasons except for the fan speeds. Operation of Air Conditioning System No. 2 is as follows:

- When the space temperature is above the thermostat control set point in the Process Control Room and the relative humidity in the return air is below the humidity control set point (located in the TCP), the 3-way temperature control valve will open and modulate to divert

a portion of the chilled water through the air conditioner cooling coil as required to satisfy the thermostat control set temperature. When the space temperature is satisfied but the humidity is above the set point, the humidity controller will override the room temperature control and will modulate the 3-way temperature control valve to divert a portion of the chilled water flow through the air conditioning cooling coil as required to satisfy the humidity control set point. The electric heater will also operate to heat the supply air to satisfy the thermostat control set temperature.

- When the space temperature is below the set point Process Control Room temperature, the electric heater will operate to heat supply air to the thermostat control set temperature. The humidifier will operate to humidify the supply air as required to satisfy the Process Control Room humidity controller set point.

Air Conditioning System No. 3 controls the temperature and humidity in the Lunch Room. The air conditioner and return air fan operate at fast speed when the SUMMER-WINTER selector switch is in the SUMMER position and at the slow speed in the WINTER position. Normally, the damper minimum position control on the temperature control panel is set at 15 to supply 15 percent outside air and 85 percent return air to the Lunch Room. Air Conditioning System No. 3 operates when contacts of the 7-day clock are closed. The 7-day clock is provided to automatically override the thermostat control and shut down the air conditioning system during the night or at other times when the Lunch Room is not in use. Operation of the heater and air conditioner is similar in the summer and winter seasons except for the fan speeds. When the contacts of the 7-day clock are closed, operation of Air Conditioning System No. 3 is as follows:

- When the space temperature is above the thermostat control set point in the Lunch Room and the relative humidity in the return air is below the humidity control set point (located in the TCP), the 3-way temperature control valve will open and modulate to divert to a portion of the chilled water flow through the air conditioning cooling coil as required to satisfy the Lunch Room thermostat control set temperature. When the space temperature is satisfied but the humidity is above the set point, the humidity controller will override the room temperature control and will modulate the 3-way temperature control valve to divert a portion of the chilled water through the air conditioning cooling coil as required to satisfy the humidity control set point. The electric heater will also operate to heat the supply air as required to satisfy the Lunch Room thermostat control set temperature.

- When the space temperature is below the set point Lunch Room temperature, the electric heater will operate to heat the supply air to the thermostat control set temperature.

(3) START-UP AND SHUT-DOWN PROCEDURES

To start up and shut down the heating, ventilating and air conditioning equipment, use the following procedures:

a. START-UP

1. Supply Fans MP-S-1, 2, 3 and 4
   - Set the desired temperature on the thermostat associated with Supply Fans MP-S-1 and 2 and on the thermostat associated with Supply Fans MP-S-3 and 4
   - Depress the START push button at the units
   - Close the circuit breakers for Supply Fans MP-S-01 and 2 on MCC-33 and for Supply Fans MP-S-3 and 4 on MCC-34
   - Place the associated AUTO-OFF selector switch on MCC-33 or MCC-34 in the AUTO position

2. Supply Fan MP-S-5 and Exhaust Fan MP-E-1
   - Make sure the combustible gas detection system is operating as described in the subsection headed "Combustible Gas Detection System"
   - Place the ON-OFF switch foe Exhaust Fan MP-E-1 in the ON position
   - Depress the START push button for supply Fan MP-S-5 at the unit
   - Close the circuit breakers for the supply and exhaust fans on MCC-33
   - Place the HAND-OFF-AUTO selector switch for the Supply Fan MP-S-5 on MCC-33 in the AUTO position

3. Supply Fans MP-S-6, 7 and 8
   - Place the ON-OFF switches at the units in the ON positions
   - Close the circuit breakers on Motor Control Center MCC-33
   - Depress the START push button MCC-33 or, place the ON-OFF switch on the supply fan auxiliary panel on MCC-33 in the ON position

   NOTE

   When the ON-OFF switch is in the ON position, the fans will be started automatically whenever the standby generators are operating.

4. Roof Exhaust Fans MP-REF-1 and 2
   - Place the ON-OFF switches in the Toilet Room and in the cooking area of the Lunch Room in the ON position

5. Chilled Water SYSTEM: MP-CH-1 and MP-CHP-1
   - Make sure the city water system is operating and open the manually operated valves required to supply city water to the compression tank
   - Make sure the effluent water system is operating and open the manually operated valves required to supply effluent water to the condenser
   - Open the manually operated valves in the chilled water supply and return lines
   - Place the HAND-OFF-AUTO selector switch for the chilled water pump on MCC-31 in the AUTO position
   - Close the circuit breakers for the chilled water pump and for the water chiller unit on Motor Control Center MCC-31
   - Close the circuit breaker at the water chiller unit
   - Place the ON-OFF switches at the chilled water pump and on the chiller control panel in the ON position

6. Air Conditioning System: MP-AC-1, 2 and 3; MP-R-1, 2 and 3; MP-EH-1, 2 and 3 and MP-HU-1
   - Make sure the plant air system is operating and open the valves required to supply air to the temperature control panel
   - Make sure the chilled water system is operating
   - Close the associated circuit breakers on MCC-33 and MCC-34 for the return air fan, air conditioners, electric heaters and the humidifier
   - Set the desired room temperature on the thermostat in the Electrical Room, Process Control Room, and Lunch Room
   - Place the ON-OFF switch at Return Air Fan MP-R-3 in the ON position
   - Place the ON-OFF switches at each filter control panel in the ON position
   - Place the ON -OFF switch at Air Conditioner MP-AC-3 in the ON position
   - Place the SUMMER-WINTER selector switches on the temperature control panel in the appropriate season

- Set each damper minimum position control on the temperature control panel at 15

- Place the associated AUTO-OFF selector switches for the return air fans and air conditioners on MCC-33 and MCC-34 in the AUTO position

- Place the AUTO-OFF selector switch on each heater control panel in the AUTO position

- Place the AUTO-OFF selector switch on each humidity control panel in the AUTO position

b. SHUT-DOWN

1. Supply Fans MP-S-1, 2, 3 and 4
   - Place the associated AUTO-OFF selector switch on MCC-33 or MCC-34 in the OFF position

NOTE

If maintenance is to be performed on the fan, open the associated circuit breaker on MCC-33 or MCC-34 and place the ON-OFF switch at the unit in the OFF position and engage the locking device. Follow approved **Lockout/Tagout** procedures (See Chapter VI, Safety).

2. Supply Fan MP-S-5 and Exhaust MP-E-1
   - Place the HAND-OFF-AUTO selector switch on MCC-33 for Supply Fan MP-S-5 in the OFF position

   - Depress the STOP push button on MCC-33 for Exhaust Fan MP-E-1

NOTE

If maintenance is to be performed on the fans, open the associated circuit breaker on MCC-33 and depress the STOP push button or place the ON-OFF switch at the unit in the OFF position and engage the locking device. Follow approved **Lockout/Tagout** procedures (See Chapter VI, Safety).

3. Supply Fans: MP-S-6, 7 and 8
   - Depress the STOP push buttons on MCC-33

NOTE

If maintenance is to be performed on a fan, open the associated circuit breaker on MCC-33 and place the ON-OFF switch at the unit in the OFF position and engage the locking device. Follow approved **Lockout/Tagout** procedures (See Chapter VI, Safety).

4. Roof Exhaust Fans: MP-REF-1 and 2
   - Place the ON-OFF switch in the Toilet Room or in the cooking area of the Lunch Room in the OFF position

NOTE

If maintenance is to be performed on a fan, open the disconnect switch at the unit.

5. Chilled Water System: MP-CH-1 and MP-CHP-1
   - Place the ON-OFF switch in the chiller control panel in the OFF position
   - Place the HAND-OFF-AUTO selector switch on MCC-31 for the chilled water pump in the OFF position

NOTE

If maintenance is to be performed on the chilled water pump, open the circuit breaker on MCC-31 and place the ON-OFF switch at the chilled water pump in the OFF position and engage the locking device. Follow approved **Lockout/Tagout** procedures (See Chapter VI, Safety).

If maintenance is to be performed on to the chiller unit open the unit mounted circuit breaker.

6. Air Conditioning System: MP-AC-1, 2 and 3; MP-R-1, 2 and 3; MP-EH-1, 2 and 3; and MP-HU-1
   - Place the AUTO-OFF selector switches for the associated return air fan and air conditioner on MCC-33 or MCC-34 in the OFF position

NOTE

If maintenance is to be performed on the equipment, place the AUTO-OFF selector switch in the OFF position and open the associated circuit breaker on MCC-33 or MCC-34. Follow approved **Lockout/Tagout** procedures (See Chapter VI, Safety).

CAUTION

If the outside air temperature drops below freezing, the water in the air conditioner cooling coils may freeze and damage the coils. When freezing temperatures are predicted, shut down the chilled water system and drain the cooling coils.

(4) ALTERNATE OPERATION

a. SUPPLY FAN MP-S-5 AND EXHAUST FAN MP-E-1

Supply Fan MP-S-5 and Exhaust Fan MP-E-1 can be manually operated from the HAND-OFF-AUTO selector switch and the START-STOP push buttons, respectively, on Motor Control Center MCC-33. Under manual operation, when the HAND-OFF-AUTO selector switch is in the HAND position and when the START push button is depressed, the fans operate continuously.

b. CHILLED WATER PUMP: MP-CHP-1

The chilled water pump may be operated manually from the HAND-OFF-AUTO selector switch on Motor Control Center MCC-31. Under manual operation, when the HAND-OFF-AUTO selector switch is in the HAND position, the pump will operate continuously.

(5) MONITORS AND ALARMS

The supply, exhaust and return air fans, chilled water pump and water chiller unit, and air conditioners are provided with status indicating lights on Motor Control Centers MCC-31, MCC-33 and MCC-34. Status indicating lights are provided for the water chiller unit on the chiller control panel and for the electric heaters on each heater control panel. Alarm lights for filter media run out alarm will be relayed to the SCADA System in the Process Control Room. A status indicating light and a current meter are provided for the humidifier on the humidifier control panel.

Supply and return chilled water temperature and pressure gauges are provided in the chilled water circulation line at the water chiller unit, at each air conditioner cooling coil, and at the chilled water pump. Suction and discharge effluent water temperature and pressure gauges are also provided at the condenser for the water chiller unit. An air pressure gauge is provided on the compression tank. Refrigerant suction and discharge pressure gauges and an oil pressure gauge are provided at the water chiller unit.

Alarm and shut-down contacts for the water chiller unit are provided for high and low refrigerant pressure, oil pressure and low chiller discharge temperature. The water chiller unit shut-down alarms will be relayed to the SCADA System in the Process Control Room.

The temperature control panel is provided with a return air relative humidity gauge, a supply air temperature gauge and a mixed air temperature gauge for each air conditioning system. One outside air temperature gauge is also provided on the temperature control panel.

R. POWER DISTRIBUTION SYSTEM

The power distribution system is shown in detail on the contract plans and various shop drawings. Refer to Table III-OB-MPS-1, Main Pumping Station - Facility Equipment Summary, for contract plan and shop drawing numbers which pertain to the power distribution system.

S. SPENT COOLING WATER RETURN PUMPS: MPS-SWP-1, 2

(1) DESCRIPTION

The spent cooling water return (SCWR) pumps are provided to pump the spent cooling water from the SCWR well to the Post Aeration Chlorination Tanks. The largest source of spent water cooling is the oxygen generation facilities.

The SCWR pumps consist of two (2) pumps and associated drive units, designated MP-SWP-1 and 2, a bubbler type Liquid Level Sensing Transmitter, and level controls.
The SCWR pumps are single-stage, axially split case, double suction, side suction and discharge nozzle, horizontal shaft type pumps. Each pump is driven by a side-mounted, electric motor powered by an adjustable frequency drive.

The SCWR pumps are operated and controlled from Motor Control MCC-32-A. Refer to the Division 5H4 Contractor's O & M Manual for detailed drawings.

Each pump has a rated capacity of 3910 gpm at a rated head of 39 feet when the pump speed is 1175 rpm.

The bubbler type liquid level transmitter, installed in the SCWR wet well, transmit the liquid level in the wet well to the Bubbler Control Panel and Master Pump Controller in Motor Control Center MCC-32A.

(2) NORMAL OPERATION

Normally a single SCWR pump will be in operation at a time, the other pump is provided as a standby unit. Each SCWR pump is provided with START-STOP push buttons with a locking device for the STOP push button at each unit. Each pump is provided with a HAND-OFF-AUTO selector switch in Motor Control Center MCC-32A. A PUMP 1-PUMP 2 selector switch is provided on the Master Pump Controller.

Under normal operation, when the HAND-OFF-AUTO selector switch for each pump on Motor Control Center MCC-32A is in the AUTO position and either PUMP 1 or PUMP 2 is selected as the lead operating pump through the selector switch on the Master Pump Controller, the selected pump (MPS-SWP-1 or MPS-SWP-2) will start up at a preset high liquid level and will shut down at a preset low liquid level. In automatic control, the pump control will automatically adjust pump speed to maintain a relatively constant liquid level in the wet well.

In manual operation (when the HAND-OFF-AUTO selector switch for each pump is in the HAND position), the selected SCWR pump will operate continuously independent of the programmable liquid level controller. The speed of each SCWR pumps is increased or decreased manually with the manual speed potentiometers located in MCC-32A. Under normal manual operation, it is required that manual adjustments be made to the pump speed.

(3) START-UP AND SHUT-DOWN PROCEDURES

To start up and shut down the SCWR pumps use the following procedures:

a. START-UP

- Make sure that the plant air system is operating and open the plant air supply line valves to Bubbler Tube Liquid Level Measuring System located in the SCWR Wet Well
- Make sure the effluent water system is operating and open the valves required to supply seal water to the pumps
- Open the manually operated valves in the pump suction lines
- Close the circuit breakers for each SCWR pump on Motor Control Center MCC-32A
- Select either MPS-SWP-1 or MPS-SWP-2 as the operating pump by setting the PUMP 1-PUMP 2 selector switch on the Master Pump Controller to the selected pump position
- Place the HAND-OFF-AUTO selector switches on MCC-32A in the AUTO position

b. SHUTDOWN

- Depress the STOP push button at the units or on MCC-32A.

NOTE

If maintenance is to be performed on the pump, open the circuit breaker on MCC-32A and engage the locking device on the STOP push button. Follow approved **Lockout/Tagout** procedures (See Chapter VI, Safety).

(4) ALTERNATE OPERATION

The SCWR pumps may be operated manually as follows:

- Follow all start-up procedures listed hereinbefore except the last
- Instead, place the HAND-OFF-AUTO selector switches on MCC-32A in the HAND position
- Depress the START push button at each pump or on MCC-32A

- Adjust the associated pump speed by turning the MOTOR SPEED CONTROLLER knob. The pump speed is indicated on the tachometer speed indicator.

(5) MONITORS AND ALARMS

SCWR well level indication is provided on the Control Panel. High and low level alarm conditions are relayed to the annunciator-panel on MCC-32A. Alarms will be relayed to the SCADA System in the Process Control Room of the Main Pumping Station.

Operational indicating lights are provided on MCC-32A and on the Main Control Panel. An elapsed time meter is provided for each pump on MCC-32A.

T. LIQUID ALUM PUMPING EQUIPMENT

(1) DESCRIPTION

The liquid alum pumping equipment is provided to automatically pump the desired dosage rate of liquid alum to the Reactors and/or to Junction Chamber No.3

The liquid alum pumping equipment consists of 4 duplex liquid alum pumping units, designated MP-LA-1, 2, 3 and 4, and controls on the liquid alum pumps control panel and controls provided on the Process Control Console. Each pumping unit is provided with dual pump heads, designated 1A, 1B, 2A, 2B, 3A, 3B, 4A and 4B. Each pump head is a positive displacement, hydraulically actuated, diaphragm type pump with a variable stroke length controller which provides variable rate control of the liquid alum from 0 to 420 gph.

NOTE

This equipment is no longer in operation and therefore has not been included in this manual tables nor drawings.

U. PHOSPHATE MEASURING EQUIPMENT

(1) DESCRIPTION

The phosphate measuring equipment is provided to automatically analyze the primary effluent for total orthophosphate.

The phosphate measuring equipment consists of an electric motor operated sample preconditioning unit and a phosphate analyzer, designated PG-3. Sewage is supplied to the phosphate measuring equipment by gravity flow from the Main Pumping Station Discharge Channel.

The phosphate analyzer is provided with a multichannel metering pump and dual beam spectrophotometer which measures total orthophosphate using acid reversion method of orthophosphate and molybdenum blue reagent. Indication of 0-30 mg/l total orthophosphate is provided on the phosphate analyzer and on the Process Monitoring and Terminal Cabinet and will also be relayed to the SCADA System in the Control Room. High and low phosphate and low reagent alarms are indicated at the unit and will be relayed to the SCADA System.

NOTE

This equipment is no longer in operation and therefore has not been included in this manual tables nor drawings.

III-OB-OR OXYGEN REACTORS (011)

A. GENERAL

The six High Purity Oxygen (HPO) Reactors located east of the Main Pumping Station, are provided with the following equipment and systems:

- **Reactors**
- **Step Feed Equipment**
- **Sluice Gates**
- **Flow Control Gates**
- **Supplemental Nitrification Stage Influent Rate Controller Equipment**
- **Return Sludge Rate Controller Equipment**
- **Reactor's Purge Air Rate Controller Equipment**
- **Reactor's Oxygen Pressure Control Equipment**
- **Reactor's Oxygen Supply Flow Measuring Equipment**
- **Reactor's Oxygen Vent Gas Equipment**
- **Reactor's Combustible Gas and Oxygen Purity Analysis System**
- **Mechanical Aerators**
- **Sampling Equipment**
- **Dissolved Oxygen Monitoring System**
- **Channel Aeration System**
- **Chemical Feeding**
- **Plant Air**
- **Effluent Water**
- **Power Distribution System**

Primary effluent and recycle flows to the Carbonaceous Stage HPO Reactor's from the Main Pumping Station Discharge Channel by gravity through the 8-foot 0-inch wide by 22-foot 9-inch high Reactors Influent Channel. The carbonaceous mixed liquor leaves the Carbonaceous Stage Reactors and flows to the Carbonaceous Stage Final Sedimentation Tanks by gravity through the 8-foot 0-inch wide by 22-foot- 9-inch high Reactors Effluent Channel (see Figure III-OB-OR-1).

Settled carbonaceous stage effluent flows to the Nitrification Stage Reactors from the Intermediate Pumping Station Discharge Channel by gravity through the 8-foot 0-inch wide by 22-foot 9-inch high Reactors Influent Channel. Primary effluent from the Main Pumping Station Discharge Channel may also be added to the Nitrification Stage Reactors Influent flow through the 48-inch diameter Supplemental Nitrification Stage Influent. The nitrification mixed liquor leaves the Nitrification Stage Reactors and flows to the Nitrification Stage Final Sedimentation Tanks through the 8-foot 0-inch wide by 22-foot 9-inch high Reactors Effluent Channel (see Figure III-OB-OR-1).

Refer to Table III-OB-OR-1, Oxygen Reactors - Facility Equipment Summary, for control numbers, manufacturers, equipment capacities, and operation, maintenance, contract plan and shop drawing references. Refer to the Contractor's O&M Manual for Manufacturer's Service Manuals pertaining to the equipment in the reactors.

B. PROCESS CONTROL - ACTIVATED SLUDGE

(1) DESCRIPTION

The activated sludge treatment facilities include six High Purity Oxygen Reactors, four Diffused Air Reactors, twenty Final Sedimentation Tanks and five Return Sludge Pumping Stations. This section includes information pertaining to the HPO Reactors. Refer to Sections III-DA-DAR - Diffused Air Reactors, III-FS-FST- Final Sedimentation Tanks Nos. 1-12 and 13-20, and III-FS-SPS- Sludge Pumping Station Nos. 1-5 for additional information.

The HPO treatment facilities can be arranged to provide two separate complete activated sludge processes. The first activated sludge process is provided to remove carbonaceous BOD and solids and is referred to as the "Carbonaceous Stage Activated Sludge Process." The second activated sludge process is provided to convert ammonia nitrogen to the nitrate nitrogen form and is referred to as the "Nitrification Stage Activated Sludge Process."

Primary effluent and carbonaceous return activated sludge are mixed together in the Carbonaceous Stage Reactors (forming mixed liquor). High purity oxygen is transferred into the mixed liquor to promote biological growth. Effluent from the Carbonaceous Stage Activated Sludge Process and nitrification return activated sludge are mixed together in the Nitrification Stage Reactors (forming mixed liquor). High purity oxygen is transferred into the mixed liquor to promote growth of the nitrifying bacteria. Refer to Chapter II, Section II-PD-AT - Advanced Treatment, for a more detailed discussion.

(2) MEASUREMENTS AND ANALYSES

a. TOTAL SUSPENDED SOLIDS (TSS)

By measuring and comparing the suspended solids concentration in the primary effluent against that of the Final Sedimentation Tanks effluent, an indication of the solids removal efficiency of the activated sludge process may be obtained.

b. 5-DAY BOD (BOD_5)

By measuring and comparing the preliminary treatment effluent BOD_5 against that of the Final Sedimentation Tank effluent, an indication of the BOD_5 removal efficiency of the activated sludge process may be obtained.

c. DISSOLVED OXYGEN

The microorganisms required for the activated sludge processes require oxygen to survive and grow. High purity oxygen is transferred into the MLSS to satisfy this requirement. The dissolved oxygen (DO) should be monitored and maintained at a minimum concentration of about 7 milligrams per liter.

d. SLUDGE BLANKET LEVEL

The sludge blanket level in the Final Sedimentation Tanks provides an indication of the amount of sludge in the tanks. Sludge blanket depth also has an effect on the return sludge concentration. A deep blanket will generally provide a uniform concentration of solids in the retnrn sludge. The

bacteria and other organisms in the sludge are required in the reactors to reduce BOD_5 and therefore, as much sludge as possible (80 percent of the total or more) should be kept in the reactors. This may be accomplished by varying the return sludge rates to maintain a relatively constant sludge blanket level in the Final Sedimentation Tanks. A constant sludge blanket level of 6 inches to 8 inches is recommended.

e. RETURN SLUDGE RATE AND CONCENTRATION

The return sludge rate and concentration are required to measure the quantity of activated sludge entering the reactors. The quantity of return sludge determines in part, various process parameters such as mixed liquor suspended solids (MLSS).

f. WASTE SLUDGE RATE AND CONCENTRATION

The waste sludge rate and concentration measure the major portion of the solids leaving the system. The only other solids leaving are those flowing over the effluent weir. Control of the solids leaving the system is the most practical control of the system biology since it is directly related to the solids retention time (SRT) explained under "Process Control," below. The waste sludge concentration is the same as the return sludge concentration since sludge is wasted from the return sludge pipelines.

g. MIXED LIQUOR SUSPENDED SOLIDS

The mixed liquor suspended solids (MLSS) concentration is a measure of the amount of activated sludge in contact with the wastewater in the reactors. The MLSS concentration is related to the solids produced in the system and the rate of sludge wasting as described below under "Process Control".

h. SETTLED SLUDGE VOLUME

The settled sludge volume test of the mixed liquor are performed for routine monitoring of the biological process. This information is useful in determining the settleability of the sludge.

i. TYPE OF MICROORGANISMS PRESENT

Samples of carbonaceous stage activated sludge should be examined under a microscope periodically to determine the type of microorganisms present. Higher order organisms, such as protozoa and rotifiers are desirable. Filamentous organisms are not desirable and if present will cause the sludge to have poor settling characteristics.

j. pH

The pH of the wastewater is a key factor in the growth of the organisms. Most of the organisms required for BOD reduction and those required for nitrification cannot tolerate pH levels above 9.5 or below 4.0. In general, the pH range of 6.5 to 7.5 is the most desirable for the activated sludge process.

k. TEMPERATURE

The efficiency of the activated sludge process is dependent on the temperature of the wastewater. Lower wastewater temperatures will generally require that higher SRT's be maintained.

(3) PROCESS CONTROL

a. SOLIDS RETENTION TIME (SRT)

Process efficiency requires that the correct types of microorganisms exist in the reactors. The types of microorganisms may be controlled by adjusting the SRT. (The SRT is also referred to as the mean cell residence time.) The SRT is a measure of how long the microorganisms stay in the process, and may be stated as follows:

$$SRT = \frac{Solids\ in\ Reactor\ under\ Aeration\ (lbs)}{Solids\ Produced\ (lbs/day)}$$

The solids under aeration is computed from the MLSS concentration and the volume of the HPO Reactors. The solids produced in the system is typically about 1.0 pounds per pond of TSS influent to the carbonaceous system in Tampa and about 0.68 pounds per pound of the TSS influent to the HPO nitrification system. The quantity of solids produced will increase at lower SRT's. In a stable system, the solids produced in the system must be removed. The solids production is, therefore, the sum of the solids wasted from the system and the solids in the effluent. The equation for SRT may be restated as follows:

$$T = \frac{X_a \times V}{(Q_W \times X_r) + (Q_E \times X_E}$$

Where:

X_a, is the 7-day running average MLSS, in mg/l
V, is the volume of the reactors in service, in mg
Q_w, is the waste sludge flow, in mgd
X_R, is the waste sludge concentration, in mg/l
Q_E, is the effluent or sewage flow, in mgd
X_E, is the effluent suspended solids concentration, in mg/l

In the above equation the operator has direct daily control of the SRT and Q_w. The number of reactors in service can be controlled on a periodic basis. The SRT is selected based on experience. The typical target SRT for carbonaceous service is 0.5 days or less. Higher carbonaceous SRT's may lead to the growth of filamentous organisms.

Typical, target SRT's for nitrification is 8-10 days for complete nitrification throughout the year. A target SRT of 2.5 days is typically used when the reactors are operated in the single-step nitrification mode, as discussed below. Q_w is controlled directly by setting a waste sludge flow rate

and is the major control used to maintain a selected SRT. X_w will be the same as the return sludge concentration.

In general, a higher SRT will mean a higher MLSS concentration. Also, a higher MLSS concentration means a higher solids load on the final sedimentation tanks. The performance of the final sedimentation tanks is better the lower the solids load. There is, therefore, a need to maintain an SRT high enough to allow the biological system to perform but low enough to allow the final sedimentation tanks to work well.

After a target SRT has been established, the principal control strategy for the activated sludge process will be to maintain the target SRT based on a seven-day running average. A seven-day running average is used since biological changes take place slowly. Using the target SRT, the desired sludge wastage rate is computed using the format shown in Table III-OB-OR-2.

TABLE III-OB-OR-2
CITY OF TAMPA FLORIDA
HOWARD F. CURREN ADVANCED WASTEWATER TREATMENT PLANT
SRT AND WASTAGE CALCULATION

MONTH/YEAR _____

DAY A	PLANT INFL. FLOW [MGD] B	SYSTEM EFFL. FLOW [MGD] C	EFFL. SS [MG/L] D	EFFL. SOLIDS QUANT. [LB/DAY] (CxD) 8.34 E	7-DAY AVG. SOLIDS QUANT. [LB/DAY] F	MLSS AVG. [MG/L] G	7-DAY AVG. OF AVG. MLSS [MG/L] H	ACTUAL TOTAL WASTAGE [MGD] J	WAS SS [mg/l] K	7-DAY AVG. OF WAS SS [MG/L] L	WASTE SOLIDS QUANT. (JxK) M	7-DAY AVG. WASTE SOLIDS N	TARGET SRT [DAYS] O	DESIRED WASTAGE RATE SEE NOTE P	SRT 7 [DAYS] SEE NOTE Q	SRT [DAYS] SEE NOTE R
1																
2																
3																
4																
5																
6																
7																
8																
9																
10																
11																
12																
13																
14																
15																
16																
17																
18																
19																
20																
21																
22																
23																
24																
25																
26																
27																
28																
29																
30																
31																

NOTES:

1. DESIRED WASTE RATE = $\{[(V \times G \times 8.34) \div O] - F\} \div (K \times 8.34)$
2. SRT 7: $Q = (V \times K) \div (F + N)$
3. SRT: $R = (V \times G) \div (E + M)$
4. VOLUMES
   V @ 1 REACTOR = 1.27 MG
   V @ 2 REACTORS = 2.54 MG
   V @ 3 REACTORS = 3.81 MG

b. DISSOLVED OXYGEN

The organisms required for the activated sludge process require oxygen to survive and grow. Dissolved oxygen (DO) probes are provided to continuously measure and indicate the DO of the mixed liquor in the last stage of each reactor. The DO level should be maintained at about 7 mg/l.

c. SETTLEABILITY

Sludge from the Nitrification Stage Activated Sludge Process will generally be a poorer settling sludge (high SVI). If the effluent suspended solids is too high, polymer may be added to the mixed liquor ahead of the Final Sedimentation Tanks temporarily to improve solids removal.

d. FILAMENTOUS ORGANISMS

The presence of filamentous organisms usually indicates that the SRT needs to be adjusted downward. However, for short term control of such organisms, chlorine may be added to the return sludge pipeline.

e. SUPPLEMENTAL NITRIFICATION STAGE INFLUENT

When operated as a two-step process, the carbonaceous stage may remove so much of the organic material that there is a need to get a supplemental input of organics to serve as food for the microorganisms in the nitrification stage. The supplemental stage pipeline is often referred to as the "spike line". General practice has been to open this line and allow a small amount of primary effluent to be applied directly to the nitrification stage reactors for several hours per day.

C. REACTORS

(1) DESCRIPTION

The reactors are covered tanks provided to transfer high purity gaseous oxygen into the mixed liquor. This process is intended to remove suspended solids, BOD_5 and nitrogen from the sewage.

Each of the six reactors is 220 feet long by 55 feet wide and has an nominal water depth of 14 feet. The tanks are located adjacent to each other and are of common wall construction. Each reactor is divided into four stages by concrete walls which have ports to allow flow of liquid and gas through each stage. Each reactor is provided with relief valves for pressure and vacuum relief in the first and fourth stage.

The reactors are bordered on the north by an aerated influent channel and on the south by an aerated effluent channel. Flow control gates are provided at various locations in the influent and effluent channels to permit flexibility in selecting the number of reactors in carbonaceous or nitrification stage service (see Figure III-OB-OR-1).

Wastewater enters stage one of the reactors from the influent channel through inlet sluice gates. In Reactors No. 1 and 2, a 54" FRP primary effluent conduit has been installed to allow the bypass of stage one, transporting the flow directly into stage two of the reactors during the step feed mode; however, this would increase oxygen demand in stage two of the reactors, exceeding the capacity of the installed equipment. In the future, the mechanical aerators for stage two of Reactors No.1 and 2 could be replaced

to allow the system to meet the oxygen demands for the step feed mode of operation. Refer to subsection headed "Step Feed Equipment" for detailed information.

Activated sludge from the Final Sedimentation Tanks is returned to the first stage of each reactor and is mixed with the influent wastewater to form mixed liquor.

Each of the four stages of each reactor is provided with a mechanical aerator. The mechanical aerators are provided to transfer high purity gaseous oxygen into the mixed liquor and to keep the solids in suspension. Flow from the reactors is controlled by broad crested weir troughs at the south end of each reactor (Refer to Figures III-OB-OR-1 and 3).

(2) NORMAL OPERATION

The two main modes of operation are the series and parallel modes. In the series modes of operation, the six reactors are in Carbonaceous Stage service. In the parallel mode, the six HPO reactors function in either Carbonaceous, Nitrification or Single-Step Nitrification service as shown in Figure III-OB-OR-2.

The detailed description for various modes of operation is included in Chapter II.

Table III-OB-OR-3 includes excerpts from the Basis of Design (which is presented in its entirety in Chapter II) pertaining to the reactors modes of operation.

TABLE III-OB-OR-3 - OXYGEN REACTORS BASIS FOR DESIGN

PARAMETER	MODE OF OPERATION		
	SERIES	PARALLEL	
	CARB ONLY	2-STEP	1-STEP
GENERAL			
Plant Influent Flow - mgd	96.0	96.0	96.0
Reactor Influent Flow - mgd			
Primary Effluent	96.0	70.0	70.0
Primary Effluent + Recycles	121.0	88.2	88.2
CARBONACEOUS REACTORS			
Return Sludge Flow - mgd (a)	65.3	45.9	49.4
Mixed Liquor Flow - mgd	186.3	134.1	137.6
Number of Reactors			
Total Available	6	3	6
In Operation	4	3	6
Number of Stages per Reactor	4	4	4
Average Water Depth - ft	14.0	14.0	14.0
Size of Each Reactor - ft	55x220	55x220	55x220

PARAMETER	MODE OF OPERATION		
	SERIES	PARALLEL	
	CARB ONLY	2-STEP	1-STEP
Reactor Volume - Mil. Gal.			
Total Available	7.62	3.81	7.62
In Operation	5.08	3.81	7.62
Mixed Liquor Suspended Solids - mg/l	2775	2698	2867
Solids Retention Time (SRT) - days	0.8	0.8	2.5
Displacement Time - hrs	1.0	1.0	2.1
NITRIFICATION REACTORS			
Return Sludge Flow - mgd (a)	NA	30.0	NA
Mixed Liquor Flow - mgd	NA	118.2	NA
Number of Reactors			
Total Available	NA	3	NA
In Operation	NA	3	NA
Number of Stages per Reactor	NA	4	NA
Average Water Depth - ft	NA	14.0	NA
Size of Each Reactor - ft	NA	55x220	NA
Reactor Volume - Mil. Gal.			
Total Available	NA	3.81	NA
In Operation	NA	3.81	NA
Mixed Liquor Suspended Solids - mg/l	NA	2015	NA
Solids Retention Time (SRT) - days	NA	8.0	NA
Displacement Time - hrs	NA	1.0	NA

(a) Based on stated SRT

(3) START-UP AND SHUTDOWN

To start up and shut down a reactor, use the following procedures:

a. START-UP

Select reactor or reactors to be put into operation (see Figure III-OB-OR-2)

Start up the following associated equipment as described elsewhere in this section: mechanical aerators, return sludge rate controller equipment, purge air rate controller equipment, oxygen pressure control equipment, oxygen supply flow measuring equipment, vent gas equipment, and the combustible gas and oxygen purity analysis system.

Open all associated reactor influent sluice gates

b. SHUTDOWN

Close the associated reactor influent sluice gate or gates

Shut down the following associated equipment as described elsewhere in this section: mechanical aerators, return sludge rate controller equipment, vent gas equipment and in addition close that associated oxygen supply valve

(4) DEWATERING PROCEDURES

To dewater a reactor or a portion of the influent and effluent channels, use the following procedures.

a. DEWATERING-REACTORS

Shut down the reactor to be dewatered as described above

Open the associated manually operated Sluice Gates UR-SR-17, 18 19, 20, 21 or 22 and manually operated Sluice Gate UR-SG-26 to the main drain (see Figure III-OB-OR-1)

b. DEWATERING-INFLUENT AND EFFLUENT CHANNELS

Manually operated sluice gates and flow control gates have been provided in the influent and effluent channels. The entire influent or effluent channel may be dewatered or, by operating the flow control gates and associated sluice gates, only a portion of the influent or effluent channel may be dewatered, leaving the remainder in service (see Figure III-OB-OR-1).

D. STEP FEED EQUIPMENT

(1) DESCRIPTION

The step feed equipment provided in Reactors No. 1 and 2 is identical and consists of two 54" FRP Primary Effluent Feed Conduits, two 54" Butterfly Control Valves and Velocity Probe Flow Control.

The step feed equipment is provided to allow the flow of primary effluent directly into Stage 2 of Reactors No. 1 and 2, bypassing the first stage (See Figure III-OB-OR-1). While in the step feed mode, return sludge is the only flow into the first stage of the reactors. This arrangement distributes the BOD load more evenly. As a result, return sludge MLSS and reactor effluent MLSS concentrations can be decreased while still maintaining an average MLSS concentration at proper levels for degradation of primary effluent flowing into the reactor. The lower levels of return sludge MLSS required by the step feed arrangement allows for increased treatment capacity in the existing tankage.

The 54"FRP Primary Effluent Feed Conduits are connected to Sluice Gate UR-SG-6 and 7 for Reactor No.1 and 2, respectively. This connection serves to bypass primary effluent to Stage 2 of the reactors.

A 54" butterfly control valve has been mounted on the discharge of each Primary Effluent Feed Conduit to evenly distribute the flow between the reactors.

NOTE

The step feed equipment is not currently in operation. This equipment may be used after the mechanical aerators for stage two of Reactors No.1

and 2 are replaced to allow the system to meet the oxygen demands for the step feed mode.

(2) NORMAL OPERATION

Under normal operation, control of the 54" butterfly control valves to maintain equal flow of primary effluent to Reactors No. 1 and 2 is automatic. The Master Valve Position Controller valve position set point is manually selected. To achieve proper flow splitting with minimum head loss, the position of the valve which happens to be most open is controlled by the Master Valve Position Controller which sends its output signal to the flow indicating controller as a set point. The Master Valve Position Controller will increase its output signal if the most open valve is too far closed and decrease its output if the valve is too open in relation to its manually selected set point.

If there is an excess of incoming flow, the Flow Indicating Controllers will sense it and try to throttle to maintain their setting. The lower valve position signal of the most open valve will upset the Master Controller set point. The output signal of the Master Controller will increase, thus raising the set points to both control valves until the open position of the most open valve satisfies the Master Valve Position Controller.

If there is decrease in system flow, the Flow Indicating Controller will open to attempt to maintain set point flow. The increased valve position signal will upset the Master Valve Position Controller because it will be greater than the Master Valve Position Controller set point. The output of the Master Valve Position Controller will then decrease, thus lowering the set point at each Flow Indicating Controller until the proper open position of the most open valve satisfies the Master Valve Position Controller.

As the most open valve reaches the set point of the Master Valve Position Controller, the system stabilizes and offers the least possible resistance to the system flow.

(3) START-UP AND SHUTDOWN PROCEDURES

To start-up and shut down the step feed equipment in Reactors No. 1 and 2, use the following procedures:

a. START-UP

Make sure power is supplied to all step feed equipment components

Place both 54" butterfly valve LOCAL-OFF-REMOTE selector switch located at the valve operator in the REMOTE position

Put each Flow Indicating Controller AUTO-MAN push buttons and LOCAL-REMOTE set point selector push buttons, located on the Process Monitoring and Terminal Cabinet (PMTC), in the MANUAL output and LOCAL set point modes, respectively

Manually adjust the valve position on each Flow Indicating Controller, watching the flow indicating scale, to achieve equal flow into each reactor

Put the Master Valve Position Controller AUTO-MAN push button and LOCAL-REMOTE set point selector push button, located on the PMTC, in the AUTOMATIC output and LOCAL set point modes, respectively

On the PMTC, adjust the most open valve position set point to equal the most open valve position indicated on the Master Valve Position Controller scale

NOTE

The most open valve position set point will have to be readjusted if the average flow rate of primary effluent flowing to the reactors becomes greater than or less than the average flow rate at the time of start-up. For lower average flows, decrease the set point. For higher average flows, increase the set point.

Put each Flow Indicating Controller in the AUTOMATIC output and REMOTE set point modes

b. NORMAL SHUTDOWN

To stop step feed operation in a reactor, manually close associated Sluice Gate UR-SG-6 or 7 at the inlet of the 54" FRP Primary Effluent Feed Conduit

Place the Flow Indicating Controller associated with the reactor to be shut down in the MANUAL output and LOCAL set point mode

Manually adjust the valve position on the Flow Indicating Controller to 0%

NOTE

Open the circuit breaker at MCC-31 and place the LOCAL-OFF-REMOTE selector switch located at the valve operator in the OFF position and engage the locking device if maintenance is to be performed on the equipment. Follow approved **Lookout/Tagout** procedures (See Chapter VI, Safety).

(4) ALTERNATE OPERATION (MANUAL OPERATION)

The 54" butterfly valves may be manually operated from the PMTC - Top Box or at the valve. For manual operation from the PMTC - Top Box, the Master Valve Position Controller should be in the AUTOMATIC output, LOCAL set mode. Valve position may then be controlled at the associated Flow Indicating Controller by selecting the MANUAL output, LOCAL set point mode and adjusting the Flow Indicating Controller valve position set point.

To operate the valve locally, the valve selector switch must be in the LOCAL position. OPEN-STOP-CLOSE push buttons located on the valve operator are the used to vary valve position.

(5) MONITORS AND ALARMS

Each valve operator is provided with valve position indicating lights. Flow Indicating Transmitters are equipped with flow velocity meters and LED display that indicate percentage of out flow.

The Master Valve Position Controller is provided with a most open valve position scale indicating "percent open", a most open valve position set point indicator, and a scale indicating output signal strength.

Each Flow Indicating Controller is equipped with a flow/valve position percent open scale, a local valve position set point indicator, and a scale indicating output signal strength.

Each 54" butterfly valve operator is provided with a valve position indicator that mechanically indicates fully open, fully closed and intermediate valve position.

E. SLUICE GATES: UR-SG-2, 3, 4, 5, 6, 7, 8, 9, 10, 11, 12, 13, 15, 16, 17, 18, 19, 20, 21, 22, 23, 24, 25, 26, AND 27

(1) DESCRIPTION

Sluice gates are provided to control sewage flow into and through the reactors (see Figure III-OB-OR-1). Table III-OB-OR-4 indicates the contract plan designation number, size, type operator and function of the sluice gates.

TABLE III-OB-OR-4 - FUNCTION OF SLUICE GATES

GATE CONTRACT PLAN DESIGNATION	SIZE (INCHES)	OPERATOR TYPE	FUNCTION
UR-SG-2	60 X 96	Modulating Electric Motor	See the subsection headed "Supplemental Nitrification Stage Influent Rate Controller Equipment"
UR-SG-3	48	Electric Motor	Permits flow into the Supplemental Nitrification Influent (in open position)
UR-SG-4	48	Modulating Electric Motor	See the subsection headed "Supplemental Nitrification Stage Influent Rate Controller Equipment"
UR-SG-5	48 X 36	Electric Motor	Permits flow into Reactor No. 1 (in open position)
UR-SG-6	48 X 36	Electric Motor	Permits flow into the 54" FRP Primary Effluent Feed Conduit for Reactor No. 1 (in open position)
UR-SG-7	48 X 36	Electric Motor	Permits flow into the 54" FRP Primary Effluent Feed Conduit for Reactor No. 2 (in open position)

GATE CONTRACT PLAN DESIGNATION	SIZE (INCHES)	OPERATOR TYPE	FUNCTION
UR-SG-8	48 X 36	Electric Motor	Permits flow into Reactor No. 2 (in open position)
UR-SG-9 and 10	48 X 36	Electric Motor	Permits flow into Reactor No. 3 (in open position)
UR-SG-11	48 X 36	Electric Motor	Permits flow into Reactor No. 4 (in open position)
UR-SG-12	48 X 36	Electric Motor	Permits flow into Reactor No.5 (in open position)
UR-SG-13	48 X 36	Electric Motor	Permits flow into Reactor No. 6 (in open position)
UR-SG-15 and 16	12	Handwheel	Permits dewatering of the influent channel (in open position)
UR-SG-17	12	Handwheel	Permits dewatering of the Reactor No. 1 (in open position)
UR-SG-18	12	Handwheel	Permits dewatering of the Reactor No. 2 (in open position)
UR-SG-19	12	Handwheel	Permits dewatering of the Reactor No. 3 (in open position)
UR-SG-20	12	Handwheel	Permits dewatering of the Reactor No. 4 (in open position)
UR-SG-21	12	Handwheel	Permits dewatering of the Reactor No. 5 (in open position)
UR-SG-22	12	Handwheel	Permits dewatering of the Reactor No. 6 (in open position)
UR-SG-23, 24 and 25		Handwheel	Permits dewatering of effluent channel (in open position)
UR-SG-26	12	Handwheel	Permits flow from the Reactor Dewatering Manhole to the main drain (in open position)
UR-SG-27	12	Handwheel	Permits scum to flow to the scum sump in the Main Pumping Station (in open position)

(2) NORMAL OPERATION

a. SLUICE GATES UR-SG-2 AND 4

Sluice Gates UR-SG-2 and 4 are normally operated together in conjunction with Rate Controller MRC-5 (refer to subsection headed "Supplemental Nitrification Stage Rate Controller Equipment").

b. SLUICE GATES UR-GS-3, 5, 6, 7, 8, 9, 10, 11, 12 AND 13

Sluice Gate UR-SG-3 is located in the Main Pumping Station Discharge Channel and permits preliminary treated sewage flow to the Supplemental Nitrification Stage Influent and is normally open. Sluice Gates UR-SG-5, 6, 7, 8, 9, 10, 11, 12, and 13 are located in the Reactors Influent Channel and are intended to the completely open or completely closed. The sludge gates are

motor-operated and are provided with OPEN-CLOSE-STOP push buttons at each unit for local operation.

c. SLUICE GATES UR-SG-15, 16, 17, 18, 19, 20, 21, 22, 23, 24, 25, AND 26
Sluice Gates UR-SG-15 and 16 are located in the influent channel and are provided to dewater the influent channel. Sluice Gates UR-SG-17, 18, 19, 20 ,21, and 22 are located in Reactors Nos. 1, 2, 3, 4, 5 and 6, respectively, and are provided to dewater their respective reactor. Sluice Gates UR-SG-23, 24 and 25 are located in the effluent channel and are provided to dewater the effluent channel. Sluice Gate UR-SG-26 is located in the Reactors Dewatering Manhole and is provided to permit flow from the manhole to the main drain. Each sluice gate is manually operated by means of a handwheel. Turning the handwheel in the counterclockwise direction opens the gate.

d. SLUICE GATE UG-SG-27
Sluice Gate UR-SG-27 is a manually operated down opening gate. The gate is located in the northwest corner of the influent channel and is provided to remove scum form the channel. The sluice gate is manually operated by means of a handwheel. Turning the handwheel in the counterclockwise direction opens the gate.

(3) START-UP AND SHUTDOWN PROCEDURES
The following procedures apply only to sluice gates with motor operators:

a. START-UP
Close the circuit breakers on Motor Control Center MCC-12
Push the OPEN or CLOSE push buttons

NOTE
Limit switches are provided to completely de-energize the motor operators when the gate arrives at the completely OPEN or CLOSED position.

b. SHUTDOWN
Push the STOP push button

NOTE
If maintenance is to be performed on the unit, open the unit mounted circuit breaker and engage the locking device on the STOP push button. Follow approved **Lookout/Tagout** procedures (See Chapter VI, Safety).

(4) ALTERNATE OPERATION
Each motor operator is provided with a handwheel for manual operation as follows:

- Depress to motor operator declutching lever
- Turn the handwheel counterclockwise to open and clockwise to close the gate

NOTE

Energizing the motor operator automatically disengages the declutching lever and returns the gate to motor operation.

(5) MONITORS

Torque switches are provided to de-energies the motor operator if the gate movement becomes obstructed. Refer to the Contractor's O&M Manual for manufacturer's literature that describes the setting and operation of the torque switches.

Position indicating lights are provided at each motor operator. One light is provided to indicate the completely OPEN and one light is provided to indicate the completely CLOSED position. When both indicating lights are on, the gate is in an INTERMEDIATE position.

F. FLOW CONTROL GATES: UR-FCG-1, 2, 3 AND 4

(1) DESCRIPTION

The flow control gates have been installed in the influent and effluent channels of the HPO Reactors to facilitate changing the flow patterns (modes of operation) within the reactors (see Figure III-OB-OR-1). The flow control equipment consists of the following:

- Two 7-foot 6-1/4-inch wide by 16-foot 6-inch high self-contained motor operated slide gates (UR-FCG-1 and 2) located in the reactors' influent channel
- Two 7-foot 6-1/4-inch wide by 16-foot 6-inch high self-contained motor operated slide gates (UR-FCG-3 and 4) located in the reactors' effluent channel

(2) NORMAL OPERATION

Normal operation of the flow control gates is OPEN, CLOSE, and STOP from the operator disconnect breaker and control station.

(3) START-UP AND SHUTDOWN PROCEDURES

a. Start-up

Close circuit breaker for the selected flow control gate at the associated Motor Control Center (MCC-33 or MCC-34)

Depress the OPEN or CLOSE push button at the operator disconnect breaker and control station

b. Shutdown

Depress the STOP push button at the operator disconnect breaker and control station

(4) MONITORS AND ALARMS

The flow control slide gates UR-FCG-1 through 4 are each provided with a red OPEN indicating light and a green CLOSED indicating light mounted with the local disconnect breaker and control station.

G. SUPPLEMENTAL NITRIFICATION STAGE INFLUENT RATE CONTROLLER EQUIPMENT: MRC-5

(1) DESCRIPTION

The supplemental nitrification stage influent rate controller equipment is provided to automatically control the flow of primary effluent from the Main Pumping Station Discharge Channel to the Nitrification Stage Reactors.

The supplemental nitrification stage influent rate controller equipment consists of a venturi meter, designated MRC-5, Sluice Gates UR-SG-2 and 4, an indicating flow transmitter (at the meter) and instrumentation on the Process Monitoring and Terminal Cabinet (PMTC). These instruments include an indicator recorder, designated G-9, a Proportional-Reset Flow Controller, designated G-10, a manual Set Point Station, designated G-11, a manual Set Point Station, designated G12 and a Ratio Station, designated G-13 (see Figure III-OB-OR-6).

Meter MRC-5 is a modified type, cast iron, 48-inch venturi tube with a flow range of 3 to 30 mgd.

Sluice Gate UR-SG-2 is a 60 x 96-inch gate and is located at the west end of the reactors influent channel. Sluice Gate UR-SG-4 is a 48-inch gate and is located downstream of Meter MRC-5 in the supplemental nitrification stage influent.

Each gate is equipped with a modulating electric motor operator, with a two position selector switch marked AUTO-MANUAL, OPEN-CLOSE push buttons and a handwheel for manual operation. The selector switch is provided with a keyed locking device. The locking device will not allow the selector switch to be moved without insertion of a key. When the switch is in the AUTO position, the motor operator is operated from the PMTC. When the switch is in the MANUAL position, the motor operator is operable by either the OPEN-CLOSE push buttons or the handwheel.

(2) NORMAL OPERATION

The rate controller equipment is arranged to permit supplemental nitrification stage influent flow to be paced in proportion to total plant flow up to a maximum flow rate.

Under normal operation, when the selector switches on Sluice Gates UR-SG-2 and 4 are each in the AUTO position, the CLOSE-AUTO-MANUAL selector switch on G-11 is in the AUTO position, the AUTO button on G-10 is depressed and the LOCAL-REMOTE selector switch on G-10 is in the REMOTE position, Sluice Gates UR-SG-2 and 4 will modulate, in opposite directions, to maintain the required head in the 48"Nitrification Stage Supplemental Influent to bypass (to the nitrification stage reactors) the portion of the total plant influent set on Ratio Station G-13 up to the maximum rate set on Set Point Station G-12.

For example:

If Ratio Station G-13 is set for 15 percent and Set Point Station G-12 is set for 9.0 mgd, the rate controller will bypass (to the Nitrification Stage Reactors) 15 percent of all sewage flow rates up to 60 mgd. For flow rates above 60 mgd, say 61 mgd, 15 percent is equal to 9.15 mgd which is greater than the maximum rate set on Set Point Station G-12, therefore, the bypass rate will be limited to 9.0 mgd.

(3) START-UP AND SHUTDOWN PROCEDURES

To start up and shut down the rate controller equipment use the following procedures:

a. START-UP

Close the circuit breaker on MCC-32 for Sluice Gate UR-SG-2 and 4

Close the individual circuit breakers for Sluice Gates UR-SG-2 and 4 in the Outdoor Circuit Breaker Enclosures which are mounted near the gate

Place the AUTO-MANUAL selector switches on the sluice gate motor operators in the AUTO position

Proceed to the Process Control Monitoring and Terminal Cabinet in the Main Pumping Station: On Controller G-10 depress the AUTO push button and place the LOCAL-REMOTE selector switch in the REMOTE position

On Station G-11 place the ON-OFF and CLOSE-AUTO-MANUAL selector switches in the ON and AUTO positions, respectively

On Station G-12 set the maximum desired flow rate (9.0 mgd is a suggested initial set point)

On Ratio Station G-13 place the ON-OFF power switch in the ON position and set the ration set point at the desired valve (0.15 is a suggested initial set point)

b. SHUTDOWN

On Controller G-10 place the LOCAL-REMOTE selector switch in the LOCAL position and disengage the AUTO push by depressing either the LOWER or RAISE push button

Depress the MANUAL push button on Controller G-10

NOTE

When the MANUAL push button is depressed the deviation meter becomes a sluice gate position indicator. The sluice gate is completely closed at -50 percent and completely open at +50 percent.

Depress the LOWER push button and maintain contact until the sluice gate is completely closed

NOTE

When Sluice Gate UR-SG-4 is completely closed, UR-SG-2 is completely open.

If maintenance is to be performed, insert the key into the sluice gate motor operator and move the AUTO-MANUAL selector switch to the MANUAL position, make sure the sluice gate is closed and open the circuit breaker in the outdoor circuit breaker enclosure mounted near the gate.

(4) ALTERNATE OPERATION

a. CONSTANT FLOW OPERATION

Under this mode of operation, when the selector switches on Sluice Gates UR-SG-2 and 4 are each in the AUTO position, the CLOSE-AUTO-MANUAL selector switch on G-11 is in the AUTO position and the AUTO button on G-10 is depressed, Sluice Gates UR-SG-2 and 4 will modulate, in opposite directions, to maintain the constant flow rate set on Controller G-10.

b. MANUAL OPERATION FROM THE PMTC

The position of Sluice Gate UR-SG-2 can be manually adjusted from Station G-11 on the Process Monitoring and Terminal Cabinet (PMTC) and the position of Sluice Gate UR-SG-4 can be manually adjusted from Controller G-10 on the PMTC.

Station G-11 is provided with a CLOSE-AUTO-MANUAL selector switch and a MANUAL CONTROL KNOB. To manually adjust the position of Sluice Gate UR-SG-2 set the selector switch in the MANUAL position and rotate the MANUAL CONTROL KNOB to 100 percent to completely open the gate, to 0 percent to completely close the gate.

Controller G-10 is provided with MANUAL-AUTO push buttons and LOWER-RAISE momentary contact buttons. To manually adjust the position of Sluice Gate UR-SG-4, push either of the momentary contact buttons to release the AUTO button and depress the MANUAL button. Depressing the MANUAL button converts the deviation meter to a sluice gate position indicator. Pushing the LOWER or RAISE momentary contact button will then cause the gate to move in the associated direction until the gate is either completely closed, completely open or the momentary contact button is released. The gate is completely closed at -50 percent and completely open at ± 50 percent.

c. MANUAL OPERATION FROM MOTOR OPERATORS

To manually adjust the position of Sluice Gates UR-SG-2 and 4 from the associated motor operator, insert the key into the motor operator and place the AUTO-MANUAL selector switch in the MANUAL position and depress the OPEN or CLOSE push button.

d. HANDWHEEL OPERATION

Each motor operator is provided with a handwheel for manual operation as follows:
Depress motor operator declutching level
Turn handwheel counterclockwise to open or clockwise to close gate

NOTE

Energizing the motor operator automatically disengages the declutching lever and returns gate to motor operation.

(5) MONITORS

Torque switches are provided to de-energize the sluice gate motor operators if the gate movement becomes obstructed. Refer to the Contractor's O&M Manual for manufacturer's literature that describes the setting and operation of torque switches

Each sluice gate is provided with a gate position indication on its motor operator.

H. RETURN SLUDGE RATE CONTROLLER EQUIPMENT: MRC-6, 7, 8, 9, 10, 11 AND 12

(1) DESCRIPTION

The return sludge rate controller equipment is provided to automatically distribute the return sludge flow to the reactors equally or in adjustable proportions.

The return sludge rate controller equipment consists of seven venturi meters with integral motor operated Butterfly Valves, designated MRC-6, 7, 8, 9, 10, 11 and 12 and associated local flow transmitters and local valve controllers and instrumentation on the Process Monitoring and Terminal Cabinet (PMTC). Instruments on the PMTC include two Master Valve Position Indicating Controllers, designated G-28 and 29 serving the carbonaceous and nitrification stages, respectively, and seven Control Station, designated G-37, 38, 39, 40, 41 and 43 serving Rate Controllers MRC-6, 7, 8, 9, 10, 11 and 12, respectively.

Each meter is a modified type, cast-iron, 30-inch venturi tube with a integral modulating electric motor operated butterfly valve. Each rate controller has a flow range of 2.5 to 25 mgd.

(2) NORMAL OPERATION

The rate controller equipment is arranged to distribute the carbonaceous and nitrification stage return sludge flow to the associated reactors. The flow rate of the return sludge is controlled by varying the speed of the return sludge pumps as described in the Section III-FS-SPS, headed Sludge Pumping Stations Nos. 1, 2, 3, 4 and 5.

Under normal operation, the rate controller equipment is manually operated from Control Station G-37, 38, 39, 40, 42 and 43 on the Process Monitoring and Terminal Cabinet (PMTC). Each Control Station is provided with a set point dial calibrated from 0 to 25 mgd. When the CLOSE-AUTO-MANUAL

selector switch on each control station is place in the MANUAL position, each rate controller will maintain the flow rate set on its associated control station.

CAUTION

If the total carbonaceous or nitrification stage return sludge pumping rate (as indicated on Indicator Recorder G-44 or G-45) the less than the total combined rate set on the carbonaceous or nitrification stage control stations the associated rate controllers may begin to hunt and cause sporadic flow distribution to occur.

(3) AUTOMATIC "3-3" OPERATION (SEE FIGURE III-OB-OR-2)

When the treatment plant is operating in the parallel mode and the HPO system is in two-step operation, Reactors Nos. 1 and 2 will be in carbonaceous stage service and Reactors Nos. 4, 5 and 6 will be in nitrification stage service. Reactor No. 3, when required to operate, may be in carbonaceous stage service or in nitrification stage service.

When the CLOSE-AUTO-MANUAL selector switches on Control Stations G-37, 38 and 39 are in the AUTO position and the ratio knobs on each control station is set at 1.0, the motor operated butterfly valves in Rate Controller MRC-6, 7 and 8 will modulate to equally divide the total carbonaceous stage return sludge to Reactors Nos. 1, 2 and 3. The motor operated butterfly valves modulate in response to the ratio knob setting on Control Stations G-37, 38 and 39 and in response to a signal from Master Valve Position Indicating Controller G-28 (see Figure III-OB-OR-4).

NOTE

An initial setting of 60 percent is recommended for Master Valve Position Indicating Controller G-28. The set point may be adjusted as required to maintain stale operation.

When the CLOSE-AUTO-MANUAL selector switches on Control Stations G-41, 42 and 43 are in the AUTO position and the switch on Control Station G-40 is in the CLOSE position and the ratio knobs on Control Stations G-41, 42 and 43 are each set at 1.0, the motor operated butterfly valves in Rate Controller MRC-10, 11 and 12 will modulate to equally divide the total nitrification stage return sludge to Reactors Nos. 4, 5 and 6. The motor operated butterfly valves modulate in response to the ratio knob setting on Control Station G-41, 42 and 43 and in response to a signal from Master Valve Position Indicating Controller G-29 (see Figure III-OB-OR-4).

NOTE

An initial setting of 60 percent is recommended for Master Valve Position Indicating Controller G-28.

The set point may be adjusted as required to maintain stable operation.

(4) ALTERNATE "3-3" OPERATION (UNEQUAL RETURN SLUDGE DISTRIBUTION)

Control Stations G-37, 38, 39, 40, 41, 42, and 43 are provided with ratio knobs which can be set to distribute the return sludge flow to the reactors in unequal proportions. When the CLOSE-AUTO-MANUAL selector switches on the control stations are set as described hereinbefore under "3-3" Operation the flow distribution of return sludge to the Carbonaceous or Nitrification Stage Reactors may be varied by adjusting the ratio station settings as shown on Tables III-OB-OR-5 and 6. Under this mode of operation, the ratio knob setting for one reactor is changed and the ratio knob settings for the remaining Carbonaceous or Nitrification Stage Reactors remain set at 1.0. Tables III-OB-OR-5 and 6 show only those ratio settings which will produce flows within the flow range of the rate controllers.

TABLE III-OB-OR-5 - CARBONACEOUS REACTORS NOS. 1, 2, AND 3

RATIO STATION SETTING	MAXIMUM TOTAL RETURN SLUDGE FLOW	ADJUSTED RATIO RATE CONTROLLER FLOW		1.0 RATIO RATE CONTROLLER FLOW	
		PERCENT OF TOTAL	MAXIMUM RATE MGD	PERCENT OF TOTAL	MAXIMUM RATE MGD
0.2	45	9.1	4.1	45.5	20.5
0.3	45	13.0	5.9	43.5	19.6
0.4	45	16.7	7.5	41.7	18.8
0.5	45	20.0	9.0	40.0	18.0
0.6	45	23.1	10.4	38.5	17.3
0.7	45	25.9	11.7	37.0	16.7
0.8	45	28.6	12.9	35.0	16.1
0.9	45	31.0	14.0	34.5	15.5
1.0	45	33.3	16.0	33.3	15.0
1.1	45	35.5	16.0	32.3	14.5
1.2	45	37.5	16.7	31.3	14.1
1.3	45	39.4	17.7	30.3	13.6
1.4	45	41.2	18.5	29.4	13.2
1.5	45	42.9	19.3	28.6	12.9
1.6	45	44.4	20.0	27.8	12.5
1.7	45	46.0	20.7	27.0	12.2
1.8	45	47.4	21.3	26.3	11.8
1.9	45	48.7	21.9	25.6	11.5
2.0	45	50.0	22.5	25.0	11.3

TABLE III-OB-OR-6 - NITRIFICATION REACTORS NOS 4, 5, AND 6

RATIO STATION SETTING	MAXIMUM TOTAL RETURN SLUDGE FLOW	ADJUSTED RATIO RATE CONTROLLER FLOW		1.0 RATIO RATE CONTROLLER FLOW	
		PERCENT OF TOTAL	MAXIMUM RATE MGD	PERCENT OF TOTAL	MAXIMUM RATE MGD
0.4	60	16.7	10.0	41.7	25.0
0.5	60	20.0	12.0	40.0	24.0
0.6	60	23.1	13.8	38.5	23.1
0.7	60	25.9	15.5	37.0	22.2
0.8	60	28.6	17.1	35.1	21.4
0.9	60	31.0	18.6	34.5	20.7
1.0	60	33.3	20.0	33.0	20.0
1.1	60	35.5	21.3	32.3	19.4
1.2	60	37.5	22.5	31.3	18.8
1.3	60	39.4	23.6	30.3	18.2
1.4	60	41.2	24.7	29.4	17.6

(5) AUTOMATIC "STRAIGHT 6" OPERATION

Under this mode, Reactors Nos. 1, 2, 3, 4, 5 and 6 are in single-stage nitrification service (the plant is operating in the parallel mode) or in carbonaceous stage service (the plant is operating in the series mode). The rate controller equipment may be arranged to operate as described herein under "3-3" Operation or under "2-4" Operation.

(6) AUTOMATIC "2-4" OPERATION

Under this mode of operation, the plant is operating in the parallel mode, Reactors Nos. 1 and 2 are in carbonaceous stage service and Reactors Nos. 3, 4, 5 and 6 are in nitrification stage service.

When the CLOSE-AUTO-MANUAL selector switches on Control Stations G-37 and 38 are in the AUTO position and the switch on Control Station G-39 is in the CLOSE position and the ratio knobs on Control Stations G-37 and 38 are each set a 1.0, the motor operated butterfly valves in Rate Controllers MRC-6 and MRC-7 will modulate to equally divide the total carbonaceous stage return sludge to Reactors Nos. 1 and 2. The motor operated butterfly valves modulate in response to the ratio knob setting on Control Station G-37 and 38 and in response to a signal from Master Valve Position Indicating Control G-28 (see Figure III-OB-OR-4).

NOTE

An initial setting of 60 percent is recommended for Master Valve Position Indicating Controller G-28. The set point may be adjusted as required to maintain stable operation.

When the CLOSE-AUTO-MANUAL selector switches on Control Station G-40, 41, 42 and 43 are in the AUTO position and the ratio knobs on each control station is set at 1.0, the motor operated butterfly valves in Ratio Controller MRC-9, 10, 11 and 12 will modulate to equally divide the total nitrification stage return sludge to Reactors Nos. 3, 4, 5, and 6. The motor operated butterfly valves modulate in response to the ratio knob setting on Control Stations G-40, 41, 42, and 43 and in response to a signal from Master Valve Position Indicating Controller G-29 (see Figure III-OB-OR-4).

NOTE

An initial setting of 60 percent is recommended for Master Valve Position Indicating Controller G-29. The set point may be adjusted as required to maintain stable operation.

(7) ALTERNATE "2-4" OPERATION (UNEQUAL RETURN SLUDGE DISTRIBUTION)

Control Stations G-37, 38, 39, 40, 41, 42 and 43 are provided with ratio knobs which can be set to distribute the return sludge flow to the reactors in unequal proportions. When the CLOSE-AUTO-MANUAL selector switches on the control stations are set as described herein before under "2-4" Operation the flow distribution of the return sludge to the Carbonaceous or Nitrification Stage Reactors may be varied by adjusting the ratio station settings as shown in Tables III-OB-OR-7 and 8. Under this mode of operation, the ratio knob setting for one reactor is changed and the ratio knob settings for the remaining Carbonaceous or Nitrification Stage Reactors remain set at 1.0. Table III-OB-OR-7 and 8 show only those ratio settings which will produce flows within the flow range of the rate controllers.

TABLE III-OB-OR-7 - CARBONACEOUS REACTORS NOS. 1 AND 2

RATIO STATION SETTING	MAXIMUM TOTAL RETURN SLUDGE FLOW	ADJUSTED RATIO RATE CONTROLLER FLOW		1.0 RATIO RATE CONTROLLER FLOW	
		PERCENT OF TOTAL	MAXIMUM RATE MGD	PERCENT OF TOTAL	MAXIMUM RATE MGD
0.8	45	44.4	20.0	55.6	25.0
0.9	45	47.4	21.3	52.6	23.7
1.0	45	50.0	22.5	50.0	22.5
1.1	45	52.4	23.6	47.6	21.4
1.2	45	54.5	21.5	45.5	20.5

TABLE III-OB-OR-8 - NITRIFICATION REACTORS NOS. 3, 4, 5, AND 6

RATIO STATION SETTING	MAXIMUM TOTAL RETURN SLUDGE FLOW	ADJUSTED RATIO RATE CONTROLLER FLOW		1.0 RATIO RATE CONTROLLER FLOW	
		PERCENT OF TOTAL	MAXIMUM RATE MGD	PERCENT OF TOTAL	MAXIMUM RATE MGD
0.4	60	11.8	7.1	29.4	17.6
0.5	60	14.3	8.6	28.7	17.1
0.6	60	16.7	10.0	27.8	16.7
0.7	60	21.1	12.6	26.3	15.8
0.8	60	23.1	13.8	25.6	15.4
1.0	60	25.0	15.0	25.0	15.0
1.1	60	26.8	16.1	24.4	14.6
1.2	60	28.6	17.1	23.8	14.3
1.3	60	30.2	18.1	23.2	14.0
1.4	60	31.8	19.1	22.7	13.6
1.5	60	33.3	20.0	22.2	13.3
1.6	60	34.8	20.9	21.7	13.0
1.7	60	36.2	21.7	21.3	12.8
1.8	60	37.5	22.5	20.8	12.5
1.9	60	38.8	23.3	20.4	12.2
2.0	60	40.0	24.0	20.0	12.0

(8) MANUAL OPERATION FROM MOTOR OPERATORS

Each rate controller may be manually operated from the controller mounted near each unit. Behind the cover of each controller is an CLOSE-MANUAL-AUTO selector switch and a set point station calibrated from 0 to 25 mgd. To operate the controller equipment manually, move the selector switch to the MANUAL position and set the desired flow rate on the point station.

(9) START-UP AND SHUTDOWN PROCEDURES

To start up an shut down the rate controller equipment use the following procedures:

a. START-UP

For normal operation, refer to Figure III-OB-OR-1 and open the manually operated Valves, designated RS-181, 182, 186,187 and 188.

Open or close each manually operated Valve RS-183 and RS-185, depending on the type of service (carbonaceous, nitrification or neither) selected for Reactor No.3.

Place the OFF-MANUAL-AUTO selector switch on each local controller in the AUTO position

For normal manual operation, set the ON-OFF and CLOSE-AUTO-MANUAL selector switches on Control Station G-37, 38, 40, 41, 42, and 43 in the ON and MANUAL position, respectively

Set the desired flow rate (from 0 to 25 mgd) on each set point station.

b. SHUTDOWN
Place the CLOSE-AUTO-MANUAL selector switch on the associated control station on the PMTC in the CLOSE position

Close the manually operated butterfly valve upstream of the rate controller (see Figure III-OB-OR-1)

(10) MONITORS
Torque switches are provided to de-energize the butterfly valve motor operator if the valve movement becomes obstructed.

Flow indication for Rate Controllers MRC-6, 7, 8, 9, 10, 11 and 12 is provided locally at the units and on Indicators G-30, 31, 32, 33, 34, 35 and 36, respectively, on the PMTC.

Each butterfly valve is provided with a position indicator on its motor operator.

I. REACTOR'S PURGE AIR RATE CONTROLLER EQUIPMENT: MPA-6, 7, 8, 9, 10 AND 11

(1) DESCRIPTION
The reactor's purge air rate controller equipment is provided to supply a controlled rate of process air to each of the Carbonaceous and Nitrification Stage Reactors in service when a combustible gas alarm occurs in the Reactors.

The purge air rate controller equipment consists of six venturi meters with integral motor-operated butterfly valves, designated MPA-6, 7, 8, 9, 10 and 11, and associated flow transmitters and instrumentation on the Oxygen Dissolution and Equipment Control Cabinet (ODECC) in the Main Pumping Station. Instruments on the ODECC include two Master Set Point Stations, designated GD-15 and 16 serving the Carbonaceous and Nitrification Stage Reactors, respectively, and six Indicating-Controllers, designated GD-17, 18, 19, 20, 21 and 22 serving Rate Controllers MPA-6, 7, 8, 9, 10 and 11, respectively.

Each meter is a modified type, cast-iron 14-inch venturi tube with integral modulating electric motor-operated, butterfly valve. Each rate controller has a flow range of 400 to 2,800 cfm.

(2) NORMAL OPERATION
Under normal operation, when a combustible gas concentration equal to 25 percent LEL is detected in any one of the Carbonaceous or Nitrification Stage Reactors in service the purge air rate controller associated with each Carbonaceous or Nitrification Stage Reactor in service will open and purge its associated reactor

at a preset air flow rate. The purge air rate controller equipment will continue to purge each reactor until the alarm has been reset.

When the CLOSE-OFF-AUTO selector switches on Indicating Controllers GD-17, 18, 19, 20, 21, and 22 on the Oxygen Dissolution Equipment Control Cabinet (ODECC) are in the AUTO position and the desired purge air flow rate is set on Master Set Point Stations GD-15 and 16 on the ODECC for the Carbonaceous and Nitrification Stage Reactors, respectively, the purge air rate controllers will automatically purge their associated reactors when a 25 percent LEL combustible gas alarm occurs. An air flow rate of 1,500 cubic feet per minute is recommended.

(3) START-UP AND SHUTDOWN PROCEDURES

To start up and shut down the purge air equipment use the following procedures:

a. START-UP

Make sure that the process air blower equipment is operating as described in the section headed "Main Pumping Station"

Refer to Figure III-OB-OR-5 and open the manually operated Valves, designated PR-134, 135, 136, 137, 138, 140, 141, 142, 143, 144 and 145

On the Oxygen Dissolution Equipment Control Cabinet (ODECC) in the Main Pumping Station, set the CLOSE-AUTO-MANUAL and ON-OFF switches on Indicating Controller GD-17, 18, 19, 20, 21 and 22 in the AUTO and ON positions, respectively, if the associated reactor is in service and in the CLOSE and OFF positions, respectively, if the associated reactor is not in service

Set the desired purge air flow rate (2,200 cfm recommended) for the Carbonaceous and Nitrification Stage Reactors on Master Set Point Controllers GD-15 and 16, respectively

b. SHUTDOWN

Place the CLOSE-AUTO-MANUAL selector switches on Indicating Controllers GD-17, 18, 19, 20, 21 and 22 in the CLOSE position

(4) ALTERNATE OPERATION

a. TIMED AIR PURGE

The purge air equipment is arranged to permit manual purging of the Carbonaceous or Nitrification Stage Reactors for an adjustable period of time (0 to 150 minutes).

The Carbonaceous Stage Reactors will be manually purged for a selected period of time by setting the selected period on Timer TMR-703 and placing the NORMAL-BYPASS selector switch in the BYPASS selector switch is returned to the Normal position or Timer TMR-703 has been reset for an additional period of time.

The Nitrification Stage Reactors will be manually purged for a selected period of time by setting the selected period on Timer TMR-803 and placing the NORMAL-BYPASS selector switch in the BYPASS position on the ODECC. While the Nitrification Stage Reactors are being manually purged, tbe "Nitrification LEL Alarm Bypass" indicating light will be illuminated. After Timer TMR-803 has timed out, the purge air rate controller equipment will automatically stop purging the Nitrification Stage Reactors and the "Bypass Override" indicating light will then remain illuminated until the NORMAL-BYPASS selector switch is returned to the NORMAL position or Timer TMR-803 has been reset for an additional period of time.

b. MANUAL OPERATION FROM THE OXYGEN DISSOLUTION EQUIPMENT CONTROL CABINET

Indicating Controllers GD-17, 18, 19, 20, 21 and 22 on the ODECC are provided with set point stations calibrated form 0 to 3,000 cfm and CLOSE-AUTO-MANUAL selector switches. To operate a purge air rate controller manually, place the associated selector switch to MANUAL and set desired flow rate on the indicating controller.

c. MANUAL OPERATION FROM MOTOR OPERATORS

Each rate controller may be manually operated from the controller mounted near each unit. Behind the cover of each controller is a CLOSE-MANUAL-AUTO selector switch and a set point station calibrated from 0 to 3,000 cfm.

To operate the rate controller equipment manually, move the selector switch to the MANUAL position and set the desired flow rate on the set point station.

(5) MONITORS

Torque switches are provided to de-energize the butterfly valve operations if the gate movement becomes obstructed.

Flow indication for Rate Controller MPA-6, 7, 8, 9, 10 and 11 is provided locally at the units and on Indicating Controllers GD-17, 18, 19, 20, 21 and 22, respectively, on the Oxygen Dissolution Equipment Control Cabinet.

J. REACTOR'S OXYGEN PRESSURE CONTROL EQUIPMENT

(1) DESCRIPTION

The pressure control equipment is provided to automatically control the oxygen pressure in the Carbonaceous and Nitrification Stage Reactors and thereby control the oxygen supply.

The system is provided to control the flow of gaseous oxygen (GOX) to the reactors. For the purposes of control, the 6 reactors are divided into two 3-reactor systems. One system is essentially for the carbonaceous stage and one for the nitrification stage when the HPO system is operated in the two-step mode. A pressure sensing line runs from the first stage of each of the three reactors for the carbonaceous

system to a common pressure sensor. Similar pressure sensing lines also serve the nitrification reactors with a common pressure sensor.

Each pressure sensor is connected to a transmitter which sends an average signal to the pressure controller on the Oxygen Dissolution Control Cabinet. The controller will modulate the pressure control valves OG-190 and OG-195 (see Figure III-OB-OR-5) to within ± 2 inches in W.C.

The sensing line for Reactor No. 3 is connected to both systems so that it can act as part of either carbonaceous or nitrification system.

CAUTION

Each reactor is provided with a pressure-vacuum relief valve in the first and fourth stage. The pressure-vacuum relief valves in the first stage are set to open at 4 inches water column vacuum and 6 inches water column pressure. The pressure-vacuum relief valves in the fourth stage are set to open at 4 inches water column vacuum and 5 inches water column pressure.

(2) NORMAL OPERATION

Each local controller at Pressure Control Valves OG-190 and OG-195 is provided with a CLOSE-AUTO-MANUAL selector switch. Under normal operation, when the CLOSE-AUTO-MANUAL selector switches are in the AUTO positions, the Carbonaceous and Nitrification Stage Reactors pressure is controlled at the pressure set on the Oxygen Dissolution Equipment Control Cabinet.

(3) START-UP AND SHUTDOWN PROCEDURES

To start up and shut down the pressure control equipment use the following procedures:

a. START-UP

Set the desired oxygen pressure for the Carbonaceous and Nitrification Stage Reactors, respectively

Open the manually operated Valves, designated OG-191 and 196, downstream of Valves OG-190 and OG-195 (see Figure III-OB-OR-5)

For "3-3" mode of operation, open the manually operated Valve, designated OG-176 (see Figure III-OB-OR-5)

For "2-4" mode of operation open the manually operated Valve, designated OG-177 (see Figure III-OB-OR-5)

Set the CLOSE-AUTO-MANUAL selector switches at the local controllers for Pressure Control Valves OG-190 and OG-195 in the AUTO position

b. SHUTDOWN

Place the CLOSE-AUTO-MANUAL selector switch at the local controller for Pressure Control Valves OG-190 and OG-195 in the CLOSE position

K. REACTOR'S OXYGEN SUPPLY FLOW MEASURING EQUIPMENT: MO-1 AND MO-2

(1) DESCRIPTION

The oxygen supply flow measuring equipment is provided to measure, indicate and record oxygen flow to the Carbonaceous and Nitrification Stage Reactors.

The oxygen supply flow measuring equipment consists of two venturi meters, designated MO-1 and MO-2, two temperature probes, two temperature transmitters, two indicating flow transmitters, two flow temperature correction transmitters and two indicating recorders, designated GD-1 and GD-8.

Meters MO-1 and MO-2 are modified type, stainless steel, 12-inch insert type venturi tubes with a flow range of 133 to 1,330 cfm. Each meter automatically corrects its measured flow rate for temperature.

(2) NORMAL OPERATION

Meter MO-1 measures, indicates and records the oxygen flow rate to the Carbonaceous Stage Reactors No. 1-3.

Meter MO-2 measures, indicates and records the oxygen flow rate to the Nitrification Stage Reactors No. 4-6.

(3) MONITORS

The oxygen flow rate to the Carbonaceous Stage Reactors is indicated and recorded on Indicator Recorder GD-1 on the ODECC. The oxygen flow rate to the Nitrification Stage Reactors is indicated and recorded on Indicator Recorder GD-8 on the ODECC. Each flow rate will be transmitted to the SCADA System.

L. REACTOR'S OXYGEN SUPPLY VALVES

(1) DESCRIPTION

The reactors oxygen supply valves are provided to permit oxygen flow into the reactors under normal operation and to automatically stop oxygen flow to the reactors when a 25 percent LEL combustible gas alarm occurs.

The oxygen supply valves to Reactors Nos. 1, 2, 3, 4, 5, and 6 are designated OG-194, 193, 192, 197, 198 and 199, respectively (see Figure III-OB-OR-5). Each valve is provided with an electric motor operator and a CLOSE-HOLD-OPEN-AUTO selector switch with indicating lights on the Oxygen Dissolution Equipment Control Cabinet (ODECC).

Each supply valve is an 8-inch electric motor operated butterfly valve and is intended to be in the completely OPEN or completely CLOSED position. The butterfly valves are located in the reactors oxygen supply lines (see Figure III-OB-OR-5).

(2) NORMAL OPERATION

Under normal operation, when the CLOSE-HOLD-OPEN-AUTO selector switch for each supply valve is in the AUTO position each valve will be in the completely OPEN position. If a 25 percent LEL combustible gas alarm occurs in the reactors, the associated motor-operated butterfly valves will automatically close. The valves will remain closed until the alarm condition has cleared and the alarm has been reset.

(3) START-UP AND SHUTDOWN PROCEDURES

To start up and shut down the oxygen supply valves use the following procedures:

a. START-UP

Place the CLOSE-HOLD-OPEN-AUTO selector switch on the ODECC for each oxygen supply valve in the AUTO position.

b. SHUTDOWN

Place the CLOSE-HOLD-OPEN-AUTO selector switch for each oxygen supply valve in the CLOSE position.

(4) ALTERNATE OPERATION

The motor-operated butterfly valves can be manually operated from the ODECC. To operate a valve manually, place the CLOSE-HOLD-OPEN-AUTO selector switch in the CLOSE or OPEN position to completely close or open the valve or in the HOLD position to stop the valve in an INTERMEDIATE position.

CAUTION

A valve being operated manually will NOT automatically close if a 25 percent LEL combustible gas alarm occurs, manually close the valve by placing the CLOSE-HOLD-OPEN-AUTO selector switch in the CLOSE position.

(5) MONITOR

Torque switches are provided to de-energize the butterfly valve motor operators if the movement becomes obstructed. Position indicating lights are provided for each valve on the ODECC.

M. REACTOR'S OXYGEN VENT GAS EQUIPMENT

(1) DESCRIPTION

The oxygen vent gas equipment is provided to automatically control the vent gas flow from the Reactors 4th Stage to maintain oxygen purity at a preset value.

The oxygen vent gas equipment consists of six venturi meters, designated MO-3, 4, 5, 6, 7 and 8 and six associated motor operated butterfly valves, designated M-206, 207, 208, 209, 210 and 211, respectively, with associated oxygen purity indicators, designated GD-4 and 11 and manual Oxygen Purity Set Point Station, designated GD-4A and 11A on the Oxygen Dissolution Equipment Control Cabinet.

Meters MO-3, 4, 5, 6, 7 and 8 are modified type, stainless steel, 4-inch insert type venturi tubes with a flow range of 10 to 150 cfm.

Each 4-inch butterfly valve is provided with a modulating electric motor operator and local valve controller.

(2) NORMAL OPERATION

Under normal operation, the 4-inch Oxygen Vent Valves located in Stage 4 of Reactors No. 1 through 6 are manually opened or closed from the PMTC to adjust oxygen purity of gases in the reactors to a desired percentage.

If the oxygen purity indicated on the PMTC is lower than desired, the vent valve for the reactor being sampled should be opened until oxygen purity for that reactor rises to the desired level. If the oxygen purity indicated on the PMTC is higher than desired, the vent valve for the reactor being sampled should be closed until oxygen purity for that reactor decreases to the desired level.

(3) START-UP AND SHUTDOWN PROCEDURES

To start up and shut down the oxygen vent gas equipment use the following procedures:

a. START-UP

Make sure that the "Reactor' s Combustible Gas and Oxygen Purity Analysis System" is operating

Place the LOCAL-OFF-REMOTE selector switch located at the valve actuator in the REMOTE position

Use the vent valve CLOSE-STOP-OPEN control switch located on the PMTC to modify vent valve position

NOTE

Oxygen purity is shown on indicator GD-4 for the Carbonaceous Reactor being sampled, and on indicators GD-5 and GD-12 for the Carbonaceous and Nitrification Reactors, respectively. Use these meters to determine vent valve control needed.

b. SHUTDOWN

Place the OPEN-STOP-CLOSE selector switch located at the valve actuator or at PMTC in the CLOSED position

Place the LOCAL-OFF-REMOTE selector switch located at the valve actuator in the OFF position.

NOTE

Do not shut down the oxygen vent gas equipment unless the associated reactor is out of service.

(4) ALTERNATE OPERATION

Oxygen vent valves may be controlled at the valve actuator by placing valve selector switches in the LOCAL mode or by using the valve actuator OPEN-STOP-CLOSE switch to vary the valve position.

(5) MONITOR

Torque switches are provided to de-energize the butterfly valve operators if the movement becomes obstructed. Flow indication for Meters MD-3, 4, 5, 6, 7 and 8 is provided locally at the units. The flow signal will be transmitted to the SCADA System.

Six Oxygen Vent Valve Position Indicators are located on the Process Monitoring and Terminal Cabinet (PMTC), Panel AU. Valve position from 0 to 100 percent is shown.

Six Control Location Indicating Lights are provided on the PMTC (Panel AU and BU). Amber denotes that the Vent Valves are controlled from Panel AU. Blue indicates vent valve control at Panel BU.

N. REACTOR' S COMBUSTIBLE GAS AND OXYGEN PURITY ANALYSIS SYSTEM

(1) DESCRIPTION

The reactor's combustible gas and oxygen purity analysis system is provided to sequentially sample the atmosphere of each reactor at two locations: at the stage where primary influent is introduced, and at Stage 4. While in step feed, the first sample is taken from Stage 2. The first sample is taken from Stage 1 when the Reactors are operating in the plug feed mode.

Samples are automatically analyzed for oxygen purity and combustible gas. The combustible gas analysis equipment will initiate an alarm in response to combustible gas concentrations in excess of 25 and 50 percent LEL. The oxygen purity analysis equipment indicates actual vent gas oxygen purity and provides

a signal to the oxygen vent gas equipment described hereinbefore to regulate vent gas flow based on a set point purity.

The reactor' s combustible gas and oxygen purity analysis system consists of sample piping from each reactor, controls and instruments on the Reactor's Gas Monitoring System Panel (RGMSP), the Oxygen Dissolution Equipment Control Cabinet (ODECC) and the Process Monitoring and Terminal Cabinet (PMTC) in the Main Pumping Station (see Figure III-OB-OR-5).

Controls and equipment on the RGMSP include electric operated solenoid valves, two oxygen purity analyzers, two duplex gas sample pumping units mounted in the rear of the panel, two combustible gas analyzing-indicating-transmitters, two vent gas oxygen purity analyzing-indicating-transmitters, sample sequence indicating lights, rotameters, manual valves, a cycle timer, selector switches and push buttons. Refer to the Contractor's O&M Manual for diagrams and drawings of the RGMSP.

Controls and instruments on the ODECC include vent gas oxygen purity Indicators GD-4 and 11, vent gas purity Set Point Stations GD-4A and 11A, combustible gas concentration Indicators GD-5 and 12 with associated alarm Indicating Lights GD-6, 7, 13 and 14 and mode Transfer Switch GD-29.

Controls and instrumentation on the PMTC consist of Vent Valve selector switches, MANUAL-AUTO Sample Selection Step Control Selector Switch, Manual Sample Selection Step push button, Sample Selection Control Location Switch, sample sequence indicating lights, and Oxygen Vent Valve position indicators.

(2) "3-3" OPERATION

One duplex gas sampling pump, one combustible gas analyzing-indicating-transmitter and one vent gas oxygen purity analyzing-indicating-transmitter on the RGMSP are provided to analyze, indicate and transmit the combustible gas concentration and vent gas oxygen purity of the Carbonaceous Stage Reactors. One duplex gas sampling pump, one combustible gas analyzing-indicating-transmitter and one vent gas oxygen purity analyzing-indicating-transmitter on the RGMSP are provided to analyze, indicate and transmit the combustible gas concentration and vent gas oxygen purity of the Nitrification Stage Reactors.

Under this mode of operation, the reactors are in the "3-3" mode of operation (refer to subsection headed "Reactors" for detailed information). When the Mode Transfer Switch GD-29 (MODE 1 - MODE 2) is in the MODE 2 position on the ODECC in the Main Pumping Station and the MANUAL-AUTO selector switch on the RGMSP is in the AUTO position, gas sample from Reactors Nos. 1, 2 and 3 will be analyzed by the equipment provided for the Carbonaceous Stage Reactors and gas samples from Reactors Nos. 4, 5 and 6 will be analyzed by the equipment provided for the Nitrification stage Reactors.

The Reactor's Combustible Gas and Oxygen Purity Analysis System is arranged so that, at any given time, samples from the following locations are being analyzed:

- From a Carbonaceous Reactor - at the stage where primary influent is introduced

- From a Carbonaceous Reactor - at stage 4
- From a Nitrification Reactor - at stage 1
- From a Nitrification Reactor - at stage 4

The RGMSP is provided with a programmer which will cause the Carbonaceous and a Nitrification Reactors to be sampled in sequence as shown in Table III-OB-OR-9 each time an adjustable (0 to 30 minutes) timer times out (an initial timer setting of 10 minutes is recommended). The programmer automatically returns to the first sequence (Sequence A, see Table III-OB-OR-9) after the last sequence (sequence F, see Table III-OB-OR-9) has timed out. That is, the sampling and analyzing equipment in the RGMSP will analyze samples drawn from the stages of those reactors shown for Sequence F in Table III-OB-OR-9 until the adjustable timer (set for 10 minutes) times out; then the sampling and analyzing equipment will automatically stop sampling from Sequence F locations and begin sampling and analyzing from Sequence A locations. The programmer will then cycle through each of the following sequences in a similar manner.

TABLE III-OB-OR-9 - "3-3" OPERATION COMBUSTIBLE GAS AND OXYGEN PURITY SAMPLE SEQUENCE

SEQUENCE	SAMPLE BEING ANALYZED FOR COMBUSTIBLE GAS CONCENTRATION				NEXT SAMPLE PURGING		FOURTH STAGE VENT GAS OXYGEN PURITY ANALYSIS	
	CARBONACEOUS		NITRIFICATION		FIRST STAGE REACTOR	FOURTH STAGE REACTOR	CARBONA-CEOUS	NITRIFICA-TION
	REACTOR	STAGE	REACTOR	STAGE			REACTOR	REACTOR
A	1	1 or 2	4	4	5	2	2	4
B	2	4	5	1	3	6	2	6
C	3	1	6	4	4	1	1	6
D	1	4	4	1	2	5	1	5
E	2	1 or 2	5	4	6	3	3	5
F	3	4	6	1	1	4	3	4

As an example, for Sequence B:

- The sample from Reactor 2, Stage 4, is being analyzed for combustible gas concentration and vent gas oxygen purity.
- The sample from Reactor 5, Stage 1, is being analyzed for combustible gas concentration
- The sample from Reactor 3, Stage 1, is being purged for combustible gas concentration analysis, next under Sequence C.
- The sample from Reactor 6, Stage 4, is being purged for combustible gas concentration analysis, next under Sequence C and is being analyzed for oxygen purity.

When a combustible gas concentration equal to 25 percent LEL is detected in a carbonaceous or Nitrification Stage Reactor, the following will occur:

- The programmer will stop and hold at the sequence which detected the alarm.

- The alarm horn on the RGMSP will sound.
- The associated 25 percent LEL alarm light on the ODECC in the Main Pumping Station will illuminate.
- The oxygen supply valves to the associated reactors will close (see the subsection headed "Reactor's Oxygen Supply Valves").
- The purge air rate controller equipment will begin to purge the associated reactors (see the subsection headed "Reactor's Purge Air Rate Controller Equipment").

If the combustible gas concentration increases to 50 percent LEL the associated mechanical aerators will automatically shut down and the 50 percent LEL alarm light on the ODE will illuminate.

All of the above will continue until the combustible gas concentration drops below 25 percent LEL and the RESET push button on the RGMSP has been pushed. Refer to Chapter IX, Emergencies, for procedure to be followed upon occurrence of a combustible gas alarm.

The output signal from the vent gas oxygen purity analyzers in the RGMSP for the Carbonaceous and Nitrification Stage Reactors is transmitted to the PMTC and the SCADA system. The motor operated vent valve can be manually adjusted as described hereinbefore to maintain the desired gas oxygen purity level.

(3) "2-4 " OPERATION

Under this mode of operation, the reactors are in the "2-4" mode of operation (refer to subsection headed "Reactors" for detailed information). When the Mode Transfer Switch GD-29 (Mode I Mode II) is in the Mode I position on the ODECC in the Main Pumping Station and the MANUAL-AUTO selector switch on the RGMSP is in the AUTO position, gas sample from Reactors Nos. 1 and 2 will be analyzed by the equipment provided for the Carbonaceous Stage Reactors and gas samples from Reactors Nos. 3, 4, 5 and 6 will be analyzed by the equipment provided for the Nitrification Stage Reactors

The Reactor's Combustible Gas and Oxygen Purity Analysis System is so that, at any given time, samples from the following locations are being analyzed:

- From a Carbonaceous Reactor - at the stage where primary influent is introduced
- From a Carbonaceous Reactor - at stage 4
- From a Nitrification Reactor - at stage 1
- From a Nitrification Reactor - at stage 4

The RGMSP is provided with a programer which will cause the Carbonaceous and a Nitrification Reactors to be sampled in sequence as shown in Table III-OB-OR-10 each time an adjustable (0 to 30 minutes) timer times out (an initial timer setting of 10 minutes is recommended). The programmer automatically returns to the first sequence (Sequence A, see Table III-OB-OR-10), after the last sequence (Sequence H, see Table III-OB-OR-10) has timed out. That is, the sampling and analyzing equipment in the RGMSP will analyze samples drawn from the stages of those Reactors shown for Sequence H in Table III-OB-OR-10 until the adjustable timer times out; then the sampling and analyzing equipment will automatically stop

sampling form Sequence H locations and begin sampling and analyzing from Sequence A locations. The programmer will then cycle through each of the following sequences in a similar manner.

TABLE III-OB-OR-10 - "2-4" OPERATION COMBUSTIBLE GAS AND OXYGEN PURITY SAMPLE SEQUENCE

	SAMPLE BEING ANALYZED FOR COMBUSTIBLE GAS CONCENTRATION				NEXT SAMPLE PURGING		FOURTH STAGE VENT GAS OXYGEN PURITY ANALYSIS	
	CARBONACEOUS		NITRIFICATION		FIRST STAGE REACTOR	FOURTH STAGE REACTOR	CARBONA-CEOUS	NITRIFICA-TION
SEQUENCE	REACTOR	STAGE	REACTOR	STAGE			REACTOR	REACTOR
A	1	1 or 2	4	4	3	1	1	4
B	1	4	3	1	2	5	1	5
C	2	1 or 2	5	4	4	2	2	5
D	2	4	4	1	1	6	2	6
E	1	1 or 2	6	4	5	1	1	6
F	1	4	5	1	2	3	1	3
G	2	1 or 2	3	4	6	2	2	3
H	2	4	6	1	1	4	2	4

As an example, for Sequence B:

- The sample from Reactor 1, Stage 4, is being analyzed for combustible gas concentration and vent gas purity
- The sample from Reactor 3, Stage 1 , is being analyzed for combustible gas concentration
- The sample from Reactor 2, Stage 1, is being purged for combustible gas concentration analysis, next under Sequence C
- The sample from Reactor 5, Stage 4, is being purged for combustible gas concentration analysis, next under Sequence C and is being analyzed for vent gas oxygen purity

When a combustible gas concentration equal to 25 percent LEL is detected in a Carbonaceous or Nitrification Stage Reactor, the following will occur:

- The programmer will stop and hold at the sequence which detected the alarm
- The alarm horn on the RGMSP will sound
- The alarm light on the RGMSP will flash

- The associated 25 percent LEL alarm light on the ODECC in the Main Pumping Station will illuminate

- The oxygen supply valves to the associated reactors will close (see the subsection headed "Reactor's Oxygen Supply Valves")

- The purge air rate controller equipment will begin to purge the associated reactors (see the subsection headed "Reactor's Purge Air Rate Controller Equipment")

If the combustible gas concentration increases to 50 percent LEL the associated mechanical aerators will automatically shut down and the 50 percent LEL alarm light on the ODECC will illuminate.

All of the above will continue until the combustible gas concentration drops below 25 percent LEL and the RESET push button on the RGMSP has been pushed. Refer to Chapter IX, Emergencies, for procedures to be followed upon occurrence of a combustible gas alarm.

The output signal from the vent gas oxygen purity analyzer in the RGMSP for the Carbonaceous and Nitrification Stage Reactors is transmitted to the PMTC and the SCADA system. The motor operated vent valve can be manually adjusted as described hereinbefore to maintain the desired gas oxygen purity level.

(4) MANUAL SEQUENCE CONTROL

The gas sampling sequence can be manually controlled from the Reactor's Gas Monitoring System Panel (RGMSP) when the AUTO-MANUAL switch on the RGMSP is in the MANUAL position. Place the carbonaceous-nitrification selector switch on the RGMSP in the CARBONACEOUS position for "3-3" mode of operation or in the Nitrification position for "2-4" mode of operation. Pushing the MANUAL STEP button will advanced the gas sampling sequence.

(5) START-UP AND SHUTDOWN PROCEDURES

To start up and shut down the Reactor's Combustible Gas and Oxygen Purity Analysis System use the following procedures:

a. START-UP

Set Mode Transfer Switch GD-29 on the Oxygen Dissolution Equipment Control Cabinet in the MODE 1 position when the reactors are in "2-4" mode of operation or in the MODE 2 position when the reactors are in "3-3" mode of operation.

Close the circuit breaker for the reactor's gas monitoring system panel (RGMSP) on Motor Control Center MCC-32 in the Main Pumping Station.

Place the MANUAL-AUTO switch on the RGMSP in the AUTO position.

Set the desired sample time duration on the RGMSP (initial setting of 10 minutes is recommended).

b. SHUTDOWN

Open the Circuit Breaker for the RGMSP on Motor Control Center MCC-32.

(6) MONITORS AND ALARMS

Indicating lights are provided for 25 and 50 percent combustible gas alarm status indication on the ODECC and on the RGMSP for Carbonaceous and Nitrification Stage alarms.

Indication of the carbonaceous and nitrification stage combustible gas concentration is provided on Indicators GD-5 and 12, respectively, on the ODECC and on Indicators OG-7 and 8 on the RGMSP. Indication of carbonaceous and nitrification stage vent gas oxygen purity is provided on Indicators GD-4 and 11, respectively, on the ODECC and on Indicators OI-1 and 2 on the RGMSP.

Sample Sequence Indicating Lights A, B, C, D, E and F are provided on the RGMSP for "3-3" mode of operation. Sample Sequence Indicating Lights A, B, C, D, E, F, g and H are provided on the RGMSP for "2-4" mode of operation. Reactor No. 3 in carbonaceous or nitrification stage service status indicating lights are provided on the ODE and on the RGMSP. A red flashing light and an alarm horn are provided on top of the RGMSP to indicate 25 and 50 percent LEL alarm.

Two sets of Sample Sequence Indicating Lights are provided on the PMTC (Panel AU and Panel BU). One set indicates sample sequence of Carbonaceous Reactors No. 1, 2 and 3 and Nitrification Reactors No. 4, 5 and 6 and one set indicates sample sequence of Carbonaceous Reactors No. 1 and 2 and Nitrification Reactors No. 3, 4, 5 and 6.

Alarm contacts are provided to relay indication of low pressure for each of the reactor's gas sample pump heads to the SCADA System.

Carbonaceous and nitrification stage combustible gas concentration and alarms and carbonaceous and nitrification stage vent gas oxygen purity will be relayed to SCADA System.

O. MECHANICAL AERATORS: UR-MA-1, 2, 3, 4, 5, 6, 7, 8, 9, 10, 11, 12, 13, 14, 15, 16, 17, 18, 19, 20, 21, 22, 23 AND 24

(1) DESCRIPTION (SEE FIGURE III-OB-OR-1 AND 3)

The mechanical aerators are provided to transfer high purity gaseous oxygen into the mixed liquor and to keep suspended solids in suspension in the reactors.

The reactors are provided with 24 Mechanical Aerators, designated UR-MA-1, 2, 3, 4, 5, 6, 7 8, 9, 10, 11, 12, 13, 14, 15, 16, 17, 18, 19, 20, 21, 22, 23 and 24 (see Figure III-OB-OR-1). Refer to Table III-OB-OR-11 for aerator motor nameplate horsepower and oxygen transfer rates.

TABLE III-OB-OR-11 - MECHANICAL AERATORS

MECHANICAL AERATOR DESIGNATION	MOTOR HORSEPOWER	OXYGEN TRANSFER RATE AT NOMINAL SUBMERGENCE POUNDS/HOUR
UR-MA-1 and 2	150	472
UR-MA-3, 4, 5 and 6	100	404
UR-MA-7, 8, 9, 10, 11 and 12	75	312
UR-MA-13, 14, 15, 16, 17, 18, 19, 20, 21, 22, 23 and 24	60	227

Each mechanical aerator consists of a constant speed motor gear reducer and an impeller. Each impeller is of the 4 bladed pitched blade type.

(2) NORMAL OPERATION

START-STOP push buttons with a locking device for the STOP button a TEST push button are provided at each aerator. Each aerator is provided with START-STOP push buttons and an elapsed time meter on Motor Control Center MCC-32 in the Main Pumping Station.

Under normal operation, when a reactor is in operation, the aerators in each of the four reactor stages is required to be running.

(3) START-UP AND SHUTDOWN PROCEDURES

To start up and shut down the mechanical aerators use the following procedures:

a. START-UP

Push the START button at the unit
Close the circuit breaker on MCC-32
Push the START button on MCC-32

b. SHUTDOWN

Push the STOP button on MCC-32

NOTE

If maintenance is to be performed on the unit, push the STOP button at the unit, engage the locking device and open the circuit breaker on MCC-32. Follow approved **Lookout/Tagout** procedures (See Chapter VI, Safety).

(4) MONITORS AND ALARMS

ON-OFF status indicating lights and an elapsed time meter are provided for each mechanical aerator on MCC-32.

Each mechanical aerator is provided with audible and visual alarm indication on the annunciator panel on MCC-32. The alarms will be relayed to the SCADA System.

P. SAMPLING EQUIPMENT

(1) DESCRIPTION

The sampling equipment is provided to gather liquid samples from the last stage of each reactor in service. These grab samples are used in laboratory tests to periodically measure the DO, Settled Sludge Volume, MLSS, NH_3, NH_4 concentrations in the mixed liquor. In addition, the DO is continuously measured by the DO Monitoring System as describe hereinbelow.

The sampling equipment consists of six sample pumps, designated UR-SP-1, 2, 3, 4, 5 and 6, six collecting barrels and associated controls on the Sample Pump Control Panel.

(2) NORMAL OPERATION

Each pump is provided with START-STOP push buttons with a locking device for the STOP button at the unit and START-STOP push buttons and running indicating lights on the Sample Pump Control Panel located in the Main Pumping Station. Under normal operation, when a reactor is in service, the associated sample pump is required to be in operation.

(3) START-UP AND SHUTDOWN PROCEDURES

To start up and shut down the sample pumps use the following procedures:

a. START-UP

Make sure the associated reactor is in operation

Depress the START push button at the unit or on the Sample Pump Control Panel

b. SHUTDOWN

- Depress the STOP push button at the unit or on the Sample Pump Control Panel

NOTE

If maintenance is to be performed on a sample pump, open the associated circuit breaker and engage the locking device on the STOP push button. Follow approved **Lookout/Tagout** procedures (See Chapter VI, Safety).

(4) MONITORS

Running indicating lights are provided for each sample pump on the Sample pump Control Panel. Refer to the Contractor's O&M Manual for manufacturers literature describing the panel.

Q. DISSOLVED OXYGEN MONITORING SYSTEM

The Dissolved Oxygen (DO) Monitoring System consists of six DO probes, two DO Analyzers No. 1 and 2, two DO Analyzer Cabinets, and remote DO indicators located on the Process Monitoring and Terminal Cabinet (PMTC) in the Main Pumping Station. The analyzers are provided to continuously measure the representative dissolved oxygen concentration in the 4th stage of each reactor.

DO analyzers No.1 and 2 are each mounted in a weatherproof DO Analyzer Cabinet located on top the reactors. Each DO analizer is provided with DO indicators to serve a group of three tanks. DO Analyzer No.1 serves Reactors No. 1-3, and DO Analyzer No.2 serves Reactors No. 4-6.

Each analyzer is provided with high and low DO level alarm set points. Initial recommended high and low alarm set points for the carbonaceous stage service is 14 mg/l and 7 mg/l and for nitrification stage service is 15 mg/l and 6 mg/l, respectively.

Remote indication of the DO concetration is provided on the PMTC. The DO concentration is also transmitted to the SCADA System.

NOTE

The DO Monitoring System must be calibrated periodically based on manufacturer's recommnedations and operational experience.

(1) START-UP AND SHUTDOWN PROCEDURES

To start-up and shut down the the DO Monitoring System, use the following precedures:

a. STAR-UP

Make sure power is supplied to all equipment components
Start the associated sample pump as described hereinbefore
Depress the START push button for the associate analyzer channel

b. SHUTDOWN

Depress the STOP push button for the associated analyzer channel
Shut down the associated sample pump as described hereinbefore

R. CHANNEL AERATION SYSTEM

The channel aeration system in the reactors consists of four Meters, designated MPA-4, 5, 13 and 14, twenty four air diffuser assemblies located in the reactor's influent and effluent channels, and associated butterfly valves (see Figure III-OB-OR-1).

For a complete discussion of the air diffuser system equipment operation and control, refer to the section headed "Process Air Equipment and Systems."

S. CHEMICAL FEEDING

(1) POLYMER FEED EQUIPMENT

The liquid polymer feed equipment is provided to automatically feed polymer to the HPO Reactors Effluent Conduits. Refer to Section III-FL-FB, Filter Building No.1 and 2, and Junction Chamber No. 6, for a complete discussion on the liquid polymer feed equipment.

(2) CHLORINATION EQUIPMENT

The chlorination equipment is provided to feed chlorine solution to both Carbonaceous and Nitrification Return Sludge pipelines for control of sludge bulking as needed. It must be noted that addition of too much chlorine to the return could kill off all microorganisms and hence destroy the entire process. Refer ro Section III-FL-FB, Filter Building No.1 and 2 and Junction Chamber No. 6, for detailed information on the Chlorination Equipment.

T. PLANT AIR

The Plant air equipment in the reactors consists of piping and fittings, a shutoff valve, hose valves, and a moisture trap with an eccentric plug valve.

Compressed air is supplied to the reactors by the plant air system as described in Section III-OB-MPS, headed Main Pumping Station.

U. EFFLUENT WATER

The effluent water equipment in the reactors consists of piping and fittings, shutoff valves and hose valves. Refer to Figures III-SU-UPS-5 through 9.

Effluent water is supplied to the reactors by the general purpose effluent water pumps as described in Section III-FL-FB, headed Building No.1 and 2 and Junction Chamber No.6.

V. POWER DISTRIBUTION SYSTEM

The power distribution system is shown in detail on the contract plans and on various shop drawings. Refer to Table III-OB-OR-1, Oxygen Reactors - Facility Equipment Summary for contract plan and shop drawing numbers which pertain to the power distribution system.

OPERATION AND CONTROL
III-OB-90

III-OB-JC2 JUNCTION CHAMBER AND METER VAULT NO. 2 (006)

A. GENERAL

Junction Chamber No. 2 is a totally enclosed, single-level structure connected by underground conduits to Meter Vault No. 2 which is a two-level structure. These structures, located south of Screen and Grit Building No. 2, contain the following equipment and systems:

- Rate Controller Equipment
- Sump Pump
- Plant Air
- Effluent Water
- Plant Water
- Ventilation Equipment
- Power Distribution System

Influent sewage flows to Junction Chamber and Meter Vault No. 2 by gravity through a 60-inch by 60-inch underground conduit from Screen and Grit Building No. 1 and through a 48-inch by 84-inch underground conduit from Screen and Grit Building No. 2. Effluent sewage flows from Junction Chamber and Meter Vault No. 2 to the following locations (See Figure III-OB-JC2-1):

- Main Pumping Station Wet Well
- Junction Chamber No. 3 and then to Primary Sedimentation Tanks Nos. 1 - 4
- Primary Sedimentation Tanks Nos. 5 - 8

Refer to Table III-OB-JC2-1, Junction Chamber and Meter Vault No. 2 - Facility Equipment Summary, for control numbers, manufacturers, equipment capacities, and operation, maintenance, contract plan and shop drawing references. Refer to the Division 4H4 and 4H11 Contractor's O & M Manual for Manufacturer's Service Manuals pertaining to the rate controller equipment.

B. RATE CONTROLLER EQUIPMENT: MRC-1, MRC-2 AND MRC-4

(1) DESCRIPTION

The rate controller equipment is provided to measure the total effluent flow from Screen and Grit Buildings No. 1 and No. 2. The effluent flow is hydraulically split between the 90-inch diameter conduit to Junction Chamber No. 3 and the 96-inch diameter conduit to Primary Sedimentation Tanks Nos. 5-8. The rate controller equipment can also be used to direct flow to the Main Pumping Station Wet Well.

The Rate Controller Equipment consists of two venturi meters, designated MRC-1 and MRC-4, one magnetic flow meter, designated MRC-2; three Sluice Gates, designated JC2-SG-1, JC2-SG-2 and JC2-SG-4; three electronic transmitters (one serving each venturi meter and mounted locally); two Proportional-Reset Flow Controllers, designated G-5 and G-6 (located on the Process Monitoring and Terminal Cabinet (PMTC) in the Main Pumping Station); a Proportional-Reset Flow Controller for MRC-2, a Proportional Level Controller, designated G-7 (located in the PMTC), indicator-recorders and flow signal summators. The rate controller equipment is operated and controlled either manually or automatically by means of a bubbler type liquid level system and flow control instrumentation (see Figure III-OB-JC2-2).

Meter MRC-1 is a modified type, fabricated steel, 90-inch venturi tube with a flow range of 8 to 80 mgd. Meter MRC-2 is a 60-inch magnetic flow meter which has been scaled to a maximum flow of 80 mgd. Meter MRC-4 is a modified type, fabricated steel, 66-inch venturi tube with a flow range of 10 to 100 mgd.

Sluice Gate JC2-SG-1 is a 90-inch gate, Sluice Gate JC2-SG-2 is a 96-inch gate and Sluice Gate JC2-SG-4 is a 66-inch gate. Each sluice gate is provided with a modulating electric motor operator with a two-position selector switch marked AUTO and MANUAL, OPEN-CLOSE push buttons and a handwheel for manual operation. The selector switch is provided with a keyed locking device. The locking device will not allow the selector switch to be moved without insertion of a key. When the selector switches are in the AUTO position, the motor operators are controlled by flow control instrumentation. Sluice Gate JC-2-SG-4 is also controlled by the bubbler type liquid level system when its selector switch is in the AUTO position. When the selector switches are in the MANUAL position, the sluice gates are operable by either the OPEN-CLOSE push buttons or the handwheel.

Stop log grooves are provided to permit isolation of each sluice gate for maintenance.

(2) NORMAL OPERATION

Under normal operation, the effluent flow is hydraulically divided between the Primary Sedimentation Tanks. Under this operation, JC-2-SG-1 is closed .

The upstream motor-operated Sluice Gates JC2-SG-1, 2 and 4 can be controlled by a feedback flow signal from Proportional Reset Flow Controllers G-5 and G-6, respectively, when the gate mounted selector switch is in the AUTO position. The flow signal causes the sluice gates to modulate to maintain the preset flow division rate over all variations in flow.

When the selector switch on the motor operator for Sluice Gate JC2-SG-1 is in the AUTO position and the AUTO push button on Controller G-5 is depressed, the sluice gate will modulate to limit the flow through Meter MRC-1 to the preselected rate set on Controller G-5.

When the selector switch on the motor operator for Sluice Gate JC2-SG-4 is in the AUTO position, the AUTO push button on Controller G-6 is depressed, the LOCAL-REMOTE switch on Controller G-6 is in the REMOTE position, the sluice gate will modulate to limit flow through Meter MRC-4 based on the preselected high water level in Junction Chamber No. 2 set on Controller G-7. An initial high water level set point for Junction Chamber No. 2 is Elevation 10.00.

CAUTION

On Controller G-5 and G-6, if either the OPEN or CLOSE push button is depressed, the AUTO push button will be disengaged.

(3) START-UP, SHUTDOWN AND DEWATERING PROCEDURES

To start up, shut down and dewater the rate controller equipment, use the following procedures:

a. START-UP

- Make sure the plant air system is operating and open plant air supply line valves to the bubbler type differential liquid level system, located in Junction Chamber No. 2

- Close the circuit breaker for Sluice Gates JC-2-SG-1, 2 and 4, in Motor Control Center MCC-21 in Screen and Grit Building No. 2

- Close the individual circuit breakers for Sluice Gates JC-2-SG-1, 2 and 4, in the Outdoor Circuit Breaker Enclosure which is mounted near each gate

- Place the AUTO-MANUAL selector switches on the sluice gate motor operators in the AUTO position

Proceed to the Process Monitoring and Terminal Cabinet (PMTC) in the Main Pumping Station.

- On Controller G-5 depress the setter lock button and turn the thumb wheel until the selected flow rate appears directly behind the fixed horizontal line on the window of the set point indicating scale. Depress the AUTO push button.

- On Controller G-6 depress the AUTO push button and place the LOCAL-REMOTE selector switch in the REMOTE position.

- On Controller G-7 depress the setter lock button and turn the thumb wheel until the selected high water level appears directly behind the fixed horizontal line on the window of the set point indicating scale. Depress the AUTO push button.

b. SHUTDOWN

- On Controller G-5 or G-6 disengage the AUTO push button by depressing either the LOWER or RAISE push button.

- Depress the MANUAL push button on Controller G-5 or G-6.

NOTE

When the MANUAL push button is depressed, the deviation meter becomes a sluice gate position indicator. The sluice gate is completely closed at -50 percent and completely open at +50 percent.

- Depress the LOWER push button and maintain contact until the sluice gate is completely closed.

NOTE

If maintenance or dewatering is to be preformed, insert the key into the sluice gate motor operator and move the AUTO-MANUAL selector switch to the MANUAL position, make sure the sluice gate is closed and open the circuit breaker in the Outdoor Circuit Breaker Enclosure mounted near the gate. Follow approved **Lockout/Tagout** procedures (See Chapter VI, Safety).

c. DEWATERING

- Shut down the rate controller as described above
- Install stop logs in the associated grooves necessary to completely isolate the rate controller and its associated influent and effluent conduits between Junction Chamber No. 2 and the Main Pumping Station Wet Wall or Junction Chamber No. 3 (see Figure III-OB-JC2-1).
- Open associated dewatering valves (see Figure III-OB-JC2-1)
- Remove cover plate from the dewatering sump and remove one of the manhole cover plates on Junction Chamber No. 2
- Using a portable engine driven sewage pump, pump the water from the dewatering sump to Junction Chamber No. 2 through the open manhole

(4) ALTERNATE OPERATION

a. MANUAL OPERATION FROM PMTC

The position of Sluice Gates JC2-SG-1 and 2 can be manually adjusted from Controller G-5 on the Process Monitoring and Terminal Cabinet (PMTC), and the position of Sluice Gate JC2-SG-4 can be manually adjusted from either Controller G-6 or G-7 on the PMTC.

Controllers G-5 and G-6 are provided with MANUAL-AUTO push buttons and OPEN-CLOSE momentary contact buttons. To manually adjust the position of the associated sluice gate, push either of the momentary contact buttons to release the AUTO push button and depress the MANUAL push button. Depressing the MANUAL push button converts the deviation meter to a sluice gate position indicator. Pushing the OPEN-CLOSE momentary contact button will cause the gate to move in the associated direction until the gate is either completely closed or open, or until the button is released. The sluice gate is completely closed at -50 percent and completely open at +50 percent.

Controller G-7 is provided with MANUAL-AUTO push buttons and an OPEN-CLOSE knob. To manually adjust the position of Sluice Gate JC2-SG-4 from Controller G-7, place the LOCAL-REMOTE selector switch on Controller G-6 to the REMOTE position, release the AUTO push

button (by depressing again) and depress the MANUAL push button. Depressing the MANUAL push button converts the deviation meter to a sluice gate position indicator. Turning the OPEN-CLOSE knob counterclockwise will cause the sluice gate to move toward the close position and clockwise rotation of the knob will cause the sluice gate to move toward the open position. The sluice gate is completely closed at -50 percent and completely open at +50 percent.

b. MANUAL OPERATION FROM MOTOR OPERATORS

To manually adjust the position of Sluice Gate JC2-SG-1, 2 or 4 from their associated motor operator, insert the key into the motor operator and move the AUTO-MANUAL selector switch to the MANUAL position and depress either the OPEN or CLOSE push button.

c. HANDWHEEL OPERATION

Each motor operator is provided with a handwheel for manual operation as follows:

- Depress motor operator declutching lever
- Turn handwheel counterclockwise to open or clockwise to close gate

NOTE

Energizing the motor operator automatically disengages the declutching lever and returns the gate to motor operation.

(5) MONITORS & ALARMS

Torque switches are provided to de-energize the sluice gate motor operators if the gate movement becomes obstructed. Refer to the Division 4H4 Contractor's O & M Manual for manufacturer's literature that describes the setting and operation of torque switches.

The annunciator panel of Motor Control Center MCC-21 in Screen and Grit Building No. 2 contains an indicator light and alarm for high water level in Junction Chamber No. 2 (set for Elevation 10.00).

Scanner-Transmitter No. 21 in Motor Control Center MCC-21 in Screen and Grit Building No. 2 continuously scans and transmits the condition of the high water level alarm point in Junction Chamber No. 2 to the scanner-receiver alarm panel in the Process Control Room in the Main Pumping Station. Scanner-Transmitter No. 21 initiates a common alarm to the annunciator on the scanner-receiver alarm panel in the Process Control Room upon receipt of an alarm signal only indicating that an alarm condition in Junction Chamber No. 2 has occurred. The scanner-receiver alarm panel will also transmit the condition of all alarm points to the Computer Logger to be installed in the Process Control Room. Individual alarms will be displayed by the Computer Logger.

The output signals from the electronic transmitters for Meters MRC-1 and MRC-4 are transmitted to a summator adder in the Process Monitoring and Terminal Cabinet (PMTC). The output signal of this summator adder is transmitted to Indicator-Recorder G-3 on the PMTC which has a scale of 0 to 140 mgd and alarm contacts for flow rates of 25, 50, 75 and 100 mgd which will be transmitted to the computer

logger to be installed in the Process Control Room of the Main Pumping Station (see Figure III-OB-JC2-2). The output signal of this summator adder will also be transmitted to the computer logger.

The output signal from the electronic transmitter for Meter MRC-1 is also transmitted to a second summator adder in the PMTC to be added to a signal from Meter MS-1 (refer to the section headed "Junction Chamber and Meter Vault No. 1"). The output of this summator adder is transmitted to Indicator-Recorder G-1 on the PMTC which has a scale of 0 to 100 mgd (see Figure III-OB-JC2-2). The output signal of this summator adder will also be transmitted to the computer logger.

C. SUMP PUMP

The Sump Pumping Equipment in Meter Vault No. 2 consists of a sump pump and associated drive motor, designated MV2-SP-1, and associated control panel, cover plate and frame and sump level controls.

The sump pumping equipment is located in the northeast corner of Meter Vault No. 2.

For a complete discussion of the sump pumping equipment, operation and control refer to the section headed "Sump Pumping Equipment."

D. PLANT AIR (SEE FIGURE III-SU-UPS-1 THROUGH 3)

The plant air equipment in Junction Chamber and Meter Vault No. 2 consists of piping and fittings, shutoff valves, hose connections, in-line filters, pressure regulating valves, pressure gauges, and moisture traps.

Compressed air is supplied to the plant air equipment by the Plant Air System as described in the section headed "Main Pumping Station".

The plant air equipment supplies compressed air to the bubbler type liquid level system and to hose connections.

E. EFFLUENT WATER (SEE FIGURE III-SU-UPS-5 THROUGH 9)

The effluent water equipment in Meter Vault No. 2 consists of piping and fittings, shutoff valves, a flow indicator and needle valve, and a solenoid valve.

Effluent water is supplied to Meter Vault No. 2 by the General Purpose Effluent Water Pumps as described in the section headed "Filter Building and Nitrified Effluent Conduit."

The effluent water is used for Sump Pump MV2-SP-1 seal and lubrication water service.

F. PLANT WATER (SEE FIGURE III-SU-UPS-4)

The plant water equipment in Meter Vault No. 2 consists of piping and fittings and hose hydrants.

Plaut water is supplied to Meter Vault No. 2, by the Plant Water Equipment as described in the section headed "Main Pumping Station."

The plant water is used for hosing down the floor in Meter Vault No. 2.

G. VENTILATION EQUIPMENT: MV-S-1 AND 2

(1) DESCRIPTION

The purpose of the Meter Vault and Junction Chamber No. 2 ventilation system is to provide 100 percent outside air to Meter Vault No. 2.

The ventilation system in Meter Vault No. 2 consists of Supply Fans MV-S-1 and 2, inlet and exhaust louvers with manual dampers and associated ductwork.

The supply fans are centrifugal type, driven by 1-1/2 horsepower motors. Each fan supplies 3,000 cubic feet per minute of outside air to the meter vault.

(2) NORMAL OPERATION

Supply Fans MV-S-1 and 2 are provided with START-STOP push buttons, with a locking device for the STOP button, mounted at a convenient operating height near each fan. Each fan is also provided with START-STOP push buttons on Motor Control Center MCC-21 in Screen and Grit Building No. 2. The supply fans may be operated continuously or intermittently, as required.

(3) START-UP AND SHUTDOWN PROCEDURES

To start up or shut down a supply fan use the following procedures:

a. START-UP

- Close the circuit breaker for the supply fan located at Motor Control Center MCC-21, in Screen and Grit Building No. 2
- Push the START push button located on Motor Control Center MCC-21 or in Meter Vault No. 2

b. SHUTDOWN

- Push the STOP push button in Motor Control Center MCC-21 or in Meter Vault No 2.
- Engage the locking device on the STOP push button located in Meter Vault No. 2 if maintenance is to be performed on the equipment

(4) MONITORS

Supply Fans MV-S-1 and 2 are provided with red running lights on Motor Control Center MCC-21 in Screen and Grit Building No. 2.

H. POWER DISTRIBUTION SYSTEM

The power distribution system is shown in detail on the contract plans and various shop drawings. Refer to Table III-OB-JC2-1, Junction Chamber and Meter Vault No. 2 - Facility Equipment Summary, for contract plan and shop drawing numbers which pertain to the power distribution system.

OPERATION AND CONTROL
III-OB-98

III-OB-IPS INTERMEDIATE PUMPING STATION (013)

I. GENERAL

The Intermediate Pumping Station is a two-level structure located at the southeast corner of the HPO Reactors. This structure contains the following equipment and systems:

- Intermediate Pumping Station Wet Well
- Intermediate Sewage Pumping Equipment
- Sewage Sampling Equipment
- Hoisting Equipment
- Effluent Water
- Plant Air
- Ventilation
- Power Distribution System

The Intermediate Pumping Station is only in use when the Secondary Treatment Activated Sludge Process is in the parallel mode of operation and when operating the HPO system in the two-stage nitrification mode. During the parallel mode of operation, carbonaceous effluent flows into the Intermediate Pumping Station from the Carbonaceous Stage Final Sedimentation Tanks Nos. 1-6 by gravity through a 132-inch by 96-inch conduit between Final Sedimentation Tanks No. 4 and 5 and south of the HPO Reactors. Sewage discharged from the Intermediate Pumping Station flows to the Nitrification Stage HPO Reactors through a 96-inch by 192-inch channel (refer to Figures II-2A and II-2B, Plant Flow Diagram). During the series mode of operation, the carbonaceous effluent from Final Sedimentation Tanks 1-12 flows through Junction Chamber No. 5 and the Nitrification Pumping Station into the Diffused Air Reactors for nitrification treatment. The Intermediate Pumping Station will be shutdown during the series mode of operation.

Refer to Table III-OB-IPS-1, Intermediate Pumping Station - Facility Equipment Summary for control numbers, manufacturers, equipment capacities, and operation, maintenance, contract plan, and shop drawing references. Refer to the Contractor's O&M Manual for Manufacturer's Service Manuals pertaining to intermediate pumping equipment.

J. INTERMEDIATE PUMPING STATION WET WELL

(1) DESCRIPTION

The Intermediate Pumping Station Wet Well is a rectangular basin approximately 33.5 feet wide by 42.5 feet long with a liquid depth of 18 feet. The wet well has a volume of approximately 192,000 gallons (see Figure III-OB-IPS-1).

(2) DEWATERING

To dewater the Intermediate Pumping Station Wet Well, use the following procedure:

- Install stop logs in either of the stop log grooves in the portion of the Final Sedimentation Tanks Nos. 1-12 Effluent Channel located between Tanks Nos. 4 and 5 (See Figure III-FS-FST-1).

NOTE

When stop logs are installed as described above, effluent flow from the associated Final Sedimentation Tanks will flow over the secondary effluent control weir to the Post Aeration-Chlorination Tanks (See Figure III-FS-FST-1).

- Open dewatering valve number M-327 at the Main Pumping Station.

NOTE

The Intermediate Pumping Station Wet Well drains by gravity into the main drain, which empties into the Main Pumping Station Wet Well. The liquid level in the Main Pumping Station wet well is maintained at El. +3.50. To completely empty the Intermediate Pumping Station Wet Well, open Sluice Gate MP-SG-9 (influent gate to the dewatering sump) after the Intermediate Pumping Station Wet Well will no longer drain by gravity to the Main Pumping Station Wet Well. Then start-up the dewatering pump as described in the section headed "Main Pumping Station" to complete the dewatering procedure.

- After the Intermediate Pumping Station Wet Well has been completely dewatered, close dewatering valve number M-327.

K. INTERMEDIATE SEWAGE PUMPING EQUIPMENT: IP-ISP-1, 2, 3 AND 4

(1) DESCRIPTION

The intermediate sewage pumping equipment consists of four Intermediate Sewage Pumps, designated IP-ISP-1, 2, 3 and 4, associated drive motors and controls.

The Intermediate Sewage pumps are single-stage, vertical column, submerged, bottom suction-side discharge, axial flow propeller type pumps driven by 150 hp motors. The Intermediate Sewage Pumps, designated IP-ISP-1, 2 and 4, are driven by constant speed motors through infinitely variable speed drives of the eddy current coupling type. The Intermediate Sewage Pump, designated IP-ISP-3, is driven by a constant speed motor. Each intermediate sewage pump has a rated capacity of 40 mgd at a rated head of 15 feet at the maximum pump speed of 680 rpm (See Figures III-OB-IPS-2 and III-OB-IPS-3).

The Intermediate Sewage Pumps are operated and controlled from the Intermediate Sewage Pump Control Panel MCC-47. The Intermediate Sewage Pump Control Panel MCC-47 consists of eight cubicles which contain the following:

- Cubicle Number 1, designated "Main Control Panel" contains the Pump Programmer and Speed Controller, Scanner No. 47, and Bubbler Tube Liquid Level System Controls. The cubicle is provided with various front mounted indicators, push buttons, selector switches and like devices. Refer to the Contractor's O&M Manual for detailed drawings of the cubicle.

- Cubicles Nos. 2, 3 and 8, designated "Intermediate Sewage Pump No. 1 IP-ISP-1", "Intermediate Sewage Pump No. 2 IP-ISP-2" and "Intermediate Sewage Pump No. 4 IP-ISP-4", respectively, are each provided with various front mounted indicators, push buttons, selector switches and like devices. Refer to the Contractor's O&M Manual for detailed drawings of the cubicles.

- Cubicle No. 4, designated "Intermediate Sewage Pump No. 3 IP-ISP-3" is provided with various front mounted indicators, push buttons, selector switches and like devices. Refer to the Contractor's O&M Manual for detailed drawings of the cubicle.

- Cubicle No. 5 and No. 7 designated "Main Breaker Bus No. 2" and "Main Breaker Bus No. 1", respectively, are each provided with an ammeter and ammeter switch, a ground sensing relay and breaker handle with Kirk Key Interlocks (interlocked with Tie Breaker Cubicle No. 6, see below) to prevent more than two breakers from being on at the same time.

- Cubicle No. 6, designated "Tie Breaker", is provided with a 60-ampere breaker handle and tie breaker handle with Kirk Key Interlock (interlocked with Main Breaker Bus No. 1 and No. 2, see above) to prevent more than two breakers from being on at the same time.

(2) NORMAL OPERATION

The Intermediate Sewage Pumps are controlled from the Intermediate Sewage Pump Control Panel MCC-47. Under normal operation, when the controls on MCC-47 are positioned as described under "START-UP and SHUTDOWN PROCEDURES", the pumps will automatically start and stop in a predetermined sequence controlled by the Pump Programmer and Bubbler Tube Liquid Level System.

The program for automatic pump operations is arranged as follows:

- The Bubbler Tube Liquid Level System is preset to maintain the wet well liquid level at elevation plus 16.00 feet.

- Each Intermediate Sewage Pump is rated at 28,000 gpm or 40 mgd. One variable speed unit is required to be assigned for standby service.

- The firm pump capacity of the facility is 120 mgd and is provided by two variable speed pumping units operating at 100 percent speed (80 mgd) plus one constant speed pumping unit (40 mgd).

- Speeding up or slowing down of the variable speed units and starting and stopping of the constant speed unit is accomplished by the pump programmer in response to changes in sewage flow into

the wet well as reflected by variation of the preset wet well water level elevation. The response of the controls is such that the actual change in water level is very small and negligible.

- For sewage flows 40 mgd and less one variable speed unit will operate at 100 percent and lower speeds.

- For sewage flows from 40 mgd to 80 mgd two variable speed units will operate at 100 percent speed and lower speeds and equally share the pumping requirement.

- For sewage flows greater than 80 mgd and up to 120 mgd, one constant speed unit will operate at 40 mgd, and two variable speed units will operate at 100 percent and lower speeds equally sharing the pumping requirement between 80 and 120 mgd.

- In the event that any unit should fail to respond to the program signal, the system will move to the next unit in the program and the standby unit is arranged to be automatically included in the operation as the need arises.

- The control equipment is designed to provide the operations for the various flow ranges in a smooth and efficient manner and on a continuous basis. System controls are continuously responsive to the signal from the Bubbler Tube Liquid Level System equipment to insure that the variable speed pumps accurately operate to provide pumping for all variations in sewage flows as described above.

- The controls are arranged to shut down one pump at a time on falling set well liquid level, and the first pump to be shut down will always be the last pump started.

The function of the selector switches, discussed hereinbefore under "Description" for the various cubicles of MCC-47, is as follows:

- MANUAL-OFF-AUTO selector switches (located on Cubicles Nos. 2, 3, 4 and 8): When in the AUTO position, the associated pump will be operated and controlled by the pump programmer. In the OFF position the associated pump is shut down. In the MANUAL position the pump is operated and controlled locally by its associated START-STOP-EMERGENCY STOP push buttons.

- MANUAL-AUTO selector switches (located on Cubicles Nos. 2, 3, and 8): When in the AUTO position, the associated variable speed pump's speed will be controlled by the pump programmer. In the MANUAL position the associated variable speed pump's speed is controlled locally by its associated MANUAL SPEED CONTROL knob.

- VARIABLE SPEED PUMP SELECTOR SWITCH-VSS (located on Cubicle No. 1): The position of the selector switch determines the sequence in which the variable speed pumps will start. Table III-OB-IPS-2 shows the starting sequence for the various selector switch positions.

TABLE III-OB-IPS-2

PUMP START SEQUENCE

VSS POSITION	FIRST PUMP	SECOND PUMP	LAST PUMP
1	IP-ISP-1	IP-ISP-2	IP-ISP-4
2	IP-ISP-2	IP-ISP-4	IP-ISP-1
3	IP-ISP-4	IP-ISP-1	IP-ISP-2

- CONSTANT SPEED PUMP SELECTOR SWITCH-CSS (located on Cubicle No. 1): In position Number 1, the Constant Speed Pump, IP-ISP-3, will start as the third pump when required by increasing flow rate.

NOTE

The CSS switch is locked into position No. 1 and is, at present, provided to control the starting sequence of constant speed pumps to be installed in the future.

(3) START-UP AND SHUTDOWN PROCEDURES

To start-up and shutdown the intermediate sewage pumping equipment, use the following procedures:

a. START-UP

- Verify that the compressed air system is operating and open the compressed air supply line valves to the bubbler tube liquid level measuring system located in the Intermediate Pumping Station.

- Verify that the effluent water supply system is operating and open the valves required to supply lube water to the Intermediate Sewage Pumps.

- Close the circuit breakers on each of the Intermediate Sewage Pump cubicles.

- Select the variable speed pump sequence by turning the VSS selector switch to the desired position (see Table III-OB-IPS-2).

- Place the MANUAL-AUTO selector switches for Intermediate Sewage Pumps IP-ISP-1, 2 and 4 in the AUTO position on Cubicles Nos. 2, 3 and 8, respectively.

- Depress the RESET push buttons and place the MANUAL-OFF-AUTO selector switches in the AUTO position for Intermediate Sewage Pumps IP-ISP-1, 2, 3 and 4 on Cubicles Nos. 2, 3, 4 and 8, respectively.

b. NORMAL SHUTDOWN

- Place the MANUAL-OFF-AUTO selector switch on the associated intermediate sewage pump cubicle in the OFF position.

c. EMERGENCY SHUTDOWN

- Depress the EMERGENCY STOP push button either at the pump or on the associated Intermediate Sewage Pump Cubicle in MCC-47.

NOTE

If maintenance is to be performed on the intermediate sewage pump, depress the EMERGENCY STOP button at the unit and engage the locking device and open the circuit breaker on the associated Intermediate Sewage Pump Cubicle in MCC-47. Follow approved **Lockout/Tagout** procedures (See Chapter VI, Safety).

(4) ALTERNATE OPERATION

The intermediate sewage pumps may be operated manually. Under manual operation, the MANUAL-OFF-AUTO selector switch on each intermediate sewage pump cubicle is required to be placed in the MANUAL position. Each intermediate sewage pump may then be started or stopped using the START-STOP-EMERGENCY STOP push buttons either at the unit or on the associated pump cubicle. To adjust the speed of the variable speed intermediate sewage pumps under manual operation, place the MANUAL-AUTO switch on each variable speed intermediate sewage pump cubicle in the MANUAL position and adjust the pump speed by turning the MOTOR SPEED CONTROLLER knob. The pump speed is indicated on the tachometer speed indicator. Under manual operation, it is required that periodic adjustments be made to the number of pumps operating, and their speeds, based on changes in flow rate into the treatment plant to maintain a relatively constant wet well liquid level. Refer to Figure III-OB-IPS-2 and Figure III-OB-IPS-3 for pumping capacities of the constant and variable speed intermediate sewage pumps and Table III-OB-IPS-3 for recommended pump combinations at various influent flow rates.

NOTE

The total plant influent flow rate may be obtained from Indicator-Recorder G-2, Flow-Total Plant Influent, on the Process Monitoring and Terminal Cabinet in the Main Pumping Station.

TABLE III-OB-IPS-3 - MANUAL OPERATION PUMPING COMBINATIONS

INFLUENT FLOW RATE	CONSTANT SPEED PUMP	VARIABLE SPEED PUMPS OPERATING	APROX. SPEED EACH VARIABLE SPEED PUMP
20 mgd	Off	One	485 rpm
30 mgd	Off	One	585 rpm
40 mgd	Off	One	670 rpm
50 mgd	Off	Two	530 rpm
60 mgd	Off	Two	585 rpm
70 mgd	Off	Two	620 rpm
80 mgd	Off	Two	670 rpm
90 mgd	On	Two	530 rpm
100 mgd	On	Two	585 rpm
110 mgd	On	Two	620 rpm
120 mgd	On	Two	670 rpm

(5) MONITORS AND ALARMS

The Intermediate Pumping Station Wet Well liquid level is indicated on Cubicle No. 1 of MCC-47 and on Indicator G-49, Water Level-Intermediate Pumping Station, on the Process Monitoring and Terminal Cabinet in the Main Pumping Station.

The annunciator panel on Cubicle No. 1, Main Control Panel, of MCC-47 contains audible and visual indications for Wet Well High Water Level, Wet Well Low Water Level and Wet Well Low Level Shutdown alarms.

The annunciator panel on Cubicles Nos. 2, 3, 4 and 8 (Control Cubicles for IP-ISP-1, 2, 3 and 4, respectively) of MCC-47, each contain audible and visual indication for Lock Out Relay Trip, Fail to Start and Lube Water Low Pressure alarms.

The contacts which are provided to initiate the Lock Out Relay Trip alarm are as follows:

- Motor Overload Relays
- Phase Failure Phase Reversal Relay
- Ground Sensing Relay
- Eddy Current Coupling Air Temperature Relay (IP-ISP-1, 2, and 4 only)
- Winding Temperature Relay
- Excessive Vibration Relay - Pump
- Excessive Vibration Relay - Eddy Current Coupling (IP-ISP-1, 2 and 4 only)

- Low Lube Water Pressure Relay

The contact provided to initiate the Low Lube Water Pressure alarm is a pressure switch. The circuit includes a time delay relay to permit time for the seal water solenoid valve to open on start-up and to prevent nuisance pump shutdown because of momentary fluctuations in seal water pressure.

The local RTU continuously scans and transmits the condition of all alarm points in the Intermediate Pumping Station to the computer system in the Process Control Room in the Main Pumping Station.

Each intermediate sewage pump is provided with ON-OFF status indicating lights, an elapsed time meter, and current meters on Intermediate Sewage Pump Control Panel MCC-47. Each variable speed intermediate sewage pump is provided with a tachometer speed indicator on MCC-47.

L. SEWAGE SAMPLING EQUIPMENT: IP-SSP-1 AND PG-2

The sewage sampling equipment consists of a Sample Pump, designated IP-SSP-1, and a Composite Sampler Station, designated PG-2 (see Figure III-OB-IPS-4). The sample pump is provided with one suction connection into the Intermediate Pumping Station Wet Well. The suction connection permit samples to be taken at Elevation +5.00 (see Figure III-OB-IPS-4). The sample pump is required to operate continuously to provide flow to the composite sampler.

The composite sampler is arranged to take samples in proportion to sewage flow from a flow signal or at a fixed timer interval. For a complete discussion of the composite sampler operation and control, refer to the section headed "Sampling Equipment."

M. HOISTING EQUIPMENT: IP-JC-1

The jib crane has been taken out of service.

N. EFFLUENT WATER (SEE FIGURE III-SU-UPS-5 THROUGH 9)

The effluent water equipment in the Intermediate Pumping Station consists of piping and fittings, shutoff valves, flow indicators and needle valves, solenoid valves, pressure reducing valves, pressure gauges, and pressure switches.

Effluent water is supplied to the Intermediate Pumping Station by the general purpose effluent water pumps as described in the section headed "Filter Building and Nitrified Effluent Conduit."

The effluent water is used for pump lubrication water.

O. PLANT AIR (SEE FIGURE III-SU-UPS-1 THROUGH 3)

The plant air equipment in the Intermediate Pumping Station consists of piping and fittings, shutoff valves, moisture traps, hose fittings, supply line filters, pressure regulating valves and pressure gauges, a pressure regulating valve and a differential regulator, a rotameter, a solenoid valve, an air line lubricator, and a safety valve.

Compressed air is supplied to the Intermediate Pumping Station by the Plant Air System as described in the section headed "Main Pumping Station".

The plant air equipment supplies air to the liquid level bubbler tube, the sampler control panel and the hose connections.

P. VENTILATION : IP-REF-1

(1) DESCRIPTION

The ventilation system in the Intermediate Pumping Station consists of a Roof Exhaust Fan, designated IP-REF-1, a thermostat, and inlet louvers with manual dampers.

The roof exhaust fan is a centrifugal type fan and is driven by a 1 horsepower single speed motor. The fan exhausts air at a rate of 5020 cubic feet per minute from the Intermediate Pumping Station.

(2) NORMAL OPERATION

The roof exhaust fan is provided with a combination starter/circuit breaker cabinet with front mounted HAND-OFF-AUTO selector switch and running indicating light. The cabinet is mounted on the wall behind MCC-47. Under normal operation, when the selector switch is in the AUTO position, the fan will operate when the temperature in the Intermediate Pumping Station rises above the thermostat set point. The fan will operate until the temperature drops below the set point.

(3) START-UP AND SHUTDOWN PROCEDURES

To start-up or shutdown the ventilation equipment, use the following procedures:

a. START-UP

- Open the manual dampers on the intake louvers
- Close the circuit breaker in the combination starter/circuit breaker cabinet located on the wall behind MCC-47.
- Place the HAND-OFF-AUTO selector switch in the AUTO position
- Set the thermostat, located near the combination starter/circuit breaker cabinet, for the desired temperature in the Intermediate Pumping Station

b. SHUTDOWN

- Place the HAND-OFF-AUTO selector switch in the OFF position

NOTE

If maintenance is to be performed on the fan, open the circuit breaker in the combination starter/circuit breaker cabinet. Follow approved **Lockout/ Tagout** procedures (See Chapter VI, Safety).

(4) ALTERNATE OPERATION

The fan will run continuously when the HAND-OFF-AUTO selector switch is in the HAND position.

(5) MONITORS AND ALARMS

The fan is provided with an operational indicating light on the combination starter/circuit breaker cabinet.

Q. POWER DISTRIBUTION SYSTEM

The power distribution system is shown in detail on the contract plans and various shop drawings. Refer to Table III-OB-IPS-1, Intermediate Pumping Station - Facility Equipment Summary for contract plan and shop drawing numbers which pertain to the power distribution system.

III-OG-OGN & OST - OXYGEN GENERATION AND STORAGE EQUIPMENT (04I)

A. GENERAL

The oxygen generation and storage equipment is provided to furnish pure oxygen to the reactors for use in the activated sludge process. The oxygen generation and storage equipment consists of two 60-ton per day cryogenic oxygen generation plants and a 25,000 gallon (100-ton) Liquid Oxygen Storage Tank.

Each oxygen generation plant consists of an air compressor and cryogenic oxygen generation equipment. The limitation on system capacity is the output of the air compressors. The remaining equipment has sufficient capacity to produce up to 80 tons per day of oxygen per plant. The capacity of the compressors can be increased to produce 80 tons per day by installing larger impellers.

The liquid oxygen storage tank is provided with two liquid oxygen vaporizers and a truck fill stand.

For a complete description of the oxygen generation and storage equipment refer to the Division 4H23B Contractor's O & M Manual.

B. DESCRIPTION

The oxygen generation plants are capable of producing gaseous oxygen or a combination of gaseous oxygen and liquid oxygen. The liquid oxygen produced is stored in the liquid oxygen storage tank. Purity of the oxygen produced is 95 percent or greater.

Each plant has nominal capacity of 60 tons per day of gaseous oxygen. Gaseous oxygen production can be turned down to approximately 75 percent of the maximum capacity, for a range of gaseous oxygen production 42 to 60 tons per day. When the operator selects production of gaseous and liquid oxygen, each plant can produce a maximum of 42 tons per day of gaseous oxygen and 3 tons per day of liquid oxygen. These capacities can be increased in the future by the replacement of compressor impellers as noted above.

The liquid oxygen storage tank is provided to supply oxygen during periods of peak demand or at other times when required. Each liquid oxygen vaporizer has a capacity to vaporize 75 tons per day of liquid oxygen to gaseous oxygen.

The two oxygen generation plants may be operated individually or in parallel to supply the oxygen requirements of the reactors. Oxygen production is controlled automatically to follow the oxygen demand of the wastewater treatment process. If the demand for gaseous oxygen exceeds the production capacity of the generating plants, liquid oxygen in storage will automatically be vaporized to meet the demand.

C. PROCESS CONTROL

(1) Oxygen Generation

The oxygen generation equipment can be arranged to operate in the following modes and capacities:

- All gaseous oxygen production, at a full gas production rate per plant of 60 tons per day with an automatic turn down to 42 tons per day.

- Full gaseous oxygen and liquid oxygen production. Each plant can produce 42 tons per day of gaseous oxygen and 3 tons per day of liquid oxygen.
- Variable gaseous and liquid oxygen production. Gaseous oxygen production for each plant will turn down automatically from 42 to about 33 tons per day. Liquid production will vary, but should be about 3 tons per day at the turn down rate of 33 tons per day.

The mode of operation is determined on the basis of the rate of oxygen flow demanded by the wastewater in the reactors and the level in the liquid oxygen storage tanks.

(2) Oxygen Supply

The oxygen generation system responds automatically based on pressure to changes in the demand of the reactors for oxygen. On rising demand, air flow from the main compressors is automatically adjusted to increase oxygen production. Reactors No.1 and 2 are linked to the control of Plant No.1. Reactors 4, 5, and 6 are linked to the control of Plant No.2. Reactor No.3 can be linked to Plant No.1 or No.2 depending on mode of operation.

When maximum capacity of the oxygen generation plants is reached, and additional oxygen is required, liquid oxygen from the liquid oxygen storage tank is automatically vaporized to supplement the gaseous oxygen supply. Liquid oxygen is also vaporized if a demand exists and neither Oxygen Generation Plant is in operation.

On falling oxygen demand, the vaporized oxygen supply from liquid oxygen storage is automatically shut off when the demand drops to a level equal to or below the maximum gaseous oxygen generating capacity of the plants. The oxygen generation plant production is automatically reduced as demand decreases, until the minimum gaseous oxygen production capacity is reached. If demand is less than the minimum production capacity of the plant, the excess oxygen production is automatically vented to the atmosphere.

When the oxygen generation plant is producing both gaseous and liquid oxygen, liquid oxygen transfer to the liquid oxygen tank is cut off automatically when the tank becomes full. A truck fill connection is available which permits the liquid oxygen storage tank to be replenished by tank truck.

For a complete description of the operation and control of the oxygen generation system, refer to the Division 4H23B Contractor's O & M Manual.

D. MONITORS AND ALARMS

Each of the two oxygen generation plants has a main instrument panel for control, monitoring and alarm. The liquid oxygen storage facilities have an instrument panel which monitors the storage facilities. See the Division 4H23B Contractor's O & M Manual for a description of these panels and other instrumentation associated with the oxygen generation and storage equipment.

Continuous signals for the following items are transmitted from Scanner-Transmitter No. 11 in the main instrument panel for Oxygen Generation Plant No. 2 to terminals in the Process Monitoring and Terminal Cabinet (PMTC) in the Process Control Room in the Main Pumping Station. The following signals will be transmitted to the Supervisory Control and Data Acquisition (SCADA) System from the PMTC:

- Process oxygen gas flow for each Oxygen Generation Plant
- Process oxygen gas purity for each Oxygen Generation Plant
- Process oxygen gas pressure from each Oxygen generation plant
- Process oxygen gas vent valve open or closed, Oxygen Generation Plants Nos. 1 and 2
- Cold Box liquid oxygen level for each Oxygen Generation Plant
- Liquid oxygen from storage, valve open or closed
- Liquid Oxygen Storage Tank level
- Liquid Oxygen Storage Tank pressure

Scanner-Transmitter No. 11 in the main instrument panel for Oxygen Generation Plant No. 2, continuously scans and transmits the conditions of all alarm points at the oxygen generation and storage facilities to the scanner-receiver alarm panel in the Process Control Room in the Main Pumping Station. Scanner-Transmitter No. 11 initiates a common alarm to the annunciator on the scanner-receiver alarm panel in the Process Control Room upon receipt of an alarm signal only indicating that an alarm condition at the oxygen generation and storage facilities has occurred. The scanner-receiver alarm panel will also transmit the condition of all alarm points to the SCADA system in the Process Control Room. Individual alarms will be displayed by the SCADA system.

The following alarm points are transmitted for each of the oxygen generation plants:

- Main Air Compressor, High Vibration Alarm
- Main Air Compressor, Inlet Air Filter Dirty
- Main Air Compressor, Lube Oil System Alarm
- Main Air Compressor, Oil System Shutdown
- Main Air Compressor, High Bearing Temperature Alarm and Shutdown
- Main Air Compressor, Motor-Station Windings - High Temperature Alarm
- Main Air Compressor, Motor-Station Windings - High Temperature Alarm and Shutdown
- Main Air Compressor, Auxiliary Lube Oil Pump Running Alarm
- Main Air Compressor, High Air Temperature Alarm
- Main Air Compressor, Starter-Controller Tripped Alarm and Shutdown
- Cooling Water Supply Low Pressure Alarm and Shutdown
- Separator High Liquid Level Alarm
- Expansion Turbine, Lube Oil System Alarm and Shutdown
- Expansion Turbine, Pressure or Vibration Alarm and Shutdown
- Switch Valve Failure Alarm
- Air Separation Unit Alarm
- Air Separation Unit Shutdown

The following alarm points are transmitted for the liquid oxygen storage facilities:

- Liquid Oxygen Transfer Tank, High Liquid Level (Plant No. 1)
- Liquid Oxygen Transfer Tank, High Liquid Level (Plant No. 2)
- Liquid Oxygen Storage Tank High Pressure
- Liquid Oxygen Storage Tank, Low Liquid Level
- Liquid Oxygen Vaporizer, Low Outlet Temperature Alarm
- Liquid Oxygen Vaporizer, Cooling Water Supply Low Alarm
- Liquid Oxygen Vaporizer, Cooling Water Supply Temperature Low
- Oxygen Being Supplied to Process from Storage

E. SAFETY

Operation of the Oxygen Generation Plants and liquid oxygen storage facilities requires continuous attention to safety. The following plant features contribute to the requirement for added attention to safe operating procedures:

- Extremely low (cryogenic) temperature
- Atmosphere containing high concentrations of oxygen
- Oxygen deficient atmosphere
- Hearing protection required

Refer to the Division 4H23B Contractor's O & M Manual for a discussion of safety precautions.

F. EFFLUENT WATER (SEE FIGURES III-SU-UPS-5 THROUGH 9)

Effluent water is supplied to the oxygen generation and storage equipment by the general purpose effluent water pumps as described in Section III-FL-FB, Filter Buildings No. 1 and 2 and Junction Chamber No. 6. Effluent water is used for cooling water (refer to the Division 4H23B Contractor's O & M Manual). After use, the cooling water discharges into a 24-inch drain which flows by gravity into the Spent Cooling Water Return (SCWR) wet well located at the Main Pumping Station.

G. PLANT AIR (SEE FIGURES III-SU-UPS-1 THROUGH 3)

The plant air equipment at the oxygen generation and storage facilities consists of piping and fittings, shutoff valves and hose connections.

Compressed air is supplied to the plant air equipment by the plant air system as described in Section III-OB-MPS, Main Pumping Station.

The plant air equipment supplies compressed air to hose connections.

H. POWER DISTRIBUTION SYSTEM

Power is supplied to Oxygen Generation Plant No. 1 from Transformer T-1A-1 and to Oxygen Generation Plant No. 2 from Transformer T-1B-1. The transformers supply power at 4,160 volts.

Each oxygen generation plant has the following power distribution equipment:

- 4,160-volts, 3-phase, 60-hertz combination switchgear and motor controller
- Outdoor substation transformer rated 225 kva, 4,160 volts, 3-phase, 3-wire, delta primary 4 to 480/277 volts, 3-phase, 4-wire wye secondary, 60-hertz
- 480-volt Motor Control Center

Refer to Division 4H23B Contractor's O & M Manual for a complete description of the power distribution system.

III-PO-RSPS - RAW SEWAGE PUMPING STATION (001)

A. GENERAL

The Raw Sewage Pumping Station (RSPS) includes the following equipment:

- Main Pumps
- Plant Water Pumps
- Vacuum Equipment (Pumps, Tank)
- Knife Gate Valves
- Motorized Plug Check Valves
- Starting Air Compressor Equipment
- Hoisting Equipment
- Gas Detection Sensor
- Hydrogen Sulfide Analyzer
- Flow Meter
- Sump Pumps
- Heating, Ventilating and Air Conditioning Equipment

The Raw Sewage Pumping Station is located south of the Junction Chamber and Meter Vault No. 1. The station contains equipment for pumping influent, which reaches the plant by gravity flow, into Junction Chamber and Meter Vault No. 1. In addition, the station contains two of the engine generators and associated equipment which are part of the Power Generation Facilities.

Influent reaches the RSPS through a 54 inch gravity sewer. The influent flows to a wet well located beneath the RSPS. Four pumps are located on the lower level of the station and use suction to lift the flow from the wet well. The pumps are activated by a level control system. The flow is pumped through a common header into a 36 inch discharge pipe.

Refer to Section III-PO-PG Power Generation Facilities for the operation and maintenance of the Generators, Starting Air Compressors, Jacket Water Heat Exchangers, Auxiliary Heat Exchangers, Exhaust Silencers, Jacket Water Pumps, Plant Water Pumps, Chemical Feed Pumps, Outdoor Secondary Substation, and Ventilation Supply Fan which are located in the Raw Sewage Pumping Station.

Refer to Table III-PO-RSP-1, Raw Sewage Pumping Station - Facility Equipment Summary, for control numbers, manufacturer's names, equipment capacities, operation, maintenance, and contract plan and shop drawing references. Refer to the Contractor's O & M Manual for manufacturer's Service Manuals pertaining to equipment installed in these facilities. Figure III-PO-RSP-1 provides a schematic diagrams of the Raw Sewage Pumping Station.

B. MAIN PUMP

(1) DESCRIPTION

Influent reaches the RSPS through a 54 inch gravity sewer which is the only gravity main entering the treatment plant. The pumps and are shown schematically in Figure III-PO-RSP-1.

Each pump is an bottom suction, side discharge, non-clog vortex-type pump driven through a variable speed drive by a 30 or 75 horsepower motor. Pumps Nos. 1 and 4 have a rated capacity of 5750 gpm at 18 feet of TDH at maximum speed. Pumps Nos. 2 and 3 have a rated capacity of 11,100 gpm at 20 feet of TDH at maximum speed. Each pump is furnished with a HAND-OFF-AUTO switch which is located in the control room of the station.

(2) NORMAL OPERATION

During normal operation Pumps Nos. 2 and 4 are in the automatic mode. Pump No. 3 is currently out of service and its motor serves as a back-up to Pump No. 2. Pump No. 1 is normally not run because when it is running the flow meter is not as accurate due to vibration.

A vacuum system is used to prime the pumps. The vacuum system is composed of two air compressors mounted backwards and a tank which traps any liquid that is drawn into the air piping. The vacuum piping is mounted on the discharge piping and draws water from the wet well into the volute of the pump. When there is adequate pressure in the volute, the pump will start and the valve on the discharge pipe will open.

(3) START-UP AND SHUTDOWN PROCEDURES

To start up and shut down the main pumps, use the following procedures:

a. START-UP:

- Make sure the circuit breakers for the appropriate pumps are closed at MCC-64.
- Make sure the local disconnects for the pumps to be put in service are closed.
- Make sure the pumps to be placed in service are mechanically ready per manufacturer recommendations.
- Place the MANUAL-OFF-AUTO switch in the AUTO position for those pumps being put in service and make sure the corresponding run lamps are illuminated. The plant computer system will control the other start-up functions.

b. SHUTDOWN

- Turn the M-O-A switch in the control room to the OFF position for each pump to be shut down. The motorized valve will close and other functions will be shut down at the control panel.
- If maintenance is to be performed, open the local disconnect in MCC 64.

NOTE

If maintenance is to be performed on the pumps open the circuit breaker in MCC 64. Follow approved **Lockout/Tagout** procedures (See Chapter VI, Safety).

(4) ALTERNATIVE OPERATION

Manual operation is used if the plant computer system is not in operation.

a. START-UP:

- Make sure the M-O-A switch is in the MANUAL position.
- Make sure the valves in the discharge piping are in operating condition.
- Press the START button for the vacuum pump.
- Turn the pump on when pressure in the volute reaches 10 to 12 psi. The air actuated knife gate valve will open automatically.
- Adjust the pump rpms to maintain the wet well liquid level at -5.25 feet.

b. SHUTDOWN

- Turn the M-O-A switch in the control room to the OFF position for each pump to be shut down.
- If maintenance is to be performed, open the local disconnect in MCC 64.

When switching from manual to automatic operation it may be necessary to raise the wet well liquid level to ensure that the pumps stay in operation.

(5) MONITORS AND ALARMS

The pumps are provided with run lamps in MCC 64 which illuminate during pump operation.

The liquid level in the wet well is measured by a bubbler system. A high level signal is transmitted to the Main Pumping Station Control Room and an audible alarm sounds at the station.

C. VACUUM PUMPS

A vacuum system is used to prime the pumps. The vacuum system is composed of two air compressors mounted backwards and a tank which traps any liquid that is drawn into the air piping. The vacuum piping is mounted on the discharge piping and draws water from the wet well into the volute of the pump. When there is adequate pressure in the volute, the pump will start and the valve on the discharge pipe will open.

D. MOTORIZED PLUG CHECK VALVES

(1) DESCRIPTION

The Motorized Plug Check Valves use compressed air from the Starting Air Compressor Equipment to operate the valves. The valve operation is controlled at the instrumentation panel. When the Main Pumps are primed the controllers start the pump motors and open the valves. Knife gate valves are provided to permit isolation of each plug check valve for maintenance.

(3) START-UP AND SHUTDOWN PROCEDURES

Follow the procedure described below to start up and shut down the motorized plug check valves.

a. START-UP:

- Make sure the circuit breakers are closed at the MCC-65.
- Make sure the local disconnect is closed.
- Make sure the starting air compressor equipment is in service.
- Make sure each unit is mechanically ready in accordance with manufacturer recommendations.

The valves will operate when the pumps are placed in service.

b. SHUTDOWN:
- Turn the pump off at MCC-64.
- Open the local disconnect.

E. HOIST

A five ton capacity, motor operated monorail hoist is located in the upper level of the RSPS.

F. FLOW METER

Flow meter RSPS-PFM-1 is located on the discharge line near the exterior wall of the station. A signal from the meter is transmitted to the control panel in the control room. The flow meter is most accurate when Pump No. 1 is not in service and the discharge pipe is full.

G. SUMP PUMP

(1) DESCRIPTION

A 5.0 horsepower sump pump is provided to pump floor drainage from the lower level of the RSPS to the wet well.

(2) NORMAL OPERATION

The pump is operated from the control panel in the station. The panel is provided with an H-O-A switch. Normal operating conditions use the pumps in the automatic mode.

(3) START-UP AND SHUTDOWN PROCEDURES

To start-up and shutdown the sump pump, the following procedures should be followed:

(a) START-UP
- Close the breaker in MCC-65
- Place the H-O-A switch in the AUTO position

(b) SHUTDOWN
- Place the H-O-A switch in the OFF position
- Open the breaker in MCC-65

H. HEATING, VENTILATION AND AIR CONDITIONING EQUIPMENT

(1) DESCRIPTION

a. The ventilation system consists of an air supply fan for the wet well. The wet well is connected in turn to the odor control system at Junction Chamber and Meter Vault No. 1. The control room is cooled or heated by a roof top air conditioning unit.

(2) NORMAL OPERATION

a. START-UP:

1. The duct axial supply fan is powered from MCC-65. A HAND-OFF-AUTOMATIC switch is provided. The selector switch in maintained in the hand position so that the fan will run continuously.

2. The air conditioner is powered from MCC-65 with an ON/OFF switch. When the switch is placed in the ON position, the AC unit is energized through its controls. Continued operation will be dependent on a heat-cool thermostat. The cooling cycle should be controlled at approximately 78°F, and heating controlled at approximately 68 F. The cooling is supplied from a standard direct expansion air cooled system and the heating is supplied by an electric strip heater.

b. SHUTDOWN:

1. The air supply fan is stopped by placing the selector switch in MCC-65 in the OFF position.

2. The air conditioner is stopped by placing the switch in MCC-65 in the OFF position.

III-PO-PG POWER GENERATION (001)

A. GENERAL

The Power Generation facilities include the following equipment:

- Five Sludge Gas Fueled Engine Generator Units
- Sludge Gas Fuel Compressors and Filters
- Combustible Gas Detection System
- Sludge Gas Condensate Collection System
- Starting Air Compressor Equipment
- Jacket Water System
- Ventilation Equipment
- Modifications to Existing 13.2 KV Switchgear No.1
- Outdoor Secondary Substation No. 60
- Power Distribution

Sludge gas produced from the four (4) 75-foot diameter anaerobic digestion tanks with gas-holder covers, one (1) 95-foot diameter anaerobic digestion tank with floating cover and the two (2) 110-foot diameter anaerobic digestion tanks with floating covers (see III-PR-ADT) is used as fuel for two (2) engine generator units located in the Raw Sewage Pumping Station (see III-PO-RSPS) and the three (3) engine generators in the Generator Building (see III-PO-SPF). All engine generator units are operated in parallel with the Tampa Electric Company's (TECO) service to the Howard F. Curren AWT Plant via Outdoor Secondary Substation No. 60 (see Figure III-PO-PG-3). Electric power produced by the engine generators is all used on site and reduces the total amount of power which must be purchased from TECO. Heat from the generator unit is recovered by the jacket water system and used to heat the sludge in the anaerobic digestion tanks (see Figures III-PO-PG-1 and III-PO-PG-2). Refer to Section III-PR-ADT ANAEROBIC DIGESTION FACILITIES for descriptions of the operation and control of the anaerobic digestion tanks.

Refer to Table III-PO-PG-1, Power Generation Facilities - Facility Equipment Summary, for control members, manufacturers, equipment capacities, and operation, maintenance, contract plan, and shop drawing references. Refer to the Contractor's O & M Manuals for Manufacturer's Service Manuals pertaining to equipment associated with the Power Generation facilities.

B. ENGINE GENERATORS

(1) <u>DESCRIPTION</u>

The five (5) engine generator units are provided to generate electric power in parallel with TECO and thereby reduce the amount of power which must be purchased. The engine generator units use sludge gas as a fuel to produce power, waste heat is recovered by the jacket water system and used to heat the sludge in the anaerobic digestion tanks.

The engine generator equipment, designated RSPS-EG-1, RSPS-EG-2, GB-EG-3, GB-EG-4, and GB-EG-5, consist of the following major components:

- Five (5) Engines

- Five (5) Generators
- Five (5) Engine Lube Oil Systems
- Five (5) Engine Generator Control Panels (EGCP)
- Two (2) Engine Generator Monitoring Panels (EGMP)

Each engine is four-stroke cycle, 900 RPM (max.), overhead valve, 12 cylinder, naturally aspirated, sludge gas fueled engine. Each engine has a vibration isolated engine-mounted engine control subpanel with gauges for sludge gas fuel pressure, water temperature, oil pressure, oil temperature, and intake manifold vacuum, and a start control switch. Each engine is equipped with engine mounted dry-type combustion air cleaner, explosion relief covers on the crankcase, industrial type carburetor, and solid state ignition system. Refer to the Contractor's O & M Manual for a complete description of the engine.

Each generator is a 500 KW, 625 KVA, 0.80 power factor, 900 RPM (max.), 3-Phase, 60 Hertz, 480 Volt, generator, rated 80 Degree C rise, continuous duty above a 50 degree C rise, with Class F insulation, horizontal open dripproof, two-bearing, brushless synchronous, with 6 wire wye grounded windings and form wound stator coils. Each generator has generator winding temperature sensors, bearing temperature detectors and space heaters. Refer to the Contractor's O & M Manual for a complete description of the generators.

Each engine has an engine-driven lubricating oil pump which supplies lubrication oil under pressure to the engine's components. The lubricating oil is filtered with replaceable filter elements that are equipped with a high differential pressure alarm and filter bypass. Makeup lubrication oil is supplied manually. Lubrication oil is cooled through an intercooler with water supplied from the engine coolant system. An auxiliary electric-motor driven lubrication oil (L.O.) pump (and an electric lubrication oil heater) are provided to circulate and preheat the engine's lubrication oil when the engine-driven lubrication oil pump is not operating. The lubrication oil heater is arranged to operate only when the auxiliary L.O. pump is running and when the lubrication oil temperature drops below its preset value. Refer to the Contractor's O & M Manual for a complete description of the oil lubrication system.

The Engine Generator Control Panels (EGCP) and the Engine Generator Monitoring Panels (EGMP) are freestanding metal clad switch gear cabinets located in the Raw Sewage Pumping Station and the Generator Building. The control panels are provided with various front mounted indicators, push buttons, selector switches, and like devices for the operation, control and monitoring of the respective engines, generators, and oil lubrication system. Each EGMP is provided with various front mounted indicators, push buttons, and the like for monitoring the combined operation of the engine generators, jacket water system, sludge gas volume in storage, combustible gas detection system, air start system, and the Outside Secondary Substation No. 60. Refer to the Contractor's O & M Manual and subsequent descriptions contained hereinafter for a complete description of the EGCP's and the EGMP's.

Based upon the quantity of sludge gas available (see Section III-PR-ADT), the operator determines the number of engine generators to be put in service Operation of each engine generator is manually initiated via a "START/RUN" operation sequence at each selected local Engine Generator Control Panel which will

start the engine generators, initiate automatic synchronizing with TECO Power, and close the generator breaker to feed the generator's power into the plant power distribution system. The operation of the engine generator units and the alarm conditions are shown on the EGMP annunciator.

Each engine generator unit on line can manually be adjusted to increase or decrease plant load according to the gas volume present in storage, from a minimum of 250 KW to a maximum of 500 KW. Normal operation requires that the operator monitor the gas production and manually control the load of the generators. The minimum gas volume to be stored is 54,000 CF. If this volume is maintained 3 generator units can be run at a load of 400 KW. If storage increases at a rate of 5,000 CF/HR one unit can be increased to a load of 500KW. Generally, two units are running at any one time at loads between 400 KW and 500 KW.

If gas production in the anaerobic digestion tanks exceeds the amount that five (5) engine generator units at full load can utilize (72,000 CF), the gas level in the four (4) 75-foot diameter digesters with gas holder covers will increase. At this time the waste gas burners must be activated to flare off excess digesters gas (as described in Section III-PR-ADT, Anaerobic Digestion Facilities).

(2) NORMAL OPERATION

a. GENERAL

Based upon the quantity of sludge gas available, an operator determines the number of engine generators to be put into service. The operator will manually initiate a "START/RUN" operation sequence at each selected local Engine Generator Control Panel which will start the engine generator, adjust its speed and voltage, synchronize the engine generator with the utility and close the generator circuit breaker with the 480-volt 4000 amp generator bus in the Outdoor Secondary Switchgear No. 60. The operator will manually increase the load for each unit and vary the energy output based upon the volume of gas in storage up to a maximum set point load of 500 KW.

b. PRECONDITIONS

In order for an engine generator to be placed in service (on-line), the following preconditions must exist.

1. The individual engine and generator system must be clear of any fault conditions and the associated lockout relay on the EGCP (ANSI 86HR) must be reset. The functions and initial operational values of the fault conditions are listed hereinafter under Monitors and Alarms. Actuation of the engine generator warning circuits will result in an alarm condition and annunciation of the alarm condition on the EGCP and/or the EGMP with sounding of the alarm horn. The warning circuits must be reset after the condition causing the alarm has been cleared.

2. The generator output bus in 480-volt Outdoor Secondary Switchgear No. 60 must be clear of faults and must be energized by closing generator tie breaker.

3. The generator circuit breaker control switches on either the Engine Generator Control Panel or on the breaker within 480-volt Switchgear No. 60 must have been reset if either device has been tripped.

4. A prelubrication cycle, as described below, must have been completed and the engine lube oil pressure must register at a set value.

c. AUXILIARY EQUIPMENT

Each engine generator is provided with an auxiliary electric motor-driven lubrication oil pump. The pump may be operated in either a manual or automatic mode. A control selector switch and indication light is provided on each Engine Generator Control Panel. The auxiliary lube oil pump must operate for a set time and lube oil pressure must register at a set value before the engine generator will start. When the engine is running, an engine-driven oil pump will provide lube oil circulation, the oil pressure will rise to the operation set point, and the auxiliary pump will shut down.

In the manual mode, the auxiliary pump will run continuously until the engine generator unit is started. The permissive time and pressure cycles must be completed before the engine will start.

In the automatic mode, the auxiliary lube oil pump will start when a "START/RUN" signal is initiated and the associated engine will start after completion of the auxiliary lube oil time/pressure sequences. Each engine generator is also provided with an oil heater which cycles on thermostatic demand. The lube oil pumps will run in either manual or automatic mode when the oil heaters are on.

In the off mode the prelube pump and oil heater will not operate which will prevent engine start-up.

(3) START-UP AND SHUTDOWN PROCEDURES

To start-up and shutdown the engine generator units use the following procedures:

a. START-UP

- Check the engine generator unit components and fluids, such as coolant level, drive belts, air reservoirs, air cleaners, oil level, and the like as described in the Contractor's O & M Manual.
- Start the sludge gas fuel compressors as described in the subsection headed "Sludge Gas Fuel Supply Equipment".
- Make sure that the ventilation supply fans and the exhaust fans are operational as described in the subsection headed "Ventilation".
- Make sure the starting air compressor equipment is operational as described in the subsection headed "Starting Air Compressor Equipment".
- Make sure the jacket water system equipment is operational as described in the subsection headed "Jacket Water System".

- Correct any alarm conditions indicated on the EGCP or the EGMP and reset the EGCP and EGMP annunciators as described hereinafter under Monitors and Alarms.
- Select the circuit breaker control switch CS/T on the EGCP to "RESET". This indicates that the breaker between the engine generator unit and the 480-volt bus tied into the plant power is not locked out, is in the ready position, and will allow the EGCP logic to automatically tie the generator output into the plant power system when ready.
- Select the "Start Control Switch" CS located inside the EGCP to "AUTO". This will allow the engine generator unit to be controlled by the EGCP.
- Select the load control switch 43L/CS on the EGCP to "MANUAL". This will allow manual adjustment of the engine generator unit load output.
- Adjust the load potentiometer on the EGCP to the initial load desired.
- Select the local/remote selector switch 43/CS on the EGCP to "LOCAL". This will allow control of the engine generator unit from the EGCP.
- Select the auxiliary lube oil pump selector switch to "AUTO". automatic operation of the auxiliary lube oil pump will allow the EGCP to cycle the lube oil pumps on until preset values of oil temperature and pressure are reached before allowing start of the engine generator units.
- Select the engine generator control pushbutton to "START/RUN". The EGCP will automatically start the engine generator unit and bring it on-line with the 480-volt plant power system as described hereinbefore. The engine generator load output will be controlled by the manual load control potentiometer on the EGCP and can be adjusted by the operator.

b. SHUTDOWN

- Select the engine generator control pushbutton to "OFF/STOP" to allow the normal idle speed cool-off period and shutdown of the engine generator unit.

(4) <u>ALTERNATE OPERATION</u>

a. TEST/RUN FROM EGCP

In the test/run mode of operation controlled by the EGCP, the engine generator units operate as described hereinbefore under normal operation but cannot be tied into the 480-volt 4000 amp generator bus. All preconditions of operation must exist and interlocking alarms and control devices are functional with the exception that the generator output bus in the 480-volt switchgear No. 60 need not be energized. The operation sequence is described below.

1. Start-up

- Check the engine generator unit components and fluids, such as coolant level, drive belts, air reservoirs, air cleaners, oil level, and the like as described in the Contractor's O & M Manual.
- Start tbe sludge gas fuel compressors as described in the subsection headed "Sludge Gas Fuel Supply Equipment".

- Make sure that the ventilation supply fans and the exhaust fans are operational as described in the subsection headed "Ventilation".
- Make sure the starting air compressor equipment is operational as described in the subsection headed "Starting Air Compressor Equipment".
- Make sure the jacket water system equipment is operational as described in the subsection headed "Jacket Water System".
- Correct any alarm conditions indicated on the EGCP or the EGMP and reset the EGCP and EGMP annunciators as described hereinafter under Monitors and Alarms.
- The circuit breaker control switch CS/T on the EGCP should be selected to "RESET" or "LOCKOUT". If the 480-volt generator output bus in the Outdoor Switchgear No. 60 is not energized, but an engine generator unit is to be tested, the circuit breaker control switch should be selected to "LOCKOUT". If the 480-volt generator output bus in the Outdoor Switchgear No. 60 is energized, the circuit breaker control switch can be selected to "RESET".

NOTE

The operator may proceed directly from a test/run mode of operation to a normal operation as described hereinafter without shutdown and restart of the engine generator unit.

- Select the "Start Control Switch" CS located inside the EGCP to "AUTO". This will allow the engine generator unit to be controlled by the EGCP.
- Select the load control switch 43L/CS to either "AUTO" or "MANUAL" as described hereinbefore.
- Select the local/remote selector switch 43/CS on the EGCP to "LOCAL". This will allow control of the engine generator unit from the EGCP.
- Select the auxiliary lube oil pump selector switch to "AUTO". Automatic operation of the auxiliary lube oil pump will allow the EGCP to cycle the lube oil pumps on until preset values of oil temperature and pressure are reached before allowing start of the engine generator units.
- Select the engine generator control switch to "OFF/STOP". This selection will allow the engine generator unit to be run in the test mode.
- Select the test/run pushbutton to "TEST/RUN". The engine generator unit will automatically start, adjust speed and voltage, but will not synchronize and close "on-line" with the generator output bus in the 480-volt Outdoor Switchgear No. 60.

NOTE

The generator output voltage is maintained at a set value by a solid state voltage regulator in the EGCP. The voltage level

can be prematched to the utility manually during maintenance and testing by the voltage adjustment rheostat located on the EGCP door.

2. Shutdown
   - The engine generator unit is stopped from the test/run mode of operation by selecting the "STOP" pushbutton located in the EGCP that corresponds to the "TEST/RUN" pushbutton. The generator unit will run at idle speed for a cooldown period before stopping.

b. SHUTDOWN

The engine generator unit may be shutdown in other ways than those described hereinbefore.

- Should any safety shutdown condition occur, the EGCP will immediately shutdown the engine, energize the appropriate indicating light, activate the alarm circuit, and lockout the starting circuits and control system via the 86/HR hand-reset lockout relay located on the EGCP. For a description of alarm conditions see "Monitors and Alarms" described hereinafter.
- The engine generator unit will be stopped with a normal idle cool off period if the circuit breaker control switch CS/T is manually placed in the "TRIP" position. This breaker must then be placed in the "RESET" position before the engine can be restarted.

c. PRELUBRICATION SYSTEM

Each engine has been equipped with a prelube system which runs whenever the lube oil heater is required and for 30 seconds prior to any start-up to provide lubricating oil through the engine when the engine is not operating. The system shuts itself off after the engine has been started, regardless of manual or automatic mode operation.

The lube oil pump is operated from the EGCP by the manual-off-auto selector. In the manual mode the pump will run continuously and the lube oil heaters will cycle on thermostatic demand. The automatic mode of the pump will run whenever the lube oil thermostat requires lube oil heat and prior to every start. In the off mode the prelube pump and heaters will not operate which will prevent engine start-up. At the engine control subpanel is an on-off selector which will allow manual off override of the EGCP Manual/Off/Auto selector switch. Also, with the EGCP selector switch in auto, off, or manual and the engine control subpanel ON-OFF selector in ON, the pump can be run by pushing the test button located at the engine.

Normal operation of the prelubrication system is to select the EGCP manual/off/auto switch for "AUTO" and the engine control subpanel switch for "ON". This will allow automatic operation of the prelubrication pump when needed for circulation during an oil heating cycle and prior to engine start-up. If the EGCP selector switch is in the "MANUAL" position and the engine control

subpanel selector switch is in the "ON" position, the prelubrication pumps will run continuously and the oil heater will cycle on thermostatic demand.

(5) MONITORS AND ALARMS

a. ENGINE CONTROL SUBPANEL

Each engine generator unit is provided with an engine control subpanel. This engine control subpanel can be used to monitor the engine performance as well as provide local operational control as previously described. Interlocks and safety devices provided on the engine and generator are monitored by the EGCP for each engine generator unit and are described hereinafter. Refer to the Contractor's O & M Manual for a detailed description of the operation of the monitoring devices and interlocks supplied on each engine generator unit.

NOTE

Should the engine speed exceed the adjustable preset overspeed value, the electronic speed switch, located in the EGCP, will trip, opening the 86HR lockout relay on the EGCP. A second overspeed trip, located on engine Magneto Drive assembly is a back up. The overspeed on the engine must be manually reset as well as the 86HR relay before the engine generator can be restarted. The electronic speed switch resets itself.

NOTE

The annunciator (Ronan) must be reset after each fault is cleared, prior to the resetting of the 86HR relay.

b. ENGINE GENERATOR CONTROL PANEL

Each engine generator unit is provided with an engine generator control panel (EGCP). The EGCP is used to operate the engine generator unit (as described hereinbefore), to monitor the performance of the engine generator unit, and to alarm, annunciate the alarm condition, and stop the engine generator unit under certain operational conditions.

The EGCP includes plug-in relays, time-delay relays, control relays, and pneumatic timers. The circuit breaker and alarm circuits are operated from the 48 Volt DC battery power supply. The engine operating circuits and annunciators are operated from a 24 Volt DC battery supply. The generator metering and protective relaying circuits are supplied through fuses and transformers for personnel safety. The operation of the EGCP devices is described in the Contractor's O & M Manual. The operation of the devices is described below.

The generator output may be monitored on the EGCP with the panel-mounted voltmeter, ammeter, kilowattmeter, power factor meter, kilvarmeter, and frequency meter. The voltage and current of each phase of the generator can be individually monitored by selecting the desired phase with the

voltmeter and ammeter selector switches. The synchronization of the generator output with the 480-volt generator output bus in the Outdoor Secondary Switchgear No. 60 can be monitored with the panel-mounted synchroscope. The generator winding and bearing temperatures can be monitored with the generator winding and bearing temperature monitors. The exhaust gas temperature of each of the engine's twelve cylinders can be monitored by the engine exhaust pyrometer. The operation of the annunciator and indicating lights may be tested with the panel-mounted annunciator test pushbutton and the indicating light test pushbutton, respectively. Engine usage can be monitored with the panel-mounted hour meter and start counter.

Alarm conditions may be of two types: an alarm condition that notifies the operator of an out-of-range value but allows the engine generator unit to continue running, and an alarm condition that notifies the operator of an out-of-range value and also shuts the generator down. Those of special note are discussed below.

Actuation of any of the engine generator unit safety shutdown circuits will result in opening the circuit breaker between the generator and the 480-volt generator bus in the Outdoor Secondary Switchgear No. 60, immediately stopping of the engine, annunciation of the shutdown condition, and sounding of the audible alarm. Note that the lube oil pressure shutdown circuit and the excess vibration warning circuit are inoperative for the first 10 seconds of engine operation.

To reset the alarm conditions and restart the engine generator unit, the following procedure must be followed.

- Correct the fault condition.
- If the engine generator unit has stopped due to an overspeed condition, the electronic overspeed switch resets itself and overspeed on the engine must be manually reset.
- Reset the 86HR lockout relay switch.
- Reset the EGCP annunciator.

c. ENGINE GENERATOR MONITORING PANEL

The Engine Generator Monitoring Panel (EGMP) is used to monitor the individual engine generator units, the starting air system, the jacket water system, the raw sewage pumping station gas condensate tanks, the 24-volt and 48-volt station battery systems, the sludge gas volume stored in the anaerobic digesters, the Outdoor Secondary Substation No. 60, and the raw sewage pumping station combustible gas detector system. The EGMP controls the generator output load of all engine generator units on-line as described hereinbefore under "Description". The operation of the equipment monitored by the EGMP is described hereinafter under the appropriate subsections, and in the Contractor's O & M Manual.

The sludge gas volume in storage is monitored by the EGMP as described hereinbefore under "Description". The EGCP monitors the volume of sludge gas in storage and the number of engine generator units running. The EGMP annunciator indicates the appropriate warning if the sludge

gas in storage is less than the preset value indicating low storage volume for that number of engine generator units. The EGMP also indicates warning for high gas storage and operation of the waste gas burner (see Section III-PR-ADT, Anaerobic Digestion Facilities). The EGMP annunciates an alarm condition and automatically shuts down the engine generator units (with idle cool down period) when a low gas storage condition is reached.

Operation of the starting air compressor equipment is monitored by the EGMP. The operation of the engine generator starting air compressors is described in the Section headed "Starting Air Compressor Equipment." The EGMP monitors the air compressors and indicates an alarm condition if either compressor fails to start. The EGMP monitors the air pressure in the Starting Air Receiver tanks and indicates an alarm condition if either tank has a high or low air pressure.

The EGMP monitors the jacket water system. See the Section headed "Jacket Water System," for operation of the jacket water system. The EGMP annunciates an alarm condition upon failure of any of the jacket water pumps or upon a high return jacket water temperature.

The sludge gas condensate tanks are monitored by the EGMP. The operation of the sludge gas condensate tanks is described in the Section headed "Sludge Gas Fuel Supply Equipment." The EGMP annunciates an alarm condition if either of the condensate tanks is full.

The combustible gas sensors are monitored by the EGMP. The operation of the combustible gas sensors described in the Section headed "Sludge Gas Fuel Supply Equipment." If either gas sensor registers ambient gas levels in excess of its set alarm point, an alarm condition will be registered on the EGMP.

Each EGMP is equipped with a backup battery system for control of the panel during a power failure. Refer to the Contractor's O & M Manual for a detailed description of the battery systems. The EGMP annunciates an alarm condition if the battery systems have a low voltage condition.

The combined power output of all engine generator units is monitored on the EGMP. Generator output voltage, amperage, kilowatts, and power factor is monitored on the panel-mounted meters. The voltmeter selector switch and the ammeter selector switch are used to monitor each of the three power phases.

The power system electrical characteristics and the generator 480-volt output bus are monitored by the EGMP. See the Section headed "Outdoor Secondary Substation No. 60," for the operation of the substation. The EGMP will annunciate alarm conditions if the 480-volt, 4000-amp main breaker No. 1 or the generator bus tie breaker in the Outdoor Secondary Substation No. 60 have a fault condition.

C. SLUDGE GAS FUEL SUPPLY EQUIPMENT

(1) DESCRIPTION

The sludge gas fuel supply compressors are the rotary positive displacement type. The sludge gas fuel supply compressors and ancillary equipment are installed in the Sludge Control Building A (CBA) the Raw Sewage Pumping Station (RSPS), and the Generator Building (GB).

Sludge gas fuel supply equipment includes the five sludge gas fuel compressors, sludge gas filters, a sludge gas fuel meter, sludge gas condensate tanks, combustible gas sensors, and miscellaneous appurtenant devices which include pressure sensors, valves, pressure relief valves, safety control devices, and gauges. Refer to the Contractor's O & M Manual for detailed operation and maintenance information on this equipment.

Each of the sludge gas fuel compressors are rotary positive displacement type.

The two (2) sludge gas filters are each rated for 204 SCFM maximum sludge gas flow rate, with a 0.5 inch WC clean filter pressure loss at a 2-9 inch WC inlet pressure range.

Refer to Section III-PR-ADT, Anaerobic Digestion Facilities, for operation information for the sludge gas meter.

The operation of the sludge gas condensate tanks and sludge gas condensate collectors is described in Section III-PR-ADT, Anaerobic Digestion Facilities.

The operation of the combustible gas detection system is described in Section III-PR-ADT, Anaerobic Digestion Facilities.

(2) NORMAL OPERATION

Under normal operation, the sludge gas fuel compressors will be run whenever an engine generator unit is on-line. Sludge gas is withdrawn from the 8-inch sludge gas header that connects the four (4) 75-foot diameter anaerobic digesters with gas-holder covers, the one (1) 95-foot diameter anaerobic digester with floating cover and the two (2) 110-foot diameter anaerobic digestion tanks with floating covers. The sludge gas passes through the sludge gas filters that have replaceable filter elements. These filters remove sulfur (hydrogen sulfide) from the sludge gas to protect the downstream compressors, piping, and engine generator units from corrosion. Under normal operation, one SGFC is required to be operating for each engine generator. The compressed gas is discharged into a common discharge header piped to the engine generator units. The compressed fuel gas is metered by a venturi-type sludge gas meter. Moisture is removed via a sludge gas condensate collector (which discharges into the sludge gas condensate tanks). Bypass connections with pressure regulators are provided from the sludge gas fuel compressors discharge headers to the low pressure 8 inch sludge gas suction header. These bypass regulators are used when sludge gas fuel compressors are started with no engine generator units operating and to provide a constant flow of gas fuel to each running engine generator unit. The bypass regulators keep preset gas pressures at a constant rate passing unused gas back to the suction header.

(3) START-UP AND SHUTDOWN PROCEDURES

To start-up and shutdown the sludge gas fuel compressors, use the following procedures:

a. START-UP

- Open the inlet and outlet valves on the sludge gas fuel filters. The sludge gas fuel filter bypass valve (located on the Sludge Control Building A sludge gas fuel compressors' suction header line), which separates the fuel compressor suction line from the digester sludge gas header, should be closed.

NOTE

To bypass the filters in Sludge Control Building A, close the fuel filter isolation valves and open the bypass isolation valve.

- Open the suction and discharge isolation valves on the selected sludge gas fuel compressor.
- Open the isolation valves on the sludge gas fuel compressors' suction and discharge pressure switches.
- Open the four (4) isolation valves on the upstream and downstream sides of the pressure regulator located in the bypass piping connecting the sludge gas fuel compressor discharge header and sludge gas suction header.
- Open the two isolation valves on either side of the sludge gas fuel meter and close the sludge gas fuel meter bypass line isolation valve.

NOTE

To bypass the sludge gas fuel meter close the fuel meter isolation valves and open the bypass line isolation valve.

- Open the two isolation valves on either side of the sludge gas condensate collector and close the sludge gas condensate collector bypass line isolation valve.

NOTE

To bypass the sludge gas condensate collector, close the condensate collector isolation valves and open the bypass line isolation valve.

- Ascertain proper operation of the sludge gas condensate tanks in the raw sewage pumping station as described in Section III-PR-ADT, Anaerobic Digestion Facilities.
- Open the isolation valves on the sludge gas piping to the engine generator units.
- Close the circuit breaker at the Motor Control Center for the selected sludge gas fuel compressor.
- Place the ON/OFF/Lockout at the selected compressor in the ON position.

- Depress the START pushbutton.

b. SHUTDOWN

- Depress the OFF/Lockout pushbutton located at the selected sludge gas fuel compressor (or the STOP pushbutton located at motor control center).

NOTE

If maintenance is to be performed on the sludge gas fuel compressor, open the associated circuit breaker on the motor control center, place the ON-OFF pushbutton at the unit in the OFF position, engage the locking device, close the associated manually-operated suction and discharge isolation valves, and start-up the standby unit. Follow approved Lockout/Tagout procedures.

(4) MONITORS AND ALARMS

Each sludge gas fuel compressor is provided with a red indication light and an elapsed time meter, located on motor control center. Each sludge gas fuel compressor is provided with suction and discharge pressure switches, interlocked via auxiliary relays with the compressor motor starter, which will shut the fuel compressor down upon high discharge pressure and low inlet pressure conditions. Each fuel compressor is provided with an auxiliary relay in the motor starter circuit that will shut the fuel compressor down if the low gas storage alarm in motor control center is activated.

Each sludge gas fuel compressor is provided with auxiliary relays with annunciation on the Digestion Tank Monitoring Panel (DTMP). Audible and visible alarms for each sludge gas fuel compressor are provided as follows:

- High Discharge Pressure (alarm and shutdown)
- Low Inlet Pressure (alarm and shutdown)
- Compressor Failure (alarm and shutdown)

In addition, the sludge gas fuel meter is provided with a recorder located at the DTMP. The operation of the meter is described in Section III-PR-ADT, Anaerobic Digestion Facilities.

Each sludge gas fuel compressor is provided with an auxiliary relay that is interlocked with the EGMP in the raw sewage pumping station. The EGMP will show a red run indicating light for the sludge gas fuel compressors that are running. The engine generator units will not start and the preconditions on the EGMP will not be satisfied if no sludge gas fuel compressors are on-line.

The sludge gas condensate tanks in the raw sewage pumping station are monitored on the EGMP annunciator. An alarm condition will occur if the condensate tanks are full. The operation of the condensate tanks is described in Section III-PR-ADT, Anaerobic Digestion Facilities.

The Raw Sewage Pumping Station has combustible gas sensors. The sensors are provided with control and alarm modules in the EGMP. The operation of the combustible gas detection system is described in Section III-PR-ADT, Anaerobic Digestion Facilities.

D. STARTING AIR COMPRESSOR EQUIPMENT

(1) DESCRIPTION

The starting air compressor equipment is provided to automatically supply compressed air to the air starter motors of the engine generator units when they are started.

The starting air compressor equipment consists of five (5) starting air compressors, five (5) air receiver tanks, pressure relief valves, pressure switches, pressure gauges, pressure regulating valves, air piping and valves, and low pressure and high pressure controls and alarms.

(2) NORMAL OPERATION

The starting air compressors are controlled from Motor Control Center 47 or 61 (MCC-47 or MCC-61) and are monitored by the EGMP. The compressor's circuit breakers are normally left in the "on" position. Pressure switches on the air receiver tanks initiate compressor operation to maintain air receiver tank pressure at 200 psig.

When the air pressure in either of the receiver tanks drops to 145 psig, the associated compressor starts and operates until the receiver tank pressure has increased to 200 psig. It the associated compressor fails to start and the receiver tank pressure drops to 130 psig, a low pressure alarm and a compressor failure alarm will be activated on the EGMP annunciator. If such a compressor failure occurs, the remaining compressor may be used to charge the receiver tank by opening a manual valve on interconnecting piping. If a compressor fails to stop when the receiver tank pressure is 200 psig, and continues to increase pressure to 215 psig, a high pressure alarm and shutdown will be activated on the EGMP annunciator.

(3) START-UP AND SHUTDOWN PROCEDURES

To start up and shutdown the starting air equipment use the following procedures:

a. START-UP

- Open the isolation valve on the starting air compressor discharge lines and on the air receiver tank discharge lines to the engine generator units.
- Close the isolation valve on the bypass line connect in the two air receiver tank discharge lines.
- Open the isolation valves on the air pressure gauges and pressure switches at the compressor.
- Close the circuit breakers for each starting air compressor on the monitor control center.
- When the pressure in either receiver tank drops as described under Normal Operation the compressors will automatically start and stop.

b. SHUTDOWN

- Open the circuit breakers for each starting air compressor on monitor the motor control center.

NOTE

If maintenance is to be performed on an air compressor, close the manually-operated isolation valves necessary to isolate the equipment and open the circuit breaker at the motor control center. Opening of the bypass line isolation valve will allow an air compressor to be used to pressurized either of the receiver tanks for the engine generator units. Follow approved Lockout/Tagout procedures.

(4) MONITORS AND ALARMS

The operation of the starting air compressor equipment is monitored by the EGMP. High or low air receiver tank pressure is monitored and will cause an alarm condition on the EGMP annunciator. If either compressor fails to start, the EGMP will indicate an alarm condition for that compressor.

E. JACKET WATER SYSTEM

(1) DESCRIPTION

The jacket water system is provided to cool the engine generators by recovering waste heat, via engine mounted heat exchangers and to recover extra heat via exhaust gas heat recovery silencers, and to supply the recovered heat to the anaerobic digestion process sludge heat exchangers (refer to Section III-PR-ADT). Also when all the engine generators are shutdown, and the dual fuel water heaters are operating. the jacket water system is provided to transfer heat from the dual fuel water heaters to the anaerobic digestion process sludge heat exchangers (refer to Section III-PR-ADT and Figures III-PO-PG-1 and III-PO-PG-2).

Additionally, the jacket water system includes a separate effluent water auxiliary engine generator cooling loop to remove and dispose of waste heat not required by the process.

The jacket water system includes five (5) engine mounted auxiliary heat exchangers, five (5) engine mounted jacket water heat exchangers, two (2) residential type silencers, three (3) exhaust gas heat recover silencers, five (5) jacket water pumps, two (2) chemical feed pump (RSPS-CFP-1 and GB-CFP-1), five (5) expansion water tanks, automatic air vents, pressure relief valves, motor operated control valves, manually operated isolation valves, temperature sensors, indicating temperature panel meters, and piping. This equipment is located in the Raw Sewage Pumping Station (RSPS) and Generator Building (GB) Control Building C (CBC) and Control Building A (CBA). (See Figures III-PO-PG-1 and III-PO-PG-2, Jacket Water Diagram).

The jacket water heat exchanger and auxiliary heat exchanger are the shell and tube type, water-to-water heat exchangers with removable curves and leanable tubes. The heat exchangers are mounted on the engine generators.

The exhaust gas heat recovery silencers are annular jacket (tubeless) type heat exchanger/silencers. The units may be operated dry (i.e. with no water in the annular jacket) when the exhaust heat is not required by the process. The silencers for engine generators Nos. 1 and 2 are residential type silencers.

The five jacket water pumps are single stage, single suction, frame-mounted centrifugal pumps driven by a constant-speed electric motor. Each pump circulates jacket water at a rate of 300 gpm at a rated pumping head of 50 feet.

The chemical feed pump is used to add corrosion inhibiting chemicals to the jacket water system. The chemical feed pump is a positive displacement chemical metering pump rated at 31 gpd at 150 psig.

The jacket water system expansion tank is provided to allow expansion of the heated jacket water. The expansion tank is the air cushion type rated up to 125 PSI.

The jacket water system is provided with an automatic air separator to remove air from the system using a float activated valve.

Over pressure protection of the exhaust gas heat recovery silencers is provided by pressure relief valves. The pressure relief valves are the hydraulically-operated pilot controlled diaphragm type with a resilient disk and removable seat.

Jacket water system componeuts can be isolated by using the manually-operated valves shown in Figures III-PO-PG-1 and III-PO-PG-2, Jacket Water Diagram.

Automatic temperature control of the jacket water system is provided by motor-operated valves that are controlled by the temperature of the jacket water as sensed by temperature probes. Cooled jacket water temperature is measured by the temperature gauge located in the jacket water piping on the suction side of the jacket water pumps. The cooled jacket water temperature is indicated by an indicator located on the EGMP. An auxiliary relay in the temperature monitor circuit will provide a high temperature alarm if the jacket water returning from the sludge heat exchangers is too hot. The temperature of the heated jacket water is sensed by a temperature probe located in the jacket water piping on the discharge side of each of the engine generator units' jacket water heat exchangers and exhaust heat recovery silencer. The temperature of the heated jacket water is indicated by indicators located on the EGMP. The temperature probes operate the motor-operated valves controlling flow to the jacket water heat exchangers. If the temperature of the heated jacket water leaving the engines is above the adjustable set point (initially 160 degrees Fahrenheit) the motor operated valve on the inlet to the generator will close and the motor operated valve in the bypass line will open. When the temperature drops below 150 degrees Fahrenheit the valves will reverse positions.

If the temperature of the engine's coolant returning from an auxiliary heat exchanger is above the adjustable set point (155 - 158 degrees Fahrenheit) the motor operated valve on the effluent water supply will open. The effluent water is then used to remove the excess heat and is dumped to the plant outfall if chlorinated effluent is used or to the RSPS wet well if non-chlorinated effluent is used.

(2) NORMAL OPERATION

The operation of the dual-fuel water heaters and sludge heat exchangers is described in Section III-PR-ADT, Anaerobic Digestion Facilities. Heated jacket water is pumped to this equipment (located in Sludge Control Buildings A, B, and C) and is returned through the underground jacket water piping.

Cooled jacket water is returned from the heat exchangers in the sludge control buildings through 8-inch jacket water piping that is manifolded into the jacket water pump suction header (see Figure III-PO-PG-1 and III-PO-PG-2).

The jacket water pumps are normally run continuously with one pump dedicated to each engine generator that is operating.

Under normal operation, recovery of the exhaust gas heat is not required by the process. However, under certain circumstances, (for example, one engine out of service for a long time or prolonged cold weather) it may be necessary to recover the exhaust gas heat for the process.

CAUTION

When the exhaust gas heat recovery silencers are to be used, shutdown the engine generator equipment and allow the silencers to cool before filling with water.

At all times when the exhaust gas heat recovery silencers are filled with water, the inlet and outlet valves must be open and jacket water pumps operating. Exhaust gas temperature exceed 1000 degrees Fahrenheit and WILL convert water to steam rapidly if continuous flow is not maintained.

When recovery of exhaust gas heat is no longer required the silencers must be drained.

Each of the exhaust gas heat recovery silencers is equipped with a pressure relief valve to relieve the jacket water pressure if it exceeds the valve setting (45 psig). The common discharge line for the two engine generator units' heated jacket water line is equipped with an automatic air vent with bypass piping. This air vent will release gas (air) from the heated jacket water as it accumulates.

Heated jacket water is circulated to the sludge heat exchangers as described in Section III-PR-ADT, Anaerobic Digestion Facilities. If the temperature of the jacket water returned from the sludge heat

exchangers exceeds the preset limit of cooled jacket water temperature probe (located at the jacket water pump suction piping) the probe signal will actuate an alarm on the EGMP.

The jacket water pump suction piping is equipped with an automatic jacket water make-up water line. A solenoid valve, controlled by a pressure relay on the suction line, will open and allow plant water to enter the jacket water piping if the jacket water pump suction pressure drops below its preset value.

(3) START-UP AND SHUTDOWN PROCEDURES

To start-up and shutdown the jacket water system, use the following procedures:

a. START-UP

- Open the manually-operated isolation valves on the jacket water pumps, jacket water feed line, the expansion water tank, the two jacket water pump suction and discharge lines, the appropriate jacket water pump discharge header line, jacket water inlet and outlet, the auxiliary heat exchanger effluent inlet, and the automatic air vent inlet and outlet.

NOTE

To bypass the automatic air vent, position the two-way outlet valve to allow jacket water flow through the bypass in and close the automatic air vent inlet line.

- Turn on panel breakers to energize motor operated valves.
- Close the circuit breaker at Motor Control Center (MCC-47, MCC-47A, or MCC-61) for the selected jacket water pumps.
- Depress the ON pushbutton located at the selected jacket water pump (or the START pushbutton located at the motor control center).
- If the chemical feed pump (RSPS-CFR-1) is to be used, open the pump discharge line isolation valve, turn the appropriate panel breaker to ON, and start the chemical pump.

NOTE

Refer to the CAUTION under normal operation regarding use of Exhaust Gas Heat Recovery Silencers.

b. SHUTDOWN

- Depress the OFF pushbutton located at the selected jacket water pump (or the STOP pushbutton located at the motor control center).

NOTE

If maintenance is to be performed on the jacket water pumps, open the associated circuit breaker on the motor control center, place the ON-OFF pushbutton at the unit in the OFF position, engage the locking device, close the

associated manually operated suction and discharge isolation valves, and start-up the standby unit. Follow approved Lockout/Tagout procedures.

(4) MONITORS AND ALARMS

Each jacket water pump is provided with a red run indication light and an elapsed time meter located at the motor control center. Each jacket water pump is provided with suction and discharge pressure gauges.

Each jacket water pump motor starter is provided with an auxiliary relay with annunciation of "Jacket Water Pump Failure" on the EGMP.

The temperature probes on the heat exchanger discharge lines are provided with Heated Jacket Water Temperature (Supply) indicators in the EGMP.

The temperature probe on the cooled jacket water return from the digester control buildings is provided with an indicator in the EGMP for Heated Jacket Water Temperature (Return). In addition, temperature probe circuit has an auxiliary relay which will annunciate an alarm condition on the EGMP if the return jacket water temperature is higher than the preset value.

F. VENTILATION

(1) DESCRIPTION

The ventilation system includes eight (8) exhaust fans and two (2) air supply fans located in the Raw Sewage Pumping Station (RSPS) and Generator Building (GB).

(2) NORMAL OPERATION

Under normal operation the exhaust and supply fans in the RSPS and GB operate continuously.

(3) START-UP AND SHUTDOWN PROCEDURES

To start-up and shutdown the ventilation system, use the following procedures:

a. START-UP

- Close the circuit breaker for the selected fan on the motor control center (MCC-46, MCC-47 or MCC-61).
- Place the ON/OFF/LOCKOUT switch at the unit in the ON position.
- Depress the START pushbutton.

b. SHUTDOWN

- Depress the OFF pushbutton at the selected fan (or depress the STOP pushbutton at the motor control center).

NOTE

If maintenance is to be performed on a ventilation fan, open the circuit breaker on motor control center, place the ON-OFF switch at the fan in the OFF position, and engage the locking device. Follow approved Lockout/Tagout procedures.

(4) MONITORS

Each fan is equipped with a red run indication light on the motor control center.

G. 13.2 KV SWITCHGEAR NO.1

(1) DESCRIPTION

The 13.2 KV Outdoor Switchgear No. 1 is provided to distribute electrical power to the plant. The operation of this equipment is described in Section III-ES-SWG, 13.2 KV Metalclad Switchgear.

The original 13.2 KV outdoor switchgear was modified to allow cogeneration of electrical power with Tampa Electric Company. These modifications include providing a 15 KV class drawout air circuit breaker, instrument transformers, protective relays, instruments, devices, and wiring in the existing 13.2 KV Metalclad Outdoor Switchgear No. 1. These modifications provide a 13.2 KV feeder and transformer protection for the new Outdoor Secondary Substation No. 60.

Cubicles 10 and 11 of Section A, and cubicles 12 and 13 of Section B of the existing 13.2 KV Metalclad Outdoor Switchgear No. 1 provide reverse power and dead bus interlock protective relaying.

Power circuit breakers 1-52-6A and 1-52-6B are 1200 ampere, 15 KV Class, air-magnetic breakers rated at 500 mva at 13,200 volts. The breakers are operated by 125-volt dc closing stored energy mechanisms and trip coils.

Instrument transformers, control switches, protective relays, instruments, and wiring are provided in Cubicle No. 3 for power circuit breaker 1-52-6A and Cubicle No. 20 for power circuit breaker 1-52-6B to provide ground fault sensing (ANSI 50G), amperage monitoring, voltage metering, over current protection and over current instantaneous groundfault protection (ANSI 51/50), circuit breaker control and circuit breaker lockout, and indicating lights to identify the circuit breaker status.

Cubicle 10, 11, 12 and 13 of the existing 13.2 KV Outdoor Metalclad Switchgear No. 1 are provided with instrument transformers, wiring, a Standby Turbine Generator start auxiliary relay, and reverse power and dead bus interlock protection (ANSI 62).

A annunciator is provided on the Process Control Console located in the Main Pumping Station. Tbe reverse power interlock (ANSI 62) for breakers 1-52-1 and 1-52-2 is provided with alarm functions on this annunciator.

(2) NORMAL OPERATION

Normal operation of power circuit breakers in the 13.2 KV Outdoor Switchgear No. 1 is to manually set the circuit breaker switch in the ON position. The power circuit breaker has electro-mechanical interlocks which will trip and lockout the circuit breaker under certain conditions.

If undervoltage is detected on the 13.2 KV feeder from the 13.2 KV Outdoor Switchgear No. 1 to the Outdoor Secondary Switchgear No. 60, the power circuit breaker will be opened by the ANSI 27 undervoltage interlock. If instantaneous or time overcurrent is detected in the 13.2 KV feeder, the ANSI 50/51 and 50G interlocks will cause the power circuit breaker to open. The ANSI 86 lockout may be engaged which will trip and lockout the power circuit breaker. Once fault conditions have been cleared and the lockout has been reset, the circuit breaker control switch may be reset and closed. Note that the power circuit breakers may not be closed if the 13.2 KV feeder line to the Outdoor Secondary Substation No. 60 is energized (i.e. the 600 amp 13.2 KV disconnect switch that isolates the 13.2 KV/480 volt transformer at Outdoor Secondary Substation No. 60 from the 13.2 KV feed must be open, the 4000 amp 480V main breaker at the Outdoor Secondary Substation No. 60 must be open, and/or the engine generator units must be off).

Section A and Section B of the 13.2 KV Metalclad Outdoor Switchgear No. 1 have interlocks which open the main power breaker in case of reverse power on the 13.2 KV, 2000 amp breakers, to prevent possible damage to the TECO equipment and personnel.

(3) MONITORS AND ALARMS

The 1-52-6A and 1-52-6B power circuit breaker are provided with a breaker control switches with indicating lights that show the CLOSED/TRIP/RESET status of the breaker. The power circuit breaker panel is also provided with a wattmeter, ammeter with ammeter swtich to monitor the wattage and phase amperage of the 13.2 KV feeder to the Outdoor Secondary Substation No. 60.

The Section A and Section B main power breakers in the 13.2 KV Outdoor Metalclad Switchgear have been provided with watthour demand meters, amperage meter with phase selector switch, voltmeters, varmeters, wattmeters, and breaker control switches with status indicating lights. Reverse power trip alarm annunciation is provided for these power breakers in the Process Control Console located in the Main Pumping Station.

H. OUTDOOR SECONDARY SUBSTATION NO. 60

(1) DESCRIPTION

The Outdoor Secondary Substation No. 60 is located adjacent to the Raw Sewage Pumping Station and consists of the following components, mounted on a concrete pad.

- Incoming 13.2 KV, 3 phase, 60 Hertz outdoor enclosure line section.
- Liquid insulated outdoor secondary unit substation transformer; 13.2 KV delta primary to 480/277 volts wye secondary, grounded neutral, designated T-6A-1.

- A protected aisle, outdoor, secondary low voltage, draw-out type air circuit breaker switchgear section designated 480-volt Switchgear No. 60.

The incoming 13.2 KV line section includes a 15 KV class, 600 ampere manually operated load break interrupter switch in an outdoor enclosure and all appurtenances including a bus bar transition cubicle.

The secondary unit substation transformer is a mineral-oil filled transformer as described hereinbefore.

The 480-volt Switchgear No. 60 is the protected aisle type that allows removal of the circuit breakers without exposure to the elements. The switchgear circuit breakers are the 600-volt class, drawout, power air circuit breaker type with solid state sensor/trip elements. All breakers have a 4-position indicator "connected", "test", "disconnected", and "remove". The circuit breakers have electrically operated (48-volt DC) close and trip functions, control selector switches with position indication, an operation counter, and an Overcurrent Trip Switch (OTS) and manual reset (where shown). The operation of the individual circuit breakers will be described hereinafter.

The 480-volt Switchgear No. 60 also is provided with instrument transformers, indicating instruments, analog signal transducers, control switches, indicating lights, protective relays, auxiliary relays, and all other devices as described herein. Refer to the Contractor's O & M Manual for a detailed description of the substation components. Refer to Figure III-PO-PG-3, Outdoor Secondary Substation No. 60 One Line Diagram.

Outdoor Secondary Switchgear No. 60 compartments Cubicle A, Auxiliary Cubicle B, and main breaker Cubicle C contain the 480-volt transformer bus transition and the main breaker No. 1. This main breaker isolates the 480-volt switchgear components from the 13.2 KV main feeder line. The main breaker is provided with interlocking protective devices and monitoring devices. Main Breaker No. 1 is provided with a CLOSE/TRIP/RESET control switch with indicating lights.

Outdoor Secondary Substation No. 60 cubicle I contains identical generator breakers No. 7, No. 8, No. 9, No. 10 and No. 11. The generator breakers are similar, removable 1600 ampere, power circuit breakers with current limiting fuses.

(2) NORMAL OPERATION

Under normal operation the Outdoor Secondary Switchgear No. 60 will operate automatically. After initially manually resetting the ANSI 86R breaker lockout switches for the main breaker No. 1 and the generator tie breaker No. 6, the breaker control switches may be reset and closed.

NOTE

The engine generators cannot be operated as prime power sources. Either TECO or the standby generators must be on-line before any engine generator unit can be connected to the system. System interlocks do not allow:

- Breaker 1-52-6A and 1-52-6B (in Outdoor 13.2 KV Metalclad Switchgear No. 1) to be closed into an energized line from T-6A-1.
- The main breaker No. 1 in the Outdoor Secondary Switchgear No. 60 to be closed if the main 480-volt 4000 amp bus is energized.
- The generator bus tie breaker to be closed if the main 480-volt 4000 amp bus is not energized.
- The generator breakers to be closed if the 480-volt 4000 amp generator bus is not energized.

The sequence of operating the circuit breakers in the Outdoor Secondary Switchgear No. 60 should be as follows (starting with all circuit breakers in the switchgear reset):

- Close the main circuit breaker No. 1, energizing the 480-volt 4000 amp main bus.
- Close the generator tie circuit breaker No. 6, energizing the 480-volt 4000 amp generator bus.
- Close the generator breakers, energizing the 480-volt 1600 amp generator output line.

For normal shutdown of the switchgear this sequence should be reversed.

(3) ALTERNATE OPERATION

a. RECLOSURE CYCLES

When a reclosure cycle occurs on the TECO system, the ANSO 81 protective device at the main breaker No. 1 cubicle will automatically cause the generator tie breaker, and subsequently the generator breakers, to trip and lockout, initiating an automatic shutdown cycle for all on-line generator units. When the system has stabilized, the generator bus tie breaker may be reset, allowing reset of the generator breakers and start-up of the engine generator units.

b. POWER FAILURE

When there is a total TECO power failure, the ANSI 81 relay will again sense under frequency, initiating the same sequence described when reclosure occurs. After the standby turbine generators are on-line, the generator bus tie breaker may be reset and reclosed, the generator breakers reset and reclosed, and the engine generator units restarted.

(4) MONITORS AND ALARMS

The following monitors and interlocking protective devices are provided on the Outdoor Secondary Switchgear No. 60:

a. MAIN BREAKER NO. 1

- Zero Sequence Ground Fault (overvoltage) relay ANSI 59G. This relay is interlocked with the ANSI 86HR handset lockout relay and will cause it to trip if overvoltage is detected on the incoming 13.2 KV feeder line.
- Undervoltage Relay ANSI 27/1. This relay is interlocked with auxiliary relay ANSI 27/X1. If undervoltage is detected on the 480V 4000 amp main bus the relay will cause the auxiliary relay ANSI 27/X1 to operate.

- Auxiliary Relay ANSI 27/X1. This relay will operated if it receives a trip signal from the previously described ANSI 27 undervoltage relay, causing the main breaker No. 1 and generator tie bus breaker No. 6 to trip.
- High Speed Static Underfrequency Relay ANSI 81. This relay is interlocked with the generator bus tie breaker No. 6. If an underfrequency condition is detected on the 480-volt 4000 amp main bus, this relay will cause the generator bus tie breaker to trip.
- Phase overcurrent Fault/Ground Fault Relay ANSI 51/51G. This relay is interlocked with the ANSI 86 HR handset lockout relay and will cause this relay to operate (causing subsequent trip of main breaker No. 1 and generator tie bus breaker No. 6) when overcurrent or ground fault is detected on the 480-volt 4000 amp main bus.
- ANSI 86HR Lockout Relay. This relay will trip if the ANSI protective relays previously described (ANSI 59G, and ANSI 51/51G) detect a fault condition and operate, thereby causing the main breaker No. 1 and the generator bus tie breaker No. 6 to trip.
- In addition to its interlocking protective relays, main breaker No. 1 is provided with a CLOSE/TRIP/RESET control switch with indicating lights. The total wattage and amperage and voltage of each phase of the 480-volt 4000 amp main bus can be monitored using panel door mounted instruments and selector switches.

b. DISTRIBUTION BREAKERS 2, 3, 4, AND 5

- Instantaneous phase overcurrent and time delay phase overcurrent protection of the 800 amp feeders to the distribution panels is provided by ANSI 50/51 protective devices.
- Ground fault protection of the 800 amp feeders to the distribution panels is provided by protective device ANSI 50G.
- The circuit breaker is equipped with a breaker control switch CS with CLOSE/TRIP functions and indicating lights. Amperage of each phase of the distribution panel feeder can be monitored with a panel-mounted ammeter and phase selector switch.

c. GENERATOR BUS TIE BREAKER (No. 6)

- Time phase overcurrents and ground fault protective relay ANSI 51/51G. This protective relay will operate when phase overcurrent or ground fault is detected in the 480 volt 4000 amp generator bus, causing the ANSI 86 HR lockout relay to operate (the ANSI 86HR relay will subsequently cause the generator bus tie breaker and all generator breakers to trip). The alarm trip condition will be annunciated on the EGMP.

- The ANSI 46 protective relay will operate if voltage unbalance or negative sequence current is detected on the 480-volt 4000 amp generator bus and will cause the ANSI 86HR relay to operate (causing the generator tie bus breaker and generator breaker to trip). This alarm trip condition will be annunciated on the EGMP and the engine generator units will go through an automatic shutdown sequence.

- Time undervoltage on the 480-volt 4000 amp generator bus will cause the ANSI 27/2 relay to operate the ANSI 27/x2 auxiliary relay. The ANSI 27/x2 auxiliary relay will cause the

generator bus tie breaker and the generator breakers to trip, causing an automatic shutdown of the engine generator units and an alarm condition on the EGMP. In addition, the ANSI 27/x2 auxiliary relay is interlocked with the "preconditions" relays of the EGCP's, and will not allow start of the engine generator units when tripped. The generator bus tie breaker and generator breaker trips will be annunciated at the EGMP.

- ANSI HR 86 hand reset lockout relay. This relay will trip if the previous mentioned protective devices (ANSI 51/51G and ANSI 46) operate. Operation of the ANSI 86HR will cause the generator bus tie breaker and generator breakers to trip, cause an automatic shutdown of the engine generator units, and annunciation of the alarm condition on the EGMP.

- The generator bus tie breaker has a CLOSED/RESET/TRIP control switch with indicating lights. The breaker panel has the following instrumentation for monitoring the 480-volt 4000 amp generator bus: Power factor meter, watt meter, ampmeter, voltmeter, ampmeter and voltmeter power phase selector switches, and watthour demand meter. The 480-volt 4000 amp generator bus power factor, wattage, and amperage are also remotely monitored on the EGMP.

d. GENERATOR BREAKERS 7, 8, 9, 10 AND 11

- Time phase overcurrent and ground fault protective relay ANSI 51/51G. This protective relay will operate when phase overcurrent or ground fault is detected in the 480-volt 1600 amp generator power wiring to the generator bus. Operation of these relays will cause the generator breaker to trip, operate the ANSI 86HR relay at the EGCP and cause an automatic shutdown of the engine generator unit.

NOTE

There is not individual annunciation of this fault on the EGCP.

- Differential current from the generator connections to the line side of the generator breaker will cause the protective relay ANSI 87 to operate, causing an automatic shutdown of the engine generator unit by the EGCP ANDI 86HR relay.

- Protective relays for generator winding temperature (ANSI 49) and reverse power protection (ANSI 32) are provided and when operated will cause operation of the EGCP ANSI HR86 relay, automatic shutdown of the engine generator unit and annunciation on the EGCP.

I. POWER DISTRIBUTION

(1) DESCRIPTION

The Power Distribution System is shown in detail on the Contract Plans and various shop drawings. Refer to Table III-PO-PG-1 Power Generation Facilities - Facility equipment Summary, for contract Plan and shop drawing numbers which pertain to the power distribution system.

If the sludge gas production in the anaerobic digesters is less than the volume that is being used by the engine generator units, the waste gas burners will be deactivated. All engine generators that are on line will continue to run at full load as the sludge gas volume storage continues to drop. When the gas volume in the digester reaches the preset value of 72,000 CF each engine generator units on line will automatically begin to uniformly decrease load. When the sludge gas storage volume drops to the preset value of 50,000 CF all engines on line will have ramped down to and be operating at minimum load of 250 KW. At this time the EGMP annunciator will indicate alarm conditions "4 Engine Generator Low Gas Storage", "3 Engine Generator Low Gas Storage", "2 Engine Generator Low Gas Storage", and "1 Engine Generator Low Gas Storage" respectively as the preset gas volume levels are reached. At each alarm point, the operator is given the opportunity to decide whether to take one or more engine generator units off line and shut them down. If the gas storage volume in the digestion tanks continues to drop, a shutdown of all engine generator units remaining in operation will be initiated and the EGMP annunciator will indicate an alarm condition "Low Gas Storage - Engines Shutdown". The alarm conditions will automatically be reset at the levels shown when the sludge gas volume is increasing. If the engine generator units have been shutdown, the operator must manually initiate the automatic start sequence for the unit(s) which he wishes to restart after the "Low Gas Storage - Engines Shutdown" alarm condition has reset. The engine generator units will run at ½ full load (250 KW) initially, and then automatically increase load up to full load at the preset gas storage volume (72,000 CF).

III-PO-SPF - STANDBY POWER FACILITY (078)

A. STANDBY GENERATOR EQUIPMENT: SPF-G-3, 4, 5 AND 6

(1) DESCRIPTION

Four standby generator sets No. 3, 4, 5 and 6 located at Standby Power Facility are provided with the following components:

- Four diesel engine generator sets
- Engine starting systems
- Fuel oil supply system
- Exhaust gas silencer
- Lube Oil Supply System
- External engine waste heat cooling system
- Engine generator set controls and instruments
- Engine generator set control panel
- 13.2 kV metal-clad switchgear
- Grounding resistors

Each engine generator set consists of a diesel electric engine generators and required appurtenances (refer to the Division 5H3B Contractor's O & M Manual for a complete description of the engine generator sets). Each engine is rated at 1800 rpm loaded operating speed. The rating of each standby generator is 2000 Kw at 0.8 PF (2500 Kva); 13,200 volts, 3-phase, 60-hertz, grounded neutral. Each engine is a fuel injection, four cycle, single acting V-Type with 16 cylinders and a minimum displacement of 4210 cubic inches.

Each engine is provided with an engine driven, gear type, lubrication oil pump to supply fresh oil under pressure to main bearings, crank pin bearings, pistons, piston pins, timing gears, camshaft bearings and valve rocker mechanism. An engine mounted, water cooled, lube oil cooler is provided for the engine's lube oil system.

Each engine is provided with an engine mounted, gear driven, centrifugal jacket water pump of adequate capacity for use with the External Engine Waste Heat Cooling System described here-in-after. Two 6 kW, 480 volts, 3 phase jacket water heaters are also provided for each engine to maintain the jacket water temperature above freezing.

An engine mounted, engine driven fuel oil transfer pump is provided for each engine for transferring fuel oil from the day tank to the engine fuel system and for returning excess fuel back to the day tank. Fuel to each cylinder is accomplished through fuel injection system, with means provided for even fuel flow to each cylinder over the engine operating range. The maximum flow of each transfer pump is 332.9 gph at a maximum allowable temperature of 171 degrees F. The maximum fuel flow through the return line (to the day tank) is 270 gph. A differential check valve in the supply fuel line and a differential check valve in the return fuel line are provided for each engine. The fuel oil system also contains a fuel filter, stator temperature detector, bearing temperature detector and fuel priming pump. See the Division 5H3B Contractor's O&M Manual for detail drawings

Each generator is a standby duty, horizontal, two bearing, brushless type. The associated equipment of each engine generator consist of an exciter and voltage regulator. Three generator side current transformers for generator differential protection and one ground current transformer for ground fault protection are located in the generator terminal box.

The control and panels for Turbine Generators and Diesel Engine Generators are as follows:

a. MAIN PUMPING STATION CONTROLS FOR MP-G-1 AND MP-G-2

Controls are located at the following:

- Standby Generator Local Control Consoles No. 1 and No. 2
- Generator Local Automatic Synchronizing Panel
- 13.2 kV Indoor Switchgear No. 2

Standby Generator Local Control Consoles No. 1 and No. 2 are located at the turbine generator units MP-G-1 and G-2. The Generator Local Automatic Synchronizing Panel and 13.2 kV Indoor Switchgear No. 2 are located in the same area. (NOTE: Standby Generator Remote Control Consoles No. 1 and No. 2 and the Remote Automatic Synchronizing Panel at the Process Control Console have been removed as part of the Division 5H3B work.) The local control consoles, synchronizing panel and 13.2 kV Indoor Switchgear No. 2 have been modified to be compatible with the new paralleling controls at the Standby Power Facility. The modified equipment continues to provide starting and stopping control logic, monitoring and electrical protection. Paralleling of units MP-G-1 and MP-G-2 from this location using the Generator Local Automatic Synchronizing Panel is no longer operational. The modified equipment allows for operating MP-G-1 and MP-G-2 at the units for maintenance purposes, but not for connection to the plant loads. The tie bus in 13.2 kV Indoor Switchgear No. 2 has been removed to isolate the output of each generator. Under normal operating conditions, MP-G-1 and MP-G-2 are controlled from 13.2 kV Indoor Switchgear No. 3 at the Standby Power Facility. All control is initiated and paralleling accomplished from 13.2 kV Switchgear No. 3.

b. STANDBY POWER FACILITY CONTROLS

Controls are located in 13.2 kV Indoor Switchgear No. 3 which consists of a line up of metal clad switchgear with drawout vacuum circuit breakers, a line up of control sections for each generator and distribution breaker and a master generator control section.

Two control station type battery systems are provided. One system provides 24 volts d-c nominal for generator control and monitoring functions. The other system provides 125 volts d-c nominal for circuit breaker control. Each system is complete with console and built-in batteries, chargers and d-c secondary distribution panel.

(2) NORMAL OPERATION

a. OPERATIONAL OVERVIEW

1. The standby generation equipment functions in association with the 13.2 kV Switchgears No. 1, 2 and 3 to serve the plant electrical loads when both the utility (TECO) power services are not available. . The standby power system operates under one of the following modes that will be described in detail hereinafter:

- Normal - In the event that the plant looses both TECO feeders, the standby power system will automatically start and will provide power to the plant

- Load Test (generator exercising) - One or more of the standby generators can be connected in parallel with the TECO feeders for exercising the generators under load.

- *Standby Service - Under TECO's Standby Service Program, upon notification from TECO, the plant will be able to transfer the plant load from the TECO feeders to the standby generators.

2. Circuit breakers referenced by numbers throughout the text are prefixed with numbers that identifies the 13.2 kV switchgear in which the breaker is located. The prefix numbers 1, 2 and 3 correspond to the 13.2kV Outdoor Switchgear No. 1, the 13.2kV Indoor Switchgear No. 2 at the Main Pumping Station and the 13.2kV Indoor Switchgear at the Standby Power Facility respectively.

3. Terms are used to in the operation of the standby power equipment are defined as follows:

- Closed transition transfer - transferring the load between the standby generator and TECO is accomplished by synchronizing the generators to TECO, paralleling the two services, so an uninterrupted transfer from one power source to the other will occur.

- Load Demand - Monitors the load on the standby generators to adjust the number of generators operating to match the plant load.

- Base Load Operating Mode - Isolates the generator from the load sharing control and allows the generator to be loaded to a specific level using the Base Load adjustment.

4. The standby generation system and associated circuit breaker controls operate through an ANSI 43 Manual-Automatic control mode selector switch at 13.2 kV Switchgear No. 3. In the manual mode, all control functions are manually performed by the operator. In the automatic mode, all control functions are automatic except for specific steps described herein which require the operator to initiate the procedure.

5. All transfers of load between TECO and the standby generation system, except on TECO power failure are closed transition transfers. After a closed transition the load transfer between the generators and TECO will occur in approximately 10 to 15 seconds. When operating in parallel with TECO, the engine generator control system monitors the imported power and regulates the output power of the engine generators to match the operating plant load and insure that the plant imports a minimum power from TECO. The setting for the minimum import power is adjustable and was initially set to approximately 300kW. When transferring the plant load from TECO to the engine generators, the imported power set point is reduced to about 100kW to minimize power transients during the transfer.

NOTE

Per the agreement with TECO to allow parallel operation of the plant's standby generators, a forward power relay (ANSI 32) monitors the imported power on each TECO feeder in 13.2 kV Switchgear No. 1. When the standby generators are paralleled with TECO and the imported power falls below 60 kW, the control system has 0.7 seconds to restore minimum imported power before the associated distribution breaker (3-52-S1 or 3-52-S2) will open

6. In the Normal or Standby Service mode of operation, the programmable logic controller (PLC) in the master generator control section controls the 13.2 kV Switchgear No. 3 distribution circuit breakers (3-52-S1 & 3-52-S2) closure to the 13.2 kV Switchgear No. 1 system bus, until at least three generators are connected in parallel to the 13.2 kV Switchgear No. 3 bus to handle the plant's base and automatically started loads.

7. In the event that less than three generators are connected in parallel on 13.2 kV Switchgear No. 3 bus, the control system inhibits closure of the 13.2 kV Switchgear No. 3 distribution circuit breakers (3-52-S1 & 3-52-S2) and sounds an audible alarm. After the plant operators have added more generators, the operation of the load sequence selector switch will automatically reinitiate the transfer procedure.

8. Load Demand/Engine Start/Stop Sequence

When the standby generators are operating under either the Normal or Standby Service mode, the control system will automatically start or stop the generators based on plant load operating as follows:

(a) The sequence for starting and stopping generators is set through the PLC Register Access Panel. The control system uses this setting to determine the next generator that will be started or stopped based on the level of plant load. The generators are added in sequence to the bus and subtracted in reverse sequence. Should a generator

be locked out of the system, it is skipped over and the next generator in sequence is started as required

(b) If the sequence is changed, any engine on line will remain on line. If the generator selected as the base generator is not on line, it will immediately start up and be placed on line.

(c) The load demand controls are inhibited from operating after the generators are started for a 0 to 60 minute adjustable time delay and has been initially set for about 25 minutes.

(d) Deceasing load set point is settable through the PLC register access panel from 40 to 80 percent and is initially set at 60 percent. When the load supplied by the standby generators minus the capacity of the next generator to be subtracted decreases to the set point, the control system will initiate a signal to stop the next generator in sequence.

> For Example: With four 2000kW generators operating, when the load served decreases to 3600kW (60% * [80000kW - 2000kW]) the next generator in sequence will be stopped.

(e) Increasing load set point is settable through the PLC register access panel from 60 to 100 percent and is initially set at 80 percent. When the load supplied by the standby generators increases to the set point, the control system will initiate a signal to start the next generator sequence.

> For Example: With three 2000kW generators operating, when the load served increase to 4800kW (80% of 6000kW) the next generator in sequence will be started.

(f) The overload and increase load time delays are settable through the PLC register access panel. The ranges are 0 to 10.0 seconds for the overload set point and 0 to 99.9 for the increase load time delay. The decrease load time delay is adjustable from 0 to 99.9 seconds.

9. Engine Control Selector Switch

(a) A four-position generator selector switch labeled, "Lockout/Reset-Off-Auto-Run" is provided on each generator control section cubicle door.

(b) When the selector switch is in the "Lockout/Reset" position, the generating set is locked out. Whenever the selector switch is placed in the "Lockout/Reset" position

while the generator is operating, it will immediately shut down and its circuit breaker will trip.

(c) An "Off" position is provided to allow for a normal shutdown, with a time delay to allow the engine to cool after operating under load. When the selector switch is placed in the "Off" position while the generator is operating, the generator circuit breaker will trip and the engine will continue to operate until the expiration of the cool down time delay before shutting down.

(d) When the selector switch is placed in the "Auto" position, the generator is on standby and will start whenever a start signal is received from the PLC. When the utility power returns, the PLC signals the generator to shut down, the circuit breaker trips and the engine continues to operate for the cool down time delay period before shutting down.

(e) When the selector switch is in the "Run" position, the generator starts and comes up to speed. It continues to run until the selector switch is returned to "Off" or "Lockout/Reset" position. This position is used for testing or manual operation.

b. LOSS OF UTILITY SEQUENCE (TECO POWER FAILURE)

1. Upon failure of both TECO service lines, an adjustable time delay of 0.5 to 10 seconds is initiated.

2. At the end of the time delay, 13.2kV Switchgear No. 1 main (TECO incoming feeders) and tie breakers 1-52-1, 1-52-2 and 1-52-TIE open, 13.2 kV Switchgear No. 3 tie breaker 3-52-TIE closes and an automatic start sequence is initiated for all generators. As shown on the 13.2kV distribution diagram (see Figure III-PO-SPF-7). The tie breaker 3-52-TIE is closed so that all generators can supply power to the plant independent of which bus in the 13.2kV Outdoor Switchgear No. 1 the loads are connected.

3. Upon receipt of a start command, all of the generators with the Engine Generator Switch set to the AUTO position will start unless otherwise locked out.

4. The associated output circuit breaker for the first generator to reach operating voltage and frequency closes to the bus in 13.2 kV Switchgear No. 3.

5. The next generator to randomly reach operating voltage and frequency synchronizes to the first generator and the associated output circuit breaker closes.

6. Likewise, each of the remaining generators synchronizes to the bus and the associated generator circuit breaker closes.

7. The "first start" control logic positively prevents two engine generators from being connected to the same dead bus simultaneously.

8. Upon sensing that all of the generators are connected to the bus, the system initiates an adjustable time delay of 0 to 30 seconds to allow for a voltage check of both TECO service lines prior to loading the generators.

9. At the end of the time delay and providing that voltage has not returned to both TECO service lines, distribution breakers 3-52-S1 and 3-52-S2 sequentially close to energize 13.2 kV Switchgear No. 1. A manually operated loading sequence selector switch determines the closing order of breakers 3-52-S1 and 3-52-S2.

c. RETURN OF UTILITY SEQUENCE (TECO POWER AVAILABLE)

1. When voltage returns to both TECO service lines and after an adjustable time delay of 0 to 60 minutes, a restore enable signal is initiated to allow a manual restoration of both TECO service lines. During the timing period both the TECO Line 1 Available and TECO Line 2 Available indicating light will flash. A restore pushbutton for each of the TECO service lines (located on 13.2 kV Switchgear No. 3 Master Control Section) initiates the restoration sequence. Although the following procedure starts with TECO service line No. 1, it can also start with TECO service line No. 2.

2. Upon operating the restore pushbutton for TECO service line No. 1, the generator bus synchronizes to TECO service line No. 1 and main breaker 1-52-1 closes.. Upon completion of the load transfer, distribution breaker 3-52-S1 opens.

3. With TECO service line No. 1 restored to service, operate the restore pushbutton for TECO service line No. 2. The generator bus synchronizes to TECO service line No. 2 and main breaker 1-52-2 closes. Upon completion of the load transfer, distribution breaker 3-52-S2 and tie breaker 3-52-TIE opens. Tie breaker 3-52-TIE is opened so that generators on each bus can be exercised independently.

4. As each generator is unloaded, its associated output circuit breaker opens. The generator will continue to run unloaded for an adjustable cool down time period before complete shutdown

d. GENERATORS EXERCISING SEQUENCE

NOTE

In the event that either TECO service line fails during a generator exercising period, the affected line will sense loss of minimum import power (ANSI 32 relay) and trip the associated distribution breaker in 13.2 kV Switchgear No. 3. This is because that during a load test the

operating standby generators may not have sufficient generating capacity for supplying the operating plant load. The generators in operation at the time will unload and initiate a normal shutdown sequence. However, if it is determined that the TECO service failure will be of a duration to warrant operating the plant on standby power, the Load Test-Normal-Standby Service selector switches should be manually operated to the "Normal" position. For generators that were not being load tested, the Engine Generator Control Switch should be manually operated to the "Auto" position. The running standby generators will then continue to run, additional generators will start and assume load as described above under "Loss of Utility Sequence (TECO power Failure)."

1. The sequence initiates when either or both of the "Load Test-Normal-Standby Service" duty selector switches for TECO service lines No. 1 and No. 2 (located on 13.2 kV Switchgear No. 3) are operated to the "Load Test" position. Tie breaker 3-52-TIE remains open when exercising the generators to the plant load.

2. When the duty selector switch for TECO service line No. 1 is operated to the "Load Test" position, an automatic start sequence initiates for all the generators connected to 13.2 kV Switchgear No. 3, Bus No. 1. As shown on the 13.2kV distribution diagram (Figure III-PO-SPF-7).

3. Upon receipt of a start command, all of the generators with the Engine Generator Switch set to the AUTO position will start unless otherwise locked out.

4. The associated output circuit breaker for the first generator to reach operating voltage and frequency closes to the bus in 13.2 kV Switchgear No. 3.

5. The next generator to randomly reach operating voltage and frequency synchronizes to the first generator and the associated output circuit breaker closes.

6. Likewise, each of the remaining generators synchronizes to the bus and the associated generator circuit breaker closes.

7. The "first start" control logic positively prevents two engine generators from being connected to the same dead bus simultaneously.

8. After all of the associated generators have synchronized and closed to 13.2 kV Switchgear No. 3, Bus No. 1, the standby generation system is ready to assume the plant load connected to 13.2 kV Switchgear No. 1, Bus No. 1.

9. By operating the Loading Sequence selector switch to the 3-52-S1 position, the generator Bus No. 1 will synchronize to TECO service line No. 1 and distribution breaker 3-52-S1 will close.

10. The generators gradually assume the plant load connected to 13.2 kV Switchgear No. 1, Bus No. 1. When operating in parallel with TECO, the engine generator control system monitors the import power and regulates the output power of the engine generators to match the operating plant load and insure that the plant imports a minimum power from TECO. The setting for the minimum import power is adjustable and is presently set to approximately 300kW.

11. The operating procedure for exercising the generators connected to 13.2 kV Switchgear No. 3 Bus No. 2 is similar. Operate the duty selector switch for TECO service line No. 2 to the "Load Test" position and the Loading Sequence selector switch to the 3-52-S2 position to initiate the transfer sequence. Distribution breaker 3-52-S2 switches the load.

12. To terminate the exercising of the generators and restore all load to TECO line No. 1, operate the associated duty selector switch from "Load Test" to "Normal". The generators gradually unload until all load on 13.2 kV Switchgear No. 1 Bus No. 1 is assumed by TECO service Line No. 1. Upon completion of the load transfer, distribution breaker 3-52-S1 opens. To terminate the exercising of the generators connected to 13.2 kV Switchgear No. 3 Bus No. 2, initiate the same sequence using the selector switches associated with generator Bus No. 2. As each generator is unloaded, the associated output circuit breaker opens. The generator continues to run unloaded for an adjustable cool down period of time before complete shutdown.

e. TECO STANDBY POWER PROGRAM SEQUENCE (TECO GOING OFF LINE)

1. Upon operating both selector switches to the "Standby Service" position, tie breaker 3-52-TIE in 13.2 kV Switchgear No. 3 will close and an automatic start sequence initiated for all of the generators.

2. Upon receipt of a start command, all of the generators with the Engine Generator Switch set to the AUTO position will start unless otherwise locked out.

3. The associated output circuit breaker for the first generator to reach operating voltage and frequency closes to the bus in 13.2 kV Switchgear No. 3.

4. The next generator to randomly reach operating voltage and frequency synchronizes to the first generator and the associated output circuit breaker closes.

5. Likewise, each of the remaining generators synchronizes to the bus and the associated generator circuit breaker closes.

6. The "first start" control logic positively prevents two engine generators from being connected to the same dead bus simultaneously.

7. After all of the generators have synchronized and closed to the bus in 13.2 kV Switchgear No. 3, the standby generation system is ready to assume the plant load.

8. When the loading sequence selector switch is operated to the 3-52-S1 position, the generator bus synchronizes to TECO service line No. 1 and distribution breaker 3-52-S1 closes.

9. The generators gradually assume the plant load on 13.2 kV Switchgear No. 1, Bus No. 1. Upon completion of the load transfer, main breaker 1-52-1 opens.

10. By operating the loading sequence selector switch to the 3-52-S2 position, the generator bus synchronizes to TECO service line No. 2 and distribution breaker 3-52-S2 closes.

11. The generators gradually assume the balance of the plant load on 13.2 kV Switchgear No. 1, Bus No. 2. Upon completion of the load transfer, main breaker 1-52-2 opens.

12. When TECO is ready to restore power to the plant, the operation is as described in the subsection "Return of Utility Sequence".

(3) START UP AND SHUTDOWN PROCEDURES

To start up and shutdown the standby generation equipment, use the following procedures.

NOTE

Procedures described herein relate to the standby generators consisting of the Turbine Generators located in the Main Pumping Station and the Diesel Engine Generators located in the Standby Power Facility. Procedures relating to the Sludge Gas Engine Generators are described in the section titled "Raw Sewage Pumping Station".

a. START-UP, SUPPORTING SYSTEMS

1. Procedures relating to starting the supporting systems for the Turbine Generators are described in the section titled "Power Generation".

2. Start up the External Engine Waste Heat Cooling System, Standby Generator Starting Air System and Standby Generator Fuel Oil Supply System as described hereinafter.

3. Close the motor circuit protectors on MCC-92 which serve the roof exhaust fans SPF-REF-1 through SPF-REF-6. Set the controls on the Temperature Control Panel to AUTO for each

fan. Close the d-c circuit breakers at the 24 volt d-c and 125 volt d-c battery consoles. Place the FLOAT-EQUALIZE switch on each console in the FLOAT position to maintain the batteries in each console at full change.

4. Close the branch breakers in LP-92B which serve generator related auxiliary and support systems.

b. NORMAL START-UP, (LOSS OF TECO SERVICE) ENGINE GENERATORS (See Figure III-PO-SPF-8)

Under this procedure, the standby generator system will be set to respond to a complete TECO power failure to the plant.

1. At the control sections of 13.2 kV Switchgear No. 3 for Standby Generators MP-G-1, 2 and SPF-G-3, 4, 5 and 6 perform the following:
   (a) Set the manual synchronizing control switch MSS (Item 29)to the OFF position.
   (b) For all generators that are operational, set the engine control selector switch ECS (Item 30) to the AUTO position.
   (c) Set the base load selector switch (Item 28) to the OFF position.
   (d) At the control sections for turbine generators MP-G-1 and 2 set the control selector switches LRS (Item 31) to the LOCAL position.
   (e) At the control sections for engine generators SPF-G-3, 4, 5 and 6, set the voltage control switch (Item 34) to the AUTO position.

2. At the master generator control section of 13.2 kV Switchgear No. 3, perform the following:
   (a) Set the master control mode selector switch (Item 54) to the AUTO position.
   (b) Set both the generator Bus No. 1 control switch (Item 47) and generator Bus No. 2 control switch (Item 51) to the NORMAL position.
   (c) Set the loading sequence selector switch (Item 53) to the preferred position (3-52-S1 or 3-52-S2) which determines the bus in 13.2 kV Switchgear No. 1 that is connected to the generators first.
   (d) Set the generator unloading sequence using the PLC register access panel.

When a sustained power interruption occurs, on both TECO lines the standby generation equipment will automatically start-up, parallel and assume the plant load.

c. NORMAL SHUTDOWN, ENGINE GENERATORS (See Figure III-PO-SPF-8)
When power is available on both TECO lines, the TECO lines 1 and 2 restore pushbuttons on the master generator control section are used to initiate the restoration of the TECO lines, this procedure will unload and initiate the cool down period for generators.

1. Observe that both the TECO Line 1 Available indicating light (Item 45) and TECO Line 2 Available indicating light (Item 49) on the Master Generator Control section remain ON to indicate the restore enable timing period has finished. The plant load can be restored to TECO by performing the following procedure at the master generator control section of 13.2 kV Switchgear No. 3:
   (a) Press the TECO Line 1 Restore pushbutton (item 48).
   (b) After the TECO Line 1 has been restored, press the TECO Line 2 Restore pushbutton (item 52).

NOTE

The order that the TECO Lines are restored is up to the operator.

After the both TECO lines have been restored, the generator will operate unloaded for an adjustable cool down period before being shutdown.

d. EXERCISING START-UP, ENGINE GENERATORS (See Figure III-PO-SPF-8)
The generators should be exercised about once a week either with or without load. Exercising the generator without load is normally done when performing maintenance function on the generators. It is recommended to exercise the generators under load to demonstrate that they will operate and function satisfactorily during a sustained power interruption and while operating under the TECO Standby Power Program.

1. To exercise the generators under load, perform the following steps:
   (a) At the control sections of 13.2 kV Switchgear No. 3 for each of the Standby Generators MP-G-1, 2 and SPF-G-3, 4, 5 and 6 that is to be exercised under load perform the following:
      1) Set the manual synchronizing control switch MSS (Item 29)to the OFF position.
      2) Set the engine control selector switch ECS (Item 30) to the AUTO position.
      3) Set the base load selector switch (Item 28) to the OFF position.
      4) At the control sections for turbine generators MP-G-1 and 2 set the control selector switches LRS (Item 31) to the LOCAL position.
      5) At the control sections for engine generators SPF-G-3, 4, 5 and 6, set the voltage control switch (Item 34) to the AUTO position.

   (b) At the master generator control section of 13.2 kV Switchgear No. 3, perform the following:

1) Set the master control mode selector switch (Item 54) to the AUTO position.
2) Set one or both the Generator Bus No. 1 control switch (Item 47) and Generator Bus No. 2 control switch (Item 51) to the LOAD TEST position.

2. To exercise standby generators MP-G-1 or 2 without load, perform the following:
   (a) Set the control selector switch LRS (Item 31) on the associated control section of 13.2 kV Switchgear No. 3 to the REMOTE position.

   (b) Use the controls on the associated local control console at the Main Pumping Station to operate the unit. Refer to section headed "III-PO-PG Power Generation."

3. To exercise standby generators SPF-G-3, 4, 5 or 6 without load, perform the following:
   (a) Set the master control mode selector switch (Item 54) on the master generator control section of 13.2 kV Switchgear No. 3 to the MANUAL position.

   (b) Set the engine control selector switch ECS (Item 30) on the associated control section of 13.2 kV Switchgear No. 3 to the RUN position.

NOTE

Operating with the master control mode selector switch in MANUAL, disables the automatic synchronizing and generator breaker controls. However, this does not prevent the starting of multiple units at which time they can be manually paralleled and loaded.

e. EXERCISING SHUTDOWN, ENGINE GENERATORS (See Figure III-PO-SPF-8)
   1. To terminate exercising generators under load, perform the following steps:
      (a) At the master generator control section of 13.2 kV Switchgear No. 3, perform the following:
         1) Set one or both the Generator Bus No. 1 control switch (Item 47) and Generator Bus No. 2 control switch (Item 51) to the NORMAL position.

      (b) After the load test has been complete and the engines cool down period has ended at control sections of 13.2 kV Switchgear No. 3 for each of the Standby Generators MP-G-1, 2 and SPF-G-3, 4, 5 and 6 that are operational perform the following:
         1) Set the manual synchronizing control switch MSS (Item 29)to the OFF position.
         2) Set the engine control selector switch ECS (Item 30) to the AUTO position.
         3) Set the base load selector switch (Item 28) to the OFF position.
         4) At the control sections for turbine generators MP-G-1 and 2 set the control selector switches LRS (Item 31) to the LOCAL position.

5) At the control sections for engine generators SPF-G-3, 4, 5 and 6, set the voltage control switch *(Item 34) to the AUTO position.

2. To terminate the exercising of standby generators MP-G-1 or 2 without load, perform the following:
   (a) Use the controls on the associated local control console at the Main Pumping Station to operate the unit. Refer to section headed "III-PO-PG Power Generation."

   (b) Set the control selector switch LRS (Item 31) on the associated control section of 13.2 kV Switchgear No. 3 to the LOCAL position.

3. To terminate the exercising of standby generators SPF-G-3, 4, 5 or 6 without load, perform the following:
   (a) Set the engine control selector switch ECS (Item 30) on the associated control section of 13.2 kV Switchgear No. 3 to the OFF position.

   (b) Set the master control mode selector switch (Item 54) on the master generator control section of 13.2 kV Switchgear No. 3 to the AUTO position.

   (c) After the load test has been complete and the engines cool down period has ended at control sections of 13.2 kV Switchgear No. 3 for each of the Standby Generators SPF-G-3, 4, 5 and 6 that are operational perform the following:
      1) Set the manual synchronizing control switch MSS (Item 29) to the OFF position.
      2) Set the engine control selector switch ECS (Item 30) to the AUTO position.
      3) Set the base load selector switch (Item 28) to the OFF position.
      4) At the control sections for engine generators SPF-G-3, 4, 5 and 6, set the voltage control switch (Item 34) to the AUTO position.

f. TECO STANDBY POWER PROGRAM STARTUP, ENGINE GENERATORS (See Figure III-PO-SPF-8)

When called by TECO to transfer the plant to the standby generators under the TECO Standby Service Program execute the following procedure:

1. At the control sections of 13.2 kV Switchgear No. 3 for Standby Generators MP-G-1, 2 and SPF-G-3, 4, 5 and 6 perform the following:
   (a) Set the manual synchronizing control switch MSS (Item 29)to the OFF position.

   (b) For all generators that are operational, set the engine control selector switch ECS (Item 30) to the AUTO position.

   (c) Set the base load selector switch (Item 28) to the OFF position.

(d) At the control sections for turbine generators MP-G-1 and 2 set the control selector switches LRS (Item 31) to the LOCAL position.

(e) At the control sections for engine generators SPF-G-3, 4, 5 and 6, set the voltage control switch (Item 34) to the AUTO position.

2. At the master generator control section of 13.2 kV Switchgear No. 3, perform the following:

(a) Set the master control mode selector switch (Item 54) to the AUTO position.

(b) Set both the generator Bus No. 1 control switch (Item 47) and generator Bus No. 2 control switch (Item 51) to the STANDBY SERVICE position.

(c) Set the loading sequence selector switch (Item 53) to the position (3-52-S1 or 3-52-S2). The controls will then synchronize and parallel the generators with the selected TECO line. After the generators have assumed the plant load, the respective TECO incoming line Breaker will open.

(d) Set the loading sequence selector switch (Item 53) to the other position (3-52-S2 or 3-52-S1). The controls will then synchronize and parallel the generators with the selected TECO line. After the generator have assumed the plant load, the respective TECO incoming line Breaker will open.

g. TECO STANDBY POWER PROGRAM SHUTDOWN, ENGINE GENERATORS (See Figure III-PO-SPF-8)

When power is available on both TECO lines, the TECO lines 1 and 2 restore pushbuttons on the master generator control section are used to initiate the restoration of the TECO lines, this procedure will unload and initiate the cool down period for generators.

1. Observe that both the TECO Line 1 Available indicating light (Item 45) and TECO Line 2 Available indicating light (Item 49) on the Master Generator Control section remain ON to indicate the restore enable timing period has finished. The plant load can be restored to TECO by performing the following procedure at the master generator control section of 13.2 kV Switchgear No. 3:

(a) Set both the generator Bus No. 1 control switch (Item 47) and generator Bus No. 2 control switch (Item 51) to the NORMAL position.

(b) Press the TECO Line 1 Restore pushbutton (item 48).

(c) After the TECO Line 1 has been restored, press the TECO Line 2 Restore pushbutton (item 52).

NOTE

The order that the TECO Lines are restored is up to the operator.

After the both TECO lines have been restored, the generator will operate unloaded for an adjustable cool down period before being shutdown.

(4) ALTERNATE OPERATION

The start-up and shutdown procedures previously described herein are the normal modes of operation. However, there are other features of the system which allow for alternative means of operation and control.

a. 13.2 KV SWITCHGEAR NO. 3 - GENERATOR CONTROL SECTIONS (See Figure III-PO-SPF-8)

The following control devices and their function are provided on each of the generator control sections.

1. AUTO-MANUAL Voltage Control Sector Switch (Item 34 typical for SPF-G-3 through 6) -
   (a) In the AUTO position, the voltage output of the generator is automatically controlled by the voltage regulator.

   (b) In the MANUAL position, the voltage output and frequency are manually adjusted using, the Voltage (Item 27) and Frequency (Item 26) Adjustment Switches on the front of the section.

2. ON-OFF Base Load Selector Switch (Item 28) -
   (a) In the OFF position, the generator is loaded and unloaded to and from the load sharing system via the associated Automatic Generator Loading Control (AGLC).

   (b) In the ON position, the generator is removed from the load sharing loop and can be base loaded using the Base Load Adjustment (Item 67).

3. ON-OFF Manual Synchronizing Control Switch (Item 29) -
   (a) In the OFF position, synchronizing and paralleling to the generator bus is automatically controlled by the associated Automatic Synchronizer.

   (b) In the ON position, synchronizing and paralleling to the generator bus is manually accomplished using the generator breaker control switch CBS (Item 20) in conjunction with the synchronizing lights (Items 21 & 22) or synchroscope mounted on the swing panel at the master generator control section.

CAUTION

Manual paralleling should only be attempted by personnel thoroughly trained in the procedure.

b. 13.2 KV SWITCHGEAR NO. 3 - MASTER GENERATOR CONTROL SECTION (See Figure III-PO-SPF-8)

The following control devices and their function are provided on the master generator control section.

1. AUTO-MANUAL Master Control Mode Selector Switch (Item 54) -
   (a) In the AUTO position, the control functions sequentially occur when an operation is initiated as described under the various modes of operation hereinbefore.

   (b) In the MANUAL position, functions which normally occur automatically must be manually initiated or performed

2. Synchronizing Selector Switch TECO LINE 1 - TECO LINE 2 - GEN (Item 60) and Synchronizing Selector Switch BUS 1 - BUS 2 (Item 59) - These switches are used to select the two sources to be paralleled when manually synchronizing and paralleling.

c. 13.2 KV SWITCHGEAR NO. 3 - DISTRIBUTION BREAKER CONTROL SECTIONS (See Figure III-PO-SPF-8)

The following control devices and their function are provided on each of the two distribution breaker control sections.

1. RUN-CHECK-PERMISSIVE-OFF Mode Selector Switch (Item 23) - This switch determines the operating mode of the associated synchronizer.
   (a) In the RUN position, allows for automatic synchronization and closing the associated circuit breaker.

   (b) In the CHECK position, allows testing for correct synchronizing operation, but will not close the associated breaker.

   (c) In the PERMISSIVE position, the synchronizer will check for acceptable synchronization but does not trim the speed or adjust voltage of the generator. If synchronization is correct, the associated breaker will close.

   (d) In the OFF position, the synchronizer is out of operation.

2. AUTO-MANUAL Control Mode Switch (Item 54) -
   (a) In the AUTO position, synchronizing and paralleling of the generator bus to the utility source occurs automatically when the control sequence is initiated.

   (b) In the MANUAL position, synchronizing and paralleling of the two sources is manually accomplished using the breaker control switch in conjunction with the synchronizing lights or synchroscope mounted on the swing panel of the master generator control section.

CAUTION

Manual paralleling should only be attempted by personnel thoroughly trained in the procedure.

B. EXTERNAL ENGINE WASTE HEAT COOLING SYSTEM: SPF-HE-1, 2, 3 AND 4, SPF-SEP-1 AND 2, SPF-CT-1, 2 AND 3 AND SPF-JWP-1, 2 AND 3

(1) DESCRIPTION (SEE FIGURE III-PO-SPF-1)

An external engine waste heat cooling system is provided for the standby diesel engine generators which includes the following equipment:

- Four water to water heat exchangers to transfer each engines' waste heat to the external engine waste heat cooling system
- Two centrifugal vortex separators
- Three cooling towers
- Three external jacket water pumps
- Chemical solution tank, mixer and pump

The water to water heat exchangers, designated SPF-HE-1, 2, 3 and 4, are of the shell and tube type with a completely counter flow paths for fluid flow and are mechanically cleanable on both shell side and tube side. The heat exchangers transfer heat from the engine's jacket water to the external engine waste heat cooling system.

The centrifugal vortex separators, designated SPF-SEP-1 and 2, are provided to remove separable solids from the external engine waste heat cooling system. The separators remove 98 percent by weight of separable solids 200 mesh and larger. The separated solids can be removed from the separator by a manually operated valve at each unit. The solids should be removed after each engine generator exercise or full operation.

Each cooling tower, designated SPF-CT-1, 2 and 3, has a capacity for cooling 430 gpm of water from 130 degrees F to 90 degrees F at 79 degrees F ambient wet bulb temperature. Each cooling tower has a capacity to cool the waste heat from two engine generators. One cooling tower is provided as a standby system. Each cooling tower includes one fan with a 5 hp low speed motor and a 15 hp high speed motor. Both fans are 1,800 rpm, 3 phase, 60 hertz and 460 volts. Each cooling tower sump is provided with a 5 KW, 460 volt, 3 phase, 60 hertz, electric immersion heater to keep the sump water temperature above 40 degrees F during cold weather. A control panel is provided for each cooling tower which includes:

- ON/OFF power switch
- Transformer
- 15 second time delay
- HAND-OFF-AUTO switch for each fan and heater
- LOW SPEED-HIGH SPEED switch for each fan
- Heater indicating light
- Power ON indicating light
- Two fan motor indicating lights

- Heater contactor

Each external jacket water pump, designated SPF-JWP-1, 2 and 3, is a single stage, double suction, split case, frame mounted horizontal centrifugal pump for a flow rate capacity of 430 gpm within a temperature range of 40 to 130 degrees F. Each pump is direct driven with motor rated at 10 HP and motor speed of 1750 rpm, 460 volts, 3-phase and 60-hertz. Two pumps are provided to operate fully when all four standby engine generators are in operation and one pump is provided as standby jacket water pump.

A motor operated butterfly valve is provided for each water to water heat exchanger. These motor operated butterfly valves, designated SPF-MV-1, 2, 3 and 4, are open when the engine generators are in operation.

The chemical solution feed tank, chemical solution feed mixer, designated SPF-CFM-1, and chemical solution feed pump, designated SPF-CFP-1, are provided for manual addition of corrosion-inhibiting solution to the external engine waste heat cooling system. The tank has a 56 gallon capacity and is 35 inches long and 22-3/4 inches in diameter. The mixer has a ¼ HP, 1750 rpm, 1 phase, 60 hertz, 115 volts motor and a shaft measuring 32 inches long and ½ inches in diameter. The pump has a capacity of 5 gpm at 40 feet of head with a motor rated at ½ HP, 1750 rpm, 460 volts, 3 phase and 60 hertz.

(2) NORMAL OPERATION:

Under normal operation, when one standby engine generator, SPF-G-3, 4, 5 or 6, is in operation, the associated water to water heat exchanger, a separator SPF-SEP-1 or 2, a jacket water pump SPF-JWP-1, 2 or 3 and a cooling tower SPF-CT-1, 2 or 3 are in operation.

When two standby engine generators are in operation; each of the associated water to water heat exchangers, a separator SPF-SEP-1 or 2, a jacket water pump SPF-JWP-1, 2 or 3 and a cooling tower SPF-CT-1, 2 or 3 are in operation.

When three standby engine generators are in operation, each of the associated water to water heat exchangers, two separators SPF-SEP-1 and 2, two jacket water pumps SPF-JWP-1, 2 or 3 and two cooling towers SPF-CT-1, 2 or 3 are in operation.

When all four standby engine generators, SPF-G-3, 4, 5, and 6, are in operation, each associated water to water heat exchangers SPF-HE-1, 2, 3 and 4, two separators SPF-SEP-1 and 2, two of the jacket water pumps SPF-JWP-1, 2 or 3 and two of the cooling towers SPF-CT-1, 2 or 3 are in operation.

The motor operated butterfly valves SPF-MV-1, 2, 3 and 4 are provided with an ON/OFF selector switch, a LOCAL-REMOTE selector switch and a STOP pushbutton at each valve. Under normal operation, the LOCAL-REMOTE switch is set on REMOTE and the butterfly valve will automatically open whenever the corresponding generator is in operation.

When the temperature of the engines' jacket water reaches 198 degrees F, a corresponding butterfly valve at the engine will open to allow the engines' jacket water to flow into the heat exchanger to be cooled down by the external waste heat cooling system. When the temperature of the engines' jacket water falls below 180 degrees F, the butterfly valve on the engines' jacket water system will close and the engines' jacket water will no longer flow into the heat exchanger. The engine generator will completely shutdown if the engine jacket water reaches 225 degrees F.

The jacket water pumps SPF-JWP-1, 2 and 3 are provided with an ON-OFF selector switch and a TEST pushbutton at each unit and a HAND-OFF-AUTO selector switch, a red running indicating light, a RESET pushbutton and an elapsed time meter on Motor Control Center MCC-92 for each pump. Under normal operation, when the HAND-OFF-AUTO selector switch for each designated pump is in the AUTO position, the jacket water pumps will start up when the standby engine generators are in operation and the corresponding butterfly valves are in the open position. When the HAND-OFF-AUTO selector switches are in the HAND position, the jacket water pumps will start up manually by placing the ON/OFF selector switch at the unit in the ON position.

NOTE

The jacket water pump(s) must be operated only when the corresponding motor operated butterfly valve(s), SPF-MV-1, 2, 3 and 4, are in the open position.

Each cooling tower is provided with a Cooling Tower Control Panel. Each control panel contains an ON/OFF main power selector switch, a HAND-OFF-AUTO selector switch for the electric emersion heater and an ON/OFF selector switch, HAND-OFF-AUTO selector switch and a HIGH-LOW selector switch for the cooling tower fan.

Under normal operation, when the main power ON/OFF selector switch is in the ON position and the HAND-OFF-AUTO selector switch for the cooling fan is in the AUTO position, the cooling fan is automatically controlled by the temperature of the jacket water in the cooling tower sump. When the temperature of the water rises above 82 degrees, the fan will be in operation at low speed, and when the temperature rises above 85 degrees, the fan will change to high speed. If the temperature falls back below 82 degrees, the fan will return to low speed, and when the temperature falls below 79 degrees, the fan will turn off.

The electric immersion heater in each cooling tower is provided to maintain sump water temperature in the cooling tower sumps at 40 degrees F minimum. When the HAND-OFF-AUTO selector switch for the heater is placed in the AUTO position, the heater will be controlled automatically by the temperature of the jacket water in the cooling tower sump. When the HAND-OFF-AUTO selector switch for the heater is placed in the HAND position, the heater will be in operation continuously.

The addition of chemical solution for corrosion-inhibition in the external jacket water pipelines is controlled by manually operating the chemical solution pump, designated SPF-CFP-1 and the chemical

solution mixer. The pump and the mixer will operate continuously when the ON/OFF selector switches located near the unit are in the ON position.

(3) START-UP AND SHUTDOWN PROCEDURE

a. START-UP

- Close the circuit breaker for each cooling tower, jacket water pump and jacket water valve on Motor Control Center MCC-92
- Open the manually operated valves necessary to run the External Engine Waste Heat Cooling System (see Figure III-PO-SPF-1)
- Place the main power ON/OFF selector switch at each designated Cooling Tower Control Panel in the ON position
- Place the HAND-OFF-AUTO selector switch for each cooling tower fan and heater located on the Cooling Tower Control Panel in the AUTO position
- Place the LOCAL-REMOTE selector switch at each jacket water butterfly valve in the REMOTE position
- Place the ON/OFF selector switch at each designated jacket water pump and jacket water butterfly valve in the ON position
- Place the HAND-OFF-AUTO selector switch located on MCC-92 in the AUTO position for each designated jacket water pump

NOTE

The jacket water pumps are now ready to automatically start when the standby generators are in operation as described under "Normal Operation".

b. SHUTDOWN

- Place the HAND-OFF-AUTO selector switches located on MCC-92 in the OFF position for the designated jacket water pumps
- Or place the HAND-OFF-AUTO cooling fan selector switch located on the Cooling Tower Control Panel in the OFF position for the designated cooling towers

NOTE

The external waste heat cooling system should stay in operation after the standby engine generators are shutdown until each engine generator jacket water temperature has been reduced to its' designated set point.

(4) ALTERNATE OPERATION

The external engine waste heat cooling system can be operated manually as follows:

- Place the LOCAL-REMOTE switch at each butterfly valve in the LOCAL position, then place the ON/OFF selector switch at each unit in the ON position

- Place HAND-OFF-AUTO cooling fan selector switch located on the designated Cooling Tower Control Panels in the HAND position, place the ON/OFF selector switch at the designated control panels in the ON position and place the HIGH-LOW selector switch at the designated control panels in the desired position
- Place the HAND-OFF-AUTO selector switch(es) located on MCC-92 in the HAND position for the selected jacket water pump(s)

(5) MONITORS AND ALARMS

Each Cooling Tower Control Panel includes a control power ON, fan high speed ON, fan low speed ON and basin heater ON indicating lights. Alarm indicating lights are provided at the Cooling Tower Control Panel for fan high speed motor overload, fan low speed motor overload and basin heater failure. An audible and visual alarm is provided on the Annunciator Panel located in the Switchgear Room for each cooling tower control panel failure.

The jacket water butterfly valves are provided with OPEN and CLOSE indicating lights located at each valve.

Each Jacket Water Pump is provided with a running indicating light located on Motor Control Center MCC-92 and an audible and visual alarm located on the Annunciator Panel in the Switchgear Room for each jacket water pump failure. An elapsed time meter is provided for each jacket water pump on MCC-92.

Running and failure indications for each jacket water pump and failure indications for each cooling tower are transmitted to the Remote Transmission Unit in the Standby Power Facility Switchgear Room, which continuously scans and transmits the condition of all alarm points and running indications to the computer logger in the Process Control Room in the Main Pumping Station. Individual alarms and status are received and displayed by the computer logger.

C. STANDBY GENERATOR STARTING AIR SYSTEM: SPF-SAC-1 AND 2 AND SPF-SAR-1 AND 2

(1) DESCRIPTION (SEE FIGURE III-PO-SPF-2)

The standby generator starting air system is provided to automatically supply compressed air to the air starter motors of the diesel engines to start the standby generator equipment.

The standby generator starting air system consists of two air compressors, designated SPF-SAC-1 and 2, and two air receivers, designated SPF-SAR-1 and 2. Each air compressor is provided with an inlet air filter, a cooling system, and an automatic moisture separator. The starting air system also includes piping and fittings, air filters, pressure gauges, pressure switches, various manually and automatically operated valves, and low pressure alarms.

Each air compressor is a positive displacement, air cooled, horizontal, automatic unloading type compressor, driven by a 15 hp, 1,750 rpm, constant speed motor through a V-belt drive. Each air compressor has a working pressure rating of 250 psi. Both air receivers, when charged to 250 psi, are

capable of providing four complete starting cycles for each of the four standby generators and one future generator. A regulator is provided in the air supply line prior to the standby engine generators to regulate the pressure from 250 psi to 110 psi. Each air compressor can deliver 32.8 cfm of air at 250 psi to each air receiver.

(2) NORMAL OPERATION

A HAND-OFF-AUTO selector switch is provided for each air compressor on the Air Compressor Control Panel. During normal operation, when the HAND-OFF-AUTO selector switch for each air compressor is in the AUTO position, the air compressors operate automatically. When the HAND-OFF-AUTO selector switch for the first air compressor selected is placed in the AUTO position, that compressor will start as the lead air compressor and the other compressor becomes the lag unit. The pressure switches on the air receivers discharge pipe will automatically shut the lead air compressor off when the pressure in both air receivers reaches 250 psi. When the pressure drops below 250 psi, the lag air compressor will start and operate until the pressure reaches 250 psi in both air receivers. The lead and lag position of each air compressor will alternate after each operation.

(3) START-UP AND SHUTDOWN PROCEDURES

To start-up and shutdown the standby generator starting air system use the following procedures:

a. START-UP

- Close the circuit breakers for each air compressor on Motor Control Center MCC-92
- Close the circuit breaker for each air compressor mounted near the unit
- Open the manually operated valves necessary to supply compressed air to the air receivers and the standby generator equipment (see Figure III-PO-SPF-2)
- Place the HAND-OFF-AUTO selector switch at the Air Compressor Control Panel in the AUTO position for both air compressors, with the desired lead compressor being set first

b. SHUTDOWN

- Place the HAND-OFF-AUTO selector switch at the Air Compressor Control Panel in the OFF position

NOTE

If the maintenance is to be performed on an air compressor, close the manually operated valves necessary to isolate the equipment, place the HAND-OFF-AUTO switch in the OFF position and open the circuit breaker either at the air compressor or on MCC-92. Follow approved **Lockout/Tagout** procedures (See Chapter VI, Safety).

(4) ALTERNATE OPERATION

The selected air compressor will run continuously when the HAND-OFF-AUTO selector switch located on the Air Compressor Control Panel is in the HAND position.

(5) MONITORS AND ALARMS

An air pressure gauge is provided on each air receiver. A low pressure alarm switch and a high pressure shutdown switch are provided on the air receiver's discharge pipe. Each air compressor is provided with an air pressure switch. A running indicating light for each air compressor is provided on the Air Compressor Control Panel. There is an audible and visual alarm on the Annunciator Panel in the Switchgear Room for each air compressor failure and for starting air low pressure.

Air Compressor failure indications and low starting air pressure indications are transmitted to the Remote Transmission Unit in the Standby Power Facility Switchgear Room, which continuously scans and transmits the condition of all alarm points and running indications to the computer logger in the Process Control Room in the Main Pumping Station. Individual alarms and status are received and displayed by the computer logger.

D. STANDBY GENERATOR FUEL OIL SUPPLY SYSTEM: SPF-ST-3 AND 4, SPF-FOP-1 AND 2 AND SPF-FOC-1, 2, 3 AND 4

(1) DESCRIPTION (SEE FIGURE III-PO-SPF-3)

The standby generator fuel oil system is provided to automatically supply fuel oil to the fuel oil day tank at the Standby Power Facility.

The fuel oil supply system consists of two underground fuel oil storage tanks, designated SPF-ST-3 and 4, two fuel oil pumps, SPF-FOP-1 and 2, and a fuel oil day tank. The fuel oil supply system also includes fuel oil coolers, SPF-FOC-1, 2, 3 and 4, piping and fittings, liquid level controls, vent lines, manual shutoff valves, overfill prevention valve, filters, strainers and pressure relief valves.

Each fuel oil storage tank is a dual wall underground tank with a 12,000 gallon capacity. Each tank is 37 feet, 1/2 inches long and 8 feet in diameter. The fuel oil day tank has a 1,500 gallon capacity. The day tank is 9 feet long with a diameter of 5 feet, 4 1/2 inches.

The fuel oil pumps are 3 hp, 1200 rpm, 3-phase, 460 volts and 60 hertz, with a capacity of 29 gpm. Each fuel oil cooler has fans with 3/4 hp, 3450 rpm, 3 phase, 460 volts and 60 hertz motors.

(2) NORMAL OPERATION

Each fuel oil supply pump is provided with a HAND-OFF-AUTO selector switch on the Day Tank Control Panel, a pump duty transfer switch on MCC-92, and an ON/OFF selector switch with a START pushbutton at the unit.

Under normal operation, when the pump duty transfer switch on MCC-92 is set in Position 1 or 2 to select Fuel Oil Pump SPF-FOP-1 or 2 for operation and the HAND-OFF-AUTO selector switches at the Day

Tank Control Panel are in the AUTO position, the designated fuel oil pump will start and stop automatically to maintain the desired oil level in the fuel oil day tank.

Each fuel oil cooler has a START pushbutton and an ON/OFF-LOCKOUT selector switch located at each unit and a HAND-OFF-AUTO selector switch located on MCC-92. Under normal operation, the ON/OFF selector switch should be placed in the ON position and the HAND-OFF-AUTO selector switch should be placed in the AUTO position and the fuel oil coolers will run automatically when the standby engine generators are in operation.

(3) START-UP AND SHUTDOWN PROCEDURES

To start-up and shutdown the standby generator fuel oil supply system use the following procedures:

a. START-UP

- Open the manually operated valves in the suction and discharge line of the selected fuel oil pump(s) (see Figure III-PO-SPF-3)
- Open the manually operated valves at the top and bottom of the level sight gauge and at the level switch lines on the fuel oil day tank (see Figure III-PO-SPF-3)
- Close the circuit breaker for the fuel oil pumps and fuel oil coolers on Motor Control Center MCC-92
- Select Fuel Oil Pump SPF-FOP-1 or 2 for service by placing the pump duty transfer switch at MCC-92 in the desired position
- Place the ON/OFF selector switch at the selected fuel oil pump in the ON position
- Place the HAND-OFF-AUTO selector switch for both fuel oil pumps on the Day Tank Control Panel in the AUTO position
- Place the ON/OFF-LOCKOUT selector switch for each fuel oil cooler in the ON position
- Place the HAND-OFF-AUTO selector switch for each fuel oil cooler on MCC-92 in the AUTO position

b. SHUTDOWN

- Place the HAND-OFF-AUTO selector switch for each fuel oil pump at the Day Tank Control Panel in the OFF position
- Or place the ON/OFF-LOCKOUT selector switch located at each fuel oil pump in the OFF position
- Place the HAND-OFF-AUTO selector switch for each fuel oil cooler on MCC-92 in the OFF position

NOTE

If maintenance is to be performed on the fuel oil pumps, place the HAND-OFF-AUTO selector switch for the fuel oil pump at the Day Tank Control Panel in the OFF position, place the ON/OFF-LOCKOUT selector switch at the pump

in the OFF-LOCKOUT position, close the manually operated suction and discharge valves, and open the circuit breaker at MCC-92. Follow approved **Lockout/Tagout** procedures (See Chapter VI, Safety).

(4) ALTERNATE OPERATION

When the HAND-OFF-AUTO selector switch for the selected pump at the Day Tank Control Panel is in the HAND position, the pump will run continuously when the START pushbutton located at the pump is pressed.

The fuel oil coolers can be controlled manually by placing the HAND-OFF-AUTO selector switch on MCC-92 in the HAND position and pressing the START pushbutton located at each unit. The fuel oil cooler(s) will then run continuously.

(5) MONITORS AND ALARMS

A running indicating light is provided for each fuel oil pump at the Day Tank Control Panel. An elapsed time meter and an operational indicating light are provided for each fuel oil pump and fuel oil cooler at MCC-92.

A magnetic flow meter with a volume indicator is provided prior to the fuel oil day tank which measures and indicates the amount of fuel oil that is transferred by the fuel oil pump(s) to the day tank.

The Annunciator Panel in the Switchgear Room will be activated for the failure of each fuel oil pump, designated SPF-FOP-1 and 2, for fuel oil day tank water in fuel and for fuel oil day tank high and low level.

The Annunciator Panel will also be activated when any failure occurs in the underground fuel oil storage tanks, underground fuel oil carrier pipes and when the high liquid level and low liquid level in the underground fuel oil storage tanks are reached. The underground fuel oil storage tanks and the underground fuel oil carrier pipes have double walls and have monitors to detect any fuel oil leakage through the inner wall or groundwater leakage through the outer wall. If any leakage does occur in either the underground storage tanks or in the carrier pipes, a signal will be sent to the Fuel Oil Storage Tank No. 1 and No. 2 Monitoring Panel located in the Lube and Fuel Oil Storage Area near the fuel oil day tank and to the Annunciator located in the Standby Power Facility Switchgear Room.

A visual, digital level monitor, indicating the volume of fuel oil stored in each underground fuel oil storage tank is provided on the Fuel Oil Storage Tank No. 1 and No. 2 Monitoring Panel located near the fuel oil day tank in the Standby Power Facility. Setpoints for high and low fuel oil levels in each underground fuel oil storage tank can be adjusted on the Fuel Oil Storage Tank No. 1 and No. 2

Monitoring Panel. The low fuel level setpoint is typically set at 12 inches above the bottom of each underground fuel oil storage tank.

Fuel oil pump running and failure indications, underground fuel storage tank and fuel day tank level indications, water in day tank alarm and underground storage tank and carrier pipe failure alarms are transmitted to the Remote Transmission Unit in the Standby Power Facility Switchgear Room, which continuously scans and transmits the condition of all alarm points and running indications to the computer logger in the Process Control Room in the Main Pumping Station. Individual alarms and status are received and displayed by the computer logger.

E. STANDBY GENERATOR LUBE OIL SUPPLY SYSTEM: SPF-LOP-1 AND SPF-WOP-1

(1) DESCRIPTION (SEE FIGURE III-PO-SPF-4)

The standby generator lube oil supply system is provided to manually supply fresh lube oil from the fresh lube oil storage tank to each engine generator and to deliver waste lube oil from each engine generator to the waste lube oil storage tank at the Standby Power Facility.

The lubrication oil supply system consists of fresh and waste lube oil storage tanks, fresh and waste lube oil gear pumps, designated SPF-LOP-1 and SPF-WOP-1, fresh lube oil magnetic meter, lube oil filters, pressure gauges, pressure switches, pressure relief valves, other valves and piping. Each lubrication oil storage tank has a capacity of 550 gallons.

Each gear pump for the fresh lubrication oil and the waste lubrication oil system has a capacity of 10 gpm, with a motor rated at 2 hp, speed of 1200 rpm, 460 volts, 3-phase and 60 hertz.

Sight level gauges have been provided for the fresh and waste lube oil tanks to determine the lube oil inventory in the tank. A vent and an emergency relief valve have also been provided for each lube oil tank.

(2) NORMAL OPERATION

The fresh lube oil storage tank is filled from a service connection with a quick disconneet coupling loeated at the north side of the Lube Oil Storage Area in the Standby Power Facility.

The fresh lubrication oil pump, designated SPF-LOP-1, is provided with an ON-OFF selector switch and a TEST pushbutton located near the pump and a PUSH-PULL OPERATOR CONTACT switch located at each engine generator.

Under normal operation, when the ON-OFF selector switch is in the ON position and the PUSH-PULL OPERATOR CONTACT switch located on the selected engine generator is pushed to close the contact, the fresh lube oil pump is running.

The waste lubrication oil pump, designated SPF-WOP-1, is provided with an ON/OFF selector switch and a TEST pushbutton located near the pump.

The waste lube oil pump is provided to transfer the waste lube oil from each engine generator to the waste lube oil storage tank, or to deliver the waste lube oil from the waste lube oil storage tank to the service connection, which is provided with a quick disconnect coupling, located at the north side of the Lube Oil Storage Area in the Standby Power Facility.

Under normal operation the waste lube oil pump will run continuously when the ON/OFF selector switch located near the pump is in the ON position.

(3) START-UP AND SHUTDOWN PROCEDURE

To start-up and shutdown the standby generator lube oil system use the following procedures:

a. START-UP

Fresh Lube Oil Pump, designated SPF-LOP-1:

- Close the circuit breaker for the fresh lube oil pump on the Motor Control Center MCC-92
- Open all manually operated valves
- Place the ON-OFF selector switch located near the pump in the ON position
- Push the PUSH-PULL OPERATOR CONTACT switch located on the designated standby engine generator.

Waste Lube Oil Pump, designated SPF-WOP-1:

- Close the circuit breaker for the waste lube oil pump on the Motor Control Center MCC-92
- Open all manually operated valves
- Place the ON-OFF selector switch located near the pump in the ON position

b. SHUTDOWN

Fresh Lube Oil Pump, SPF-LOP-1:

- Pull the PUSH-PULL OPERATOR CONTACT switch located on the designated standby engine generator
- Place the ON/OFF selector switch located near the pump in the OFF position

Waste Lube Oil Pump, SPF-WOP-1:

- Place the ON/OFF selector switch located near the pump in the OFF position

(4) MONITORS AND ALARMS

The fresh lube oil supply system is provided with a high discharge pressure switch, and a lube oil tank float switch. A lube oil level sight gauge is provided for the engine generator fresh lube oil reservoir at each engine generator. A RESET pushbutton, an elapsed time meter and a red running light are provided at Motor Control Center MCC-92. In the event of pump failure, high pump discharge pressure or lube oil tank low level, an audible and visual alarm designated for each event will be activated on the Annunciator Panel located in the Switchgear Room in the Standby Power Facility.

The waste lube oil supply system is provided with a high pump discharge pressure switch and a waste oil tank float switch. In the event of pump failure, high pump discharge pressure and waste oil tank high level, audible and visual alarms are activated on the Annunciator Panel located in the Switchgear Room in the Standby Power Facility. A red running light is provided at Motor Control Center MCC-92.

Fresh and waste lube oil pump running, high pump discharge pressure and pump failure indications, fresh lube oil low level and waste lube oil tank high level indications are transmitted to the Remote Transmission Unit in the Standby Power Facility Switchgear Room, which continuously scans and transmits the condition of all alarm points and running indications to the computer logger in the Process Control Room in the Main Pumping Station. Individual alarms and status are received and displayed by the computer logger.

F. EXHAUST GAS SILENCER

A weatherproof exhaust gas silencer has been provided for each standby engine generator located at the Standby Power Facility to silence engine noise in the exhaust gas. The silencers are 50" in diameter and 149" long with a 18" side inlet and 18" top outlet. The silencers are covered with 2 inches of insulation and have a stainless steel outer shell.

G. ELECTRIC WATER HEATER AND WASH FOUNTAIN

A wash fountain is provided in the Truck Bay along the west wall of the Standby Power Facility. The wash fountain is a 54" semicircle with foot control and a soap dispenser. An electric water heater is provided to produce hot water for the wash fountain. The water heater is 3 KW, 1 phase, 480 V and 60 Hz, with a 5 gallon capacity and 150 psi working pressure (see Figure III-PO-SPF-5). The water heater is provided with START and STOP pushbuttons and a running indicating light located near the unit.

H. PLANT AIR (SEE FIGURE III-SU-UPS-I THROUGH 3)

Plant Air is provided from the Main Pumping Station to various areas of the Standby Power Facility. The associated equipment found in the Standby Power Facility consists of piping and fittings, valves, and moisture separators (see Figure III-PO-SPF-5).

I. PLANT WATER (SEE FIGURE III-SU-UPS-4)

Plant Water is provided from the Main Pumping Station to the chemical solution tank and the cooling towers in the Standby Power Facility for the external engine waste heat cooling system. The associated equipment found in the Standby Power facility includes piping and fittings, valves and hoses (see Figure III-PO-SPF-5).

The plant water equipment provides make-up water to the cooling towers for use in the jacket water system and to the chemical feed tank to be mixed to form the diluted chemical feed for the jacket water system.

J. CITY WATER (SEE FIGURE III-SU-UPS-4)

City Water is provided at the Standby Power Facility for the Wash Fountain. The city water equipment includes pipes, fittings and valves. For further information on the wash fountain, refer to the subsection herein titled "Electric Water Heater and Wash Fountain" (see Figure III-PO-SPF-5).

K. HOISTING EQUIPMENT: SPF-OC-1 AND 2

(1) DESCRIPTION

The Hoisting Equipment in the Standby Power Facility consists of an overhead crane, designated SPF-OC-1, and a monorail hoist, designated SPF-OC-2. The overhead crane (SPF-OC-1) has a 10-ton capacity with a motor operated, single girder, two speed, top running bridge crane, a 15/5 hp and 3600/1800 rpm hoist, 0.75/0.25 hp and 1800/600 rpm trolley and 1/0.33 hp and 1800/600 rpm bridge. The crane has 17'-4" available lift and serves the Engine Generator Room. The monorail hoist (SPF-OC-2) has a 2 ton capacity with a manually operated monorail hoist, which has 9'-2 1/4" available lift. The monorail hoist serves the Starting Air Compressor Room.

(2) NORMAL OPERATION

The overhead top running crane, designated SPF-OC-1, is provided with a circuit breaker located on MCC-92 and a control station with pushbuttons to control the hoist, trolley, and bridge motors. A mechanical load brake to provide controlled lowering speed and an overload device to prevent lifting of excessive overloads are also provided.

The control station is provided with START, STOP, HOIST UP, HOIST DOWN, TROLLEY LEFT, TROLLEY RIGHT, BRIDGE FORWARD and BRIDGE REVERSE pushbuttons to operate the motor operated hoisting equipment.

WARNING

If the hook does not raise when the HOIST UP pushbutton is pressed, severe hoist damage or a dropped load may result.

The monorail hoist, designated SPF-OC-2, is a manually operated chain hoist with hand gears and includes a mechanical brake to provide controlled lowering.

(3) MONITORS AND ALARMS

The overhead crane is provided with a power on indicator light at its control station.

L. SUMP PUMP: SPF-SP-1

The sump pumping equipment in the Standby Power Facility consists of one sump pump and associated 8 hp motor, designated SPF-SP-1, control panel, cover plates and frames and sump level controls (see Figure III-PO-SPF-5). An audible and visual alarm for sump high level and sump pump failure is provided at the Annunciator located in the Switchgear Room.

The sump pump is located along the west wall in the Lube Oil Storage Area in the Standby Power Facility.

For a complete discussion of the sump pumping equipment, operation and controls, refer to the section headed "Sump Pumping Equipment".

M. VENTILATING AND AIR CONDITIONING EQUIPMENT: SPF-REF-1, 2, 3, 4 AND 5, SPF-REF-6 AND SPF-AC-1

(1) DESCRIPTION (SEE FIGURE III-PO-SPF-6)

The Ventilating and Air Conditioning Equipment in the Standby Power Facility consists of five roof exhaust fans, designated SPF-REF-1, 2, 3, 4 and 5, one exhaust roof ventilator, designated SPF-REF-6, and one air conditioning unit, designated SPF-AC-1.

The five roof exhaust fans, SPF-REF-1, 2, 3, 4 and 5, serve the Engine Generator Room. The fans are 60 inches in diameter, V-belt drive, with 15 hp, 2 speed, 2 winding, 1750/1150 rpm, 480 V, 3 phase and 60 Hz motors. The ventilating capacity of each fan is 56,000 cfm. The fans draw air into the Engine Generator Room through intake louvers located on the south side of the building at elevation 33'-0".

The exhaust roof ventilator, SPF-REF-6, serves the Starting Air Compressor Room. The ventilator is V-belt drive, 1/2 hp, 826 rpm, 460 V, 3 phase and 60 Hz, with a 3080 cfm ventilating capacity. Air is drawn into the Starting Air Compressor Room through the intake louvers located on the south side of the building at elevation 12'-0".

The air conditioning unit, SPF-AC-1, consists of a water-to-air heat pump that functions as a year-round air conditioning system for the Switchgear Room in the Standby Power Facility. The heat pump is provided with an indoor thermostat for automatic changeover from cooling to heating in conjunction with continuous indoor blower operation. The cooling capacity is 174,100 Btu/hr and the heating capacity is 203,500 Btu/hr at air flows of 4,800 cfm. The heat pump includes 1 inch thick disposable filters.

(2) NORMAL OPERATION

The roof exhaust fans at the Standby Power Facility, SPF-REF-1, 2, 3, 4 and 5, are each provided with an AUTO-OFF-HI-LO selector switch on the Temperature Control Panel located in the Switchgear Room and an ON/OFF selector switch and high and low TEST pushbuttons at each unit. Under normal operation, the ON/OFF selector switch is in the ON position and the AUTO-OFF-HI-LO selector switch is in the AUTO position. The exhaust fans will then ventilate the Engine Generator Room as controlled by 2-stage thermostats located on the north side of the Engine Generator Room. When the temperature reaches the low set point on the thermostat, the fan will operate at low speed. When the temperature reaches the high set point on the thermostat, the fan will operate at high speed.

The exhaust roof ventilator for the Starting Air Compressor Room in the Standby Power Facility, SPF-REF-6, is provided with a HAND-OFF-AUTO selector switch located on the Temperature Control

Panel located in the Switchgear Room and an ON/OFF selector switch and a TEST pushbutton at the unit. Under normal operation, the ON/OFF selector switch is in the ON position and the HAND-OFF-AUTO selector switch is in the AUTO position. The exhaust roof ventilator ventilates the Air Compressor Room and is controlled by the thermostat located in the Air Compressor Room.

The air conditioning unit at the Standby Power Facility, SPF-AC-1, includes an ON/OFF switch at the unit and a HAND-OFF-AUTO selector switch at the Temperature Control Panel located in the Switchgear Room. Under normal conditions, the ON/OFF switch at the unit is in the ON position and the HAND-OFF-AUTO selector switch is in the AUTO position. The heat pump will be automatically controlled by the room thermostat located next to the Temperature Control Panel in the Switchgear Room.

(3) START-UP AND SHUTDOWN PROCEDURES

To start-up and shutdown the ventilating and air conditioning equipment, use the following procedures.

a. START-UP

1. Roof Exhaust Fans: SPF-REF-1, 2, 3, 4 and 5
   - Close the circuit breakers on Motor Control Center MCC-92
   - Set the high and low set points on the related thermostat for the desired temperature
   - Place the ON/OFF selector switch at the unit in the ON position
   - Place the AUTO-OFF-HI-LO selector switch on the Temperature Control Panel in the AUTO position

2. Exhaust Roof Ventilator: SPF-REF-6
   - Close the circuit breaker on MCC-92
   - Set the related thermostat for the desired temperature
   - Place the ON/OFF selector switch at the unit in the ON position
   - Place the HAND-OFF-AUTO selector switch on the Temperature Control Panel in the AUTO position

3. Air Conditioning Unit: SPF-AC-1
   - Close the circuit breaker on MCC-92
   - Set the related thermostat for the desired temperature
   - Place the ON/OFF switch at the unit in the ON position
   - Place the HAND-OFF-AUTO selector switch on the Temperature Control Panel in the AUTO position

b. SHUTDOWN

1. Roof Exhaust Fans: SPF-REF-1, 2, 3, 4 and 5
   - Place the AUTO-OFF-HI-LO selector switch on the Temperature Control Panel in the OFF position

NOTE

If maintenance is to be performed on the roof exhaust fans, open the associated circuit breaker, place the HAND-OFF-HI-LO selector switch on the Temperature Control Panel in the OFF position and place the ON/OFF selector switch at the unit in the OFF position. Follow approved **Lockout/Tagout** procedures (See Chapter VI, Safety).

2. Exhaust Roof Ventilator: SPF-REF-6
   - Place the HAND-OFF-AUTO selector switch on the Temperature Control Panel in the OFF position

NOTE

If maintenance is to be performed on the ventilator, open the associated circuit breaker, place the HAND-OFF-AUTO selector switch on the Temperature Control Panel in the OFF position and place the ON/OFF selector switch at the unit in the OFF position. Follow approved **Lockout/Tagout** procedures (See Chapter VI, Safety).

3. Air Conditioning Unit: SPF-AC-1
   - Place the HAND-OFF-AUTO selector switch on the Temperature Control Panel in the OFF position

NOTE

If maintenance is to be performed on the air conditioning unit, open the associated circuit breaker at MCC-92, place the HAND-OFF-AUTO selector switch on the Temperature Control Panel in the OFF position and place the ON/OFF switch at the unit in the OFF position. Follow approved **Lockout/Tagout** procedures (See Chapter VI, Safety).

(4) ALTERNATE OPERATION

The Ventilation and Air Conditioning Units can be controlled manually as follows:

a. Roof Exhaust Fans: SPF-REF-1, 2, 3, 4 and 5
Place the AUTO-OFF-HI-LO selector switch on the Temperature Control Center in the HI or LO position. The fan(s) will run continuously.

b. Exhaust Roof Ventilator: SPF-REF-6
Place the HAND-OFF-AUTO selector switch on the Temperature Control Panel in the HAND position. The ventilator will run continuously.

c. Air Conditioning Unit: SPF-AC-1
Place the HAND-OFF-AUTO selector switch on the Temperature Control Panel in the HAND position. The air conditioning unit will run continuously.

(5) MONITORS AND ALARMS

The Exhaust Fans, SPF-REF-1, 2, 3, 4 and 5, are provided with FAST and SLOW indicating lights and elapsed time meters located on Motor Control Center MCC-92. Running indicating lights and audible and visual alarms are also provided on the Temperature Control Panel in the Switchgear Room.

The Roof Exhaust Ventilator, SPF-REF-6, is provided with a running indicating light and an elapsed time meter located on the Motor Control Center MCC-92. A running indicating light and audible and visual alarm are also provided on the Temperature Control Panel in the Switchgear Room.

The Air Conditioning Unit, SPF-AC-1, is provided with a running indicating light and audible and visual alarm on the Temperature Control Panel in the Switchgear Room

The Roof Exhaust Fans and Exhaust Roof Ventilator running and alarm indications are transmitted to the Remote Transmission Units in the Standby Power Facility Switchgear Room, which continuously scans and transmits the condition of all alarm points and running indications to the computer logger in the Process Control Room in the Main Pumping Station. Individual alarms and status are received and displayed by the computer logger.

N. POWER DISTRIBUTION

The power distribution system is shown in detail on the contract plans and various shop drawings. Refer to Table III-PO-SPF-1, Standby Power Facility - Facility Equipment Summary, for contract plan and shop drawing numbers which pertain to the power distribution system for the Standby Power Facility.

III-PR-JC1 JUNCTION CHAMBER AND METER VAULT NO. 1 AND ODOR CONTROL FACILITIES

A. GENERAL

Junction Chamber and Meter Vault No. 1 and Odor Control Facilities contain the following systems:

- Junction Chamber No. 1
- Sluice Gates
- Rectangular Butterfly Control Valves
- Air Blower Equipment
- Preaeration Tanks Exhaust Fan Equipment
- Flowmeter
- Scum Transfer Pumping Equipment
- Odor Control Facility
- Sump Pumping Equipment
- Oxygen and Combustible Gas Detection Systems
- Plant Air
- Plant Water
- City Water
- Effluent Water
- Wastwater Sampling Pumping Equipment
- Ventilation Equipment
- Power Distribution System

Sewage flows to Junction Chamber No. 1 through the Raw Sewage Pumping Station 36-inch Force Main, the relocated 54-Inch Seddon Island Force Main, the 48-inch Interbay Force Main, the 54-inch 26th Street Force Main and the 48-inch East Tampa Force Main (see Figure III-PR-JC1-1). After treatment in the preaeration tanks, for hydrogen sulfide removal, the sewage may be divided between Screen and Grit Buildings No. 1 and No. 2. The sewage flows to Screen and Grit Building No. 1 and 2 through two 72-inch conduits (see Figure III-PR-JC1-1).

Refer to Table III-PR-JC1-1, Junction Chamber and Meter Vault No. 1, Odor Control - Facility Equipment Summary, for control numbers, manufacturers, equipment capacities, and operation, maintenance, contract plan and shop drawing references. Refer to Division 4H7, Division 4L4 and Division 5H3A Contractor's O&M Manual for Manufacturer's Service Manuals pertaining to equipment located in Junction Chamber and Meter Vault No. 1.

B. PROCESS CONTROL - HYDROGEN SULFIDE REMOVAL

(1) DESCRIPTION

Removal of hydrogen sulfide, which is highly corrosive to treatment plant equipment and facilities, is provided by high intensity aeration in the influent channels and preaeration tanks of Junction Chamber No. 1. The hydrogen sulfide laden air is treated in the Odor Control Reaction Chambers with sodium hypochlorite (NaOCl) and sodium hydroxide (NaOH) to oxidize the hydrogen sulfide to a non-corrosive form and to absorb odorous compounds. The high intensity aeration also serves to keep all solids in suspension in the channels and preaeration tanks.

(2) PROCESS CONTROL - AERATION

Four blowers are provided to supply air for aeration of the influent and effluent channels and preaeration tanks of Junction Chamber No. 1. One blower is provided to serve each preaeration tank and the other serves as a standby for all Preaeration Tanks. The air requirement of the influent and effluent channels may be provided by one or all blowers.

To obtain maximum hydrogen sulfide removal from the influent sewage, all preaeration tanks and associated blowers are required to be in service at all times.

WARNING

When a preaeration tank is in service, its associated blower MUST be operating. Failure to do so will allow large solids to deposit on the bottom of the preaeration tank. If this occurs, the preaeration tank must then be taken out of service and the deposited solids removed manually.

C. JUNCTION CHAMBER NO. 1

(1) DESCRIPTION

Junction Chamber No. 1 consists of two enclosed aerated influent channels, three enclosed aerated preaeration tanks and two enclosed aerated effluent channels.

Preaeration Tanks Nos. 1 and 2 are 25 feet wide and Preaeration Tank No. 3 is 30 feet wide. Each preaeration tank is 66 feet long and has a liquid depth which varies between 16.25 feet at minimum flows and 19.91 feet at the maximum flow rate. The tanks are located adjacent to each other and are of common wall construction.

The air space above the enclosed influent channels, preaeration tanks and aerated effluent channels is provided with a protective lining, which extends below the minimum liquid level. This protective lining serves to prevent damage due hydrogen sulfide corrosion. Rectangular Butterfly Valves, JC1-RBV-1, 2 and 3 (see Figures III-PR-JC1-1 and 2) are provided to permit hydrogen sulfide laden air and scum to pass from the influent channels into the preaeration tanks. An odor control system, is provided to treat the hydrogen sulfide laden air from Junction Chamber No. 1 and is described in the section headed "Odor Control Facility." Exhaust fans, as described in the subsection headed "Preaeration Tanks Exhaust Fan Equipment", are provided to remove the hydrogen sulfide laden air from the preaeration tanks during events when the Odor Control Facility is out of service. Sluice Gates JC1-SG-9, 10 and 21 are provided to permit scum to pass from the preaeration tanks to the effluent channels for removal as described in the subsection headed "Sluice Gates".

When all preaeration tanks are in service, the displacement periods at a flow rate of 96 mgd (design annual average flow), 128.6 mgd (design maximum rate) and 220.8 mgd (at peak conditions) are 10.1

minutes, 7.5 minutes, and 4.4 minutes, respectively. Refer to Table II-GT-1, Bases of Design, for other design criteria.

Stop Log grooves have been provided in the influent and effluent channels to permit isolation of sluice gates and air diffuser manifolds for maintenance purposes (see Figure III-PR-JC1-1).

(2) NORMAL OPERATION

Under normal operation, all preaeration tanks and associated equipment are required to be in service.

(3) START-UP, SHUTDOWN AND DEWATERING PROCEDURES

To start up, shut down and dewater a preaeration tank, use the following procedures:

a. START-UP

- Select the preaeration tank(s) to be put into operation (see Figure III-PR-JC1-1).

- Open influent Sluice Gates JC1-SG-1 and 2 and Rectangular Butterfly Valve JC1-RBV-1 for Preaeration Tank No. 1, or influent Sluice Gates JC1-SG-3 and 4 and Rectangular Butterfly Valve JC1-RBV-2 for Preaeration Tank No. 2, or influent Sluice Gates JC1-SC-17 and 18 and Rectangular Butterfly Valve JC1-RBV-3 for Preaeration Tank No. 3.

- Open effluent Sluice Gates JC1-SG-5 and 6 for Preaeration Tank No. 1, or effluent Sluice Gates JC1-SG-7 and 8 for Preaeration Tank No. 2, or effluent Sluice Gates JC1-GS-19 and 20 for Preaeration Tank No. 3.

- Start up the following associated equipment as described elsewhere in this section: Air Blower Equipment and Odor Control System or preaeration tanks Exhaust Fans.

b. SHUTDOWN

- Close influent Sluice Gates JC1-SG-1 and 2 and Rectangular Butterfly Valve JC1-RBV-1 for Preaeration Tank No. 1, or influent Sluice Gates JC1-SG-3 and 4 and Rectangular Butterfly Valve JC1-RBV-2 for Preaeration Tank No. 2, or influent Sluice Gates JC1-SG-17 and 18 Rectangular Butterfly Valve JC1-RBV-3 for Preaeration Tank No. 3.

- Close effluent Sluice Gates JC1-SG-5 and 6 for Preaeration Tank No. 1, or effluent Sluice Gates JC1-SG-7 and 8 for Preaeration Tank No. 2, or effluent Sluice Gates JC1-SG-19 and 20 for Preaeration Tank No. 3.

- Shut down the following associated equipment as described elsewhere in this section: Air Blower Equipment and Odor Control System or preaeration tanks Exhaust Fans.

NOTE

Do not shutdown the odor control system when one or more preaeration tanks remain in service.

c. DEWATERING

- Shut down the tank to be dewatered as described above.

- Open Sluice Gate JC1-SG-13, 14 or 22 to dewater Preaeration Tank No. 1, or No. 2, or 3, respectively.

NOTE

The preaeration tank will completely dewater by gravity. The sewage flows through a 12-inch drain to the 54-inch Main Outlet Interceptor (see Figure III-PR-JC1-1).

(4) MONITORS AND ALARMS

The depth of liquid in the effluent channels of Junction Chamber No. 1 is continuously monitored by a bubbler type liquid level measuring system. The liquid level is continuously transmitted to the Computer Logger in the Process Control Room in the Main Pumping Station by the Remote Transmission Units in the Junction Chamber No. 1 Electrical Room. The Remote Transmission Units continuously scan and transmit the condition of all alarm points to the Computer Logger in the Process Control Room in the Main Pumping Station. Individual alarm and status information is displayed by the computer logger.

The annunciator at Motor Control Center MCC-27 contains an audible and visual alarm for high water level.

D. SLUICE GATES: JC1-SG-1, 2, 3, 4, 5, 6, 7, 8, 9, 10, 11, 12, 13, 14, 15, 16, 17, 18, 19, 20, 21 AND 22

(1) DESCRIPTION

Sluice gates are provided to control sewage and/or scum flow into, through and out of the Preaeration Tanks and Flowmeter MS-1 in Junction Chamber and Meter Vault No. 1. Table III-PR-JC1-2 indicates the Contract Plan designation number, size, type of operator and function of the sluice gates.

(2) NORMAL OPERATION

a. SLUICE GATES JC1-SG-1, 2, 3, 4, 5, 6, 7, 8, 15, 16, 17, 18, 19 AND 20

Sluice Gates JC1-SG-1 and 2 are located in Influent Channel No. 2 and control flow to Preaeration Tank No. 1. Sluice Gates JC1-SG-3 and 4 are located in Influent Channel No. 2 and control flow to Preaeration Tank No. 2. Sluice Gates JC1-SG-17 and 19 are located in Influent Channel No. 2, and control flow to Preaeration Tank No. 3. When all Preaeration tanks are in service all six gates are required to be open.

Sluice Gates JC1-SG-5 and 6 are located in Effluent Channel No. 1 and control flow from Preaeration Tank No. 1. Sluice Gates JC1-SG-7 and 8 are located in Effluent Channel No. 1 and control flow from Preaeration Tank No. 2. Sluice Gates JC1-SG-19 and 20 are located in Effluent Channel No. 1 and control flow from Preaeration Tank No. 3. When all preaeration tanks are in service all six gates are required to be open.

Sluice Gate JC1-SG-15 is located upstream of Flowmeter MS-1 and operates as a throttling valve to control flow through the meter (refer to the subsection headed "Flowmeter").

Sluice Gate JC1-SG-16 is located in Effluent Channel No. 2 and controls flow to Screen and Grit Building No. 2 and is normally open.

Sluice Gates JC1-SG-1, 2, 3, 4, 5, 6, 7, 8, 16, 17, 18, 19 and 20 are intended to be completely open or completely closed, are motor operated and are provided with OPEN-CLOSE-STOP push buttons at each unit for local operation. Each gate is provided with OPEN-CLOSE push buttons and position indicating lights on the associated Motor Control Center, MCC-27 or MCC-27A.

Sluice Gate JC1-SG-15 is provided with a modulating electric motor operator with a two-position selector switch marked AUTO and MANUAL, OPEN-CLOSE push buttons and a handwheel for manual operation. The selector switch is provided with a keyed locking device. The locking device will not allow the selector switch to be moved without insertion of a key. When the selector switch is in the AUTO position, the motor operator is controlled by flow control instrumentation (refer to the subsection headed "Flowmeter"). When the selector switch is in the MANUAL position, the sluice gate is operable by either the OPEN-CLOSE push buttons or the handwheel.

b. SLUICE GATES JC1-SG-9, 10, 11, 12, 13, 14, 21 AND 22

Sluice Gates JC1-SG-9, 10 and 21 are manually operated down opening gates. Each gate is located in Effluent Channel No. 1 and is provided to control scum flow from Preaeration Tanks Nos. 1, 2 and 3, respectively. The gates are to be opened only when required to remove scum from the preaeration tanks.

Sluice Gates JC1-SG-11 and 12 are manually operated down opening gates. Each gate is located in Effluent Channel No. 2 and is provided to control scum flow from the effluent channels to the scum sump in Meter Vault No. 1. The gates are to be opened only when required to remove scum from the effluent channels.

NOTE

The required frequency of the scum removal operation will be determined from operating experience.

After scum has been removed from the effluent channels it is required that Sluice Gates JC1-SG-11 and 12 remain open for at least one minute to adequately flush the scum piping.

Sluice Gates JC1-SG-13, 14 and 22 are manually operated by means of a handwheel and are located in Preaeration Tanks No. 1, 2 and 3, respectively. The gates are provided to permit dewatering of

their associated tank. Each /tank dewaters by gravity to the Main Outlet Interceptor (see Figure III-PR-JC1-1).

(3) START-UP AND SHUTDOWN

The following procedures apply only to sluice gates with motor operators:

a. START-UP

- Close circuit breaker in Motor Control Center MCC-27 and/or MCC-27A, respectively.
- Push the OPEN or CLOSE button.

NOTE

Limit switches are provided to de-energize the motor operator when the gate arrives at the completely OPEN or CLOSED position.

b. SHUTDOWN

- Push the STOP button.

NOTE

If maintenance is to be performed on the unit, open the circuit breaker on MCC-27 and/or MCC-27A, respectively, and engage the locking device on the STOP button.

(4) ALTERNATE OPERATION

a. MANUAL OPERATION

Each motor operator is provided with a handwheel for manual operation as follows:

- Depress motor operator declutching lever.
- Turn handwheel counterclockwise to open or clockwise to close gate.

NOTE

Energizing the motor operator automatically disengages the declutching lever and returns the gate to motor operation.

(5) MONITORS

Torque switches are provided to de-energize the motor operator if the gate movement becomes obstructed. Refer to Division 4H7 and Division 5H3A Contractor's 0 & M Manual for manufacturer's literature that describes the setting and operation of the torque switches.

Each motor operated sluice gate is provided with a gate position indicator on its motor operator. In addition, position indicating lights are provided for Sluice Gates JC1-SG-1, 2, 3, 4, 5, 6, 7, 8, 17, 18, 19 and 20 on Motor Control Center MCC-27 and MCC-27A.

E. RECTANGULAR BUTTERFLY CONTROL VALVES: JC1-RBV-1, 2 AND 3

(1) DESCRIPTION

Rectangular butterfly control valves are provided to permit scum and hydrogen sulfide laden air to flow from the influent channels into the preaeration tanks.

(2) NORMAL OPERATION

Rectangular Butterfly Control Valves JC1-RBV-1, 2 and 3 regulate scum flow from Influent Channel No. 2 to preaeration Tanks No. 1, 2 and 3, respectively. The valves are manually operated by means of a handwheel. Turning the handwheel in the counterclockwise direction opens the control valve. When all preaeration tanks are in service, all rectangular butterfly valves are required to be in the open position.

F. AIR BLOWER EQUIPMENT: JC1-AB-1, 2, 3 AND 4

(1) DESCRIPTION

The Air Blower Equipment in Junction Chamber No. 1 is provided to supply air to the air diffusers in the preaeration tanks and influent and effluent channels. The Air Blower equipment consists of four Air Blowers, designated JC1-AB-1, 2, 3 and 4, intake filter-silencers, discharge silencers, manual unloading and pressure relief valves, pressure switches, manometers and piping and fittings (see Figure III-PR-JC1-2).

Each Air Blower is designed for trouble free operation over the following range of atmospheric conditions:

- Range of inlet air temperature: 32 to 100 degrees F
- Range of barometric pressure: 14.2 to 15.2 psia
- Range of inlet pressure: 13.9 to 14.9 psia
- Range of relative humidity: 0 to 100 percent

Air Blowers JC1-AB-1 and 2 have a rated capacity of 3,600 acfm of air at a rated discharge pressure of 8.9 psig, and Air Blowers JC1-AB-3 and 4 have a rated capacity of 4320 acfm of air at a rated discharge pressure of 8.7 psig, when the inlet air temperature is 100 degrees F, the relative humidity is 80 percent and the barometric pressure is 14.7 psia.

(2) NORMAL OPERATION

Air Blowers JC1-AB-1 and 2 are each provided with an ON-OFF switch with locking device for the OFF position at a convenient height near the unit. Each blower is provided with STOP-START push buttons and a red running indicating light and an elapsed time meter on Motor Control Center MCC-27. Air Blowers JC1-AB-3 and 4 are each provided with a START-STOP/LOCKOUT push button at the unit. Each blower is also provided with a START-STOP push button, a red running indicating light and an elapsed time meter on Motor Control Center MCC-27A. Under normal operation, when Preaeration Tanks No. 1 and No. 2 are in service, both Air Blowers JC1-AB-1 and 2 are required to be operating, and when Preaeration Tank No. 3 is in service, either Air Blower JC1-AB-3 or JC1-AB-4 is required to be operating.

(3) START-UP AND SHUTDOWN PROCEDURES

To start up or shut down the Air Blower Equipment use the following procedures:

a. START-UP

- Place the ON-OFF for JC1-AB-1 and 2, and START-STOP/LOCKOUT for JC1-AB-3 or 4 switch at the unit in the ON or START position.

- Start up the associated Odor Control System as described elsewhere in this section under the subsection headed "Odor Control Facility".

NOTE

For safety considerations and for proper removal of hydrogen sulfide laden air, it is intended that the Odor Control System be operational at all times when one or more Air Blowers are in service.

If the Odor Control System is out of service for any reason, it is intended that the associated Junction Chamber No. 1 exhaust fans be in operation to safely remove hydrogen sulfide laden air.

If the Odor Control System is not operating and the associated Junction Chamber No. 1 exhaust fan is not operating when an Air Blower is operational, air will exit the Junction Chamber via pressure relief valves in the Junction Chamber Deck. Some hydrogen sulfide laden air may also escape through other openings (such as floor drains) in the Junction Chamber Deck. In this case, follow the procedure below:

- Manually open the "Manual Unloading and Pressure Relief Valve" in the discharge piping.

- Push START button on Motor Control Center MCC-27 and MCC-27A, respectively.

- Manually close the "Manual Unloading and Pressure Relief Valve" in the discharge piping after the blower has come up to operating speed.

b. SHUTDOWN

- Push the STOP button on Motor Control Center MCC-27 for JC1-AB-1 and 2 and MCC-27A for JC1-AB-3 or 4.

NOTE

If maintenance is to be performed on a blower, open the circuit breaker on MCC-27 or MCC-27A, respectively, and place the ON-OFF or START-STOP switch at the unit to the OFF or STOP position and engage the locking device.

(4) MONITORS AND ALARMS

The Air Blowers are provided with a red running indicating light on Motor Control Center MCC-27 for JC1-AB-1 and 2; and MCC-27A for JC1-AB-3 and 4. Each Air Blower is provided with a manual

unloading pressure relief valve located in the discharge piping and a discharge pressure switch to alarm and shut down the unit on high discharge air pressure. Each blower is also provided with an inlet silencer differential pressure switch to alarm on high inlet silencer differential pressure.

The Remote Transmission Units in the Junction Chamber No. 1 Electrical Room continuously scan and transmit the condition of all alarm points and running indication to the Computer Logger in the Process Control Room in the Main Pumping Station. Individual alarms and status are displayed by the computer logger.

G. PREAERATION TANKS EXHAUST FAN EQUIPMENT: JC1-EF-1, 2 AND 3

(1) DESCRIPTION

The purpose of the preaeration tanks exhaust fan equipment is to remove hydrogen sulfide laden air from the preaeration tanks and to discharge the air into the atmosphere when the Odor Control System is out of service. The preaeration tanks exhaust fan equipment consists of Exhaust Fans JC1-EF-1, 2 and 3 and associated exhaust stacks.

(2) NORMAL OPERATION

Each Exhaust Fan is provided with an ON-OFF switch with locking device for the OFF position at a convenient operating height near each unit and START-STOP push buttons and red running indicator light on Motor Control Center MCC-27 for JC1-EF-1 and 2, and MCC-27A for JC1-EF-3.

Under normal operation, when a preaeration tank is in service, either the Odor Control System or its associated Exhaust Fans are required to be operating.

(3) START-UP AND SHUTDOWN PROCEDURES

To start up or shut down the preaeration tanks exhaust fan equipment, use the following procedures:

a. START-UP

- Place ON-OFF switch at unit in the ON position.
- Push START button for the Exhaust Fan on Motor Control Center MCC-27 for JC1-EF-1 and 2, and MCC-27A for JC1-EF-3.

b. SHUTDOWN

- Push STOP button for Exhaust Fan on Motor Control Center MCC-27 for JC1-EF-1 and 2, and MCC-27A for JC1-EF-3.

NOTE

If maintenance is to be performed on an exhaust fan, open the designated circuit breaker on MCC-27 or MCC-27A, respectively, and move the ON-OFF switch at the unit to the OFF position and engage the locking device. Follow approved **Lockout/Tagout** procedures (See Chapter VI, Safety).

(4) MONITORS AND ALARMS

Each fan is provided with a red running indicator light on Motor Control Center MCC-27 for JC1-EF-1 and 2, and on MCC-27A for JC1-EF-3.

H. FLOWMETER: MS-1

The flowmeter MS-1 was provided when the original Screen and Grit Building which served when the original primary plant was in operation. Since this building is not in service any longer, the flow meter MS-1 is out of service.

I. SCUM TRANSFER PUMPING EQUIPMENT: MV1-STP-1, OG-103

(1) DESCRIPTION

The scum transfer pump is provided to pump scum removed from the raw sewage as it flows through Junction Chamber No. 1 from the scum sump to Junction Chamber No. 3.

The scum pumping equipment consists of one Scum Transfer Pump and its associated drive unit, designated MV1-STP-1, a diaphragm type Liquid Level Sensing Transmitter, designated OG-103, and level controls on the level control panel.

The scum pump liquid level is transmitted to the Computer Logger in the Process Control Room in the Main Pumping Station by the Remote Transmission Unit in the Junction Chamber No. 1 Electrical Room.

(2) NORMAL OPERATION

The Scum Transfer Pump is provided with START-STOP push buttons with a locking device for the STOP push button and a TEST push button at the unit. The pump is provided with a HAND-OFF-AUTO selector switch, a red running indicator light, and an elapsed time meter on Motor Control Center MCC-27, with a blue power-on indicating light and a level indicator on the Level Control Panel.

Under normal operation, when the HAND-OFF-AUTO selector switch is in the AUTO position, the Scum Transfer Pump will start up at a preset high water level and will shut down at a preset low water level. A pneumatically operated plug check valve is located in the discharge line of the pump and opens automatically when the pump discharge pressure exceeds a preset value. For a detailed description of the operation of the plug check valves, see the section headed "Valves". The scum transfer pump is provided with a motion control variable speed V-belt drive to vary the pump speed and thereby the pump discharge capacity and head.

NOTE

The pump speed CAN BE ADJUSTED while the pump is operating.

Refer to Division 4H7 Contractor's O & M Manual for manufacturer's literature pertaining to the motion control variable speed V-belt drive. The pump speed is adjusted by turning the crank handle on the motion control motor base.

(3) START-UP AND SHUTDOWN PROCEDURES

To start up or shut down the Scum Transfer Pump, use the following procedures:

a. START-UP

- Make sure the Plant Air System is operating and open the valve required to supply air to the pneumatically operated pump discharge plug check valve.

- Make sure the Effluent Water System is operating and open the valves required to supply seal water to the pump and purge water to the pump discharge pressure switch diaphragm seal and purge water to the scum sump liquid level sensing transmitters diaphragm seal (OG-1O3).

- Open the manually operated pump suction valve.

- Depress the START push button at the pump (resets the circuit).

- Place HAND-OFF-AUTO selector switch on MCC-27 in AUTO position and the pump will automatically start and stop from level controls as described under "Normal Operation".

b. SHUTDOWN

- Place HAND-OFF-AUTO selector switch on Motor Control Center MCC-27 in the OFF position.

NOTE

If maintenance is to be performed on the scum pump, open the circuit breaker on MCC-27 and depress the STOP push button at the unit and engage the locking device. Follow approved **Lockout/Tagout** procedures (See Chapter VI, Safety).

(4) ALTERNATE OPERATION

The scum transfer pump may be operated manually as follows:

- Follow all start-up procedures listed hereinbefore except. Place the HAND-OFF-AUTO selector switches on MCC-27 in the HAND position.

- The pump will operate continuously in this position.

(5) MONITORS AND ALARMS

Scum sump level indication is provided on the level control panel. High and low level alarm conditions are relayed to the annunciator panel on MCC-27. Operational indicating lights are provided on MCC-27 and on the Level Control Panel. An elapsed time meter is provided for the pump on MCC-27.

J. ODOR CONTROL FACILITY

(1) GENERAL

The Junction Chamber No. 1 Odor Control Facility includes the following structures and equipment:

- Odor Control System
- Compressor Building

The Odor Control Facility is designed to treat odors from the Raw Sewage Pumping Station Screen Room and the Junction Chamber No. 1 (see Figure III-PR-JC1-5). Refer to Table III-PR-JC1-1, Junction Chamber Meter Vault No. 1 and Odor Control Facility Equipment Summary, for control numbers, manufacturers, equipment capacities, and operation, maintenance, contract plan and shop drawing references. Refer to Divisions 4L4 and 5H3A Contractor's O & M Manual for manufacturer's Service Manuals.

(2) ODOR CONTROL SYSTEM

a. DESCRIPTION

The odor control system is provided to remove odors from the air stream exhausted from the Raw Sewage Pumping Station Screen Room and Junction Chamber No. 1 Influent and Effluent Channels and Preaeration Tanks No. 1, 2 and 3.

The odor control equipment at Junction Chamber No. 1 consists of the following:

- Compressed air system consisting of three rotary screw type compressors and a vertical air receiver, control panel, air/oil separator and cooling system, pressure gauges, pressure switches.

- Three Reaction Chambers each with tangential top side entry and tangential bottom side exit equipped with an atomizing spray nozzle.

- Two FRP NaOCl storage tanks with liquid level transmitters and high/low level alarms and annunciators.

- Two steel NaOH storage tanks with liquid level transmitters and high/low alarm and annunciators.

- One 15,000 acfm exhaust fan located between Reaction Chamber No. 3 and Reaction Chamber No. 2 and one 45,000 acfm exhaust fan located in the exhaust duct. The first fan is provided to pull 15,000 acfm of air through the odor control Reaction Chamber No. 3 and out of the Preaeration Tanks No. 1, 2 and 3. The second fan is provided to pull air from all Reaction Chambers and to introduce the outside air (see Figure III-PR-JC1-3).

- An exhaust fan located in the Raw Sewage Pumping Station (RSPS) Screen Room.

- A Mist Eliminator installed in the reactors exhaust duct.

- Positive displacement, diaphragm type chemical feed pumps equipped with HAND-OFF-AUTO selector switches and frequency and stroke length adjustment dial knobs to permit manual adjustment of chemical feed rates up to the following:
  - 230 gph @ 12% in Concentration for NaOCl
  - 40 gph @ 50% in Concentration for NaOH

- One manually controlled positive displacement, diaphragm type sulfuric acid pump, 1 gph (maximum) at 100 psig with frequency and stroke length adjustment.

- Two pre-assembled chemical system dilution panels with gauges, regulators, meters and valves to dilute and deliver the required quantity of liquid chemicals to the Reaction Chambers and spent chemical neutralization chambers.

- pH and ORP sensor, analyzer/controller

- Sound attenuation equipment

- Exhaust fans

- Automatic chemical pacing control

- Odor control electric panel, wall mounted

Odorous air from the RSPS Screen Room (1630 cfm) is discharged to the covered influent channel of Junction Chamber No. 1 (see Figure III-PR-JC1-5). This air is pulled into each preaeration chamber and, together with the air from each preaeration chamber and the air from the effluent channel of Junction Chamber No. 1 is pulled by the exhaust fan JC1-OEF-1 through the odor control Reaction Chamber No. 3. This odorous air is then blown into Reaction Chamber No. 2 and 1 at a flow rate of 15,000 cfm.

Under normal operation, a diluted solution of Sodium Hydroxide (NaOH) is atomized into the Reaction Chambers Nos. 2 and 3 to solubilize and absorb H_2S and other odorous compounds. Under normal operation, a diluted solution of NaOH and NaOCl is atomized into Reaction Chamber No. 1. While a complex set of chemical reactions likely occurs, basically the NaOH solution provides a medium to solubilize and absorb most of the H_2S and other odorous compound. The NaOCl solution is provided in Reaction Chamber No. 1 to oxidize most of the remaining H_2S and other oxidizable compounds (which were not removed by the NaOH solution). No chemical is recirculated and spent chemical is drained to the spent chemical neutralization chambers, where a diluted solution of Sodium Hypochlorite (NaOCl) is added to oxidize the H_2S so it will not revolitilize (return to gas form) when the spent chemical is discharged to the wastewater stream.

The probes for pH analyzer/controllers continuously monitor the pH of discharged spent chemical from each Reaction Chamber and automatically adjust NaOH feed pump rates to maintain a set point pH. The probes for ORP analyzer/controller continuously monitors the ORP of the spent chemical at the neutralization chamber outlet and automatically adjusts NaOCl feed pump rates to maintain a set point ORP.

Additionally, a gas phase ORP analyzer/controller continuously monitors the ORP in the treated air from Reaction Chamber No. 1 and automatically adjusts NaOCl feed pump rates to maintain a set point ORP.

Soft water is used to make diluted chemical solution supplied to the atomizing spray nozzle in the Reaction Chambers. The chemical solution is filtered through a 50 micron filter to remove particulates which could cause plugging of the atomizing nozzle. Compressed air is supplied to the nozzle for chemical solution atomization. Chemicals are supplied by chemical metering pumps.

Under normal operation, when all three preaeration chambers are in service, 11,600 cfm of treated air from the odor control system will be recirculated to the suction of the air blowers (see Figure III-PR-JC1-5). The balance of the 15,000 cfm of treated air (3,400 cfm) will be discharged up the stack together with 41,600 cfm of outside air. Exhaust Fan JC1-OEF-2 is provided to discharge any combination of treated air and outside air, at a minimum flow rate of 45,000 cfm up the discharge stack.

NOTE

When less than three preaeration chambers are in service, the volume of treated air which is recirculated and discharged up the stack will vary according to the actual number and capacity of air blowers in service. The volume of outside air will also vary so that the total discharged up the stack will remain constant of about 45,000 cfm. No operator action is necessary as these flow splits occur automatically when air blowers are put into or taken out of service.

Alternatively, all air from the Odor Control Reaction Chambers at the rate of 15,000 cfm, can be mixed with outside air at a flow rate of 30,000 cfm and discharged through the discharge stack. The design criteria for the odor control equipment is as follows:

ODOR CONTROL EQUIPMENT DESIGN CAPACITY

RATING DATA	VALUE
Total Exhaust air flow rate - cfm	15,000 cfm
Exhaust air temperature - °F	
- Maximum	100
- Minimum	50
Exhaust air humidity - percent	
- Maximum	100
H_2S Concentration in raw exhaust air	
- PPM V/V	1,200
- Maximum	600
- Average	100
- Minimum	
H_2S Concentration in treated exhaust	
- @ Maximum H_2S concentration in raw air	4
- @ Average H_2S concentration in raw air	4
- @ Minimum H_2S concentration in raw air	1
Overall quality of treated exhaust air	
(H_2S and other odors treated - Adjusted Odor Units	
- @ Maximum H_2S concentration in raw air	N/A
- @ Average H_2S concentration in raw air	N/A
- @ Minimum H_2S concentration in raw air	75

b. NORMAL OPERATION

1. Water Softener

The water softeners are operated automatically, powered solely by the by kinetic energy of the water movement, thus, no electric power is needed.

2. Compressed Air System

A triplex manual selective, lead-lag, constant speed control air compressor system is provided to supply air to the spray nozzles for atomization of the liquid chemical stream in each Reaction Chamber (see Figure III-PR-JC1-6). Under normal operation conditions, any two of the three air compressors can be selected as lead units and both lead compressors run continuously when loaded to maintain air pressure in the receiver tank as described below. The overall system cycles under the following load and receiver tank pressure conditions:

Receiver Tank Pressure, psig	Action Initiated
85	Low Pressure Alarm
95	Start both lead compressors
105	Unload both lead and the lag compressors
120	High Pressure Alarm and Shutdown Compressors

The lag compressor will start (after adjustable time delay 5 to 15 seconds) upon any malfunction alarm shutdown (except high pressure alarm and shutdown) of either lead compressors.

Compressed air flow to the nozzles is controlled by the following devices:

- Solenoid valve to open and allow compressed air flow to the system.
- Air filter with a manually operated drain valve to remove particulates and condensed water.
- Air pressure regulator to maintain required compressed air pressure to the nozzles.
- Pressure gauge at the nozzles to indicate inlet air pressure to the nozzles.
- Oil coalescing filter to remove oil carry-over in the compressed air lines with a manually operated drain valve.

The air compressors are started locally by START ad STOP push buttons from controls on the compressors control panel. The air solenoid valves are controlled from the Odor Control Electrical Panel located in the Compressor Building.

(a) Air Compressor Sequencer Panel

The Air Compressor Sequencer Panel consist of a ON/OFF selector switch and a red running indicator light. The usual setting of the selector switch is in the ON position, which controls the position of each compressor as lead or lag automatically. A red light will be lit when the sequencer is running. When the selector switch is in the OFF position, each compressor is operated manually based on its internal pressure switch located on each air compressor unit.

WARNING

Due to the interconnection of the compressor control circuits with the sequencer, it is possible for voltage to be present in the sequencer control cabinet even though the sequencer is switched off.

To completely eliminate the control voltage, shut all compressors and sequencer off, both at the panel switch located on the Odor Control Electrical Control Panel and at the service disconnect.

NOTE

In the event of a sequencer malfunction, each compressor can be controlled by its internal pressure switch. To operate the system on the compressors' internal pressure switches, select the "OFF" position on the selector switch of the sequencer panel located on the Odor Control Electrical Panel.

NOTE

If one of the compressors requires maintenance or indicates malfunction, the other compressors will continue to be controlled by the sequencer. However, as long as one unit is operating, the other units may still have voltage in their control cabinets (see warning above).

(b) Air Solenoid Valve

The Air Solenoid Valve will be operated by a HAND-OFF-AUTO selector switch in the Odor Control Electrical Panel; the usual setting of this switch is AUTO. A red light is lit when the Solenoid Valve is open. In the switch HAND position, the Valve opens independent of other equipment. In the switch AUTO position, the Valve opens when the odor control system ON push button switch is energized. When the odor control system OFF push button switch is activated, the Solenoid Valve is interlocked with a time delay relay which is discussed later in the subsection titled "Time Delay Relay" in this Chapter.

(c) Air Pressure Switch

The Air Pressure Switch interlocks with the Chemical Metering Pumps (Sodium Hydroxide and Sodium Hypochlorite) so that when the air pressure falls below the set point, the Chemical Pumps will be shut off. At low air pressure, an amber light on the Odor Control Electrical Panel will be lit.

3. Sodium Hypochlorite System (Figure III-PR-JC1-6)

Sodium hypochlorite is stored in two 20,000 gallon fiberglass tanks. The tanks are equipped with high and low liquid level alarms.

The NaOCl pumps are controlled by means of a HAND-OFF-AUTO selector switch in the Odor Control Electrical Panel. In the HAND position, the pump can be controlled by the START-STOP push buttons on the pump. The pump capacity is also manually adjustable by means of the dial knobs, one for changing stroke length and the other for changing stroke frequency.

In the AUTO mode, the pump is controlled by the odor control system ON-OFF switch on the Odor Control Electrical Panel. The metering pump capacity is automatically adjusted by the automatic chemical pacing controls (ORP and chlorine sensors).

A red light in the Odor Control Electrical Panel is lit when the pump is running.

4. Sodium Hydroxide System (Figure III-PR-JC1-6)
Sodium hydroxide is stored in a 5,000 gallon steel tank and a 10,000 gallon FRP tank. The tanks are equipped with high and low liquid level alarms.

The NaOH pump is controlled by means of a HAND-OFF-AUTO selector switch in the Odor Control Electrical Panel. In the HAND position, the pump can be controlled by the START-STOP push buttons on the pump. The pump capacity is also manually adjustable by means of the dial knobs, one for changing stroke length and the other for changing stroke frequency.

In the AUTO mode, the pump is controlled by the odor control system ON-OFF switch on the Odor Control Electrical Panel. The metering pump capacity is automatically adjusted by the automatic pacing controls (pH sensor).

A red light in the Odor Control Electrical Panel is lit when the pump is running.

5. Acid Pump (Figure III-PR-JC1-6)
The acid pump is for cleaning only (maintenance tool) and is operated manually or automatically by an ON/OFF switch at the Odor Control Electrical Panel. A portable acid container in the Compressor Building is connected to the acid pump.

When the acid pump is running, both the Sodium Hydroxide and Sodium Hypochlorite Pumps must be turned to the OFF position. The acid pump switch at the Odor Control Electrical Panel is interlocked with both the Sodium Hydroxide and Sodium Hypochlorite Metering Pump switches.

A red light at the Odor Control Electrical Panel is lit when the pump is ON.

6. Pre-assembled Chemical System Dilution Panels

The Chemical Mixing Panels are provided to combine the measured amount of softened water with chemicals supplied for the nozzles by the NaOCl and NaOH pumps. The amount of softened water may be manually adjusted by the water pressure regulator. Softened water flow is measured by a flowmeter on the Chemical Mixing Panel. The total liquid flow should be approximately 20 - 24 gpm. Pressure gauges are provided on the Chemical Mixing Panel to indicate pressure in the NaOCL and NaOH lines.

The final chemical solution is filtered by the 50 micron filter on the panel. A sampling drain is provided for chemical solution testing.

7. Water Solenoid Valve

The Water Solenoid Valves are operated by a HAND-OFF-AUTO selector switch on the Odor Control Electrical Panel; the usual setting of this switch is on AUTO. A red light is lit when the Solenoid Valve is open. In the switch HAND position, the Valve will open independent of other equipment. In the AUTO position, the Valve will open when the Odor Control System on push button switch is energized. When the Odor Control System OFF push button switch is activated, the Solenoid Valve is interlocked with a time delay relay which is discussed below in the subsection titled "Time Delay Relay" in this Chapter.

8. Time Delay Relay

When the Odor Control System OFF push button switch is activated, it is desirable to flush the chemicals out of the lines before everything stops running. A Time Delay Relay allows the Water Solenoid Valve to remain open for one to two minutes. A second Time Delay Relay allows the Air Solenoid Valve to remain open an additional one or two minutes. When the Water and Air Solenoid Valves close, their respective red lights will go off.

NOTE

All lights on the Odor Control Electrical Panel have the "push to test" configuration.

9. Liquid Level Switches

The Chemical Storage Tanks have Liquid Level Switches. When the liquid level in the tank falls below the set point, the respective Chemical Pump for that Storage Tank shuts off. An amber light on the Odor Control Electrical Panel will be lit when its respective Chemical Storage Tank has liquid level below the set point.

10. pH Indication

A meter on the Odor Control Electrical Panel gives a direct read-out of the pH condition in each Reaction Chamber Drain. In addition, there are amber lights to indicate HIGH pH and LOW pH, when the pH is outside the normal operating range.

11. ORP Indication

A meter on the Odor Control Electrical Panel gives direct read-out of the ORP condition in the Reaction Chamber Drain Neutralization Tanks. In addition, there are amber lights to indicate HIGH ORP and LOW ORP, when the ORP is outside the normal operating range.

12. Exhaust Fans

The Exhaust Fans are provided to pull the air from the preaeration tanks and blown through the Reaction Chambers (JC1-OEF-1) and to discharge the treated air from the Reaction Chambers combined with the outside air, through the discharge stack (JC1-OEF-2). These fans can be activated by a HAND-OFF-AUTO selector switch at the Motor Control Center MCC-27B. When the switch is on HAND position, the fans can be operated by a START-STOP/LOCKOUT push button located near each fan. When the HAND-OFF-AUTO selector switch is in the AUTO position the fans are activated by a START push button at the Odor Control Electrical Panel. A running red light at Motor Control Center MCC-27B and at Odor Control Electrical Panel will indicate the fans are ON. An alarm at the Motor Control Center MCC-27B and at the Odor Control Electrical Panel will be activated in case of fan failure.

13. Odor Control System

The odor control system may be activated by turning on the system power supply and pushing the system ON push button and turning the other individual control switches on the Odor Control Electrical Panel to AUTO position. Lights at the Odor Control Electrical Panel will indicate the Odor Control System is on, exhaust fans are running, chemical pumps are on, water solenoid valve is open, and compressed air solenoid valve is open. The compressed air and diluted chemical solution from the Chemical Mixing Panel will be supplied to the atomizing spray nozzles in the Reaction Chambers to oxidize and absorb the odorous compounds in the exhaust air stream from the preaeration tanks (see description under Odor Control Equipment).

c. START-UP AND SHUTDOWN PROCEDURES

1. Start-up

(a) NaOCl and NaOH Storage Tanks

- Check that NaOCl and NaOH storage tanks have sufficient chemical in storage to operate the odor control system.

- Open the manually operated valves from the storage tanks to the chemical feed pumps to permit flow.

WARNING

Extreme caution is required while working in the NaOCl and NaOH storage and handling areas. Accidental contact with

these chemicals can result in serious personal injury or death. Refer to Chapter VI - Safety for Safety Precautions for Handling and Storage of Bulk Quantities of NaOCl and NaOH.

(b) Air Compressor System

- Check oil level in air compressor's oil sump.
- Drain water from the receiver tank and in-line air filter cartridges.
- Open all manually operated valves required to permit air flow from the compressors to the receiver tank and to the spray nozzles.
- Press START push button for each air compressor located at the compressor control panels.
- At the Odor Control Electrical Panel place the HAND-OFF-AUTO switch for Compressor Sequencer on AUTO position.

NOTE

Make sure the sequencer selector switch is in the ON position.

- At the Odor Control Electrical Panel, place the Air solenoid Valve HAND-OFF-AUTO selector switch for each stage of odor control system in the AUTO position.

(c) Exhaust Fans

- Turn the HAND-OFF-AUTO selector switch at Motor Control Center MCC-27B in the HAND or AUTO position.
- If the HAND-OFF-AUTO selector switch is in the HAND position, place the START-STOP/LOCKOUT push button at each unit in the START position.
- If the HAND-OFF-AUTO selector switch is in the AUTO position, press the START push button on the Odor Control Electrical Panel for each unit.

(d) Chemical Feed Pumps (NaOCl and NaOH)

- Make sure that each pump is plugged into the 120-volt receptacle designated for Chemical Feed Pump service.
- Place the HAND-OFF-AUTO selector switch for each chemical feed pump in the AUTO position at the Odor Control Electrical Panel (including the Chemical Feed Pumps for Drain Neutralization).
- Place the ON/OFF switch at the Odor Control Electrical Panel for Auto NaOCl Control in the ON position.

- Place the ON/OFF switch at the Odor Control Electrical Panel for Chlorine (Cl_2) Analyzer in the ON position.

- Place the ON/OFF switch at the Odor Control Electrical Panel for Heat Trace in the ON position.

NOTE

The small acid pump should be unplugged. The acid pump is used only intermittently for cleaning the spray nozzles as a maintenance procedure and should be unplugged until it is used.

(e) Odor Control Electrical Panel

- Check the indicating lights on the Odor Control Electrical Panel by depressing the push-to-test lights.

- At the Odor Control Electrical Panel, place the Water Solenoid Valve HAND-OFF-AUTO selector switch for each stage of odor control system in the AUTO position.

- Place the ON/OFF switch for all three stages on the Odor Control Chemical Panel in the ON position. The odor control system is now ready for automatic operation to be initiated.

- Close the Main Circuit Breaker on the Odor Control Electrical Panel.

- Close the 120-volt A-C circuit breaker on the Odor Control Electrical Panel.

- Depress the ON push button for the odor control system.

NOTE

Check that the following RED lights are ON: system on, Sequencer Panel, NaOCl pumps running, NaOH pumps running, water solenoid valves open, air solenoid valves open.

2. Shutdown

- Press the OFF push button on the Odor Control Electrical Panel for the odor control system.

- The following equipment will stop in sequence:
  - Exhaust Fans

- Chemical Feed Pumps
- Water solenoid valve close after 1-2 minutes time delay
- Air solenoid valve close after 1-2 minutes time delay
- Press the STOP push button on each Compressor Control Panel, located on each compressor, to stop each air compressor.

NOTE

If maintenance is to be performed on a chemical feed pump, place the HAND- OFF-AUTO selector switch on the OFF position and unplug the unit from the chemical feed pump receptacle.

d. ALTERNATE OPERATION

The odor control system may be operated manually by operating the individual components in sequence via push buttons on the equipment and the selector switches on the Odor Control Electrical Panel.

The HAND-OFF-AUTO selector switch for compressor sequencer at Odor Control Electrical Panel can be set to the HAND position. The HAND-OFF-AUTO selector switch for Air and Water Solenoid Valves on the Odor Control Panel can be set to the HAND position and each Air and Water Solenoid Valve can be manually operated. The HAND-OFF-AUTO selector switch for the chemical metering pumps on the Odor Control Electrical Panel can be set to the HAND position and the stroke length and stroke frequency can be manually adjusted by the dial knobs on the pumps to vary the pump capacity. The pH and ORP monitors must be carefully monitored to permit proper adjustment of chemical feed rates.

e. MONITORS AND ALARMS

The Odor Control Electrical Panel is provided for the odor control system with the following control devices:

- Power disconnect switch with system ON indicating light.
- Control Power transformer.
- TEST, RESET and ACKNOWLEDGE push buttons for Annunciator Panel.
- Exhaust fan push button and RUNNING indicating light for each fan.
- Compressor sequencer HAND-OFF-AUTO selector switch and ON indicating light.
- Air Solenoid Valve HAND-OFF-AUTO selector switch and ON and low air pressure indicating lights for each odor control system.
- Water Solenoid Valve HAND-OFF-AUTO selector switch and ON indicating light.
- Chemical system HAND-OFF-AUTO selector switch (control power to the metering pumps and automatic chemical pacing controls) and ON, LOW pH and HIGH pH indicating lights for all 3-stages of Odor Control System and LOW ORP and HIGH ORP indicating lights for Drain Neutralization and Stage 3 of Odor Control System.
- Acid Pump ON/OFF switch for System Acid Rinse and ON indicating light.

- Chemical Storage Tank Level Indicator and Low Chemical Level indicating light
- Chemical Storage Tank Heat Trace ON/OFF switch and ON indicating light.
- ON/OFF switch for each stage of Odor Control System and each stage of Drain Neutralization with ON indicating light.
- Chlorine Analyzer ON/OFF switch for Stage No. 3.
- Auto NaOCl Control ON/OFF switch with ON, LOW EXHAUST NaOCl and HIGH EXHAUST NaOCl indicating lights for Stage 3.
- Sample air and sample water ON indicating lights.

The following audible and visual alarms are provided on the annunciator in the Odor Control Electrical Panel:

Air Compressors:

LOW AIR RECEIVER TANK PRESSURE
HIGH AIR RECEIVER TANK PRESSURE
COMPRESSOR JC1-AC-1 MOTOR OVERLOAD
COMPRESSOR JC1-AC-1 HIGH DISCHARGE WATER TEMP. SHUTDOWN
COMPRESSOR JC1-AC-1 COOLANT FILTER HIGH DIFFERENTIAL PRESSURE
COMPRESSOR JC1-AC-1 AIR/OIL SEPARATOR WARNING
COMPRESSOR JC1-AC-1 AIR FILTER HIGH DIFFERENTIAL PRESSURE
COMPRESSOR JC1-AC-2 MOTOR OVERLOAD
COMPRESSOR JC1-AC-2 HIGH DISCHARGE WATER TEMP. SHUTDOWN
COMPRESSOR JC1-AC-2 COOLANT FILTER HIGH DIFFERENTIAL PRESSURE
COMPRESSOR JC1-AC-2 AIR/OIL SEPARATE WARNING
COMPRESSOR JC1-AC-2 AIR FILTER HIGH DIFFERENTIAL PRESSURE
COMPRESSOR JC1-AC-3 MOTOR OVERLOAD
COMPRESSOR JC1-AC-3 HIGH DISCHARGE WATER TEMP. SHUTDOWN
COMPRESSOR JC1-AC-3 COOLANT FILTER HIGH DIFFERENTIAL PRESSURE
COMPRESSOR JC1-AC-3 AIR/OIL SEPARATOR WARNING
COMPRESSOR JC1-AC-3 AIR FILTER HIGH DIFFERENTIAL PRESSURE

Odor Control:

NaOCl Storage Tank No. 1 Low Level
NaOCl Storage Tank No. 1 High Level
NaOCl Storage Tank No. 2 Low Level
NaOCl Storage Tank No. 2 High Level
NaOH Storage Tank No. 1 Low Level
NaOH Storage Tank No. 1 High Level
NaOH Storage Tank No. 2 Low Level
NaOH Storage Tank No. 2 High Level

Reaction Chamber No. 1 Chem Feed Malfunction
Reaction Chamber No. 2 Chem Feed Malfunction
Reaction Chamber No. 3 Chem Feed Malfunction
Exhaust Fan JC1-OEF-1 Failure
Exhaust Fan JC1-OEF-2 Failure
Drain Neutralization Chemical Feed Malfunction Stages 1 and 2
Drain Neutralization Chemical Feed Malfunction Stage 3

K. SUMP PUMPING EQUIPMENT: MV1-SP-1

The sump pumping equipment in Junction Chamber and Meter Vault No. 1 consists of a Sump Pump and associated drive motor, designated MV1-SP-1, and associated control panel, cover plate, frame and sump level control. The sump pumping equipment MV1-SP-1 is located in the northeast corner of Meter Vault No. 1. For a complete discussion of the sump pumping equipment, operation and control, refer to the section headed "Sump Pumping Equipment".

A sump and sump pump for the Odor Control System are provided at the low point of the 12-inch duct which conveys odorous air from the RSPS Screen Room to the covered influent channel of Junction Chamber No. 1. The sump pump is provided to remove moisture from the duct which condenses out of the air stream and to discharge the condensate to the Junction Chamber No. 1 Influent Channel. The sump pump is a submersible type pump rated at 20 gpm and 35 feet of head.

The pump is equipped with a liquid level control consisting of sealed mercury float switches for pump start and pump stop. The float switch level settings are such that the pump will start to operate when the liquid level is at an elevation of -0.20 and will stop running at a liquid level elevation of -1.00 (see Figure III-PR-JC1-7).

(1) SHUTDOWN

- Place the associated TEST-OFF-AUTO selector switch in the OFF position.

NOTE

If maintenance is to be performed on a pump, open the circuit breaker on the associated motor control center for the sump pump and open the breaker handle for the pump on its control panel. Follow approved **Lockout/Tagout** procedures (See Chapter VI, Safety).

a. ALTERNATE OPERATION

Each sump pump may be operated manually when the TEST-OFF-AUTO selector switch is in the TEST position. This will allow manual operation of the sump pump by positioning the ON-OFF/LOCKOUT switch at the unit in the ON position.

b. MONITORS AND ALARMS

Audible and visible alarms are provided for each sump pump at associated annunciator panels for high water level and pump failure. The alarms will be relayed to the Computer Logger in the Process Control Room located in the Main Pumping Station by the Remote Transmission Units in the Junction Chamber No. 1 Electrical Room.

Each pump is also provided with an operational indicating light and blue alarm light on its motor control center.

L. OXYGEN AND COMBUSTIBLE GAS DETECTION SYSTEMS: OG-104, 105 AND 106

(1) DESCRIPTION

Junction Chamber No. 1 is provided with an oxygen analysis system and combustible gas detection system, both arranged to transmit continuous indication of the oxygen and combustible gas levels in the preaeration tanks.

The oxygen purity analysis and combustible gas detection equipment includes the oxygen purity analyzer, two combustible gas analyzers, a Gas Analysis Equipment Cabinet (located in the Blower Room of Junction Chamber No. 1 for Preaeration Tank No. 1 and No. 2), a Gas Analysis Equipment Cabinet (located outside of the southeast corner of the Electrical Room for Preaeration Tank No. 3), indicators, controls, an alarm horn and alarm lights, a sample pump, piping and fittings, valves and air filters.

(2) NORMAL OPERATION

The oxygen purity analysis system continuously monitors the air in the preaeration tanks and indicates the percentage of oxygen on the Gas Analysis Cabinet (GAEC) and on Indicator G-79 on the Process Monitoring and Terminal Cabinet.

The combustible gas detection system continuously monitors the atmosphere in the preaeration tanks for the presence of combustible gases. The combustible gases likely to be encountered in the preaeration tanks include gasoline vapor and methane. The combustible gas levels are related to the lower explosion limit (LEL) of such gases. When a combustible gas level equal to 25 percent LEL is detected, the alarm horn will sound and the alarm lights will flash in the Junction Chamber and Meter Vault No. 1 for Preaeration Tanks No. 1 and No. 2 and the Combustible Gas Panel for Preaeration Tank No. 3. The annunciator panel on MCC-27 for Preaeration Tanks No. 1 and No. 2 will indicate a 25 percent LEL alarm and a 25 percent LEL alarm light on the Process Monitoring and Terminal Cabinet will be illuminated. If the combustible gas level increases to 50 percent LEL, the alarm horn and lights in Junction Chamber and Meter Vault No. 1 will continue to operate, the annunciator panel on MCC-27 (for Preaeration Tanks No. 1 and No. 2) will indicate a 50 percent LEL alarm and a 50 percent LEL alarm light on the Process Monitoring and Terminal Cabinet will be illuminated.

The Remote Transmission units in the Junction Chamber No. 1 Electrical Room continuously scan and transmit the condition of all alarm points and running indication of Preaeration Tanks to the Computer

Logger in the Process Control Room in the Main Pumping Station for alarm points 25 percent LEL and 50 percent LEL. Individual alarms and status are displayed by the Computer Logger.

The combustible gas detection system transmits a continuous indication of the combustible gas levels to the Computer Logger in the Process Control Room in the Main Pumping Station for Preaeration Tanks. The combustible gas detection system, for Preaeration Tank No. 3, transmits a continuous indication of combustible gas levels to an indicator in the Combustible Gas Panel.

M. PLANT AIR (SEE FIGURE III-SU-UPS-1 THROUGH 3)

The plant air equipment in Junction Chamber and Meter Vault No. 1 consists of piping and fittings, shutoff valves, hose connections, air line lubricators, in-line filters, pressure regulating valves, pressure gauges and various solenoid valves.

Compressed air is supplied to the plant air equipment by the Plant Air System as described in the sections headed "Main Pumping Station" and "Filter Building No. 1 and No. 2 and Junction Chamber No. 6".

The plant air equipment supplies compressed air to the bubbler type liquid level system, the pneumatically operated valves, the raw sewage sampling station and to hose connections.

N. PLANT WATER (SEE FIGURE-III-SU-UPS-4)

The plant water equipment in Junction Chamber and Meter Vault No. 1 consists of piping and fittings, shutoff valves and hose hydrants.

Plant water is supplied to Junction Chamber and Meter Vault No. 1 by the plant water equipment as described in the section headed "Main Pumping Station". The plant water is used for hosing down the floors and equipment.

O. CITY WATER (SEE FIGURE III-SU-UPS-4)

The city water is provided in the Compressor Building for the odor control system and emergency wash. A back flow preventer is provided to prevent contamination of city water through backflow from the Compressor Building.

P. EFFLUENT WATER (SEE FIGURE III-SU-UPS-5 THROUGH 9)

The effluent water equipment in Junction Chamber and Meter Vault No. 1 consists of piping and fittings, shutoff valves, flow indicators, needle valves, solenoid valves and a pressure switch.

Effluent water is supplied to Junction Chamber and Meter Vault No. 1 by the general purpose effluent water pumps as described in section headed "Filter Building No. 1 and No. 2 and Junction Chamber No. 6".

The effluent water is used to pump seal and lubrication water, pump pressure switch purge water and raw sewage sample line purge water.

Q. WASTERWATER SAMPLING PUMPING EQUIPMENT: JC1-WSP-1

(1) DESCRIPTION

The Raw Sewage Sampling Equipment and Pump is arranged to take samples from the Junction Chamber No. 1 Effluent Channel No. 2 (see Figures III-PR-JC1-4).

The Wastewater Sampling Pumping Equipment consists of one wastewater sampling pump, designated JC1-WSP-1. This pump is a single stage, vertical shaft, nonclogging, bottom suction, side discharge, centrifugal type, solids-handling, submersible sewage pump driven by a vertical constant speed motor. The Wastewater Sampling Pump is provided with a START-STOP/LOCKOUT push button on the unit and a START-STOP/LOCKOUT push button on the Motor Control Center MCC-27A. A Sampler Control Panel, located in the Refrigerator Room, is provided to operate the wastewater sampling equipment.

(2) START-UP AND SHUTDOWN PROCEDURES

a. START-UP

- Close circuit breaker in the Motor Control Center MCC-27A
- Depress the START push button on the MCC-27A

b. SHUTDOWN

- Depress the STOP push button on MCC-27A and activate the LOCKOUT system

NOTE

If maintenance is to be performed on the sampling pump, open the circuit breaker on MCC-27 and depress the STOP push button at the unit and engage the locking device. Follow approved **Lockout/Tagout** procedures (See Chapter VI, Safety).

(3) MONITORS

The Sampling Pump is provided with a red running indicating light at the Motor Control Center MCC-27A.

R. VENTILATION EQUIPMENT: JC1-REF-1, 2, 3 & 4, JC1-S-1, JC1-ACU-1, MV1-SF-1, CB-E-1, CB-S-1 AND RSPS-RAF-1

(1) DESCRIPTION

The purpose of the ventilation system in the Blower Room of Junction Chamber No. 1 is to provide 100 percent outside air to the Blower Room. The ventilation system consists of Roof Exhaust Fans JC1-REF-1, 2, 3 and 4 with associated thermostat controls and inlet louvers with manually operated dampers, Air Supply Fan JC1-S-1, Air Conditioning Unit JC1-ACU-1 and a Temperature Control Panel JC1-TCP-1.

The purpose of the ventilation system in Meter Vault No. 1 is to provide 100 percent outside air to the meter vault. The ventilation system consists of Supply Fan MV1-SF-1 with associated inlet and exhaust louvers with manually operated dampers.

The purpose of the ventilation system in the Compressor Room is to provide 100 percent outside air to the Compressor Room. The ventilation system consists of one Exhaust Fan CB-E-1, one Supply Fan CB-S-1 and one Temperature Control Panel CB-TCP-1.

Roof Exhaust Fans JC1-REF-1 and 2 are centrifugal fans and JC1-REF-3 and 4 are propeller upblast fans, driven by a single speed, 1.5 horsepower motor. Supply Fan JC1-S-1 supplies 75 cubic feet per minute of outside air to the Junction Chamber No. 1 Electrical Room.

A Return Air Fan RSPS-RAF-1 is provided in the Raw Sewage Pumping Station Screen Room.

(2) NORMAL OPERATION

Under normal operation the Raw Sewage Pumping Station Screen Room is ventilated continuously by the Return Air Fan RSPS-RAF-1. The fan continuously removes H_2S gas from the Raw Sewage Pumping Station Screen Room into Junction Chamber No. 1.

Roof Exhaust Fans JC1-REF-1, 2, 3 and 4 are each provided with an ON-OFF switch with a locking device for the OFF position at a convenient operating height below the unit. A HAND-OFF-AUTO selector switch and a red running indicator light for each fan are located on Motor Control Center MCC-27. Under normal operation, Roof Exhaust Fans JC1-REF-1 and 2 are set in the AUTO mode and will start to operate when the temperature in the Blower Room rises above the preset thermostat control set points until the temperature drops below these set points.

Temperature Control Panel JC1-TCP-1 will be energized by an ON/OFF switch located on the panel and an indicating light will light when the panel is ON. There is a Test/Reset push button on the panel to test all the alarm indicating lights or to reset any fan shutdown in alarm.

HAND-OFF-AUTO selector switches at Junction Chamber No. 1 Temperature Control Panel JC1-TCP-1 will permit continuous operation of Roof Exhaust Fans JC1-REF-3 and JC1-REF-4 when the selector switches are in HAND position. When the HAND-OFF-AUTO selector switches for the units are in the AUTO position, the units will operate sequentially for heat removal through their respective adjustable room thermostat as follows:

- JC1-REF-3 operates above 82 degrees F as sensed by a Thermostat.
- JC1-REF-4 operates above 84 degrees F as sensed by a Thermostat.

The fans will stop on a fall in the adjusted temperature. An ON-OFF/LOCKOUT switch and pressure switch are provided on each unit.

If the pressure switch detects no air flow within 5 seconds of operating, the unit will shut down. This is true as well when the units are already operational in the AUTO mode.

HAND-OFF-AUTO selector switches are provided at Junction Chamber No. 1 Temperature Control Panel JC1-TCP-1 for Air Conditioning Unit JC1-ACU-1 and Supply Fan JC1-S-1. A STOP/LOCKOUT switch is also provided at the supply fan unit.

When the HAND-OFF-AUTO selector switch for JC1-ACU-1 is on HAND or AUTO position the air conditioning unit will operate continuously. In the AUTO position, the pressure switch at the air conditioning unit must indicate air flow within 5 seconds. In this case, an indicating light will show a failure.

The Supply Fan JC1-S-1 will be interlocked with JC1-ACU-1 to run continuously when JC1-ACU-1 is in the AUTO position or when JC1-S-1 is in the HAND position. The fan will stop if turned off at the STOP/LOCKOUT switch located on the fan or by starter overload at the MCC-17B. The unit will also stop operating if the pressure switch does not indicate any flow within 5 seconds of being energized. In this case, an indicating light will show fan failure.

Supply Fan MV1-SF-1 is provided with an ON-OFF switch with a locking device for the OFF position mounted at a convenient height below the unit and a red running indicator light located on Motor Control Center MCC-27.

Temperature Control Panel CB-TCP-1 will be energized by an ON/OFF switch located on the panel and an indicating light will light when the panel is ON. There is a TEST/RESET push button on the panel to test all the alarm indicating lights or to reset any fan shutdown in alarm.

The Exhaust Fan CB-E-1 will run continuously when the HIGH-LOW-OFF-AUTO selector switch located on the CB-TCP-1 is on AUTO position as follows:

- CB-E-1 operates at low speed above 90 degrees F and de-energizes below 87 degrees F.
- CB-E-1 operates at high speed above 94 degrees F and de-energizes below 91 degrees F.

The Exhaust Fan CB-E-1 will be stopped if turned off at the STOP/LOCKOUT switch at the fan or by the starter overload at MCC-27B. A pressure switch is also located at unit CB-E-1 and upon sensing no air flow when the fan is running in the AUTO position, will energize an identified alarm at MCC-27B and de-energize the fan.

A HAND-OFF-AUTO selector switch on Compressor Building Temperature Control Panel CB-TCP-1 will permit continuous operation of Supply Fan CB-S-1 when in the HAND position. Normally, however, the unit operates continuously with the selector switch in the AUTO position and through a 7-day time clock. The exception being that the unit overrides the non-operating mode for heat removal when the adjustable room thermostat senses a temperature of 84 degrees F. The controls will revert back to the 7-day time clock setting when the temperature drops below 83 degrees F.

The Supply Fan CB-S-1 will be stopped if turned off at STOP/LOCKOUT switch located at the fan or by starter overload at the MCC-27B. A pressure switch is also provided at the fan and will energize an identified alarm at MCC-27B upon sensing 5 seconds of air flow failure when the fan is running in the AUTO position.

(3) START-UP AND SHUTDOWN PROCEDURES

To start up or shut down the ventilation equipment, use the following procedures:

a. START-UP

1. Return Air Fan: RSPS-RAF-1
   - Close circuit breaker located in the Motor Control Center MCC-61.
   - Place the ON/OFF LOCKOUT at the unit in the ON position.

WARNING

The Raw Sewage Pump Station Screen Room is designated as a hazardous area. Insufficient oxygen and dangerous levels of Hydrogen Sulfide and combustible gases may be present. Refer to Chapter VI - Safety of the AWT O & M Manual of Division 4H4.

   - Depress the START push button located in the Motor Control Center MCC-61 located at the Raw Sewage Pump Station.

2. Roof Exhaust Fans: JC1-REF-1, 2, 3 and 4
   - Open the manual dampers on the intake louvers.
   - Place the ON-OFF switch at the unit in the ON position.
   - Place HAND-OFF-AUTO selector switch for JC1-REF-1 and 2 on Motor Control Center MCC-27 in the AUTO position and place the HAND-OFF-AUTO selector switch on JC1-TCP-1 in the AUTO position for JC1-REF-3 and 4.

3. Suppy Fan: MV1-SF-1 and CB-S-1

   MV1-SF-1
   - Open the manual dampers on the inlet and exhaust louvers.
   - Place the ON-OFF switch at the unit in the ON position.
   - Close the circuit breaker on MCC-27.

   CB-S-1:
   - Open the manual damper on the inlet and exhaust louvers.
   - Place the HAND-OFF-AUTO selector switch at the unit in the AUTO position.
   - Press the ON/OFF switch on CB-TCP-1 to energize the panel.

4. Air Conditioning and Supply Fan: JC1-ACU-1 and JC1-S-1
   - Open the manual dampers on the inlet and exhaust louvers.
   - Place the ON-OFF switch at the supply fan in the ON position.
   - Place the ON-OFF switch at air conditioning unit in the ON position.
   - Place the HAND-OFF-AUTO selector switch for both JC1-ACU-1 and JC1-S-1 in the AUTO position.

5. Exhaust Fan: CB-E-1
   - Open the manual dampers at the louvers.
   - Place the ON-OFF switch at the unit in the ON position.
   - Place the HAND-OFF-AUTO selector switch on the CB-TCP-1 in the AUTO position.

b. SHUTDOWN

1. Return Air Fan: RSPS-RAF-1
   - Depress the STOP push button on MCC-61 located at the Raw Sewage Pumping Station.
   - Place the MANUAL-OFF-AUTO selector switch on Distribution Center 27A in the OFF position for the Compressor Building Exhaust Fan CB-E-1.

NOTE

If maintenance is to be performed on a fan, open its circuit breaker on the associated Distribution Center or Motor Control Center and engage the locking device on the ON/OFF lockout at the unit. Follow approved **Lockout/Tagout** procedures (See Chapter VI, Safety).

2. Roof Exhaust Fans: JC1-REF-1, 2, 3 and 4
   - Place the HAND-OFF-AUTO selector switch on MCC-27 for JC1-REF-1 and 2, and on JC1-TCP-1 for JC1-REF-3 and 4 in the OFF position.
   - Place the ON-OFF switch at each fan in the OFF position.

NOTE

If maintenance is to be performed on the fan, open the circuit breaker on MCC-27 for JC1-REF-1 and 2, and JC1-TCP-1 for JC1-REF-3 and 4 and move the ON-OFF switch at the unit to the OFF position and engage the locking device.

3. Supply Fans: MV1-SF-1 and CB-S-1

   MV1-SF-1:

   - Place the ON-OFF switch at the unit in the OFF position.

   CB-S-1:

   - Place the ON-OFF switch at the unit in the OFF position.

4. Air Conditioning Unit and Supply Fan: JC1-ACU-1 AND JC1-S-1
   - Place the ON-OFF switch at the supply fan unit in the OFF position.
   - Place the HAND-OFF-AUTO selector switch for the air conditioning unit at JC1-TCP-1 in the OFF position.

5. Exhaust Fab: CB-E-1
   - Place the HIGH-LOW-OFF-AUTO switch on CB-TCP-1 in the OFF position.
   - Place the ON-OFF switch at the unit in the OFF position.

NOTE

If maintenance is to be performed on the fan, open the circuit breaker on MCC-27 and JC1-TCP-1 and place the ON-OFF switch at the unit to the OFF position and engage the locking device. Follow approved **Lockout/Tagout** procedures (See Chapter VI, Safety).

(4) MONITORS AND ALARMS

Each fan is provided with a red running indicator light on Motor Control Center MCC-27 for JC1-REF-1 and 2, and MCC-27A for JC1-REF-3 and 4, JC1-EF-3, JC1-S-1, CB-S-1 and CB-E-1. Supply Fan RSPS-RAF-1 is provided with a running indicating light on MCC-61.

Identified alarm pilot lights mounted on the front of the Temperature Control Panel JC1-TCP-1 indicates the following equipment failure alarms:

- Air Conditioning Unit Air Flow
- Supply Fan Air Flow
- Roof Exhaust Fan Air Flow
- Roof Exhaust Fan Air Flow

An indicating light for power ON at JC1-TCP-1 is located on the Temperature Control Panel JC1-TCP-1.

Identified alarm pilot lights mounted on the front of the Temperature Control Panel CB-TCP-1 indicate the following equipment failure alarms:

- Supply Fan Air Flow
- Roof Exhaust Fan Air Flow

An indicating light for power ON at CB-TCP-1 is located on the panel along with the following indicating lights when the following equipment is operating:

- Supply Fan Air Flow
- Roof Exhaust Fan Air Flow

S. POWER DISTRIBUTION SYSTEM

The power distribution system is shown in detail on the contract plans and various shop drawings (refer to Table III-PR-JC1-1).

III-PR-PST - PRIMARY SEDIMENTATION TANKS 1-8 (009, 020, 082, 083)

A. GENERAL

The Primary Sedimentation Tank Facilities include two sets of tanks, Primary Sedimentation Tanks Nos. 1 through 4 and Primary Sedimentation Tanks Nos. 5 through 8, Primary Sludge Pumping Station No. 1 for Tanks Nos. 1 through 4, Primary Sludge Pumping Station No. 2 for Tanks Nos. 5 through 8, and a Primary Control Building for Tanks Nos. 5 through 8.

(1) PRIMARY SEDIMENTATION TANKS 1-4 (009) AND 5-8 (082)

Primary Sedimentation Tanks Nos. 1 - 4 and Primary Sedimentation Tanks Nos. 5 - 8 are used to remove suspended solids from the flow stream. The velocity of the flow is reduced to allow for suspended solids to be removed by gravity. In addition, grease, scum and other floatables are removed by skimming.

(2) PRIMARY SLUDGE PUMPING STATIONS NO.1 (020) AND NO. 2 (083)

Primary Sludge Pumping Station No. 1 contains the sludge pumps that serve Primary Sedimentation Tanks No. 1 through 4. The primary sludge pumps are used to pump the settled sludge from the primary sedimentation tanks to the anaerobic digesters. This station utilizes two primary sludge pumps in a wet pit/dry pit configuration. The sludge is pumped to either Sludge Control Building A, Sludge Control Building B or Mixed Sludge Pumping Station. The power distribution system is also located in the Station.

Primary Sludge Pumping Station No. 2 contains the sludge pumps and dewatering pumps that serve Primary Sedimentation Tanks No. 5 through 8. The primary sludge pumps are used to pump the settled sludge from the primary sedimentation tanks to the anaerobic digesters. This wet well contains two submersible primary sludge pumps. Sludge is pumped from this wet well to either the Mixed Sludge Pumping Station or Primary Sludge Pumping Station No. 1 for repumping to the digesters. The purpose of the dewatering pumps is to drain the primary sedimentation tanks, the scum chamber, or the scum overflow chamber.

(3) PRIMARY CONTROL BUILDING (083)

The Primary Control Building, which is located adjacent to Primary Sludge Pumping Station No. 2 and Primary Sedimentation Tanks No. 5 - 8, houses the power distribution system that serves those facilities. The building is equipped with heating, ventilation and air conditioning equipment.

Refer to Table III-PR-PST-1, Primary Sedimentation Tanks - Facility Equipment Summary, for control numbers, manufacturer's names, equipment capacities, operation, maintenance, and contract plan and shop drawing references. Refer to the Contractor's O & M Manual for manufacturer's Service Manuals pertaining to equipment installed in these facilities.

Figures III-PR-PST-1 and III-PR-PST-2 provide schematic diagrams of the Primary Sedimentation Tanks and associated piping.

B. PRIMARY SEDIMENTATION TANKS NOS. 1 - 4 AND PRIMARY SEDIMENTATION TANKS NOS. 5 - 8 (009, 082)

(1) DESCRIPTION

The Primary Sedimentation Tanks include the following equipment:

- Longitudinal Collectors
- Cross Collectors
- Scum Skimmer Mechanism

The Primary Sedimentation Tanks are located west of the Main Pumping Station and east of the Sludge Digestion Tanks. Tanks Nos. 1 through 4 were built as part of the primary treatment plant and Tanks Nos. 5 through 8 were constructed as part of the Advanced Treatment Facility.

There are two Primary Sedimentation Tank Structures, each containing four tanks. The tanks are approximately 43 feet wide, 119 feet long and 14 feet deep.

Screened and de-gritted wastewater is taken to the primary sedimentation tanks. Wastewater enters Primary Sedimentation Tanks No. 1 - 4 from Junction Chamber No. 2 and Meter Vault No. 2 through Junction Chamber No. 3. Wastewater which flows through Junction Chamber No. 2 and Meter Vault No. 2 enters Primary Sedimentation Tanks No. 5 - 8 through a 96-inch pipeline. Other influent includes FBS Thickener underflow which is pumped to Tanks Nos. 1 and 2, scum from the Final Sedimentation Tanks which can be pumped to Tanks Nos. 1, 2, 5 or 6, and grease from the reactors which is pumped to Tanks Nos. 1, 2, 5 and 6.

Flow is split hydraulically among all the primary sedimentation tanks in operation. The wastewater discharges into a common influent conduit at the tanks. The conduits are tapered to maintain a uniform velocity as flow is discharged to each tank. Wastewater flows through a rising well from the influent conduit to each tank. The rising well contains a flow control orifice. The influent flows from this orifice to the tank influent channel.

A motorized slide gate is located between each tank's flow control orifice and influent channel. These gates are used when it is necessary to take a tank out of service. The influent channel serves to distribute flow evenly across the width of each tank, using eight slotted openings. The slotted openings induce jets of relatively high velocity into the tanks which can decrease sedimentation efficiency. Baffles located after the slotted openings serve to dissipate the energy of the jets.

Downstream of the baffles, the wastewater flows down the length of the sedimentation tank toward the effluent weirs. The horizontal velocity of the flow is almost zero which allows the liquids and solids to separate. The heavier materials in the wastewater settle to the sedimentation tank floor creating a sludge. The lighter materials float to the surface, creating a scum or floatable layer.

Sludge which settles to the bottom of the primary sedimentation tanks is collected at the west end of each basin by longitudinal collectors, and is transported to each tank's sludge sump by a cross collector in each

tank. It is removed from the sludge sump by 8-in sludge draw-off piping that directs the sludge by gravity to the primary sludge wet well in Primary Sludge Pumping Stations Nos. 1 or 2.

The sludge blanket should be monitored approximately every two hours. Sludge should be withdrawn when the operator considers that a dense sludge can be removed. A blanket that is 1 - 1.5 feet thick is usually adequate for withdrawal. If the sludge remains in the tank too long, gasification may occur and the sludge will float in the tank or the blanket may become too dense and clog the draw-off lines.

The longitudinal collectors travel at the liquid surface on the return from the inlet end to the effluent end of each tank and skim floatable materials which are deposited at the slotted pipe scum skimmer. Skimming of floatable materials is accomplished manually by a revolving 12-in diameter handwheel-operated rack and pinion type scum collecting pipe. The operation of the collecting pipe should provide enough water to flush the scum down the length of the scum channel while minimizing the amount of this transport water which must be treated again. Scum entering the pipe is directed to the scum chamber in Primary Sludge Pumping Stations Nos. 1 or 2.

Primary sedimentation tank effluent from the tanks flows to the effluent channel and into a 66-inch pipeline that discharges to the Main Pumping Station. From the Main Pumping Station, the primary effluent is pumped to secondary and advanced treatment facilities.

Primary sludge is withdrawn from the Primary Sedimentation Tanks by the use of plug valves located in the Primary Sludge Pumping Stations. These valves are connected to sludge withdrawal piping from each of the primary sedimentation tanks. Sludge discharged from each of these valves impinges on a splash plate. The splash plate aides the operator in visually determining the consistency and color of the sludge.

(2) LONGITUDINAL COLLECTORS

a. DESCRIPTION

The longitudinal collector mechanism flights scrape the bottom of the sedimentation tank from the effluent end to the inlet end. In this direction, sludge is transported to a cross collector channel at the inlet end of each tank. On the return from the inlet end to the effluent end of each tank, the flights travel at the liquid surface and skim floatable materials which are deposited at the slotted pipe scum skimmer.

The longitudinal collector in each tank consists of a three-shaft conveyor-type chain and scraper collector. Collector speed is approximately two feet per minute.

Controls for the longitudinal collectors are located in the control cabinets in Primary Sludge Pumping Station No. 1 or the Primary Control Building. The controls consist of START-STOP switches, run indication lamps, over torque alarms with lockouts and reset pushbuttons, and test pushbuttons.

b. NORMAL OPERATION

The longitudinal collectors should be in continuous operation unless maintenance is required in the primary sedimentation tanks or if the water level in the tank drops below the upper collection rails.

c. START-UP AND SHUTDOWN PROCEDURES

The start-up and shutdown procedures for the longitudinal collectors should include the following tasks:

1. START-UP

- Close flushing sluice gates and dewatering sluice gates
- Remove effluent collection channel stop plate
- Make sure the circuit breakers are closed at the MCC.
- Make sure the local disconnect is closed.
- Make sure the tank is free of all obstructions.
- Make sure each unit is mechanically ready in accordance with manufacturer recommendations.
- Open the appropriate motor operated inlet slide gate to allow wastewater to enter the sedimentation tank. The gate should be opened slowly to not affect the plant's downstream hydraulics.
- When the wastewater is above the upper collector rail, place the START-STOP switch in the START position and make sure the appropriate run indication lamps are illuminated

2. SHUTDOWN

- Close the appropriate sedimentation tank inlet slide gate.
- Operate the slotted pipe scum skimmer mechanisms to remove as much scum as is possible from the liquid surface.
- Draw off as much sludge as possible from the sedimentation tank, as long as the sludge quality remains acceptable. It may be necessary to withdraw sludge several times.
- Place the START-STOP switch in the STOP position.
- Open the dewatering sluice gate to the dewatering pumps in the Primary Sludge Pumping Station
- When the tank is essentially empty, open the flushing sluice gate for each half of the sedimentation tank being dewatered. This will allow primary effluent to enter the tank and aid in flushing the tank floor. It will be necessary to block up the flights with 2x4 or 4x4 blocks prior to opening the flushing sluice gates. This will allow flushing water and debris to pass under the flights.
- When the tank floor has been flushed as well as possible by primary effluent, close the flushing gates. The tank can then be hosed out. Maintain the collectors in operation, if operable, and hose the inside of the tank from the walkway.

- Open the local disconnect. If the flights were not previously blocked, they should now be blocked if additional cleaning is required.

NOTE

If maintenance is to be performed on the Longitudinal Collectors, place the START-STOP switch in the STOP position, open the circuit breakers in the appropriate Motor Control Center (Sludge Pumping Station No. 1 MCC for Tanks Nos. 1 through 4, MCC-48 for Tanks Nos. 5, 6 and 8 and MCC-49 for Tank No. 7). Follow approved **Lockout/Tagout** procedures (See Chapter VI, Safety).

d. MONITORS AND ALARMS

Should a longitudinal collector become jammed, causing a high torque limit switch to actuate, the collectors will stop and an alarm will be indicated in the annunciator in Primary Sludge Pumping Station No. 1 or the Primary Control Building. This alarm is relayed to the Main Control Room. When the obstruction is cleared and the collectors are ready to be placed in operation, depress the reset button at the MCC and restart the collectors.

If the high torque limit switch fails, each collector is equipped with a shear pin which will break to prevent damage to the drive mechanism or collector mechanism.

(3) CROSS COLLECTORS

a. DESCRIPTION

The cross collectors move the sludge deposited by the longitudinal collectors to a sump from which it is withdrawn to the sludge pumping stations. The cross collector provided in each tank consists of a three-shaft conveyor-type chain and scraper collector. Collector speed is approximately two feet per minute.

Controls for the cross collectors are located in the control cabinets in Primary Sludge Pumping Station No. 1 or the Primary Control Building. The controls consist of START-STOP switches, run indication lamps, over torque alarms with lockouts and reset pushbuttons, and test pushbuttons.

b. NORMAL OPERATION

The cross collectors should be in continuous operation unless maintenance is required in a primary sedimentation tank or a longitudinal collector is taken out of service.

c. START-UP AND SHUTDOWN PROCEDURES

The start-up and shutdown procedures for the cross collectors should include the following tasks:

1. START-UP
   - Close flushing sluice gates and dewatering sluice gates
   - Remove effluent collection channel stop plate
   - Start the longitudinal collectors.
   - Make sure the circuit breakers are closed at the MCC.
   - Make sure the local disconnect is closed.
   - Make sure the tank is free of all obstructions.
   - Make sure each unit is mechanically ready in accordance with manufacturer recommendations.
   - Open the appropriate motor operated inlet slide gate to allow wastewater to enter the sedimentation tank. The gate should be opened slowly to not affect the plant's downstream hydraulics.
   - When the wastewater is above the upper collector rail, place the START-STOP switch in the START position and make sure the appropriate run indication lamps are illuminated

2. SHUTDOWN
   - Close the appropriate sedimentation tank inlet slide gate.
   - Operate the slotted pipe scum skimmer mechanisms to remove as much scum as is possible from the liquid surface.
   - Draw off as much sludge as possible from the sedimentation tank, as long as the sludge quality remains acceptable. It may be necessary to withdraw sludge several times.
   - Place the START-STOP switch in the STOP position.
   - Open the dewatering sluice gate to the dewatering pumps in the Primary Sludge Pumping Station
   - When the tank is essentially empty, open the flushing sluice gate for each half of the sedimentation tank being dewatered. This will allow primary effluent to enter the tank and aid in flushing the tank floor. If the longitudinal collectors are working, they should remain in operation. It will be necessary to block up the flights with 2x4 or 4x4 blocks prior to opening the flushing sluice gates. This will allow flushing water and debris to pass under the flights.
   - When the tank floor has been flushed as well as possible by primary effluent, close the flushing gates. The tank can then be hosed out. Maintain the collectors in operation, if operable, and hose the inside of the tank from the walkway.
   - Open the local disconnect. If the flights were not previously blocked, they should now be blocked if additional cleaning is required.

NOTE

If maintenance is to be performed on the Cross Collectors, place the START-STOP switch in the STOP position, open the circuit breakers in the

appropriate Motor Control Center (Sludge Pumping Station No. 1 MCC for Tanks Nos. 1 through 4, MCC-48 for Tanks Nos. 5, 6 and 8 and MCC-49 for Tank No. 7). Follow approved **Lockout/Tagout** procedures (See Chapter VI, Safety).

d. MONITORS AND ALARMS

Should a cross collector become jammed, causing a high torque limit switch to actuate, the collectors will stop and an alarm will be indicated in the annunciator in Primary Sludge Pumping Station No. 1 or the Primary Control Building. This alarm is relayed to the Main Control Room. When the obstruction is cleared and the collectors are ready to be placed in operation, depress the reset button at the MCC and restart the collectors.

If the high torque limit switch fails, each collector is equipped with a shear pin which will break to prevent damage to the drive mechanism or collector mechanism.

C. PRIMARY SLUDGE PUMPING STATIONS NO. 1 (020) AND NO. 2 (083)

(1) DESCRIPTION

The Primary Sludge Pumping Stations include the following equipment:

- Raw Sludge Pumps
- Dewatering Pumps (Primary Sludge Pumping Station No. 2)
- Power Distribution Equipment

(2) RAW SLUDGE PUMPS

a. DESCRIPTION

Four sludge inlet pipes enter each Sludge Pumping Station wet well, one from each sedimentation tank. The scum chamber is also connected to the wet well. The wet wells are approximately 8 feet wide by 8 feet long by 16 feet deep.

Sludge Pumping Station No. 1 has a wet pit/dry pit configuration. Two 20-HP, recessed impeller pumps are located in the dry pit. The pumps discharge through a 6-inch pipe to the Mixed Sludge Pumping Station (MSPS), Sludge Control Building A, or to Sludge Control Building B. Sludge is normally pumped to the MSPS.

The pumps for Sludge Pumping Station No. 2 rest on the wet well floor and discharge to the primary sludge force main through a 6-inch pipe to the MSPS or to Sludge Pumping Station No. 1 wet well. Two submersible primary sludge pumps are installed in the wet well. The pumps are vortex (recessed impeller) units with 12.7-HP motors.

Controls for the primary sludge pumps consist of H-O-A switches, elapsed time meters and run indication lamps located in the Sludge Pumping Station No. 1 MCC, MCC-48 and MCC-49.

Level float switches are located in the primary sludge wet well. Relay logic is located in the terminal cabinets.

b. NORMAL OPERATION

Under normal conditions the pumps should operate in the automatic mode and automatically alternate operation. If the sludge level reaches a level where both pumps are operating, an alarm is signaled at the controls and relayed to the Main Pumping Station.

c. START-UP AND SHUTDOWN PROCEDURES

To start-up and shut down the primary sludge pumps, use the following procedures:

1. START-UP
   - Open the plug valves in each pump discharge line.
   - Close the local disconnects and close the circuit breakers in the Motor Control Centers.
   - Place the H-O-A switches in the AUTO position.

2. SHUTDOWN
   - Place the H-O-A switches in the OFF position.
   - Open the MCC cubicle breakers and open the local disconnects

NOTE

If maintenance is to be performed on the primary sludge pumps, place the H-O-A switch in the OFF position, open the circuit breakers in the appropriate Motor Control Center (Sludge Pumping Station No. 1 MCC, MCC-48 or MCC-49). Follow approved **Lockout/Tagout** procedures (See Chapter VI, Safety).

d. MONITORS AND ALARMS

Alarms are signaled when the pumps reach a high temperature, when moisture is detected at the bearing seals, when there is a pump failure, or when the is a high level alarm. The alarms are sounded at Sludge Pumping Station No. 1 or Primary Control Building and at the Main Pumping Station.

(3) DEWATERING PUMPS

a. DESCRIPTION

The purpose of the dewatering pumps located in Primary Sludge Pumping Station No. 2 is to drain the primary sedimentation tanks, the scum chamber, or the scum overflow chamber. There is one 12-in drain line that enters the dewatering pump wet well from Primary Sedimentation Tanks Nos. 5 and 6, and 12-in drain line from Tanks Nos. 7 and 8. In addition, there is a 6-in drain line from

the scum collection chamber to the wet well and a second 6-in drain line from the scum overflow chamber. All drain lines are ductile iron.

The dewatering pump wet well in Sludge Pumping Station No. 2 is approximately 10 feet wide by 10 feet long by 20 feet deep. The two dewatering pumps are submersible, non-clog wastewater pumps. Each pump is driven by a 35-HP motor and pumps 2000 gpm at 30 feet TDH. Each pump has a 12 inch discharge line which join together into a single 12 inch dewatering force main which discharges into Junction Chamber No. 2.

Controls for the dewatering pumps consist of ON - OFF switches located in MCC-48 and MCC-49 and low level shut off floats are located in the wet well.

Primary Sedimentation Tanks Nos. 1 - 4 are dewatered by gravity to the Raw Sewage Pumping Station. Gravity dewatering will only remove 85% of the water. Portable pumps are required for complete tank dewatering.

b. NORMAL OPERATION

The submersible dewatering pumps for Primary Sedimentation Tanks nos. 5-8 are operated when one of the primary sedimentation tanks needs to be drained, or when liquid is drawn off the scum chamber or scum overflow chamber. Operation is on an as-needed basis. Four to six feet of liquid should be in the wet well before either pump is operated. When the liquid level drops to a point where the wet well is nearly empty, the pump is automatically shut down by a mercury float switch located in the wet well.

c. START-UP AND SHUTDOWN PROCEDURES

To start-up and shut down the dewatering pumps, use the following procedures:

1. START-UP
   - Open the plug valves in each pump discharge line.
   - Close the local disconnects and close the circuit breakers in MCC-48 and MCC-49.
   - Select the desired pump and push the appropriate ON button.

2. SHUTDOWN
   - Press the OFF button for the pump.
   - Open the MCC cubicle breakers and open the local disconnects.

NOTE

If maintenance is to be performed on the dewatering pumps, place the START-STOP switch in the STOP position, open the circuit breakers in the appropriate Motor Control Center (Sludge Pumping Station

No. 1 MCC, MCC-48 or MCC-49). Follow approved **Lockout/Tagout** procedures (See Chapter VI, Safety).

d. MONITORS AND ALARMS

Alarms are signaled when the pumps reach a high temperature or when moisture is detected at the bearing seals. The alarms are sounded at the Primary Control Building and Main Pumping Station.

(4) POWER DISTRIBUTION SYSTEM

The power distribution system is shown in detail on the contract plans and various shop drawings. Refer to Table III-PR-PST-1, Primary Sedimentation Tanks - Facility Equipment Summary, for contract plan and shop drawing number which pertain to the power distribution system.

D. PRIMARY CONTROL BUILDING (083)

(1) DESCRIPTION

The Primary Control Building includes the following equipment:

- Heating, ventilating and air conditioning equipment
- Power Distribution Equipment

The Primary Control Building is located adjacent to Primary Sludge Pumping Station No. 2 and Primary Sedimentation Tanks Nos. 5 - 8.

(2) <u>HEATING, VENTILATION AND AIR CONDITIONING EQUIPMENT</u>

a. DESCRIPTION

The HVAC system consists of one air conditioning unit installed in the Primary Control Building. This unit is a combination cooling-heating system controlled by a thermostat.

b. NORMAL OPERATION

1. START-UP:

The air conditioner is powered from Panel A, through an ON-OFF switch. When the switch is placed in the ON position, the AC unit is energized through its controls. Continued operation will be dependent on the heat-cool thermostat. The cooling cycle should be controlled at approximately 78°F, and heating controlled at approximately 68°F. The cooling is supplied from a standard direct expansion air cooled system and the heating is supplied by an electric strip heater.

2. SHUTDOWN:

The air conditioner is stopped by placing the switch in Panel A in the OFF position.

(3) POWER DISTRIBUTION SYSTEM

The power distribution system is shown in detail on the contract plans and various shop drawings. Refer to Table III-PR-PST-1, Primary Sedimentation Tanks - Facility Equipment Summary, for contract plan and shop drawing number which pertain to the power distribution system.

III-PR-MSPS - MIXED SLUDGE PUMPING STATION (071)

A. GENERAL

The Mixed Sludge Pumping Station is a two level structure located southwest of Primary Sedimentation Tanks No. 1 - No. 4. This structure contains the following equipment and systems:

- Mixed Sludge Pumps
- Sludge Grinder Equipment
- Plant Water Pumps
- Plant Water Jockey Pump
- Air Break Tank
- Mixed Sludge Flow Meter
- Plant Water Flow Meter
- City Water system
- Effluent Water System
- Seal Water System
- Sump Pumping Equipment
- Hoisting Equipment
- Heating, Ventilating and Air Conditioning Equipment
- Power Distribution System

Primary sludge from both Primary Sedimentation Tanks No. 1 - No. 4 and from Primary Sedimentation Tanks No. 5 - No. 8, thickened waste activated sludge (WAS), thickened Floating Biological Solids (FBS), and primary scum may be routed to this station. Sludge is received in the wet well periodically from the Primary Sedimentation Tanks as sludge is withdrawn from the tanks. Thickened WAS is received from either or both of the Belt Thickener Building and the Gravity Thickeners. Thickened FBS is received in the wet well on an intermittent basis from the FBS Thickening Facility. Piping to and from the Mixed Sludge Pumping Station is shown on Figures III-PR-MSPS-1 and III-PO-ADTG-1. Sludge may be pumped from this structure to either Anaerobic Digesters No. 1 through No. 5 or to Anaerobic Digesters No. 6 and No. 7, or to all seven anaerobic digesters, depending on the digestion operating mode selected. Mixed sludge flow is metered prior to flowing to the digestion system (see Figure II-2A and III-PO-ADTG-1).

Refer to Table III-PR-MSPS-1, Mixed Sludge Pumping Station - Facility Equipment Summary, for control numbers, manufacturers, equipment capacities and operation, maintenance, contract plan and shop drawing references. Refer to the Contractor's O & M Manuals for Manufacturers' Service Manuals pertaining to equipment installed in the Mixed Sludge Pumping Station.

B. MIXED SLUDGE PUMPS: NO. 1 , NO. 2, and NO. 3

(1) DESCRIPTION

The mixed sludge pumps are provided to pump combined primary sludge and thickened WAS to Anaerobic Digesters No. 1 through 7. The mixed sludge pumping equipment consists of three pumps, associated drive units and controls.

Mixed Sludge Pumps No. 1 and 2 are end suction, top discharge, constant speed vortex type solids handling pumps driven by 25 H.P. motors. Each pump has a nominal duty point of 350 gpm at a head of 65 ft. while operating at 1750 rpm. Mixed Sludge Pump No. 3 is an end suction, top discharge, constant speed, screw centrifugal type solids handling pump driven by a 60 H.P. motor. Pump No. 3 has a nominal duty point of 1675 gpm at a head of 85 feet while operating at 1750 rpm. The mixed sludge pumps are operated and controlled from the Mixed Sludge Pumping Station Instrumentation Control Panel.

The mixed sludge pumping station instrumentation control panel is located in the motor control room on the first floor of the Mixed Sludge Pumping Station. This control panel consists of the following:

- FIX 15, a batch flow controller for sludge feed to anaerobic digesters Nos. 1 through 7. OFQ 15, six flow totalizers, one for each anaerobic digester No. 1 through No. 5 and one for manual operation flow totalizing.
- Open/close valve control and position indication for fill valves to digesters No. 1 through 7.
- Open/close valve control and position indication for an isolation valve for digester No. 1 through 5 (PM-3-2) and an isolation valve for digester No. 6 and 7 (PM-3-1)
- In service/out of service selector switches for digesters No. 1 through 7.
- A selector switch (Auto Sequence and Level/Level Only) which allows for the fillings of digesters No. 1 through 5 using automatic sequencing of the digester to be filled with wet well level, net well level only.
- Hand-off-automatic switches for each pump.
- Lead/lag pump selector switch.
- Alarm annunciation and pushbutton reset.
- A PLC for controlling the distribution of flow.
- Run indication lamps.

The basic control strategy for the mixed sludge pumps is as follows: Digesters No. 1 through 5 are filled on a batch basis which is automatically sequenced to each digester in service. The PLC indicates the next digester in the sequence which is in service and provides the filling logic for each digester. The volume of sludge can be programmed individually to each digester throughout the PLC.

(2) NORMAL OPERATION

Three suction lines, cross connected, are provided for the mixed sludge pump (see Figure III-PO-ADTG-1). Under normal operations, the plug valves in the cross connection are closed, and the remaining suction plug valves are open. This allows each pump to operate with its associated suction line.

Each pump has a discharge line, with a cushioned check valve and shut-off (plug) valve in each discharge line. Normally, the plug valves are open. The cushioned check valve associated with a pump will open upon flow through the valve when the applicable pump starts.

Under normal operating conditions, as flow enters the mixed sludge pump wet well, the level will rise until it reaches the pump start probe. This will cause the batch controller to select the digester to be filled. Once selected, the, controller will then automatically proceed through the following logic sequence:

a. Open the digester fill valve
b. Make sure the digester valve did open
c. Reset totalizer
d. Start pump
e. Fill digester until the flow quantity is reached.
f. Turn off pump
g. Close digester fill valve
h. Make sure the digester fill valve did close

If the fill valve does not open within the time provided, the controller will annunciate an alarm and then attempt to close the valve. If the valve does not close within the time provided, the controller will annunciate another alarm. The controller will then activate the next digester in the sequence that is in service.

Once the PLC starts a pump, three conditions will normally cause it to stop.

1. If the totalizer reaches the flow quantity set in the flow controller, thus ending the batch fill process for this digester.

2. If the digester becomes full as sensed by a liquid level meter before the flow set point is achieved, the controller will stop the pump and close the fill valve, thus ending the batch fill process for this digester.

3. If the level in the mixed sludge wet well drops to the off probe level, the mixed sludge pump will stop. When the wet well level then rises to the start probe level, the pump will continue to fill this digester again until a complete batch fill cycle is complete.

(3) START-UP AND SHUTDOWN PROCEDURE

a. START-UP

Prior to energizing the control panel:

- Place all the in service/out of service selector switches to the out of service position.
- Place the auto sequence/pump level operation selector switch in the auto sequence position.
- Place the batch manual/auto selector switch in the manual position.
- Place the pump hand, off, auto selectors in the OFF position.
- Place the digester valve operators to Tanks 1 through 7 in the local operation position.

After energizing the control panel:.

- Clear all valve failure alarms.
- Place digester fill valve operators to tanks 1 through 7 in the remote operation position.
- Enter into the batch controller the number of gallons which is to be distributed to each of the digesters.
- Select first tank to receive sludge and set the service in/out service to in service position.
- Make sure valves in proper position.
- Set the batch manual/auto selector in the AUTO position.
- Make sure the circuit breakers are closed in the CC.
- Make sure the local disconnects are in the closed position.
- Make sure the pumps are mechanically ready in accordance with manufacturer recommendations.
- Make sure the seal water system is prepared to deliver seal water to the pumps.
- Make sure all appropriate upstream and down stream valve are in the proper position.
- Place the HAND-OFF-AUTO switch in the AUTO position.
- Check the run lamps to make sure the proper pump is running.
- Make sure the seal water system is delivering to operating pumps.
- Check flow meter FE-15 to make sure proper delivery flow rates are occurring.

b. SHUTDOWN

- Turn the HAND-OFF-AUTO switch to the OFF position.
- Make sure the seal water solenoid valve closed.
- Open the local disconnect.

NOTE

If maintenance is to be performed on a pump, open the circuit breaker on the MCC and engage the locking device. Follow approved **Lockout/Tagout** procedures (See Chapter VI, Safety).

(4) ALTERNATE OPERATION

In the event of suction piping plugging, one pump may take suction through the suction line associated with the other pump.

Under manual operation sludge may be pumped to digesters 1 through 5 or 6 and 7 by opening and closing valves.

First select the digester to be batched, then open its associated fill valve. Place the batch manual/auto selector switch in the MANUAL position. Pump hand, off, auto selectors are in the AUTO position, and the auto sequence level only selector should be in the LEVEL ONLY position. Set the manual batch quantity by entering the batched amount and pressing the batch reset. At the end of the batch a light will appear on the batch processor. No alarm is given.

The mixed sludge pump station wet well may also be bypassed by setting the appropriate valves.

(5) MONITORS AND ALARMS

Each mixed sludge pump has a run indication lamp and an elapsed time meter located in the instrumentation control panel. In addition, pump failure alarms are annunciated, after a time delay, in the control panel if the limit switch on the discharge check valve does not open when a pump is activated. If a pump fails, the lag pump will automatically operate when the level in the wet well reaches the lag pump probe.

Totalized flow to each digester No. 1 through 5 along with totalized flow through FE-15 during manual operation are indicated on the control panel. Flow controller is also located in the control panel.

Alarms are annunciated in the control panel when the high level float is reached in digester No. 1 through 5. A pushbutton reset must be pushed to reset a high level alarm.

Alarms are annunciated in the control panel if a digester fill valve fails to open or close during a batch fill cycle. A pushbutton reset must be pushed to reset a valve failure alarm.

Valve position for each digester No. 1 through 7 fill valves along with the isolation valves for digester No. 1 through 5 and digesters No. 6 and 7 are in located in the control panel.

C. SLUDGE GRINDER EQUIPMENT: MSPS-SG-1, 2, and 3

(1) DESCRIPTION

The Sludge Grinder Equipment is provided to grind the sludge before it enters the Mixed Sludge Pumping Equipment. (See Figure III-PO-ADTG-1)

The sludge grinder equipment consists of three Sludge Grinders, designated MSPS-SG-1, 2, and 3.

Each sludge grinder is an in-line, vertical unit, motor driven through a gear reducer with two shafts. The two shafts of each grinder are fitted with intermeshing cutters, which counter- rotate to grind the sludge.

The sludge grinders have a rated capacity of matching the capacity of the mixed sludge pumps.

(2) NORMAL OPERATION

Under normal operation, one sludge grinder is required to be in operation with each pump.

Each sludge grinder is provided with a START, STOP/RESET push buttons, a HAND/OFF/AUTO control switch and overload and run indicating lights, all located at the Sludge Grinder Control Panels. An ON/OFF selector switch with a run indicating light is provided for each sludge grinder at the MSPS Control Panel. A TEST push button is located at each unit.

Under normal operation when the selector switch at the control panel is in the AUTO position, the grinder will start automatically whenever the associated pump is operating.

(3) START-UP AND SHUTDOWN PROCEDURES

To start up and shut down the Sludge Grinder Equipment, use the following procedures:

a. START-UP

- Make sure all valves are in the proper position.
- Close the circuit breaker on the MCC.
- Switch control at the unit to the AUTO position.

b. SHUTDOWN

- Turn the selector switch to the OFF position at the Sludge Grinder Control Panel.

NOTE

If maintenance is to be performed on a sludge grinder, open the circuit breaker on the MCC and engage the locking device. Follow approved **Lockout/Tagout** procedures (See Chapter VI, Safety).

(4) MONITORS AND ALARMS

Each Sludge Grinder Control Panel is designed to sense an overload condition and automatically respond by momentarily reversing the direction of rotation. Grinder shutdown will occur in response to the overload condition after reversing its direction three times. If a grinder shutdown occurs, the sludge feed pumps also shut down while sequencing a shutdown of all other associated equipment. An audible and visual alarm indication is provided on the annunciator at the MSPS.

The Remote Transmission Unit in the MSPS continuously scans and transmits the condition of all alarm points and running indication to the SCADA system.

D. PLANT WATER PUMPS: NO. 1, NO. 2, AND NO. 3; PLANT WATER JOCKEY PUMP

(1) DESCRIPTION

The plant water pumping system provides plant water to the Generator Building,, Mixed Sludge Pumping Station, Anaerobic Digesters No. 6 and No. 7 and Sludge Control Building "C". Provisions are made at several points in the piping distribution system for future connections to the system. Plant water is metered prior to flowing into the distribution system.

The plant water pumping system equipment consists of three plant water pumps, one plant water jockey pump, associated drive units and controls, and an air break tank.

The plant water pumps are end suction, top discharge, constant speed centrifugal water pumps driven by 7-1/2 HP motors. Each pump has a nominal duty point of 100 gpm at a head of 150 ft while operating at 3500 rpm.

The plant water jockey pump is a side suction, top discharge, constant speed, single stage horizontal turbine pump driven by a 2 hp motor. The pump has a nominal duty point of 5 gpm at a head of 200 ft while operating at 3500 rpm.

The air break tank serves two functions. The first, in conjunction with the float operated angle valve, is to provide a physical break between the potable City water supplying the tank and the non-potable plant water system. This break precludes possible contamination of the potable water system with non-potable water. The second purpose is to provide a suction reservoir for the plant water pumping system. The air break tank is a galvanized steel tank, 4 ft in diameter by 9.5 ft deep. By adjusting the float on the angle valve, the high water level in the tank (water level at which the angle valve closes) should be maintained at approximately 12 inches below the top of the tank.

The float operated angle valve is a 6-inch Clayton Model 1240-0IA valve, with a maximum continuous flow rating of 1800 gpm. The valve is hydraulically operated, diaphragm actuated with the pilot control and float mechanism mounted on the cover of the main valve. The float positions the pilot control to close the valve when the float contacts the upper stop, and to open the valve when the float contacts the lower stop. Control of valve closing and opening levels is achieved by setting the points of the stops on the float rod.

The plant water system control panel is located in the Mixed Sludge Pump Station. The control panel indicates instantaneous flow, totalized flow of plant water system and shows the lead lag position of working equipment, run status, failure alarms for all pumps, high level, low level tank alarms, high flow alarm, hand, off, auto selectors, elapsed time meters and failure reset switches. The interior of the panel houses the drum programmer which is used as an alternator, terminal strips, relays, process alarms and fuse blocks for the system logic.

(2) NORMAL OPERATION

Under normal operation, the pumping, system is controlled by a drum programmer based on system pressure and flow. The Jockey pump normally operates to maintain system pressure under low flow conditions. When either the flow rate increases to 25 gpm or the pressure drops below 40 psig, the lead water pump starts and the Jockey pump shuts off. If flow exceeds 100 gpm, the lag water pump starts and continues to run until the flow drops below 100 gpm. The lead pump shuts off and activates the Jockey pump when the flow rate drops to less than 25 gpm..

During normal operation the suction and discharge butterfly valves for each plant water pump (B-M-1-1, B-M-1-2, BM-1-3, B-M-1-4, B-M-1-5 and BM-1-6) are open,. along with the suction and discharge gate valves on the plant water jockey pump. This allows each pump to start and stop based on system demand. Each pump has a discharge check valve to prevent back flow.

The pumping system operates on a demand basis. During periods of no system demand, the plant water pumps do not operate; only the plant water jockey pump is on line to maintain system pressure. Excessive pressure is relieved back to the air break tank through a pressure relief valve initially set to relieve at a pressure of 80 psig.

The system is designed to operate at approximately 65 psig. However, each pump can ride on its curve to provide a range of 60 - 75 psig as system demand dictates.

(3) START-UP, SHUTDOWN PROCEDURES

a. START-UP

- Make sure the circuit breakers are closed in the MCC.
- Make sure the local disconnects are in the closed position.
- Make sure the pumps are mechanically ready in accordance with manufacturer recommendations.
- Make sure the seal water system is prepared to deliver seal water to the pumps.
- Make sure all appropriate upstream and downstream valves are in the proper position.
- Open the feed valve to the water tank and allow the tank to fill.
- Place the water pump HAND-OFF-AUTO switches in the AUTO position and the
- Jockey water pump on/off switch in the ON position.
- Check the run lamps to make sure the proper pump(s) are operating.

b. SHUT-DOWN

- Make sure all systems connected to the water pumps are shut down.
- Turn the HAND-OFF-AUTO switches to the OFF position and turn the on/off switch to the OFF position.
- Open the local disconnect and close the suction and discharge isolation valves if maintenance is to be performed.

(4) ALTERNATE OPERATION

In the event of system control failure, the pumping system can be operated in a manual mode.

The water pumps may be operated manually by placing the HAND-OFF-AUTO switches in the HAND position. If operated in HAND, the pumps will bypass all protective devices. Constant operator attention is therefore required.

Each of these water pumps and the jockey pump are equipped with limit switches on the discharge check valves. A pump foil alarm will be annunciated on the Generator Building Control Panel if a check valve fails to open, after a time delay, once a pump is started. A reset pushbutton located in the Generator Building Control Panel must be pushed to reset a pump fail alarm.

Each pump is provided with a run indication lamp which illuminates the Generator Building, Control Panel when a pump is in operation.

The water pumps are equipped with a selector switch to designate which pump is lead, lag and standby.

(5) MONITORS AND ALARMS

The water tank is equipped with a low and high level alarm which is annunciated in the Generator Building control panel.

The water system is furnished with a high flow rate alarm.

E. SUMP PUMPS: NO. 1 AND NO. 2

The sump pumping equipment in the Mixed Sludge Pumping Station consists of one sump with one duplex pumping system, associated control panel, cover plate and frame and sump level controls.

For a complete description of the sump pumping equipment, operation and control, refer to the section headed "Sump Pumping Equipment".

F. HOISTING EQUIPMENT

The hoisting equipment in the Mixed Sludge Pumping, Station consists of one 2-ton capacity monorail with electric hoist and trolley. For a complete discussion of the hoisting equipment, operation and control, refer to the section headed "Hoisting Equipment".

G. HEATING, VENTILATING AND AIR CONDITIONING EQUIPMENT

(1) DESCRIPTION

The ventilation system consists of Supply Fan FS-1 and Exhaust Fans EF-I and EF-2. The control room is cooled or heated by a roof top air conditioning unit AC-1.

(2) NORMAL OPERATION

Supply Fan: FS-1 and Exhaust Fans: EF-I and EF-2 are powered f rom MCC-40. A HAND-OFF-AUTOMATIC selector switch located on MCC-41 controls the operation of these fan. When the selector switch is in the automatic position all three fan are energized through the thermostat. The thermostat should be set at approximately 85°F. When the temperature is below 85°, the ventilation system will be off. When the temperature is above 85°F, the three fans will be energized. When the selector switch is in the hand position, the thermostats will be over-ridden and the fans will run continuously.

AC-1 is powered from MCC-40 with an ON-OFF switch. When the switch is placed in the ON position the AC unit is energized through its controls. Continued operation will be dependent on a heat-cool thermostat. The cooling cycle should be controlled at approximately 78°F and heating at approximately 68°F. The cooling is supplied from a standard direct expansion air cooled system and the heating is supplied by an electric strip heater.

Fans SF-1 and EF-I and EF-2 are stopped by placing the selector switch in MCC 41 to the OFF position.

AC Unit I is stopped by placing the switch for AC-1 in MCC 41 to the OFF position.

H. POWER DISTRIBUTION SYSTEM

(1) DESCRIPTION

The power distribution system is shown in detail on the contract plans and various shop drawings. Refer to Table III-PR-MSPS-1, Mixed Sludge Pumping Station - Facility Equipment Summary, for contract plan and shop drawing number with pertain to the power distribution system.

(2) NORMAL OPERATION

Electricity is furnished from two independent 277/480 volt, 3 phase, 4 wire grounded wye Each feeder is protected by a normally closed circuit breaker at the source pad mounted transformers. The feeder from transformer T5B-2 is 1200 ampere capacity and terminates on a normally closed main circuit breaker in switchboard MS-40. The feeder from transformer T5A-2 has a capacity of 1200 amperes and terminates on a normally closed main circuit breaker in switchboard MS-41. A tie breaker, located in MS-40, is provided between switchboard MS-40 and MS-41 and is normally open.

(3) START-UP AND SHUTDOWN PROCEDURES

a. START-UP

It is generally recommended that if electric power is not available as indicated on the voltmeters of the switchboards MS-40 and MS-41, that the main breakers be opened. Then all breakers on the switchboards MS-40 and MS-41, and the Motor Circuit Protectors of MCC-40 and MCC-41 should be opened. Verify that the breakers at the pad mounted transformers T5A-2 and T5B-2 feeding MS-40 and MS-41 are closed. Once power is restored, as indicated on the voltmeter of the switchboard, the main breaker may be closed. Closing sequences should be as follows:

1. Switchboard MS-40
   (a) Close breaker to power the local dry type transformer and Panel A. This should make the power available for receptacle and lights in the Mixed Sludge Pumping Station.
   (b) In the Generator Building, be sure the breaker is open that feeds to the preferred side of the 150A, automatic transfer switch is open.
   (c) Close breaker to the Generator Building.
   (d) In the Digester Building, in MCC-45, open the main breaker.
   (e) Close breaker to the Digester Building.
   (f) Close breaker to MCC-40.
   (g) Close Motor Circuit Protectors one at a time on MCC-40.

2. Switchboard MS-41
   (a) In the Digester Building in MCC-41 open the main breaker.
   (b) Close breaker to Digester Building.
   (c) Close breaker to MCC-41.
   (d) Close Motor Circuit Protectors one at a time on MCC-41

b. SHUTDOWN

To shut the electrical system down, the procedures for shutting down the Generator building and the Digester Building should be first performed.

1. Switchboard MS-41
   (a) Open Motor Circuit Protectors on MCC-41 in any order desired.
   (b) Open breaker in MS-41 feeding MCC-41.
   (c) Open breaker to Digester Building MCC-45
   (d) Open Main Breaker.

2. Switchboard MS-40
   (a) Open Motor Circuit Protectors on MCC-40 in any order desired
   (b) Open breaker in MS-40 feeding MCC-40.
   (c) Open breaker to Digester Building MCC-44.
   (d) Open breaker to Generator Building.
   (e) Open breaker to local dry type transformer and Panel "A".
   (f) Open main breaker

(4) ALTERNATE OPERATION

In order to maintain transformer T5A-2, T5B-2, Feeder T-5A-2-1, or feeder T-5B-2-1, all load must be removed from that element. The load, to the capacity of the transformer or feeder being used, can be shifted by means of the tie breaker in MS-40 to the other transformer or feeder. First the shutdown procedure for the load of the switchboard to be shifted should be followed. The tie breaker, if closed with both main breakers closed, will cause one of the main breakers to trip on ground fault. It cannot be predicted which will open. Therefore, the desired main breaker should be opened before the tie breaker

is closed. The system is designed to carry approximately 2/3 of the total demand load. However, since the design includes capacity for a future digester, it is anticipated that the full demand load can be run on either transformer or feeder.

Once the tie breaker is closed, it is recommended that the electrical load be picked up as outlined in the start up procedure. As each load is added, the active ammeter should be observed. If the steady state current reaches 1000 amperes, loads should be turned off that need not run until repairs are complete.

III-PR-ADT - ANAEROBIC DIGESTION FACILITIES (021, 028, 029, 033, 072, 074, 079)

A. GENERAL

The Anaerobic Digestion Facilities include the following structures and equipment:

- Four 75-foot diameter digestion tanks and Sludge Control Building A
- One 95-foot diameter digestion tank and Sludge Control Building B
- Two 110-foot diameter digestion tanks and Sludge Control Building C
- Sludge Gas Mixing Equipment
- Sludge Circulating Pumps
- Digested Sludge Pumps
- Sludge Heat Exchangers
- Dual Fuel Water Heaters
- Waste Gas Burner Pad No. 1 and Waste Gas Burners
- Sludge Metering Equipment
- Sludge Gas Metering Equipment
- Sludge Gas Condensate Collection System
- Combustible Gas Detection System
- Sump Pumps
- Hoisting Equipment
- Plant Water
- Effluent Water
- Ventilation
- Power Distribution

The purpose of these facilities is to anaerobically digest combined primary and waste activated sludges. Sludge is typically pumped to the Anaerobic Digestion Facilities from the Mixed Sludge Pumping Station (refer to Section III-PR-MSP). Sludge may also be pumped to the Anaerobic Digestion Facilities directly from the Sludge Pumping Stations at each Primary Sedimentation Tank (refer to Section III-PR-PST), the Floating Biological Solids Thickeners (refer to Section III-PR-FBS), the Gravity Thickeners (refer to Section III-ST-STB), or the Belt Thickener Building (refer to Section III-ST-BTB). Digested sludge is pumped to the Control Building and Digested Sludge Storage Tanks (see Figure III-PR-ADTG-1). Digested sludge may also be pumped to adjacent sludge drying beds. Sludge Gas, a byproduct of the anaerobic digestion process is used as fuel for power generation (see Section III-PO-PG), for fuel to heat jacket water in the dual fuel water heaters as described hereinafter, or may be flared off via the waste sludge gas burners.

Refer to Table III-PR-ADTS-I, Anaerobic Digestion Facilities - Facility Equipment Summary, for control numbers, manufacturers, equipment capacities, and operation, maintenance, contract plan and shop drawing references. Refer to the Contractor's O & M Manuals for Manufacturer's Service Manuals pertaining to equipment located in the Anaerobic Digestion Facilities.

B. PROCESS CONTROL - ANAEROBIC DIGESTION

(1) DESCRIPTION

The anaerobic digestion process at Tampa is a high rate digestion process which permits greater solids loading rates than either single stage digestion (no mixing) or two stage digestion (completely mixed and heated first stage followed by unmixed heated or unheated second stage). Also separation of scum is minimized in a high rate digestion process. Two stage digestion is an alternative, but uncommon, mode of operation in Tampa.

The anaerobic digestion process depends upon numerous parameters being maintained within narrow limits to insure stable operation and therefore good volatile solids reduction and good sludge gas production. Such parameters are identified under Subparagraph (2) Measurements and Analysis. In the process, acid forming bacteria change organic matter to organic acids, to sludge gas, and stabilized solids.

The main purposes of the anaerobic digestion process are as follows:

- To decompose putresible organic matter in the sludge (primary, waste activated or combination thereof) to relatively stable inert organic and inorganic compounds. In doing so, the total pounds of solids as well as a large part of the most objectional components of the sludge which must be ultimately disposed of are greatly reduced.

- To produce sludge gas, comprised largely of methane (approximately 60 percent by volume), carbon dioxide (approximately 35 percent by volume) and other gases such as nitrogen, hydrogen, hydrogen sulfide and oxygen (approximately 5 percent by volume). The sludge gas is used as fuel for electrical power generation or to heat jacket water for sludge heating, or flared at waste gas burners.

- To control or destroy odor causing bacteria, pathogenic bacteria and parasitic organisms

(2) MEASUREMENTS AND ANALYSIS

a. pH

The pH in the digestion tanks is an indication of conditions affecting the digestion by the microorganisms. The pH should be in the range of 6.8 to 7.4 for optimum digestion. Higher or lower pH readings indicate improper conditions which may require pH adjustment. Several chemicals, such as lime, ammonia, soda ash and sodium hydroxide, are available for pH adjustment. The choice will depend upon factors such as price, availability and handling requirements.

b. TEMPERATURE

The temperature in the digestion tank affects the rate of digestion. The minimal temperature for EPA Section 503 Sludge Regulations is 95 degrees Fahrenheit. The optimal temperature is 97 degrees Fahrenheit.

c. VOLATILE SOLIDS

Volatile solids (VS) loading to the digestion tank should be in the range of 0.11 to 0.40 pounds of volatile solids per cubic foot of digestion tank volume per day at annual average conditions. Substantially higher VS loading rates can cause an increase in volatile acid production. A well digested sludge should show a reduction of influent VS of about 50 percent.

d. VOLATILE ACIDS

Volatile acids are formed as acid forming bacteria change simple organic material (volatile solids) to organic acids. Volatile acids are then used as food for the slower growing methane forming bacteria. The volatile acid concentration in a normal "healthy" digestion tank will be in the range of 50 to 300 mg/1 expressed as acetic acid. A substantial increase in volatile acid concentration can be attributed to high volatile solids loading (i.e. acid formers producing more food than the slower growing methane formers can use), toxic loading which has killed off the methane formers or other occurrence which has reduced the population of methane forming bacteria.

e. ALKALINITY

The alkalinity in a digestion tank is a measure of the buffering capacity or the digester's ability to resist a change in pH. Alkalinity in a digester may come from three sources:

- That already present in the incoming sludge
- That which is a byproduct of the digestion process
- That which is added (in the form of lime soda ash or ammonia) to make up for an alkalinity deficiency

Normal concentrations of alkalinity are in the range of 1,000 to 5,000 mg/1.

f. VOLATILE ACIDS TO ALKALINITY RATIO

The volatile acids to alkalinity ratio (VA/ALK) should be low. Optimum digestion process performance requires that the VA/ALK ratio be less than 0.25.

g. GAS PRODUCTION

Gas production in a normal healthy digestion process is in the range of 12 to 15 cubic feet sludge gas per pound of volatile solids destroyed.

(3) PROCESS CONTROL

a. TEMPERATURE

The best temperature for bacterial activity will be somewhere between 90 and 99 degrees F. The best temperature will provide the following results:

- Highest sludge gas production per pound of volatile solids destroyed
- Volatile acid to alkalinity ratio of less than 0.25
- pH will remain in the 6.8 to 7.4 range

The minimal temperature for EPA Section 503 Sludge Regulations is 95 degrees Fahrenheit. The optimal temperature is 97 degrees Fahrenheit.

(4) VOLATILE ACIDS TO ALKALINITY RATIO (VA/ALK)

The VA/ALK ratio is determined by the results of laboratory analysis for volatile acids and alkalinity. The VA/ALK ratio may vary from 0.1 to 0.35 in the digestion process in general, however, each individual plant will have its own upper limit, determined by operating experience, beyond which the digestion process will go sour and sludge gas production rate will decrease. To be safe, a VA/ALK ratio of 0.25 or less should be maintained. The VA/ALK ratio should be checked three times per week.

a. pH

The pH of the digestion tank must be in the range of 6.8 to 7.4 for optimum process performance. The pH should be checked at least once per shift.

CAUTION

Because of the alkalinity in the digestion tank, the pH will change very slowly and, therefore, is not a reliable indicator of impending process problems. The VA/ALK ratio is much more indicative of impending process problems.

(5) REFERENCES

This manual does not include detailed discussion of the anaerobic digestion process. Several references are available which provide a more extensive discussion of the subject. Several excellent references are as follows:

- Operation Manual, Anaerobic Sludge Digestion, EPA-430/0-76-001, February 1976
- Field Manual for Performance Evaluation and Trouble Shooting at Municipal Wastewater Treatment Facilities, EPA-430/9-78-001, January 1978
- Wastewater Treatment Plant Design, WPCF MOP NO. 8
- Operation of Wastewater Treatment Plants, WPCF MOP No. 11

C. ANAEROBIC DIGESTION TANKS

(1) DESCRIPTION

a. 75-FOOT DIAMETER DIGESTION TANK WITH GAS HOLDER COVERS

Each of the four 75-foot diameter digestion tanks has a maximum liquid depth (at the straight side wall) of 22 feet 6 inches. Digestion Tanks Nos. 1, 2 and 3 have a capacity of 112,000 cubic feet (837,760 gallons). Digestion Tank No. 4 (having a deeper conical section) has a maximum capacity of 115,000 cubic feet (860,000 gallons).

The four 75-foot diameter digestion tanks are arranged in a square pattern (110 feet center line to center line) with access and piping connections via centrally located Sludge Control Building A (see Figure III-PR-ADTG-2).

A floating gas holder type cover has been installed on each of the four 75-foot diameter digestion tanks to provide for storage of the sludge gas which is used as fuel for Power Generation (refer to Section III-PO-PG) and as fuel for the dual fuel water heaters. Each gas holder cover has a storage capacity of 22,500 cubic feet of sludge gas providing a total storage capacity of 90,000 cubic feet of sludge gas within the four gas holder type covers.

Each 75-foot diameter digestion tank is a high rate digester with internally mounted gas mixing tubes to provide continuous mixing of the tank contents. Digested sludge is pumped from each digestion tank to separate facilities for dewatering (either sand drying beds or mechanical dewatering).

b. 95-FOOT DIAMETER DIGESTION TANK WITH FLOATING COVER

The 95-foot diameter digestion tank has a maximum liquid depth (at the straight side wall) of 25'-6". Digestion Tank No. 5 has a capacity of 213,900 cubic feet (1,600,000 gallons).

The 95-foot diameter digestion tank with dual deck floating cover is located south of the 75-foot diameter tanks. Sludge Control Building "B" is located on the east side of Digestion Tank No. 5 (see Figure III-PR-ADTG-2).

The dual deck floating cover has been installed on the 95-foot digestion tank to permit variable sludge liquid depths in the digestion tank.

The 95-foot digestion tank is a high rate digester with internally mounted gas mixing tubes to provide continuous mixing of the tank contents. Digested sludge is pumped from the 95-foot digestion tank to separate facilities for dewatering.

c. 110-FOOT DIAMETER DIGESTION TANKS WITH FLOATING COVERS

The 110-foot diameter digestion tanks have an operating sidewater depth varying between 30.5 ft. and 34.5 ft.. Digestion Tanks No. 6 and No. 7 have a capacity of 328,000 cubic feet (2,450,000 gallons).

Anaerobic Digesters No. 6 and No. 7 are located south of the Anaerobic Digesters No. 1 through No. 4 and east of Anaerobic Digester No. 5. Sludge Control Building "C" is located between Anaerobic Digesters No. 6 and No.7 (see Figure III-PR-ADTG-3).

Floating covers have been installed on the 110-foot digestion tanks to permit variable sludge depths in the tanks.

The 110-foot digestion tank is a high rate digester with internally mounted gas mixing tubes to provide continuous mixing of the tank contents. Digested sludge is pumped from the 110-foot digestion tank to separate facilities for dewatering.

See Figures III-PR-ADTG-4 and III-PR-ADTG-5 for the typical plan and section of the Anarerobic Digestion Tanks.

(2) NORMAL OPERATION

Under normal operation, Digestion Tanks Nos. 1 - 7 are in service to anaerobically digest sludge from sources described herinbefore.

Four modes of operation of the anaerobic digestion system are available. In summary, the modes are:

- Primary Mode - Single stage digestion of combined sludges. Primary sludge and scum, and waste activated sludge are combined at the Mixed Sludge Pumping Station, and are pumped to Anaerobic Digesters No. 1 - No. 7 where they are heated and digested; no supernatant is withdrawn.

- Alternate Mode of Operation No. 1 - Single stage digestion of separate sludges. Primary sludge and scum are heated and digested in Digesters No. 1 - No. 5; waste activated sludge is heated and digested in anaerobic Digesters No. 6 and No. 7; no supernatant is withdrawn.

- Alternate Mode of Operation No. 2 - Two stage digestion of combined sludges. Primary sludge and scum, and waste activated sludge are pumped to Anaerobic Digesters No. 6 and No. 7 for first stage (mixed and heated) digestion; sludge from Anaerobic Digesters No. 6 and No. 7 is transferred to Anaerobic Digesters No. 1 - No. 5 for second stage (unmixed, unheated) digestion; supernatant can be withdrawn from Anaerobic Digesters No. 1 - No. 5.

- Alternate Mode of Operation No. 3 - Two stage digestion of combined sludges. Primary sludge and scum, and waste activated sludge are pumped to the Mixed Sludge Pumping Station and from there are pumped to Anaerobic Digesters No. 1 - No. 5 for first stage (mixed and heated) digestion; sludge from Anaerobic Digesters No. 1 - No. 5 is transferred to Anaerobic Digesters No. 6 and No. 7 for second stage (unmixed, unheated) digestion; supernatant can be withdrawn from Anaerobic Digesters No. 6 and No. 7.

(3) START-UP, SHUTDOWN AND DEWATERING PROCEDURE

a. START-UP

1. General

- Refer to Figures III-PR-ADTG-1, -2 and -3, make sure that all valves required to permit raw sludge feed, sludge circulation and sludge gas withdrawal are open
- Fill selected digestion tank to minimum liquid level with the primary sedimentation tanks effluent pumped from the Sludge Pumping Station
- After the selected digestion tank is filled, start up the following associated equipment as described elsewhere in this section: sludge gas mixing equipment, sludge circulating pumps and sludge heat exchangers
- Start sludge circulating pump to circulate digestion tank contents thru heat exchanger and back to tank

- Continue operation until tank contents have been heated to reach the target temperature

2. Seeding
   - Pump seed sludge into the digestion tank being started up from the active digesters
   - Continue mixing digestion tank contents
   - Continue circulating digestion tank contents and applying jacket water as required to maintain temperature at the target

3. Feeding
   - For first 5 days, feed sludge at 10 percent of design loading rate of 0.084 lb.. VS/CF/Day

NOTE

Digestion Tank Volumes are as follows:

No. 1 = 112,000 CF =	837,760 gal
No. 2 = 112,000 CF =	837,760 gal
No. 3 = 112,000 CF =	837,760 gal
No. 4 = 115,000 CF =	860,000 gal
No. 5 = 213,900 CF =	1,600,000 gal
No. 6 = 328,000 CF =	2,450,000 gal
No. 7 = 328,000 CF =	2,450,000 gal

then:

To calculate quantity of sludge to be pumped to a digestion tank, use the following equations:

$$TS = (0.084 \text{ Lb. VS/CF/Day} \times D_v \times DL) \div VS$$

where:

TS = Total Solids to Digestion Tank, Lbs.. TS/Day
D_v = Digestion Tank Volume, CF
DL = Percent of Design Loading to be Fed, percent
VS = Percent Volatile Solids, percent

and:

$$Q = TS \div (8.34 \times C)$$

where:

Q = Sludge Quantity to Digestion Tank, MGD
TS = Total Solids to Digestion Tanks, Lbs. TS/Day
C = Combined Sludge Concentration, mg/l

EXAMPLE

Calculate quantity of sludge to be pumped to Digestion Tank No. 1 for first five days.

D_v = 112,000
DL = 10%
VS = 73% (Assumed)
C = 50,000 mg/l

then,

$$TS = \frac{0.084 \text{ lb. VS}}{\text{CF - Day}} \times 112{,}000 \text{ CF} \times 0.10 \div 0.73 \frac{\text{Lb. VS}}{\text{Lb. TS}}$$

= 1,289 Lbs. TS/Day

and,

Q = (1289 Lb. TS/Day) ÷ (8.34 x 50,000 mg/l)
= 0.003 MGD = 3,000 gpd

NOTE

If digestion tank is filled to maximum liquid level, an equal volume of sludge must be withdrawn before the combined sludge quantity is fed.

- For second 5 days, increase combined sludge feed to about 20 percent of design loading rate
- For each subsequent 5 day period, increase combined sludge feed by an additional 10 percent of the design loading rate until the design loading rate is achieved

For Digestion Tank No. 1, then if combined sludge concentration is 50,000 mg/l: 2

5 Day Period	Raw Primary Sludge Quantity
1st	3,000 gpd
2nd	6,000 gpd
3rd	9,000 gpd
4th	12,000 gpd
5th	15,000 gpd
6th	18,000 gpd
7th	21,000gpd
8th	24,000 gpd
9th	27,000 gpd
10th	30,000 gpd

NOTE

Program may be accelerated (or decelerated) depending upon process stability.

4. Monitoring
   - Liquid Level:

Do not fill above maximum liquid level (El. 18'-0" for Digestion Tanks Nos. 1, 2, 3 and 4; El. 21'-0" for Digestion Tank No. 5; and El. 46'-0" for Digestion Tanks Nos. 6 and 7)

Do not withdraw below minimum liquid level (El. 11'-9" for Digestion Tanks Nos. 1, 2, 3 and 4; El. 13'-0" for Digestion Tank No. 5; and El. 42'-0" for Digestion Tanks Nos. 6 and 7)

NOTE

Liquid level parameters may be changed due to process changes.

- Process Parameters for Optimal Digestion:
  pH - maintain between 6.8 and 7.4
  Temperature - 97 degrees F
  Volatile Solids Loading - See B2d. above
  Volatile Acids 50 to 300 mg/l as acetic acid
  Alkalinity - 1,000 to 5,000 mg/l
  Volatile Acids to Alkalinity Ratio VA/ALK ‹ 0.25
  Gas production - 12 to 15 CF/LB. VS destroyed, or 6 to 8 CF /LB. added

b. SHUTDOWN AND DEWATERING
   - Cease pumping raw sludge to the selected digestion tank
   - Cease circulating tank contents thru heat exchanger

NOTE

Sludge gas will continue to be produced. If tank is not to be dewatered immediately as described hereinafter, sludge gas withdrawal valves <u>must</u> remain in the OPEN position

- Shutdown the following associated equipment as described elsewhere in this section: sludge gas mixing equipment, sludge circulating pumps and sludge heat exchangers

- Using either a digested sludge pump of a sludge circulating pump (or both) pump the digestion tank down to the minimum liquid level (El. 11'-9" for Digestion Tanks Nos. 1, 2, 3 and 4; El.

13'-0" for Digestion Tank No. 5; and El. 42'-0" for Digestion Tanks Nos. 6 and 7) and then cease pumping

- Using the waste sludge gas burners draw sludge gas storage down to the minimum (cover on the selected digestion tank will be resting on corbels)

- Close the valve on the sludge gas withdrawal line on the selected digestion tank

- Manually open the pressure relief and vacuum breaker valve to vent remaining sludge gas

CAUTION

Sludge gas is extremely flammable. Explosion-proof tools and equipment must be used and personnel must exercise extreme care while sludge gas is venting.

- Open the two 27-inch manholes to permit additional ventilation (place temporary safety barrier around open manholes)

- After the two preceding steps have been accomplished, then continue dewatering with digested sludge pump and/or sludge circulating pump

CAUTION

Refer also to Chapter VI - Safety for additional precautions. If personnel are required to enter the tank, positive ventilation of the tank must be provided, and the atmosphere continuously monitored for combustible or toxic gases.

D. SLUDGE GAS MIXING EQUIPMENT

(1) DESCRIPTION

Sludge gas mixing equipment is of the confined gas bubble type and is installed in each of the seven digestion tanks.

The sludge gas mixing equipment includes the mixing tubes, sludge gas mixing compressors together with appurtenant devices which include valves, safety control devices, and gauges.

Digestion Tanks Nos. 1, 2 and 3 each have four mixing tubes which are 15 feet 8-1/4 inches long and 24 inches in diameter. Digestion Tank No. 4 has four mixing tubes which are 16 feet 4 inches long and 24 inches in diameter. Six mixing tubes are installed in Digestion Tank No. 5 and each tube is 19 feet 3 inches long and 24 inches in diameter. Digestion Tanks Nos. 6 and 7 each have six mixing tubes which are 30 feet 1 inch long and 36 inches in diameter.

The mixing tubes are mounted on the floor of each digestion tank The compressors used with the mixing tubes are of the single stage, positive displacement, nonpulsating, liquid-sealed rotary type.

Sludge gas mixing compressors CBA-SGMC-1, 2, 3, 4, 5 and 6 are rated 228 scfm at 7 psig. Sludge gas mixing compressors CBB-SGMC-1 and 2 are each rated 486 scfm at 8 psig. Sludge gas mixing compressors Nos. 1, 2 and 3 are rated 750 scfm at 8 psig.

(2) NORMAL OPERATION

Under normal operation, the sludge gas mixing equipment operates continuously. Sludge gas is withdrawn from the gas dome located at the center of each digestion tank cover via an 8-inch sludge gas pipeline. Each sludge gas mixing compressor compresses the sludge gas and discharges it through a moisture separator and into a 3-inch discharge header. Each 3-inch sludge gas discharge header splits into four 2-inch sludge gas supply lines to supply gas to each mixing tube located in Digestion tanks Nos. 1, 2, 3 and 4. The 3-inch sludge discharge header splits into six 2-inch sludge gas lines to supply gas to each mixing tube located in Digestion Tank No. 5. Digestion Tanks Nos. 6 and 7 are equipped with 8-inch gas headers and six 4-inch gas distribution lines.

Each sludge gas supply line discharges compressed sludge gas through the manifold and diffusers of its associated sludge gas mixing tube. The gas introduced to each mixing tube in this manner produces a gas lift pumping action which circulates sludge through the mixing tube and causes the digestion tank contents to be completely mixed.

(3) START-UP AND SHUTDOWN PROCEDURES

To start-up and shut down the sludge gas mixing equipment, use the following procedure:

a. START-UP

- Start up the associated digestion tank as described elsewhere in this section
- Open valves preceding and following the condensate collector for the selected digestion tank, the valve on the suction side of the sludge gas mixing compressor, the valve on the outlet side of the moisture separator and the valves located in the 2-inch supply lines to each mixing tube and the isolation valve for each mixing tube pressure gauge
- Make sure the effluent water system is operating and open the valves required to supply effluent water to the compressor
- Open the 2-inch globe valve in sludge gas bypass line to relieve gas line pressure to the inlet side of the compressor
- Close the circuit breaker at the Motor Control Center MCC-62 for the selected sludge gas mixing compressor

- Depress the RESET push button at Motor Control Center MCC-62 for the selected sludge gas mixing compressor

- Depress the START push button located at the selected sludge gas mixing compressor

- Slowly close the 2-inch globe valve in the sludge gas bypass line

b. SHUTDOWN

- Depress the STOP push button located at the selected sludge gas mixing compressor

NOTE

If Maintenance is to be performed on the sludge gas mixing compressor, open the associated circuit breaker on the MCC-62, place the ON-OFF switch at the unit in the OFF position and engage the locking device, close the associated manually operated suction and discharge valves and start up the standby unit.

(4) MONITORS AND ALARMS

Each sludge mixing compressor is provided with a red running light and an elapsed time meter, located at the MCC-62.

The annunciator panel located on the Digestion Tank Monitoring Panel (DTMP) contains audible and visual alarms for each sludge gas mixing compressor as follows:

- High Discharge Pressure (Alarm and Shutdown)
- Low Inlet Pressure (Alarm and Shutdown)
- Compressor Failure (Alarm and Shutdown)
- Compressor Seal Water Low Pressure (Alarm Only)

E. SLUDGE CIRCULATING PUMPS

(1) DESCRIPTION

Sludge circulating pumps are used to pump digested sludge through a heat exchanger and back to the appropriate digester from which it was taken. The primary purpose of the system is to provide for digested heating. The sludge circulating pumps are vertical centrifugal type pumps, rated as follows:

Circulation Pump Service	Rated Flow (GPM)	Rated Head (Ft)	No. of Pumps
Digester No. 1	450	24	1
Digester No. 2	450	24	1
Digester No. 3	450	24	1
Digester No. 4	450	24	1
Digester No. 5	575	48	2
Digester No. 6	700	35	2
Digester No. 7	700	35	2

(2) NORMAL OPERATION

Sludge circulating pumps operate continuously at constant speed. For each digestion tank, circulating sludge can be withdrawn from one of two withdrawal pipes as shown in Figures III-PR-ADTG-2 and -3.

(3) START-UP AND SHUTDOWN PROCEDURES

To start up and shut down the sludge circulating pumps, use the following procedures:

a. START-UP

- Open the suction and discharge valves required to circulate sludge from the digestion tank to heat exchanger and back to the digestion tank
- Close the local disconnect
- Make sure that the Jacket Water System is operational
- Make sure the Effluent Water System is operational and open the valves required to supply seal water to the pump
- Close the circuit breaker for selected sludge circulating pump at the appropriate Motor Control Center
- Place the On/Off push button for the selected sludge circulating pump at the appropriate Motor Control Center

b. SHUTDOWN

- Turn the ON/OFF switch to the OFF position
- Open the local disconnect if maintenance is to be performed
- Close the suction and discharge isolation valves if maintenance is to be performed

F. DIGESTED SLUDGE PUMPS:

(1) DESCRIPTION

The Digested Sludge Pumps CBA-DSP-1, CBA-DSP-2 and CBB-DSP-1 and Nos. 1, 2, 3 and 4 are provided to remove anaerobically digested sludge from Digestion Tanks 1 through 7 and pump it to the Sludge Storage Tanks (see Figure III-PR-ADTG-1).

Each digested sludge pump has a rated capacity of 300 gpm at a rated head of 80 feet. Each digested sludge pump is a heavy duty and nonmeshing, dual lobe positive displacement type sludge pump driven by a 30 hp motor and hydraulic variable speed drive.

Each hydraulic variable speed drive is equipped with a ten turn ratio speed control potentiometer and a speed indicator.

(2) NORMAL OPERATION

One digested sludge pump is normally required to pump digested sludge from a selected digestion tank to the digested sludge storage tanks.

The digested sludge removal piping in Control Building A is inter-connected to permit either digested sludge pump to pump digested sludge from any of the four digestion tanks (see Figure III-PR-ADTG-2). Anaerobic Digesters Nos. 6 and 7 each have one on-line and one standby pump.

Under normal operation, when digested sludge is to be withdrawn from a digestion tank, the selected digested sludge pump is started up as described hereinafter and the pump's speed is manually adjusted using the ratio potentiometer on MCC-62 or MCC-45 until the desired sludge pumping rate is achieved. After the desired volume of digested sludge is withdrawn from the selected digestion tank the digested sludge pump is shut down. Pumping should cease before reaching the minimum tank level.

(3) START-UP AND SHUTDOWN PROCEDURES

To start up and shut down the digested sludge pumps, use the following procedures:

a. START-UP

- Open the required suction and discharge valves to permit digested sludge to be withdrawn from the center of the selected digestion tank (see Figure III-PR-ADTG-1)

- Make sure the effluent water system and the seal water booster pumps are operational and open the valves required to supply seal water to the pump

NOTE

Refer to the paragraph headed "Effluent Water" for seal water booster pump operation.

- Close the circuit breaker for the selected digested sludge pump at Motor Control Center MCC-62 or MCC-45

- Place the ON-OFF switch located at the digested sludge pump in the ON position

- Depress the RESET push button at Motor Control Center MCC-62 or MCC-45

- Depress the START push button located on Motor Control Center MCC-62 or MCC-45

- Adjust potentiometer for the selected digested sludge pump on MCC-62 or MCC-45 so that a desired flow rate as indicated on the DTMP device is established

b. SHUTDOWN

- Depress the STOP push button located on Motor Control Center MCC-62 or MCC-45

NOTE

If maintenance is to be performed on a digested sludge pump, open the circuit breaker on MCC-62 or MCC-45 and place the ON-OFF switch at the unit in the OFF position and engage the locking device. Follow approved **Lockout/Tagout** procedures.

(4) MONITORS AND ALARMS

Each digested sludge pump is provided with a red running light and an elapsed time meter located on MCC-62 or MCC-45.

The annunciator panel located on the Digestion Tanks Monitoring Panel (DTMP) contains audible and visual alarms for each digested sludge pump as follows:

- High Discharge Pressure (Alarm and Shutdown)
- Pump Failure (Alarm and Shutdown)
- Pump Seal Water Low Pressure (Alarm Only)

(5) ALTERNATE OPERATION

The hydraulic variable speed drive at each digested sludge pump may be manually adjusted at the unit. A hand wheel control and a speed indicator calibrated in percent of maximum speed is provided on each hydraulic variable speed drive to manually vary the digested sludge pumps' speed. A clutching mechanism must be engaged to enable the hand wheel control.

G. SLUDGE HEAT EXCHANGERS:

(1) DESCRIPTION

The sludge heat exchangers are provided to maintain the digestion tank contents at the required temperature for optimum sludge digestion.

Each sludge heat exchanger is a tube in tube, two pass water to sludge type heat exchanger and is rated at 1,000,000 Btu/hr per pass (2,000,000 Btu/hr total). The sludge heat exchangers for Digestion Tanks Nos. 1, 2, 3 and 4 (CBA-HE-1 and CBA-HE-2) are located inside Sludge Control Building A. The sludge heat exchanger for Digestion Tank No. 5 (CBB-HE-1) is located inside Sludge Control Building B (see Figure III-PR-ADTG-1). Sludge heat exchanger Nos. 1 and 2 for Digestion Tanks No. 6 and 7 are located in Sludge Control Building C.

(2) NORMAL OPERATION

Under normal operation one pass of each of the two sludge heat exchangers in Control Building A is dedicated to one of the four digestion tanks and both passes of the sludge heat exchanger in Control Building B are dedicated to Digestion Tank No. 5. The sludge heat exchangers in Control Building C, Heat Exchanger No. 1 and Heat Exchanger No. 2 are normally used for Anaerobic Digester No. 6 and Anaerobic Digester No. 7, respectively. The sludge circulating pumps described hereinbefore circulate sludge continuously from the associated digestion tank to the dedicated sludge heat exchanger pass or passes and back to the same digestion tank.

A temperature probe mounted in the sludge piping on the inlet to each sludge heat exchanger pass is provided to initiate operation of a motor operated valve on the jacket water supply piping to each pass of each heat exchanger. When the sludge temperature falls below an adjustable set point the jacket water valve is opened to permit heated jacket water to flow through the sludge heat exchanger to heat the sludge. When the sludge temperature rises above an adjustable set point the jacket water valve is closed.

(3) START-UP AND SHUTDOWN PROCEDURES

To start up and shut down the sludge heat exchangers, use the following procedures:

a. START-UP

- Open the required manually operated valves to permit sludge to be circulated from the selected digestion tank to the selected heat exchanger pass and back to the same digestion tank (see Figures III-PR-ADTG-2 and -3)
- Start up Jacket Water System
- Start up Sludge Circulating Pumps

b. SHUTDOWN

- Shut down the associated Circulating Sludge Pump

(4) MONITORS AND ALARMS

Each sludge heat exchanger has a temperature probe mounted in the inlet sludge piping that continuously monitors the circulating sludge temperature. These temperature monitoring probes initiate jacket water flow to each sludge heat exchanger pass and initiate an alarm if the sludge temperature falls outside adjustable upper and lower limits.

The annunciator panel located on the Digestion Tanks Monitoring Panel (DTMP) contains audible and visual sludge alarms for high and low sludge temperature.

H. DUAL FUEL WATER HEATERS: CBA-WH-1 AND 2

(1) DESCRIPTION

Dual fuel water heaters, two each in Control Buildings A and C, are provided as a supplemental heat source for jacket water which supplies heat to the sludge heat exchangers described. (Jacket water is normally

heated by recovering waste heat from Engine Generators as described in Section III-PO-PG, Power Generation.)

Each dual fuel water heater (CBA-WH-1 and 2) has a rated capacity of 3,200,000 Btu/hr input and 2,560,000 Btu/hr output.

Each dual fuel water heater burner is designed to operate with sludge gas as primary fuel and No. 1 oil (diesel) as secondary fuel. Each unit is equipped with a base-mounted oil pump driven by a direct connected 3-phase motor. The oil pump is designed for operation only when burner is firing oil and capable of a minimum 20 feet suction lift from the fuel oil storage tank. A starter for the oil pump is provided at each dual fuel water heater's local control panel.

Changeover to either fuel is achieved by means of a manual Fuel Transfer Selector Switch. When the Fuel Transfer Selector Switch is in the "OIL" position, the unit will fire on oil only. When the Fuel Transfer Selector Switch is in the "AUTO" position, the unit will fire on sludge gas only when the supply pressure is above an adjustable set point and on oil when the supply pressure is below the adjustable set point. (See the Contractor's O & M Manual for a detailed description of dual fuel water heater equipment.)

A water heater booster pump (CBA-BP-1) is installed ahead of the dual fuel water heaters to overcome the extra head loss developed through the dual fuel water heaters.

A 2,000 gallon fuel oil storage tank has been furnished to store No. 1 oil (diesel) for the dual fuel water heaters.

A propane tank with regulator and gauges has been furnished to provide pilot fuel to the dual fuel water heaters when firing on oil.

(2) NORMAL OPERATION

Under normal operation when the dual fuel water heaters are required to provide heat to the jacket water, the dual fuel water heaters will be manually placed into operation and fired on sludge gas.

The water heater booster pump is required to operate to ensure an adequate water flow rate to the water heaters and back into the jacket water system.

(3) START-UP, SHUTDOWN AND AUTOMATIC CHANGEOVER PROCEDURES

a. START-UP

To start up and shutdown the dual fuel water heaters, use the following procedure:

- Close the circuit breaker on MCC-62 for the selected dual fuel water heater

NOTE

It is recommended that the flame safeguard control be powered continuously except when being serviced.

- Begin starting sequence with power applied to control cabinet, Power On lamp lighted, control switch off and all valves closed

- Place the MANUAL-AUTO firing rate control switch in position desired

  (a) With the switch in the MANUAL position, the setting of the manual potentiometer determines the position (and thus the firing rate) that the firing rate motor will run to after the initial low fire start. Firing rate may be manually set for any point between low fire and high fire. Limit and operating controls are still in command of the burner. Burner still starts on low fire regardless of firing rate manually selected.

  (b) With the switch in the AUTO position, the burner firing rate is determined by the firing rate control in conjunction with the manual potentiometer as follows:

    - With the manual potentiometer in the MINIMUM position, the firing rate control, in response to load demands, can modulate the burner firing rate from low fire to 50% of high fire.

    - With the manual potentiometer in the MAXIMUM position, the firing rate control can modulate the burner firing rate from low fire to high fire.

    - Intermediate position of the manual potentiometer will result in intermediate position between 50% and 100% high fire as the maximum firing rate obtainable by the firing rate control.

      - Place fuel transfer switch in the AUTO position. With the switch in the AUTO position, the burner will fire on digester gas only when the digester gas pressure is above the preset adjustable digester gas changeover switch set point

      - Start-up Jacket Water System

      - Open manually operated valves to permit sludge gas flow and jacket water flow to the selected dual fuel water heater

      - Close the circuit breaker at Motor Control Center MCC-62 for the water heater booster pump

      - To start booster pump, depress the START push button at MCC-62

- When firing on digester gas, and the FUEL ON lamp lights indicating pilot flame proven, open the digester manual leak test gas valve to ignite the main burner

b. SHUTDOWN

AUTOMATIC

- Upon the occurrence of a circuit breaker trip at MCC-62 or low sludge gas pressure, the dual fuel water heater will automatically shut down

MANUAL

- Open the circuit breaker on MCC-62 or place the ON-OFF switch at the unit in the OFF position. Burner shuts down as in automatic shutdown

- When burner motor stops, close all manual valves

SAFETY SHUTDOWN

NOTE

See Contractor's O & M Manual for description of Safety Shutdown.

c. AUTOMATIC CHANGEOVER

- Place the fuel transfer switch in the "auto" position

- If the digester gas pressure is above the set point of the digester gas changeover switch and the changeover delay timer has reached the end of its timing, the burner will fire on digester gas

- If at any time during the operating cycle the digester gas pressure falls below the setting of the digester gas changeover switch, the burner shuts down in the Automatic Shutdown mode and, after a delay of approximately 5 seconds, the burner starts again to fire on oil

- If the digester gas pressure rises above the set point of the digester gas changeover switch, the changeover delay begins its timing (approximately 5 hours). At the end of this timing, the burner shuts down. After a delay of approximately 5 seconds, the burner starts again to fire on digester gas

(4) ALTERNATE OPERATION

The Dual Fuel Water Heaters may be operated in a mode where diesel fuel is the only fuel.

Start-up and shutdown for diesel fuel operation is as follows:

a. START-UP

- Close the circuit breaker on MCC-62 for the selected dual fuel water heater

NOTE

It is recommended that the flame safeguard control be powered continuously except when being serviced.

- Begin starting sequence with power applied to control cabinet, Power On lamp lighted, control switch off and all valves closed

- Place the MANUAL-AUTO firing rate control switch in position desired

(a) With the switch in the "MANUAL" position, the setting of the manual potentiometer determines the position (and thus the firing rate) that the firing rate motor will run to after the initial low fire start. Firing rate may be manually set for any point between low fire and high fire. Limit and operating controls are still in command of the burner. Burner still starts on low fire regardless of firing rate manually selected.

(b) With the switch in the "AUTO" position, the burner firing rate is determined by the firing rate control in conjunction with the manual potentiometer as follows:

- With the manual potentiometer in the "minimum" position, the firing rate control, in response to load demands, can modulate the burner firing rate from low fire to 50% of high fire.

- With the manual potentiometer in the "maximum" position, the firing rate control can modulate the burner firing rate from low fire to high fire.

- Intermediate position of the manual potentiometer will result in intermediate position between 50% and 100% high fire as the maximum firing rate obtainable by the firing rate control.

  - Place fuel transfer switch in the OIL position

(c) With the switch in the OIL position, the burner will fire only on oil.

- Start up Jacket Water System

- Open manually operated valves to permit jacket water flow to the selected dual fuel water heater

- Close the circuit breaker at Motor Control Center MCC-62 for the water heater booster pump

- To start booster pump, depress the START push button at MCC-62
- When burner motor starts, open the pilot gas cock
- Open manual oil valves to ignite the main burner

b. SHUTDOWN

AUTOMATIC

- Upon occurrence of circuit breaker trip at MCC-62 or a loss of fuel oil supply, the dual fuel water heater will automatically shut down

MANUAL SHUTDOWN

- Open the circuit breaker on MCC or place the ON-OFF switch at the unit in the off position. Burner shuts down as in Automatic Shutdown

When burner motors stops, close all manual valves

(5) MONITORS AND ALARMS

A 7-light alarm and signal system is provided on each dual fuel water heater's local control panel with pilot lights to indicate the following: power, ignition, fuel type sludge gas or oil, fuel pressure failure, ignition failure and main flame failure. Alarms are wired in series to a set of contacts for transmitting a common "Dual Fuel Water Heater Malfunction" alarm to the Digestion Tanks Monitoring Panel for each unit.

The Dual Fuel Water Heaters are equipped with a 6-inch, 150 pound pressure gauge with shutoff cock, a probe type low water cutoff, a 50 psi boiler relief valve, a modulating operating temperature control (60-240 degrees Fahrenheit), high limit temperature control (60-240 degrees Fahrenheit), a 6-inch dial type temperature gauge to 300 degrees Fahrenheit and a sludge gas manifold pressure switch designed to operate at a minimum inlet pressure of 4 inches W.C.

I. WASTE SLUDGE GAS BURNERS

(1) DESCRIPTION

Four Waste Sludge Burners are provided to flare off excess sludge gas.

Each Wast Gas Burner has a waste gas burning capacity of 20,000 cfh at a pressure loss of not more than 1/2-inch water column. Each waste gas burner assembly includes an automatic sludge gas pilot ignitor with an electronic flame detector. Upon pilot flame failure, the unit will re-ignite the pilot using an automatically initiated spark. Flame failure response time is 3 seconds.

Each Waste Gas Burner has a ring-type pilot that surrounds the waste gas nozzle and provides a curtain of flame through which all waste gas must pass. This design ensures positive ignition regardless of variations in gas flow.

(2) NORMAL OPERATION

Under normal operation the waste sludge gas burners automatically flare off excess sludge gas. Under normal operation both waste sludge gas burners are enabled and ready for automatic operation.

The waste sludge gas burners are connected to the sludge gas header and when the pressure in the header exceeds the pressure set at the waste sludge gas burners' pressure relief valve (indicating an excess amount of gas), the pressure relief valve opens to allow the sludge gas to pass through the waste sludge gas burner and be flared off.

(3) START-UP AND SHUTDOWN PROCEDURES

To start up and shutdown the waste sludge gas burners, use the following procedures:

a. START-UP

- Close the circuit breaker for the selected waste sludge gas burner on Lighting Panel LP-CBA-62
- Open 1-inch pilot line globe valve and appropriate 1/2-inch needle valve
- Activate automatic sludge gas pilot ignitor located at the Waste Gas Burners. If pilot flame fails, the unit will reignite the pilot using an automatically initiated spark. Flame failure response time is 3 seconds
- Open the manually operated valves required to permit sludge gas flow through Meter MSG-2 and to each waste sludge gas burner
- Open the valves on the pressure relief control line

b. SHUTDOWN

- Close the manually operated valve located ahead of the pressure relief valve and flame trap assembly

WARNING

At least one waste sludge gas burner must be operational at all times. Otherwise, excess sludge gas could be vented from the pressure relief valves on each digestion tank cover which could create an extremely dangerous fire or explosive condition.

(4) MONITORS AND ALARMS

Each Waste Gas Burner Assembly has an automatic sludge gas pilot ignitor that includes the electronic flame detector. Upon pilot flame failure the unit will re-ignite the pilot using an automatically initiated spark. Flame failure response time is 3 seconds. The burner assembly is provided with alarm contacts, and signals an alarm condition when the pilot flame fails to re-ignite in 30 seconds. Audible and visual alarm indication is provided on the Digestion Tanks Monitoring Panel (DTMP).

Venturi Flowmeter (MSG-2) meters waste sludge gas to burners and the quantity of waste sludge gas is indicated and recorded on instrument GS-15 on the DTMP.

J. SLUDGE METERING EQUIPMENT

The sludge metering equipment is provided to meter and record the digested sludge withdrawn from the digestion tanks and transferred to the sludge storage tanks (see Figure III-PR-ADTG-1).

Digested sludge flow is metered by flowmeters MS-10 and MS-11 located in Control Buildings A and B, respectively and FE-16 and FE-17 located in Control Building C.

Each meter is a 3-inch magnetic flowmeter with a flow range of up to 500 gpm. Each meter has a teflon lining and is provided with ultrasonic cleaning for the sensing electrodes.

Each flowmeter system consists of a meter, a flow signal indicating transmitter at the meter and an indicating recorder on the Digestion Tanks Monitoring Panel (DTMP).

Each flowmeter is provided with positive zero return feature which drives the associated indicating recorder to zero when no digested sludge pump is operating.

K. SLUDGE GAS METERING SYSTEM:

(1) DESCRIPTION

The Sludge Gas Metering System is provided to meter and record sludge gas.

Meter MSG-1 measures sludge gas provided to fuel the Engine Generators.

Meter MSG-3 measures sludge gas provided to fuel the Dual Fuel Water Heaters.

Meter MSG-4 measures sludge gas withdrawn from Digestion Tank No. 5.

Meter FE-51 measures gas production in Anaerobic Digester No. 6.

Meter FE-52 measures gas production in Anaerobic Digester No. 7.

Meter FE-53 measures gas flow to the waste gas burners.

Meter FE-59 measures gas flow to the waste gas burners.

Each meter is a cast-iron venturi meter. Sludge gas meter ranges are as follows:

The sludge gas metering system consists of eight venturi meters, eight electronic flow indicating transmitters, a summator and three indicating recorders on the Digestion Tanks Monitoring Panel (DTMP).

L. SLUDGE GAS CONDENSATE COLLECTION SYSTEM: RSPS-CT-1 AND 2, CBA-CT-1 AND 2 AND CBB-CT-1 AND 2

(1) DESCRIPTION

Six Sludge Gas Condensate Tanks (RSPS-CT-1 and 2; CBA-CT-1 and 2; CBB-CT-1 and 2) and six Condensate Collectors, (one in the Raw Sewage Pumping Station, and one at each of the five anaerobic digestion tanks) with connecting piping comprise the sludge Gas Condensate Collection System.

Each set of condensate tanks is equipped with condensate level sight glasses, high condensate level float alarm switches, pressure gauges, an access manway for each tank and key-operated plug valves.

Sludge gas condensate collection tanks are provided in pairs in each building allowing condensate to collect and be stored in one tank as the other tank is being drained.

Sludge Condensate Collectors are installed on the sludge gas withdrawal piping at each digestion tank and on the sludge gas fuel supply to the engine generators. Each condensate collector, along with all low points in the sludge gas piping, are arranged to drain to the condensate collection tanks located in the Raw Sewage Pumping Station, Sludge Control Building A, Sludge Control Building B, and Sludge Control Building C. Each set of condensate tanks is designed so that when one tank is full (high level float switch is provided to alarm of full tank), keyed valves can be used to manually place the empty tank in service and isolate the full tank while condensate collected and stored therein is safely drained.

(2) NORMAL OPERATION

Under normal operation, one of each pair of the sludge gas condensate collection tanks is arranged to collect condensate from the sludge gas piping and condensate collectors. The remaining tank is drained and ready to be placed in service.

Each condensate tank is piped with keyed valves as follows to take a tank out of operation:

a. The inlet valve has a normally trapped (sealed in position) key "A" during operation (valve open).

b. Closing the inlet valve releases key "A" locking the valve in the closed position when the key "A" is removed.

c. Transfer of Key "A" to the vent valve (normally closed) permits unlocking of the valve with key "A". The valve can now be opened, thereby trapping key "A", releasing key "B" and locking the vent valve open.

d. Transfer of key "B" to the outlet valve (normally closed) permits unlocking of the valve with key "B". The valve can now be opened, thereby trapping key "B" and locking the outlet valve open.

e. Reversing the above sequence puts the system back into the normal operation mode.

(3) MONITORS

Condensate storage tanks are equipped with a high level float switch alarm that indicates a condensate tank is full and ready to be drained. The annunciator panel on the Digestion Tanks Monitoring Panel (DTMP) contains audible and visual alarms for Condensate Tanks CBA-CTR-1 and 2 and CBB-CT-1 and 2. The annunciator on the Engine Generators Monitoring Panel (EGMP) contains audible and visual alarms for Condensate Tanks RSPS-CT-1 and 2. Condensate levels may be visually determined in the condensate storage tanks by observing the liquid level sight glass mounted on each tank. A pressure gauge is provided on each condensate tank to indicate internal pressure.

M. COMBUSTIBLE GAS DETECTION SYSTEM

(1) DESCRIPTION

The Combustible Gas Detection System is provided to continuously monitor and transmit combustible gas levels with respect to the lower explosion limit (LEL) of such gasses. The system is capable of sensing the presence of combustible gas vapors and actuating audible and visual alarm signals at concentrations between 0 and 100 percent of such gasses. The system is provided with an automatic 12-volt d-c battery powered supply if line power is lost.

The combustible gas detection system consists of six single channel combustible gas sensors and six combustible gas control and indicating units. Two combustible gas sensors (PG-58 and PG-59) are located in the lower level of Control Building A and associated combustible gas control and indicating units (GS-25 and GS-26) are mounted on the Digestion Tanks Monitoring Panel. One combustible gas sensor (PG-57) is located in the upper level of Control Building A and its associated combustible gas control and indicating unit (GS-24) is mounted on the Digestion Tanks Monitoring Panel. One combustible gas sensor (PG-60) is located on the lower level of Control Building B and its associated combustible gas control and indicating unit (GS-28) is mounted on the Digestion Tanks Monitoring Panel. Two combustible gas sensors (PG-70 and PG-71) are located in the Raw Sewage Pumping Station, one at the lower level and one at grade level, and associated combustible gas control and indicating units (GS-58 and GS-59) are mounted on the Engine Generator Monitoring Panel.

(2) NORMAL OPERATION

Under normal operation, each combustible gas sensor operates continuously, monitoring and transmitting combustible gas concentrations to its associated combustible gas control and indicating unit.

In the event that a combustible gas sensor detects a combustible gas level equal to 25 percent LEL, an audible and visual alarm will be initiated on the annunciator panel on the DTMP or EGMP as described above.

N. SUMP PUMPS: CBA-SP-1 AND CBB-SP-1

The Sump Pumping Equipment in Sludge Control Buildings A, B, and C consist of one sump pump in each building, associated drive motors, and associated control panels, cover plates and frames and sump level controls.

For a complete discussion of the sump pumping equipment, operation and control, refer to the section headed "Sump Pumping Equipment."

O. HOISTING EQUIPMENT

The 2-ton capacity manual chain, hand geared type monorail hoist is located in Control Building A.

P. PLANT WATER

The Plant Water Equipment in Control Building A, Control Building B, and Control Building C consists of piping, fittings and hose hydrants.

Plant water is supplied to Control Building A, Control Building B, and Control Building C by the plant water equipment located in the Raw Sewage Pumping Station.

Q. EFFLUENT WATER

The Effluent Water Equipment in the Raw Sewage Pumping Station, Control Building A, Control Building B and Control Building C consists of Booster Pumps designated CBA-BP-1 and CBB-BP-2, piping, fittings, shutoff valves, flow indicators, needle valves, solenoid valves and pressure switches.

Effluent water is supplied to the Raw Sewage Pumping Station, Control Building A, Control Building B, and Control Building C by the general purpose effluent pumps as described in the section headed "Filter Building and Nitrified Effluent Conduit."

The effluent water is used for pump seal and lubrication water and pressure switch purge water.

Booster Pumps CBA-BP-1 and CBB-BP-1 are required to operate whenever associated Digested Sludge Pumps CBA-DSP-1 or 2 or CBB-DSP-1 is operating. Each booster pump is provided with a HAND-OFF-AUTO selector switch. In the AUTO position, each booster pump will automatically start and operate whenever its associated digested sludge pump is started. In the HAND position, each booster pump will operate continuously.

R. VENTILATION

(1) DESCRIPTION

The Ventilation System includes eight roof exhaust fans designated CBA-E-1 through 4, EF-3 through 5, and EF-16.

(2) NORMAL OPERATION

Under normal operation the exhaust fans in the Control Buildings operate continuously.

(3) START-UP AND SHUTDOWN PROCEDURES

To start up and shutdown the ventilation system, use the following procedures:

a. START-UP

- Close the circuit breaker on LP-CBA-62
- Place manual toggle type starter switch near the fan to the ON position.

b. SHUTDOWN

- Place manual toggle type starter switch at the fan in the OFF position

(4) MONITORS

Each roof exhaust fan is equipped with a red running light located near the fan.

S. POWER DISTRIBUTION

(1) DESCRIPTION

The Power Distribution System is shown in detail on the Contract Plans and various shop drawings. Refer to Table III-PR-ADTS-1 Anaerobic Digestion Tanks (Primary Wastewater Treatment Facility) - Facility Equipment Summary, for Contract Plan and shop drawing numbers which pertain to the power distribution system.

III-PR-JC3 JUNCTION CHAMBER NO. 3 (007)

A. GENERAL

Junction Chamber No. 3 receives sewage flow from Meter Vault No. 2 through a 90-inch conduit (see Figure III-PR-JC3-1). A 72-inch by 72-inch conduit from the old Screen and Grit Building also connects to Junction Chamber No. 3 but this is for emergency use only. Scum can be pumped to Junction Chamber No. 3 from a sump in Meter Vault No. 1 through a 6-inch pipe. Waste secondary sludge may also be pumped to Junction Chamber No. 3. (See Figure III-PR-JC3-1 and Figure III-ST-STB-1). An 8-inch pipe from a sump in the Main Pumping Station which carries scum and a 14-inch pipe which carries overflow from the Sludge Thickening Tanks have been rerouted through Junction Chamber No. 3 to Primary Sedimentation Tanks 1 and 2 . At one time, chemicals (alum and polymer) could also be discharged to Junction Chamber No. 3 but the equipment to do this is no longer available. Effluent from Junction Chamber No. 3 flows to the Primary Sedimentation Tanks No. 1 - 4 through a 72-inch by 72-inch underground conduit.

Junction Chamber No. 3 contains the following equipment and system:

- Mixing Equipment
- Power Distribution System

Refer to Table III-PR-JC3-1, Junction Chamber No. 3 - Facility Equipment Summary for control numbers, manufacturers, equipment capacities, and operation, maintenance, contract plan, and shop drawing references. Refer to the Division 4H7 Contractors O & M Manual for Manufacturer's Service Manuals pertaining to the Mixing Equipment.

B. MIXING EQUIPMENT: JC3-RM-1 AND 2

(1) DESCRIPTION

The mixing equipment is provided to thoroughly mix any scum into the sewage flowing through Junction Chamber No. 3.

The mixing equipment consists of two Radial Flow Mixers, designated JC3-RM-1 and 2. The equipment is operated and controlled manually from the combination starter/circuit breaker cabinet located on Junction Chamber No. 3.

(2) NORMAL OPERATION

Under normal operation, when scum is being added to the sewage flow through Junction Chamber No. 3, one or both mixers may be operated.

(3) START-UP AND SHUTDOWN PROCEDURES

To start up or shut down the chemical mixing equipment, use the following procedures:

a. START-UP

- Close the circuit breaker on the combination starter/circuit breaker cabinets located on Junction Chamber No. 3
- Depress the START push button for each chemical mixer

b. SHUTDOWN

- Depress the STOP push button for the chemical mixer to be shut down

NOTE

If maintenance is to be performed on the unit, open the circuit breaker in the combination starter/circuit breaker cabinet. Follow approved **Lockout/Tagout** procedures.

(4) MONITORS

Each mixer is provided with an operational indicating light on its associated combination starter/circuit breaker cabinet.

C. POWER DISTRIBUTION SYSTEM

The power distribution system is shown in detail on the contract plans and various shop drawings. Refer to Table III-PR-JC3-1, Junction Chamber No. 3 - Facility Equipment Summary for contract plan and shop drawing numbers which pertain to the power distribution system.

III-SG-SGB SCREEN AND GRIT BUILDINGS NO. 1 AND NO. 2

A. GENERAL

Screen and Grit Buildings No. 1 and No. 2 are five level structures containing the following equipment and systems:

- Control Gates (Sluices Gates and Slide Gate)
- Mechanical Sewage Screens
- Screenings Conveyor
- Grit Settling Tanks
- Grit Collecting Equipment
- Grit Pumping Equipment
- Grit Removal Equipment
- Grit and Screenings Handling Equipment
- Channel Aeration System
- Combustible Gas Detection System
- Sump Pumps
- Hoisting Equipment
- Plant Air
- Plant Water
- Effluent Water
- Ventilation Equipment
- Power Distribution System

The Screen and Grit facilities constructed as part of the primary plant under the first bond program are no longer in operation.

Influent sewage flows to Screen and Grit Buildings No. 1 and No. 2 from Junction Chamber and Meter Vault No. 1 by gravity through two 72-inch diameter underground conduits. Effluent sewage flows from Screen and Grit Building No. 1 to Junction Chamber and Meter Vault No. 2 by gravity through a 81 inch by 81 inch underground conduit and from Screen and Grit Building No. 2 to Junction Chamber and Meter Vault No. 2 through a 48 inch by 84 inch underground conduit (refer to figure I-GN-3, Plant Flow Diagram).

Refer to Table III-SG-SG1-1, Screen and Grit Building No. 1 and to Table III-SG-SG2-2 Screen and Grit Building No. 2 - Facility Equipment Summary, for control numbers, manufacturers, equipment capacities and operation, maintenance, contract plan and shop drawing references. Refer to Sections 43,44,45,46 and 47 of the Division 5H1 and to Sections 40,41,42,43, and 46 of the Division 4H4 Contractor's O & M Manuals for Manufacturer's Service Manuals pertaining to screen and grit removal equipment, for Screen and Grit Buildings No. 1 and No. 2, respectively.

Equipment in Screen and Grit Building Nos. 1 and 2 except in the Electrical Room, meets the requirements for Class I, Group D, Division 1, explosion-proof equipment and wiring. All personnel entering the building are cautioned to use explosion-proof electrical equipment, no open lights and observe the "No-Smoking" signs. A combustible Gas Detection System (CGDS) is provided to continuously monitor the atmosphere in Screen and

Grit Buildings No. 1 and No. 2 (except the Electrical Room) for the presence of combustible gas. The CGDS will respond to the presence of combustible gas as described later in this section under the heading "Combustible Gas Detection System".

B. PROCESS CONTROL - SCREENING AND GRIT REMOVAL

(1) DESCRIPTION : (SEE FIGURES III-SG-SG1-1 FOR SCREEN AND GRIT BUILDING NO. 1 AND III-SG-SG2-2 FOR SCREEN AND GRIT BUILDING NO. 2)

Removal of screenings and abrasive grit is necessary to prevent clogging, excessive wear and other detrimental effects to the long life and normal operation of the equipment and processes located downstream in the treatment plant. These screenings and grit are removed mainly by three mechanical sewage screens and four grit settling tanks in Screen and Grit Building No. 1, and by two mechanical sewage screens and four grit settling tanks in Screen and Grit Building No. 2, with associated grit collecting, pumping, separating and washing equipment. Dumpsters located in the Screenings and Grit Loading Room of each building receive and hold screenings removed from the process. An electrical fork lift truck transfers the screenings from the dumpsters to a truck for transport to a sanitary landfill. Grit removal from the process is discharged from the cyclone grit separators, through two grit bins with discharge chutes, directly into dump trucks, to be transported to a sanitary landfill.

(2) PROCESS CONTROL

a. SCREENING

Each sewage screen is designed for a normal daily flow of 24 mgd and is capable of screening a maximum sewage flow rate of 55 mgd. For the most effective use of the sewage screens, the velocity through the screen should be limited to about 5 fps. Higher velocities at flow rates above 55 mgd may cause some screenings to pass through the bars. When the flow rate is expected to exceed 55 mgd it is recommended that a minimum of two screens be operated. The third screen in Screen and Grit Building No. 1 is provided as a standby unit. The sewage screens are cleaned periodically by mechanical rakes which are activated by automatic controls. A conveyor is provided to convey screenings from the sewage screens to a hopper.

b. GRIT SETTLING TANKS

Each grit settling tank is designed for a nominal flow rate of 27.6 mgd with settling capacity to remove at least 95 per cent of all material in the sewage with a specific gravity of 2.65 or greater and coarser than 150 mesh. Each grit settling tank is capable of maintaining the above grit removal efficiency at flow rates up to 30 mgd (see Figure III-SG-SG1/SG2-5).

If the flow rate is too high for the number of grit tanks in service, some grit will be kept in suspension and carried over the effluent weir. This may be prevented by increasing the number of tanks in service, as the flow rate increases above 27.6 mgd to maintain at least 70 square feet of grit tank surface area per mgd (see Figure III-SG-SG1/SG2-5). If the flow rate is too low for the number of grit settling tanks in service, an objectionable amount of additional organic solids may settle out along with the grit.

The flow to each grit settling tank should be maintained within the range of about 15 to 30 mgd to minimize carry-over and organic solids settling effects.

The associated grit collector mechanism must be in operation when a tank is in service to prevent grit accumulations on the tank bottom which in turn may overload the collector mechanism.

c. GRIT PUMPING

A grit pump must operate continuously whenever a grit tank is in service. Grit must not be allowed to accumulate in the sumps of the grit settling tanks because the following problems may occur: (1) the concentration of solids may exceed the maximum allowable of 1.0 percent to the cyclone separator; or (2) if allowed to accumulate for a long time, the grit will be compacted into a near solid state which will plug the sump and grit pumps suction piping.

Because of diurnal variations in sewage flow rates to the treatment plant, it will be necessary to place at least one additional grit settling tank in service as the flow increases and to take the tank out of service as the flow decreases. The flow to each grit settling tank should be maintained within the range of about 15 to 30 mgd. When a tank is taken out of service, the grit collector mechanism, associated grit pump and grit removal equipment is to continue operating until the tank is sufficiently dewatered to avoid solids build-up on the tank floor and in the grit sump. If the grit tank will be out of service for maintenance or for more than a day it should be completely dewatered. The dewatering pumping rate is approximately 200 gpm, and the procedure for dewatering a tank requires approximately 8 hours.

WARNING

If a grit settling tank is placed in service and the associated grit collector mechanism and grit pump are not operated continuously, solids will accumulate on the tank floor, in the grit sump and grit pump suction piping. If the solids accumulate on the tank floor to the extent that the grit collector mechanism will not start because of a torque overload or the sump and grit pump suction piping become clogged, the grit settling tank must be shut down, dewatered and cleaned. Refer to the subsection headed "Grit Settling Tanks" for shutdown procedure. After the tank has been shut down, a portable self-priming pump must be used to pump the sewage to the effluent channel. Next, the solids which have accumulated on the tank floor must be manually removed from the tank and sump and the grit pump suction piping (and possibly the grit pump) must be disassembled and cleaned, before the grit settling tank can be returned to service.

d. CYCLONE SEPARATORS

The grit slurry pumped from the grit settling tanks enters the cyclone separators tangentially and develops a cyclonic vortex pattern. Centrifugal forces throw the heavy grit participles to the walls of the separator. The grit then travels down the walls and out through the apex with a minimum of liquid (see Figure III-SG-SG1/SG2-9). Each cyclone separator is capable of separating 95 percent of the material with a specific gravity of 2.65 or greater and coarser than 150 mesh. The lighter grit-free liquid moves to the inner spiral of the vortex where it is displaced into the vortex finder and out of the cyclone separator. A minimum pressure of 13.8 feet of water is required at the inlet to the cyclone separator to create and maintain a vortex flow pattern. When starting up a cyclone separator, lower inlet pressures will not allow the vortex to form. A drop in pressure during operation will cause the vortex to break down, and all of the flow will discharge through the apex.

If the concentration of solids in the grit entering the cyclone separator exceeds 1.0 percent, the cyclone separator will not be capable of removing all solids and may become clogged. To prevent this, grit must be pumped on a continuous basis when a grit tank is in service.

e. GRIT WASHERS

Grit is discharged from the cyclone separators into the grit washers. The grit washers are of the reciprocating rake type which convey the grit up an inclined tank and impart a rolling action which releases entrained organics. The liquid level in the grit washer extends only part way up the inclined tank. Spray nozzles at the upper end of the tank further wash organics from the grit. Each grit washer is provided with two organics return boxes with adjustable plates to regulate organics return flow. An adjustable weir plate at the deep end of the grit washer regulates the liquid level. The overflow from the grit washers with the organics is returned to the sewage screens influent channel by gravity.

Washed grit is deposited into dump trucks located in the Screenings and Grit Loading Room. A reversible conveyor moves the grit discharged from the center grit washer to either of the two grit bins and discharge chutes (see Figures III-SG-SG1-1 and III-SG-SG2-2).

f. SCREENINGS DUMPSTERS AND FORK LIFT TRUCK

Six screenings dumpsters are provided in each Screenings and Grit Loading Room for Screen and Grit Buildings No. 1 and No. 2. Five dumpsters, three in Screen and Grit Building No. 1 and two in Screen and Grit Building No. 2 are to be in place to receive screenings from the screenings conveyor (see Figures III-SG-SG1-1 and III-SG-SG2-2 for Screen and Grit Buildings No. 1 and No. 2 respectively). The seven additional dumpsters, three in Screen and Grit Building No. 1 and four in Screen and Grit Building No. 2, are provided as standby units.

The electrical fork lift truck is provided to transfer the screening material from the dumpsters to a truck. The truck will transport the screenings to a sanitary landfill for ultimate disposal.

(3) REPORTING

The operator for each area is responsible for obtaining and logging information into the plant computer logging system and on forms as required. A List of the required information to be logged is obtained by pressing the "HELP" key on the computer at the process monitoring control panel in the Main Pumping Station. Data is entered into the computer by pressing the "ENTER" key.

C. CONTROL GATES FOR SCREEN AND GRIT BUILDING NO. 1. SLUICE GATES: SG1-SG-9, 10, 11, 12, 13, 14, 15, 16 AND 17 AND SLIDE GATE: SG1-SLG-2

(1) DESCRIPTION

Sluice gates and a slide gate in Screen and Grit Building No. 1 are provided to control sewage flow into and through Screen and Grit Building No. 1 (see Figure III-SG-SG1-1). Table III-SG-SG1-3 indicates the Contract Plan designation number, size, type operator and function of the sluice and slide gates. Stop log grooves are generally provided to permit isolation of each sluice gate for maintenance (see Figure III-SG-SG1-1).

(2) NORMAL OPERATION

a. SLUICE GATES SG1-SG-9,10,11,12 AND 13 AND SLIDE GATE SG1-SLG-2

Sluice Gates SG1-SG-9, 10 and 11 are located in Screen Channels No. 3, No. 4 and No. 5, upstream of Sewage Screens SG1-SS-3, 4 and 5, respectively, and control sewage flow from Junction Chamber and Meter Vault No. 1 to the respective sewage screens. Sluice Gate SG1-SG-12 is located in the influent channel to the grit tanks and serves to isolate Screen Channel No. 3 and Grit Tanks Influent Channels No. 5 and No. 6 from Screen Channels No. 4 and No. 5 and Grit Tank Influent Channels No. 7 and No. 8 (in closed position). Sluice gate SG1-SG-13 is located in the influent channel to the grit tanks and serves to isolate Screen Channel No. 5 and Grit Tanks Influent Channels No. 7 and No. 8 from Screen Channels No. 3 and No. 4 and Grit Tanks Influent Channels No. 5 and No. 6 (in closed position). When both Sluice Gates SG1-SG-12 and 13 are closed, Screen Channel No. 4 is isolated from Screen Channels No. 3 and No. 5 and all Grit Tank Influent Channels. Sewage Screen SG1-SS-4 should then be shut down. Slide Gate SG1-SLG-2 is located in the effluent channel and permits the north half of the effluent channel to be removed from service and dewatered as described later. Sluice Gates SG1-9,10,11,12 and 13 and Slide Gate SG1-SLG-2 are intended to be completely open or completely closed, depending upon the sewage flow pattern to the grit settling tanks (see Figure III-SG--SG1-1). The sluice gates and slide gate are motor-operated and are provided with OPEN-CLOSE-STOP push buttons at each unit for local operation. The motor operators are equipped with self-contained push button controls and duplicate push button controls mounted at a convenient operating height adjacent to each gate.

Each STOP push button is provided with a locking device if maintenance is to be performed. Both the LOCAL and REMOTE push buttons are operable at all times except when the locking device on the STOP push button at either location is engaged.

b. SLUICE GATES SG1-SG-14, 15, 16 and 17

Sluice Gates SG1-SG-14,15,16 and 17 are located in Grit Tanks Influent Channel Nos. 5, 6,8 and 7, respectively, and control sewage flow from the screen channels to the grit tanks. Sluice Gates SG1-SG-14,15,16 and 17 are intended to be completely open or completely closed, are motor-operated and are provided with OPEN-CLOSE-STOP operating push buttons as described above for Sluice Gates SG1-SG-9,10,11,12 and 13 and Slide Gate SG1-SLG-2. In addition to the OPEN-CLOSE-STOP push buttons, Sluice Gates SG1-SG-14 and 15 are provided with OPEN-CLOSE push buttons on Grit Removal System Control Panels 5, 6 (GRSCP-5, 6) as are Sluice Gates SG1-SG-16 and 17 on GRSCP-7, 8.

(3) START-UP AND SHUTDOWN PROCEDURES

The following procedures apply only to sluice or slide gates with motor operators.

a. START-UP

- Close circuit breakers in Motor Control Center MCC-28
- Push the OPEN or CLOSE button

NOTE

Limit switches are provided to de-energize the motor operator when the gate arrives at the completely OPEN or CLOSED position.

b. SHUTDOWN

- Push the STOP button

NOTE

If maintenance is to be performed on the unit, open the circuit breaker on MCC-28 and engage the locking device on the STOP button. Follow approved **Lockout/Tagout** procedures (See Chapter VI, Safety).

(4) ALTERNATE OPERATION

c. MANUAL OPERATION

Each motor operator is provided with a handwheel for manual operation as follows:

- Depress motor operator declutching lever.
- Turn handwheel counterclockwise to open or clockwise to close gate

NOTE

Energizing the motor operator automatically disengages the declutching lever and returns gate to motor operation.

(5) MONITORS

Torque switches are provided to de-energize the motor operator if the gate movement becomes obstructed. Refer to the Division 5H1 Contractor's O & M Manual for manufacturer's literature that describes the setting and operation of the torque switches.

Each sluice gate is provided with a gate position indicator on its motor operator. In addition, position indicating lights are provided for Sluice Gates SG3-SG-14, 15, 16, and 17 on Grit Removal System Control Panels, GRSCP 5, 6, and 7, 8.

D. CONTROL GATES FOR SCREEN AND GRIT BUILDING NO. 2, SLUICE GATES: SG2-SG-1, 2, 3, 4, 5, 6, 7 AND 8 AND SLIDE GATES: SG2-SLG-1

(1) DESCRIPTION

Sluice gates and a slide gate are provided to control sewage flow into and through Screen and Grit Building No. 2 (see Figure III-SG-SG2-2). Table III-SG-SG2-4 indicates the Contract Plan designation number, size, type operator and function of the sluice and slide gates.

Stop log grooves are generally provided to permit isolation of each sluice gate for maintenance (see Figure III-SG-SG2-2).

(2) NORMAL OPERATION

a. SLUICE GATES SG2-SG-5, 6, AND 7 AND SLIDE GATE SG2-SLG-1

Sluice Gates SG2-SG-5 and 6 are located in Screen Channels Nos. 1 and 2, upstream of Sewage Screens SG2-SS-1 and 2, respectively, and control sewage flow from Junction Chamber and Meter Vault No. 1 to the respective sewage screens. Sluice Gate SG2-SG-7 is located in the influent channel to the grit tanks and serves to isolate Screen Channel No. 1 and Grit Tanks Influent Channels No. 1 and No. 2 from Screen Channel No. 2 and Grit Tanks Influent Channels No. 3 and No. 4. Slide Gate SG2-SLG-1 is located in the effluent channel and permits the north half of the effluent channel to be removed from service and dewatered as described later. Sluice Gates SG2-SG-5, 6, and 7 and Slide Gate SG2-SLG-1 are intended to be completely open or completely closed, depending upon the sewage flow pattern to the grit settling tanks (see Figure III-SG-SG2-2). The sluice gates and slide gate are motor-operated and are provided with OPEN-CLOSE-STOP push buttons at each unit for local operation. The motor operators are equipped with self contained push button controls and duplicate push button controls are mounted at a convenient operating height adjacent to each gate.

Each STOP push button is provided with a locking device if maintenance is to be performed. Both the LOCAL and REMOTE push buttons are operable at all times except when the locking device on the STOP push button at either location is engaged.

b. SLUICE GATES SG2-SG-1, 2, 3 AND 4

Sluice Gates SG2-SG-1, 2, 3 and 4 are located in Grit Tanks Influent Channel Nos. 1, 2, 3 and 4, respectively, and control sewage flow from the screen channels to the grit tanks. Sluice Gates SG2-SG-1, 2, 3 and 4 are intended to be completely open or completely closed, are motor-operated

and are provided with OPEN-CLOSE-STOP operating push buttons as described above for Sluice Gates SG2-SG-5, 6 and 7 and Slide Gate SG2-SLG-1. In addition to the OPEN-CLOSE-STOP push buttons, Sluice Gates SG2-SG-1 and 2 are provided with OPEN-CLOSE push buttons on Grit Removal System Control Panels 1, 2 (GRSCP-1, 2) as are Sluice Gates SG2-SG-3 and 4 on GRSCP-3, 4.

c. SLUICE GATE SG2-SG-8

Sluice Gate SG2-SG-8, is located in the effluent channel and controls flow to the dewatering sump. The sluice gate is manually operated by means of a handwheel. Turning the handwheel in the counterclockwise direction opens the gate.

(3) START-UP AND SHUTDOWN PROCEDURES

The following procedures apply only to sluice or slide gates with motor operators.

a. START-UP

- Close circuit breakers in Motor Control Center MCC-21
- Push the OPEN or CLOSE button

NOTE

Limit switches are provided to de-energize the motor operator when the gate arrives at the completely OPEN or CLOSED position.

b. SHUTDOWN

- Push the STOP button

NOTE

If maintenance is to be performed on the unit, open the circuit breaker on MCC-21 and engage the locking device on the STOP button. Follow approved **Lockout/Tagout** procedures (See Chapter VI, Safety).

(4) ALTERNATE OPERATION

a. MANUAL OPERATION

Each motor operator is provided with a handwheel for manual operation as follows:

- Depress motor operator declutching lever.
- Turn handwheel counterclockwise to open or clockwise to close gate.

NOTE

Energizing the motor operator automatically disengages the declutching lever and returns gate to motor operation.

(5) MONITORS

Torque switches are provided to de-energize the motor operator if the gate movement becomes obstructed. Refer to Section 22 of the Division 4H4 Contractor's O & M Manual for manufacturer's literature that describes the setting and operation of the torque switches.

Each sluice gate is provided with a gate position indicator on its motor operator. In addition, position indicating lights are provided for Sluice Gates SG2-SG-1, 2, 3, and 4 on Grit Removal System Control Panels, GRSCP 1,2, and 3,4

E. MECHANICAL SEWAGE SCREENS: SCREEN AND GRIT BUILDING NO. 1: SG1-SS-3, 4 AND 5. SCREEN AND GRIT BUILDING NO. 2: SG2-SS-1 AND 2.

(1) DESCRIPTION

The mechanical sewage screens are provided to remove rags, paper products, plastic products and other large debris from the sewage.

The mechanical sewage screens consist of three mechanically cleaned bar screen assemblies, designated SG1-SS-3, 4 and 5, for Screen and Grit Building No. 1, and of two mechanically cleaned bar screen assemblies, designated SG2-SS-1 and 2 for Screen and Grit Building No. 2. The equipment is operated and controlled either manually or automatically by means of timers, bubbler type differential liquid level systems, various switches and other instrumentation as described below.

The sewage screens are of the front-cleaned, inclined, bar rack type with 3/8-inch clear spacing between the bars for Screen and Grit Building No. 1 and 3/4-inch clear spacing between the bars, for Screen & Grit Building No. 2. Each screen is capable of removing 15.6 cubic feet of screenings per hour while operating continuously at a rake speed of 30 fpm for Screen and Grit Building No. 1 and 10 fpm for Screen and Grit Building No. 2. Each sewage screen is capable of screening a maximum flow of 55 mgd.

(2) NORMAL OPERATION

Under normal operation, when all sewage screen cleaning mechanisms are operable, and the sewage flow rate exceeds 55 mgd, it is recommended that two screens be used in each Screen and Grit Building. In Screen and Grit Building No. 1, one additional screen is provided as a stand-by unit.

When a sewage screen is in use, the sluice gate upstream of that screen is required to be in the OPEN position.

An ON-OFF switch with a locking device for the OFF position and a TEST push button are provided at each sewage screen unit.

FOR SCREEN AND GRIT BUILDING NO. 1

HAND-OFF-AUTO selector switches for both the rake carriage and wiper motors for each sewage screen are located in each Sewage Screen Control Panel located in the Electrical Room. When the selector switch for the carriage motor is in the HAND position the rake arm may be operated in either a forward

or reverse motion by the control switch located adjacent to the sewage screen. When the selector switch for the wiper motor is the HAND position the wiper arm may be operated in either direction by the control switch adjacent to the sewage screen. When the selector switch is in the AUTO position, operation of each sewage screen cleaning mechanism is controlled by the timer located in the sewage screen control panel and bubbler type liquid level controls located in the bubbler control panel. An initial setting of one hour is recommended for the adjustable timer. This initial setting may be adjusted up or down as dictated by operating experience. After the timer has been set and the selector switch has been set to AUTO position, the sewage screen cleaning mechanism will operate as follows:

- The timer will periodically operate the sewage screen cleaning mechanism at the set interval (for example: once each hour) for a predetermined, adjustable period of time (0 to 5 minutes). After this time period has elapsed, the sewage screen cleaning mechanism will continue to operate until the rake has traveled out the sewage flow and the wiper cleans the rake. Then a limit switch de-energizes the unit.

- If the sewage screen becomes clogged before the timer is scheduled to operate the cleaning mechanism again, the bubbler type liquid level system will operate the cleaning mechanism when the difference in the liquid level of the upstream and downstream sides of the sewage screen exceeds 6 inches, as determined by the bubbler type differential liquid level system. When the liquid level differential drops below 5 inches, the mechanism will continue to operate for an adjustable period of time (0 to 5 minutes). After this time period has elapsed, the sewage screen cleaning mechanism will continue to operate until the rake has traveled out the sewage flow and the wiper cleans the rake. Then a limit switch de-energizes the unit.

FOR SCREEN AND GRIT BUILDING NO. 2

A HAND-OFF-AUTO selector switch for each sewage screen is located on Motor Control Center MCC-21. When the selector switch is in the HAND position, the sewage screen cleaning mechanism will operate continuously. When the selector switch is in the AUTO position, operation of the sewage screen cleaning mechanism is controlled by the timer and bubbler type liquid level controls located in the Sewage Screens Control Panel 0G-1 as described below.

A second HAND-OFF-AUTO selector switch for each sewage screen is located on Sewage Screens Control Panel OG-1. When the selector switch is in the HAND position, the sewage screen cleaning mechanism will operate continuously. When the selector switch is in the AUTO position, operation of the sewage screen cleaning mechanism is controlled by a bubbler type differential liquid level system located in the screen channel and by an adjustable timer (15-minute minimum interval and 24-hour maximum interval) located in the Sewage Screens Control Panel OG-1. An initial time interval of one hour is recommended for the adjustable timer. This initial setting may be adjusted up or down as dictated by operating experience. After the timer has been set and both selector switches have been placed in the AUTO position, the sewage screen cleaning mechanism will operate as follows:

- The timer will periodically operate the sewage screen cleaning mechanism at the set interval (for example: once each hour) for a predetermined, adjustable period of time (0 to 5 minutes). After

this time period has elapsed, the sewage screen cleaning mechanism will continue to operate until the rakes have traveled out of the sewage flow and trip a limit switch which de-energizes the unit.

- If the sewage screen becomes clogged before the timer is scheduled to operate the cleaning mechanism again, the bubbler type liquid level system will operate the cleaning mechanism when the difference in the liquid level of the upstream and downstream sides of the sewage screens exceeds 6 inches, as determined by the bubbler type differential liquid level system. When the liquid level differential drops below 5 inches, the mechanism will continue to operate for an adjustable period of time (0 to 5 minutes) and then be de-energized by the limit switch as described above.

(3) START-UP AND SHUTDOWN PROCEDURES

To start up or shut down a mechanical sewage screen use the following procedures:

a. START-UP

- Check that the plant air system is operating and open plant air supply line valves to the bubbler type differential liquid level systems located in the screen channels.

- For Screen and Grit Building No. 1 open the associated upstream Sluice Gate (SG1-SG-9,10 or 11) and at least one associated grit tanks influent channel Sluice Gate (SG1-SG-14,15,16 or 17). Sluice Gates (SG1-SG-12 and 13) must be set to permit flow as discussed in Section C-1. For Screen and Grit Building No. 2, open the associated upstream Sluice Gate (SG2-SG-5 or 6) and at least one associated grit tanks influent channel Sluice Gate (SG2-SG-1,2,3, or 4). Sluice Gate SG2-SG-7 must be set to permit flow as discussed in Section C-2.

- Close the circuit breaker for the sewage screen drive at Motor-Control Center MCC-28 for Screen and Grit Building No. 1 and at Motor Control Center MCC-21, for Screen and Grit Building No. 2.

- Place the ON-OFF switch with locking device located at the sewage screen in the ON position.

- Set the HAND-OFF-AUTO selector switches for the sewage screen drive on the Sewage Screens Control Panel to the Auto position, for Screen and Grit Building No. 1. Set the HAND-OFF-AUTO selector switches for the Sewage Screen drive on MCC-21 and on the Sewage Screens Control Panel 0G-1 to the AUTO position for Screen and Grit Building No. 2.

- Set the adjustable timer to operate the cleaning mechanism at desired time interval on the Sewage Screens Control Panel for Screen and Grit Building No. 1 and on Sewage Screens Control Panel OG-1, for Screen and Grit Building No. 2.

b. SHUTDOWN

- Close the associated upstream Sluice Gate SG1-SG-9, 10 or 11, for Screen and Grit Building No. 1 and SG2-SG-5 or 6 for Screen and Grit Building No. 2.

- Set the HAND-OFF-AUTO selector switch for the sewage screen drive to the OFF position.

NOTE

If maintenance is to be performed on the equipment, open the circuit breaker on MCC-28 for Screen and Grit Building No. 1 and on MCC-21 for Screen and Grit Building No. 2 and place the ON-OFF switch located at the sewage screen in the OFF position and engage locking device. Follow approved **Lockout/Tagout** procedures (See Chapter VI, Safety).

(4) ALTERNATE OPERATION

The sewage screens may be operated manually as follows:

- For Screen and Grit Building No. 1 move the HAND-OFF-AUTO selector switches, located at each Sewage Screen Control Panel to HAND for both the carriage rake motor and the wiper motor. The rake and/or wiper can then be operated in either forward or reverse by operation of the selector switch located adjacent to the sewage screen. The rake and wiper may be stopped by returning the selector switch to OFF.

- For Screen and Grit Building No. 2, place the unit mounted ON-OFF switch in the ON position and move the HAND-OFF-AUTO selector switch, located on MCC-21, to the HAND position to start the unit and to the OFF position to stop the unit.

(5) MONITORS AND ALARMS

The wall mounted annunciator panel for Screen and Grit Building No. 1 and the annunciator panel at Motor Control Center MCC-21 for Screen and Grit Building No. 2, contain indicator lights and alarms for each sewage screen for the following:

- High upstream water level (set for Elevation 14.9)
- Low downstream water level (set for Elevation 12.0)
- High differential water level (set for 9-inch differential)
- Sewage Screen failure (Screen and Grit building No. 1 only)

The Remote Transmission Units located in the Electrical Rooms of Screen and Grit Building Nos. 1 and 2 continuously scan and transmit the condition of all alarm points in each Building to the Computer Logger in the Process Control Room in the Main Pumping Station. Individual alarms are displayed by the Computer Logger.

Each sewage screen is provided with a red running indicating light and an elapsed time meter on its Motor Control Center.

Each sewage screen is provided with contacts for status indication (ON or OFF) that the Remote Transmission Unit receives and transmits each sewage screen status to the Computer Logger in the Process Control Center in the Main Pumping Station.

F. SCREENINGS CONVEYOR: SCREEN AND GRIT BUILDING NO. 1: SG1-SC-2 SCREEN AND GRIT BUILDING NO. 2: SG2-SC-1

(1) DESCRIPTION

The Screenings Conveyors, designated SG1-SC-2 and SG2-SC-1 for Screen and Grit Buildings No. 1 and No. 2 respectively, are provided to convey screenings from the mechanical sewage screens to the screenings dumpsters located in the Screenings and Grit Loading Room of each building. Each screenings conveyor consists of a flat belt type conveyor with a capacity of 33.6 cubic feet for SG1-SG-2 and 15 cubic feet for SG2-SC-1 of screenings per hour, a manually operated cross plow and operating controls.

(2) NORMAL OPERATION

Each screenings conveyor is provided with START-STOP push buttons at each end of the conveyor. Each STOP push button is provided with a locking device if maintenance is to be performed. Each screenings conveyor may be operated continuously or intermittently, as required, to discharge screenings to one of two screenings dumpsters. When one screenings dumpster is filled, change the position of the manually operated cross plow to discharge screenings to the second screenings dumpster. Screen and Grit Building No. 1 has an additional screenings dumpster and manually operated cross plow.

(3) START-UP AND SHUTDOWN PROCEDURES

To start up and shut down each screenings conveyor, use the following procedures:

a. START-UP

- Close the circuit breakers for the screenings conveyor at Motor Control Center MCC-28 for Screen and Grit Building No. 1 and at Motor Control Center MCC-21 for Screen and Grit Building No. 2.

- Push the START button at either end of the conveyor.

b. SHUTDOWN

- Push the STOP button at either end of the conveyor

NOTE

If screenings conveyor is to be out of service for a prolonged period of time, screenings must be manually transferred from the conveyor to a small portable container (for example: a trash

can) for removal from the screen area. Open the circuit breaker on MCC-28 for Screen and Grit Building No. 1 or the circuit breaker on MCC-21 for Screen and Grit Building No. 2 and engage locking device on STOP button if maintenance is to be performed on the equipment. Follow approved **Lockout/Tagout** procedures (See Chapter VI, Safety).

(4) MONITORS AND ALARMS

The Motor Control Center for Screen and Grit Building No. 1 is MCC-28. The Motor Control Center for Screen and Grit Building No. 2 is MCC-21. Each screenings conveyor is provided with a red running indication light and an elapsed time meter on its Motor Control Center.

The wall mounted annunciator panel for Screen and Grit Building No. 1 and the annunciator panel at Motor Control Center MCC-21 for Screen and Grit Building No. 2 contain indicating lights and alarms for motor overload for the screenings conveyors.

The Remote Transmission Units in Screen and Grit Buildings No. 1 and No. 2 continuously scan and transmit tbe condition of all alarm points in each building to the Computer Logger in the Process Control Room in the Main Pumping Station. Individual alarms are displayed by the Computer Logger.

G. GRIT SETTLING TANKS

(1) DESCRIPTION

Screen and Grit Buildings Nos. 1 and 2 are both provided with four grit settling tanks to remove grit from the sewage, which can cause damage to pumps and other treatment plant equipment.

Each of the four grit settling tanks located in Screen and Grit Buildings No. 1 or No. 2 are 45 feet in diameter and have a nominal water depth of 6 feet.

Flow is distributed across the entire width of each grit settling tank by flow deflectors as described under the subsection headed "Grit Collecting Equipment." Flow from the grit settling tanks into the effluent channel is controlled by a fixed weir.

Each grit settling tank is designed for a nominal flow rate of 25 mgd with a hydraulic capacity to remove at least 95 percent of all material in the sewage with a specific gravity of 2.65 or greater and coarser than 150 mesh. Each grit settling tank is capable of maintaining the above grit removal efficiency at flow rates up to 30 mgd (see Figure III-SG-SG2-7).

(2) START-UP, SHUTDOWN AND DEWATERING

To start up, shut down and dewater a grit settling tank in Screen and Grit Buildings No. 1 and No. 2 use the following procedures:

a. START-UP

- Select the grit settling tank to be put into operation (see Figures III-SG-SG1-1 and III-SG-SG2-2).

- Open Sluice Gates SG1-SG-12,13 and/or SG2-SG-7 if required depending on which Sewage Screen is in operation (See Section C-1 and C-2)

- Crack open associated influent channel Sluice Gate SG1-SG-14,15,16 or 17 for Screen and Grit Building No. 1 and SG2-SG-1,2,3 or 4 Screen and Grit Building No. 2

- Call Process Control to determine that the flow reading of Total Plant Influent (MRC-1, MRC-2, and MRC-4 total) has not changed significantly. The tank must be filled slowly as to not upset the down stream processes.

NOTE

If Grit Settling Tank No. 5 and/or No. 6 are in operation, open Slide Gate No. SG1-SLG-2. If Grit Setting Tank No. 1 and/or No. 2 are in operation, open Slide Gate No. SG2-SLG-1.

The grit settling tanks effluent channel is provided with an air diffuser system. Be sure that process air is being supplied to the system when the effluent channel is in use (see Figures III-SG-SG1-1 and III-SG-SG2-2).

- Check the inlet valve to the selected grit pump to make sure it is open. Example: GR2-007 (pump "A") or GR2-008 (pump "B").

- Open the selected grit pump discharge line manifold block valve. The control panel for this valve is located in the pump bay between the two tanks.

NOTE

If the equipment is available, run each grit tank pump discharge to a separate grit washer. Example: If a tank is the third tank in service, and all three grit washers are operable, the grit and pump discharges can be sent to separate grit washers. If the tank is the fourth tank in service or if there is grit separation equipment unavailable, the grit pump discharges will have to be manifolded together. To do this, all the

manifold valves will have to be opened. Under normal flow rates there will only be two or three tanks in each building in service at one time. Example: Open manifold valve GR2-027 and see that manifold valve GR2-038 is closed. This will isolate No.1 grit tank pump discharge to No.1 grit washer.

- Start up the following associated equipment as described elsewhere in this section: grit collecting equipment, grit pumping equipment and grit removal equipment.

b. SHUTDOWN FOR DIURNAL FLOWS

- Close associated influent channel Sluice Gate SG1-SG-14,15,16, or 17 for Screen and Grit Building No. 1 and SG2-SG-1,2,3 and 4 for Screen and Grit Building No. 2.

- Allow the following associated equipment to operate until all grit is removed from the tank; the grit collecting equipment, the grit pumping equipment and grit removal equipment.

c. DEWATERING FOR MAINTENANCE OR WHEN OUT OF SERVICE FOR EXTENDED PERIOD

- Close associated Influent channel Sluice Gate SG1-SG-14,15,16 or 17 for Screen and Grit Building No. 1 and SG2-SG-1,2,3 and 4 for Screen and Grit Building No. 2.

- Allow the following associated equipment to continue to operate: the grit collecting equipment, the grit pumping equipment and the grit removal equipment.

- As the liquid level drops in the tank, wash down tank and influent channel walls using the plant water hose connections provided.

- When the tank is empty, continue washing down tank and equipment located therein and operate grit pump and grit collector as required until the tank is completely cleaned and empty.

H. GRIT COLLECTING EQUIPMENT: SCREEN AND GRIT BUILDING NO. 1: SG1-GC-5, 6, 7 AND 8 SCREEN AND GRIT BUILDING No. 2: SG2-GC-1, 2, 3 AND 4

(1) DESCRIPTION

The grit collecting equipment is provided to rake grit which has settled out of the sewage in the grit settling tanks to the grit sump.

The grit collecting equipment consists of the four Grit Collecting Mechanisms, designated SG1-GC-5,6,7 and 8, located in Grit Settling Tanks Nos. 5,6,7 and 8, respectively, for Screen and Grit Building No. 1

and four Grit Collecting Mechanisms, designated SG2-GC-1,2,3 and 4, located in Grit Settling Tanks Nos. 1,2,3 and 4, respectively, for Screen and Grit Building No. 2, associated flow deflectors and controls.

The flow deflectors, located in the grit settling tanks influent channels, are manually adjustable to uniformly distribute the sewage flow across the entire width of the grit settling tanks.

Each grit collecting mechanism consists of the drive unit, maintenance platform, bridge structure, drive column and rake arms with plow blades and scoops. Grit Collectors in Screen and Grit Building No. 1 have four rake arms and Grit Collectors in Screen and Grit Building No. 2 have two rake arms. Each grit collecting mechanism rotates at approximately 0.14 revolutions per minute and is designed to rake all material removed in the grit settling tank to the grit sump.

(2) NORMAL OPERATION

Each grit collecting mechanism is provided with an ON-OFF switch, with locking device for the OFF position at each drive unit and manual START-STOP push buttons on its associated Grit Removal System Control Panel, GRSCP 5,6 or 7,8 for Screen and Grit Building No. 1 and GRSCP 1, 2 or 3,4 for Screen and Grit Building No. 2 and operational indicating lights on both GRSCP's for each Screen and Grit Building.

When a grit settling tank is in use, sewage enters the tank through the influent channel and passes by the flow deflectors, which, when properly adjusted will distribute the flow uniformly over the entire width of the tank. As the sewage flows through the tank, grit settles out and the flow then continues over the effluent weir and into the effluent channel.

The grit which has settled out of the sewage is raked by the grit collecting mechanism to a grit sump (see Figure III-SG-SG1-1 for Screen and Grit Building No. 1 and III-SG-SG2-2 for Screen and Grit Building No. 2). The grit is removed from the grit sump by means of the grit pumps as described under the subsection headed "Grit Pumping Equipment."

(3) START-UP AND SHUTDOWN PROCEDURES

To start up and shut down the grit collecting equipment, use the following procedures:

a. START-UP

- Close the circuit breaker for the selected grit collecting mechanism at Motor Control Center MCC-28 for Screen and Grit Building No. 1 and at Motor Control Center MCC-21 for Screen and Grit Building No. 2, and place the ON-OFF switch at the unit in the ON position.

- Push the START button on the associated Grit Removal System Control Panel (GRSCP).

b. SHUTDOWN

- Push the STOP button on the associated GRSCP

NOTE

If maintenance is to be performed on the equipment, open the circuit breaker on MCC-28 for Screen and Grit Building No. 1 and on MCC-21 for Screen and Grit Building No. 2, and place the ON-OFF switch at the unit in the OFF position and engage the locking device. Follow approved **Lockout/Tagout** procedures (See Chapter VI, Safety).

(4) MONITORS AND ALARMS

Each grit collector drive is protected by a two stage torque limit switch overload device. If the starting or operating torque exceeds a preset value, the first stage of the overload device will close an alarm contact, and if the starting or operating torque continues to rise and exceeds a second, higher, preset value, the overload device will de-energize the grit collector drive. The wall mounted annunciator panel for Screen and Grit Building No. 1 and the annunciator panel at Motor Control Center MCC-21 for Screen and Grit Building No. 2, contain indicating lights and alarms for the two stage torque limit switch device for each grit collector drive.

The Remote Transmission Units located in the Electrical Rooms of Screen and Grit Buildings No. 1 and No. 2 continuously scan and transmit the condition of all alarm points in each building to the Computer Logger in the Process Control Room in the Main Pumping Station. Individual alarms are displayed by the Computer Logger.

Each grit collector mechanism is provided with operational indicating lights on it's building GRSCP's, and with a red running indicating light and elapsed time meter on Motor Control Center MCC-28 and Motor Control Center MCC-21 for Screen and Grit Buildings No. 1 and No. 2 respectively.

Each grit collector mechanism is provided with contacts for status indication (ON-OFF), that the Remote Transmission Units in Screen and Grit Buildings No. 1 and No. 2, receive and transmit the respective grit collector mechanism status to the Computer Logger in the Process Control Center in the Main Pumping Station.

I. GRIT PUMPING EQUIPMENT: SCREEN AND GRIT BUILDING NO. 1: SG1-GP-5A, 5B, 6A, 6B, 7A, 7B, 8A AND 8B; SCREEN AND GRIT BUILDING ;NO. 2: SG2-GP-1A, 1B, 2A, 2B, 3A, 3B, 4A AND 4B

(1) DESCRIPTION

The grit pumping equipment is provided to pump grit which is collected in the grit settling tanks sump to the cyclone grit separator equipment.

The Grit Pumping Equipment consists of grit pumps and associated drive units, designated SG1-GP-5A, 5B, 6A, 6B, 7A, 7B, 8A, AND 8B for Screen and Grit Building No. 1 and grit pumps and associated drive

units, designated SG2-GP-1A, 1B, 2A, 2B, 3A, 3B, 4A and 4B for Screen and Grit Building No. 2. Each of the four grit settling tanks in each Screen and Grit Building is served by two grit pumps (see Figure III-SG-SG1-1 for Screen and Grit Building No. 1 and Figure III-SG-SG2-2 for Screen and Grit Building No. 2)

Each grit pump is a single-stage, horizontal, nonclogging, end suction, vertical discharge, centrifugal, vortex-type solids handling pump. Each pump is driven by a side mounted, horizontal, single-speed motor through a V-belt drive.

Each pump has a rated capacity of 200 gpm at a rated head of 55 feet when the pump speed is approximately 1,282 rpm and 1,000 rpm respectively for Screen and Grit Building No. 1 and No. 2 (see Figures III-SG1-6 and SG2-7).

(2) NORMAL OPERATION

Only one of the two grit pumps serving each grit settling tank is required to remove the grit collected in the grit settling tank sump. The second pump is provided as a standby unit.

Each grit pump is provided with an ON-OFF switch with a locking device for the OFF position and a TEST push button at each unit and manual START-STOP push buttons on its associated Grit Removal System Control Panel, GRSCP-5, 6 or 7, 8. Operational indicating lights are provided on both GRSCP's in each Building for Screen and Grit Building No. 1 and GRSCP-1, 2 or 3, 4 for Screen and Grit Building No. 2.

Each pump is provided with a pressure switch and a pneumatically operated plug check valve located in the discharge line. The plug valve opens automatically when the pump discharge pressure exceeds the preset pressure switch value (for detailed description of the operation of pneumatically operated plug check valves, see the section headed "Valves").

(3) START-UP AND SHUTDOWN PROCEDURES

To start up and shut down the grit pumping equipment, use the following procedures:

a. START-UP

- Check that the plant air system is operating and open the valve required to supply air to the pneumatically operated pump discharge plug check valve

- Check that the effluent water system is operating and open the valves required to supply seal water to the pump and purge water to the pump discharge pressure switch diaphragm seal

- Open the associated manually operated suction valve

- Open the associated manually operated isolating valve in the discharge pipeline

- Close the circuit breaker for the grit pump at Motor Control Center MCC-21 for Screen and Grit Building No. 2 or at Motor Control Center MCC-28 for Screen and Grit Building No. 3.

- Place the ON-OFF switch at the unit in the ON position

Proceed to the associated Grit Removal System Control Panel (GRSCP 5, 6 or 7, 8 in Screen and Grit Building No. 1 or GRSCP 1, 2 or 3, 4 in Screen and Grit Building No. 2) and:

- Check that the associated grit settling tank influent sluice gate is in the OPEN position (SG1-14, 15, 16 or 17 in Screen and Grit Building No. 1 or SG2-SG-1, 2, 3 or 4 in Screen and Grit Building No. 2).

- Check that the associated grit collector mechanism is operating (SG1-GC-5, 6, 7 or 8 in Screen and Grit Building No. 1 or SG2-GC-1, 2, 3 or 4 in Screen and Grit Building No. 2).

- Check status indicating lights to make sure the proper manually operated suction and isolating valves are OPEN.

- Check that valves for associated grit removal equipment are correctly positioned.

- Start up associated grit removal equipment as described in the subsection headed "Grit Removal Equipment".

- Push START button on the GRSCP for the selected grit pump.

b. SHUTDOWN

- Push the STOP button on the GRSCP

NOTES

If maintenance is to be performed on the grit pump, and the grit settling tank is to remain in service, open the circuit breaker on MCC-28 for Screen and Grit Building No. 1 or MCC-21 for Screen and Grit Building No. 2 and move the ON-OFF switch at the pump unit to the OFF position and engage the locking device, close the associated manually operated suction valve and start up the standby grit pump. Follow approved **Lockout/Tagout** procedures (See Chapter VI, Safety).

If the grit settling tank is to be dewatered and taken out of service, refer to the subsection headed "Grit Settling Tanks" for procedure.

- Shut down associated grit removal equipment as described in the subsection headed "Grit Removal Equipment" only if such equipment is NOT simultaneously serving another grit pump which remains operating.

(4) MONITORS AND ALARMS

Each Grit Removal System Control Panel (GRSCP-5, 6 and 7, 8 for Screen and Grit Building No. 1 and GRSCP-1, 2 and 3, 4 for Screen and Grit Building No. 2) is provided with ON-OFF status indicating lights for each grit pump in that building.

The wall mounted annunciator panel for Screen and Grit Building No. 1 and the annunciator panel at Motor Control Center MCC-21 for Screen and Grit Building No. 2, contain indicating lights and alarms for motor overload for each grit pump.

The Remote Transmission Units in Screen and Grit Buildings No. 1 and No. 2 continuously scan and transmit the condition of all alarms points in each building to the Computer Logger in the Process Control Room in the Main Pumping Station. Individual alarms are displayed by the computer Logger.

Each grit pump is provided with a red running indication light and an elapsed time meter on Motor Control Center MCC-28 for Screen and Grit Building No. 1 and MCC-21 for Screen and Grit Building No. 2.

Each grit pump is provided with contacts for status indication (ON or OFF), that the Remote Transmission Units in Screen and Grit Buildings No. 1 and No. 2 receive, transmitting the pump status to the Computer Logger in the Process Control Center in the Main Pumping Station.

Each grit pump is provided with a suction and discharge gauge calibrated in feet of water.

J. GRIT REMOVAL EQUIPMENT: SCREEN AND GRIT BUILDING NO. 1: SG1-GW-4, 5 AND 6 AND SG1-GCV-2; SCREEN AND GRIT BUILDING NO. 2: SG2-GW-1, 2 AND 3 AND SG2-GCV-1

(1) DESCRIPTION

The grit removal equipment is provided to separate, wash, and dewater the grit which is pumped from the grit settling tanks.

The grit removal equipment consists of three grit separation and washing systems for Screen and Grit Building No. 1, designated SG1-GW-4,5 and 6 and of three grit separation and washing systems for Screen and Grit Building No. 2, designated SG2-GW-1, 2 and 3. Each Building includes three grit separation and washing systems made up of the following:

- Six cyclone grit separators (SG1-GS-7,8,9,10,11, and 12 for Screen and Grit Building No. 1 and SG2-GS-1,2,3,4,5 and 6 for Screen and Grit Building No. 2).
- Three rake type dewatering grit washers (SG1-GW-4,5 and 6 for Screen and Grit Building No. 1 and SG2-GW-1,2, and 3 for Screen and Grit Building No. 2)
- One reversible Grit Conveyor (SG1-GCV-2 for Screen and Grit Building No. 1 or SG2-GCV-1 for Screen and Grit Building No. 2)
- Two grit bins with pneumatically operated valves, discharge chutes and instrumentation in each Screen and Grit Building.

The cyclone grit separators are of the hydrocyclone type with a maximum capacity of 260 gpm per separator. Two cyclone grit separators are associated with each grit separation and washing system. Each separator is capable of separating 95 percent of the material with a specific gravity of 2.65 or greater and coarser than 150 mesh.

The dewatering grit washers are of the reciprocating rake type which wash, classify and dewater grit from the cyclone separators by moving the grit up the sloping bottom and depositing the grit into its associated grit bin (Grit Separation and Washing Systems SG1-GW-4 and 6) or onto Grit Conveyor SG1-GCV-2 (Grit Separation and Washing Systems SG1-GW-5) for Screen and Grit Building No. 1 or into its associated grit bin (Grit Separation and Washing System SG2-GW-1 and 3) or onto Grit Conveyor SG2-GCV-1 (Grit Separation and Washing Systems SG2-GW-2) for Screen and Grit Building No. 2, which then discharges the grit into either of the two grit bins in each building.

Grit Conveyor SG1-GCV-2 of Screen and Grit Building No. 1 and Grit Conveyor SG2-GCV-1 of Screen and Grit Building No. 2 are of the horizontal, flat belt, reversing direction type and have sufficient capacity to convey the maximum discharge from one grit washer to either of the two grit bins, in each building.

The grit conveyor in Screen and Grit Building No. 1 is driven by a side mounted, horizontal, single speed motor through a chain drive that will produce a conveyor belt speed of 50 fpm. The grit conveyor in Screen and Grit Building No. 2 is driven by a side mounted, horizontal, single speed motor through a mechanical V-belt sheave arrangement used in conjunction with an adjustable motor base that will produce a conveyor belt speed range of 30 to 50 fpm.

NOTE

The belt conveyor speed CANNOT BE ADJUSTED while the conveyor is in operation.

(2) NORMAL OPERATION

For each grit pump in operation, one cyclone grit separator must be in service. The cyclone grit separators operate by means of hydrostatic pressure provided by the grit pumps. Each cyclone grit separator removes

the heavy grit solids from the grit pump discharge and deposits the solids into its associated grit washer. The lighter grit free sewage and biological solids are returned to the sewage screens influent channel (see Figure III-SG-SG1/SG2-9).

The influent riser to each cyclone grit separator is provided with a pneumatically operated plug valve. Manual OPEN-CLOSE push buttons and position indicating lights are provided on both Grit Removal System Control Panels, GRSCP-5,6 and 7,8 for Screen and Grit Building No. 1 and GRSCP-1,2 and 3,4 for Screen and Grit Building No. 2. The influent riser to each cyclone grit separator is also provided with a pressure gauge calibrated in feet of water.

Each grit washer is provided with an ON-OFF switch with a locking device for the OFF position and a TEST push button at each unit as well as manual START-STOP push buttons and operational indicating lights on both Grit Removal System Control Panels, GRSCP-5, 6 and 7, 8 for Screen and Grit Building No. 1 and GRSCP-1, 2 and 3, 4 for Screen and Grit Building No. 2. When a START button is depressed the grit washer will operate continuously.

NOTE

Grit Washer SG1-GW-5 will not operate unless Grit Conveyor SG1-GCV-2 is operating in Screen and Grit Building No. 1. Grit Washer SG2-GW-2 will not operate unless Grit Conveyor SG2-GCV-1 is operating in Screen and Grit Building No. 2.

The grit conveyor is provided with LEFT START-STOP-RIGHT START push buttons at the unit for local operation and duplicate push buttons for the unit are provided on both GRSCP-5, 6 and 7, 8 for Screen and Grit Building No. 1 and GRSCP-1, 2 and 3, 4 for Screen and Grit Building No. 2. The local STOP push button is provided with a locking device. When a LEFT START or RIGHT START button is depressed the grit conveyor will operate continuously.

The bottom of each of the two grit bins is provided with a pneumatically operated knife gate valve, designated Grit Bin Gate GBG-3 and 4 for Screen and Grit Building No. 1 and GBG-1 and 2 for Screen and Grit Building No. 2. Each grit bin gate is provided with manual OPEN -CLOSE push buttons and position indicating lights on the Grit Bin Gates Control Panel (GBGCP) located in the Screenings and Grit Loading Room of each building. Duplicate push buttons and indicating lights are provided on each GRSCP in the building associated with that grit bin gate. When a grit disposal truck is in position below the grit bin discharge chute, the grit bin gate should be in the OPEN position. When a grit disposal truck becomes full and is removed for disposal, the grit bin gate should be in the CLOSE position.

(3) START-UP AND SHUTDOWN PROCEDURES

To start up and shut down the grit removal equipment, use the following procedures:

a. START-UP

- Check that the plant air system is operating and open the valves required to supply air to the pneumatically operated plug and knife gate valves.

- Check that the effluent water system is operating and open the valves required to supply water to the grit washer.

- Close the circuit breakers in Motor Control Center MCC-28 for Screen and Grit Building No. 1 and MCC-21 for Screen and Grit Building No. 2 and for the selected grit washer and the grit conveyor.

- Place the ON-OFF switch at the selected grit washer in the ON position.

Proceed to either Grit Removal System Control Panel (GRSCP-5, 6 or 7, 8 for Screen and Grit Building No. 1 or GRSCP-1, 2 or 3, 4 for Screen and Grit Building No. 2) and:

- Push the OPEN button for the pneumatically operated plug valve on the influent riser of the cyclone grit separator selected.

- Push the START button for the associated grit washer

NOTE

If Grit Washer SG1-GW-5 in Screen and Grit Building No. 1 is selected, START Grit Conveyor SG1-GCV-2 before attempting to START the grit washer. If Grit Washer SG2-GW-2 in Screen and Grit Building No. 2 is selected, START Grit Conveyor SG2-GCV-1 before attempting to START the grit washer.

b. SHUTDOWN

- Shut down associated grit pumps as described under the subsection headed "Grit Pumping Equipment"

- CLOSE the pneumatically operated plug valve on the influent riser of the associated cyclone grit separator or separators

NOTE

Allow associated grit washer to continue to operate until all grit has been washed and discharged into the associated grit bin.

- Push the STOP button for the associated grit washer

NOTE

If maintenance is to be performed on the grit washer, open the circuit breaker on MCC-28 for Screen and Grit Building No. 1 or MCC-21 for Screen and Grit Building No. 2 and move the ON-OFF switch at the unit to the OFF position and engage the locking device. Follow approved **Lockout/Tagout** procedures (See Chapter VI, Safety).

- Push the STOP button for the grit conveyor

NOTE

If maintenance is to be performed on the grit conveyor, open the circuit breaker on MCC-28 for Screen and Grit Building No. 1 or MCC-21 for Screen and Grit Building No. 2 and push the STOP button at the unit and engage the locking device. Follow approved **Lockout/Tagout** procedures (See Chapter VI, Safety).

(4) MONITORS AND ALARMS

Each Grit Removal System Control Panel (GRSCP-5, 6 and 7, 8 for Screen and Grit Building No. 1 and GRSCP-1,2 and 3,4 for Screen and Grit Building No. 2) is provided with ON-OFF status indicating lights for each grit washer and the grit conveyor. The influent riser to each cyclone grit separator is provided with a pressure gauge calibrated in feet of water.

Each grit washer drive unit is provided with a shear pin device to prevent overloading of the rake mechanism. Refer to the Division 5H1 Contractor O & M Manual for Screen and Grit Building No. 1 and to the Division 4H4 Contractor's O & M Manual for Screen and Grit Building No. 2, for manufacturer's literature pertaining to shear pin replacement procedures. The wall mounted annunciator panel for Screen and Grit Building No. 1 and the annunciator panel at Motor Control Center MCC-21 for Screen and Grit Building No. 2 contain indicating lights and alarms for shear pin failure for each grit washer.

The wall mounted annunciator panel for Screen and Grit Building No. 1 and the annunciator panel at MCC-21 for Screen and Grit Building No. 2 contain indicating lights and alarms for motor overload for the grit conveyor.

The Remote Transmission Units located in the Electrical Rooms of Screen and Grit Buildings No. 1 and No. 2 continuously scan and transmit the condition of all alarm points in each Building to the Computer

Logger in the Process Control Room in the Main Pumping Station. Individual alarms are displayed by the Computer Logger.

Each grit washer and the grit conveyor is provided with red running indicating lights on MCC-28 in Screen and Grit Building No. 1 and on MCC-21 in Screen and Grit Building No. 2. Each grit washer is provided with an elapsed time meter on MCC-28 in Screen and Grit Building No. 1 and on MCC-21 in Screen and Grit Building No. 2.

K. SCREENINGS HANDLING EQUIPMENT

(1) DESCRIPTION

The screenings handling equipment is provided to facilitate removal of the collected screenings from Screen and Grit Buildings No. 1 and No. 2. The screenings handling equipment consists of an electric forklift truck with battery charger and six screenings dumpsters at each building.

The forklift truck has a rated capacity of 8,000 pounds at 24-inch load center, to the maximum fork height of 125 inches. The truck is powered by a 36-volt lead-acid battery.

A battery charger is provided for recharging the forklift truck battery and is located in the Operations and Maintenance Building (040). The charger is capable of completely recharging the truck battery within eight hours.

The screenings dumpsters are of the combination stand type designed for use with forklift trucks and have a capacity of 4 cubic yards of material.

(2) NORMAL OPERATION

Six screenings dumpsters are located in each Screenings and Grit Loading Room and serve as follows:

- Three dumpsters are to be positioned to receive screenings from the screenings conveyor in screen and Grit Building No. 1 and two dumpsters are to be positioned to receive screenings from the Screenings Conveyor in Screen and Grit Building No. 2

- Three dumpsters are provided for Screen and Grit Building No. 1 and four dumpsters are provided for Screen and Grit Building No. 2, as stand-by units, if full dumpsters cannot be emptied immediately

The forklift truck is used to lift and relocate the dumpsters to another part of the building for subsequent unloading by the Sanitation Department. When not in use, the truck is plugged into the battery charger in the Operations and Maintenance Building (040).

L. AIR DIFFUSER SYSTEM

The Air Diffuser System in Screen and Grit Building No. 1 and in Screen and Grit Building No. 2, consist of a flowmeter, designated FE-99 and MPA-2 respectively for each building, eight air diffuser assemblies located in

each effluent channel, and associated butterfly valves (see Figures III-SG-SG1-1 and III-SG-SG2-2 for Screen and Grit Buildings No. 1 and No. 2 respectively).

For a complete discussion of the air diffuser system equipment, operation and control, refer to the section headed "Process Air Equipment and Systems."

M. COMBUSTIBLE GAS DETECTION SYSTEM FOR SCREEN AND GRIT BUILDING NO. 1

(1) DESCRIPTION

Screen and Grit Building No. 1 is provided with a combustible gas detection system which is arranged to transmit continuous indication of combustible gas levels related to the lower explosion limit (LEL) of such gasses. Combustible gases that may be found in Screen and Grit Building No. 1 include gasoline vapor and methane. In addition, the combustible gas detection system monitors for the toxic gases, carbon monoxide and hydrogen sulfide.

The Combustible Gas Detection System Equipment for Screen and Grit Building No. 1 consist of a free Standing Combustible Gas Monitoring Panel SG1-GMP-1 with multi-channel gas monitor control modules and is located in the Transformer Yard. The Combustible Gas Monitoring Panel analyzes samples drawn from sample ports located as follows:

- Grit Pumping Station No. 3 at Elevation 4'-7".
- Grit Pumping Station No. 4 at Elevation 4'-7".
- Grit Tanks Room (Column F14) at Elevation 17'-6".
- Three sample ports in Screening and Grit Loadings Room at Elevation 17'-0".
- Two sample ports in Screen Area at Elevations 17'-0" and 18'-6".

Three combustible gas alarm horns and a strobe light are located as follows:

- A Lo (560 hertz) - Hi (766 hertz) tone alarm horn for 25% and 50% LEL signal respectively, along with strobe light located in Grit Tanks Room.

- A yelp tone alarm horn and strobe light for hydrogen sulfide gas signal located in Grit Tanks Room.

- A 470 hertz alarm horn for carbon monoxide signal located in Screenings and Grit Loading Room.

(2) NORMAL OPERATION

The Combustible Gas Monitoring Panel continuously monitors the atmosphere in Screen and Grit Building No. 1 for the presence of combustible gases, carbon monoxide and hydrogen sulfide. When a combustible gas level is equal to 25 percent LEL, the combustible gas horns and strobe light are activated, Supply Fans SG1-S-10 and 11 operate at high speed, Exhaust Fans SG1-E1 and 2 operate in "NO BYPASS" mode and Roof Exhaust Fans SG1-REF-16 through SG-REF-23 all operate. This equipment continues to operate through and adjustable timer for a period of ten minutes after the combustible gas level reduces below 25 percent LEL. If the combustible gas level increases to 50 percent LEL, the following equipment will automatically shut down: all sewage screen drives, the screenings conveyor, all

grit collectors, all grit pumps, all grit washers and the grit conveyor. All sump pumping equipment will remain operable. Refer to Chapter IX - Emergencies for procedure to be followed upon occurrence of combustible gas alarm. Each alarm point, 25 percent LEL and 50 percent LEL and an instrument failure signal for each combustible gas sensor is relayed to the Remote Transmission Unit and the Annunciator located in the Electrical Room. The Remote Transmission Unit continuously scans and transmits the condition of all alarm points in Screen and Grit Building No. 1 to the Computer Logger in the Process Control Room in the Main Pumping Station. Individual alarms are displayed by the Computer Logger.

N. COMBUSTIBLE GAS DETECTION SYSTEM FOR SCREEN AND GRIT BUILDING NO. 2

(1) DESCRIPTION

Screen and Grit Building No. 2 is provided with a combustible gas detection system which is arranged to transmit continuous indication of combustible gas levels related to the lower explosion limit (LEL) of such gases. The combustible gases that may be found in Screen and Grit Building No. 2 include gasoline vapor and methane.

The Combustible Gas Detection System Equipment for Screen and Grit Building No. 2 consists of five combustible gas sensors, designated OG-9, OG-10, OG-11, OG-12 and OG-13, the Combustible Gas System Cabinet located in the Electrical Room, indicators and controls and an alarm horn and alarm light.

The combustible gas sensors in Screen and Grit Building No. 2 are located as follows:

GAS SENSOR	LOCATION
OG - 9	Sewage Screen Influent Channel No. 1
OG - 10	Sewage Screen Influent Channel No. 2
OG - 11	Grit Tanks Room on Column E10
OG - 12	Grit Pumping Station No. 1
OG - 13	Grit Pumping Station No. 2

Each combustible gas sensor is provided with a control and indicating unit mounted in the Combustible Gas System Cabinet. Each control and indicating unit is provided with the following items:

- A white pilot light for power indication
- An ON-OFF switch
- A red pilot light for trouble indication
- A blue pilot light for trouble indication
- Documentary contact switch for alarm reset and horn silence
- A meter indicator with 0 to 100 percent LEL combustible gas range, all face mounted.

The alarm horn and alarm light are mounted on Column 11F in Screen and Grit Building No. 2.

(2) NORMAL OPERATION

Each combustible gas sensor continuously monitors the atmosphere in Screen and Grit Building No. 2 for the presence of combustible gases. When a combustible gas sensor detects a combustible gas level equal

to 25 percent LEL, the following will occur: Roof Exhaust Fans, SG2-REF-1 through 15 and Supply Fans SG2-S-1 and 2 will start up at high speed, or will automatically shift to high speed if they are operating at low speed when the 25 percent LEL occurs; the alarm horn will sound and the alarm light will flash. If the combustible gas level increases to 50 percent LEL, the following equipment will automatically shut down: all sewage screen drives, the screenings conveyor, all grit collectors, all grit pumps, all grit washers and the grit conveyor. All sump pumping equipment will remain operable. Refer to Chapter IX - Emergencies for procedure to be followed upon occurrence of combustible gas alarm. Each alarm point, 25 percent LEL and 50 percent LEL and an instrument failure signal for each combustible gas sensor is relayed to the Remote Transmission Unit located in the Electrical Room. The Remote Transmission Unit continuously scans and transmits the condition of all alarm points in Screen and Grit Building No. 2 to the Computer Logger in the Process Control Room in the Main Pumping Station. Individual alarms are displayed by the Computer Logger.

O. SUMP PUMPS: SCREEN AND GRIT BUILDING NO. 1: SG1-SP-4, 5 AND 6 (SEE FIGURE III-SG-SG1-1). SCREEN AND GRIT BUILDING NO. 2: SG2-SP-1, 2 AND 3 (SEE FIGURE III-SG-SG2-2).

The Sump Pumping Equipment in Screen and Grit Buildings No. 1 and No. 2 consists of three sump pumps and associated drive motors in each building, designated SG1-SP-4,5 and 6 in Screen and Grit Building No. 1 and SG2-SP-1, 2 and 3 in Screen and Grit Building No. 2 and associated control panels, cover plates and frames and sump level controls.

The sump pumping equipment is located in Screen and Grit Building No. 1 as follows:

- Sump Pump SG1-SP-4, at the west end of Grit Pumping Station No. 3
- Sump Pump SG1-SP-5, at the west end of Grit Pumping Station No. 4
- Sump Pump SG1-SP-6, near column line 18D in the Screenings and Grit Loading area.

NOTE

Sump Pump SG1-SP-6 also recycles truck washdown water from the driveway area east of the Screenings and Grit Loading Area.

The sump pumping equipment is located in Screen and Grit Building No. 2 as follows:

- Sump Pump SG2-SP-1, at the east end of Grit Pumping Station No. 1
- Sump Pump SG2-SP-2, at the east end of Grit Pumping Station No. 2
- Sump Pump SG2-SP-3, near column line 13G in the Screenings and Grit Loading Area.

For a complete discussion of the sump pumping equipment, operation and control, refer to the section headed "Sump Pumping Equipment."

P. HOISTING EQUIPMENT FOR SCREEN AND GRIT BUILDING NO. 1: SG1-MH-2 AND SG1-CH-3 AND 4

The Hoisting Equipment in Screen and Grit Building No. 1 consists of one 3-ton capacity electric motor operated monorail hoist, designated SG1-MH-2, and two 2-ton capacity manual chain, hand geared type monorail hoists, designated SG1-CH-3 and 4.

The hoisting equipment is located in Screen and Grit Building No. 1 as follows:

- Monorail Hoist, SG1-MH-2 above the Sewage Screens and Grit Removal Equipment in the Screenings and Grit Loading Room.
- Chain Hoist SG1-CH-3, above Grit Pumping Station No. 3
- Chain Hoist SG1-CH-4, above Grit Pumping Station No. 4

For a complete discussion of the hoisting equipment, operation and control, refer to the section headed "Hoisting Equipment."

Q. HOISTING EQUIPMENT FOR SCREEN AND GRIT BUILDING NO. 2: SG2-MH-1 AND SG2-CH-1 AND 2

The Hoisting Equipment in Screen and Grit Building No. 2 consists of one 3-ton capacity electric motor operated monorail hoist, designated SG2-MH-1, and two 2-ton capacity manual chain, hand geared type monorail hoists, designated SG2-CH-1 and 2.

The hoisting equipment is located in Screen and Grit Building No. 2 as follows:

- Monorail Hoist, SG2-MH-1, above the Sewage Screens and Grit Removal Equipment in the Screenings and Grit Loading Room
- Chain Hoist SG2-CH-1, above Grit Pumping Station No. 1
- Chain Hoist SG2-Ch-2, above Grit Pumping Station No. 2

For a complete discussion of the hoisting equipment operation and control refer to the seetion headed "Hoisting Equipment".

R. PLANT AIR (SEE FIGURE III-SU-UPS-1 THROUGH 3)

The plant air equipment in Screen and Grit Buildings No. 1 and No. 2 consists of piping and fittings, shutoff valves, hose connections, in-line filters, pressure regulating valves, pressure gauges, various solenoid valves, air line lubricators and moisture traps.

Compressed air is supplied to the plant air equipment by the Plant Air System as described in the section headed " Oxygen Biological System."

Tbe plant air equipment supplies compressed air to the bubbler type liquid level system, to the pneumatically operated valves and to hose conneetions.

S. **PLANT WATER** (SEE FIGURE III-SU-UPS-4)

The plant water equipment in Screen and Grit Buildings No. 1 and No. 2 consists of piping and fittings and hose hydrants.

Plant water is supplied to Screen and Grit Buildings No. 1 and No. 2 by the Plant Water Equipment as described in the section headed " Oxygen Biological System." Plant water is used for hosing down the floors, settling tanks and equipment.

T. **EFFLUENT WATER** (SEE FIGURE III-SU-UPS-5 THROUGH 9)

The effluent water equipment in Screen and Grit Buildings No. 1 and No. 2 consists of piping and fittings, shutoff valves, flow indicators and needle valves, solenoid valves and pressure switches.

Effluent water is supplied to Screen and Grit Buildings No. 1 and No. 2 by the General Purpose Effluent Water Pumps as described in the section headed "Filtration"

Effluent water is used for pump seal and lubrication water, pressure switch purge water and wash water for the grit washers.

U. **VENTILATION FOR SCREEN AND GRIT BUILDING NO. I: SG1-S-3, 4, 5, 6, 7, 8, 9, 10, 11, 12, 13, 14 AND 15 AND SG1-E1 AND 2 AND SG1-REF-16, 17, 18, 19, 20, 21, 22, 23 AND 24.**

(1) DESCRIPTION

The purpose of the Screen and Grit Building No. 1 ventilation system is to provide 100 percent outside air to the Electrical Room, the Grit Pumping Stations, the Grit Tank Room, the Screen Area and Screenings and Grit Loading Room.

The ventilation system consists of Supply Fans SG1-S-4, 5, 6, 7, 8, 9, 10, 11, 12, 13, 14 and 15, with associated ductwork, Roof Exhaust Fans SG1-REF-16, 17, 18, 19, 20, 21, 22, 23 and 24, Supply Fan SG1-S-3 with thermostat control, Exhaust Fans SG1-E1 and 2, and inlet and exhaust louvers with manual dampers.

Supply Fans SG1-S-4, 5, 6, 7, 8 and 9 are centrifugal fans, driven by single speed, 3 horsepower motors. Supply Fans SG1-S-4, 5, 6, 7, 8 and 9 supply 6000 cubic feet per minute of outside air to the Grit Tanks Room.

Supply Fans SG1-S-10 and 11 are centrifugal fans, driven by two speed, 2 horsepower motors. Supply fans SG1-S-10 and 11 each supply 3600 cubic feet per minute of outside air to Grit Pumping Stations Nos. 3 and 4, respectively, at high speed and 1800 cubic feet per minute at low speed.

Supply Fans SG1-S-12, 13, 14, and 15 are centrifugal fans driven by single speed, 2 horsepower motors. Supply Fans SG1-S-12, 13, 14, and 15 supply 4000 Cubic feet per minute of outside air to the Grit Tanks Room.

Supply Fan SG1-S-3 is a centrifugal fan, driven by a single speed, 5 horsepower motor. Supply Fan SG1-S-3 supplies 9600 cubic feet per minute of outside air to the electrical room.

Exhaust Fans SG1-E-1 and 2 are in-line centrifugal fans driven by single speed, 75 horsepower motors. Exhaust Fans SG1-E-1 and 2 exhaust air from the Grit Tanks Room through an exhaust stack. Each fan exhausts air at a rate of 59,600 cubic feet per minute.

Roof Exhaust Fans SG1-REF-16, 17, 18, 19, 20, 21, 22 and 23 are centrifugal up-blast fans driven by single speed, 2 horsepower motors. Roof Exhaust Fans SG1-REF-16, 17, 18, 19, 20, 21, 22 and 23 exhaust air from the Screen Area, the Grit Removal Equipment Area and the Mezzanine and draw outside air into these areas through the inlet louvers. Each of the fans exhaust air at a rate of 9250 cubic feet per minute.

Roof Exhaust Fan SG1-REF-24 is a centrifugal up-blast fan driven by a ½ horsepower motor that exhausts 2760 cubic feet per minute of air from the Transformer Yard.

(2) NORMAL OPERATION

Supply Fans SG1-S-4, 5, 6, 7, 8, 9, 12, 13, 14 and 15 are each provided with an ON-OFF switch with a locking device for the OFF position and a test button. Supply Fans SG1-S-4, 5, 6, 7, 8, 9, 12, 13, 14 and 15 are energized by Motor Control Center MCC-29. An ON-Off-AUTO selector switch in Temperature Control Panel SG1-TCP-1 located in the Electrical Room controls the operation of each fan. In the ON position each fan operates continuously. In the AUTO position each fan operates continuously. Flow switches located in each fan sense no flow when the fan should be running in the AUTO position and energize individual alarms in Temperature Control Panel SG1-TCP-1.

Supply Fans SG1-S-10 and 11 are each provided with an ON-OFF switch with a locking device for the OFF position and test buttons for both low speed and high speed at each unit. Supply Fans SG1-S-10 and 11 are energized by Motor Control Center MCC-29. An ON(low) - ON(High) -OFF-AUTO selector switch in Temperature Control Panel SG1-TCP-1 located in the Electrical Room controls the operation of each fan. In the ON(low) position the fan operates continuously at low speed. In the ON(High) position the fan operates continuously at high speed. In the AUTO position each fan operates at low speed. When an alarm signal is transmitted by the combustible gas monitoring panel fans SG1-S-10 and 11 operate at high speed through an adjustable timer for a period of at ten minutes after the alarm condition no longer exists. Flow switches located in each fan sense no flow when the fan should be running in the AUTO position and energize individual alarms at Temperature Control Panel SG1-TCP-1.

Exhaust Fans SG1-E-1 and 2 are each provided with an On-Off switch with a locking device for the OFF position and a test button at each unit. Exhaust Fans SG1-E-1 and 2 are energized by Motor Control Center MCC-29. An ON-OFF-AUTO selector switch in Temperature Control Panel SG1-TCP-1 located in the Electrical Room controls the operation of each fan. In the ON position the fan operates continuously and motor operated butterfly dampers MOD-1B and MOD-2B for fans SG1-E-1 and SG1-E-2, respectively, are open. In the AUTO position each fan operates continuously. A three position selector

switch located in Temperature Control Panel SG1-TCP-1 controls the motor operated dampers MOD-1A and 1C for Exhaust Fan SG1-E-1 and MOD-2A and 2C for Exhaust Fan SG1-E-2 in the following modes:

- E-1 BYPASS - Butterfly Damper MOD-1A is closed and Butterfly Damper MOD-1C is open providing outside bypass air with Exhaust Fan SG1-E-1. Butterfly Damper MOD-2A is open and Butterfly Damper MOD-2C is closed exhausting air form the Grit Tanks Room with Exhaust Fan SG1-E-2. The outside bypass air and Grit Tanks exhaust air are mixed and discharge at a constant velocity through the discharge stack.

- E-2 BYPASS - Butterfly Damper MOD-2A is closed and Butterfly Damper MOD-2C is open providing outside bypass air with Exhaust Fan SG1-E-2. Butterfly Damper MOD-1A is open and Butterfly Damper MOD-1C is closed exhausting air form the Grit Tanks Room with Exhaust Fan SG1-E-1. The outside bypass air and Grit Tanks exhaust air are mixed and discharged at a constant velocity through the discharge stack.

- NO BYPASS-Butterfly Dampers MOD-1A and MOD-2A are open and Butterfly Dampers MOD-1C and MOD-2C are closed exhausting air form the Grit Tanks Room with Exhaust Fans SG1-E-1 and SG1-E-2 at a constant velocity through the discharge stack. Outside Air is supplemented through the manually operated, normally open louvers located on the north wall of the Grit Tanks Room.

Flow Switches located in each fan sense no flow when the fan should be running in the AUTO position and energize individual alarms at Temperature Control Panel SG1-TCP-1.

NOTE

Whenever an alarm signal is transmitted from the combustible gas monitoring panel, an emergency ventilation mode shall exist and Butterfly Dampers MOD-1C and MOD-2C close and Butterfly Dampers MOD-1A and MOD-2A open (NO-BYPASS Mode) and Supply Fans SG1-S-10 and SG1-S-11 operate at high speed through an adjustable timer for a period of ten minutes after the alarm condition no longer exists.

Supply Fan SG1-S-3 is provided with ON-OFF switch with a locking device for the OFF position and a test button at the unit. Supply Fan SG1-S-3 is energized by Motor Control Center MCC-29. An ON-OFF-AUTO selector switch in Temperature Control Panel SG1-TCP-1 located in the Electrical Room controls the operation of Fan SG1-S-3. In the ON position the fan operates continuously. In the AUTO position the fan is controlled by an adjustable room Thermostat. The fan is set to come on above 85°F and off below 83°F. A flow switch located in the fan senses no flow when the fan should be running in the AUTO position and energizes an alarm at Temperature Control Panel SG1-TCP-1.

Roof Exhaust Fans SG1-REF-16, 17, 18, 19, 20, 21, 22 and 23 are each provided with an ON-OFF switch with a locking device for the OFF position and a test button at the unit. Each fan is energized by Motor Control Center MCC-29. An ON-OFF-AUTO selector switch in Temperature Control Panel SG1-TCP-1 located in the Electrical Room controls the operation of each fan. In the ON position each fan operates continuously. In the AUTO position, normally four of the eight fans operate continuously, through a lead-lag switch and a 7 day time clock, exhausting air from the Screen Room, Grit Removal Equipment Area and the Mezzanine. Outside air is provided through the normally open manually operated dampers on the south wall. Flow switches located at each fan sense no flow when the fan should be running in the AUTO position and energize individnal alarms at Temperature Control Panel SG1-TCP-1.

NOTE

When an alarm signal is transmitted from the combustible gas monitoring panel an emergency ventilation mode shall exist and Roof Exhaust Fans SG1-REF-16 through SG1-REF-23 all operate through an adjustable timer for a period of ten minutes after the alarm condition no longer exists.

Roof Exhanst Fan SG1-REF-24 is provided with an ON-OFF switch with a locking device for the OFF position and a text button at the unit. The fan is energized by Motor Control Center MCC-29. An On-OFF-AUTO selector switch in Temperature Control Panel SG1-TCP-1 located in the Electrical Room controls the operation of SG1-REF-24. In the ON position the fan operates continuously. In the AUTO position SG-REF-24 operates when the adjustable thermostat located in the Transformer Yard senses temperature above 85°F and stops when the temperature drops below 83°F. Outside air is provided by louvers located on the north and east walls of the Transformer Yard. A Flow switch located at SG1-REF-24 senses no flow when the fan should be running in the AUTO position and energizes an alarm at Temperature Control Panel SG1-TCP-1.

(3) START-UP AND SHUTDOWN PROCEDURES

To start up or shut down the ventilation equipment use the following procedures:

a. START-UP (ALL FANS)

- Place the ON-OFF switch at the unit in the ON position
- Close the circuit breakers for the supply fan in Motor Control Center MCC-29
- Set the selector switch in the Temperature Control Panel to ON or AUTO depending on mode desired.

b. SHUTDOWN (ALL FANS)

- Set the selector switch in the Temperature Control Panel to OFF.

NOTE

If maintenance is to be performed on a fan, open the circuit breaker on MCC-29 and move the ON-OFF switch at the unit to the OFF position and engage the locking device. Follow approved **Lockout/Tagout** procedures (See Chapter VI, Safety).

(4) MONITORS AND ALARMS

Each fan is provided with OFF-ON indicating lights and an elapsed time meter on Motor Control Center MCC-29.

Each fan is provided with an alarm pilot light in Temperature Control Panel SG1-TCP-1 for "Fan Air Flow" Failure.

The Remote Transmission unit Located in the Electrical Room continuously scans and transmits the condition of all alarms points to the Computer Logger in the Process Control Room in the Main Pumping Station. Individual alarms are displayed by the Computer Logger.

V. VENTILATION FOR SCREEN AND GRIT BUILDING NO. 2: SG2-S-1, 2 AND 3 AND SG2-REF-1, 2, 3, 4, 5, 6, 7, 8, 9, 10, 11, 12, 13, 14 AND 15.

(1) DESCRIPTION

The purpose of the Screen and Grit Building No. 2 ventilation system is to provide 100 percent outside air to the Electrical Room, the Grit Pumping Stations, the Grit Tank Room, the Screen Area and Screenings and Grit Loading Room.

The ventilation system consists of Supply Fans SG2-S-1 and 2 with associated ductwork, Roof Exhaust Fans SG2-REF-1, 2, 3, 4, 5, 6, 7, 8, 9, 10, 11, 12, 13, 14 and 15, Supply Fan SG2-S-3 with thermostat control and inlet and exhaust louvers with manual dampers.

Supply Fans SG2-S-1 and 2 are in-line type centrifugal fans, driven by two speed, 3 horsepower motors. Supply Fans SG2-S-1 and 2, supply 3600 cubic feet per minute of outside air to Grit Pumping Stations Nos. 1 and 2, respectively, at high speed and 1800 cubic feet per minute when operating at low speed.

Supply Fan SG2-S-3, is an in-line type centrifugal fan, driven by a two speed, 5 horsepower motor. Supply Fan SG2-S-3, supplies 9600 cubic feet per minute of outside air to the Electrical Room at high speed and 4800 cubic feet per minute when operating at low speed.
Roof Exhaust Fans SG2-REF-1, 2, 3, 4, 5, 6, 7, 8, 9, 10, 11, 12, 13, 14 and 15 are centrifugal fans driven by 2 speed, 3 horsepower motors.

Roof Exhaust Fans SG2-REF-1, 2, 3, 4, 5 and 6, exhaust air from the Screen Area and the Screenings and Grit Loading Room and draw outside air into these areas through the inlet louvers. Each of the fans

exhaust air at a rate of 8400 cubic feet per minute at high speed and 4200 cubic feet per minute when operating at low speed.

Roof Exhaust Fans SG2-REF-7, 8, 9, 10, 11, 12, 13, 14 and 15, exhaust air from the Grit Tanks Room and Grit Pumping Stations. Outside air is drawn into the Grit Tank Room through the inlet louvers by the roof exhaust fans and is supplied to the Grit Pumping Station by Supply Fans SG2-S-1 and 2. Each of the fans exhaust air at a rate of 9500 cubic feet per minute at high speed and 4750 cubic feet per minute at low speed.

(2) NORMAL OPERATION

Supply Fans SG2-S-1 and 2 are each provided with an ON-OFF switch with a locking device for the OFF position at a convenient operating height on a column below the unit and HIGH SPEED START-LOW SPEED START-STOP push buttons on Motor Control Center MCC-21. Under normal operation, both supply fans are required to operate at low speed.

Supply Fan SG2-S-3 is provided with and ON-OFF switch with a locking device for the OFF position at a convenient operating height below the unit and HIGH SPEED TEST and LOW SPEED START-STOP push buttons on Motor Control Center MCC-21. Under normal operation, the fan will provide six air changes per hour when operated continuously at slow speed. When the temperature in the Electrical Room rises above the thermostat control set point, the fan will operate at fast speed until the temperature drops below the set point.

Roof Exhaust Fans SG2-REF-1, 2, 3, 4, 5, 6, 7, 8, 9, 10, 11, 12, 13, 14 and 15, are each provided with an ON-OFF switch with a locking device for the OFF position at a convenient operating height on a column below the unit and HIGH SPEED START-LOW SPEED START-STOP push buttons on Motor Control Center MCC-21. Under normal operation, all roof exhaust fans operating at low speed will provide six air changes per hour

(3) START-UP AND SHUTDOWN PROCEDURES

To start up or shut down the ventilation equipment use the following procedures:

a. START-UP (ALL FANS)

- Place the ON-OFF switch on the column below the unit in the ON position
- Close the circuit breakers for the supply fan in Motor Control Center MCC-21
- Depress the LOW SPEED START push button on Motor Control Center MCC-21

b. SHUTDOWN (ALL FANS)

- Depress the STOP push button on Motor Control Center MCC-21

NOTE

If maintenance is to be performed on a fan, open the circuit breaker on MCC-21 and move the ON-OFF switch at the unit to the OFF position and engage the

locking device. Follow approved **Lockout/Tagout** procedures (See Chapter VI, Safety).

(4) ALTERNATE OPERATION

a. MANUAL HIGH SPEED OPERATION

Supply Fans SG2-S-1 and 2 and Roof Exhaust Fans SG-REF-1 through 15, may be manually operated at high speed by depressing the HIGH SPEED START push button on MCC-21.

b. AUTOMATIC HIGH SPEED OPERATION.

Supply Fans SG2-S-1 and 2 and Roof Exhaust Fans SG-REF-1 through 15 will automatically operate at high speed upon detection of a combustible gas level in excess of 25 percent LEL, as described in the subsection headed "Combustible Gas Detection Equipment."

NOTE

All of the above fans will continue to operate at high speed until the combustible gases have been vented from the building and the detection equipment has been reset. After the detection equipment has been reset, the fans will automatically return to slow speed.

(5) MONITORS

Each fan is provided with OFF-LOW SPEED-HIGH SPEED indicating lights on Motor Control Center MCC-21.

S. POWER DISTRIBUTION SYSTEM

The power distribution system is shown in detail on the contract plans and various shop drawings. Refer to Table III-SG-SG1-1, Screen and Grit Buildings No. 1 and Table III-SG-SG2-2, Screen and Grit Building No. 2 - Facility Equipment Summary, for contract plan and shop drawing numbers which pertain to the power distribution system.

Howard F. Curren

Advanced Wastewater Treatment Plant

OPERATION AND MAINTENANCE MANUAL

◆

VOLUME 2

◆

CITY OF TAMPA

GREELEY AND HANSEN
ENGINEERS

ISSUED TO: ERIC WEISS

SECTION: DSS 6TH FLOOR

FOREWORD

This manual describes the operation and maintenance requirements for the Howard F. Curren Advanced Wastewater Treatment Plant and is divided into five volumes as follows.

Volume 1:	
Chapter I	Introduction
Chapter II	Process Description
Chapter III (Part 1)	Operation and Control
Volume 2:	
Chapter III (Part 2)	Operation and Control
Chapter IV	Laboratory Control
Chapter V	Records
Chapter VI	Safety
Chapter VII	Utilities
Chapter VIII	Personnel
Volume 3:	
Chapter IX	Emergencies
Chapter X	Maintenance
Volume 4:	
Chapters II & III	Figures (11 x 17)

To facilitate use of the manual, a page, table and figure numbering system has been developed to identify chapter, section and page, table or figure number. Refer to section headed "Numbering System" of Chapter I, Introduction, for details.

A general Table of Contents is provided for each volume.

TABLE OF CONTENTS

CHAPTER/SECTION	DESCRIPTION	PAGE
I	**INTRODUCTION**	
I-IN-FW	FOREWORD	I-IN-1
I-IN-MG	USER GUIDE	I-IN-1
I-IN-NS	NUMBERING SYSTEM	I-IN-3
I-IN-PD	PLANT DESCRIPTION	I-IN-7
II	**PROCESS DESCRIPTION**	
II-PD-GN	GENERAL	II-PD-1
II-PD-PR	PRELIMINARY AND PRIMARY TREATMENT	II-PD-6
II-PD-AT	ADVANCED TREATMENT	II-PD-9
II-PD-ST	SLUDGE TREATMENT FACILITIES	II-PD-16
III	**OPERATION AND CONTROL**	
III-GN	**GENERAL**	III-GN-1
III-PR	**PRIMARY FACILITIES**	
III-PR-JC1	JUNCTION CHAMBER AND METER VAULT NO. 1	III-PR-1
III-PR-PST	PRIMARY SEDIMENTATION TANK NOS. 1-8	III-PR-35
III-PR-MSPS	MIXED SLUDGE PUMPING STATION	III-PR-47
III-PR-ADT	ANAEROBIC DIGESTION TANKS (SLUDGE CONTROL)	III-PR-59
III-PR-JC3	JUNCTION CHAMBER NO. 3	III-PR-87
III-PO	**POWER FACILITIES**	
III-PO-RSPS	RAW SEWAGE PUMPING STATION	III-PO-1
III-PO-PG	POWER GENERATION	III-PO-7
III-PO-SPF	STANDBY POWER FACILITY	III-PO-33
III-SG	**SCREENING AND GRIT REMOVAL**	
III-SG-SGB	SCREEN AND GRIT BUILDINGS NO. 1 AND NO. 2	III-SG-1
III-OB	**OXYGEN BIOLOGICAL SYSTEM**	
III-OB-MPS	MAIN PUMPING STATION	III-OB-1
III-OB-OR	OXYGEN REACTORS	III-OB-47
III-OB-JC2	JUNCTION CHAMBER AND METER VAULT NO. 2	III-OB-91
III-OB-IPS	INTERMEDIATE PUMPING STATION	III-OB-99

CHAPTER/SECTION	DESCRIPTION	PAGE
III-OG	**OXYGEN GENERATION AND STORAGE**	
III-OG-OGN & III-OG-OST	OXYGEN GENERATION AND STORAGE EQUIPMENT	III-OG-1
III-DA	**DIFFUSED AIR BIOLOGICAL SYSTEM**	
III-DA-DAR	DIFFUSED AIR REACTORS	III-DA-1
III-DA-BB	BLOWER BUILDING	III-DA-39
III-DA-NPS	NITRIFICATION PUMPING STATION AND JUNCTION CHAMBER NO. 5	III-DA-57
III-FS	**FINAL SEDIMENTATION TANKS**	
III-FS-FST	FINAL SEDIMENTATION TANK NOS. 1-12 AND 13-20	III-FS-1
III-FS-SPS	SLUDGE PUMPING STATION NOS. 1, 2, 3, 4 AND 5	III-FS-37
III-FS-ABP	ACCESS BUILDING AND PIPE TUNNEL	III-FS-69
III-FL	**FILTRATION**	
III-FL-FB	FILTER BUILDINGS NO. 1 AND NO. 2 AND JUNCTION CHAMBER NO. 6	III-FL-1
III-FL-DF	DENITRIFICATION FILTERS	III-FL-61
III-FL-CHF	CHEMICAL HANDLING FACILITIES	III-FL-95
III-FL-ACT	POST AERATION-CHLORINATION TANKS AND JUNCTION CHAMBER NO. 4	III-FL-109
III-FL-DCL	DECHLORINATION FACILITIES	III-FL-121
III-FL-RWPS	RECLAIMED WATER PUMPING STATION	III-FL-135
III-ST	**SLUDGE THICKENING**	
III-ST-STB	SLUDGE TREATMENT BUILDING AND THICKENING TANKS	III-ST-1
III-ST-BTB	BELT THICKENER BUILDING	III-ST-25
III-ST-FBST	FLOATING BIOLOGICAL SOLIDS THICKENER FACILITY	III-ST-55
III-SD	**SLUDGE DEWATERING**	
III-SD-SCB	CONTROL BUILDING AND SLUDGE STORAGE TANKS	III-SD-1
III-SD-SDR	SLUDGE DRYING BEDS	III-SD-21
III-SD-SDW	SLUDGE DEWATERING FACILITY	III-SD-29
III-SD-HDF	SLUDGE HEAT DRYING FACILITY	III-SD-65
III-SD-FPS	FILTRATE PUMPING STATION AND BACKFLOW STRUCTURE	III-SD-109
III-OS	**OVERFLOW STRUCTURE**	III-OS-1

CHAPTER/SECTION	DESCRIPTION	PAGE
III-AD	**ADMINISTRATION**	
III-AD-OMB	MAINTENANCE BUILDING	III-AD-1
III-AD-AB	ADMINISTRATION BUILDING	III-AD-17
III-ES	**ELECTRICAL SYSTEMS**	
III-ES-SWG	13.2 KV METALCLAD SWITCHGEAR	III-ES-1
III-ES-OST	OUTDOOR SUBSTATION TRANSFORMERS	III-ES-9
III-SU	**SITE UTILITY SYSTEMS**	
III-SU-VAL	VALVES	III-SU-I
III-SU-UPS	UTILITY PIPING SYSTEMS [1]	III-SU-9
IV	**LABORATORY CONTROL**	
IV-LC-IN	INTRODUCTION	IV-LC-1
IV-LC-PM	PROCESS MONITORING	IV-LC-2
IV-LC-AC	ANALYSIS OF PURCHASED CHEMICALS	IV-LC-13
IV-LC-IM	INSTRUMENTATION	IV-LC-16
IV-LC-MS	MISCELLANEOUS	IV-LC-18
V	**RECORDS**	
V-RC	RECORDS	V-RC-1
VI	**SAFETY**	
VI-SF-ET	EMERGENCY TELEPHONE NUMBERS	VI-SF-1
VI-SF-GN	GENERAL	VI-SF-1
VI-SF-OH	OCCUPATIONAL HAZARDS AND RISK REDUCTION	VI-SF-2
VI-SF-SW	SPECIAL HAZARDS	VI-SF-13
VI-SF-SE	SAFETY EQUIPMENT	VI-SF-25
VI-SF-LT	LOCKOUT/TAGOUT POLICY AND PROCEDURE	VI-SF-26
VI-SF-RE	REFERENCES	VI-SF-29
VII	**UTILITIES**	
VII-UT	UTILITIES	VII-UT-1

[1] Includes general purpose effluent water, plant water, city water, plant air, and process air systems.

CHAPTER/SECTION	DESCRIPTION	PAGE
VIII	**PERSONNEL**	
VIII-PE-IN	INTRODUCTION	VIII-PE-1
VIII-PE-JD	JOB DESCRIPTIONS	VIII-PE-8
IX	**EMERGENCIES**	
IX-EM-GN	GENERAL	IX-EM-1
IX-EM-EF	ELECTRICAL POWER FAILURE	IX-EM-12
IX-EM-AS	ALARM SYSTEM AND ALARM RESPONSE	IX-EM-16
IX-EM-MF	MECHANICAL EQUIPMENT FAILURE	IX-EM-21
IX-EM-IW	INDUSTRIAL WASTES	IX-EM-22
IX-EM-ER	EMERGENCY FLOW REROUTING	IX-EM-24
IX-EM-SW	SEVERE WEATHER	IX-EM-25
IX-EM-FR	FIRE	IX-EM-26
IX-EM-PI	PERSONAL INJURIES	IX-EM-27
IX-EM-UF	UTILITY FAILURE	IX-EM-27
IX-EM-EE	EMERGENCY EQUIPMENT INVENTORY	IX-EM-28
IX-EM-PP	PLANT PERSONNEL AND EMERGENCY RESPONSE CENTER	IX-EM-29
IX-EM-CO	COORDINATION OF POLICE/FIRE DEPARTMENTS	IX-EM-31
IX-EM-ET	EMERGENCY TELEPHONE NUMBERS	IX-EM-21
X	**MAINTENANCE**	
X-PR	**PRIMARY FACILITIES**	
X-PR-JC1	JUNCTION CHAMBER AND METER VAULT NO. 1	X-PR-1
X-PR-PST	PRIMARY SEDIMENTATION TANK NOS. 1-8	X-PR-28
X-PR-MSPS	MIXED SLUDGE PUMPING STATION	X-PR-45
X-PR-ADT	ANAEROBIC DIGESTION TANKS (SLUDGE CONTROL)	X-PR-51
X-PR-JC3	JUNCTION CHAMBER NO. 3	X-PR-76
X-PO	**POWER FACILITIES**	
X-PO-RSPS	RAW SEWAGE PUMPING STATION	X-PO-1
X-PO-PG	POWER GENERATION	X-PO-18
X-PO-SPF	STANDBY POWER FACILITY	X-PO-26
X-SG	**SCREENING AND GRIT REMOVAL**	
X-SG-SGB	SCREEN AND GRIT BUILDINGS NO. 1 AND NO. 2	X-SG-1

CHAPTER/SECTION	DESCRIPTION	PAGE
X-OB	**OXYGEN BIOLOGICAL SYSTEM**	
X-OB-MPS	MAIN PUMPING STATION	X-OB-1
X-OB-OR	OXYGEN REACTORS	X-OB-36
X-OB-JC2	JUNCTION CHAMBER AND METER VAULT NO. 2	X-OB-48
X-OB-IPS	INTERMEDIATE PUMPING STATION	X-OB-53
X-DA	**DIFFUSED AIR BIOLOGICAL SYSTEM**	
X-DA-DAR	DIFFUSED AIR REACTORS	X-DA-1
X-DA-BB	BLOWER BUILDING	X-DA-11
X-DA-NPS	NITRIFICATION PUMPING STATION AND JUNCTION CHAMBER NO. 5	X-DA-25
X-FS	**FINAL SEDIMENTATION TANKS**	
X-FS-FST	FINAL SEDIMENTATION TANK NOS. 1-12 AND 13-20	X-FS-1
X-FS-SPS	SLUDGE PUMPING STATION NOS. 1, 2, 3, 4 AND 5	X-FS-7
X-FS-ABP	ACCESS BUILDING AND PIPE TUNNEL	X-FS-22
X-FL	**FILTRATION**	
X-FL-FB	FILTER BUILDINGS NO. 1 AND NO. 2 AND JUNCTION CHAMBER NO. 6	X-FL-1
X-FL-DF	DENITRIFICATION FILTERS	X-FL-65
X-FL-CHF	CHEMICAL HANDLING FACILITIES	X-FL-70
X-FL-ACT	POST AERATION-CHLORINATION TANKS AND JUNCTION CHAMBER NO. 4	X-FL-75
X-FL-DCL	DECHLORINATION FACILITIES	X-FL-82
X-FL-RWPS	RECLAIMED WATER PUMPING STATION	X-FL-91
X-ST	**SLUDGE THICKENING**	
X-ST-STB	SLUDGE TREATMENT BUILDING AND THICKENING TANKS	X-ST-1
X-ST-BTB	BELT THICKENER BUILDING	X-ST-16
X-ST-FBST	FLOATING BIOLOGICAL SOLIDS THICKENER FACILITY	X-ST-29
X-SD	**SLUDGE DEWATERING**	
X-SD-SCB	CONTROL BUILDING AND SLUDGE STORAGE TANKS	X-SD-1
X-SD-SDR	SLUDGE DRYING BEDS	X-SD-13
X-SD-SDB	SLUDGE DEWATERING FACILITY	X-SD-14
X-SD-HDF	SLUDGE HEAT DRYING FACILITY	X-SD-40
X-SD-FPS	FILTRATE PUMPING STATION	X-SD-114
X-OS	**OVERFLOW STRUCTURE**	X-OS-1

CHAPTER/SECTION	DESCRIPTION	PAGE
X-AD	**ADMINISTRATION**	
X-AD-OMB	MAINTENANCE BUILDING	X-AD-1
X-AD-AB	ADMINISTRATION BUILDING	X-AD-16
X-ES	**ELECTRICAL SYSTEMS**	
X-ES-SWG	13.2 KV METALCLAD SWITCHGEAR	X-ES-1
X-ES-OST	OUTDOOR SUBSTATION TRANSFORMERS	X-ES-3

III-AD-OMB MAINTENANCE BUILDING (040)

A. GENERAL

The Maintenance Building (formerly the Operations and Maintenance Building) is a two level structure, as shown in Figures III-AD-OMB-1 and 2, and contains the following equipment and systems:

- Sump Pump Equipment
- Hoisting Equipment
- Plant Air
- Heating, Ventilating and Air Conditioning
- Power Distribution System
- Fire Suppression System
- Elevator Equipment

Refer to Table III-AD-OMB-1 Maintenance Building - Facility Equipment Summary, for control numbers, manufacturers, equipment capacities and operation, maintenance, contract plan and shop drawing references. Refer to the Division 4H5 and 5H2D Contractor's Maintenance Manuals for Manufacturer's Service Manuals pertaining to the equipment and systems contained in the Maintenance Building.

The function of the Maintenance Building is to serve the mechanical, electrical and instrumentation maintenance needs for the plant and pumping stations.

B. SUMP PUMPING EQUIPMENT: OM-SP-1 & 2

(1) DESCRIPTION

The sump pumping equipment is provided to automatically pump liquid which flows to the sumps from the floor and equipment drains into the sewage treatment process.

The sump pumps are single stage, vertical, nonclogging, screenless, bottom suction, side discharge, centrifugal vortex type solids handling wet pit pumps driven by constant speed motors. Each sump pump is provided with a liquid level control (to automatically start and stop the pump), a high water level alarm and a control panel.

The sump pumping equipment in the Maintenance Building consists of two Sump Pumps and associated drive motors, designated OM-SP-1 and 2, and associated control panels, cover plates and frames and sump level controls.

The sump pumping equipment is located in the Maintenance Building as follows (see Figure III-AD-OMB-1):

- Sump Pump OM-SP-1, at the south end of the service tunnel
- Sump Pump OM-SP-2, at the north end of the service tunnel

(2) NORMAL OPERATION

Each sump pump is provided with a HAND-OFF-AUTO selector switch located on its associated sump pump control panel near the unit. Under normal operation, when the HAND-OFF-AUTO selector switch

for each sump pump is in the AUTO position, each sump pump will operate automatically in response to changes in the sump liquid level.

(3) START-UP AND SHUTDOWN PROCEDURES

To start up and shut down the sump pumps, use the following procedures:

a. START-UP

- Make sure the effluent water system is operating and open the valves required to supply lubrication water to the pump.
- Open the manually operated valve in the discharge line of each pump
- Place the HAND-OFF-AUTO selector switch for each pump in the AUTO position
- Close the breaker handle on the associated sump pump control panel for each pump
- Close the circuit breaker on motor control center MCC-24

b. SHUTDOWN

- Place the associated HAND-OFF-AUTO selector switch in the OFF position

NOTE

If maintenance is to be performed on a pump, open the circuit breaker on motor control center MCC-24 and open the breaker handle for the pump on its control panel. Follow approved **Lockout/Tagout** procedures (See Chapter VI, Safety).

(4) ALTERNATE OPERATION

Each sump pump may be operated manually when the HAND-OFF-AUTO selector switch is in the HAND position. When the HAND-OFF-AUTO selector switch is in the HAND position, the pump will run continuously.

(5) MONITORS AND ALARMS

Each sump pump is provided with an operational indicating light and a discharge pressure gauge calibrated in feet. Both devices are located at motor control center MCC-24 in the Electrical Room of the Maintenance Building.

C. HOISTING EQUIPMENT: OM-OC-1, OM-MH-2, OM-MH-3, OM-MH-4 & OM-MH-5

(1) DESCRIPTION

The hoisting equipment is provided to lift equipment or other objects in the Maintenance Building as required. The hoisting equipment in the Maintenance Building consists of one 5-ton capacity electric motor operated Bridge Crane Hoist, designated OM-OC-1, three 2-ton capacity motor operated hoists,

designated OM-MH-2, OM-MH-3, OM-MH-4 and one 2-ton capacity manually operated hoist designated OM-CH-5 (Note: Hoist number OM-MH-1 was removed from service).

The hoists in the Maintenance Building are located as shown in Figure III-AD-OMB-1:

- Crane Hoist OM-OC-1, in the Crane Bay
- Hoists OM-MH-2 & 3, in the Pump Station and Electrical Shops
- Hoist OM-MH-4, in the Storage Mezzanine
- Hoist OM-MH-5, in the Welding Shop

Refer to Table III-AD-OMB-1 Maintenance Building - Facility Equipment Summary, for control numbers, manufacturers, equipment capacities and operation, maintenance, contract plan and shop drawing references.

a. CRANE HOIST: OM-OC-1

The overhead crane consists of a monorail trolley hoist with electric motor operated trolley and hoist, a motor operated top running crane bridge and a pendant control station suspended from the monorail trolley.

The crane and hoist motor is a 2-speed motor and is equipped with cushioned starting and positive soft cushioned braking system. The hoist and trolley motor is a single speed motor and is equipped with multiple disc brakes which engage for positive stopping when the motors are de-energized.

b. MONORAIL HOISTS: OM-MH-2, 3 AND 4

Monorail Hoists OM-MH-2, 3 and 4 consist of a monorail trolley, an electric operated trolley and hoist and a pendant control station suspended from each hoist. Each monorail hoist is provided with a two speed motor. The trolley and hoist motors are with d.c. magnet actuated disc brakes to provide smooth and rapid stops when the motors are de-energized.

c. MANUALLY OPERATED (CHAIN) HOIST: OM-MH-5

Manually Operated Chain Hoist OM-MH-5 is provided with a hand geared hoist and trolley system and a flexible load chain. Mechanical load brakes are provided in the hoist gear train to provide a controlled lowering speed and to prevent a load from free falling in the event of simultaneous motor brake and power supply failure.

(2) <u>NORMAL OPERATION</u>

a. CRANE HOIST: OM-OC-1

The overhead crane is provided with a pendant control station with push buttons which control operation of the crane, hoist and trolley motors.

The pendant control station is provided with FORWARD-REVERSE push buttons to operate the trolley motor and the crane motor and UP-DOWN push buttons to operate the hoist motor.

b. MONORAIL HOISTS: OM-MH-2, 3 AND 4
Each push button controller (pendant) is provided with an operational indicating light and two push buttons for each motor, one for each direction of travel.

D. PLANT AIR (SEE FIGURES III-SU-UPS-1 THORUGH 3)

The plant air equipment at the Maintenance Building consists of piping and fittings, shutoff valves, hose connections, air filters, pressure regulating valves, pressure gauges and air fixtures in the Instrument Shop.

Compressed air is supplied to the plant air equipment by the plant air system as described in the section headed "Main Pumping Station," in Chapter III-OB-MPS of this manual.

E. HEATING, VENTILATING AND AIR CONDITION EQUIPMENT: OM-AHU-1, 2, 3, 4 & 5 (OM-CU-1, 2); OM-AC-6 (OM-WCC-1); OM-HV-1 (OM-EHC-1); OM-EH-1, 2, 3, 4, 5, 6, 7, 8, 9, 10, 11, 12, 13, 14, 15, 16, 17 & 18; OM-E-1, 2, 3, & 5; OM-REF-2, 3, 4, 5, 6, 7, 8, 10, 11, 13, 14, 15, 16, 17, 18, 19, 20 & 21; OM-CF-1, 2, 3, 4, 5, 6, 7, 8, 9, 10 & 11; OM-EUH-1, 2, 3, 4, 5, 6, 7, 8, 9, 10 & 11 AND OM-EF-1, 2 & 3

(1) DESCRIPTION

The heating, ventilating and air conditioning (HVAC) equipment is provided to heat, cool and ventilate the Maintenance Building.

The equipment includes Air Handler Units OM-AHU-1, 2, 3, 4, and 5 (Chiller Units OM-CU-1 and 2) as well as one Air Conditioner Unit OM-AC-6; Heating and Ventilating Unit OM-HV-I; Roof Exhaust Fans OM-REF-2, 3, 4, 5, 6, 7, 8, 10, I1, 13, 14, 15, 16, 17, 18, I9, 20 and 2I; Exhaust Fans OM-E-1, 2, 3, 4 and 5; Electric Duct Heaters OM-EH-1, 2, 3, 4, 5, 6, 7, 8, 9, 10, I1, 12, 13, 14, 15, 16, 17 and 18; Circulating Fans OM-CF-1, 2, 3, 4, 5, 6, 7, 8, 9, 10 and 11; Electric Unit Heaters OM-EUH-1, 2, 3, 4, 5, 6, 7, 8, 9, 10 and 11. See Table III-AD-OMB-2, Heating, Ventilation and Air Conditioning Equipment, for information regarding the area served, capacity, type and purpose of each piece of equipment.

a. AIR HANDLER UNITS: OM-AHU-I, 2, 3, 4, & 5
Each Air Handler Unit is mounted on the roof of the Maintenance Building and employs Chiller Units OM-CU-1 and 2 and the associated Chilled Water Pumps OM-CWP-1 and 2. These units provide all of the conditioned air to specific areas within the Maintenance Building.

All of the air from the Maintenance Building is exhausted to the atmosphere.

b. HEATING, VENTILATING AND AIR CONDITIONING UNITS: OM-HV-1 & OM-AC-6
The heating and ventilating unit, OM-HV-1, is an air handling unit capable of supplying heated air to the area served.

The air conditioning unit, OM-AC-6, is an air handling unit capable of supplying both heated and chilled air to the area served.

c. ROOF EXHAUST, CIRCULATING FANS AND EXHAUST FANS:
OM-REF-2, 3, 4, 5, 6, 7, 8, 10, 11, 13, 14, 15, 16, 17, 18, 19, 20 & 21; OM-CF-1, 2, 3, 4, 5, 6, 7, 8, 9, 10 & 11; OM-E-1, 2, 3, & 5 AND OM-EF-1, 2 & 3
The roof exhaust fans, circulating fans and exhaust fans are provided to exhaust and circulate air from the Maintenance Building.

d. ELECTRIC DUCT HEATERS AND ELECTRIC UNIT HEATERS: OM-EH-1, 2, 3, 4, 5, 6, 7, 8, 9, 10, 11, 12, 13, 14, 15, 16, 17 & 18; OM-EUH-1, 2, 3, 4, 5, 6, 7, 8, 9, 10 & 11
The electric duct heaters are provided in the ductwork associated with the existing air conditioning system. Each electric duct heater is provided to automatically increase the air temperature in its associated duct to maintain the set point temperature on its associated thermostat.

(2) NORMAL OPERATION

a. AIR HANDLER UNITS: OM-AHU-1, 2, 3, 4 & 5
Each air handler is provided with an ON-OFF disconnect switch at the unit, a HAND-OFF-AUTO selector switch located at both motor control center MCC-27 and the Central Control Panel located in the service tunnel. The units operate through a 7-day timing device which allows for both "occupied" and "unoccupied" modes and cycles the units accordingly while in the AUTO position. Room thermostats are also provided for each unit that, when the selector switch is in the AUTO position, will cycle the units according to the set point.

b. HEATING, VENTILATING AND AIR CONDITIONING UNITS OM-HV-1 & OM-AC-6
The heating and ventilating unit OM-HV-1 employs an electric heating coil, OM-EHC-1, which is activated when the heating and ventilation unit is activated. The heating and ventilating unit is provided with a HAND-OFF-AUTO selector switch with a locking device for the OFF position, a thermostat located in the area served and a HAND-OFF-AUTO selector switch with a red running indicator light on Motor Control Center MCC-26A. The heating and ventilating unit is also provided with a momentary test push button at the unit. The unit operates through a 7-day timing device which allows for both "occupied" and "unoccupied" modes and cycles the unit accordingly.

The air conditioning unit OM-AC-6 employs a chilled water cooling coil OM-WCC-1 when providing cooled air and reheat coils OM-EH-14 through 18 when providing heated air. The supply and return fans on the unit can be operated independently and are provided with ON-OFF switches and momentary test push buttons at each unit. The fans are also provided with separate HAND-OFF-AUTO selector switches at temperature control panel OM-TCP-1. The unit operates through a 7 day timing device which allows for both "occupied" and "unoccupied" modes and cycles the unit accordingly.

c. ROOF EXHAUST FANS: OM-REF-2, 3, 4, 5, 6, 7, 8, 10, 11, 13, 14, 15, 16, 17 ,18, 19, 20 & 21
(Roof Exhaust Fans OM-REF-1, 9 and 12 have been removed from service.)

Roof Exhaust Fans OM-REF-2, 5, 6 and 7 are each provided with an ON-OFF switch with a thermal overload and a red running indicator light both located at the unit on the roof.

Roof Exhaust Fan OM-REF-3 is provided with a HAND-OFF-AUTO selector switch which controls the unit through a thermostat mounted in the area served. The unit is also provided with a thermal overload and pilot light as well as a red running indicator light mounted at the unit on the roof.

Roof Exhaust Fan OM-REF-4 is provided with a HAND-OFF-AUTO selector switch mounted in the area served as well as an ON-OFF switch with a locking device for the OFF position at the unit. While in the AUTO position, the unit is controlled through a thermostat located in the area served. A red running indicator light is located at the unit on the roof and will show that the unit is in operation.

Roof Exhaust Fan OM-REF-8 is provided with START and STOP buttons and a red running indicator light located at motor control center MCC-26. The fan is also provided with an ON-OFF switch with a locking device for the OFF position located at the unit on the roof.

Roof Exhaust Fans OM-REF-10, 11, 13, 14, 15, 16 and 17 are each provided with an ON-OFF selector switch at the temperature control panel OM-TCP-1.

Roof Exhaust Fan OM-REF-18, 19, 20 and 21 are each provided with a HAND-OFF-AUTO selector switch on the temperature control panel OM-TCP-1. While in the AUTO mode, the unit operate through thermostats located in the area served.

d. CIRCULATING FANS: OM-CF-1, 2, 3, 4, 5, 6, 7, 8, 9, 10 & 11
Each variable speed circulating fan operates through an ON-OFF wall switch. Once the unit is energized, an ON-OFF-TWO SPEED pull-chain control is provided to vary the fans speed. Each unit operates through a separate area thermostat mounted at the unit.

e. EXHAUST FANS: OM-E-1, 2, 3 & 5
(Exhaust Fan OM-E-4 has been removed from service.)
Exhaust Fans OM-E-1 and 2 are roof mounted and are provided with an ON-OFF switch with a locking device for the OFF position at the unit. The unit are provided with an ON-OFF switch and a red running indicator light located in the area served.

Exhaust Fans OM-E-3 and 5 are also roof mounted and are each provided with an ON-OFF switch and a red running indicator light located in the area served.

f. EXHAUST FANS: OM-EF-1, 2, & 3

Exhaust Fans OM-EF-1 and 2 are wall mounted and are provided with a HAND-OFF-AUTO selector switch at the temperature control panel OM-TCP-1. When in the AUTO position, the units will operate through a thermostat in the area served.

Exhaust Fan OM-EF-3 is also wall mounted and operates whenever the lights are turned on through a two-pole light switch located in the Locker Room.

g. ELECTRIC DUCT HEATERS: OM-EH-1, 2, 3, 4, 5, 6, 7, 8, 9, 10, 11, 12, 13, 14, 15, 16, 17 & 18

Each electric duct heater is provided with a thermostat located in the area served by the unit and with an air flow switch located in the ductwork. The duct heaters will operate only when an air flow is sensed in the ductwork and the temperature of the area served is below the set point control temperature on the thermostat.

h. ELECTRIC UNIT HEATERS: OM-EUH-1, 2, 3, 4, 5, 6, 7, 8, 9, 10 & 11

Electric unit heaters are controlled by respective room thermostats to maintain a set point temperature in the respective room.

(3) START-UP AND SHUTDOWN PROCEDURES

To start-up and shut down the heating, ventilating and air conditioning equipment, use the following procedures:

a. AIR HANDLER UNITS: OM-AHU-1, 2, 3, 4 & 5

1. Start-Up

- place the HAND-OFF-AUTO selector switches (at both MCC-27 and the Central Control Panel) in the AUTO position and the air handler will be activated and will operate on the timer

- Place the HAND-OFF-AUTO selector switch in the HAND position and the unit will operate continuously

- If the HAND-OFF-AUTO selector switch at MCC-27 is in the AUTO position, the control of operating the air handling units transfers directly to the HAND-OFF-AUTO selector switch at the Central Control Panel.

2. Shutdown

- Place the HAND-OFF-AUTO selector switch, at MCC-27 or the Central Control Panel, in the OFF position.

NOTE

If maintenance is to be performed on an air handler unit, open the appropriate circuit breaker and place the ON-OFF switch at the unit in the

OFF position. Follow approved **Lockout/Tagout** procedures (See Chapter VI, Safety).

b. HEATING, VENTILATING AND AIR CONDITIONING UNITS: OM-HV-1 & OM-AC-6

1. Start-Up
   - Place the HAND-OFF-AUTO selector switch in the AUTO position and the unit will operate through the thermostat located in the area served and through the 7-day timing device
   - The timing device allows for weekends and nights ("Unoccupied Mode") and days ("Occupied Mode")
   - Place the HAND-OFF-AUTO selector switch in the HAND position and the unit will operate continuously

2. Shutdown
   - Place the HAND-OFF-AUTO selector switch in the OFF position.

NOTE

If maintenance is to be performed on a heating, ventilating or air conditioning unit, open the appropriate circuit breaker on the Motor Control Center MCC-26A and place the HAND-OFF-AUTO selector switch at unit in OFF position. Follow approved **Lockout/Tagout** procedures (See Chapter VI, Safety).

c. ROOF EXHAUST FANS: OM-REF-2, 5, 6 & 7

1. Start-Up
   - Place ON-OFF switch at the unit in ON position

2. Shutdown
   - Place ON-OFF switch at the unit in OFF position

d. ROOF EXHAUST FAN: OM-REF-3

1. Start-Up
   - Place the HAND-OFF-AUTO selector switch in the AUTO position and the fan will operate through the thermostat set point temperature
   - Place the HAND-OFF-AUTO selector switch in the HAND position and the unit will operate continuously

2. Shutdown
   - Place the HAND-OFF-AUTO selector switch in the OFF position

e. ROOF EXHAUST FAN: OM-REF-4
   1. Start-Up
      - Place the ON-OFF switch at the unit in the ON position
      - Place the HAND-OFF-AUTO selector switch in the AUTO position and the unit will operate through the set point of the thermostat
      - Place the HAND-OFF-AUTO selector switch in the HAND position and the unit will operate continuously
   2. Shutdown
      - Place the HAND-OFF-AUTO selector switch in the OFF position

f. ROOF EXHAUST FAN: OM-REF-8
   1. Start-Up
      - Place the ON-OFF switch at the unit in the ON position
      - Push the START button at MCC-26
   2. Start-Up
      - Push the STOP button at MCC-26

g. ROOF EXHAUST FANS: OM-REF-10, 11, 13, 14, 15, 16 & 17
   1. Start-Up
      - Place the ON-OFF switch at OM-TCP-1 in the ON position
   2. Shutdown
      - Place ON-OFF switch at OM-TCP-1 in the OFF position

NOTE

If the maintenance is to be performed on a unit, open the circuit breaker on MCC-26A and place the ON-OFF switch to the OFF position and engage the locking device. Follow approved **Lockout/Tagout** procedures (See Chapter VI, Safety).

3. ROOF EXHAUST FAN: OM-REF-18

4. Start-Up
   - Place the HAND-OFF-AUTO selector switch at OM-TCP-1 in the AUTO position and the unit will operate through the Elevator Machine Room's thermostat.
   - When the HAND-OFF-AUTO selector switch at OM-TCP-1 is placed in the HAND position, the unit will operate continuously.

5. Shutdown
   - Place HAND-OFF-AUTO selector switch at OM-TCP-1 in the OFF position

NOTE

If the maintenance is to be performed on a unit, place HAND-OFF-AUTO selector switch in the OFF position and engage the locking device. Follow approved **Lockout/Tagout** procedures (See Chapter VI, Safety).

h. ROOF EXHAUST FANS: OM-REF-19

1. Start-Up
   - Place the ON-OFF switch at the unit in the ON position
   - Place HAND-OFF-AUTO selector switch at OM-TCP-1 to the AUTO position, the unit will operate when Air Conditioner OM-AC-6 is operating
   - Place the HAND-OFF-AUTO selector switch at OM-TCP-1 in the HAND position and the unit will operate continuously.

2. Shutdown
   - When the HAND-OFF-AUTO selector switch at OM-TCP-1 is in the AUTO position, the unit will stop when Air Conditioner OM-AC-6 stops.
   - When the HAND-OFF-AUTO selector switch at OM-TCP-1 is in the HAND position, move the switch to the OFF position.

NOTE

If the maintenance is to be performed on a unit, place HAND-OFF-AUTO selector switch in the OFF position and engage the locking device. Follow approved **Lockout/Tagout** procedures (See Chapter VI, Safety).

i. ROOF EXHAUST FANS: OM-REF-20 & 21

1. Start-Up
   - Place HAND-OFF-AUTO selector switch at OM-TCP-1 to the AUTO position and the unit will operate through the thermostat set point temperature.
   - Place the HAND-OFF-AUTO selector switch at OM-TCP-1 in the HAND position and the unit will operate continuously.

2. Shutdown
   - Place the HAND-OFF-AUTO selector switch at OM-TCP-1 in the OFF position

NOTE

If the maintenance is to be performed on a unit, place HAND-OFF-AUTO selector switch in the OFF position and engage the locking device. Follow approved **Lockout/Tagout** procedures (See Chapter VI, Safety).

j. CIRCULATING FANS: OM-CF-1, 2, 3, 4, 5, 6, 7, 8, 9, 10 & 11

1. Start-Up
   - Place the ON-OFF wall switch to the ON position
   - Adjust the speed of the fan using the ON-OFF/TWO SPEED pull chain and the unit will operate through room thermostat.

2. Shutdown
   - Place the ON-OFF wall switch to the OFF position

     or
   - The fan should shut down when the desired temperature is reached.

NOTE

If maintenance is to be performed on the units, place the ON-OFF switch in the OFF position and open the appropriate breaker at motor control center MCC-26A. Follow approved **Lockout/Tagout** procedures (See Chapter VI, Safety).

k. EXHAUST FANS: OM-E-1 & 2

1. Start-Up
   - Place ON-OFF switch at the unit in ON position

- Place ON-OFF switch located in the fumehood in the ON position

NOTE

The ON-OFF switch located at the unit must be in the ON position at all times except when maintenance is performed.

2. Shutdown
   - Place the ON-OFF switch in the fumehood in the OFF position

NOTE

If maintenance is to be performed on a unit, place the ON-OFF switch at the unit in the OFF position and engage the locking device. Follow approved **Lockout/Tagout** procedures (See Chapter VI, Safety).

l. EXHAUST FANS: OM-E-3 & 5

1. Start-Up
   - Place ON-OFF switch at unit in ON position

2. Shutdown
   - Place the ON-OFF switch in the OFF position

NOTE

If maintenance is to be performed on a unit, place the ON-OFF switch at unit in the OFF position and engage the locking device. Follow approved **Lockout/Tagout** procedures (See Chapter VI, Safety).

m. EXHAUST FANS: OM-EF-1 & 2

1. Start-Up
   - Place HAND-OFF-AUTO selector switch in the AUTO position, and the units will operate through the thermostats provided in the area served
   - Place HAND-OFF-AUTO selector switch in the HAND position, and the units will operate continuously.

2. Shutdown
   - Place the HAND-OFF-AUTO selector switch in the OFF position

NOTE

If maintenance is performed on the units, place the HAND-OFF-AUTO selector switch in the OFF position and engage the locking device. Follow approved **Lockout/Tagout** procedures (See Chapter VI, Safety).

n. EXHAUST FANS: OM-EF-3

1. Start-Up
   - Place the two-pole light switch in the ON position, the fan will operate when the light in the Locker Room is on

2. Shutdown
   - Place the two-pole light switch in the OFF position

NOTE

If maintenance is performed on the unit, place the two-pole light switch in the OFF position and open the appropriate breaker on the motor control center MCC-26. Follow approved **Lockout/Tagout** procedures (See Chapter VI, Safety).

o. ELECTRIC DUCT HEATERS: OM-EH-1, 2, 3, 4, 5, 6, 7, 8, 9, 10, 11, 12, 13, 14, 15, 16, 17 & 18

1. Start-Up
   - Set thermostat control for each unit to maintain the desired minimum temperature.

2. Shutdown
   - The unit will automatically shutdown when the desired temperature is reached.

NOTE

Duct heaters will only operate when air flow is sensed in the ductwork.

p. ELECTRIC UNIT HEATERS: OM-EUH-1, 2, 3, 4, 5, 6, 7, 8, 9, 10 & 11

I. Start-Up
   - The units will operate when the temperature in the area served drops below the thermostat setting.

2. Shutdown
   - The units will shutdown when the temperature in the area served rises above the thermostat setting.

(4) MONITORS AND ALARMS

a. AIR HANDLER UNITS: OM-AHU-1,2,3,4 & 5

Each air handler unit is provided with a thermostat in the return and supply air duct to shutdown the fan when the air temperature rises above the set point. Each unit is also provided with a red running indicator light located at motor control center MCC-27.

b. HEATING AND VENTILATING UNIT: OM-HV-1

An air temperature indicator is mounted on temperature control panel OM-TCP-1 to monitor the temperature of the discharge air.

A low temperature thermostat, upon sensing a set point temperature (38 degrees F is suggested) in the discharge duct, shuts down the unit and initiates an audible and visible alarm at the temperature control panel OM-TCP-1.

Air flow failure as sensed by a differential pressure switch across the fan, while the unit is set to the AUTO position, will shutdown the sensed fan and initiate an audible and visible alarm at the temperature control panel OM-TCP-1 for the appropriate fan.

c. AIR CONDITIONING UNIT: OM-AC-6

Air temperature indicators are provided at the temperature control panel OM-TCP-1 to monitor the temperature of the outside, discharge and return air.

A low temperature thermostat, upon sensing a set point temperature in the discharge air, shall shutdown both the supply and return fans and initiate an alarm at the temperature control panel.

Air flow failure as sensed by a differential pressure switch across the supply and return fans, upon sensing no flow when the fans are running in the AUTO position, shall shutdown the sensed fan and initiate an alarm at the temperature control panel OM-TCP-1.

d. ROOF EXHAUST FANS: OM-REF-2, 3, 4, 5, 6, 7 & 8

Each roof exhaust fan is provided with a red running indicator light at motor control center MCC-26.

e. ROOF EXHAUST FANS: OM-REF-10, 11, 13, 14, 15, 16, 17, 18, 19, 20 & 21

Each roof exhaust fan is provided with a red running indicator light on Motor Control Center MCC-26 and an alarm light on the temperature control panel OM-TCP-1.

f. EXHAUST FANS: OM-E-1, 2, 3 & 5

Each exhaust fan is provided with a red running indicator light mounted at the unit.

F. POWER DISTRIBUTION SYSTEM

The power distribution system is shown in detail on the contract plans and various shop drawings.

G. FIRE SUPPRESSION SYSTEM

The fire suppression system consists of electronic alarms and a sprinkler system located in the Crane Bay area at the grade and mezzanine levels. The system is provided so that when heat or smoke is sensed, the system will initiate an alarm through the Fire Alarm Panel (for location see Figure III-AD-OMB-1). The individual sprinkler heads are heat triggered and water for the system is supplied by the general purpose effluent water system. The fire suppression system is shown in detail on the contract plans and shop drawings.

H. ELEVATOR EQUIPMENT

The elevator equipment provides safe and efficient means to move heavy items to the upper level (Mezzanine Storage) of the Maintenance Building.

Refer to Table III-AD-OMB-1 Maintenance Building - Facility Equipment Summary, for control numbers, manufacturers, equipment capacities and operation, maintenance, contract plan and shop drawing references.

(1) DESCRIPTION

The elevator equipment in the Maintenance Building consists of one Elevator and associated drive equipment, designated OM-EL-1, and associated controls and appurtenances located in the elevator machine room.

The elevator equipment operates in the Maintenance Building between the first level Pump Station Shop and the second level Mezzanine Storage. The elevator has a capacity of 5000 pounds and is hydraulically operated at a speed of 125 fpm. Oil hydraulic pumps that operate each elevator are locate in the Elevator Machine Room and are provided with 60 hp motors.

(2) NORMAL OPERATION

An elevator control panel is located in the elevator car. The elevator operates through push buttons located on the elevator control panel and a single CALL push button located at each landing. The elevator is also provided with a red EMERGENCY STOP switch, a HOLD OPEN button and an ALARM button.

(3) STARTUP AND SHUTDOWN PROCEDURES

Upon depression of the desired floor button on the elevator control panel, the car travels to the designation chosen, providing the doors at the car and in the hoistway are closed. The HOLD OPEN button is provided to hold open the door when depressed.

When the EMERGENCY STOP switch is placed in the OFF position, the elevator car will stop motion and an audible alarm will sound. After the button is released, the car will resume operating as normal.

The elevator controls are also tied into the Fire Suppression System and will return automatically to the grade level when certain smoke or heat detectors are activated.

(4) MONITORS AND ALARMS

At each landing, IN-USE lights are provided to indicate when the elevator car is in motion.

The ALARM button can be depressed at any time and an audible alarm will sound outside the hoistway.

III-AD-AB ADMINISTRATION BUILDING

A. GENERAL

The Administration Building is a two level structure containing the following equipment and systems:

- Elevator Equipment
- Sewage Pumping Equipment
- Laboratory Compressed Air and Vacuum Equipment
- Deionized Water Equipment
- Hot Water System
- Heating, Ventilating and Air Conditioning
- Power Distribution System

Refer to Table III-AD-AB-1 Administration Building - Facility Equipment Summary, for control numbers, manufacturers, equipment capacities, and operation, maintenance, contract plan and shop drawing references. Refer to the Division 5H2B Contractor's O & M Manual for Manufacturer's Service Manuals pertaining to the equipment and systems contained in the Administration Building. Refer to Figure III-AD-AB-1 for floor plan and layout of the Administration Building.

B. ELEVATOR EQUIPMENT: AD-ELEV-1 AND 2

The elevator equipment in the Administration Building consists of two Elevators and Associated Drive Equipment, designated AD-ELEV-1 and 2, and associated controls and appurtenances located in the elevator machine room.

The elevator equipment operates in the Administration Building as follows:

- Elevator AD-ELEV-1, between the Lobby at the Northeast corner of the lower level and the Reception Area at the northeast corner of the second level.

- Elevator AD-ELEV-2, between the Service Lobby at the southwest corner of the lower level and the Corridor at the southwest corner of the second level.

NOTE

Both elevators, presently (December 1991) have stops at the ground floor and the second (main) floor. Both elevators have provisions to add a stop at the third floor when the building is expanded in the future.

Elevators AD-ELEV-1 and 2 have capacity ratings of 2500 and 4000 pounds, respectively, and are hydraulically operated at a speed of 125 fpm. Hydraulic pumps that operate each elevator are located in the Elevator Machine Room and are provided with 25 hp motors.

C. SEWAGE PUMPING EQUIPMENT: AD-SSP-1 AND 2

(1) DESCRIPTION

The Sewage Pumping Equipment is provided to pump sewage and laboratory waste from the Administration Building to the Main Pumping Station Discharge Channel. The sewage pumps are located in a 6-foot diameter wet pit pumping station located southwest of the Administration Building.

The Sewage Pumping Equipment consists of submersible sewage pumps, designated AD-SSP-1 and 2 and associated controls.

Each submersible sewage pump is a single stage, side discharge, centrifugal type, solids handling, submersible sewage pump driven by a 5 hp vertical constant speed motor.

Each pump has a rated capacity of 300 gpm at a rated head of 38 feet, at a pump speed of 1800 rpm.

Each submersible sewage pump is provided with an ON-OFF switch with a locking device for the OFF position and a START push button for hand operation at the pumping station and a HAND-OFF-AUTO selector switch, a SSP-1-SSP-2 lead-lag selector switch, a running indication light and an elapsed time meter on MCC 91. A Bubbler Wet Well Level Control Panel, located in the Electrical Room contains start and stop controls for the lead and lag pumps.

(2) NORMAL OPERATION

Under normal operation only one of the two submersible sewage pumps is required to pump waste from the Administration Building. The second pump is a standby unit.

(3) START-UP AND SHUTDOWN PROCEDURES

To start-up and shutdown the submersible sewage pumping equipment, use the following procedures:

a. START-UP

- Verify that the ON-OFF switch at the pumping station is in the ON position
- Verify that the manual discharge plug valves at the pumping station are open
- Verify that power to the Bubbler Wet Well Level Control Panel is on at Lighting Panel LP-91A (Circuit No. 4)
- Close the circuit breaker for the submersible sewage pumps on Motor Control Center MCC-91
- Turn the HAND-OFF-AUTO selector switches to the AUTO position for each submersible sewage pump
- Turn the SSP-1-SSP-2 lead-lag selector switch to the desired lead pump position
- The pump will start when the wet well level rises above the set point

b. SHUTDOWN

- Turn the HAND-OFF-AUTO selector switch on MCC 91 to the OFF position or turn the ON-OFF switch at the pumping station to the OFF position

NOTE

If maintenance is to be performed on the submersible sewage pumps open the circuit breaker on MCC-91 and turn the ON-OFF switch at the pumping station to the OFF position and engage the locking device. Follow approved **Lockout/Tagout** procedures (See Chapter VI, Safety).

(4) MONITORS AND ALARMS

Each submersible sewage pump is provided with a red running indication light and elapsed time meter on Motor Control Center MCC-91.

A high wet well level will initiate a audible and visual alarm in the electrical room.

D. LABORATORY COMPRESSED AIR EQUIPMENT: AD-AC-1A AND 1B

(1) DESCRIPTION

The laboratory compressed air equipment supplies dry compressed air to the Administration Building laboratories. The laboratory air equipment consists of piping and fittings, shut off valves and a base mounted package Air Compressor System located in the Mechanical Room.

The packaged air compressor system consists of an inlet air filter, two air compressors, a moisture separator, a 120 gallon air receiver, and a refrigerated air dryer. The air compressors are single-stage, water cooled, oil free, rotary type compressors driven by constant speed 15 hp motors. Each air compressor delivers 40 scfm of air at 55 psig. The air dryer is an air cooled refrigeration type.

The packaged air compressor system is provided with a unit mounted control and annunciator panel. The control and annunciator panel is provided with a HAND-OFF-AUTO selector switch, a lockable disconnect switch, a pressure gauge and run indicator light for each compressor and is provided with audible and visual alarm indication and alarm SILENCE push button.

(2) NORMAL OPERATION

Under normal operation, the HAND-OFF-AUTO switch on the control panel for each compressor is required to be in the AUTO position. The air compressors will operate automatically as required to maintain the plant air system pressure. The alternator automatically switches lead and lag compressors. If the lead unit fails or for any reason cannot meet the system air requirements, the lag compressor will automatically start up and activate an alarm.

(3) START-UP AND SHUTDOWN PROCEDURES

To start-up and shut down the laboratory air equipment use the following procedures:

a. START-UP

- Open the valve required to supply cooling water to the packaged air compressor system
- Close the circuit breaker on Motor Control Center MCC-91
- Close the disconnect switches at the unit for each air compressor and the air dryer

- Place each HAND-OFF-AUTO switch on the compressor control panel in the AUTO position
- The compressors will start and alternate based on pressure in the system

b. SHUTDOWN

- Place the HAND-OFF-AUTO selector switch on the control panel in the OFF position
- Open and close receiver drain valve to check and remove moisture
- Close the cooling water supply valve

NOTE

If maintenance is to be performed on the equipment, open the disconnect switch at the associated unit and the circuit breaker on Motor Control Center MCC-91 and engage the locking device. Follow approved **Lockout/Tagout** procedures (See Chapter VI, Safety).

(4) MONITORS AND ALARMS

The packaged air compressor system is provided with pressure indicating gauges and run indicating lights. Each unit is provided with relays to shut down the unit and initiate audible and visual alarms upon occurrence of any of the following:

- Separator No. 1 High Level
- Separator No. 2 High Level
- Receiver High Level

In addition, low pressure initiates audible and visual alarms at the unit and through the DDC system.

E. LABORATORY VACUUM EQUIPMENT: AD-VAC-1A AND 1B

(1) DESCRIPTION

The laboratory vacuum equipment provides a vacuum system for the Administration Building laboratories. The laboratory vacuum equipment consists of piping and fittings, shut off valves and a base mounted packaged vacuum pump set located in the Mechanical Room.

The packaged vacuum pump set consists of two vacuum pumps, motors, valves, gauges, switches and a 120 gallon receiving tank. The vacuum pumps are rotary type high vacuum water cooled duplex pumps driven by 5 hp motors. Each vacuum pump is rated at 25 scfm at 19 inches vacuum at 1750 rpm.

The packaged vacuum pump set is provided with a unit mounted control and annunciator panel. The control and annunciator panel is provided with a HAND-OFF-AUTO selector switch a lockable disconnect switch, a vacuum gauge and run indicating lights for each vacuum pump and is provided with an audible and visual alarm indication and alarm SILENCE push button.

(2) NORMAL OPERATION

Under normal operation the HAND-OFF-AUTO switch on the control panel for each vacuum pump is required to be in the AUTO position. The vacuum pumps will operate automatically as required to maintain the system vacuum. The alternator automatically switches lead and lag vacuum pumps. If the lead unit fails or for any reason the vacuum falls below 19 inches, the lag vacuum pump will automatically start up and activate an alarm.

(3) START-UP AND SHUTDOWN PROCEDURES

To start-up and shutdown the laboratory vacuum equipment use the following procedures:

a. START-UP

- Open the valve required to supply cooling water to the packaged vacuum system.
- Close the circuit breaker on Motor Control Center MCC-91
- Close the disconnect switches at the unit for each vacuum pump
- Place each HAND-OFF-AUTO switch on the vacuum pump control panel in the AUTO position
- The vacuum pumps will start and alternate based on vacuum in the system

b. SHUTDOWN

- Place the HAND-OFF-AUTO selector switch on the control panel in the OFF position
- Close the cooling water supply valve.

NOTE

If maintenance is to be performed on the equipment, open the disconnect switch at the associated unit and the circuit breaker on the Motor Control Panel MCC-91 and engage the locking device. Follow approved **Lockout/Tagout** procedures (See Chapter VI, Safety).

(4) MONITORS AND ALARMS

The packaged vacuum pump system is provided with vacuum indicating gauges and run indicating lights. The system is provided with relays to indicate and audible and visual alarm and start the lag vacuum pump if the lead pump fails or if the demand is above the capacity of the lead pump. Abnormal vacuum pressure is monitored and alarmed by the DDC system.

F. DEIONIZED WATER EQUIPMENT AD-DI-1

The deionized water equipment is provided to supply deionized water for the Administration Building Laboratories. The deionized water equipment is located in Service Storage Room.

The deionized water equipment consists of a packaged reverse osmosis system, complete with a water softener, storage tank, activated carbon filters, prefilters, tank filter, mixed bed deionizers, ultra violet purifiers, resistivity monitor, recirculating pumps, electrical control panel and associated appurtenances.

The deionized water equipment has a rated capacity of 500 gallons per day.

Each recirculating pump is a stainless steel, 5 stage, horizontal pump driven by a 3/4 hp constant speed motor.

Each recirculating pump has a rated capacity of 5 gpm at 67 psi discharge pressure, at a pump speed of 3450 rpm.

Only one of the recirculating pumps is required to pump deionized water for the Administration Building. The second pump is a standby unit.

The deionized water equipment is provided with a electrical control panel. The control panel is provided with a main disconnect switch, control transformer and power on indication lights.

Each recirculating pump is provided with a pump on indicating light on the control panel. A PUMP1-PUMP2 selector switch is provided on the control panel. Each ultra-violet (UV) lamp is provided with an ON-OFF switch and a UV lamp on indicating light on the control panel. An adjustable pressure switch on the deionized water equipment starts and stops the selected recirculating pump and UV lamps based on system demand. The water softener is provided with an ON-OFF switch and a on indicating light on the control panel.

Low level (pressure) and low water quality alarm indication are provided on the control panel.

G. HOT WATER SYSTEM: AD-GWH-1 AND AD-DPC-1

The hot water system is provided to supply hot water for domestic and laboratory use in the Administration Building.

The hot water system consists of piping, isolation valves, a Gas Water Heater designated AD-GWH-1 and a Hot Water Circulating Pump, designated AD-DPC-1 and associated controls and appurtenances located in the Mechanical Room.

The Gas Water Heater AD-GWH-1 is a vertical, packaged, gas fired, polyshield lined water heater. The gas water heater has a rated capacity of 302 gph at 80°F. temperature rise with a gas input of 270,000 btu/hr and a storage capacity of 125 gallons.

The Hot Water Circulating Pump AD-DPC-1 is a horizontal in-line all bronze hot water circulating pump. The hot water circulating pump is a 3/4 inch diameter, oil lubricated pump with a 115 volt, 1/12 hp motor. The hot water circulating pump is controlled by an adjustable aquastat thermostat in the hot water return piping set to maintain a recirculation temperature of 120 degrees F.

H. HEATING, VENTILATING AND AIR CONDITIONING EQUIPMENT

(1) DESCRIPTION

The heating, ventilating and air conditioning (HVAC) equipment is provided to heat, cool and ventilate the Administration Building. Refer to Figures III-AD-AB-2, 3 and 4 for schematic diagrams of the heating, ventilating and air conditioning systems.

Heating, ventilating and air conditioning equipment in the Administration Building includes:

a. CHILLER: AD-CLC-1, CONDENSER WATER PUMP: AD-CWP-1 AND CHILLED WATER PUMPS: AD-CPP-1A AND 1B

The chiller is provided to automatically supply chilled water to cool the building. The condenser water pump is provided to circulate effluent water through the condenser coils. The chilled water pumps are provided to circulate chilled water through the chiller and throughout the building. Chiller AD-CLC-1, Condenser Water Pump AD-CWP-1 and Chilled Water Pumps AD-CPP-1A and 1B are located in the Mechanical Room on the ground floor.

The chiller is a packaged centrifugal liquid chiller unit that consists of a compressor, 200 hp squirrel cage induction motor, evaporator, condenser, capacity control, purge unit, lubrication systems coated flow sensors and microprocessor control system. The chiller utilizes effluent water as the cooling medium.

The chiller has a cooling capacity of 200 tons at a rated evaporator capacity of 500 gpm at 17 ft pressure drop and a condenser capacity of 600 gpm at 20 ft pressure drop.

The packaged chiller is provided with a unit mounted control and alarm panel and remote mounted starter. The control panel at the chiller is provided with the following:

- LOCAL-REMOTE Selector switch
- Compressor sequencing controls
- Non recycling pump down control relays
- Control power transformer
- Low and high pressure safety cutout relays
- Oil pressure safety switch
- Freeze protection controls
- Chilled water temperature controller

The following devices in the alarm panel at the chiller require manual reset and cause an alarm indication:

- Motor over-current
- Over voltage
- Under voltage
- Bearing high temperature
- High condenser pressure

- High motor temperature
- High compressor discharge temperature
- Low oil pressure
- High oil temperature
- Low cooling water flow
- High cooling water temperature

A solid state reduced voltage starter with lockable disconnect switch is remote mounted adjacent to the chiller.

The condenser water pump is a horizontal split case double suction centrifugal water pump driven by a 10 HP constant speed motor. The pump has a rated capacity of 600 gpm at a rated head of 40 feet, at a pump speed of 1,750 rpm.

Each chilled water pump is a vertical in-line centrifugal water pump driven by a 7 ½ HP vertical constant speed motor. Each pump has a rated capacity of 500 gpm at a rated head of 40 feet, at a pump speed of 1,750 rpm.

The condenser water pump and the chilled water pumps are operated from MCC-91 and are remotely controlled by contacts in Temperature Control Panel AD-TCP-2. Each pump is provided with an ON-OFF switch with locking device for the OFF position and TEST push button at the unit.

b. HEATING BOILER: AD-WHB-1 AND HOT WATER CIRCULATING PUMPS: AD-HPP-1A, 1B, 2A AND 2B

The heating boiler is provided to automatically supply hot water for heating the Administration Building. The hot water circulating pumps are provided to circulate hot water throughout the building. The heating boiler and hot water circulating pumps are located in the Mechanical Room.

The heating boiler is a packaged bent water tube, gas fired unit with relief valves, flue gas thermometers, water temperature gauge, temperature controller, low water cutoff control and appurtenances.

The heating boiler has a rated capacity of 1,760 mbh (52 hp) at a maximum temperature of 250°F and 125 psig. The gas fired burner has a rated capacity of 2,200 scfh natural gas.

The heating boiler is provided with a unit mounted control panel. The heating boiler control panel contains a power ON-OFF switch, a MANUAL-AUTO selector switch and potentiometer to control the rate for firing. Indication lights and audible alarm are provided for low water shutdown, high or low gas pressure shutdown, ignition failure shutdown, load demand and natural gas valve open indication.

Hot water circulating pumps AD-HPP-1A and 1B and AD-HPP-2A and 2B are vertical in-line centrifugal water pumps driven by 1 hp and 3 hp vertical constant speed motors, respectively.

Hot water circulating pumps AD-HPP-1A and 1B each have a rated capacity of 40 gpm at a rated head of 40 feet, at a pump speed of 1,750 rpm. Hot water pumps AD-HPP-2A and 2B each have a rated capacity of 140 gpm at a rated head of 40 feet, at a pump speed of 1,750 rpm.

The hot water circulating pumps are operated from MCC-91 and are remotely controlled by contacts in Temperature Control Panel AD-TCP-2. Each pump is provided with an ON-OFF switch with a locking device for the OFF position and a TEST push button at the unit.

c. AIR HANDLING UNIT: AD-ACU-1

The air handling unit is provided to heat, cool and ventilate the office areas of the Administration Building.

The air handling unit is a packaged factory assembled unit with an in-line centrifugal fan, 15 hp constant speed motor, filters, mixing boxes, dampers, heating and cooling coils and appurtenances. Supply and return bars are equipped with motor operated inlet vanes to vary air flow in accordance with space cooling loads.

The air handling unit has a rated capacity of 11,300 cfm at a static pressure of 3.5 in., at a fan speed of 878 rpm. The cooling coils have a rated capacity of 522 mbh at a chilled water flow of 100 gpm and an air flow of 11,300 cfm. The heating coils have a rated capacity of 265 mbh at a hot water flow of 14 gpm and an air flow of 5,000 cfm.

The air handling unit is operated from MCC-91A and is remotely controlled by contacts in Temperature Control Panel AD-TCP-1. The air handling unit is provided with an ON-OFF switch with a locking device for the OFF position and a TEST push button at the unit.

d. AIR HANDLING UNIT: AD-ACU-2

The air handling unit is provided to heat, cool and ventilate the main laboratory area of the Administration Building.

The air handling unit is a packaged factory assembled unit with an in-line centrifugal fan, 25 hp constant speed motor, filters, mixing boxes, dampers, heating and cooling coils and appurtenances.

The air handling unit has a rated capacity of 14,740 cfm at a static pressure of 4.0 in., at a fan speed of 835 rpm. The cooling coils have a rated capacity of 903 mbh at a chilled water flow of 115 gpm and an air flow of 14,740 cfm. The heating coils have a rated capacity of 682 mbh at a hot water flow of 66 gpm and an air flow of 14,740 cfm.

The air handling unit is operated from MCC-91A and is remotely controlled by contacts in Temperature Control Panel AD-TCP-1. The air handling unit is provided with an ON-OFF switch with a locking device for the OFF position and a TEST push button at the unit.

e. AIR HANDLING UNIT: AD-ACU-3

The air handling unit is provided to heat, cool and ventilate the Industrial Waste and Bay Studies Laboratory area of the Administration Building.

The air handling unit is a packaged factory assembled unit with an in-line centrifugal fan, 15 hp constant speed motor, filters, mixing boxes, dampers, heating and cooling coils and appurtenances.

The air handling unit has a rated capacity of 10,540 cfm at a static pressure of 3.5 in., at a fan speed of 873 rpm. The cooling coils have a rated capacity of 514 mbh at a chilled water flow of 92 gpm and an air flow of 10,540 cfm. The heating coils have a rated capacity of 392 mbh at a hot water flow of 27 gpm and an air flow of 10,540 cfm.

The air handling unit is operated from MCC-91A and is remotely controlled by contacts in Temperature Control Panel AD-TCP-1. The air handling unit is provided with an ON-OFF switch with a locking device for the OFF position and a TEST push button at the unit.

f. AIR HANDLING UNIT: AD-ACU-4

The air handling unit is provided to heat, cool and ventilate the fume hood system of the Administration Building.

The air handling unit is a packaged factory assembled unit with an in-line centrifugal fan, 10 hp constant speed motor, filters, mixing boxes, dampers, heating and cooling coils and appurtenances.

The air handling unit has a rated capacity of 11,200 cfm at a static pressure of 2.1 in., at a fan speed of 722 rpm. The cooling coils have a rated capacity of 572 mbh at a chilled water flow of 60 gpm and an air flow of 11,200 cfm. The heating coils have a rated capacity of 490 mbh at a hot water flow of 48 gpm and an air flow of 11,200 cfm.

The air handling unit is operated from MCC-91A and is remotely controlled by contacts in Temperature Control Panel AD-TCP-1. The air handling unit is provided with an ON-OFF switch with a locking device for the OFF position and a TEST push button at the unit.

g. CHILLED WATER BOOSTER PUMPS: AD-CBP-1,2,3 AND 4

Chilled Water Booster Pumps AD-CBP-1,2,3, and 4 are provided to circulate chilled water through the cooling coils of Air Handling Units AD-ACU-1,2,3 and 4, respectively.

Each chilled water booster pump is a single stage in-line centrifugal pump. Chilled Water Booster Pumps AD-CBP-1,3 and 4 are driven by 1½ hp constant speed motors. Chilled Water Booster Pump AD-CBP-2 is driven by a 2 hp constant speed motor.

Chilled Water Booster Pump AD-CBP-1 has a rated capacity of 100 gpm at 15 feet TDH, at a pump speed of 1750 rpm. Chilled Water Booster Pump AD-CBP-2 has a rated capacity of 208 gpm at 20 feet TDH, at a pump speed of 1750 rpm. Chilled Water Booster Pump AD-CBP-3 has a rated capacity of 103 gpm at 15 feet TDH, at a pump speed of 1750 rpm. Chilled Water Booster Pump AD-CBP-4 has a rated capacity of 114 gpm at 15 feet TDH, at a pump speed of 1750 rpm.

The chilled water booster pumps are operated from MCC-91A and are remotely controlled by contacts in Temperature Control Panel AD-TCP-1. Each chilled water booster pump is provided with an ON-OFF switch with a locking device for the OFF position and a TEST push button at the unit.

h. EXHAUST AIR FANS

Exhaust air fans are provided to exhaust air from the building. The location, area served, type, capacity, speed, and motor size for each exhaust fan is as follows:

EXHAUST FANS						
UNIT NO.	LOCATION	AREA SERVED	TYPE	CFM	RPM	HP
AD-EAF-1	PENTHOUSE	OFF. 137, 138, 140 & 141	CENTRIFUGAL	2080	1274	3/4
AD-EAF-2	PENTHOUSE	MENS TOILET 110 WOMENS TOILET 111 LOCKER 112	CENTRIFUGAL	1300	977	½
AD-EAF-3	PENTHOUSE	MAIN LABORATORY LABS 123, 124, 135, 149, 157	CENTRIFUGAL	2760	1579	1
AD-EAF-4	PENTHOUSE	IW/BAY LABORA-TORIES LABS 132, 133, 139 140, 146, 153,160	CENTRIFUGAL	3270	1820	1-1/2
AD-EAF-5	PENTHOUSE	MAIN LABORATORY ROOMS 163, 164, 165	CENTRIFUGAL	2840	1651	1
AD-EAF-6	PENTHOUSE	FLAMMABLE/ACID STORAGE 161	CENTRIFUGAL	420	832	1/4

EXHAUST FANS						
UNIT NO.	LOCATION	AREA SERVED	TYPE	CFM	RPM	HP
AD-EAF-7	PENTHOUSE	IW/BAY LABORATORIES ROOMS 143, 144, 145 & 147	CENTRIFUGAL	1520	1319	1/3
AD-EAF-8	KITCHEN 130	KITCHEN 130	CENTRIFUGAL	300	589	1/4
AD-EAF-9	PENTHOUSE	GC PREP ROOM 123 FUME HOOD	CENTRIFUGAL	1000	795	1/3
AD-EAF-10	PENTHOUSE	GC PREP ROOM 123 FUME HOOD	CENTRIFUGAL	1000	795	1/3
AD-EAF-11	PENTHOUSE	GC PREP ROOM 136 FUME HOOD	CENTRIFUGAL	1000	1267	½
AD-EAF-12	PENTHOUSE	GC PREP ROOM 123 FUME HOOD	CENTRIFUGAL	1000	795	1/3
AD-EAF-13	PENTHOUSE	BAY STUDY LAB 133 FUME HOOD	CENTRIFUGAL	1400	1114	3/4
AD-EAF-14	PENTHOUSE	GC PREP ROOM 123 FUME HOOD	CENTRIFUGAL	1000	1147	½
AD-EAF-15	PENTHOUSE	MAIN LAB ROOM 136 FUME HOOD	CENTRIFUGAL	1000	1147	½
AD-EAF-16	PENTHOUSE	MAIN LAB A.A.149 FUME HOOD	CENTRIFUGAL	1000	745	1/4
AD-EAF-17	PENTHOUSE	BAY STUDY LAB 133 FUME HOOD	CENTRIFUGAL	1000	745	1/4
AD-EAF-18	PENTHOUSE	INSTRUMENT ROOM 140 FUME HOOD	CENTRIFUGAL	1000	745	1/4

EXHAUST FANS						
UNIT NO.	LOCATION	AREA SERVED	TYPE	CFM	RPM	HP
AD-EAF-19	PENTHOUSE	MAIN LAB 136 FUME HOOD	CENTRIFUGAL	1000	795	1/3
AD-EAF-20	PENTHOUSE	BAY STUDY LAB 133 FUME HOOD	CENTRIFUGAL	800	1115	1/3
AD-EAF-21	PENTHOUSE	MAIN LAB 136 FUME HOOD	CENTRIFUGAL	1000	745	1/3
AD-EAF-22	PENTHOUSE	MAIN LAB 136 FUME HOOD	CENTRIFUGAL	1000	745	1/4
AD-EAF-23	PENTHOUSE	TOC/TOX 157 FUME HOOD	CENTRIFUGAL	1000	745	1/4
AD-EAF-24	PENTHOUSE	IND. WASTE LAB 153 FUME HOOD	CENTRIFUGAL	1000	745	1/4
AD-EAF-25	PENTHOUSE	MAIN LAB 136 FUME HOOD	CENTRIFUGAL	1000	1147	½
AD-EAF-26	PENTHOUSE ROOF	PENTHOUSE	CENTRIFUGAL	2200	673	1/4
AD-EAF-27	PENTHOUSE ROOF	PENTHOUSE	CENTRIFUGAL	2200	673	1/4
AD-EAF-28	ELEVATOR MACHINE ROOM	ELEVATOR MACHINE ROOM	PROPELLER	600	1550	1/20
AD-EAF-29	MECHANI-CAL ROOM	MECHANICAL ROOM	PROPELLER	1550	1725	1/4
AD-EAF-30	BOAT STORAGE ROOF	BOAT STORAGE	CENTRIFUGAL	1100	934	1/4
AD-EAF-31	TRANS-FORMER VAULT WALL	TRANSFORMER VAULT	PROPELLER	1800	1725	1/4
AD-EAF-32	TRANS-FORMER VAULT WALL	TRANSFORMER VAULT	PROPELLER	600	1042	1/4

EXHAUST FANS						
UNIT NO.	LOCATION	AREA SERVED	TYPE	CFM	RPM	HP
AD-EAF-33	PENTHOUSE	MICROSCOPE ROOM 132 FUME EXTRACTOR	CENTRIFUGAL	600	1042	1/4
AD-EAF-34	PENTHOUSE	GC/HPLC ROOM 135 FUTURE FUME EXTRACTOR	CENTRIFUGAL	300	824	1/4
AD-EAF-35	PENTHOUSE	A.A. ROOM 149 FUME EXTRACTOR	CENTRIFUGAL	600	1042	1/4
AD-EAF-36	PENTHOUSE	GC/MS ROOM 124 FUTURE FUME EXTRACTOR	CENTRIFUGAL	300	824	1/4
AD-EAF-37	PENTHOUSE	TOC/TOX ROOM 157 FUTURE FUME EXTRACTOR	CENTRIFUGAL	300	824	1/4

Exhaust Fans AD-EAF-1, 2, 3, 4, 5, 6, 9, 10, 11, 12, 13, 14, 15, 16, 17, 18, 19, 20, 21, 22, 23, 24 and 25 are operated from MCC 91A and are remotely controlled by contacts in Temperature Control Panel AD-TCP-1. Each exhaust fan is provided with an ON-OFF switch with a locking device for the OFF position and a TEST push button at the unit.

Exhaust Fans AD-EAF-7, 26, 27, 33, 34, 35, 36 and 37 are operated from Temperature Control Panel AD-TCP-1. Each Exhaust Fan is provided with and ON-OFF switch with a locking device for the OFF position at the unit.

Exhaust Fan AD-EAF-8, is operated from LP-91A and a wall switch in the kitchen.

Exhaust Fans AD-EAF-28, 29, 30, 31 and 32 are operated from Temperature Control Panel AD-TCP-2. Each exhaust fan is provided with and ON-OFF switch with a locking device for the OFF position at the unit.

i. RETURN EXHAUST FANS: AD-REF-1 and 2

Return exhaust fans are provided to exhaust air from the offices in the Administration Building. The exhausted air may be exhausted through the relief air plenum or recirculated through the air handling unit to condition air for the space served. Return Exhaust Fan AD-REF-1 serves the administration office area and Return Exhaust Fan AD-REF-2 serves the Bay Study and Industrial Waste office areas.

Return Exhaust Fan AD-REF-1 is an in-line centrifugal fan with a 5 hp constant speed motor, variable air volume controller and appurtenances. Return Exhaust Fan AD-REF-2 is an in-line centrifugal fan with a 3 hp constant speed motor, variable air volume controller appurtenances.

Return Exhaust Fan AD-REF-1 is rated at a capacity of 9450 cfm at a static pressure of 1.5 inches, at a fan speed of 1196 rpm. Return Exhaust Fan AD-REF-2 is rated at a capacity of 5600 cfm at a static pressure of 1.5 inches, at a fan speed of 1354 rpm.

Return Exhaust Fans AD-REF-1 and 2 are operated from MCC-91A and are remotely controlled by contacts in Temperature Control Panel AD-TCP-1. Each return exhaust fan is provided with and ON-OFF switch with a locking device for the OFF position and a TEST push button at the unit.

j. UNIT HEATERS: AD-WUH-1, 2, 3, 4 AND 5

The hot water unit heaters are provided to heat rooms that are not air conditioned. Unit Heater AD-WUH-1 provides heat for the Elevator Machine Room. Unit Heaters AD-WUH-2 and 3 provide heat for the Mechanical Room. Unit Heaters AD-WUH-4 and 5 provide heat for the Boat Storage.

Each hot water unit heater consist of heating coils, fan, constant speed 1/47 hp motor and appurtenances.

Each hot water unit heater has a rating of 580 cfm at a fan speed of 1550 rpm. Unit Heater AD-WUH-1 has an output of 12,000 btu/hr at a hot water flow of 1.2 gpm. Unit Heaters AD-WUH-2 and 3 each have an output of 13,000 btu/hr at a hot water flow of 1.3 gpm. Unit Heaters AD-WUH-4 and 5 each have an output of 14,000 btu/hr at a hot water flow of 1.4 gpm.

The unit heaters are operated from LP-91A and are controlled by room thermostats.

k. FAN COIL COOLING UNITS: AD-FCU-1, 2, 3 and 4

The fan coil cooling units are provided to supplement cooling of air conditioned air and to provide cooling for certain areas when the main air conditioning system is not in use. Fan Coil Cooling Units AD-FCU-1 and 2 provide cooling for the Electrical Room. Fan Coil Cooling Unit AD-FCU-3 provides cooling for the Culture Room. Fan Coil Cooling Unit AD-FCU-4 provides cooling for Corridor 004.

Fan Coil Cooling Units AD-FCU-1 and 2 each consist of cooling coils, four fans, two constant speed motors and appurtenances. Fan Coil Cooling Units AD-FCU-3 and 4 each consist of cooling coils, a fan, a constant speed motor and appurtenances.

Fan Coil Cooling Units AD-FCU-1 and 2 each has a rating of 1200 cfm and an output of 25,000 btu/hr at a chilled water flow of 3.3 gpm. Fan Coil Cooling Units AD-FCU-3 and 4 each has a rating of 200 cfm and an output of 2500 btu/hr at a chilled water flow of 0.3 gpm.

The fan coil cooling units are operated from LP-91A and are controlled by room thermostats.

l. PACKAGED AIR CONDITIONING UNIT: AD-PUC-1

The packaged air conditioning unit is provided to cool and dehumidify the computer room.

The packaged air conditioning unit consists of a split refrigeration system with evaporator and water cooled condenser sections, compressor, fan, 2 speed ½ hp motor and controls. The packaged air conditioning unit utilizes effluent water as the cooling medium for the condenser coils.

The packaged air conditioning unit has a rating of 32,200 btu/hr at an air flow of 1250 cfm and a static pressure of 0.3 inches on high speed and 30,500 btu/hr at an air flow of 965 cfm and a static pressure of 0.3 inches on low speed. The unit requires a cooling water flow of 8.8 gpm at 95°F.

The packaged air conditioning unit is operated from LP-91A. The packaged air conditioning unit has wall mounted controls consisting of a ON-OFF switch, a seven-day programmable thermostat-humidistat and a HIGH SPEED - LOW SPEED fan selector switch. Interlocked with the ON-OFF switch is a three way mixing valve to control consensor water supply to the unit.

m. AIR PURIFICATION UNIT: AD-APU-1

The air purification unit is provided to remove odorous, irritating and corrosive gases and 90 percent of all particles exceeding 1 micron in size from the air of the computer room.

The air purification unit consist of multiple banks of chemisorbant media, filters, circulation fan and 1 hp constant speed motor. The air purification unit has a rated capacity of 500 cfm.

The air purification unit is operated from LP-91A.

n. TEMPERATURE AIR COMPRESSOR EQUIPMENT: AD-TAC-1A AND 1B

The temperature air compressor equipment is provided to supply dry air for pneumatic control for the HVAC system. The temperature air compressor equipment is located in the Mechanical Room and includes piping and fittings, valves, two packaged air compressors and a refrigerated air dryer.

The packaged air compressor system consists of inlet air filter silencers, two air compressors, a 200 gallon air receiver, electrical controls and appurtenances. The air compressors are single-stage, air cooled reciprocating piston type compressors driven by constant speed 5 hp motors through V-belt drives.

Each air compressor delivers 21.5 cfm of air at 90 psig. The air dryer is a refrigeration type air dryer rated at 35 cfm.

The Temperature air compressors are operated from MCC-91 and are controlled by an alternator and pressure switches in the control panel at the unit.

(2) NORMAL OPERATION

a. CHILLER: AD-CLC-1, CONDENSER WATER PUMP: AD-CWP-1 AND CHILLED WATER PUMPS: AD-CPP-1A AND 1B

Under normal operation the LOCAL-REMOTE selector switch on the chiller control panel is in the REMOTE position and the chiller is controlled remotely by contacts in Temperature Control Panel AD-TCP-2.

Under normal operation the chiller, condenser water pump and chilled water pumps operate when outside air temperature is above 55°F or Air Handling Units AD-ACU-1,2,3 or 4 cooling coil valves are sent a signal from Temperature Control Panel AD-TCP-2 as follows:

- Condenser Water Pump AD-CWP-1 starts and the condenser water control valve modulates to provide condenser water to the chiller at 85°F.

- Chilled Water Pump AD-CCP-1A or 1B starts after the condenser water temperature is satisfied. Chilled Water Pumps AD-CCP-1A and 1B alternate operation. If the lead pump fails to show flow after and adjustable time delay (5 to 60 seconds), the lag pump starts and a visual and audible alarm is generated at AD-TCP-2.

- The chiller starts 60 seconds (adjustable 30 to 360 seconds) after the chilled water pump starts and if the chilled water return temperature is within manufacturer's limits.

- The chiller will stop when the air handling units are not calling for cooling or the outside air temperature is below 53°F.

- The chiller will also stop through its own safeties. When the chiller is stopped by its own safeties an alarm is generated at AD-TCP-2.

- The chilled water supply/return temperature differential controls the chilled water temperature set point. When the differential is 10 degrees the set point is 44°F. When the differential is 2 degrees the set point is 50°F. If the cooling water valve is calling for more than 80 percent of full design flow, the chilled water set point will be automatically adjusted downward.

When the LOCAL-REMOTE selector switch is in the LOCAL position the chiller operates at a chilled water set point of 44°F.

b. HEATING BOILER: AD-WHB-1 AND HOT WATER CIRCULATING PUMPS: AD-HPP-1A, 1B, 2A AND 2B

Under normal operation the heating boiler is controlled remotely by Temperature Control Panel AD-TCP-2. The heating boiler runs whenever the outside air temperature is below 70°F or any Air

Handling Unit is dehumidifying. When the boiler starts the combustion air intake damper and the mechanical room outside air intake damper open. When the boiler control panel REMOTE-LOCAL selector switch is in the LOCAL position the boiler control panel at the unit shall control the temperature of hot water supply. When the REMOTE-LOCAL selector switch is in the REMOTE position the hot water supply temperature is based on outside temperature as follows.

Outdoor Temperature Degrees	HWS Temperature Degrees
25	190
30	190
55	165
80	140
90	140

Under normal operation the lead reheat pump (Hot Water Circulating Pump AD-HPP-1A or 1B) will start when the outdoor temperature falls below 70°F. or when any air handling unit is dehumidifying. If the lead pump fails to show flow after a 60 second adjustable time delay, the lag pump will start and visual and audible alarms will be initiated by AD-TCP-2.

Under normal operation the lead heating coil pump (Hot Water Circulating Pump AD-HPP-2A or 2B) will start when the outdoor temperature falls below 50°F. If the lead pump fails to show flow after a 60 second adjustable time delay, the lag pump will start and visual and audible alarms will be initiated by AD-TCP-2.

c. AIR HANDLING UNIT: AD-ACU-1

Under normal operation the HAND-OFF-AUTO selector switch in Temperature Control Panel AD-TCP-1 is in the AUTO position. In the AUTO position the fan is controlled by the DDC system start program. A low temperature protection thermostat downstream of the heating coils will stop the fan if the temperature is below 38°F. Smoke detectors in the supply and return ducts will alarm and shutdown the supply fan when smoke is detected. Fans AD-REF-1 and AD-EAF-2 (Occupied Mode Only) are interlocked with the operation of the supply fan.

Operating Modes controlled by the Direct Digital Control (DDC) System and auxiliary equipment operation associated with Air Handling Unit AD-ACU-1 are as follows:

- Damper Control
  - When AD-ACU-1 is off or in the unoccupied mode, the outdoor air dampers and the exhaust air dampers close and the return air damper opens.
  - When AD-ACU-1 is on in the occupied mode, the minimum outdoor air damper opens to a preset minimum position.

- Low Temperature Protection
  - If either the mixed air or discharge air temperature sensors sense a temperature below 43°F. The control of dampers will be overridden to maintain this low limit temperature.

  - If either the mixed air or discharge air temperature sensors sense a temperature below 40°F or the outside temperature is below 35°F, the Chilled Water Booster Pump AD-CBP-1 will start, the lead Chilled Water Pump AD-CPP-1A or 1B will start the cooling coil valve will fully open and an audible and visual alarm will be generated at AD-TCP-1.

- Temperature Control - Unoccupied Mode
  - The supply fan will be off unless any of the unoccupied mode space temperature sensors sense a temperature above or below unoccupied cooling or heating set points.

  - When any of the space temperature sensors sense a temperature below 65°F, AD-ACU-1 will start and run until all temperature sensors sense a temperature above 70°F. When run in this mode, the unit's outdoor damper remains closed.

  - When AD-ACU-1 is started due to a low temperature condition, a signal is sent to start the lead hot water circulating pump and to start the hot water boiler.

  - When any of the space temperature sensors sense a temperature sensors sense a temperature above 80°F, AD-ACU-1 will start and run until all temperature sensors sense a temperature below 76°F.

  - When AD-ACU-1 is started due to a high temperature condition the heating coil, cooling coil and cooling coil pump operate the same as described for Temperature Control-Occupied Mode.

  - An optimal start program measures the time remaining until the occupied mode is to start and the deviation from the occupied temperature set point. AD-ACU-1 will be started sufficiently in advance of the start of the occupied mode to warm or cool the space as required.

- Damper Economizer Control - Occupied Mode
  - When the outdoor air temperature is above 70°F the maximum outdoor return and exhaust air dampers return to their normal positions. An adjustable time delay or 2 degree dead band is provided in this sequence.

- Heating Temperature Control - Occupied Mode

- The discharge air temperature set point from the unit is adjustable. The default set point is 63°F.

- The discharge air temperature set point resets upward whenever the return air temperature drops below 70°F. The set point is 60°F at 72°F return air temperature and 66°F at 70°F return air temperature.

- On a continued fall in mixed air temperature below the discharge air set point the maximum outdoor and exhaust air dampers modulate closed and the return air damper modulates open.

- On a continued fall in discharge air temperature below its set point the heating coil valve will modulate open to the heating coil.

- There is be an adjustable offset between the damper and heating valve sequences.

- On a continued rise in temperature back to set point the above sequences reverse.

• Cooling Temperature Control - Occupied Mode
  - On a rise in mixed air temperature above the discharge air set point the maximum outdoor and exhaust air dampers modulate open and the return air damper modulates closed.

  - On a continued rise in discharge air temperature above the discharge air temperature set point the cooling coil valve will modulate open to the cooling coil.

  - There is an adjustable offset between the damper and cooling valve sequences.

  - On a fall in temperature back to set point the above sequences reverse.

• Chilled Water Booster Pump AD-CBP-1 Control
  - Whenever outside temperature is above 55°F the pump will start.

  - If the pump has been commanded to start and there is no flow, visual and audible indication of the specific alarm is initiated at AD-TCP-1.

• Supply and Return CFM Control
  - Signals from CFM measuring stations in the supply and return air ducts are compared and the resulting signal used to control the return fan inlet vanes.

  - The return fan CFM control set point equals: (Supply CFM) - (AD-EAF-2 CFM) - (Pressurization CFM, 500 CFM).

- When AD-EAF-2 is off, the return fan CFM set point is set to the supply CFM-Pressurization CFM (typical for unoccupied mode operation).

- CFM values and set points are displayed and easily adjustable at the DDC temperature control panel TCP-1.

- Supply Static Control
  - The lower of two static pressure sensor signals controls the supply fan inlet dampers to maintain 0.75 inches w.c., adjustable.

  - Static pressure values and set point are displayed and easily adjustable at the DDC.

- Air Terminal Unit (ATU), Space Variable Air Volume and Temperature Control (AD-ACU-1)
  - On a rise in space temperature above the cooling set point as sensed by a room thermostat, the supply air flow through the air terminal unit (ATU) CFM set point modulates up until the preset maximum CFM setting is reached. On a fall in temperature down to the cooling set point, the ATU CFM set point modulates down to the preset minimum CFM.

  - On a fall in space temperature below the heating set point as sensed by the same room thermostat, the three-way reheat coil valve modulates open to the reheat coil and the ATU CFM set point modulates up until the preset maximum CFM setting is reached. On a rise in temperature up to the heating set point, the ATU CFM set point modulates down to the preset minimum CFM and the reheat coil valve modulates closed to the preheat coil.

  - The heating set point (72°F), the cooling set point (76°F), the preset CFM maximum and minimums (as scheduled on Drawings), the heating throttling range (2°) and the cooling throttling range (2°) are individually adjustable at the thermostat.

d. AIR HANDLING UNIT: AD-ACU-2

Under normal operation the HAND-OFF-AUTO selector switch on Temperature Control Panel AD-TCP-1 is in the AUTO position. In the AUTO position the fan is controlled by the DDC system start program. A low temperature protection thermostat downstream of the heating coils will stop the fan if the temperature is below 38°F. Smoke detectors in the supply duct and in Exhaust Fans AD-EAF-1, 3 and 5 will alarm and shutdown the supply fan when smoke is detected. Fans AD-EAF-1, 3, 5, 6, 11, 15, 19, 21, 22 and 25 are interlocked with the operation of the supply fan. If the supply fan suction exceeds 3.0 inches w.c. the fan stops. The supply fan will not start until the outside air damper is at least 75 percent open.

Operating modes controlled by the Direct Digital Control (DDC) System and auxiliary equipment operation associated with Air Handling Unit AD-ACU-2 are as follows:

•Damper Control

- When AD-ACU-2 is off, the outdoor air damper will close. The damper closing is delayed by 30 seconds (10-60 seconds, adjustable).

- When AD-ACU-2 runs in the Occupied mode, the outdoor air damper opens.

• Low Temperature Protection

- If either the preheat leaving or discharge air temperature sensor senses a temperature below 43°F, the control of the preheat coil shall be overridden to maintain this low limit temperature.

- If either the preheat leaving or discharge air temperature sensors sense a temperature below 40°F or the outside temperature is below 35°F pump AD-CBP-2 will start, the lead pump of AD-CCP-1A and 1B will start, the cooling coil valve will open wide to the cooling coil, and audible and visual alarms will be initiated at AD-TCP-1.

• Heating Temperature Control

- The discharge air temperature set point from the unit is adjustable. The default set point is 62°F.

- The discharge air temperature set point resets upward whenever the average AD-EAF-1 and 3 air temperature drops below 72°F. The set point is adjusted upwards to maintain average exhaust air temperature at 72°F.

- On a fall in discharge air temperature below its set point the heating coil valve modulates open to the heating coil.

- On a rise in temperature back to set point the above sequences reverse.

• Cooling Temperature Control

- On a rise in discharge air temperature above the discharge air temperature set point the cooling coil valve modulates open to the cooling coil.

- On a rise in average exhaust air temperature above 76°F the discharge air set point resets downward to maintain the average temperature at 76°F.

- On a rise in average AD-EAF-1 and 3 relative humidity above 58 percent the discharge air set point resets downward to maintain average exhaust relative humidity at a 60 percent upper limit.

- When dehumidification is not required (average exhaust humidity less than 55 percent) the discharge air temperature set point resets to maintain an average exhaust air temperature of 74°F.

- Chilled Water Booster Pump AD-CBP-2 Control
  - Whenever outside temperature is above 55°F the pump starts.
  - If the pump has been commanded to start and there is no flow, visual and audible indication of the specific alarm will be initiated at AD-TCP-1.

- CFM Control - Occupied Mode
  - The inlet vanes in the AD-ACU-2 supply fan are controlled to maintain 14,000 CFM, adjustable.
  - Air Terminal Units are controlled by CFM to maintain the following exhaust fan airflows:

AD-EAF-1:	2080 CFM	(AD-ATU-35)
AD-EAF-3:	2760 CFM	(AD-ATU-36)
AD-EAF-5:	2840 CFM	(AD-ATU-38)

  - The following exhaust fans will run: AD-EAF-11, 15, 19, 21, 22 and 25. If any of these fans fail to operate as proved by airflow, audible and visual indication will be initiated at AD-TCP-1 and instruction to manually reduce the supply fan CFM set point is issued.

- CFM Control - Unoccupied Mode
  - The inlet vanes in the AD-ACU-2 supply fan are controlled to maintain 7,000 CFM, adjustable.
  - Air Terminal Units are controlled by CFM measurement in each exhaust duct to maintain the following exhaust fan airflows:

AD-EAF-1:	1,000 CFM	(AD-ATU-35)
AD-EAF-3:	1,400 CFM	(AD-ATU-36)
AD-EAF-5:	1,400 CFM	(AD-ATU-38)

  - Any three of the following exhaust fans will run: AD-EAF-11, 15, 19, 21, 22 or 25.
  - The three fans selected for operation during this mode are easily operator selectable. A lead/lag sequence is also easily selectable.

- If any of the lead fans fail to operate as proved by airflow, the next lag fan in sequence will start and audible and visual indication will be initiated at AD-TCP-1.

- Reheat Coil Control
  - On a fall in space temperature below the space thermostat's heating set point (72°F) the three-way reheat valve modulates open to the reheat coil. On a rise in temperature, the sequence will reverse.

e. AIR HANDLING UNIT: AD-ACU-3

Under normal operation the HAND-OFF-AUTO selector switch on Temperature Control Panel AD-TCP-1 is in the AUTO position. In the AUTO position the fan is controlled by the DDC system start program. A low temperature protection thermostat downstream of the heating coils will stop the fan if the temperature is below 38°F. Smoke detectors in the supply and return ducts and in Exhaust Fans AD-EAF-4 and 7 will alarm and shutdown the supply fan when smoke is detected. Fans AD-EAF-4 and 7 and AD-REF-2 are interlocked with the operation of the supply fan.

Operating modes controlled by the Direct Digital Control (DDC) System and auxiliary equipment operation associated with Air Handling Unit AD-ACU-3 are as follows:

- Damper Control
  - When AD-ACU-3 is off, the minimum and maximum outdoor air dampers and exhaust air dampers close and the return air damper opens.
  - When AD-ACU-3 runs in the Occupied mode, the minimum outdoor air damper opens to a position preset by a minimum position switch to admit 4,790 CFM.
  - When AD-ACU-3 runs in the Unoccupied mode the minimum outdoor damper opens to a position preset by a second minimum position switch to admit 1,600 CFM.

- Low Temperature Protection
  - If either the mixed air or discharge air temperature sensors sense a temperature below 43°F the control of dampers will be overridden to maintain this low limit temperature.
  - If either the mixed air or discharge air temperature sensors sense a temperature below 40°F or the outside temperature is below 35°F pump AD-CBP-3 will start, the lead pump of AD-CPP-1A and 1B will start, the cooling coil valve will open wide to the cooling coil, and audible and visual alarms will be initiated at AD-TCP-1.

- Damper Economizer Control - Occupied Mode
  - When the outdoor air temperature is above 70°F the outdoor air damper closes and the return and exhaust air dampers return to their normal positions. An adjustable time delay or 2 degree dead band is provided in this sequence.

- Heating Temperature Control
  - The discharge air temperature set point from the unit is resettable. The default set point is 62°F.
  - The discharge air temperature set point will reset upward whenever the return air temperature drops below 72°F to maintain the return air at 72°F.
  - On a fall in mixed air temperature below the discharge air set point the maximum outdoor and exhaust air dampers modulate closed and the return air damper modulates open.
  - On a continued fall in discharge air temperature below its set point the heating coil valve modulates open to the heating coil.
  - There is an adjustable offset between the damper and heating valve sequences.
- Cooling Temperature Control
  - On a rise in mixed air temperature above the discharge air set point the maximum outdoor and exhaust air dampers modulate open.
  - On a continued rise in discharge air temperature above the discharge air temperature set point the cooling coil valve modulates open to the cooling coil.
  - There is an adjustable offset between the damper and cooling valve sequences.
  - On a fall in temperature back to set point the above sequences reverse.
  - On a rise in return air temperature above 76°F the discharge air set point will reset downward to maintain the return temperature at 76°F.
  - On a rise in return air relative humidity above 58 percent, the discharge air set point resets downward to maintain average return relative humidity at a 60 percent upper limit.
  - When dehumidification is not required (return humidity less than 55 percent) the discharge air temperature set point resets to maintain an average air temperature of 75°F.
- Chilled Water Booster Pump AD-CBP-3 Control
  - Whenever outside temperature is above 55°F the pump starts.

- If the pump has been commanded to start and there is no flow, visual and audible indication of the specific alarm is initiated at AD-TCP-1.

- CFM Control - Occupied Mode
  - The inlet vanes in the AD-ACU-3 supply fan are controlled to maintain 10,540 CFM, adjustable.
  - AD-ATU-36 is controlled by exhaust CFM measurement to maintain exhaust fan AD-EAF-4 airflow of 3,270 CFM.
  - Exhaust fan AD-EAF-7 operates continuously. If either AD-EAF-4 or 7 fail to operate as proved by airflow, audible and visual indication is initiated at AD-TCP-1 and instruction to manually reduce the supply fan CFM set point is issued.
  - The return fan inlet vanes are controlled to maintain 5,700 CFM, adjustable.

- CFM Control - Unoccupied Mode
  - The inlet vanes in the AD-ACU-3 supply fan are controlled to maintain 5,500 CFM, adjustable.
  - AD-ATU-36 is controlled by exhaust CFM measurement to maintain exhaust fan AD-EAF-4 airflow of 1,600 CFM.
  - Exhaust fan AD-EAF-7 is off.
  - The return fan vortex damper is controlled to maintain 3,900 CFM, adjustable.

f. AIR HANDLING UNIT: AD-ACU-4

Under normal operation the HAND-OFF-AUTO selector switch on Temperature Control Panel AD-TCP-1 is in the AUTO position. In the AUTO position the fan will run whenever any of the following fume hood exhaust fans are on:

AD-EAF-9
AD-EAF-10
AD-EAF-12
AD-EAF-13
AD-EAF-14
AD-EAF-16
AD-EAF-17
AD-EAF-18
AD-EAF-20
AD-EAF-23
AD-EAF-24

A ten minute adjustable time delay is provided for stopping the supply fan after all exhaust fans are off. The fan is started with its bypass damper open and the outdoor supply air damper open at least 75 percent. A low temperature protection thermostat downstream of the heating coils will stop the fan if the temperature is below 38°F. Smoke detectors in the supply duct will alarm and shutdown the supply fan when smoke is detected. If the fan suction exceeds -3.0 inches w.c. or the fan discharge exceeds 3.0 inches w.c., the fan will stop.

Operating modes controlled by the Direct Digital Control (DDC) System and auxiliary equipment operation associated with Air Handling Unit AD-ACU-4 are as follows:

- Damper Control
  - When AD-ACU-4 is off, the outdoor air damper closes.
  - When AD-ACU-4 stops, the damper close signal is delayed by 30 seconds (10-60 seconds, adjustable).
- Low Temperature Protection
  - If the discharge air temperature sensor senses a temperature below 40°F or the outside temperature is below 35°F, pump AD-CBP-4 will start, the lead pump of AD-CCP-1A and 1B will start, the cooling coil valve will open wide to the cooling coil, and audible and visual alarms will be initiated at AD-TCP-1.
- Chilled Water Booster Pump AD-CBP-4 Control
  - Whenever the outside temperature is above 55°F the pump will start.
  - If the pump has been commanded to start and there is no flow, visual and audible indication of the specific alarm will be initiated at AD-TCP-1.
- Discharge Temperature Control
  - The preheat coil valve modulates to maintain 68°F degrees discharge temperature when the unit is dehumidifying and 74°F when the unit is not dehumidifying.
  - The cooling coil valve modulates to maintain 76°F discharge temperature high limit and a 65 percent discharge relative humidity high limit.
- Static Pressure and CFM Control
  - The lower of the two static pressure sensor signals controls the AD-ACU-4 inlet vanes to maintain static at .75 inches w.c., adjustable.
  - The AD-ACU-4 bypass damper will open when
    (1) Supply CFM falls below 2,500 CFM, adjustable, or;
    (2) Either static pressure sensor signal exceeds 1.5 inches w.c., adjustable, or;

(3) Fewer than 3 (adjustable) of the following exhaust fans are in operation: AD-EAF-9, 10, 12, 13, 14, 16, 17, 18, 20, 23 or 24.

- Adjustable dead bands are provided in each of the sequences listed above to avoid bypass damper short cycling.

g. CHILLED WATER BOOSTER PUMPS: AD-CBP-1, 2, 3 AND 4

Under normal operation Chilled Water Booster Pumps AD-CBP-1, 2, 3 and 4 are interlocked with the operation of Air Handling Units AD-ACU-1, 2, 3 and 4, respectively through Temperature Control Panel AD-TCP-1. The Chilled Water Booster Pumps will start whenever the outside temperature is above 55°F.

h. EXHAUST AIR FANS

Under normal operation the exhaust air fans are controlled as follows:

- Exhaust Fans AD-EAF-1, 3, 5, 6, 11, 15, 19, 21, 22 and 25 are interlocked with the controls for Air Handling Unit AD-ACU-2. See subsection "d. Air Handling Unit: AD-ACU-2" for a complete description of the interfacing of the control of the exhaust fans with Air Handling Unit AD-ACU-2.

- Exhaust Fan AD-EAF-2 is interlocked with the controls for Air Handling Unit AD-ACU-1 and operates whenever the supply fan is operating. See subsection "c. Air Handling Unit: AD-ACU-1" for a complete description of the interfacing of the control of the exhaust fan with Air Handling Unit AD-ACU-1.

- Exhaust Fans AD-EAF-4 and 7 are interlocked with the controls for Air Handling Unit AD-ACU-3. See subsection "e. Air Handling Unit AD-ACU-3" for a complete description of the interfacing of the control of the exhaust fans with Air Handling Unit AD-ACU-3.

- Exhaust Fans AD-EAF-9, 10, 11, 13, 14, 16, 17, 18, 20, 23 and 24 are fume hood exhaust fans and are interlocked with the control of Air Handling Unit AD-ACU-4. The Air Handling Unit will run whenever any of the fume hood exhaust fans are on. See subsection "f. Air Handling Unit AD-ACU-4" for a complete description of the interfacing of the control of the exhaust fans with Air Handling Unit AD-ACU-4.

- Exhaust Fan AD-EAF-8 is controlled by a wall switch in the kitchen.

- Exhaust Fans AD-EAF-26 and 27 are controlled by thermostats in the penthouse. Exhaust Fan AD-EAF-26 starts and associated outdoor fresh air intake dampers open on a rise in temperature above 85°F. Exhaust Fan AD-EAF-27 starts and associated outdoor fresh air intake dampers open on a rise in temperature above 90°F.

- Exhaust Fans AD-EAF-28, 29, 30, 31 and 32 are controlled by adjustable thermostats in the rooms they serve. Exhaust Fans AD-EAF-28, 29 and 30 will each start and the associated outdoor fresh air intake dampers open on a rise in temperature above its room thermostat set point. Exhaust Fans AD-EAF-31 and 32 will each start on a rise in temperature above its room thermostat set point.

- Exhaust Fans AD-EAF-33, 34, and 35 are controlled by START-STOP push buttons at the associated fume extractor. Each fan will start when the START button is pushed. An alarm indicating light and audible alarm are provided at the fume extractor to indicate and air flow failure.

- Exhaust Fans AD-EAF-36 and 37 are powered from Temperature Control Panel AD-TCP-1. The exhaust fans are provided for future fume extractors.

i. RETURN EXHAUST FANS: AD-REF-1 AND 2

Under normal operation Return Exhaust Fan AD-REF-1 is interlocked with Air Handling Unit AD-ACU-1 and operates whenever the supply fan is operating. See subsection "c. Air Handling Unit: AD-ACU-1" for a complete description of the interfacing of the control for the return exhaust fan and the air handling unit.

Under normal operation Return Exhaust Fan AD-REF-2 is interlocked with Air Handling Unit AD-ACU-3 and operates whenever the supply fan is operating. See subsection "e. Air Handling Unit: AD-ACU-3" for a complete description of the interfacing of the control for the return exhaust fan and the air handling unit.

j. UNIT HEATERS: AD-WUH-1, 2, 3, 4 AND 5

Under normal operation Unit Heaters AD-WUH-1, 2, 3, 4 and 5 are each controlled by space thermostats. When the space temperature drops below 68°F the unit heater fan starts.

k. FAN COIL COOLING UNITS: AD-FCU-1, 2, 3, AND 4

Under normal operation Fan Coil Cooling units AD-FCU-1, 2, 3 and 4 are each controlled by space thermostats. The fans for AD-FCU-1 and 2 each start and the cooling water control valve opens on a rise in temperature above the set point. The fans for AD-FCU-3 and 4 each start on a rise in temperature above the set point. On a continued rise in temperature for AD-FCU 3 and 4 a three way cooling water valve modulates open.

l. PACKAGED AIR CONTINUING UNIT: AD-PUC-1

Under normal operation the packaged air conditioning unit is controlled by a wall mounted controls in the Computer Room. Controls include an ON-OFF switch, a seven-day programmable thermostat and a HIGH SPEED - LOW SPEED fan selector switch. Interlocked with the ON-OFF switch is a three way mixing valve to control consensor water supply to the unit.

m. AIR PURIFICATION UNIT: AD-APU-1
Under normal operation the air purification unit fan runs continuously.

n. TEMPERATURE AIR COMPRESSOR EQUIPMENT: AD-TAC-1A AND 1B
Under normal operation the temperature air compressor equipment is controlled by a unit mounted control panel. The control panel contains an alternator and pressure switches for starting the lead and lag compressors.

(3) START-UP AND SHUTDOWN PROCEDURES

To start-up and shutdown the heating, ventilating and air conditioning equipment, use the following procedures:

a. CHILLER: AD-CLC-1, CONDENSER WATER PUMP: AD-CWP-1 AND CHILLED WATER PUMPS: AD-CPP-1A AND 1B

1. Start-Up

- Verify that manual shut off valves for effluent water supply and return are open
- Close the circuit breakers on MCC-91 for Chiller AD-CLC-1, Condenser Water Pump AD-CWP-1 and Chilled Water Pumps AD-CPP-1A and 1B
- Close the disconnect switches at Chiller AD-CLC-1
- Turn the ON-OFF switches at Condenser Water Pump AD-CWP-1 and Chilled Water Pumps AD-CPP-1A and 1B to the ON position
- Turn the LOCAL-REMOTE selector switch at Chiller AD-CLC 1 to REMOTE
- Turn the HAND-OFF-AUTO selector switches on Temperature Control Panel AD-TCP-2 for Chiller AD-CLC-1, Condenser Water Pump AD-CWP-1 and Chilled Water Pumps AD-CPP-1A and 1B to the AUTO position
- The Chiller, Condenser Water Pump and Chilled Water Pumps will start and operate in response to the conditions listed under normal operation

2. Shutdown

- The unit may be shutdown by utilizing the DDC keyboard control function or in the case of emergency or for maintenance by;
- Place the HAND-OFF-AUTO selector switches on Temperature Control Panel AD-TCP-2 to the OFF Position.

NOTE

If maintenance is to be performed on any unit open the disconnect switch at the Chiller and engage the locking device, turn the ON-OFF switches at the Condenser Water Pump and the Chilled Water Pumps to the OFF position and engage the locking device and open the circuit breaker on MCC-91. Follow approved **Lockout/Tagout** procedures (See Chapter VI, Safety).

b. HEATING BOILER: AD-WHB-1 AND HOT WATER CIRCULATING PUMPS: AD-HPP-1A, 1B, 2A AND 2B

1. Start-Up

- Verify manual shut off valves for the boiler, pumps and natural gas are open
- Close the circuit breaker for Heating Boiler AD-WHB-1 on LP-91A
- Close the circuit breakers for Hot Water Circulating Pumps AD-HPP-1A, 1B, 2A and 2B on MCC-91
- Turn the ON-OFF switch at the heating boiler control panel to the ON position
- Turn the MANUAL-AUTO selector switch at the heating boiler control panel to the AUTO position
- Turn the ON-OFF switches at the Hot Water Circulating Pumps to the ON position
- Turn the HAND-OFF AUTO selector switches on Temperature Control Panel AD-TCP-2 for the Hot Water Circulating Pumps to the AUTO position
- The Heating Boiler and Hot Water Circulating Pumps will start and operate in response to the conditions listed under normal operation

2. Shutdown

- The unit may be shutdown by utilizing the DDC keyboard control function or in the case of emergency or for maintenance by;
- Place the HAND-OFF-AUTO selector switches on Temperature Control Panel AD-TCP-2 for the Hot Water Circulating Pumps to the OFF position and turn the ON-OFF switch at the Heating Boiler to the OFF position.

NOTE

If maintenance is to be performed turn the ON-OFF switch at the Heating Boiler to the OFF position, turn the ON-OFF switches at the Hot Water Circulating Pumps to the OFF position and engage the locking device and open the circuit breakers on MCC 91 for the Hot Water Circulating Pumps and on LP-91A for the Heating Boiler. Follow approved **Lockout/Tagout** procedures (See Chapter VI, Safety).

c. AIR HANDLING UNIT: AD-ACU-1

1. Start-Up

- Close the circuit breaker on MCC-91A for Air Handling Unit AD-ACU-1
- Verify the ON-OFF switch at the unit is in the ON position
- Verify that fans AD-REF-1 and AD-EAF-2 are operational
- Turn the HAND-OFF-AUTO selector switch on Temperature Control Panel AD-TCP-1 to the AUTO position
- The supply fan will start in response to the DDC system and other controls as described under normal operation

2. Shutdown

- The unit may be shutdown by utilizing the DDC keyboard control function or in the case of emergency or for maintenance by;
- Turn the HAND-OFF-AUTO selector switch on Temperature Control Panel AD-TCP-1 to the OFF position

NOTE

If maintenance is to be performed on the Air Handling Unit turn the ON-OFF switch at the unit to the OFF position and engage the locking device and open the circuit breaker on MCC-91A. Follow approved **Lockout/Tagout** procedures (See Chapter VI, Safety).

d. AIR HANDLING UNIT: AD-ACU-2

1. Start-Up

- Close the circuit breaker on MCC-91A for Air Handling Unit AD-ACU-2
- Verify the ON-OFF switch at the unit is in the ON position
- Verify that fans AD-EAF-1, 3, 5, 6, 11, 15, 19, 21, 22 and 25 are operational
- Turn the HAND-OFF-AUTO selector switch on Temperature Control Panel AD-TCP-1 to the AUTO position
- The supply fan will start in response to the DDC System and other controls as described under normal operation

2. Shutdown

- The unit may be shutdown by utilizing the DDC keyboard control function or in the case of emergency or for maintenance by;
- Turn the HAND-OFF-AUTO selector switch on Temperature Control Panel AD-TCP-1 to the OFF position.

NOTE

If maintenance is to be performed on the Air Handling Unit turn the ON-OFF switch at the unit to the OFF position and engage the locking device and open the circuit breaker on MCC-91A. Follow approved **Lockout/Tagout** procedures (See Chapter VI, Safety).

e. AIR HANDLING UNIT: AD-ACU-3

1. Start-Up

- Close the circuit breaker on MCC-91A for Air Handling Unit AD-ACU-3
- Verify the ON-OFF switch at the unit is in the ON position
- Verify that fans AD-REF-2 and AD-EAF 4 and 7 are operational
- Turn the HAND-OFF-AUTO selector switch on Temperature Control Panel AD-TCP-1 to the AUTO position
- The supply fan will start in response to the DDC System and other controls as described under normal operation

2. Shutdown
   - The unit may be shutdown by utilizing the DDC keyboard control function or in the case of emergency or for maintenance by;
   - Turn the HAND-OFF-AUTO selector switch on Temperature Control Panel AD-TCP-1 to the OFF position

NOTE

If maintenance is to be performed on the Air Handling Unit turn the ON-OFF switch at the unit to the OFF position and engage the locking device and open the circuit breaker on MCC-91A. Follow approved **Lockout/Tagout** procedures (See Chapter VI, Safety).

f. AIR HANDLING UNIT: AD-ACU-4

1. Start-Up
   - Close the circuit breaker on MCC-91A for Air Handling Unit AD-ACU-4
   - Verify the ON-OFF switch at the unit is in the ON position
   - Verify that fans AD-EAF-10, 12, 13, 14, 16, 17, 18, 20, 23 and 24 are operational
   - Turn the HAND-OFF-AUTO selector switch on Temperature Control Panel AD-TCP-1 to the AUTO position
   - The supply fan will start when any of Exhaust Fans AD-EAF-9, 10, 12, 13, 14, 16, 17, 18, 20, 23 or 24 are ON as described under normal operational

2. Shutdown
   - The unit may be shutdown by utilizing the DDC keyboard control function or in the case of emergency or for maintenance by;
   - Turn the HAND-OFF-AUTO selector switch on Temperature Control Panel AD-TCP-1 to the OFF position

NOTE

If maintenance is to be performed on the Air Handling Unit turn the ON-OFF switch at the unit to the OFF position and engage the locking device and open the circuit breaker on MCC-91A.

Follow approved **Lockout/Tagout** procedures (See Chapter VI, Safety).

g. CHILLED WATER BOOSTER PUMPS: AD-CBP-1, 2, 3 AND 4

1. Start-Up
   - Close the circuit breaker on MCC-91A for each chilled water booster pump
   - Verify the ON-OFF switch at the unit is in the ON position
   - Turn the HAND-OFF-AUTO selector switch on temperature Control Panel AD-TCP-1 to the AUTO position
   - Each chilled water booster will start when it associated air handling unit is on and the outside Temperature is above 55°F

2. Shutdown
   - The unit may be shutdown by utilizing the DDC keyboard control function or in the case of emergency or for maintenance by;
   - Turn the HAND-OFF-AUTO selector switch on Temperature Control Panel AD-TCP-1 to the OFF position

NOTE

If maintenance is to performed on a Chilled Water Booster Pump turn the ON-OFF switch at the unit to the OFF position and engage the locking device and open the circuit breaker on MCC-91A. Follow approved **Lockout/Tagout** procedures (See Chapter VI, Safety).

h. EXHAUST AIR FANS

Exhaust Air Fans: AD-EAF-1 thru 7 and 9 thru 25

1. Start-Up
   - Close the circuit breaker on MCC-91A (LP-91A for AD-EAF-7) for the associated exhaust fan
   - Verify the ON-OFF switch at the unit is in the ON position
   - Turn the HAND-OFF-AUTO selector switch on temperature Control Panel AD-TCP-1 to the AUTO position

- The exhaust fans will start in response to the controls in Temperature Control Panel AD-TCP-1 as described under normal operation

2. Shutdown
   - The unit may be shutdown by utilizing the DDC keyboard control function or in the case of emergency or for maintenance by;
   - Turn the HAND-OFF-AUTO selector switch on Temperature Control panel AD-TCP-1 to the OFF position

NOTE

If maintenance is to be performed on a Exhaust fan turn the ON-OFF switch at the unit to the OFF position and engage the locking device and open the circuit breaker on MCC-91A (LP-91A for AD-EAF-7). Follow approved **Lockout/Tagout** procedures (See Chapter VI, Safety).

i. EXHAUST AIR FAN: AD-EAF-8

1. Start-Up
   - Close the circuit breaker on LP-91A
   - Turn the wall switch in the kitchen to the ON position
2. Shutdown
   - Turn the wall switch in the kitchen to the OFF position

NOTE

If maintenance is to be performed on the Exhaust Fan open the circuit breaker on LP-91A. Follow approved **Lockout/ Tagout** procedures (See Chapter VI, Safety).

j. EXHAUST AIR FANS: AD-EAF-26 THRU 37

1. Start-Up
   - Close the circuit breaker on LP-91A for the associated exhaust fan
   - Exhaust Fans AD-EAF-26 thru 32 will start on rise in temperature above the set point for the space thermostat. Exhaust Fans AD-EAF-33, 34 and 35 will start when the START button is depressed at the associated fume extractor. Exhaust fans AD-EAF-36 and 37 will be controlled by devices to be installed with future fume extractors

2. Shutdown
   - Adjust the set point for the thermostats for Exhaust Fans AD-EAF-26 thru 32. Push the STOP button for the Exhaust Fans AD-EAF-33, 34 and 35

NOTE

If maintenance is to be performed on the Exhaust Fans, open the circuit breaker on LP-91A. Follow approved **Lockout/Tagout** procedures (See Chapter VI, Safety).

k. RETURN EXHAUST FANS: AD-REF-1 AND 2

1. Start-Up
   - Close the circuit breaker on MCC-91A for Return Exhaust Fans AD-REF-1 and 2
   - Verify Air Handling Units AD-ACU-1 and 3 are operational for the operation of Return Exhaust Fans AD-REF-1 and 2, respectively
   - Turn the ON-OFF switch at the unit to the ON position
   - Turn the HAND-OFF-AUTO selector switch in Temperature Control Panel AD-TCP-1 to the AUTO position
   - Each return exhaust fan will start and run when its associated air handling unit is started by Temperature Control Panel AD-TCP-1

2. Shutdown
   - The unit may be shutdown by utilizing the DDC keyboard control function or in the case of emergency or for maintenance by;
   - Turn the HAND-OFF-AUTO selector switch on Temperature Control Panel AD-TCP-1 to the OFF position

NOTE

If maintenance is to be performed on a Return Exhaust Fan turn the ON-OFF switch at the unit to the OFF position and engage the locking device and open the circuit breaker on MCC-91A. Follow approved **Lockout/Tagout** procedures (See Chapter VI, Safety).

l. UNIT HEATERS: AD-WUH-1, 2, 3, 4 AND 5

1. Start-Up

- Close the circuit breaker on LP-91A for Unit Heaters AD-WUH-1, 2, 3, 4 and 5
- Verify hot water valves are open to the unit and the heating boiler and hot water circulating pumps are operational
- The unit heater fan will start when the room temperature falls below the room thermostat's adjustable set point

2. Shutdown

- Lower the adjustable set point on the room thermostat below the room temperature.

NOTE

If maintenance is to be performed on any Unit Heater open the circuit breaker on LP-91A for the associated unit heater. Follow approved **Lockout/Tagout** procedures (See Chapter VI, Safety).

m. FAN COIL COOLING UNITS: AD-FCU-1, 2, 3 AND 4

1. Start-Up

- Close the circuit breaker on LP-91A for Fan Coil Cooling Unit AD-FCU-1, 2, 3 and 4
- Verify the chilled water valves are open to the unit and the chiller is operational
- The fan coil cooling unit fan will start when the room temperature rises above the room thermostat's adjustable set point

2. Shutdown

- Raise the adjustable set point for the room thermostat to above the room temperature

NOTE

If maintenance is to be performed on any Fan Coil Cooling Unit open the circuit breaker on LP-91A for the associated unit. Follow approved **Lockout/Tagout** procedures (See Chapter VI, Safety).

n. PACKAGED AIR CONDITIONING UNIT: AD-PUC-1

1. Start-Up

- Close the circuit breakers on LP-91A for the Packaged Air Conditioning Unit AD-PUC-1
- Verify the condenser cooling water supply and return valves are open to the unit
- Turn the ON-OFF switch on the wall mounted control panel to the ON position
- The packaged air conditioning unit will start and run in response to the settings on the wall mounted seven-day programmable thermostat

2. Shutdown

- Turn the ON-OFF switch on the wall mounted control panel to the OFF position

NOTE

If maintenance is to be performed on the unit, open the circuit breakers on LP-91A. Follow approved **Lockout/Tagout** procedures (See Chapter VI, Safety).

o. AIR PURIFICATION UNIT: AD-APU-1

1. Start-Up

- Close the circuit breaker on LP-91A for Air Purification Unit AD-APU-1
- Turn the ON-OFF switch at the unit to the ON position and the unit will run continuously

2. Shutdown

- Turn the ON-OFF switch at the unit to the OFF position

NOTE

If maintenance is to be performed on the Air Purification Unit open the circuit breaker on LP-91A. Follow approved **Lockout/Tagout** procedures (See Chapter VI, Safety).

p. TEMPERATURE AIR COMPRESSOR EQUIPMENT: AD-TAC-1A AND 1B

1. Start-Up

- Close the circuit breaker on MCC-91 for Temperature Air Compressor Equipment AD-TAC-1A and 1B

- Close the circuit breaker disconnect switch at unit mounted control panel

- The lead compressor of Temperature Air Compressor Equipment AD-TAC-1A and 1B will start and run in response to pressure switch settings

2. Shutdown
   - Open the circuit breaker disconnect switch at the unit mounted control panel

NOTE

If maintenance is to be performed on the Temperature Air Compressor Equipment, open the circuit breaker disconnect switch at the unit and engage the locking device and open the circuit breaker on MCC-91. Follow approved **Lockout/Tagout** procedures (See Chapter VI, Safety).

(4) MONITORS AND ALARMS

The Heating, Ventilating and Air Conditioning System is controlled by a Direct Digital Control (DDC) Building Management System, that consists of a Central Processing Unit, CRT, keyboard, DDC Temperature Control Panels, and hard copy Printer. A control station and printer that receive and display status and alarm conditions are located in the Electrical Room.

Status and Alarm Points displayed by the DDC system are as follows:

a. AIR HANDLING SYSTEMS

Point	AD-ACU System					
Description	Type	Alarm	1	2	3	4
Outside Temp	AI	Low		X	X	
Outside Temp Pt.	AI			X	X	
Mixed Air Temp	AI	Low	X		X	
Htg. Coil Temp	AI	Low	X	X	X	X
Disch Temp	AI	Hi/Low	X	X	X	X
Disch RH	AI	Hi/Low				X
Space Sensors	AI	Hi/Low	2	1	2	
Return Temp	AI	Hi/Low	X		X	
Return RH	AI	Hi/Low	X		X	

Point	AD-ACU System					
Description	Type	Alarm	1	2	3	4
Exhaust Temp	AI	Hi/Low		2		
Exhaust RH	AI	Hi/Low		2		
Supply CFM	AI	X	X	X	X	X
Supply AFS	AI	X	X	X	X	X
Supply Static	AI	Hi/Low	X			X
Return CFM	AI	X	X		X	
Return AFS	DI	X	X	X	X	X
Supply Fan Start	DO	No flow	X	X	X	X
Supply Fan Start	DI (H-O-A)		X	X	X	X
Supply Interlocks	DO	No flow	As required			
High Static	DI	Hi				X
Low Static	DI	Low		X		X
Smoke	DI	X	All fans_>200 CFM)			
Low Temp	DI	Low	X	X	X	X
Min. O.A. Damper	PDO		2	X	2	X
Max. O.A. Damper	PAO		X		X	
Cooling Coil Valve	PAO		X	X	X	X
Heating Coil Valve	PAO		X	X	X	X
By-Pass Damper	PAO					X
Cooling Coil Pump Start	DO		X	X	X	X
Cooling Coil Pump Start	DI		X	X	X	X

H-O-A - Hand-Off-Auto
AI - Analog Input
AO - Analog Output
DI - Digital Input
DO - Digital Output
PDO - Pneumatic Digital Output
PAO - Pneumatic Analog Output

b. EXHAUST SYSTEMS

1. Exhaust Fans AD-EAF-1 thru 7, 9 thru 25 and 33 thru 37 have the following points:
   - H-O-A, DI, alarm in hand
   - Start/Stop, DO, no flow alarm
   - AFS, DI, no flow with on status
   - Exhaust Damper, PDO, failure to open alarm
   - High Temp or Smoke Alarm as required

2. Exhaust air fans AD-EAF-1, 3, 4 and 5 also have the following points:
   - Exhaust CFM, AI, alarm out of setpoint ATU Control, AO for control of associated ATU

c. COOLING SYSTEM

Point Type					
Point Description	AI	AO	DI	DO	Alarm
Chiller Start/Stop				X	
Chiller failure			X		X
Chiller trouble			X		X
Chiller status			X		Off normal
Remote/Local CHW CnH.				X	Local
CHW set point		X			
CHWS temp	X				Hi/Low
CHWR temp	X				Hi/Low
Chilled Water Pumps					
Start/Stop				2	X
Flow			2		X
CWS temp	X				Hi/Low
CWR temp	X				
CW Pump					
Start/Stop				X	
Flow			X		
CW Flow	X				Hi/Low

d. HEATING SYSTEM AND MISCELLANEOUS

Point Type					
Point Description	AI	AO	DI	DO	Alarm
Boiler start				X	X
Boiler failure			X		X
Boiler remote/local		X			
HWS set point	X				
HWS temp	X				Hi/Low
HWR temp	X				Hi/Low
Heating Pumps					
Start/Stop				4	
Flow					
Temperature Control Air Pressure	X				Hi/Low
Lab Compressed Air Pressure	X				Hi/Low
Lab Vacuum Pressure	X				Hi/Low
Wet Well Sump High Level		X			Hi
Low Pressure Preaction Sprinkler			X		Low

H-O-A, - Hand-Off-Auto
AI - Analog Input
AO - Analog Output
DI - Digital Input
DO - Digital Output
PDO - Pneumatic Digital Output
PAO - Pneumatic Analog Output

I. POWER DISTRIBUTION SYSTEM

The power distribution system is shown in detail on the contract plans and various shop drawings. Refer to Table III-AD-AB-1 Administration Building - Facility Equipment Summary for contract plans and shop drawings numbers which pertain to the power distribution system.

III-ES-SWG 13.2 KV METALCLAD SWITCHGEAR

A. GENERAL

The 13.2 KV metalclad switchgear consists of the following equipment:

- Outdoor Switchgear No. 1
- Indoor Switchgear No. 2
- Indoor Switchgear No. 3
- Station Battery Rack and Charger Assemblies Nos. 1 and 2

Outdoor Switchgear No. 1 is located inside the Plant Switchgear Building north of the Main Pumping Station. Indoor Switchgear No. 2 is located at the north end of the Operating Room in the Main Pumping Station. Indoor Switchgear No. 3 is located in Switchgear Room of the Standby Power Facility. The station battery rack and charger assemblies for Switchgear Nos. 1 and 2 are located in the Electrical Room in the Main Pumping Station.

The 125V DC and 24V DC power consoles for Indoor Switchgear No. 3 are located in the Switchgear Room of the Standby Power Facility.

Refer to Table III-ES-SWG-1, 13.2 KV Metalclad Switchgear - Facility Equipment Summary, for control numbers, manufacturers, equipment capacities, and operation, maintenance, contract plans and shop drawing references. Refer to the Contractor's O&M Manual for Manufacturer's Service Manuals pertaining to equipment in the 13.2 KV Metalclad Switchgear.

B. OUTDOOR SWITCHGEAR NO. 1

(1) DESCRIPTION

Outdoor Switchgear No. 1 is provided to distribute electrical power from the incoming Tampa Electric Company (TECO) lines or from the standby generator equipment to the treatment plant (see Figure III-PO-SPF-7).

Outdoor Switchgear No. 1 consists of two Sections, designated A and B, with 13 cubicles in each section. The cubicles consist of main, distribution, tie and standby system breakers, lighting and ventilation controls, control power and auxiliary power transformers, and automatic start-stop controls for the circuit breakers and standby generator equipment. Each of the circuit breakers are horizontal draw-out type air circuit breakers which are operated by trip and close motor operators under power supplied by the station battery rack and charger assemblies. The cubicles which make up the Outdoor Switchgear No. 1 are as follows:

- Cubicle No. 1, designated Tie Breaker 1-52-Tie, is provided with indicators and a switch. Refer to the Contractor's O&M Manual for a detailed drawing of the cubicle

- Cubicles Nos. 2 and 21 are designated Standby System Breakers 1-52-S1 and 1-52-S2, respectively. Each cubicle is provided with various indicators, push buttons, switches and like devices. Refer to the Contractor's O&M Manual for detailed drawings of the cubicles

- Cubicle No. 22 is designated Future Distribution Breaker 1-52-7B. It is provided with a circuit breaker enclosure with space for installation of future controls.

- Cubicles Nos. 8, 7, 6, 5, 4, 3, 23, 24, 15, 16, 17, 18, 19, 20, 25, and 26 are designated Distribution Breakers 1-52-1A, 1-52-2A, 1-52-3A, 1-52-4A, 1-52-5A, 1-52-6A, 1-52-8A, 1-52-9A, 1-52-1B, 1-52-2B, 1-52-3B, 1-52-4B, 1-52-5B, 1-52-6B, 1-52-8B, and 1-52-9B respectively. Each cubicle is provided with various indicators, push buttons, switchers and like devices. Refer to the Contractor's O&M Manual for detailed drawings.

- Cubicle No. 9, designated Auxiliary Compartment AUX-A2, is provided with Auxiliary Power Transformer A and various indicators, push buttons and like devices. Refer to the Contractor's O&M Manual for detailed drawings of the cubicle.

- Cubicles Nos. 10 and 13 are designated Main Breakers 1-52-1 and 1-52-2, respectively. Each cubicle is provided with various indicators, switches and like devices. Refer to the Contractor's O&M Manual for detailed drawings of the cubicle.

- Cubicle No. 11, designated Incoming Line No. 1 Auxiliary Compartment AUX-A1, is provided with potential transformers and auxiliary relays and various indicators and like devices. Refer to the Contractor's O&M Manual for a detailed drawing of the cubicle.

- Cubicle No. 12, designated Incoming Line No. 2 Auxiliary Compartment AUX-B1, is provided with potential transformers and auxiliary relays and an indicator. Refer to the Contractor's O&M Manual for a detailed drawing of the cubicle.

- Cubicle No. 14, designated Auxiliary Compartment AUX-B2, is provided with Auxiliary Power Transformer B and various indicators, push buttons and like devices. Refer to the Contractor's O&M Manual for a detailed drawing of the cubicle.

(2) NORMAL OPERATION

Main Breakers 1-52-1 and 1-52-2 are automatically operated from the Indoor Switchgear No. 3. Under normal operation, when the master transfer function control switch on the Switchgear No. 3 is in the AUTO position, each breaker will automatically open if the TECO power supply is interrupted. The breakers are arranged to automatically close under automatic or manual power restore sequences as described in the subsection headed "Standby Generator Equipment: SPF-G3, 4, 5, and 6" of the section headed "Standby Power Facility".

NOTE

Each of the main breakers will automatically open at any time when the lock-out relay detects a breaker overcurrent condition.

The main breakers are provided with interlocks which prevent operation of the breakers which would result in parallel operation of the TECO supply lines.

Under normal operation, the distribution breakers are manually operated from the circuit breaker control switches on Cubicles Nos. 8, 7, 6, 5, 4, 3, 23, 24, 15, 16, 17, 18, 19, 20, 25, and 26. Under normal, the distribution breakers are closed.

NOTE

Each distribution breaker will automatically open at any time when the lock-out relay detects a breaker overcurrent or ground fault condition.

Under normal operation, Tie Breaker 1-52-Tie automatically operates. When the master transfer function control switch is in the AUTO position and a power interruption occurs on one TECO supply line, the tie breaker will automatically close. If a power interruption occurs on the second TECO supply line, the tie breaker will automatically open.

NOTE

The tie breaker will automatically open at any time when the lock-out relay for Main Breakers 1-51-1 or 1-52-2 detects any overcurrent condition in the TECO supply line.

The tie breaker is provided with interlocks which prevent operation of the breaker which would result in parallel operation of the TECO supply lines or would result in parallel operation of the standby generation and a TECO supply line.

Standby System Breakers 1-52-S1 and 1-52-S2 are manually operated from the circuit breaker control switches on Cubicles Nos. 2 and 21. Under normal operation, the standby system breakers are closed.

NOTE

Each of the standby system breakers will automatically open at any time when the lock-out relay detects a breaker overcurrent or ground fault condition. In addition, each of the standby system breakers will also automatically open at any time when the lock-out relay for Distribution Breaker 3-52-S1; or 2-52-S2 on Indoor Switchgear No. 3 detects a breaker overcurrent or ground fault condition.

(3) ALTERNATE OPERATION

The main and tie breakers can be manually operated from the circuit breaker control switches on the associated cubicles, when the master transfer function control switch is in the MANUAL position.

(4) MONITORS AND ALARMS

The main breakers are provided with ammeters, volt meters, wattmeters, varmeters, and OPEN-FAULT TRIP-CLOSED breaker position indicating lights on Cubicles Nos. 10 and 12. Ammeters, volt meters, wattmeters, and OPEN-FAULT TRIP -CLOSED breaker position indicating lights for the main breakers are also provided on the Distribution Breaker section as Indoor Switchgear No. 3 in the Standby Power Facility.

The distribution breakers are provided with ammeters, wattmeters, and OPEN-FAULT TRIP-CLOSED breaker position indicating lights on Cubicles Nos. 8, 7, 6, 5, 4, 3, 23, 24, 15, 16, 17, 18, 19, 20, 25, and 26.

The tie breaker is provided with OPEN-CLOSED breaker position indicating lights on Cubicle No. 1.

The standby system breakers are provided with ammeter, volt meter, and OPEN-FAULT TRIP-CLOSED breaker position indicating lights on Cubicles Nos. 2 and 21.

Indication of the fault trip lock-out relay status and breaker closed status for the main, distribution, and standby system breakers are relayed to the Computer System in the Process Control Room. Indication of tie breaker closed status is also relayed to the Computer system in the Process Control Room.

C. INDOOR SWITCHGEAR NO. 2

(1) DESCRIPTION

Indoor Switchgear No. 2 is provided to distribute electrical power from the standby generator equipment MP-G-1 and MP-G-2 to Indoor Switchgear No. 3.

Indoor Switchgear No. 2 consists of two Sections, designated A and B, with 4 cubicles in each section. The cubicles consist of generator main, distribution and tie breakers, and auxiliary cubicles which include control power transformers. Each of the circuit breakers are horizontal draw-out type air circuit breakers which are operated by trip and close motor operators under power supplied by the station battery rack and charger assemblies and by the control power transformers. The cubicles which make up Indoor Switchgear No. 2 are as follows:

- Cubicles Nos. 1 and 8 are designated Generator G-1 Main Breaker 2-52-1 and Generator G-2 Main Breaker 2-52-2, respectively. Each cubicle is provided with various indicators, switches, push buttons and like devices. Refer to the Contractor's O&M Manual for a detailed drawing of the cubicles.

- Cubicles Nos. 2 and 7 are designated Auxiliary Compartments AUX-A1 and AUX-B1, respectively. Each cubicle is provided with control power transformers and indicators. Refer to the Contractor's O&M Manual for detailed drawings of the cubicles.

- Cubicles Nos. 3 and 6 are designated Distribution Breakers 2-52-S1 and 2-52-S2, respectively. Each cubicle is provides with various indicators, switches, push buttons and like devices. Refer to the Contractor's O&M Manual for detailed drawings of the cubicles.

- Cubicle No. 4, designated Distribution Breaker 2-52-S3 (spare) is provided with various indicators, switches, push buttons and like devices. Refer to the Contractor's O&M Manual for a detailed drawing of the cubicle.

- Cubicle No. 5, designated Tie Breaker 2-52-Tie (spare) is provided with various indicators and a switch.

(2) NORMAL OPERATION

Main Breaker 2-52-1 and Main Breaker 2-52-2 are manually operated by the circuit breaker control switch when the LOCAL-REMOTE selector switch at the respective generator control panel, located in the control section of Indoor Switchgear No. 3 is in the REMOTE position.

NOTE

Each generator main breaker will automatically open at any time when the lock-out relay detects a breaker overcurrent, a ground fault condition or differential current condition or when the lock-out relay detects a turbine-generator unit malfunction condition.

Distribution Breakers 2-52-S1 and 2-52-S2 are manually operated from circuit breaker control switch, when the LOCAL-REMOTE selector switch at the respective engine Control Panel, located in the control section of Indoor Switchgear No. 3, is in LOCAL position.

NOTE

Distribution Breakers 2-52-S1 and 2-52-S2 will automatically open at any time when the lock-out relay detects a breaker overcurrent, or a ground-fault condition.

Distribution Breaker 2-52-S3 (spare) is manually operated from the circuit breaker control switch on Cubicle No. 4 of Indoor Switchgear No. 2. Under normal operation, the breaker is open.

NOTE

Distribution Breaker 2-52-S-3 will automatically open at any time when the lock-out relay detects a breaker overcurrent or a ground fault condition.

Tie Breaker 2-52-Tie (spare) is manually operated from the circuit breaker control switch on Cubicle No. 5.

(3) MONITORS AND ALARMS

The generator main breakers are provided with ammeters, volt meters, and OPEN-FAULT TRIP-CLOSED breaker position indicating lights on Cubicles Nos. 1 and 8. OPEN-CLOSED breaker position lights for the generator main breakers provided on the respective generator control section at Indoor Switchgear No. 3.

The distribution breakers are provided with ammeters, wattmeters, and OPEN-FAULT TRIP-CLOSED breaker position indicating lights on Cubicles Nos. 3, 4 , and 6.

The tie breaker is provided with OPEN-CLOSED breaker position indicating lights on Cubicle No. 5.

Indication of fault trip lock-out relay status and breaker closed status for the generator main and distribution and spare breakers are relayed to the Computer System in the Process Control Room.

D. INDOOR SWITCHGEAR NO. 3

(1) DESCRIPTION

Indoor Switchgear No. 3 is provided to distribute electrical power from the standby generator equipment to Outdoor Switchgear No. 1.

Indoor Switchgear No. 3 consists of two sections, designated Medium Voltage Section and Control Section. The medium voltage section consists of ten cubicles. The cubicles consist of distribution breakers, tie breaker and generator breakers. Each of the circuit breakers are horizontal draw-out type vacuum circuit breakers which are operated by close and trip motor operators under power supplied by the station battery and charger assemblies and by the control power transformers. The control section consists of ten cubicles. The cubicles consist of generator controls, distribution breaker controls and master generator controls for Switchgear No. 3 are described in the subsection titled "Power Facilities".

E. STATION BATTERY RACK AND CHARGER ASSEMBLIES NOS. 1 AND 2

(1) DESCRIPTION

Station Battery Rack and Charger Assemblies Nos. 1 and 2 are provided to supply 125-volt DC electrical power for operating the power circuit breakers in Outdoor Switchgear No. 2.

The station battery rack and charger assemblies consist of 2 battery control consoles with 46 nickel-cadmium type cells and a battery charger for each console.

(2) NORMAL OPERATION

Each battery control console is provided with a FLOAT-HIGH RATE selector switch. Under normal operation, the FLOAT-HIGH RATE selector switch for each unit is required to be in the FLOAT position to maintain the station batteries at full charge.

NOTE

The normal battery voltage should range from 128.5 to 132.5 volts with the FLOAT-HIGH RATE switch in the FLOAT position. If the voltage is below the minimum voltage, set the FLOAT-HIGH RATE switch in the HIGH RATE positions until the battery voltage is within this range.

(3) MONITORS

Ammeters and a station battery voltage meter are provided on the battery control consoles.

F. 125V DC AND 24V DC POWER CONSOLES

(1) DESCRIPTION

A 125V Power Console is provided to supply the 125V DC electrical power for operating the power circuit breakers in Indoor Switchgear No. 3. The 125V Power Console consists of dual battery chargers and a battery rack having 92 nickel-cadmium type cells and DC distribution panel.

A 24V DC Power Console is provided to supply the 24V DC electrical power for operating the generator controls in Indoor Switchgear No. 3. The 24V Power Console consists of dual battery chargers and a battery rack having 20 nickel-cadmium type cells and a DC distribution panel.

(2) NORMAL OPERATION

Each DC Power Console is provided with a Charger "A" equalization charge switch, Load Share switch and Charger "B" equalization charge switch. Under normal operation, the Charger equalization switches should be set to OFF position, and the load share switch in the ON position.

NOTE

The normal battery voltage should range from 128.5 to 132.5 volts for the 125V DC system and 24 to 28 volts for the 24V DC system.

(3) MONITORS

DC voltmeter and ammeter for each charge are provided on each DC Power Console. Also AC main failure, Low DC voltage, Charger "D" failure and Charger "B" failure indicators are provided on each DC Power Console.

III-ES-OST OUTDOOR SUBSTATION TRANSFORMERS

A. DESCRIPTION

The outdoor substation transformer equipment includes:

- Power Feed and Distribution System
- Compartmental Substations
- Single-Circuit Integral Type Substations

Refer to Table III-ES-OST-1, Outdoor Substation Transformers - Facilities Equipment Summary, for control numbers, manufacturers, equipment capacities and operation, maintenance, contract plans and shop drawing references. Refer to the sections of the various Contractor's O&M Manuals for Manufacturer's Service Manuals pertaining to the outdoor substation transformer equipment.

Refer to Table III-ES-OST-2, Outdoor Substation Transformers and Figure III-PO-SPF-7 for location, contract plan designation, capacity, transformer pad number, contract division of equipment installation, and the equipment associated with each transformer.

B. POWER FEED AND DISTRIBUTION SYSTEM

Tampa Electric Company (TECO) 69 kv overhead lines supplies power to the Maritime Substation located west of the treatment plant site. Two 69 to 13.2 kv transformers are provided to reduce the voltage to 13.2 kv at the substation.

Two 13.2 kv lines, from the substation supply the power to the Tampa Advanced Wastewater Treatment Plant. One line feeds Section A of the 13.2 kv outdoor switchgear, designated Outdoor Switchgear No. 1, and the second line feeds Section B of the switchgear (see Figure III-PO-SPF-7). Section A and B are electrically connected through a normally open tie breaker which will close if power is interrupted on either feed line; permitting one 13.2 kv line to supply power to both sections of the switchgear.

TABLE III-ES-OST-2 - OUTDOOR SUBSTATION TRANSFORMERS

LOCATION	CONTRACT PLAN DESIGNATION	TRANSFORMER PAD NUMBER	CAPACITY KVA	POWER SUPPLIED TO
Administration Building	T-9A-1	-	750/840	Motor Control Center MCC-91
	T-9B-1	-	750/840	Motor Control Center MCC-91
Blower Building	T-8A-3	-	2500/2800/ 3500	Medium Voltage Motor Control Center MCC-80
	T-8B-3	-	2500/2800/ 3500	Medium Voltage Motor Control Center MCC-80

LOCATION	CONTRACT PLAN DESIGNATION	TRANSFORMER PAD NUMBER	CAPACITY KVA	POWER SUPPLIED TO
Blower Bldg. & Nitrification Pumping Station	T-8A-4	-	2000/2240	Switchgear No. 81
	T-8B-4	-	2000/2240	Switchgear No. 81
Control Building	T-5A-5	9	500	Motor Control Center MCC-501
	T-5B-5		500	Motor Control Center MCC-501
Filter Building No. 2	T-8A-1	-	1500/1680	Switchgear No. 84
	T-8B-1	-	1500/1680	Switchgear No. 84
Filter Building	T-5A-3	8	1500	Switchgear No. 56
	T-5B-3		1500	
Intermediate Pumping Station	T-4A-2	4	750	Motor Control Center MCC-47
	T-4B-2		750	Motor Control Center MCC-47
Junction Chamber No. 1	T-2A-3	6	500	Motor Control Center MCC-27
	T-2B-3		500	Motor Control Center MCC-27
Junction Chamber No. 1	T-2A-4	-	1000/1120	Motor Control Center MCC-27A
	T-2B-4	-	1000/1120	Motor Control Center MCC-27A
Main Pumping Station	T-3A-3	2	1500	Motor Control Center MCC-30
	T-3B-3		1500	Motor Control Center MCC-30
Main Pumping Station	T-3A-1	1	2500	Motor Control Center MCC-32
	T-3B-1		2500	Motor Control Center MCC-32
	T-3A-2		1500	Motor Control Center MCC-31
	T-3B-2		1500	Motor Control Center MCC-31
Operations and Maintenance Building.	T-2A-2	5	750	Switchgear No. 23
	T-2B-2		750	Switchgear No. 23
Oxygen Generator B-1	No. 2	-	225	Motor Control Center MCC-11
Oxygen Generator A-1	No. 1	-	225	Motor Control Center MCC-10
Plant Switchgear Building	T-1A-1	-	3000/3360/	Medium Voltage Motor Control
	T-1B-1	-	4200	Center No. 10
Primary Sedimentary Tank	T-5A-2	-	1000	Switchboard MS-41
	T-5B-2	-	1000	Switchboard MS-40
Raw Sewage Pump Station	T-2B-5	-	500	Motor Control Center MCC(---)
Raw Sewage Pumping Station	T-6A-1	-	2500	Substation No. 60

LOCATION	CONTRACT PLAN DESIGNATION	TRANSFORMER PAD NUMBER	CAPACITY KVA	POWER SUPPLIED TO
Screen and Grit Building No. 2	T-2A-1	3	500	Switchgear No. 20
	T-2B-1		500	Switchgear No. 20
Screen and Grit Building No. 3	T-2A-1A	-	500/560	Switchgear No. 28
	T-2B-1A	-	500/560	Switchgear No. 28
Sludge Thickening	T-8A-2	-	500/560	Motor Control Center MCC-87
	T-8B-2	-	500/560	Motor Control Center MCC-87
Sludge Treatment Building	T-5A-1	7	1500	Switchgear No. 50
	T-5B-1		1500	
Sludge Dewatering	T-5A-6	-	750/840	Motor Control Center MCC-502
	T-5B-6	-	750/840	Motor Control Center MCC-503
Sludge Heat Drying	T-4A-3	-	2500	Main Switchboard-SHD (Sludge
	T-4B-3	-	2,00	Heat Drying Facility)
Sludge Pumping Station No. 2	T-4A-1	-	1000	Switchgear No. 40
	T-4B-1		1000	Switchgear No. 40
Sludge Pumping and Final	T-8A-5	-	1500/1680	Switchgear No. 810
Sedimentation Tanks	T-8A-5	-	1500/1680	Switchgear No. 810
Standby Power Facility	T-9A-2	-	500/560	Motor Control Center MCC-92
	T-9B-2	-	500/560	Motor Control Center MCC-92

C. COMPARTMENTAL SUBSTATIONS

The following information applies to all Substation Transformers except T-1A-1, T-1B-1, T-8A-3 and T-8B-3. Each substation is a pad-mounted, compartmental outdoor unit with transformers and primary and secondary protective devices. The substations are rated at 13,200 volts delta primary, 3-phase , 3-wire, 60-hertz to 480/277 volts, wye secondary, 3-phase, 4-wire, 60-hertz, grounded neutral.

The transformers are liquid-filled, oil-insulated, self-cooled, 3-phase, 60-hertz transformers with insulation for 65 degrees C average temperature rise above a 40 degrees C ambient at full load continuous operation. Each transformer has a BIL rating of 95 kv. (The BIL rating is the transformer installation rating.)

The primary windings of the transformers are rated for 13,200 volts, 3-phase, 3-wire delta-connected with four 2-½ percent kva taps, two above and two below rated primary voltage. An externally operated tap changer for no-load operation is provided. The secondary windings are rated 480/277 volts, 3-phase, 4-wire, wye connected with the midpoint connection brought out and insulated for grounding.

Substations No. 1 and No. 2 (for the oxygen generation equipment) are rated at 4,160 volts, delta primary and the primary windings of their associated transformers are rated for 4,160 volts.

The impedance of each transformer rated 750 kva and above is 5.75 percent. The impedance of each transformer rated 500 kva and below is a minimum of 4.5 percent and a minimum of 5.75 percent.

Each transformer is supplied with a high and low voltage compartment, an oil-immersed load-make, load-break disconnect, 480-volt secondary breaker(s), and a tap changer. Transformers T-2A-1A, T-2B-1B, T-2A-4, T-2B-4, T-5A-6, T-5B-6, T-8A-1, T-8B-1, T-8A-2, T-8B-2, T-8A-4, T-8B-4, T-8A-5, T-8B-5, T-9A-1, T-9B-1, T-9A-2 and T-9B-2 are provided with primary fuses.

D. SINGLE CIRCUIT INTEGRAL TYPE SUBSTATIONS

The single circuit substations, located near the Plant Switchgear Building and designated T-1A-1, T-1B-1 (serving the oxygen generation facilities), T-8A-3 and T-8B-3 (serving the Diffused Aeration Air Blowers), are skid-mounted, outdoor units with transformers, primary load-break disconnect switches, secondary 4.16 kv power circuit breakers and secondary metering and protective relays. The substations are rated at 13,200 volts delta primary, 3-phase, 3-wire, 60-hertz to 4,160 volts wye secondary, 3-phase, 3-wire, 60-hertz resistance grounded neutral.

Each substation is provided with a liquid-filled, oil-insulated, self-cooled, 3-phase, 60-hertz transformer insulated for a 55/65 degree C temperature rise above a 40-degree C ambient at full load continuous operation. Each substation is provided with forced air cooling fans. The transformers are rated 150 kv BIL on the 13.2 kv side and 110 kv BIL on the 4.16 kv side.

Each substation is provided with an outdoor control cubicle for meters, protective relays, control power devices and instrument transformers.

Each transformer is provided with a load-make, load-break disconnect and with window-type current transformers.

Primary windings of the transformers are rated for 13,200 volts, 3-phase, 3-wire delta connected. Four rated kva taps, two above and two below primary voltage are provided as follows:

- 13,860 volts
- 13,530 volts
- 12,870 volts
- 12,540 volts

A wedge-type no-load tap changer is provided on the transformer and has five operating positions to match the above tap settings and the normal voltage setting.

Secondary windings of the transformers are rated 4,160/2,400-volt, 3-phase, 4-wire wye connected, with the midpoint connection brought out and insulated for grounding through a resistor.

Both substations are provided with neutral grounding resistors. The resistors are rated 2,400 volts for insulation on a 4,160/2,400-volt, 3-phase, 4-wire, 60-hertz system. The complete resistor bank is short time rated at 10 seconds, 200 amperes, at 760 degrees C rise over an ambient temperature of 40 degrees C.

III-FL-FB FILTER BUILDING NO. 1 AND NO. 2 AND JUNCTION CHAMBER NO. 6

A. GENERAL

Filter Building No. 1 and No. 2 are three-level structures containing the following equipment and systems:

- Sluice Gates
- Metering Equipment
- Rate Controller Equipment
- Effluent Water Strainers
- General Purpose Effluent Water Pumps
- Thickening Tank Dilution Water Pumps
- Chlorine Solution Water Pumps
- Sulfur Dioxide Solution Water Pumps
- Lawn Irrigation Water Pumps and Irrigation System
- Filter Backwash Water Pumps
- Filter Drain Pumps (Filters No. 21-26 and 31-36)
- Filter Backwash Air Blower Equipment
- Sump Pumping Equipment
- Liquid Polymer Storage and Feed Equipment
- Chlorination Equipment
- Sample Pumps
- Residual Chlorine Analyzers
- Sewage Sampling Equipment
- Hoisting Equipment
- Plant Air
- Plant Water
- Effluent Water
- Heating, Ventilating and Air Conditioning Equipment
- Power Distribution System

Junction Chamber No. 6 is located adjacent to Filter Building No. 2. Junction Chamber No. 6 receives nitrified effluent from the Final Sedimentation Tanks and distributes it to the Denitrification Filters. Nitrified effluent can also be provided to the Denitrification Filters from Final Sedimentation Tank Nos. 1-12 through the Nitrified Effluent Conduit. The nitrified effluent to Junction Chamber No. 6 comes from either Final Sedimentation Tanks No. 1-12 or from Final Sedimentation Tanks No. 13-20 (future), depending on plant operating mode. The only equipment located at Junction Chamber No. 6 are Sluice Gates

For a schematic diagram of the major items of equipment in Filter Building No. 1 (see Figure III-FL-FB-1). For a schematic flow diagram of Filter Building No. 2 and Junction Chamber No. 6 (see Figure III-FL-FB-2). For a schematic equipment diagram of the major items of equipment in Filter Building No. 2 (see Figure III-FL-FB-3). Refer to Tables III-FL-FB1-1 and III-FL-FB2-2, Facility Equipment Summary - Filter Buildings No. 1 and No. 2, respectively, for control numbers, manufacturers, equipment capacities, and operation, maintenance, contract plan and shop drawing references. Refer to the Division 4H6 Contractor's O & M Manual for Manufacturer's Service Manuals pertaining to equipment installed in Filter Building No. 1 and the Division 5H1

Contractor's O & M Manual for Manufacturer's Service Manuals pertaining to equipment installed in Filter Building No. 2 and Junction Chamber No. 6. Also, refer to the Division 5H2A, 9-176, 4H19, H-85, J-84 and E-91 Contractor's O & M Manuals for Manufacturer's Service Manuals pertaining to equipment installed or modified in Filter Building No. 1.

The Nitrified Effluent Conduit is an 84-inch by 72-inch underground conduit, provided to convey the Nitrification Stage Final Sedimentation Tank Nos. 1-12 effluent to the Denitrification Filters from the north. The Nitrified Effluent Conduit passes under Filter Building No. 1 and is the influent to Meter MS-4 described hereinafter (refer to Figure III-FL-FB-1 and Figure III-FL-DF-1). Another connection from Final Sedimentation Tank Nos. 1-12 and a connection to Final Sedimentation Tanks Nos. 13-20 through Junction Chamber No. 6 and Filter Building No. 2 can feed the Denitrification filters from the south. Nitrified Effluent through Junction Chamber No. 6 is metered by Meters FE-48 (MS-10) and FE-49 (MS-11) (refer to Figures III-FL-FB-2 and 3 and Figure III FL-DF-1).

The operator for each area is responsible for obtaining and logging information into the plant computer logging system and on forms as required. A list of the required information to be logged is obtained by pressing the "HELP" key on the computer at the control console in Filter Building No.1. Data is entered into the computer by pressing the "ENTER" key.

B. SLUICE GATES: FB1-SG-1 and 2, FB2-SG-1, AND JC6-SG1 THRU 6

(1) DESCRIPTION

Sluice gates FB1-SG-1 and 2 at Filter Building No. 1 are provided to permit the nitrified effluent to flow directly into the Final Effluent Channel from the Nitrified Effluent Conduit and, thus, bypassing Denitrification Filter Nos. 1-20. Sluice Gates FB1-SG-1 and FB1-SG-2 are 36-inch by 60-inch down opening, normally closed, motor operated sluice gates. Sluice gate FB2-SG-I is a 12-inch by 12-inch, down opening, manually operated sluice gate which allows scum to drain from the Nitrified Effluent Conduit to the Backwash Water Drain conduit in Filter Building No. 2. Sluice Gates JC6-SG-1 thru 4 are 60-inch by 84-inch flush bottom, motor operated sluice gates which control the nitrified effluent flow to the Filter Influent Conduits. Sluice Gates JC6-SG-5 and 6 are 60-inch by 84-inch down opening, normally closed, motor operated sluice gates which permit the nitrified effluent to flow directly into the Final Effluent Channel at Junction Chamber No. 6, bypassing Filter Building No. 2 and the Denitrification Filters (refer to Figure III-FL-FB-2 and Figure III-FL-DF-1).

Sluice Gates FB1-SG-1 and 2 are furnished with 125-volt d-c motor operators and provided with Battery Power Consoles, designated FB1-SG-1-BPC and FB1-SG-2-BPC, respectively. The battery section of each console consists of 96 cells of high-rate nickel-cadmium batteries rated at 80 ampere-hours for 8 hours nominal capacity. Each battery power console is provided with a battery charger, a FLOAT-HIGH RATE selector switch, a volt meter and an ammeter. When the FLOAT-HIGH RATE selector switch is in the FLOAT position, the battery charger will automatically maintain all batteries at full charge. When the FLOAT-HIGH RATE selector switch is in the HIGH RATE position, the battery charger will recharge the batteries.

Sluice Gates JC6-SG-1 thru 6 are each provided with 480 volt motor operators. Each motor operated sluice gate is provided with OPEN-CLOSE-STOP push buttons for the OFF position at each unit. Stop log grooves are provided to isolate one or more conduits and to provide for future connections.

(2) NORMAL OPERATION

Under normal operation, Sluice Gates FB1-SG-1 and 2 are required to be in the CLOSED position, and the FLOAT-HIGH RATE selector switch on each battery power console is required to be in the FLOAT position. When a high water level in the Filter Influent Conduits is sensed by the Bubbler Tube Liquid Level Transmitters (see the section headed "Denitrification Filters"), the operator should determine if it is necessary to open a sluice gate.

NOTE

After the high water level subsides and the sluice gates are closed, place the FLOAT-HIGH RATE selector switch in the HIGH RATE position until the batteries are completely recharged.

Under normal operation, Sluice Gate FB2-SG-1 is in the CLOSED position and isolates the Nitrified Effluent Conduit on the east side of Filter Building No. 2 from the Dewatering Drain Conduit. Sluice Gate FB2-SG-1 is opened by turning the manual gate operator when removal of scum from the Nitrified Effluent Conduit is required.

Sluice Gates JC6-SG-1, 2 and JC6-SG-3, 4 permit flow of Nitrified Effluent through the 72-inch and 48-inch diameter meters in Filter Building No. 2, respectively, to the Denitrification Filters. Under normal operation either pair or both pairs of Sluice Gates may be in the OPEN position depending on the flow to the filters. Under lower flow conditions JC6-SG-1 and 2 should be CLOSED and JC6-SG-3 and 4 should be OPEN allowing flow to PASS to the smaller 48-inch meter. When all flow to the filters is coming from Final Sedimentation Tanks No. 13-20, JC6-SG-1 thru 4 should all be in the OPEN position. Under normal operation, Sluice Gates JC6-SG-5 and 6 are in the CLOSED position to restrict flow between the Nitrified Effluent Conduit and the Denitrification Filter Effluent Conduit. Under emergency conditions Sluice Gates JG6-SG-5 and 6 may be opened manually to by-pass the filters with all or a portion of the Nitrified Effluent. Sluice Gates JC6-SG-1 thru 6 are motor operated and are provided with OPEN-CLOSE-STOP push buttons at each unit for local operation and an ON-OFF switch with a locking device for the OFF position if maintenance is to be performed.

(3) START-UP AND SHUTDOWN PROCEDURES

a. START-UP

- Close circuit breakers in Motor Control Center MCC-58A for FB1-SG-1 and 2 and in MCC-86 for JC6-SG-1 thru 6
- Close Main Disconnect Switch on each Battery Control Console for FB1-SG-1 and 2
- Close 125-volt d-c circuit breaker at each unit for FB1-SG-1 and 2
- Verify the ON-OFF switches at JC6-SG-1 thru 6 are in the ON position.

- Push the OPEN or CLOSE button at the gate.

NOTE

Limit switches are provided to de-energize the motor operator when the gate arrives at the completely OPEN or CLOSED position.

b. SHUTDOWN

- Push the STOP button

NOTE

If maintenance is to be performed on Sluice Gates FB1-SG-1 and 2, open the 125-volt d-c circuit breaker at the unit and engage the locking device on the STOP button. Follow approved **Lockout/Tagout** procedures (See Chapter VI, Safety).

If maintenance is to be performed on Sluice Gates JC6-SG-1 thru 6, open the circuit breaker on MCC-86 and turn the ON-OFF switch to OFF and engage the locking device. Follow approved **Lockout/Tagout** procedures (See Chapter VI, Safety).

(4) ALTERNATE OPERATION

a. MANUAL OPERATION

Each motor operator is provided with a handwheel for manual operation as follows:

- Depress motor operator declutching lever
- Turn handwheel counterclockwise to open or clockwise to close the gate

NOTE

Energizing the motor operator automatically disengages the declutching lever and returns gate to motor operation.

(5) MONITORS AND ALARMS

Each sluice gate motor operator is provided with a dial type gate position indicator.

Torque switches are provided to de-energize the motor operators if the gate movement becomes obstructed. Refer to Section 21 of the Division 4H6 and Section 25 of the Division 5H1 Contractor's O&M Manual for manufacturer's literature that describes the setting and operation of the torque switches.

The Filter Building Panel-Filter Section in the Filter Building No. 1 Control Room contains indicator lights for OPEN or CLOSED gate positions for Sluice Gates FB1-SG-1 and 2.

The annunciator panel on the Filter Building Panel-Filter Section contains alarms for Sluice Gates FB1-SG-1 and 2 and battery pack console as follows:

- High water level in east influent conduit (set for water Elevation 17.25)
- High water level in west influent conduit (set for water Elevation 17.25)
- High water east bypass gate open
- High water west bypass gate open
- Charger failure-east bypass gate
- Charger failure-west bypass gate
- Battery low voltage-east bypass gate
- Battery low voltage-west bypass gate

The annunciator panel on the Filter Control Console contains alarms to indicate Sluice Gates JC6-SG-5 or 6 are open.

The Remote Transmission Units located in the Filter Building No. 1 Control Room continuously scan and transmit the condition of all alarm points to the Computer Logger in the Process Control Room in the Main Pumping Station. Individual alarms are displayed by the Computer Logger.

C. METERING EQUIPMENT: MS-4 AND 5, FE-48 AND 49 (MS-10 AND 11), AND FE-60

(1) DESCRIPTION

The flow metering equipment other than rate controllers is provided as follows:

- Meter MS-4 measures and indicates nitrified effluent flow through the Nitrified Effluent Conduit to the Denitrification Filters
- Meters FE-48 (MS-10) and FE-49 (MS-11) measure and indicate nitrified effluent flow from Junction Chamber No. 6 to the Denitrification Filters
- Meter MS-5 measures and indicates general purpose effluent water flow from General Purpose Effluent Water Pumps FB1-GPP-1 and 2
- Meter FE-60 measures and indicates general purpose effluent water flow from General Purpose Effluent Water Pumps FB1-GPP-3 and 4

Meter MS-4 is a rectangular concrete venturi tube, cast in place with a flow range of 12 to 120 mgd. The indicator and indicator recorder have scale ranges of 0 to 120 mgd. Meter MS-4 measures only a portion of the flow to the Denitrification Filters; other influent to the Denitrification Filters comes through Junction Chamber No. 6 and is measured by Meters FE-48 and 49 (MS-10 and 11) in Filter Building No. 2. Under some operating modes no flow will go through the Nitrified Effluent Conduit and in those cases Meter MS-4 is not used. Meter MS-4 instrumentation includes an electronic flow indicating transmitter mounted at the unit, Indicator GF-21 mounted on the Filter Building Panel Miscellaneous Section (FBPMS) and Indicator-Recorder G-108 mounted on the Process Monitoring and Terminal Cabinet Addition (PMTCA) (refer to Figure III-FL-FB-4).

Meter FE-48 (MS-10) is a 48-inch magnetic flow meter with a flow range of 0 to 70 mgd. Meter FE-48 instrumentation includes flow indicator transmitter FIT-48 mounted near the unit, totalizer FQ-48 on the Filter Control Console, and flow indicator FI-48 on the Filter Control Console (refer to Figure III-FL-FB-4).

Meter FE-49 (MS-11) is a 72-inch magnetic flow meter with a flow range of 0 to 150 mgd. Meter FE-49 instrumentation includes flow indicator transmitter FIT-49 mounted near the unit, totalizer FQ-49 on the Filter Control Console, and flow indicator FI-48 on the Filter Control Console (refer to Figure III-FL-FB-4).

The Total Filter Influent Flow is displayed as the sum of Meters MS4, FE-48 and FE-49 by flow indicator, FI-50 on the Filter Control Console (refer to Figure III-FL-FB-4).

Meter MS-5 is a 12-inch diameter magnetic flowmeter with a flow range of 2,000 to 6,000 gpm. The local electronic flow indicating transmitter and Indicator G-106, mounted on the PMTCA, each have a scale range of 0 to 6,000 gpm (refer to Figure III-FL-FB-5).

Meter FE-60 is an 8-inch diameter magnetic meter with a flow range of 0 to 4,000 gpm. Meter FE-60 instrumentation includes flow indicator transmitter FIT-60 mounted at the unit, totalizer FQ-60 at the unit, and flow indicator FI-60 on the Filter Control Console (refer to Figure III-FL-FB-5).

(2) NORMAL OPERATION

Venturi Meter MS-4 measures, indicates and records the rate of flow of a portion of the nitrified effluent from Final Sedimentation Tanks No. 1-12 to the Denitrification Filters.

Meters FE-48 (MS-10) and FE-49 (MS-11) measure and indicate nitrified effluent flow from Junction Chamber No. 6 to the Denitrification Filters.

Meter MS-5 measures and indicates the rate of flow from General Purpose Effluent Water Pumps FB1-GPP-1 and 2.

Meter FE-60 measures and indicates the rate of flow from General Purpose Effluent Water Pumps FB1-GPP- 3 and 4.

(3) MONITORS

The output signal from the electronic flow indicating transmitters for Meters MS-4, FE-48 (MS-10) and FE-49 (MS-11) are the input signal to various sampling stations and chemical control panels (see Figure III-FL-FB-4).

The output signal from the electronic flow indicating transmitter for Meter MS-5 is the input signal to Indicator G-106 (see Figure III-FL-FB-5).

The Remote Transmission Units in the Control Room of the Filter Building No. 1 continuously scan and transmit all flow signals to the Computer Logger in the Process Control Room in the Main Pumping Station. Individual flows are displayed by the Computer logger.

D. RATE CONTROLLER EQUIPMENT: MRC-18 AND 19 AND FE-53 AND 54 (MRC 20 AND 21)

(1) DESCRIPTION

The rate controller equipment is provided to automatically control the rate of flow of backwash water to the Denitrification Filters.

The rate controller equipment for Denitrification Filter Nos. 1-20 consists of two 20-inch diameter cast iron venturi meters with a flow range of 0 to 10,000 gpm with integral motor operated Butterfly Valves designated MRC-18 and MRC-19, two electronic flow indicating transmitters (one serving each rate controller and mounted locally) and two Indicator-Control Set Point Stations designated GF-47 and GF-48 located on the Filter Building Panel-Filter Section, PBPFS (see Figure III-FL-FB-6).

The rate controller equipment for Denitrification Filter Nos. 21-26 and 31-36 consists of two 16-inch diameter magnetic meters with a flow range of 0 to 10,000 gpm and with adjacent motor operated Butterfly Valves designated FE-53 (MRC-20) and FE-54 (MRC-21), two electronic flow indicating transmitters FIT-53 and FIT-54 (one serving each rate controller and mounted locally) and two indicator set point Control Stations FIC-53 and FIC-54 located on the Filter Control Console in Filter Building No. 1 (see Figure III-FL-FB-7).

(2) NORMAL OPERATION

Under normal operation, Rate Controllers MRC-18, MRC-19, FE-53 (MRC-20) and FE-54 (MRC-21) are controlled from Indicator-Control Set Point Stations GF-47 and GF-48 for MRC-18 and 19, located on the FBPFS (see Figure III-FL-FB-6) and FIC-53 and FIC-54 for FE-53 and FE-54 located on the Filter Control Console (see Figure III-FL-FB-7). Each Manual Set Point Station is calibrated from 0 to 10,000 gpm. The output of Indicator-Control Set Point Stations GF-47 and GF-48 for MRC-18 and MRC-19 and FIC-53 and FIC-54 for FE-53 and FE-54 is a 4 to 20 ma d-c linear signal which is the master input signal to the local controller, respectively. The output of the local controller is to the motor operated butterfly valve, which moves to regulate the flow rate as set at the Set Point Station. For FE-53 and FE-54 the flow rate set point will normally be input at the Filter Control Computer but can also be input at FIC-53 and FIC-54, respectively. A backwash water flow rate of 8,400 gpm for each rate controller is recommended based on a design flow of 8 gpm per square foot of filter surface area during water only cycles and 6,300 gpm based on a design flow of 6 gpm per square foot of filter surface area during air-water cycles. MRC-18 and MRC-19 have only one set point each. It is recommended the input for all conditions be 8,400 gpm at GF-47 and GF-48, respectively.

(3) START-UP AND SHUTDOWN PROCEDURES

To start up and shut down the rate controller equipment use the following procedures:

a. START-UP

- Place the OFF-MANUAL-AUTO selector switch at the rate controller valve in the AUTO position.
- Set the desired flow rate on the FBPFS for MRC 18 and MRC-19 and on the Filter Control Console for FE-53 and FE-54 (as described above under "Normal Operation").

b. SHUTDOWN

- Turn the CLOSE-AUTO-MANUAL selector switch on the FBPFS for MRC 18 and MRC-19 and on the Filter Control Console for FE-53 and FE-54 to the CLOSE position.

(4) ALTERNATE OPERATION

Rate Controllers MRC 18 and MRC 19 may be manually operated from the controller mounted near each unit. Behind the cover of each controller is an OFF-MANUAL-AUTO selector switch and a Set Point Station calibrated from 0 to 10,000 gpm. To operate the rate controller equipment manually, move the selector switch to the MANUAL position and set the desired flow rate on the Set Point Station.

Rate Controllers FE-53 and FE-54 may be manually operated from the controls at each valve. Turn the OFF-MANUAL-AUTO selector switch to MANUAL and push the OPEN button to open the valve or the CLOSE button to close the valve.

NOTES

When the selector switch is in the AUTO position, control is transferred to the Filter Building Panel-Filter Section for MRC-18 and MRC-19 and to the Filter Control Console for FE-53 and FE-54.

When the selector switch is in the OFF position, the motor operated butterfly valve will close.

(5) MONITORS

The output signals from the electronic flow indicating transmitters for Rate Controllers MRC-18 and MRC-19 and FE-53 and FE-54 are the input signals to Indicator-Controller Set Point Stations GF-47 and GF-48 for MRC-18 and MRC-19 on the FBPFS and FIC-53 and FIC-54 for FE-53 and FE-54, respectively, on the Filter Control Console.

The rate controllers initiate an alarm if they sense a no-flow condition following a time delay after the backwash pump is started. The backwash water pump fail to start alarm is transmitted to the annunciator on the Filter Building Panel-Filter Section.

The Remote Transmission Units in the Filter Building No. 1 Control Room continuously scan and transmit the condition of all alarm points and flow signals to the Computer Logger in the Process Control Room in the Main Pumping Station. All flow signals and alarms are received and displayed by the Computer Logger.

E. EFFLUENT WATER STRAINERS: FB1-EWS-1 AND 2

(1) DESCRIPTION

Effluent water strainers are provided to remove small particles from the effluent water used for non potable water service throughout the plant. Services include general purpose effluent water, lawn irrigation water, chlorine solution water and thickening tank dilution water.

The Effluent Water Strainer equipment includes two motorized, automatic, Self-Cleaning Strainers, designated FB1-EWS-1 and 2, and associated gauges and controls. Each strainer has a rated capacity of 8,000 gpm. The straining media is a Delrin disc with 1/32-inch openings.

The backwash water pumps, which operate to clean the strainers, are vertical in-line pumps rated at 800 gpm at 45-foot total dynamic head. Each pump is driven by a 15 HP motor.

A control panel mounted near the strainers is provided with a HAND-OFF-AUTO selector switch, an adjustable cycle timer 10 to 150 minutes and operational indicating lights for each strainer (see Figure III-FL-FB-8).

Effluent water flow to the strainers can be selected from any of the following locations (see Figure III-FL-FB-1):

- Chlorinated effluent water from post-aeration chlorination tanks
- Denitrification Filters effluent from the Final Effluent Channel
- Nitrified effluent from a location ahead of the methanol addition point

(2) NORMAL OPERATION

Under normal operation, Strainers FB1-EWS-1 and 2 are used to supply chlorinated effluent water for general purpose water and to the Lawn Irrigation Water Pumps. Under normal operation when the HAND-OFF-AUTO selector switch for each strainer is in the AUTO position, the strainer drive will continuously rotate the drum which contains the straining media and the backwash cycle will be initiated as follows:

- When the cycle timer times out, the 6-inch ball valve in the strainers backwash water supply will begin to open. When the ball valve is 75 percent open, the associated backwash water pump will automatically start up and backwash the strainer for an adjustable period of time (20 to 200 seconds, set for 100 seconds). After this time period has elapsed, the 6-inch ball valve will begin to close. The associated backwash pump will stop when the valve is completely closed.
- If the strainer becomes clogged before the cycle timer times out, a low pressure switch mounted in the discharge of each strainer will initiate the backwash sequence described above when the pressure in the strainer discharge drops to 2.0 psig.

(3) START-UP AND SHUTDOWN PROCEDURES

To start up and shut down the strainers, use the following procedures:

a. START-UP

- Close the circuit breakers for the effluent water strainers and associated backwash water pumps on MCC-59.
- Open the petcock on top cover of the strainer to allow air to escape as strainer fills with water.
- Place the strainer selector switches on the control panel in the AUTO position.
- Set the desired backwash interval on the cycle timer (initial interval of 60 minutes recommended).
- For general purpose effluent water and lawn irrigation water flow to Strainers FB1-EWS-1 and 2 manually open the 24-inch influent butterfly valves to the final effluent channel.
- Close the petcock on the top cover when a solid stream of water appears.
- Open the 6-inch butterfly valve on the 6-inch effluent water line provided for strainer backwash.
- Open the two 4-inch butterfly valves on the backwash water pump suction lines, and the 6-inch butterfly valves on the pump discharge lines.
- Open the 1-1/2-inch ball valves on the low pressure switch lines.

NOTE

Limit switches are provided on the 24-inch and 10-inch influent butterfly valves. The strainers cannot be operated until an influent butterfly valve is completely open.

b. SHUTDOWN

- Turn the HAND-OFF-AUTO selector switch on the control panel to the OFF position.

NOTE

If maintenance is to be performed on a strainer or backwash water pump, open the circuit breaker on MCC-59, place the ON-OFF switch at the unit in the OFF position and engage the locking device. Follow approved **Lockout/Tagout** procedures (See Chapter VI, Safety).

(4) ALTERNATE OPERATION

When the HAND-OFF-AUTO selector switch is in the HAND position, the strainer drive and the associated backwash water pump operate continuously.

(5) MONITORS AND ALARMS

Motor Control Center 59 contains operational indicating lights for each strainer and backwash water pump. The local control panel contains POWER ON indicating lights and ON-OFF indicating lights for each strainer. The Filter Building Panel - Miscellaneous Section (FBPMS) contains ON-OFF indicating

lights for each strainer. A Vacuum-High Head Loss alarm is provided on the annunciator panel for each strainer.

The Remote Transmission Units in the Filter Building No. 1 Control Room continuously scan and transmit the condition of all alarm points to the Computer logger in the Process Control Room in the Main Pumping Station. All alarms are received and displayed by the computer logger.

F. GENERAL PURPOSE EFFLUENT WATER PUMPS: FB1-GPP-1, 2, 3 AND 4

(1) DESCRIPTION

The general purpose effluent water pumps are provided to supply effluent water for general plant use, including such services as cooling water for the Oxygen Generation and Storage Facilities, air conditioning cooling water, water to outdoor hose hydrants, polymer dilution water, and for pump seal and lubrication water. Refer to the subsection headed Effluent Water for discussion of the effluent water system. Effluent water is available to the pump suction as follows (see Figure III-FL-FB-1):

- Strained or unstrained nonchlorinated effluent water
- Strained or unstrained chlorinated effluent water

The General Purpose Effluent Water Pumping Equipment consists of four pumps, designated FB1-GPP-1, 2, 3, and 4 and associated drive units and controls.

The pumps are single-stage horizontal shaft, double suction, split case pumps driven by 300 HP motors for FB1-GPP-1 and 2 and 150 HP motors for FB1-GPP-3 and 4. Each general purpose water pump has a nominal rated capacity of 5,700 gpm at a rated head of 160 feet for FB1-GPP-1 and 2 and 2,775 gpm at 160 feet for FB1-GPP-3 and 4, all at a pump speed of 1,750 rpm (see Figure III-FL-FB-10).

The pumps are operated and controlled from MCC-58. Each pump is provided with START-STOP push buttons, selector switches for selecting FB1-GPP-1 or 2 and FB1-GPP-3 or 4, an operational indicating light and an elapsed time meter on MCC-58 and an ON-OFF switch with a locking device for the OFF position at the unit.

(2) NORMAL OPERATION

Under normal operation, only two pumps, one from each group FB1-GPP-1 or 2 and FB1-GPP-3 or 4, are required to provide general purpose effluent water. The other pumps are provided as standby units. A NORMAL-BYPASS selector switch on MCC-58 permits the operation of both FB1-GPP-1 and 2 at the same time. Selector switches on MCC-58 provide for selection of FB1-GPP-1 or 2 and FB1-GPP-3 or 4. When the START buttons on MCC-58 are depressed, the selected pumps will run continuously. The selected pump FB1-GPP-1 or 2 will restart automatically after power failure. The selected pump FB1-GPP-3 or 4 requires manual restart after power failure .

Under normal operation chlorinated water in the Final Effluent Channel may be of sufficient quality to be used as general purpose effluent water for pumps FB1-GPP-1 and 2. However, the suspended solids concentration in the water in the Final Effluent Channel may exceed an acceptable level. When the

strainers are operational, it is recommended that the water be strained. Normally, chlorinated water (strained or unstrained, depending upon solids content) should be used for general purpose effluent water.

The suction for pumps FB1-GPP-3 and 4, which primarily serve the Sludge Dewatering and Heat Drying Facilities, receives its water from the strained chlorinated effluent conduit.

(3) START-UP AND SHUTDOWN PROCEDURES

To start up and shut down the general purpose effluent water pumps use the following procedures:

a. START UP

- Open the valve in the pump seal water line which permits water from the pump discharge to flow to the pump seals.
- Open the manually operated 20-inch and pump suction butterfly valves from the strained effluent water conduit for pumps FB1-GPP-1 and 2 and make sure the associated effluent water strainer is in operation. For pumps FB1 GPP-3 and 4 open, the manually operated 16-inch pump suction butterfly valves in the line from the strained effluent water conduit (see Figure III-FL-FB-1).
- Open the manually operated suction and discharge butterfly valves for the selected pump.
- Open the two 14-inch valves for FB1-GPP-1 and 2 to permit flow through the 12-inch pressure regulating valve (see Figure III-FL-FB-1). Open the two 14-inch valves for FB1-GPP-3 and 4 to permit flow through the 8-inch pressure regulating valve (see Figure III-FL-FB-1).
- Turn the selector switches for FB1-GPP-1 and 2 and FB1-GPP-3 and 4 to the pump(s) desired.
- Depress the START push button on MCC-58 for each selected pump.

b. SHUTDOWN

- Depress the STOP button on MCC-58.

NOTE

If maintenance is to be performed on the pump, open the circuit breaker in MCC-58 and move the ON-OFF switch at the unit to the OFF position and engage the locking device. Follow approved **Lockout/Tagout** procedures (See Chapter VI, Safety).

(4) MONITORS AND ALARMS

An operational indicating light and an elapsed time meter for each pump is provided on MCC-58. ON and OFF indicating lights are provided on the Filter Building No. 1 Panel-Miscellaneous Section. Low and high pressure alarm switches are provided in the 14-inch general purpose effluent water header. Low seal water pressure alarms are provided for pumps FB1-GPP-3 and 4. Audible and visual alarm indicating is provided on the Filter Building Panel-Miscellaneous Section annunciator.

The Remote Transmission Units in the Filter Building No. 1 Control Room continuously scan and transmit the condition of all alarm points to the computer logger in the Process Control Room in the Main Pumping Station. All alarms are received and displayed by the computer logger.

Each pump and motor are provided with excessive vibration relays to automatically shut down the units.

G. THICKENING TANK DILUTION WATER PUMPS: FB1-TDP-1 AND 2

(1) DESCRIPTION

The thickening tank dilution water pumps are provided to supply effluent water to the sludge thickening tanks. Effluent water is available to the pump suction as follows.
(see Figure III-FL-FB-1):

- Strained or unstrained nonchlorinated effluent water.
- Strained or unstrained chlorinated effluent water.

The Thickening Tank Dilution Water Pumping Equipment consists of two Pumps, designated FB-TDP-1 and 2, and associated drive units and controls.

The pumps are single-stage horizontal shaft, double suction, split case pumps driven by 20 HP motors. Each thickening tank dilution water pump has a nominal rated capacity of 1,200 gpm at a rated head of 31 feet, at a pump speed of 1,200 rpm (see Figure III-FL-FB-9).

NOTE

The thickening tank dilution water pumps are provided to accommodate future dilution water requirements by replacing the 20 HP, 1,200 rpm motor with a 50 HP, 1,750 rpm motor (see Figure III-FL-FB-9).

The pumps are operated and controlled from MCC-59. Each pump is provided with START-STOP push buttons, an operational indicating light and an elapsed time meter on MCC-58 and an ON-OFF switch with a locking device for the OFF position at the unit.

(2) NORMAL OPERATION

Under normal operation only one pump is required to provide thickening tank dilution water. The second pump is provided as a standby unit. When the START button on MCC-59 is depressed, the selected pump will run continuously.

Under normal operation, it is anticipated that the unstrained, nonchlorinated water in the Final Effluent Channel will be of sufficient quality to be used as thickening tank dilution water. At times, however, it may be desirable to use the Post-Aeration-Chlorination Tanks Effluent. The water may be strained or unstrained, as required.

(3) START-UP AND SHUTDOWN PROCEDURES

To start up and shut down the thickening tanks dilution water pumps use the following procedures:

a. START-UP

- Open the valve in the pump seal water line which permits water from the pump discharge to flow to the pump seals.
- Open the manually operated 16-inch pump suction butterfly valve in the line from the unstrained effluent water conduit or from the Final Effluent Channel. Alternately, if strained water is to be used, open the manually operated 16-inch pump suction butterfly valve from strained effluent water conduit and make sure the associated effluent water strainer is in operation.
- Open the manually operated suction and discharge butterfly valves for the selected pump (see Figure III-FL-FB-1).
- Make sure that the rate controller equipment in the Sludge Treatment Building is ready to receive flow (refer to the section headed "Sludge Treatment Building and Sludge Thickening Tanks").
- Depress the START push button on MCC-59.

b. SHUTDOWN

- Depress the STOP push button on MCC-59.

NOTE

If maintenance is to be performed on the pump, open the circuit breaker in MCC-59 and move the ON-OFF switch at the unit to the OFF position and engage the locking device. Follow approved **Lockout/Tagout** procedures (See Chapter VI, Safety).

(4) MONITORS AND ALARMS

An operational indicating light and an elapsed time meter for each pump is provided on MCC-59. ON and OFF indicating lights are provided on the Filter Building Panel-Miscellaneous Section. A low pressure alarm switch is provided in the 12-inch thickening tanks dilution water header. Audible and visual alarm indicating is provided on the Filter Building No. 1 Panel-Miscellaneous Section annunciator.

The Remote Transmission Units in the Filter Building No. 1 Control Room continuously scan and transmit the condition of all alarm points to the computer logger in the Process Control Room in the Main Pumping Station. All alarms are received and displayed by the computer logger.

H. CHLORINE SOLUTION WATER PUMPS: FB1-CHSP-1, 2 AND 3

(1) DESCRIPTION

Chlorine solution water pumps FB1-CHSP-1 and 2 are provided to supply effluent water for making up chlorine solution to disinfect the plant effluent. Effluent water is available to the pump suction as follows (see Figure III-FL-FB-1):

- Strained or unstrained nonchlorinated effluent water
- Strained or unstrained chlorinated effluent water

Chlorine solution water pump FB1-CHSP-3 is provided to supply effluent water for making up chlorine solution to chlorinate return sludge. Strained plant final effluent water is supplied to the pump suction (see Figure III-FL-FB-1).

The Chlorine Solution Water Pumping Equipment consists of three Pumps, designated FB1-CHSP-1,2 and 3, and associated drive units and controls.

Pumps designated FB1-CHSP-1 and 2, are single-stage horizontal shaft, double suction, split case pumps driven by side mounted, horizontal, single-speed 50 HP motors through V-belt drives. Each chlorine solution water pump has a nominal rated capacity of 700 gpm at a rated head of 144 feet, at a pump speed of 1,750 rpm (see Figure III-FL-FB-11).

Chlorine solution Water Pump FB1-CHSP-3 is of the positive displacement, non-clogging progressive cavity type, driven by a 15 HP electric gear motor, directly connected to the pump. The Chlorine Solution Feed Pump has a nominal rated capacity of 115 gpm at a rated head of 110 psig at a pump speed of 415 rpm.

Pumps FB1-CHSP-1 and 2 are operated and controlled from MCC-59 and Pump FB1-CHSP-3 from MCC-59A. Each pump is provided with START-STOP push buttons, an operational indicating light and an elapsed time meter at its MCC and an ON-OFF switch with a locking device for the OFF position at the unit. Pump FB1-CHSP-3 is also provided with START-STOP push buttons at the unit.

(2) NORMAL OPERATION

Under normal operation only one pump, FB1-CHSP-1 or 2, is required to provide chlorine solution water for chlorinating effluent. The second pump is provided as a standby unit. When the START button on MCC-59 is depressed, the selected pump will run continuously.

FB1-CHSP-3 is provided for chlorinating return sludge. When either the START button on MCC-59A or the START button at the unit is depressed, the pump will run continuously.

Under normal operation chlorinated water in the Final Effluent Channel will be of sufficient quality to be used as chlorine solution water. However, the suspended solids concentration in the water in the Final Effluent Channel may exceed an acceptable level. When the strainers are operational it is recommended that the water be strained.

(3) START-UP AND SHUTDOWN PROCEDURES

To start up and shut down the chlorine solution water pumps use the following procedures:

a. START-UP

- Open the valve in the pump seal water line which permits water from the pump discharge to flow to the pump seals.
- Open the manually operated 10-inch pump suction butterfly valve for Pumps Nos. FB1-CHSP-1 and 2 in the line from the strained effluent water conduit and make sure the associated effluent water strainer is in operation. For Pump No. FB1-CHSP-3 open the manually operated 6-inch pump suction butterfly valve in the line from the strained effluent water conduit (see Figure III-FL-FB-1).
- For Pump Nos. FB1-CHSP-1 and 2 make sure that the chlorination equipment is operating as described hereinafter under the subsection headed "Chlorination Equipment".
- Depress the START push button on MCC-59 for Pump Nos. FB1-CHSP-1 and 2 or depress either the START push button on MCC-59A or the START push button at the unit for Pump No. FB1-CHSP-3.

b. SHUTDOWN

- Depress the STOP push button on MCC-59 for Pump Nos. FB1-CHSP-1 and 2 or depress either the STOP push button on MCC-59A or the STOP push button at the unit for Pump No. FB1-CHSP-3.

NOTE

If maintenance is to be performed on the pump, open the circuit breaker in MCC-59 or MCC-59A and move the ON-OFF switch at the unit to the OFF position and engage the locking device. Follow approved **Lockout/Tagout** procedures (See Chapter VI, Safety).

(4) MONITORS AND ALARMS

An operational indicating light and elapsed time meter for each pump is provided on its MCC. ON and OFF indicating lights, for Pump Nos. FB1-CHSP-1 and 2, are provided on the Filter Building Chlorination System Panel. A low pressure alarm switch is provided in the 8-inch chlorine solution water header for Pump Nos. FB1-CHSP-1 and 2. Audible and visual alarm indication is provided on the Filter Building Chlorination System Panel annunciator for Pump Nos. FB1-CHSP-1 and 2. Electrical overload, low seal water pressure and high discharge pressure audible and visual alarms are indicated on the annunciator in the Filter Building Panel-Miscellaneous Section for Pump FB1-CHSP-3.

The Remote Transmission Units in the Filter Building No. 1 Control Room continuously scan and transmit the condition of all alarm points to the computer logger in the Process Control Room in the Main Pumping Station. All alarms are received and displayed by the computer logger.

I. SULFUR DIOXIDE SOLUTION WATER PUMPS

(1) DESCRIPTION

Sulfur Dioxide Solution Water Pumps DCL-1 and 2 are provided to pump strained, chlorinated effluent water to the sulfonaters/ejectors where the effluent water mixes with gaseous sulfur dioxide to form an aqueous sulfur dioxide solution. The solution of sulfur dioxide is pumped to the final effluent channel, where it mixes with chlorinated effluent, to remove residual chlorine.

The sulfur dioxide solution water pumping equipment consists of two pumps, designated DCL-1 and 2, and associated drive units and controls.

Pumps designated DCL-1 and 2 are centrifugal, double suction, single stage, flexible coupled, vertically mounted, split case pumps driven by vertical, 40 HP motors. Each sulfur dioxide solution pump has a nominal rated capacity of 350 gpm at a rated head of 175 feet and at a pump speed of 1,800 rpm.

(2) NORMAL OPERATION

Under normal operation only one pump, DCL-1 or 2, is required to provide sulfur dioxide solution for dechlorinating plant effluent water. The second pump is provided as a standby unit. When the START button on MCC-59 is depressed, the selected pump will run continuously.

(3) START-UP AND SHUTDOWN PROCEDURES

To start up and shut down the sulfur dioxide solution water pumps use the following procedures:

a. START-UP

- Open the valve in the pump seal water line which permits water from the pump discharge to flow to the pump seals.
- Open the manually operated pump suction butterfly valve for Pump Nos. DCL-1 and 2 in the line from the strained effluent water conduit and make sure the associated effluent water strainer is in operation.
- For Pump Nos. DCL-1 and 2 make sure that the dechlorination equipment is operating as described in the section headed "Dechlorination Facilities (046)."
- Depress the START pushbutton on MCC-59 for Pump Nos. DCL-1 and 2.

b. SHUTDOWN

- Depress the STOP button on MCC-59 for Pump Nos. DCL-1 and 2.

NOTE

If maintenance is to be performed on the pump, open the circuit breaker in MCC-59 and move the ON-OFF switch at the unit to the OFF, position and engage the locking device. Follow approved **Lockout/Tagout** procedures (See Chapter VI, Safety).

(4) MONITORS AND ALARMS

An operational indicating light and an elapsed time meter for each pump is provided on MCC-59. Alarms consist of low discharge pressure, low seal water pressure, and pump failure.

The Remote Transmission Units in the Filter Building No. 1 Control Room continuously scan and transmit the condition of all alarm points to the SCADA System.

J. LAWN IRRIGATION WATER PUMPS AND IRRIGATION SYSTEM: FB1-LIP-1 AND 2

(1) DESCRIPTION

The lawn irrigation water pumps and irrigation system are provided to supply effluent water for lawn irrigation. Effluent water is available to the pump suction as follows (see Figure III-FL-FB-1):

- Strained nitrified effluent water
- Strained chlorinated or nonchlorinated effluent water

NOTES

The Lawn Irrigation System is not normally used at this time due to the condition of the piping and distribution system (Sept. 1991).

The use of nitrified effluent water for lawn irrigation may not comply with permit requirements and this mode of operation should not be used without approval of permitting authorities.

The Lawn Irrigation Water Pumping Equipment and Irrigation System consists of two Pumps, designated FB1-LIP-1 and 2, associated drive units, the Lawn Irrigation Control Cabinet (LICC), and associated distribution piping, valves and sprinkler and spray heads.

The pumps are single-stage horizontal shaft, double suction, split case pumps driven by 100 HP motors. Each irrigation water pump has a nominal rated capacity of 780 gpm at a rated head of 230 feet, at a pump speed of 1,750 rpm (see Figure III-FL-FB-12).

The pumps are operated and controlled from the LICC located in the Filter Building Control Room, and Motor Control Center MCC-59. A lead pump selector switch is located on MCC-59.

The Lawn Irrigation Control Cabinet is provided with the following controls:

- A master power switch
- A 14-day selector dial
- A 24-hour clock dial with 1-hour increment starts
- An AUTO-MANUAL selector switch
- Eighteen station timing dials, adjustable 2 to 60 minutes

- An ON-OFF-REPEAT selector switch for each of the 18 station timing dials
- A STATION ADVANCE switch
- Station indicating lights for each of the 18 stations

(2) NORMAL OPERATION

Under normal operation, only one pump is required to provide lawn irrigation water. The second pump is provided as a standby unit.

The treatment plant site is divided into nine irrigation stations, eight of which are arranged to be automatically watered and the ninth is arranged to be manually watered. Each station is provided with various combinations of full and part circle sprinklers and sprayers to provide complete and uniform irrigation coverage of all areas. Since each station is different from each other station in area served and in type and quantity of sprinklers and sprayers, the precipitation rate for each station is also different. Precipitation rates of irrigation stations are as follows:

IRRIGATION STATIONS

STATION NUMBER	FLOW PER STATION (GPM)	PRECIPITATION RATE (IN/HR)	PRECIPITATION RATE (IN./MIN)
1	819	0.38	0.0063
2	753	0.43	0.0072
3	789	0.52	0.0087
4	740	0.42	0.0070
5	715	0.52	0.0087
6	718	0.58	0.0097
7	726	0.35	0.0058
8	948	1.55	0.0258
9	207	37.0	0.6167

When the controls on the LICC are set as described in the following example, the lawn irrigation system will water each of the eight automatic irrigation stations. Manual irrigation of Station Number 9 is discussed later. For example, assume that the lawn required 1 inch of precipitation each week and that all automatic irrigation is to be done in the evening or at night on Monday, Wednesday and Friday.

Determine individual station timer setting and set 24-hour clock and 14-day clock.
Solution:

a. INDIVIDUAL STATION TIMER SETTING

$M_w = P_r/P_s$ where, M_w = minutes per week

P_r = required precipitation, inches/week
P_s = Station precipitation, rate inches/week

Station No. 1

$$M_w = \frac{1}{0.0063} = 153.7 \text{ say } 154 \text{ minutes/week}$$

Then the Station No. 1 timer setting will be:

$$154 \frac{\text{Min.}}{\text{Wk.}} \div 3 \frac{\text{Days}}{\text{Week}} = 51.3 \text{ minutes}$$

Station No. 2

$$M_w = \frac{1}{0.0072} = 138.9 \text{ say } 139 \text{ minutes/week}$$

Then the Station No. 2 timer setting will be:

139/3 = 46.3 minutes

Station No. 3

$$M_w = \frac{1}{0.0087} = 114.9 \text{ say } 115 \text{ minutes/week}$$

Then the Station No. 3 timer setting will be:

115/3 = 38.3 minutes

Station No. 4

$$M_w = \frac{1}{0.0070} = 142.9 \text{ say } 143 \text{ minutes/week}$$

Then the Station No. 4 timer setting will be:

143/3 = 48 minutes

Station No. 5

$$M_w = \frac{1}{0.0087} = 114.9 \text{ say } 115 \text{ minutes/week}$$

Then the Station No. 5 timer setting will be:

115/3 = 38.3 minutes

Station No. 6

$$M_w = \frac{1}{0.0097} = 103 \text{ /week}$$

Then the Station No. 6 timer setting will be:

103/3 = 34.3 minutes

Station No. 7

$$M_w = \frac{1}{0.0058} = 172.4 \text{ say } 175 \text{ minutes/week}$$

Then the Station No. 7 timer setting will be:

175/3 = 58.3 minutes

Station No. 8

$$M_w = \frac{1}{0.0258} = 38.75 \text{ say } 39 \text{ minutes/week}$$

Then the Station No. 8 timer setting will be:

39/3 = 13 minutes

Total time for irrigation on each of 3 days per week is:

51.3 + 46.3 +38.3 + 50 + 38.3 + 33.3 + 58.3 + 13 = 328.8 minutes = 5.5 hours

b. Set the 24-hour clock for 6:00 P.M.

c. Set the 14-day clock for Monday, Wednesday and Friday in the first and second week on the dial. Because of the high precipitation rate of the irrigation equipment in Station No. 9, the station is arranged to be manually irrigated from the LICC as described under "Alternate Operation". The minimum setting on the control cabinet is 2 minutes. Therefore, each time Station No. 9 is irrigated, 2 minutes times 0.6167 in./min., or 1.2334 inches of precipitation will be applied to the planters which comprise the station.

(3) START-UP AND SHUTDOWN PROCEDURES

To start up and shut down the lawn irrigation water pumps and irrigation system, use the following procedures.

a. START-UP

- Open the valve in the pump seal water line which permits water from the pump discharge to flow to the pump seals.
- Make sure that the associated effluent water strainer is in operation.
- Open the manually operated suction and discharge butterfly valves for the selected pump.
- Select either FB1-LIP-1 or FB1-LIP-2 as the operating pump by placing the lead pump selector switch on MCC-59 to the selected pump position.
- Place the master power switch on the LICC in the ON position.
- On the LICC set the eight station timing dials, the 24-hour clock dial and the 14-day selector dial as described hereinbefore under "Normal Operation".
- Place the ON-OFF-REPEAT selector switch for Station Nos. 1 thru 8 in the ON position and for Station Nos. 9 thru 18 in the OFF position.
- Place the AUTO-MANUAL selector switch in the AUTO position.

NOTE

When the 14-day and the 24-hour clocks initiate an irrigation sequence, those stations with the associated ON-OFF-REPEAT selector switch in the ON position will be irrigated for the time set on the associated station timing dials. Those stations with the selector switch in the OFF position will be skipped. Those stations with the selector switch in the REPEAT position will automatically be irrigated a second time during an irrigation sequence. After all selected stations have been irrigated, the lawn irrigation water pumps will shut down until another sequence is initiated by the 14-day and 24-hour clocks.

b. SHUTDOWN

- Place the master power switch in the OFF position.

NOTES

When the master power switch is in the OFF position, all output power from the LICC is shut down, however, the 14-day and 24-hour clocks will continue to operate.

If maintenance is to be performed on a lawn irrigation water pump, open the associated circuit breaker on MCC-59 and place the ON-OFF switch at the unit in the OFF position and engage the locking device. Follow approved **Lockout/Tagout** procedures (See Chapter VI, Safety).

(4) ALTERNATE OPERATION

When the AUTO-MANUAL selector switch on the LICC is in the MANUAL position, the lawn irrigation water pumps will start up and irrigate each zone which has its associated ON-OFF-REPEAT selector switch in the ON position for the time set on the individual station timing dials.

(5) MONITORS AND ALARMS

Operational indicating lights and an elapsed time meter for each pump is provided on MCC-59 and operational indicating lights are provided adjacent to the LICC for each pump.

The LICC is provided with a station indicator which shows station in operation.

A pressure switch is provided in the 8-inch lawn irrigation water header. Audible and visual alarm indication is provided on the Filter Building Panel-Miscellaneous Section for high and low pressure. The pump will also shut down on high pressure.

The Remote Transmission Units in the Filter Building No. 1 Control Room continuously scan and transmit the condition of all alarm points to the computer logger in the Process Control Room in the Main Pumping Station. All alarms are received and displayed by the computer logger.

K. FILTER BACKWASH WATER PUMPS: FB1-BWP-1, 2 AND 3, AND FB2-BWP- 4, 5 AND 6

(1) DESCRIPTION

The filter backwash water pumps are provided to supply effluent water for filter nitrogen release and full backwash cycles. Effluent water is available to the pump suction for FB1-BWP-1, 2 and 3 from the Final Effluent Channel (see Figure III-FL-FB-1) and for FB2-BWP-4, 5 and 6 from the Filter Effluent Conduit (see Figure III-FL-FB-3).

The Filter Backwash Water Pumping Equipment consists of six Pumps, three in Filter Building No. 1 designated FB1-BWP-1, 2 and 3 and three in Filter Building No. 2, designated FB2-BWP-4, 5 and 6, associated drive units and controls.

The pumps are single-stage horizontal shaft, double suction, split case pumps driven by 200 HP motors. Backwash Water Pump Nos. FB1-BWP-1, 2 and 3 have a nominal rated capacity of 8,400 gpm at a rated head of 73 feet, at a pump speed of 1,175 rpm (see Figure III-FL-FB-13). Backwash Water Pump Nos. FB2-BWP-4, 5 and 6 have a nominal rated capacity of 8,400 gpm at a rated head of 72 feet, at a pump speed of 885 rpm (see Figure III-FL-FB-14).

Pumps FB1-BWP-1, 2 and 3 are operated and controlled from MCC-58 and the Filter Building Panel-Filter Section (FBPFS). Pumps FB2-BWP-4, 5 and 6 are operated and controlled from MCC-86, the Filter Building No. 2 Filter Control Panel and the Filter Building No. 1 Filter Control Console. Pumps FB1-BWP-1,2 and 3 are provided with OFF/TEST-AUTO selector switches, operational indicating lights and elapsed time meters on Motor Control Center MCC-58. Pumps FB2-BWP-4, 5 and 6 are provided with LOCAL-OFF-REMOTE selector switches, operational indicating lights and elapsed time meters on Motor Control Center MCC-86. Each Pump is provided with an ON-OFF switch with a locking device for the OFF position and a START push button at the unit. Refer to the section headed "Denitrification Filters" for a description of the associated filter controls.

(2) NORMAL OPERATION

Under normal operation, Backwash Pump FB1-BWP-1 serves the East Filter Group (Filter Nos. 1-10) and FB1-BWP-3 serves the West Filter Group (Filter Nos. 11-20). Pump FB1-BWP-2 is a standby unit and can serve the East or West Filter Group (Filter Nos. 1-20). Backwash Pump FB2-BWP-4 serves the East Filter Group (Filter Nos 21-26) and Pump FB2-BWP-6 serves the West Filter Group (Filter Nos. 31-36) in Filter Building No. 2. Pump FB2-BWP-5 is a standby unit and can serve the East or West Filter Group (Filter Nos. 21-26 or 31-36).

Under normal operation, the pumps are automatically started and stopped by controls in the FBPFS Filter Control Console in Filter Building No. 1 and the Filter Control Panel in Filter Building No. 2 (refer to the section headed "Denitrification Filters").

(3) START-UP AND SHUTDOWN PROCEDURES

To start up and shut down the filter backwash water pumps, use the following procedures:

a. START-UP

- Open the valve in the pump seal water line which permits water from the pump discharge to flow up to the pump seals.
- Open the manually operated 24-inch pump suction butterfly valve in the line from the Final Effluent Channel or Filter Effluent Conduit.
- Open the manually operated 20-inch pump discharge butterfly valve.

- Make sure that Rate Controllers MRC-18 and 19 for FB1-BWP-1, 2 and 3 and FE-53 and 54 for FB2-BWP-4, 5 and 6 are set as described in the subsection headed "Rate Controller Equipment".
- Make sure that the controls on the FBPFS in Filter Building No. 1 and on the Filter Control Panel in Filter Building No. 2 are set as described in the section headed "Denitrification Filters".
- Place the OFF/TEST-AUTO selector switch on MCC-58 for Filter Building No. 1 and place the LOCAL-OFF-REMOTE selector switch on MCC-86 in the REMOTE position for Filter Building No. 2.

b. SHUTDOWN

- Place the OFF/TEST-AUTO selector switch on MCC-58 in the OFF/TEST position and place the LOCAL-OFF-REMOTE selector switch on MCC-86 in the OFF position.

NOTE

If maintenance is to be performed on the pump, open the circuit breaker on MCC-58 and/or MCC-86, move the ON-OFF switch at the unit to the OFF position and engage the locking device. Follow approved **Lockout/Tagout** procedures (See Chapter VI, Safety).

(4) MONITORS AND ALARMS

Each pump is provided with operational indicating lights and an elapsed time meter on MCC-58 for FB1-BWP-1, 2 and 3 and on MCC-86 for FB2-BWP-4, 5 and 6 and operational indicating lights on the FBPFS and Filter Control Console in Filter Building No. 1 and on the Filter Control Panel in Filter Building No. 2.

A high pressure alarm switch is provided on the 20-inch discharge of each filter backwash water pump. Audible and visual alarm indication is provided for each pump on the FBPFS and Filter Control Console in Filter Building No. 1 and on The Filter Control Panel in Filter Building No. 2. Each pump will also shut down on high pressure.

Audible and visual alarm indication is provided for each pump on the FBPFS and Filter Control Console in Filter Building No. 1 and on The Filter Control Panel in Filter Building No. 2 for pump failure. The contacts which are provided to initiate the pump failure alarm are as follows:

- Excessive Vibration Relay - Motor
- Excessive Vibration Relay - Pump
- Phase Failure Phase Reversal Relay
- Ground Sensing Relay
- High Pump Discharge Pressure
- Electrical Overload

Alarm signals generated in Filter Building No. 2 and displayed on the Filter Control Panel are transmitted by a programmable controller to Filter Building No. 1 where audible and visual alarm indication is provided on the Filter Control Console. The computer work station on the Filter Control Console displays and prints all alarm indications for Filter Building No. 2 on the printer.

Remote Transmission Units in the Filter Building No. 1 Control Room, continuously scan and transmit the condition of all status and alarm points to the computer logger in the Process Control Room in the Main Pumping Station for all six backwash water pumps. Status and alarm signals are received and displayed by the computer logger.

L. FILTER DRAIN PUMPS: FB-DP-1 AND 2

(1) DESCRIPTION

Two filter drain pumps, designated FB-DP-1 and 2, are located in Filter Building No. 2 and are provided to completely dewater Denitrification Filters No. 21-26 and 31-36. FB-DP-1 dewaters Filters 21-26 and FB-DP-2 dewaters Filters 31-36.

A 6-inch drain pipe transfers water from the 8-inch drain pipe at each filter, through the drain pump and into the backwash water drain pipe (see Figures III-FL-FB-3 and III-FL-DF-3)

Each drain pump is a single stage, progressive cavity pump with a design flow of 300 gpm at 20 psi and a speed of 350 rpm. Each motor is 10 hp, 3 phase, 60 Hertz, 460 volts and 1800 rpm. A 350 rpm V-belt is also provided.

(2) NORMAL OPERATION

Each pump is provided with a START push button and ON/OFF-LOCKOUT, high pressure discharge and no flow switches located at the pump. Under normal operation, the ON/OFF-LOCKOUT switch will be set to the ON position and the START push button will be pressed. The pump will run continuously until the filters are completely dewatered and the no-flow switch automatically turns off the pump.

(3) START-UP AND SHUTDOWN PROCEDURES

To start-up and shut down of each drain pump use the following procedures:

a. START-UP

- Shutdown the filter(s) to be dewatered as described in the shutdown process in the section titled "Denitrification Filters".
- Verify that the effluent water system is operating and open the valves required to supply seal water to the pump and purge water to the pump discharge pressure switch diaphragm seal.
- Open the manually operated valve in the pump suction and discharge lines.
- Open the manually operated 6-inch and 8-inch drain valves at the filter(s) to be dewatered.
- Close the circuit breaker at Motor Control Center MCC-86 in Filter Building No. 2 for the drain pump(s) needed to dewater the filter(s).

- Set the ON/OFF-LOCKOUT switch located at the pump on ON.
- Press the START push button at the pump.

b. SHUTDOWN

- Set the ON/OFF-LOCKOUT switch at the pump on OFF.
- Close the manually operated drain valves at the filter(s).
- Close the manually operated valves in the pump suction and discharge lines

NOTE

If maintenance is to be performed on the pump, open the circuit breaker at MCC-86, set the ON/OFF-LOCKOUT switch at the pump on OFF and engage the locking device. Follow approved **Lockout/Tagout** procedures (See Chapter VI, Safety).

(4) MONITORS AND ALARMS

Each pump is provided with running indicators lights at MCC-86 and at the Filter Control Panel located in Filter Building No. 2. An elapsed time meter and alarm light are also provided at MCC-86. Alarms for pump failure and no flow in each pump are provided at the Annunciator on the Filter Control Panel located in Filter Building No. 2.

Remote Transmission Units in the Filter Building No. 1 Control Room continuously scan and transmit the condition of all status and alarm points to the computer logger in the Process Control Room in the Main Pumping Station for both drain pumps. Status and alarm points are received and displayed by the computer logger.

M. FILTER BACKWASH AIR BLOWER EQUIPMENT: FB1-BWB-1 AND 2 AND FB2-BWB-3, 4 AND 5

(1) DESCRIPTION

The backwash air blowers are provided to supply air for the full air-water backwash cycles of the Denitrification Filters Nos. 1-20, 21-26 and 31-36.

The filter backwash air blower equipment consists of two Backwash Air Blowers for Denitrification Filters Nos. 1-20 designated FB1-BWB-1 and FB1-BWB-2 and three Backwash Air Blowers for Denitrification Filters Nos. 21-26 and 31-36 designated FB2-BWB-4 and FB2-BWB-5, associated drive units and controls. The Backwash Air Blower designated FB2-BWB-3 is a standby unit which can supply air to Denitrification Filters Nos. 21-26 and 31-36. Piping is available to allow Backwash Air Blower FB2-BWB-3 to serve Denitrification Filters Nos. 1-20 but this requires a completely manual operation.

The air blowers are vertical rotary positive displacement blowers driven by 350 HP constant speed motors. Each filter backwash air blower is designed for operation over the following ranges of atmospheric conditions:

- Range of inlet air temperature: 32 to 110 degrees F

- Range of barometric pressure: 14.2 to 15.2 psia
- Range of inlet pressure: 13.5 to 14.7 psia

Each filter backwash air blower has a rated capacity of 6,800 cfm of air at a rated discharge pressure of 9.5 psig when the inlet air temperature is 100 degrees F, and the barometric pressure is 14.4 psia.

Backwash Air Blowers FB1-BWB-1 and 2 are operated and controlled from the Backwash Air Blower Control Center MCC-57 and the Filter Building No. 1 Panel-Filter Section (FBPFS). Backwash Air Blowers FB2-BWB-3, 4 and 5 are operated and controlled from the Filter Building No. 2 Motor Control Center MCC-85, the Filter Control Panel in Filter Building No. 2 and the Filter Control Console in Filter Building No. 1. Blowers FB1-BWB-1 and 2 are provided with an OFF/TEST-AUTO selector switches, operational indicating lights, elapsed time meter, and an ammeter on MCC-57 and an ON-OFF switch with a locking device for the OFF position and a TEST push button at the unit. Blowers FB2-BWB-3, 4 and 5 are provided with LOCAL-OFF-REMOTE selector switches, operational indicating lights, elapsed time meters and an ammeter on MCC-85 and an ON-OFF switch with a locking device for the OFF position and a START push buttons at the unit. Refer to the section headed "Denitrification Filters" for a description of the blower controls.

(2) NORMAL OPERATION

Under normal operation, two blowers for Denitrification Filter Nos. 1-20 and two blowers for Denitrification Filter Nos. 21-26 and 31-36 are automatically started and stopped by controls in the FBPFS and Filter Control Console in Filter Building No. 1 and Filter Control Panel in Filter Building No. 2 (refer to the section headed "Denitrification Filters). A Third blower in Filter Building No. 2 is provided as a standby unit primarily for Denitrification Filter Nos. 21-26 and 31-36.

(3) START-UP AND SHUTDOWN PROCEDURES

To start up and shut down the filter backwash air blowers use the following procedures:

a. START-UP

- For Filter Building No. 1 open the manually operated 14-inch blower discharge butterfly valves.
  (see Figure III-FL-FB-1). For Filter Building No. 2 open the manually operated 16-inch blower discharge butterfly valves in Filter Building No. 2 (see Figure III-FL-FB-3).
- Make sure that the controls on the FBPFS and Filter Control Console in Filter Buildings No. 1 and No. 2 are set as described in the section headed "Denitrification Filters".
- Place the OFF/TEST-AUTO selector switch on MCC-57 in the AUTO position for Filter Building No. 1 and place the LOCAL-OFF-REMOTE selector switch on MCC-85 in the REMOTE position for Filter Building No. 2.

b. SHUTDOWN

Place the OFF/TEST-AUTO selector switch on MCC-57 in the OFF/TEST position for Filter Building No. 1 and place the LOCAL-OFF-REMOTE selector switch on MCC-85 in the OFF position for Filter Building No. 2.

NOTE

If maintenance is to be performed on a blower, open the circuit breaker on Motor Control Center MCC-57 and MCC-85 and place the ON-OFF switch at the unit in the OFF position and engage the locking device. Follow approved **Lockout/Tagout** procedures (See Chapter VI, Safety).

(4) MONITORS AND ALARMS

Each blower is provided with operational indicating lights, an elapsed time meter and an ammeter on MCC-57 for FB1-BWB-1 and 2 and on MCC-85 for FB2-BWB-3, 4 and 5 and status indicating lights on the FBPFS and the Filter Control Console in Filter Building No. 1 and the Filter Control Panel in Filter Building No. 2.

A high and low pressure alarm switch is provided in the discharge of each filter backwash air blower. Audible and visual alarm indication is provided for blower FB2-BWB-1 and 2 on the FBPFS annunciator in Filter Building No. 1 and for blowers FB2-BWB-3, 4 and 5 on the Filter Control Panel in Filter Building No. 2. Each blower will also shut down on high pressure.

Audible and visual alarm indication is provided for each blower on the FBPFS in Filter Building No. 1 and on the Filter Control Panel in Filter Building No. 2 for blower failure. The contacts which are provided to initiate the blower failure alarm are as follows:

- Excessive Vibration Relay - Motor
- Excessive Vibration Relay - Blower
- Phase Failure Phase Reversal Relay
- High Blower Discharge Pressure
- Time Delay Relay (for low discharge air pressure during blower start up)
- Electrical overload
- Excessive Motor Winding Temperature (FB2-BWB-3,4 and 5 only)

The Remote Transmission Units in the Filter Building No. 1 Control Room continuously scan and transmit the condition of all status and alarm points to the computer logger in the Process Control Room in the Main Pumping Station for all five blowers. Status and signals are received and displayed by the Computer Logger.

N. SUMP PUMPING EQUIPMENT: FB1-SP-1, 2, 3 AND FB2-SP-5, 6, 9

The sump pumping equipment in the Filter Building No. 1, designated FB1-SP-1, 2 and 3 and in Filter Building No. 2, designated FB2-SP-5, 6 and 9 consist of sump pumps, drive motors and associated control panels, cover plates and frame, and sump level controls.

The sump pumping equipment located in the Filter Building No. 1 is as follows:

- Sump Pump FB1-SP-1, at the west and near Column Line 1B
- Sump Pump FB1-SP-2, near Column Line 14F
- Sump Pump FB1-SP-3, at the east and near Column Line 17B

The sump pumping equipment located in the Filter Building No. 2 is as follows:

- Sump Pump FB2-SP-5, at the east end near Column Line C
- Sump Pump FB2-SP-6, at the southeast corner of Filter Influent Meter Vault
- Sump Pump FB2-SP-9, at the east end near Column B

NOTE

Sump Pumps Nos. FB2-SP-7 and 8 are located in the Denitrification Filters Gallery and are discussed under the section headed "Denitrification Filters".

For a complete discussion of the Sump Pumping equipment, operation and control, refer to the section headed "Sump Pumping Equipment".

O. LIQUID POLYMER STORAGE AND FEED EQUIPMENT

(1) GENERAL

The liquid polymer storage and feed equipment is provided to store full strength liquid polymer, to automatically make up batches of activated polymer solution and to feed polymer to the locations as follows (see Figure III-FL-FB-15):

- Carbonaceous Reactors Effluent Conduit
- Nitrification Reactors Effluent Conduit
- Nitrification Final Tanks Effluent Channel

The liquid polymer storage and feed equipment consists of the following major components:

- Two Liquid Polymer Storage Tanks FB1-PT-1 and FB1-PT-2
- Two Storage Tank Mixers FB1-PTM-1 and FB1-PTM-2
- Liquid Polymer Transfer Pump FB1-PTP-1
- Two Liquid Polymer Activation Units FB1-PAU-1 and FB1-PAU-2
- Two Activated Polymer Storage Tanks FB1-AT-1 and FB1-AT-2
- Two Polymer Solution Feed Pumps FB1-PFP-1 and FB1-PFP-2

Liquid polymer is delivered by tank truck and stored in Filter Building No. 1 in two 3,000 gallon storage tanks. Each tank is equipped with a mixer to maintain the full strength liquid polymer in a homogeneous state. A transfer pump is provided to transfer liquid polymer from one storage tank to the other. Two liquid polymer activation units are provided. Each unit is provided to automatically mix the full strength liquid polymer from the storage tanks with activator solution and water to provide batches of activated polymer which is diluted to a desired solution concentration. The activated polymer solution is stored in an associated 500 gallon storage tank (one 500 gallon activated polymer storage tank is provided for each

polymer activation unit). The batching operation is started and stopped by level controls mounted on the activated polymer storage tanks.

The polymer solution feed pumps are provided to feed the activated polymer solution to the locations listed above.

(2) LIQUID POLYMER STORAGE TANKS: FB1-PT-1 AND FB1-PT-2

a. DESCRIPTION

Each 3,000 gallon liquid polymer storage tank is of welded steel construction with dished top and bottom. Each tank is lined with a protective coating to protect against corrosion from the polymer. Each tank is seven feet in diameter with an overall height of twelve feet.

Each tank is provided with a desiccant type vent air dryer to prevent moisture contamination of the liquid polymer. The dryer is provided with an indicator with changes from blue to pink when the desiccant is exhausted and requires replacing. The end of the drier is fitted with a breaker valve which provides pressure and vacuum relief.

Each tank is provided with a top access pressure relief manhole cover which will relieve internal tank pressures greater than 3 inches of water column.

b. MONITORS AND ALARMS

Liquid level in the liquid polymer storage tanks FB1-PT-1 and FB1-PT-2 is measured by differential pressure Transmitters OG-49 and OG-50, respectively. The tank level is indicated on the Filter Building Panel-Chemical Handling Section (FBPCHS) on Indicators GF-17 and GF-18. The liquid polymer storage tank level is transmitted to the Process Monitoring Terminal Cabinet and to the Computer Logger. At a preset low tank level, the storage tank mixers will automatically be shut down and an audible and visual alarm is provided on the Filter Building Panel-Miscellaneous Section annunciator.

The Remote Transmission Units in the Filter Building No. 1 Control Room continuously scan and transmit the condition of all alarm points to the computer logger in the Process Control Room in the Main Pumping Station. All alarms are received and displayed by the computer logger.

Indicating lights on the Filter Building Panel-Chemical Handling Section and Polymer Unloading Panel are provided to indicate when a tank is full.

(3) STORAGE TANK MIXERS: FB1-PTM-1 AND FB1-PTM-2

a. DESCRIPTION

Each 3,000 gallon storage tank is provided with a top-mounted mixer to keep the liquid polymer thoroughly mixed. The mixers operate at approximately 68 rpm and are driven by 1-1/2 hp motors.

b. NORMAL OPERATION

A HAND-OFF-AUTO selector switch is provided for each mixer on the Activated Polymer Feed Pump Control Panel (APFPCP). Under normal operation, when the HAND-OFF-AUTO selector switch for each unit is in the AUTO position, each unit will operate intermittently, actuated by a timer in the APFPCP. Each timer has an adjustable range of 10 minutes to 10 hours.

c. START-UP AND SHUTDOWN PROCEDURES

To start up and shut down the mixers use the following procedures:

1. Start-Up
   - Close the circuit breaker on MCC-59A.
   - Place the ON-OFF switch at the unit in the ON position.
   - Set the timer for each mixer to the desired mixing time. Recommended mixing time is one hour in every 10 hours.
   - Place the HAND-OFF-AUTO selector switch for each unit in the AUTO position.

2. Shutdown
   - Place the HAND-OFF-AUTO selector switch for each unit in the OFF position.

NOTE

The mixers will run continuously when the HAND-OFF-AUTO selector switch is in the HAND position.

If maintenance is to be performed on a mixer, open the circuit breaker on MCC-59A, move the ON-OFF switch at the mixer to the OFF position and engage the locking device. Follow approved **Lockout/Tagout** procedures (See Chapter VI, Safety).

d. MONITORS AND ALARMS

An operational indicating light and an elapsed time meter for each mixer is provided on MCC-59A. At preset low storage tank liquid level each mixer will automatically shut down. An audible and visual alarm is provided on the Filter Building Panel-Miscellaneous Section annunciator.

The Remote Transmission Units in the Filter Building No. 1 Control Room continuously scan and transmit the condition of all alarm points to the computer logger in the Process Control Room in the Main Pumping Station. All alarms are received and displayed by the computer logger.

(4) POLYMER TRANSFER PUMP FB1-PTP-1

a. DESCRIPTION

The Polymer Transfer Pump, designated FB1-PTP-1, is provided to transfer liquid polymer from one storage tank to the other. The unit is a gear type pump driven by a 3 HP motor through a gear reducer. The pump is rated at 25 gpm at a discharge pressure of 50 psi when pumping liquid polymer with a viscosity of 11,000 to 12,000 SSU and a specific gravity of 1.03.

b. NORMAL OPERATION

When the START push button is depressed the pump will operate continuously.

c. START-UP AND SHUTDOWN PROCEDURES

To start up and shut down the polymer transfer pump use the following procedures:

1. Start-Up
   - Close the circuit breaker on MCC-59A
   - Depress the START push button at the unit

2. Shutdown
   - Depress the STOP push button at the unit

NOTE

If maintenance is to be performed on the polymer transfer pump, open the circuit breaker on MCC-59A, push the STOP button and engage the locking device. Follow approved **Lockout/Tagout** procedures (See Chapter VI, Safety).

d. MONITORS

An operational indicating light for the polymer transfer pump is provided on MCC-59A.

(5) LIQUID POLYMER ACTIVATION EQUIPMENT: FB1-PAU-1 AND FB1-PAU-2

a. DESCRIPTION

The liquid polymer activation equipment is provided to automatically prepare a dilute activated liquid polymer solution by mixing full strength liquid polymer from the liquid polymer storage tanks discussed hereinbefore with a preset amount of activator solution and water to supply an activated liquid polymer solution having a full strength polymer concentration in the range of 0.25 percent to 1.0 percent.

Each liquid polymer activation unit consists of the following major components (see Figure III-FL-FB-15):

- One activator supply tank
- One activator metering pump

- One polymer pump
- One water pump
- One in-line mixer
- One Control Panel

b. NORMAL OPERATION

Each liquid polymer activation unit is operated and controlled from the control panel mounted on the unit. AUTO-OFF-MANUAL selector switches for the polymer pump and water pump are provided on each control panel (the drive unit for the polymer pump is also arranged to drive the activator metering pump).

Under normal operation, when the AUTO-OFF-MANUAL selector switches are in the AUTO position, the liquid polymer activation unit will automatically start up and prepare the dilute activated liquid polymer solution and automatically shut down based on a signal from liquid level probes in the Activated Polymer Storage Tank.

c. START-UP AND SHUTDOWN PROCEDURES

To start up and shut down the liquid polymer activation units use the following procedures:

1. Start-Up
   - Open the manually operated valves between the liquid polymer tank and liquid polymer pump, and between the activator solution tank and activator pump.
   - Close the circuit breakers on MCC-59A.
   - Place the two ON-OFF power switches on the liquid polymer activation unit control panel in the ON position.
   - Place the AUTO-OFF-MANUAL selector switches for polymer and water on the liquid polymer activation unit control panel to the AUTO position.
   - Push the START push button on the liquid polymer activation unit control panel.

2. Shutdown
   - Push the STOP button on the liquid polymer activation unit control panel. An adjustable 0-60 second time delay relay controls time of shut down.

d. ALTERNATE OPERATION

The polymer activation unit may be operated manually by placing the AUTO-OFF-MANUAL selector switches for the polymer and water pumps in the MANUAL position. When the selector switches are in the MANUAL position, the unit will make up dilute activated liquid polymer solution continuously.

CAUTION

When the pump selector switches are in the MANUAL position, the liquid level probes in the activated polymer storage tank will not automatically shut down the unit and care should be taken not to OVERFLOW the activated polymer storage tank.

e. MONITORS AND ALARMS

Each liquid polymer activation unit is provided with operational indicating lights on its associated unit mounted control panel and on the Filter Building Panel-Chemical Handling Section (FBPCHS).

The control panel on each liquid polymer activation unit contains visual indication for No Polymer Flow Alarm and Shutdown, No Water Flow Alarm and Shutdown and No Activator Flow Alarm and Shutdown. The annunciator panel on the Filter Building Panel-Miscellaneous Section (FBPMS) contains audible and visual alarm indication for each liquid polymer activation unit for shut down (an operator must go to the unit to determine cause of shut down).

The Remote Transmission Units in the Filter Building No. 1 Control Room continuously scan and transmit the condition of all alarm points to the computer logger in the Process Control Room in the Main Pumping Station. All alarms are received and displayed by the computer logger.

(6) ACTIVATED POLYMER STORAGE TANKS: FB1-AT-1 AND FB1-AT-2

a. DESCRIPTION

Each 500 gallon activated polymer storage tank is of welded steel construction with open top and dished bottom. Each tank is lined with a protective coating to protect against corrosion from the activated polymer. Each tank is four feet in diameter with a six foot side wall height

Each tank is provided with liquid level probes to initiate automatic operation of the liquid polymer activator units as described hereinbefore.

(7) POLYMER SOLUTION FEED PUMPS: FB1-PFP-1, 2 AND 3

a. DESCRIPTION

The Polymer Solution Feed Pumps consist of three polymer feed pumps (FB1-PFP-1, 2 and 3). Each polymer feed pump is furnished with a variable speed drive and controller for automatic or manual operation.

Discharge piping is routed to the Nitrification Stage Final Sedimentation Tanks Effluent Channel, Carbonaceous Reactors Effluent Channel and Nitrification Reactors Effluent Channel for polymer solution distribution.

b. NORMAL OPERATION

Under normal operation, polymer feed pumps automatically feed a predetermined neat polymer dosage based upon the selected flow signal (Carbonaceous Stage Flow or Nitrification Stage Flow) and the set point entered on the Ratio Set Point Station.

Ratio Set Point is used to set automatic polymer dosage at a predetermined rate. Given that the maximum capacity of each polymer feed pump is 72,000 GPD, the minimum allowable diluted polymer solution concentration, DP_c, is computed as follows:

$$DP_c = ([Q \times P_n] \div 72{,}000)\ 100\%$$

where:

Q = maximum flow rate,
carbonaceous = 140 MGD
nitrification = 120 MGD

P_N= neat polymer dosage rate in MG/l
divided by SP.GR. of the polymer
i,e, MG/l ÷ SP.GR

When the Ratio Set Point of 1.0, polymer will be dosed at the computed minimum allowable diluted polymer solution concentration, DP_c. If the diluted polymer solution is made up at some higher concentration, the Ratio Set Point will be computed as follows:

$$\text{Set Point} = DP_c \div \text{Desired Concentration}$$

With the Ratio Set Point selected, pumps speed is automatically varied to maintain this ratio through all Carbonaceous and Nitrification flow rates.

Control devices for each polymer feed pump are located on the Polymer Feed Pump D-C SCR Drive Control Panel (PFPCP) as follows:

- Start-Stop Push Buttons provided for each pump unit:

  These push buttons are provided to start and stop polymer feed pump operation.

- HAND-OFF-AUTO Selector Switch provided for each pump unit:

  When in the AUTO position, the speed of the associated pump unit is automatically controlled based on the selected flow signal and Ratio Set Point. When in the HAND position, speed Adjust Potentiometer. When in the OFF position, the associated pump unit will not operate.

- Carbonaceous/Nitrification Stage Flow Rate Selected Switch provided for each pump unit:

  When in the carbonaceous position, flow signal from the Carbonaceous Reactors is used to regulate pump speed. When in the nitrification position, flow signal from the Nitrification Reactors is used to regulate pump speed.

- Ratio Adjust Potentiometer provided for each pump unit:

  When in the automatic mode, the Ratio Adjust Potentiometer is used to adjust the desired polymer feed concentration.

- Manual Speed Adjust Potentiometer provided for each pump unit:

  When in the manual mode, pump speed is adjusted by turning the Manual Speed Adjust Potentiometer.

- Lockout Stop Switch provided for each pump unit:

  If the Lockout Stop Switch is depressed during normal operation, the associated pump will stop. The pump will restart when the Lockout Stop Switch is pulled back out to the ON position.

- Reset Push Button provided for each pump unit:

  The pump will stop and become locked out upon a drive fault trip, motor over temperature, or high pump discharge pressure. To restart the pump, the fault must be cleared, and Reset push button depressed.

c. START-UP AND SHUTDOWN PROCEDURES

To start-up and shutdown the polymer storage and handling equipment, use the following procedures:

1. Start-up
   - Make sure power is supplied to the polymer storage and handling components to be operated
   - Open appropriate pump supply and discharge valves
   - Choose flow rate signal using the Carbonaceous/Nitrification Stage Selector Switches
   - Adjust polymer feed rates using the Ratio Adjust Potentiometer
   - Pull Lockout Stop Switch out to the ON position and place HAND-OFF-AUTO Selector Switch in the AUTO position
   - To start the pump, depress the START push button

2. Shutdown
   - To stop polymer feed, depress the STOP push button or place the HAND-OFF-AUTO Selector Switch in the OFF position.

NOTE

Depress the Lockout Stop Switch and disconnect device if maintenance is to be performed on the equipment.

d. ALTERNATE OPERATION

Each Polymer Feed Pump many be manually operated by adjusting its Manual Speed Adjust Potentiometer. To operate in this mode, pull the Lockout Stop Switch out to the ON position and place the HAND-OFF-AUTO Selector Switch in the HAND position. To start the pump, depress the START push button and adjust the Manual Speed Adjust Potentiometer to attain desired pumping speed.

Depress the STOP push button or place the HAND-OFF-AUTO Selector Switch in the OFF position to stop pump operation.

e. MONITORS AND ALARMS

Each pump unit is provided with meters and indicating lights on the Polymer Feed Pump D-C SCR Drive Central Panel (PFPCP) as follows:

- Ratio Indicating Meter (0-1.0)
- Speed Indicating Meter (0-350 rpm)
- Motor Ammeter (0-25 amps)
- Elapsed Time Meter
- Red Run Indicating Light
- Amber Fault Trip Indicating Light

The annunciator in the Filter Building Panel- Miscellaneous Section indicates "Polymer Feed System Failure." (An operator must go to the unit to determine course of shut down).

The Remote Transmission Units in the Filter Building No. 1 Control Room Continuously scan and transmit the condition of all alarms points to the computer logger in the Process Control Room in the Main Pumping Station. All alarms are received and displayed by the computer logger.

P. CHLORINATION EQUIPMENT

(1) GENERAL

The chlorination equipment is provided to automatically prepare a chlorine solution, from liquid chlorine (received in railroad tank cars) and effluent water. The chlorination equipment feeds the chlorine solution to the two post-aeration chlorination tanks for disinfection of the final effluent and feeds chlorine solution

to both Carbonaceous and Nitrification Return Sludge for control sludge bulking (see Figure III-FL-FB-16). Sludge bulking control is used only as needed.

NOTE

The Chlorination Equipment will be modified under Division 5H3B and at that time this section will be readdressed.

The chlorination equipment consists of the following major components:

- A chlorine unloading station
- Three Chlorine Evaporators, FB1-EV-1, 2 and 3
- Three Chlorinators, FB1-CH-1, 2 and 3
- Four Ejectors, FB1-EJ-1, 2, 3 and 4
- A Chlorine Gas Leak Detector, OG-57

In addition, provisions have been made to add a future fourth evaporator, chlorinator and ejector.

CAUTION

Chlorine is an extremely toxic and corrosive chemical. Refer to Chlorine Institute publications and to Chapter VIII-Safety for recommended handling, unloading and safety procedures.

(2) CHLORINE UNLOADING STATION

a. DESCRIPTION

The chlorine unloading station is an elevated platform which is located between the two railroad sidings provided to receive tank cars of liquid chlorine and is provided with a 1-inch liquid chlorine supply line and a 1-inch liquid chlorine standby line. Each line is provided with a shutoff valve, a pressure gauge, a pressure switch and an expansion tank with a rupture disc and pressure switch. The liquid chlorine supply line and standby line are each arranged so that not more than one tank car can be connected at a time.

Refer to publications of the Chlorine Institute for protection, connection to and unloading procedures for tank cars of liquid chlorine.

b. MONITORS AND ALARMS

The liquid chlorine supply line and liquid chlorine standby line each are provided with pressure gauges which indicate the liquid chlorine pressure.

The one-inch liquid chlorine supply line and standby line each are provided with pressure switches which initiate an alarm on high pressure. The switches have an operating range of 10-300 psig. An initial pressure setting of 225 psig is recommended.

The sections of the one-inch liquid chlorine supply line and standby line which may be isolated by valves are provided with rupture discs and expansion tanks as a safeguard against rupture of the line due to high pressure (see Figure III-FL-FB-16). Each disc has a rupture pressure of 400 psi. If the supply line or standby line disc ruptures, a pressure switch located above the disc will initiate an audible and visual alarm on the annunciator panel on the Filter Building Chlorination System Panel (FBCSP). The pressure switches have an operating range of 10-200 psig. The recommended setting is 20 psig.

The liquid chlorine header inside the Filter Building is provided with Pressure Transmitter OG-56, which transmits the pressure to Indicator GM-3 on the Filter Building Chlorination System Panel (see Figure III-FL-FB-16). Audible and visual alarms for high and low liquid chlorine pressure are initiated at the annunciator on the FBCSP. Initial pressure settings of 225 psig for high pressure and 40 psig for low pressure are recommended.

A Batch Counter, designated GM-8 on the Filter Building Chlorination System Panel is provided to indicate the quantity of chlorine which has been used from the tank car. As the car approaches the empty condition, the counter will activate an alarm on the Filter Building Chlorination System Panel Annunciator.

The Remote Transmission Units in the Filter Building No. 1 Control Room continuously scan and transmit the condition of all alarm points to the computer logger in the Process Control Room in the Main Pumping Station. All alarms are received and displayed by the computer logger.

Total chlorine gas flow is indicated on Totalizer GM-6 and recorded on Recorder GM-7 on the Filter Building Chlorination System Panel. The total chlorine gas flow is gas transmitted to the Process Monitoring and Terminal Cabinet Addition and to the computer logger in the Process Control Room.

(3) CHLORINE EVAPORATORS: FB1-EV-1, 2 AND 3

a. DESCRIPTION

The chlorine evaporators are provided to automatically vaporize and heat liquid chlorine to super heated gaseous chlorine (see Section 42 of the Division 4H6 Contractor's O&M Manuals).

The equipment consists of three Chlorine Evaporators, designated FB1-EV-1, 2 and 3. Each evaporator has a rated capacity of 8,000 pounds of chlorine per day.

Each evaporator consists of a chlorine vaporization chamber surrounded by a hot water jacket and temperature controls.

b. NORMAL OPERATION

Under normal operation, each chlorine evaporator will automatically vaporize and heat liquid chlorine to super heated gaseous chlorine in response to chlorine demand (see the subsection

headed "Chlorinators and Ejectors, FB1-CH-1, 2 and 3 and FB1-EJ-1, 2, 3 and 4). As demand increases, vapor pressure in the vaporizing chamber decreases, vapor pressure in the vaporizing chamber increases and restricts the flow of liquid chlorine.

Under normal operation, two chlorine evaporators are required to be in service. The third unit is provided as a standby.

c. START-UP AND SHUTDOWN PROCEDURES

To start up and shut down the chlorine evaporators use the following procedures:

1. Start-Up
   - Make sure that the hot water jacket has been filled to the proper level
   - Start up the following associated equipment as described elsewhere in this section; chlorine solution water pumps, chlorinators and ejectors
   - Close the associated circuit breaker on Motor Control Center MCC-59A
   - Place the ON-OFF switch at the unit in the ON position
   - Set the temperature controls as described in Section 42 of the Division 4H6 Contractor's O&M Manual
   - Open the manually operated valves required to supply liquid chlorine to the evaporator (see Figure III-FL-FB-16)

2. Shutdown
   - Close the manually operated valves required to supply liquid chlorine to the evaporator (see Figure III-FL-FB-16)
   - Place the ON-OFF switch at the unit in the OFF position

NOTE

If maintenance is to be performed on the unit, open the associated circuit on MCC-59A and place the ON-OFF switch at the unit in the OFF position and engage the locking device. Also refer to Section 42 of the Division 4H6 Contractor's O&M Manual for procedures to remove liquid and gaseous chlorine from the unit. Follow approved **Lockout/Tagout** procedures (See Chapter VI, Safety).

d. MONITORS AND ALARMS

Each chlorine evaporator is provided with a chlorine gas pressure gauge, a chlorine gas temperature gauge, a water bath temperature gauge and a water bath liquid level gauge. A low water bath liquid level or low water bath temperature will activate an audible and visual alarm on the annunciator panel in the Filter Building Chlorination System Panel. Low water temperature will close the chlorine gas pressure reducing valve (see Figure III-FL-FB-16) preventing gas flow to the

chlorinators. The gas pressure reducing valve has a safety vent which will vent chlorine gas to the outside of the Filter Building if gas pressure exceeds 275 psig. If chlorine gas is venting a flow switch actuates an audible and visual alarm on the Filter Building Chlorination System Panel Annunciator.

The Remote Transmission Units in the Filter Building No. 1 Control Room continuously scan and transmit the condition of all alarm points to the computer logger in the Process Control Room in the Main Pumping Station. All alarms are received and displayed by the computer logger.

Each evaporator has a power ON indicating lights on the Filter Building Chlorination System Panel.

(4) CHLORINATORS AND EJECTORS: FB1-CH-1, 2 AND 3 AND FB1-EJ-1, 2, 3 AND 4

a. DESCRIPTION

The chlorinators are provided to automatically regulate the chlorine gas flow from the chlorine evaporators to the ejectors. The ejectors are provided to create the required vacuum to draw the chlorine gas from the associated chlorinators and to mix the gas into the chlorine solution water.

The equipment consists of three Chlorinators, designated FB1-CH-1, 2 and 3, four Ejectors, designated FB1-EJ-1, 2, 3, and 4 and controls at the unit and on the Filter Building Chlorine System Panel. Ejectors FB1-EJ-3 and 4 are both connected to chlorinator FB1-CH-3. Each chlorinator has a rated capacity of 4,000 pounds of chlorine per day.

Each chlorinator is provided with an AUTO-MANUAL selector switch and an INCREASE-DECREASE (chlorine feed) selector switch at the unit. Controls on the Filter Building Chlorine System Panel (FBCSP) include a Chlorine Feed Mode Selector Switch, a Chlorine Residual Controller GM-4, a Chlorine Residual Indicator Recorder GM-5, power on indicating lights for each chlorinator and multistation selector switches (to lock "Feed Mode" signal to a selected chlorinator, see Figure III-FL-FB-16). The Chlorine Feed Mode Selector Switch permits chlorine feed for chlorination of effluent is paced by one of the following signals: total plant influent flow; residual chlorine concentration; or total plant flow multiplied by residual chlorine concentration. Chlorine feed for chlorination of return sludge is controlled by rate controllers that split the chlorine solution flow between Carbonaceous and Nitrification Return Sludge.

b. NORMAL OPERATION

Under normal operation, when the AUTO-MANUAL selector switch is in the AUTO position and the controls on the FBCSP are positioned as described hereinafter under "Start-Up and Shutdown Procedures" the associated chlorinator and ejector will automatically regulate the chlorine gas feed rate to maintain the set point chlorine residual for chlorination of effluent.

Under normal operation, two chlorinators and associated ejectors are required to be in service. One chlorinator is run at full capacity and the second chlorinator adjusts to demand based on a signal from the chlorine residual analyzer located at the Post Aeration Chlorination Tanks. The third

chlorinator and associated ejector are provided as standby units. The third chlorinator is also utilized to chlorinate return sludge.

Devices provided for control of the Return Sludge Chlorination Equipment are as follows:

- Chlorine Solution Pump ON/OFF/L push buttons located at the pump:

  The ON push button must be depressed for operation. The OFF and LOCK push buttons must be depressed to perform maintenance on the pump.

- Chlorine Solution Pump START/STOP push buttons located at the pump and on MCC-59A.

- Chlorine Solution Pump RESET push button located on MCC-59A:

  The RESET push button is used to reactivate the lockout relay once it has be tripped.

- Microprocessor Controller LOCAL/REMOTE push button locate on the PMTC-Top Box:

  When in the LOCAL position the Microprocessor Controller will use the ratio set point selected on the Microprocessor Controller to determine its output signal. REMOTE set point selection is not possible, therefore the Microprocessor Controller will not operate in the REMOTE mode.

- Microprocessor Controller AUTO/MANUAL push button located on the PMTC- Top Box:

  When in the AUTO position the Microprocessor Controller will automatically output a valve position control signal based upon the locally selected ratio set point and the flow signal received from Flow Indicating Transmitter No. 1. When in the MANUAL position, the output signal is generated from the manually selected ratio Flow 1/(Flow 1 + Flow 2)

- Microprocessor Controller Ratio Set Point Control push buttons locate on the PMTC - Top Box:

  Ratio Set Point Control push buttons are used to increase or decrease the ratio Flow 1/ (Flow 1 + Flow 2) set points. A scale indicating the selected ratio set points displayed on the Microprocessor Controller.

- Dual Flow Indicator Display located on the PMTC- Top Box:

  The bar graphs indicating chlorine solution flow to the Carbonaceous Return Sludge and Nitrification Return Sludge conduits are provided on the Dual Flow Indicator.

- Totalizers:

  Two totalizers indicating accumulated chlorine solution flow to the Carbonaceous Return Sludge and Nitrification return sludge conduits are provided on the PMTC - Top Box.

c. START-UP AND SHUTDOWN PROCEDURES

To start up and shut down the chlorinators and ejectors for chlorination of effluent use the following procedures:

1. Start-Up
   - Start up the following associated equipment as described elsewhere in this section: chlorine solution water pumps and chlorine evaporators
   - For Chlorination of Effluent set the desired chlorine residual on Chlorine Residual Indicator Controller GM-4
   - Close the circuit breaker for the chlorinator on MCC-59A
   - Place the Chlorine Feed Mode Selector Switch to the desired pacing signal as described hereinbefore under "Description"
   - Place the AUTO-MANUAL selector switch in the AUTO position

   NOTE

   Refer to Section 42 of the Division 4H6 Contractor's O&M Manual for start up precautions and adjustments.

2. Shutdown
   - Shut down the associated chlorine evaporator as described elsewhere in this section

   NOTE

   Refer to Section 42 of the Division 4H6 Contractor's O & M Manual for chlorinator shut down sequence.

For chlorination of return sludge, use the following procedures:

3. Start-up
   - Make sure power is supplied to all Return Sludge Equipment Components:
   - Start Chlorine Solution Pump.
   - Start Chlorine Evaporator, Chlorinator and open valve to the Chlorine Ejector as described above the chlorination of effluent.
   - Place the microprocessor in the AUTOMATIC output, LOCAL set point mode.
   - Select the ratio set point on the microprocessor.

4. Shutdown
   - Shut down the Chlorine Evaporator, Chlorinator, and close valve to the Chlorine Ejector as described above for chlorination of effluent.
   - Stop the Chlorine Solution Pump by depressing the STOP push button located either at the pump or MCC-59A.

NOTE

Open Circuit Breakers at MCC-59A and depress OFF push button located on the Chlorine Solution Pump and engage locking device if maintenance is to be performed on the equipment.

d. ALTERNATE OPERATION

The rate of chlorine gas feed may be manually controlled by placing the AUTO-MANUAL selector switch on the chlorinator in the MANUAL position. The chlorine gas feed rate may then be adjusted manually by use of the INCREASE-DECREASE switch.

The 2-inch Chlorine Solution Butterfly Control Valves that split the chlorine flow between Carbonaceous and Nitrification Return Sludge may be operated manually from the PMTC -Top Box or at the valves. For manual operation from the PMTC - Top Box, place the microprocessor in the MANUAL output, LOCAL set point mode. Valve positions may then be selected by varying the ratio set point. To operate the valve locally disengage the motor actuated operator and adjust the valve by moving the valve handle.

e. MONITORS AND ALARMS

Each chlorinator is provided with a power on indicating light on the FBCSP. Each chlorinator is provided with a vacuum switch which will initiate an audible and visual alarm on the FBCSP annunciator.

Indicator Recorder GM-5 located on the FBCSP is provided to indicate and record the chlorine residual and is provided with high and low chlorine residual alarm set points. An audible and visual alarm is initiated on the FBCSP annunciator if the chlorine residual exceeds the high or low set point value.

Flow Indicating Transmitters for chlorine solution flow to return sludge are equipped with flow velocity meters and LED displays that indicate percentage of output flow. The Microprocessor Controller located in the Main Pumping Station is provided with two programmable scales and one scale indicating output signal strength. The Dual Flow Indicator is equipped with a scale indicating chlorine solution flow to the Nitrification Return Sludge conduit.

The Remote Transmission Units in Filter Building No. 1 Control Room continuously scan and transmit the condition of all alarm points to the computer logger in the Process Control Room in the Main Pumping Station. All alarms are received and displayed by the computer logger.

(5) CHLORINE GAS LEAK DETECTION EQUIPMENT

a. DESCRIPTION

The chlorine gas leak detection equipment is provided to continuously monitor the atmosphere in the Chlorine Equipment Room for the presence of chlorine gas which would indicate a chlorine gas leak.

The equipment consists of Chlorine Gas Leak Detector OG-57, associated sample intake and exhaust piping, and associated alarm horn and alarm light.

b. MONITORS AND ALARMS

When the concentration of chlorine gas in the Chlorine Equipment Room exceeds the adjustable alarm set point value, an audible and visual alarm will occur on the Filter Building Chlorine System Panel (FBCSP) and an alarm horn and alarm light mounted near the entrance to the Chlorine Equipment Room will be actuated.

If the chlorine gas leak detector fails to operate for any reason, an audible and visual alarm will be initiated on the FBCSP.

The Remote Transmission Units in the Filter Building Control Room No. 1 continuously scan and transmit the condition of all alarm points to the computer logger in the Process Control Room in the Main Pumping Station. All alarms are received and displayed by the computer logger.

Q. SAMPLE PUMPS: FB1-SSP-1, 2, 3 AND FB2-SSP-4, 5

(1) DESCRIPTION

The Sample Pumps include three pumps in Filter Building No. 1, one sample pump in Filter Building No. 2 and one sample pump at the Denitrified Effluent Channel. The Sample Pumps are provided to pump sewage samples to sampling stations and to automatic analyzers (see Figure III-FL-FB-17). Sample Pump FB1-SSP-1 pumps nitrified effluent from a point ahead of the addition of methanol to Sampling Station PG-41. Sample Pump FB1-SSP-2 pumps a nitrified effluent sample after methanol addition to Sampling Station PG-41. Sample Pump FB1-SSP-3 pumps denitrified effluent from Filter Nos. 1-20 to Sampling Station PG-42. Sample Pump FB2-SSP-4 pumps denitrified effluent from Filter Nos. 21-26 and 31-36 to Sampling Station PG-41. Sample Pump FB2-SSP-5 pumps denitrified effluent combined from all filters to Sampling Station PG-42.

The pumps are self-priming, close-coupled centrifugal type pumps. Pumps FB1-SSP-1 and 2 have rated capacities of 25 gpm at 60 feet of head and are driven by ½ HP motors. Pump FB1-SSP-3 has a capacity of 25 gpm at 68 feet of head and is driven by a ½ HP motor. Pumps FB2-SSP-4 and 5 have rated capacities of 25 gpm at 29 feet of head and are driven by 1 HP motors.

The pump starters for FB1-SSP-1, 2 and 3 are located in Motor Control Center 58A. The pump starters, for FB2-SSP-4 is located in Motor Control Center 86 and for FB2-SSP-5 is located in Motor Control Center 59. A red ON light for each pump is provided on the front of its Motor Control Center.

The sample pumps are operated from the Sample Pump Control Station located on the mezzanine west of the Filter Building No. 1 Control Room. The Control Station is provided with START and STOP push buttons, red ON and green OFF indicating lights for each pump.

R. RESIDUAL CHLORINE ANALYZERS:

Residual chlorine analyzers are provided at the Post-Aeration Chlorination Tanks to automatically sample and analyze the plant effluent for residual chlorine concentration just after chlorination and post-aeration, just before the flow is dechlorinated with sulphur dioxide and just after dechlorination.

Refer to the section headed "Post-Aeration Chlorination Tanks" for a discussion of the Residual Chlorine Analyzers.

The residual chlorine concentrations are displayed on the Filter Building No. 1 control panel and are transmitted to the Computer Logger in the Main Pumping Station. The residual chlorine concentrations may also be used to pace the Chlorination Equipment as described hereinbefore and the Dechlorination Equipment as described in the section headed "Dechlorination Facilities".

S. SEWAGE SAMPLING EQUIPMENT: PG-41 AND PG-42

The sewage sampling equipment is provided to automatically obtain and store flow paced or timed paced composite samples from the following locations:

- Nitrified effluent sample (before methanol addition)
- Nitrified effluent sample (after methanol addition)
- Denitrified effluent from Filter Nos. 1-20
- Denitrified effluent from Filter Nos. 21-26 and 31-36
- Denitrified effluent combined from all filters
- Final plant effluent sample

NOTES

Typically the nitrified effluent sample after methanol addition is not used and Sample Pump FB1-SSP-2 is OFF. Valving to these samplers must be arranged to accept the desired samples.

The operator must select between the sample flows from Denitrified effluent combined from all filters and the Denitrified effluent from Filter Nos. 1-20 on Sampler No. PG-42 and arrange the valving for the desired sample.

Refer to Figure III-FL-FB-17 for diagrams of the sampling equipment. For a complete discussion of the sewage sampler equipment, operation and control, refer to the section headed "Sampling Equipment."

T. HOISTING EQUIPMENT: FB1-OC-1 AND FB1-MH-1 AND 2 AND FB2-MH-4 AND 5

The hoisting equipment in Filter Building No.1 consists of the following:

- 5-ton capacity overhead top running crane bridge and platform with electric motor-operated bridge and electric motor-operated Trolley and Hoist, designated FB1-OC-1.
- 3-ton capacity monorail motor-driven Trolley with electrically operated Hoist, designated FB1-MH-1
- 3-ton capacity monorail motor-driven Trolley with electrically operated Hoist, designated FB1-MH-2

The hoisting equipment in Filter Building No. 2 consist of the following:

- 3-ton capacity monorail motor-driven Trolley with electrically operated Hoist, designated FB2-MH-4
- 3-ton capacity monorail motor-driven Trolley with electrically operated Hoist, designated FB2-MH-5
- 5-ton capacity monorail motor-driven Trolley with electrically operated Hoist, designated FB1-MH-3 which is powered from the Access Building in Denitrification Filters No. 1-20.

The hoisting equipment is located in Filter Building No. 1 as follows:

- Overhead Crane FB1-OC-1 in crane bay above the Pump Room
- Monorail Hoist FB1-MH-1 in Blower Room, floor Elevation 11'-0"
- Monorail Hoist FB1-MH-2, above the liquid polymer storage tanks in the Pump Room

The hoisting equipment is located in Filter Building No. 2 as follows:

- Monorail Hoist FB2-MH-4 in Blower Room, floor Elevation 11"-0"
- Monorail Hoist FB2-MH-5 above Pump Room, floor Elevation -4'-0"
- Monorail Hoist FB1-MH-3 in above Upper Process Area, floor Elevation 11'-0"
  (This hoist is powered from the Access Building for Denitrification Filters No. 1-20)

For a complete discussion of the hoisting equipment, operation and control, refer to the section headed "Hoisting Equipment."

U. PLANT AIR (SEE FIGURE III-SU-UPS-1 THROUGH 3)

(1) DESCRIPTION

The plant air equipment supplies compressed air to the sampling station sampler arms, pneumatically operated valves, bubbler panels and to hose connections.

The plant air equipment in the Filter Buildings consists of piping and fittings, shutoff valves, hose valve connections, in-line filters, pressure regulating valves and pressure gauges, various solenoid valves, air line lubricators and moisture traps. Two packaged Plant Air Compressors systems are provided in Filter Building No. 2 to serve the southeast portion of the plant. Compressed air is also supplied to the plant air system by the plant air compressors as described in the section headed "Main Pumping Station."

Each packaged air compressor system consists of an inlet air filter, an air compressor, an aftercooler, a moisture separator, an air receiver, and an air dryer. The air compressors are single-stage, double acting water cooled, oil free, reciprocating piston type compressors driven by constant speed 40 HP motors through V-belt drives. Each air compressor delivers 147 scfm of air at 100 psig. The aftercoolers are effluent water cooled shell and tube type heat exchangers designed to cool the compressor's discharge air to 100°F. The air dryers are regenerative desiccant type air dryers that utilize an activated alumina desiccant to remove moisture from the air.

(2) NORMAL OPERATION

Each packaged air compressor system is provided with unit mounted control panel and annunciator panel. The control panel at each unit is provided with an ON-AUTO-OFF selector switch, a lockable disconnect switch, an elapsed time meter, a pressure gauge and run indicator light. The annunciator panel at each unit is provided with audible and visual alarm indication and alarm RESET, SILENCE and TEST push buttons.

Under normal operation, the ON-AUTO-OFF switch on the control panel for the lead compressor is required to be in the ON position, the ON-AUTO-OFF on the control panel for the lag compressor is required to be set in the AUTO position. The lead compressor will operate continuously, automatically loading and unloading as required to maintain the plant air system pressure. The standby compressor is normally shut down. If the lead unit fails or for any reason cannot meet the system air requirements, the standby unit will automatically start up.

Under normal operation the air compressor system in Filter Building No. 2 should be isolated from the air compressor system in the Main Pumping Station to balance operating load between the two systems. Isolation valves are located at the south end of the Final Tanks Gallery, at the west end of Filter Building No. 1, and at the south end of the Filter Nos. 1-20 Pipe Gallery. Operating experience will determine which valve is closed to isolate the two systems.

(3) START-UP AND SHUTDOWN PROCEDURES

To start up and shut down the plant air equipment use the following procedures:

a. START-UP

- Make sure the effluent water system is operating and open the valves required to supply cooling water to the packaged air compressor systems
- Close the circuit breakers on Motor Control Center MCC-86
- Close the circuit breakers at the units for each air compressor and air dryer
- Place the ON-AUTO-OFF/L switch on the associated compressor control panel in the ON position for the lead compressor and AUTO for the lag compressor.
- Depress the RESET push button on each compressor annunciator panel.

b. SHUTDOWN

- Shut down the plant air equipment by placing the ON-AUTO-OFF/L selector switch on the associated control panel in the OFF position

NOTE

If maintenance is to be performed on the equipment, open the circuit breakers at the associated unit and on Motor Control Center MCC-86 and place the disconnect switch on the control panel in the OFF position and engage the locking device. Follow approved **Lockout/Tagout** procedures (See Chapter VI, Safety).

Upon failure of this plant air compressor equipment, air can be supplied from the plant air compressor equipment in this Main Pumping Station by opening the isolation valve discussed above in the subsection headed "Normal Operation".

(4) MONITORS AND ALARMS

Each packaged air compressor system is provided with pressure indicating gauges, a run indicating light, overload reset button and elapsed time meter. Each unit is provided with relays to shut down the unit and initiate audible and visual alarms upon occurrence of any of the following:

- Low cooling water pressure
- High cooling water temperature
- High air temperature
- Low oil pressure
- High air pressure

In addition, low air pressure initiates audible and visual alarms at the unit. A common alarm for each air compressor is relayed to the annunciator in the Filter Building No. 2 Control Panel and the Filter Control Console in Filter Building No. 1.

The Remote Transmission Units in the Filter Building No. 1 Control Room continuously scan and transmit the condition of all alarm points to the computer logger in the Process Control Room in the Main Pumping Station. All alarms are received and displayed by the computer logger.

V. PLANT WATER (SEE FIGURE III-SU-UPS-4)

The plant water equipment in the Filter Building consists of piping and fittings, shutoff valves, a pressure gauge and hose valves. Plant water is supplied to the Filter Building by the plant water equipment as described in the section headed "Main Pumping Station." The plant water is used for hosing down the floors and as make-up water for the evaporators in the Chlorine Equipment Room.

W. EFFLUENT WATER (SEE FIGURE III-SU-UPS-5 THROUGH 9)

The effluent water system in the Filter Buildings consist of piping and fittings, shutoff butterfly and globe valves, 12-inch and 8-inch pressure regulating valves, Flowmeters MS-5 and FE-60, seal water flow control valves, and hose connections for flushing services.

The 12-inch and 8-inch pressure regulating valves automatically reduce the pump discharge pressure to a steady lower downstream pressure. Each valve has an adjustable range of 2 to 75 psig. Each valve can be bypassed if maintenance is required.

Flowmeters MS-5 and FE-60 measure the total effluent water flow. Meter MS-5 is a 12-inch magnetic meter with a range of 0 to 6,000 gpm and is provided with local flow rate indication. The flow signal is transmitted to Indicator G-106 on the Process Monitoring and Terminal Cabinet Addition in the Main Pumping Station. Meter FE-60 is a 8-inch magnetic meter with a range of 0 to 4000 gpm and is provided with local flow rate indication at FIT-60.

The Remote Transmission Units in the Filter Building No. 1 Control Room continuously scan and transmit flow signals to the computer logger in the Process Control Room in the Main Pumping Station. All flow signals are received and displayed by the computer logger.

X. HEATING, VENTILATING AND AIR CONDITIONING EQUIPMENT FOR FILTER BUILDING NO.1

(1) DESCRIPTION

Filter Building No. 1 contains the following heating, ventilating and air conditioning HVAC systems.

a. OFFICE, CONTROL ROOM AND TOILET ROOM HVAC SYSTEM

The purpose of the Office, Control Room and Toilet Room HVAC system is to provide automatic control of the temperature and humidity in these areas. The Office, Control Room and Toilet Room area are served by a HVAC system which is comprised of an automatic roll type filter, fans, cooling coils, electric heater coils and a refrigeration condenser-compressor unit and associated louvers and ductwork.

Outside air enters the system through louvers in the north wall of the HVAC Room. The outside air is mixed with return air before passing thorough an automatic roll type filter, and an air handling unit which contains a fan and cooling coils. The cooling coils cool the air when the outside air temperature is above 65°F. The fan distributes air through ducts to the Office and Control Room. Electric Heating Coils FB1-RH-1 and FB1-RH-2 which are provided in the ducts leading to the Control Room to heat the air when the outside air temperature falls below 65°F. A return fan pulls air from the rooms thorough return ducts. Dampers distribute return air to the mixing box for recirculation or to exhaust in the crane bay. The Toilet Room is equipped with a Roof Exhaust Fan, designated FB1-REF-1.

The heating, ventilating and air conditioning system is controlled from the Temperature Control Panel in the HVAC Room and from Motor Control Center 58A.

The Automatic Roll Type Filter, designated FB1-AF-1, has a renewable filter curtain. The roll-up mechanism is operated by a 1/6 horsepower motor which is controlled by an adjustable timer. The timer runs only when the supply fan is operating.

Air Handling Unit FB1-AH-1, contains fans and a cooling coil. The fans are driven through V-belts by a two speed 3 horsepower motor. The fans circulate 4,700 cfm of air at the high speed and 2,350 cfm at low speed. The cooling coil has the capacity to cool 4,700 cfm from 78°F dry bulb to 55°F dry bulb at 40°F saturated suction temperature.

The refrigerant for the cooling coil in the air handling unit is circulated to the coils from air cooled Compressor Condenser Unit FB1-CD-1, located on the mezzanine at floor Elevation 11'-0" in the Blower Room. the unit contains two compressors with two separate refrigeration systems. One compressor can shut down to provide partial load operation. Three condenser air fans are belt driven on a common shaft by a 5 horsepower motor.

The system also includes pneumatically operated dampers in the outside air, return air and exhaust ducts.

b. PUMP ROOM

The supply fans are provided to supply 100 percent outside air to the Pump Room. The Supply Fans, designated FB1-S-1A and FB1-S-1B are located in the Heating and Ventilating Equipment Room. Air enters the room through louvers with manually operated dampers. The fans supply air to the Pump Room thorough ducts. The air is exhausted, through louvers located in the south wall of the building above Elevation 23'-6". The louvers have manually operated dampers.

Supply Fans FB1-S-1A and FB1-S-1B are cabinet type fans driven through V-belts by two speed 10 horsepower motors. Each fan supplies 14,000 cfm of air at high speed and 7,000 cfm at low speed.

c. BLOWER ROOM

The Blower Room is supplied with outside air thorough a louver opening in the east wall which is equipped with manually-operated dampers. Air is exhausted from the room thorough ductwork by Exhaust Fan FB1-E-1. Fan FB1-E-1 is driven through V-belts by a 3/4 horsepower motor. The fan has a capacity of 3,250 cfm.

d. CHLORINE ROOM

The Chlorine Room is supplied with outside air through openings in the west wall with pneumatically operated louvers. The air is exhausted from the room by Roof Exhaust Fan FB1-REF-2. Fan FB1-REF-2 is driven through a V-belt drive by a 3 horsepower motor. The fan has a capacity of 11,120 cfm.

(2) <u>NORMAL OPERATION</u>

a. OFFICE, CONTROL ROOM AND TOILET ROOM

The supply fan in Air Handling Unit FB1-AH-1 is a 2-speed fan which is manually started with an ON-OFF switch on MCC-58A. Return Fan FB1-RF-1 is a 2-speed fan which has an OFF-ON/AUTO switch on MCC-58A. Under normal operation when the switch is set in the ON/AUTO

position, the fan will start when Supply Fan FB1-AH-1 is started. Roof Exhaust Fan FB1-REF-1 in the Toilet Room has a MANUAL-OFF-AUTO selector switch on the HVAC system Temperature Control Panel. Under normal operation when the switch is in the AUTO position the fan will start when Supply Fan FB1-AH-1 is started, or when the Toilet Room lights are turned on.

Heating or cooling cycles are controlled by an outside air thermostat. At the following recommended initial thermostat set points the following occur:

- Outside air temperature below 60°F: Fans FB1-AH-1 and FB1-RF-1 operate at slow speed
- Outside air temperature above 60°F: Fans FB1-AH-1 and FB1-RF-1 operate at fast speed
- Outside air temperature above 60°F: The air conditioner will operate to maintain air temperature in the return air duct of 75°F. The dampers are set for minimum intake air and maximum return air
- Outside air temperature below 65°F: Control Room thermostats control the electric duct two-stage Heaters, FB1-RH-1 and FB1-RH-2, to maintain room temperatures of 70°F. If the control room overheats, the room thermostat modulates the dampers to provide more outside air. A thermostat operates to control the mixed air at a minimum temperature of 55°F.

b. PUMP ROOM

Supply Fans FB1-S-1A and FB1-S-1B are controlled from MCC-59A. Under normal operation when the OFF-ON/AUTO switch is set in the ON/AUTO position, the 2-speed fans operate continuously at the slow speed. On a rise in room temperature above the thermostat set point, both fans will operate at high speed. On a drop in room temperature below the thermostat set point, the fans return to slow speed. Recommended initial set point is 85°F. The manually operated louvers are required to be open for the air to exhaust.

c. BLOWER ROOM

Exhaust Fan FB1-E-1 which serves the Blower Room is operated from MCC-58A. Under normal operation when the HAND-OFF-AUTO selector switch is in the AUTO position, the fan will operate when the temperature rises above the thermostat set point. When the temperature drops below the thermostat set point, the fan is turned off. Initial recommended set point is 85°F. The manually operated louvers are required to be open to provide outside air.

d. CHLORINE ROOM

Roof Exhaust Fans FB1-REF-2 and the pneumatically operated air intake dampers in the Chlorine Room operate intermittently. Under normal operation when the MANUAL-OFF-AUTO selector switch on MCC-59A is in the AUTO position, the fan and dampers will be controlled as follows:

- By a manual ON-OFF switch outside the door, turned ON before entering
- By a room thermostat which starts the fan and opens the dampers when the room temperature rises to the 85°F (initial recommended set point) set point. The fan stops and dampers are closed when the temperature drops below the set point

- When the chlorine gas detector senses chlorine gas concentration above the alarm set point in the Chlorine Room, the fan is started and the dampers are opened. A reset button on MCC-59A must be pushed to stop the fan after emergency starting

(3) START-UP AND SHUTDOWN PROCEDURES

To start up and shut down the heating, ventilating and air conditioning equipment, use the following procedures:

a. OFFICE, CONTROL ROOM AND TOILET ROOM

1. Start-Up

- Check set points of temperature controllers on the Temperature Control Panel for outside air, mixed air and return air temperature
- Place the ON-OFF switches at the units for Fans FB1-AH-1, FB1-RF-1 and FB-REF-1 in the ON position
- Close the circuit breaker in MCC-58A for Compressor-Condenser Unit FB1-CD-1
- Close the circuit breaker in MCC-58A for In Duct Reheat Units FB1-RH-1 and FB1-RH-2
- Place the OFF-ON/AUTO selector switches for Air Handling Unit FB1-AH-1 and Return Fan FB1-RF-1 on MCC-58A in the ON/AUTO positions
- Place the MANUAL-OFF-AUTO selector switch for Roof Exhaust Fan FB1-REF-1 on the Temperature Control Panel in the AUTO position
- Place the HAND-OFF-AUTO selector switch for Air Filter FB1-AF-1 on the Air Filter Control Panel in the AUTO position

2. Shutdown

- Place the ON-OFF switch for Air Handling Unit FB1-AH-1 on MCC-58A in the OFF position

NOTE

If maintenance is to be performed on any unit in the system, manually turn the unit OFF and open its associated circuit breaker. Follow approved **Lockout/Tagout** procedures (See Chapter VI, Safety).

b. PUMP ROOM

1. Start-Up

- Place the ON-OFF switch for Supply Fans FB1-S-1A and FB1-S-1B in the ON position
- Place the OFF-ON/AUTO switch on MCC-59A for Supply Fans FB1-S-1A and FB1-S-1B in the ON/AUTO position

2. Shutdown
   - Place the OFF-ON/AUTO switch on MCC-59A in the OFF position

NOTE

If maintenance is to be performed place the ON-OFF switch at the unit in the OFF position, engage the locking device and open the circuit breaker on MCC-59A. Follow approved **Lockout/Tagout** procedures (See Chapter VI, Safety).

c. BLOWER ROOM
   1. Start-Up
      - Place the ON-OFF switch for Exhaust Fan FB1-E-1 at the unit in the ON position
      - Place the HAND-OFF-AUTO selector switch for Exhaust Fan FB1-E-1 on MCC-59A in the AUTO position

   2. Shutdown
      - Place the HAND-OFF-AUTO selector switch on MCC-59A in the OFF position

NOTE

If maintenance is to be performed, place the ON-OFF switch at the unit in the OFF position and engage the locking device and open the circuit breaker on MCC-58A. Follow approved **Lockout/Tagout** procedures (See Chapter VI, Safety).

d. CHLORINE ROOM
   1. Start-Up
      - Place the ON-OFF switch at Roof Exhaust Fan FB1-REF-2 in the ON position
      - Place the HAND-OFF-AUTO selector switch on MCC-59A in the AUTO position
      - Set the room thermostat. Recommended setting is 85°F
      - Make sure that the Chlorine Gas Leak Detector OG-57 is ON and functioning as described hereinbefore

   2. Shutdown
      - Place the HAND-OFF-AUTO selector switch on MCC-59A in the OFF position

      - If the fan has been started by the chlorine leak detector, push the reset button on MCC-59A to stop the fan after the chlorine gas has been evacuated

NOTE

If maintenance is to be performed on the fan, place the ON-OFF switch at the unit in the OFF position and engage the locking device and open the circuit breaker on MCC-59A. Follow approved **Lockout/Tagout** procedures (See Chapter VI, Safety).

(4) MONITORS AND ALARMS

The supply, exhaust and return air fans and all components of the air conditioning equipment are provided with status indicating lights on associated Motor Control Centers MCC-58A and MCC-59A.

Audible and visual alarms are provided on the Filter Building Panel - Miscellaneous Section annunciator for the following:

- Filter media run out
- Air flow failure in Duct Heater FB1-RH-1, actuated by an air flow pressure switch in the duct
- Air flow failure in Duct Heater FB1-RH-2, actuated by an air flow pressure switch in the duct

The Remote Transmission Units in the Filter Building No.1 Control Room continuously scan and transmit the condition of all alarm points to the computer logger in the Process Control Room in the Main Pumping Station. All alarms are received and displayed by the computer logger.

Y. HEATING, VENTILATING AND AIR CONDITIONING EQUIPMENT FOR FILTER BUILDING NO. 2

(1) DESCRIPTION

Filter Building No. 2 contains the following heating, ventilating and air conditioning HVAC systems.

a. SUPPLY FAN: FB2-S-4

Supply Fan FB2-S-4, provides fresh outside air to the upper and lower process area, including the pump room area of Filter Building No. 2. The supply fan is an epoxy coated single speed, belt driven centrifugal blower, with a ventilating capacity of 15,000 cfm at a fan speed of 922 rpm. the fan is provided with a 7 1/2 horsepower motor.

b. SUPPLY FAN: FB2-S-5

Supply Fan FB2-S-5, provides fresh outside air to the meter vault area of Filter Building No. 2. The supply fan is an epoxy coated, single speed, belt driven centrifugal blower, with a ventilating capacity of 4000 cfm at a fan speed of 1604 rpm. The fan is provided with a 1 1/2 horsepower motor.

c. SUPPLY FAN FB2-S-6

Supply Fan FB2-S-6, provides fresh outside air to the Filter Pipe Gallery area for Denitrification Filter Nos. 21-26 and 31-36, and is located in the Access Building at the south end of Denitrification Filter Nos. 21-26 and 31-36. The supply fan is an epoxy coated, single speed, belt

driven centrifugal blower, with a ventilating capacity of 4200 cfm at a fan speed 1581 rpm. The fan is provided with a 1 1/2 horsepower motor.

d. SUPPLY FAN: FB2-S-7

Supply Fan FB2-S-7, provides fresh outside air to the Filter Pipe Gallery area for Denitrification Filter Nos. 1-20 and replaces supply fan FB1-S-3 previously installed as part of Denitrification Filter Nos. 1-20 Access Building. The supply fan is an epoxy coated, single speed, belt driven centrifugal blower, with a ventilating capacity of 6600 cfm at a fan speed of 1147 rpm. The fan is provided with a 3 horsepower motor.

e. SUPPLY FAN: FB2-S-8

Supply Fan-FB2-S-8, provides fresh outside air to the north and of the process area of Filter Building No. 2. The supply fan is an epoxy coated, single speed, belt driven centrifugal blower, with a ventilating capacity of 8700 cfm at a fan speed of 1189 rpm. The fan is provided with a 5 horsepower motor.

f. SUPPLY FANS: FB2-S-9, 10 AND 11

Supply Fans FB2-S-9, 10 and 11, provide fresh outside air to the blower room area of Filter Building No. 2. Each supply fan is an epoxy coated, single speed, belt driven centrifugal blower with a ventilating capacity of 7000 cfm at a fan speed of 1182 rpm. Each fan is provided with a 3 horsepower motor.

g. ROOF EXHAUST FAN: FB2-REF-3

Roof exhaust Fan FB2-REF-3 serves the Filter Building No. 2 Transformer Yard. The fan is an epoxy coated, centrifugal belt driven type with a ventilating capacity of 6500 cfm at a fan speed of 450 rpm. The fan is provided with a 3/4 horsepower motor.

h. AIR CONDITIONING UNIT: FB2-AC-21

Air Conditioning Unit FB2-AC-2 serves the Filter Control Room Area. The air conditioner is a self contained package unit, rated at 14,000 BTU/HR.

(2) NORMAL OPERATION

a. SUPPLY FANS: FB2-S-4, 6 AND 8

Supply Fans: FB2-S-4, 6 and 8 are each provided with a run indicating light located on MCC-86. An ON-OFF switch with a locking device for the OFF position and TEST push button is located at each unit.

Under normal operation, each fan is controlled through Temperature Control Panel FB2-TCP-1 by a 7-day time clock. Each fan has a ON-OFF-AUTO selector switch on FB2-TCP-1. In addition, Supply Fan FB2-S-4 is controlled by an adjustable room thermostat that overrides the non-operating mode of the 7-day time clock if the temperature rises above 85°F. The supply air is

relieved through normally open manually operated dampers on the east wall and above the east and west outside entrance doors.

b. SUPPLY FAN: FB2-S-5

Supply Fan FB2-S-5 is provided with a run indicating light located on MCC-86. An ON-OFF switch with a locking device for the OFF position and a TEST push button is located at the unit.

Under normal operation, the fan is controlled through Temperature Control Panel FB2-TCP-1 by a 7-day time clock. The fan has an ON-OFF-AUTO selector switch on FB2-TCP-1. The supply air is relieved hrough normally open manually operated dampers located on the west wall of the meter vault area of Filter Building No. 2.

c. SUPPLY FAN: FB2-S-7

Supply Fan FB2-S-7 is provided with a run indicating light located on MCC-86. An On-OFF switch with a locking device for the OFF position and a TEST push button is located at the unit.

Under normal operation, the fan is controlled thorough Temperature Control Panel FB2-TCP-1 by a 7-day time clock. The fan has an ON-OFF-AUTO-selector switch on FB2-TCP-1. The supply air is relieved through normally open manually operated dampers located in Filter Building No. 1.

d. SUPPLY FANS: FB2-S-9, 10 AND 11.

Supply Fans FB2-S-9, 10 and 11 are each provided with a run indicating light located on MCC-86. An ON-OFF switch with a locking device for the OFF position and a TEST push button is located at the unit.

Under normal operation, each fan is controlled through Temperature Control Panel FB2-TCP-1 by adjustable room thermostats. Supply Fans FB2-9,10 and 11 will sequentially come on as the room temperature rises above 85°F, 87°F and 89°F and go off when the room temperature drops below 87°F, 85°F and 83°F.

Each fan has an ON-OFF-AUTO selector switch on FB2-TCP-1. The supply air is relieved through normally open manually operated dampers located on the west wall of the blower room.

e. ROOF EXHAUST FAN: FB2-REF-3

Roof Exhaust Fan FB2-REF-3 is provided with a run indicating light located on MCC-86 position and a TEST push button is located at the unit.

Under normal operation, the fan is controlled thorough Temperature Control Panel FB2-TCP-1 by an adjustable thermostat. The fan comes on when the temperature rises above 85°F and goes off when the temperatures drops below 83°F. the fan has an ON-OFF-AUTO selector switch on FB2-TCP-1. The source of outside air is through louvers located on the south wall of the Filter Building No. 2 Transformer Yard.

f. AIR CONDITIONING UNIT: FB2-AC-2

Air Conditioning Unit FB2-AC-2, is a self contained package unit, mounted above the entrance door to the Filter Control Room. The air conditioning unit has ON/OFF, HIGH/LOW-SPEED FAN, and TEMPERATURE Controls.

(3) START-UP AND SHUT DOWN PROCEDURES

To start-up and shutdown the ventilating and air conditioning equipment, use the following procedures:

a. START-UP

1. Supply Fans: FB2-S-4, 5, 6, 7 and 8
   - Close the circuit breaker at MCC-86
   - Place the ON-OFF switch at the unit in ON position
   - Turn the ON-OFF-AUTO selector switch at FB2-TCP-1 to the AUTO position
   - Set the time clock in FB2-TCP-1 to the desired on and off times
   - The fans will come on and off with the time clock and Fan FB2-S-4 will also come on when the room temperature exceeds 85°F.

2. Supply Fans: FB2-9, 10 and 11
   - Close the circuit breaker at MCC-86
   - Place the ON-OFF switch at the unit in the ON position
   - Turn the ON-OFF-AUTO selector switch at FB2-TCP-1 to the AUTO position
   - When the room temperature rises above 85°F, 87°F and 89°F, fans FB2-9, 10 and 11, will start respectively

3. Roof Exhaust Fan: FB2-REF-3
   - Close the circuit breaker at MCC-86
   - Place the ON-OFF switch at the unit in the ON position
   - Turn the ON-OFF-AUTO selector switch at FB2-TCP-1 to the AUTO position
   - When the temperature rises above 85°F the fan will automatically start

4. Air Conditioning Unit: FB2-AC-2
   - Close circuit breaker No. 19 at LP-86
   - Turn switch at unit to ON
   - Adjust fan speed and temperature controls

b. SHUTDOWN

1. Supply Fans: FB2-S-4,5,6,7,8 and 9 and Roof Exhaust Fan: FB2-REF-3
   - Turn the ON-OFF switch at the unit to the OFF position or turn the ON-OFF-AUTO switch at FB2-TCP-1 to the OFF position

NOTE

If maintenance is to be performed on the fan, open the associated circuit breaker on MCC-86 and

place ON-OFF switch at the unit in the OFF position and engage the locking device. Follow approved **Lockout/Tagout** procedures (See Chapter VI, Safety).

2. Air Conditioning Unit: FB2-AC-2
   - Turn the ON-OFF switch on the unit to the OFF position

NOTE

If maintenance is to be performed on the unit open the associated circuit breaker in LP-86 and unplug the power cord at the unit. Follow approved **Lockout/Tagout** procedures (See Chapter VI, Safety).

(4) MONITORS AND ALARMS

Supply Fans: FB2-S-4 thru 9 and Roof Exhaust Fans FB2-REF-3 are provided with run indicating lights located on the Motor Control Center MCC-86. Flow switches are provided on each supply and roof exhaust fan to initiate individual alarm lights at the Temperature Control Panel FB2-TCP-1 for air flow failure when the fan is running in the AUTO mode. A common alarm for fan failure is indicated at the annunciator at the Filter Building No. 2 Control Panel and at the Filter Control Console in Filter Building No. 1.

The Remote Transmission Units in Filter Building No. 1 continuously scan and transmit the condition of all alarm point to the computer logger in the Process Control Room in the Main Pumping Station. Individual Alarms are displayed by the computer logger.

Z. POWER DISTRIBUTION SYSTEM

The power distribution system is shown in detail on the contract plans and various shop drawings. Refer to Tables III-FL-FB1-1 and III-FL-FB2-2, Filter building - Facility Equipment summary for contract plan and shop drawing numbers which pertain to the power distribution system.

III-FL-DF DENITRIFICATION FILTERS (014)

A. GENERAL

The Denitrification Filters include 32 filters, the Filter Pipe Galleries and the Filter Access Buildings (see Figures III-FL-DF-1, 2 and 3). Denitrification Filter Nos. 1-20 are located south of Filter Building No. 1 and Denitrification Filter Nos. 21-26 and 31-36 are located south of Filter Building No. 2. The following equipment and systems are included:

- Denitrification Filters
- Denitrification Filter Nos. 1-20 Control System
- Denitrification Filter Nos. 21-26 and 31-36 Control System
- Denitrification Filters Liquid Level Control System
- Sump Pump
- Hoisting Equipment
- Plant Air
- Plant Water
- Effluent Water
- Ventilation Equipment
- Power Distribution System

Nitrified effluent flows to the Denitrification Filters under any of two options as follows:

- Option 1. Nitrified effluent from the Nitrification Stage Final Sedimentation Tank Nos. 1-12 flows to the Denitrification Filters by gravity through a 72-inch by 84-inch underground conduit and a 72-inch diameter underground conduit. Nitrified effluent also flows from Final Sedimentation Tanks Nos. 13-20 to the Denitrification Filters by gravity through Junction Chamber No. 6.

- Option 2. All nitrified effluent flows from Final Sedimentation Tank Nos. 13-20 through Junction Chamber No. 6 only.

The denitrified effluent leaves the Denitrification Filters and flows to the Post-Aeration Chlorination Tanks by gravity through the 8-feet wide by 19-feet high Final Effluent Channel (see Figure III-FL-DF-1).

Refer to Table III-FL-DF-3, Denitrification Filters - Facility Equipment Summary, for control numbers, manufacturers, equipment capacities, and operation, maintenance, contract plan and shop drawing references. Refer to the Divisions 4H6, 6-105, 8-152 and 9-176 Contractor's O&M Manual for Manufacturer's Service Manuals pertaining to equipment associated with Denitrification Filter Nos. 1 through 20. Refer to the Division 5H1 Contractor's O&M Manual for Manufacturer's Service Manuals pertaining to equipment associated with Denitrification Filter Nos. 21-26 and 31-36.

B. PROCESS CONTROL - DENITRIFICATION FILTERS

(1) DESCRIPTION

Thirty-two deep bed mono-media Denitrification Filters are provided for the removal of nitrogen (denitrification) from the sewage. The filters and associated controls are arranged into two groups of ten filters each in Denitrification Filter Nos. 1-20 and two groups of six filters each in Denitrification Filter

Nos. 21-26 and 31-36 (this second group of twelve filters is arranged for future expansion to twenty filters; therefore, the second group will ultimately be numbered Nos. 21-40).

The nitrogen, primarily in the form of nitrate and nitrite, in the sewage applied to the filters is biologically dissimulated to nitrogen gas in the Denitrification Filters. Refer to the section headed "Advanced Treatment" of Chapter II - Process Description for a detailed discussion of the process theory.

Equipment which has been provided to support the denitrification process includes backwash water pumps, backwash air blowers, chemical handling and feed equipment and controls.

(2) MEASUREMENTS AND ANALYSES

a. NITRATE-NITROGEN

By measuring and comparing the concentration of nitrate-nitrogen in the influent to the Denitrification Filters against that in the effluent from the Denitrification Filters, an indication of the efficiency of the process may be obtained.

The nitrate-nitrogen concentration in the influent to and the effluent from the Denitrification Filters is also used to determine the methanol feed rate.

b. TOTAL ORGANIC CARBON (TOC)

By measuring and comparing the total organic carbon (TOC) concentration in the influent sewage to the Denitrification Filters against that in the effluent from the Denitrification Filters an indication of the methanol utilization may be obtained. High concentrations of TOC in the effluent indicate that too much methanol is being dosed. Low concentrations of TOC in the effluent may indicate that not enough methanol is being dosed.

c. DISSOLVED OXYGEN

The dissolved oxygen (DO) concentration in the influent to the Denitrification Filters is also used to determine a part of the methanol feed rate.

The following formula may be used to calculate a theoretical methanol feed rate:

Where: $M_R = 2.47\ NO_3^- - N + 1.53\ NO_2^- - N + 0.87\ DO$

M_R = Required methanol concentration, mg/l
NO_3^- - N = Nitrate concentration removed, mg/l
NO_2^- - N = Nitrite concentration removed, mg/l
DO = Dissolved oxygen removed, mg/l

From the above formula, it can be seen that high DO concentrations are undesirable as they increase methanol use requirements.

d. pH AND ALKALINITY

The denitrification process causes a rise in alkalinity of the sewage which partially offsets the effects of pH depression caused by nitrification. Theoretically, a rise of about 3 mg alkalinity as $CaCo_3$ will be produced per mg nitrogen reduced.

(3) PROCESS CONTROL

a. M/N RATIO

The M/N Ratio is the ratio of methanol required (in milligrams) to the initial nitrate nitrogen (in milligrams) concentration. The M/N Ratio includes the methanol required for nitrite and dissolved oxygen (DO).

The M/N Ratio may be calculated by the formula shown above as follows:

$$M_R = 2.47\ NO_3^- - N + 1.53\ NO_2^-\ N + 0.87\ DO$$

(see the paragraph headed " Measurements and Analyses" above for definition of variables)

$$MIN = M_R INO_3^- - N$$

For example: Assume

$$NO_3^- - N = 25.0\ mg/l,\ NO_2^- - N = 0.5\ mg/l,\ DO = 2.0\ mg/l$$

Determine the theoretical required methanol dosage rate and the M/N Ratio.

$$M_R = 2.47\ (25.0) + 1.53\ (0.5) + 0.87\ (2.0)$$
$$= 64.255\ mg/l$$
$$M/N = 64.255/25.0 = 2.57$$

Generally, a M/N Ratio of 2.5 to 3.0 will provide 90 percent or higher nitrate removals.

b. FILTERING

The Denitrification Filters are designed for an annual average flow rate of 2 (2.5 including recycle flows) gallons per minute per square foot of filter surface and a maximum rate of 5 gallons per minute per square foot of filter surface.

The water level in the Denitrification Filters is maintained at Elevation 15.75, or about 3 inches below the weir crest, by level controls and modulating effluent valves to provide a constant filtering head (see Figure III-FL-DF-5).

c. NITROGEN RELEASE CYCLE (NRC)

During the denitrification filtering process, nitrogen gas given off from the dissimulation of nitrate nitrogen becomes trapped in the filter media. As the nitrogen gas continues to accumulate in the

media the hydraulic capacity of the filter is reduced. Automatic and semiautomatic controls have been provided to periodically initiate a short water backwash of each Denitrification Filter. The short water backwash permits the trapped nitrogen gas to escape and, therefore, is called a Nitrogen Release Cycle (NRC). The actual interval required between NRC's must be determined by operating experience, but an initial interval of 2 hours is recommended.

d. FULL BACKWASH CYCLE

During the filtering process, solids in the sewage become trapped in the filter media. The nitrogen release cycle described above is not intended to remove solids from the filter. Therefore, periodically a full air-water backwash is required to remove trapped solids from the filter media. Automatic and semiautomatic controls are provided to initiate a full air, air-water, post water backwash of each filter. The actual interval between full backwashes must be determined by operating experience, but an initial interval of 1 day is recommended.

(4) REPORTING

The operator for each area is responsible for obtaining and logging information into the plant computer logging system and on forms as required. A list of the required information to be logged is obtained by pressing the "HELP" key on the computer at the control console in Filter Building No. 1. Data is entered into the computer by pressing the "ENTER" key.

C. DENITRIFICATION FILTERS

(1) DESCRIPTION

Denitrification Filter Nos. 1-20 are arranged in two groups of ten filters each; the East Filter Group (1-10) and the West Filter Group (11-20). Denitrification Filter Nos. 21-26 and 31-36 are arranged in two groups of six filters each; the East Filter Group (21-26) and the West Filter Group (31-36) arranged for future expansion to twenty filters; therefore, they will ultimately be the East Filter Group (21-30) and the West Filter Group (31-40).

Each filter is divided into two sections separated by the Gullet (see Figure III-FL-DF-4 and III-FL-DF-5). Each section is 5 feet wide by 105 feet long. Each filter is made up of a 4-foot 6-inch thick layer of coarse mono-media filter sand, a 1-foot 2-inch thick layer of coarse graded gravel and underdrain filter blocks which are supported by precast filter bottoms (see Figures III-FL-DF-4 and III-FL-DF-5).

Denitrification Filter Nos. 1-20 are operated and controlled from the Filter Building Panel - Filter Section (FBPFS) in Filter Building No. 1. Denitrification Filter Nos. 21-26 and 31-36 are operated and controlled from the Filter Control Console in Filter Building No. 1 or from the Filter Building No. 2 Control Panel. Refer to the subsections headed "Denitrification Filter Nos. 1-20 Control System" and "Denitrification Filter Nos. 21-26 and 31-36 Control System" for a discussion of the operation and control of the filters.

D. DENITRIFICATION FILTEG:\DOC\O&M\CHAP3\TOM3FL.WPDR NOS. 1-20 CONTROL SYSTEM

(1) DESCRIPTION

The Denitrification Filters control system is provided to automatically control the filtering, nitrogen release cycle (NRC) and full backwash cycles of the Denitrification Filters.

The Denitrification Filters control system for Denitrification Filter Nos. 1-20 consists of the Filter Building Panel - Filter Section (FBPFS). The FBPFS is provided with individual filter controls, east and west filter group controls, an annunciator panel, backwash water pump and backwash water rate controller controls, backwash air blower controls, denitrification filters bypass sluice gate position indication, and miscellaneous devices (see Figure III-FL-DF-6 and III-FL-DF-8).

Typical controls for each individual filter consist of the following:

- Filter Off - Indicating Light
- Normal Filtration - Indicating Light
- Nitrogen Release Cycle - Indicating Light
- Full Backwash - Indicating Light
- Filter Mode Selector Switch - MANUAL/SEMIAUTO/AUTO
- Effluent Control Valve A - Position Indicator
- Effluent Control Valve A - Position Indicating Lights
- Effluent Control Valve B - Position Indicator
- Effluent Control Valve B - Position Indicating Lights
- Influent Valve - Position Indicating Lights
- Backwash Water Valve A - Position Indicating Lights
- Backwash Water Valve B - Position Indicating Lights
- Backwash Air Valve - Position Indicating Lights
- Backwash Drain Valve - Position Indicating Lights
- Manual Drain Valve A - Position Indicating Lights
- Manual Drain Valve B - Position Indicating Lights
- Individual Filter Liquid Level Controller

In addition to the above, a "Filter Group Liquid Level Controller" is provided for each group of filters.

Typical controls for the east and west filter groups for nitrogen release cycle (NRC) consist of the following:

- In Operation/Off - Indicating Lights
- Automatic Mode Nitrogen Release Cycle Timer
- Automatic Mode Nitrogen Release Backwash Water Timer
- Semiautomatic Mode Filter Selector Switch with START-STOP Push Button
- Semiautomatic Mode Nitrogen Release Backwash Water Timer

Typical controls for the east and west filter groups for full backwash cycle consist of the following:

- In Operation/Off - Indicating Lights

- Nitrogen Release Cycle Counter
- Automatic Mode Pre-Air Timer
- Automatic Mode Air-Water Backwash Timer
- Automatic Mode Post Backwash Water Timer
- Semiautomatic Mode Filter Selector Switch with START-STOP Push Buttons
- Semiautomatic Mode Pre-Air Timer
- Semiautomatic Mode Air-Water Backwash Timer
- Semiautomatic Mode Post Backwash Water Timer

The annunciator panel on the FBPFS provides audible and visual indication of all alarms associated with the Denitrification Filters as described hereafter. The annunciator panel is provided with TEST, RESET and SILENCE push buttons.

The backwash water pumps and backwash water rate controller controls consist of the following:

- East Group Backwash Water Rate Controller Set Point Station
- West Group Backwash Rate Controller Set Point Station
- Backwash Water Pump Suction and Discharge Valve Position Indicating Lights
- Pump On - Indicating Light, each Pump
- Pump Off - Indicating Light, each Pump
- Pump in Service - Indicating Light, each Pump
- East Group/Off/West Group Selector Switch - Assigns Standby Pump FB1-BWP-2 to Service

The backwash air blowers controls consist of the following:

- Backwash Air Blower Discharge Valve Position Indicating Lights
- Blower On - Indicating Lights
- Blower Off - Indicating Lights
- Blower No. 1/Off/Blower No. 2 Selector Switch

Miscellaneous devices on the FBPFS include the following:

- Clock
- Test East Group Indicating Lights
- Test West Group Indicating Lights
- Test Equipment Indicating Lights

(2) NORMAL OPERATION

Under normal operation, when each filter's MANUAL-SEMIAUTO-AUTO selector switch is in the AUTO position and other associated controls are positioned as described hereinafter under "Start-Up and Shutdown Procedures", each filter will automatically sequence through normal filtering, nitrogen release and full backwash cycles as described below.

The actual required intervals between NRC's and full backwash cycles and the duration of water, air-water and post water washes must be determined by operation of the system. However, Table III-FL-DF-4 presents suggested initial set points for time and other controls which control the above variables.

Under normal operation, for each group of the filters, the filtering, nitrogen release and full backwash cycles will occur as follows (assuming that all timers and counters are set as shown in Table III-FL-DF-4, operation for east group of filters is described, the operation of the west group is similar):

CAUTION

The backwash water piping for each filter group has been provided with an overflow relief pipe that discharges into Filter Nos. 10 and 20 for the East and West Filter Groups, respectively. Some minor discharge from the relief pipe may occur at the start of a Backwash or NRC Cycle. Continuous flow from this pipe during a Backwash or NRC cycle indicates possible excessive pressure under the precast concrete filter bottoms, which can cause lifting of the filter bottoms resulting in serious damage. The Backwash or NRC Cycle should be aborted if continuous flow occurs.

- All filters in group in normal filtering cycle
- After 2 hours, automatic mode NRC timer times out
- Influent valve to Filter No. 1 closes (all other filters continue normal).
- Two effluent control valves for Filter No. 1 close
- Backwash drain valve for Filter No. 1 opens
- Two backwash water valves to Filter No. 1 open
- Backwash water pump starts
- Automatic mode NRC backwash water time begins timing
- While Filter No. 1 is in the NRC backwash, the influent valve to Filter No. 2 closes (all other filters continue normal filtering)
- Two effluent control valves from Filter No. 2 close
- Backwash drain valve from Filter No. 2 opens
- Backwash water valve to Filter No. 2 opens
- Automatic mode NRC timer times out and resets
- Two backwash water valves to Filter No. 1 close
- Backwash drain valve from Filter No. 1 closes
- Two effluent control valves from Filter No. 1 open
- Influent valve to Filter No. 1 opens and Filter No. 1 returns to normal filtering cycle

The remaining filters in the east group continue to sequence through the nitrogen release. After the automatic mode NRC timer times out in Filter No. 10, the backwash water pump shuts down. One count is registered on the NRC counter. All ten filters are again in a normal filtering cycle for the next four hours until the automatic mode timer again times out.

Immediately after the east group of filters have gone through the twelfth NRC (adjustable 0 to 999), the NRC counter counts out and initiates a full backwash cycle as follows:

- Influent valve to Filter No. 1 closes (all other filters continue normal filtering)
- The liquid level in Filter No. 1 drains down to Elevation +13.50'
- Two effluent control valves from Filter No. 1 close
- Backwash drain valve from Filter No. 1 opens
- Backwash air valve to Filter No. 1 opens
- Backwash air blower starts
- Automatic mode pre-air timer begins timing
- While Filter No. 1 is in pre-air backwash the two backwash water valves open
- The backwash water pump starts
- The automatic mode pre-air timer times out and resets and simultaneously the automatic mode air-water backwash timer begins timing
- The automatic mode air-water backwash timer times out and resets and simultaneously the automatic mode post-water backwash timer begins timing
- The backwash air blower shuts down
- The backwash air valve to Filter No. 1 closes
- The automatic mode post-water backwash timer times out and resets
- The backwash water pump shuts down
- Two backwash water valves to Filter No. 1 close
- The backwash drain valve from Filter No. 1 closes
- Two effluent control valves from Filter No. 1 open
- Influent valve to Filter No. 1 opens and Filter No. 1 returns to normal filtering cycle

The automatic mode interval timer between backwashing adjacent filters begins timing. After forty five minutes (adjustable 45 to 120 minutes), the timer times out, resets and initiates a full backwash for Filter No. 2 as described above for Filter No. 1.

After Filter No. 2 has gone through a full backwash and has returned to normal filtering, automatic mode interval timer between last full backwash and next full backwash after the following NRC begins timing. After four hours and five minutes (adjustable 45 minutes to 10 hours and 45 minutes), this timer times out and initiates a group NRC immediately after which Filters No. 3 and No. 4 are given a full backwash in the sequence described above for Filters No. 1 and No. 2. This same sequence continues for the remaining filters in the east group. After Filters No. 9 and No. 10 have been given a full backwash, all filters return to normal filtering and nitrogen release cycles until the NRC counter again counts out at 12.

NOTES

The four nitrogen release cycles which precede the full backwashing of Filters No. 3 and No. 4, No. 5 and No. 6, No. 7 and No. 8, and No. 9 and No. 10 are NOT counted by the NRC counter. The first NRC after Filters No. 9 and No. 10 are backwashed is count No. 1 on the NRC counter.

(3) START-UP, SHUTDOWN AND DEWATERING PROCEDURES

To start up, shut down or dewater the Denitrification Filters, use the following procedures:

a. START-UP

- Open manually operated suction and discharge valves for Pumps FB1-BWP-1 and 3 (refer to the section headed "Filter Building Nos. 1 and 2 and Junction Chamber No. 6" for complete backwash water pump start-up procedure).

- Place the OFF/TEST-AUTO selector switch for Pumps FB1-BWP-1 and 3 on MCC-58 in the AUTO position.

- Open the manually operated discharge valve for Blower FB1-BWB-1 or 2 (refer to the section headed "Filter Building Nos. 1 and 2 and Junction Chamber No. 6" for complete backwash air blower start-up procedure).

- Place the OFF/TEST-AUTO selector switch for Blower FB1-BWB-1 or 2 on MCC-57 in the AUTO position.

- Place the EAST GROUP/OFF/WEST GROUP selector switch for FB1-BWP-2 in the OFF position.

- Place the BLOWER NO. 1/OFF/BLOWER NO. 2 selector switch to operate the selected blower.

- Make sure the plant air system is operating and open plant air supply line valves to the bubbler tubes in each filter.

- On each individual filter liquid level controller, place the AUTO-MANUAL switch in the AUTO position and the LOCAL-REMOTE in the REMOTE position.

- On each filter group liquid level controller, place the OFF-CLOSE-AUTO-MANUAL switch in the AUTO Position and turn the set point dial to the desired value (an initial value of 15.75 is recommended).

- For each set of group nitrogen release cycle (NRC) controls set the NRC timer and the nitrogen release backwash water timer as shown in Table III-FL-DF-4.

- For each set of group full backwash cycle controls set the NRC counter, the pre-air timer, the air-water backwash timer and the post backwash water timer as shown in Table III-FL-DF-4

- Place the MANUAL-SEMIAUTO-AUTO selector switch for each filter in the AUTO position. Group filtering, nitrogen release and full backwash cycles as described hereinbefore under "Normal Operation" now begin.

b. SHUTDOWN

- Place the MANUAL-SEMIAUTO-AUTO selector switch for the filter to be shut down in the MANUAL position.

c. DEWATERING

- Shut down the filter as described above.
- Open the two associated 8-inch manually operated drain valves (see Figure III-FL-DF-2).

(4) ALTERNATE OPERATION

a. SEMIAUTOMATIC OPERATION

Under semiautomatic operation, an individual filter may be taken out of the automatic mode and be run through an individual NRC or full backwash.

The semiautomatic NRC operations occur as follows:

- Place the MANUAL-SEMIAUTO-AUTO selector switch for the selected filter in the SEMIAUTO position.

- The influent valve to the selected filter closes and the effluent control valves from the selected filter close. The filter is now off line.

- Turn the NRC Filter selector switch to the selected filter

- Set the associated semiautomatic mode NRC backwash timer as shown in Table III-FL-DF-4.

- Depress the semiautomatic NRC START push button.

NOTE

If any other program (automatic NRC, automatic full backwash cycle, semiautomatic full backwash or a high water level alarm backwash) is currently

in progress the semiautomatic NRC will not proceed until that program is complete.

- Backwash drain valve from the selected filter opens
- Two backwash water valves to selected filter open
- Backwash water pump starts
- Semiautomatic mode NRC backwash water timer begins timing
- Semiautomatic mode NRC backwash water timer times out and resets
- Backwash water pump shuts down
- Two backwash water valves to selected filter close

The semiautomatic NRC is complete. The influent valve and the two effluent control valves to the selected filter will remain closed until the MANUAL-SEMIAUTO-AUTO selector switch is placed in the AUTO position.

The semiautomatic full backwash operations occur as follows:

- Place the MANUAL-SEMIAUTO-AUTO selector for the selected filter in the SEMIAUTO position.
- The influent valve to the selected filter closes and the effluent control valves from the selected filter close. The filter is now off line.
- Turn the full backwash filter selector switch to the selected filter.
- Set the associated semiautomatic mode full backwash timer as shown in Table III-FL-DF-4.
- Depress the semiautomatic full backwash START push button.

NOTE

If any other program (automatic NRC, automatic full backwash cycle, semiautomatic NRC or a high water level alarm backwash) is currently in progress the semiautomatic full backwash will not proceed until that program is complete.

- Two effluent control valves from the selected filter open.

- Water level in selected filter drains down to Elevation 13.50'.
- Two effluent control valves from selected filter close.
- Backwash drain valve from the selected filter opens.
- Backwash air valve to the selected filter opens.
- Backwash air blower starts.
- Semiautomatic mode pre-air timer begins timing.
- While the selected filter is in pre-air backwash the two backwash water valves open.
- The backwash water pump starts.
- The semiautomatic mode pre-air timer times out and resets and simultaneously the semiautomatic mode air-water backwash timer begins timing.
- The semiautomatic mode air-water backwash timer times out and resets and simultaneously the semiautomatic mode post-water backwash timer begins timing.
- The backwash air blower shuts down.
- The backwash air valve to the selected filter closes.
- The semiautomatic mode post-water backwash timer times out and resets.
- The backwash water pump shuts down.
- Two backwash water valves to the selected filter close.
- The backwash drain valve from the selected filter closes.

The semiautomatic full backwash is complete. The influent valve and the two effluent control valves to the selected filter will remain closed until the MANUAL-SEMIAUTO-AUTO selector switch is placed in the AUTO position.

b. MANUAL OPERATION

Under manual operation, an individual filter may be taken out of the automatic mode by placing the MANUAL-SEMIAUTO-AUTO selector switch for the selected filter in the MANUAL position. To perform a NRC or full backwash on the selected filter, all valves must be manually operated at the valve and the backwash air blower and backwash water pump must be manually started and stopped.

(5) MONITORS AND ALARMS

The Filter Building Panel - Filter Section (FBPFS) is provided with position indicating lights and operational indicating lights for the associated valves and equipment (refer to the subsection headed "Description"). The FBPFS is also provided with an annunciator panel with audible and visual alarms for each filter for each of the following alarms:

- Filter cycle high water
- Filter cycle malfunction
- NRC malfunction
- Full backwash malfunction

Other alarms which are associated with the Denitrification Filters and which are provided on the FBPFS annunciator are as follows:

- East Group - Filter cycle low water
- East Group - Filter cycle high water
- West Group - Filter cycle low water
- West Group - Filter cycle high water
- East backwash water relief flowing
- West backwash water relief flowing

NOTE

The backwash water relief alarms are presently (October 1991) disconnected due to nuisance tripping. The operators are cautioned to visually observe overflow at the relief pipes. See subsection headed normal operation.

The Remote Transmission Units in the Filter Building Control Room scan and transmit the condition of all alarm points on the FBPFS annunciator to the Computer Logger in the Process Control Room in the Main Pumping Station. Individual alarms are displayed by the Computer Logger.

E. DENITRIFICATION FILTER NOS. 21-26 AND 31-36 CONTROL SYSTEM

(1) DESCRIPTION

The Denitrification Filters control system is provided to automatically control the filtering, nitrogen release cycle (NRC) and full backwash cycles of the Denitrification Filters.

The Denitrification Filters Control System for Denitrification Filter Nos. 21-26 and Nos. 31-36, includes five main subsystems: (1) the programmable controllers in Filter Building No. 1, (2) the single loop analog controllers in Filter Building No. 1, (3) the Operator Work Station(personal computer based) in Filter Building No. 1, (4) the control panel in Filter Building No. 2, and (5) the control console in Filter Building No. 1.

Two (redundant) G.E., Series Six programmable controllers located in Filter Building No. 1 have been furnished for each group of six filters. The redundant controllers provide the sequential logic functions, math calculations, timers and counter functions to control the filter backwash and NRC sequences. Each programmable controller operates independently. Failure of either unit does not affect the operation of the other. Each PLC has a redundant, hot-standby unit for backup in case of PLC failure.

The two programmable controllers are each configured with inputs and outputs for their respective group of filters. In addition, certain inputs and outputs (backwash pumps, blowers and isolation valves) which are not dedicated to a given filter group are monitored by both programmable controllers.

Single loop analog controllers, located in Filter Building No. 1, control the filter effluent rate in response to filter level, as well as control the backwash flow rate.

The Operator Work Station located in Filter Building No. 1 serves as the Man-Machine interface for the system and allows the operator to perform the following functions:

- View any monitored variable in graphic format
- Change backwash or NRC sequence time settings
- Change backwash or NRC flow set points
- Initiate a filter backwash and NRC sequence
- View the current alarm summary
- Develop and down load new backwash sequence controls

The Control Panel in Filter Building No. 2 contains GE Genius Input/Output (I/O) Blocks for transferring input and output information between Filter Building No. 2 and the PLC units in Filter Building No. 1. In addition, the Control Panel in Filter Building No. 2 displays the status of Filter operations.

Control Selection can be made from the filter selector switches in Filter Building No. 2. The control panel located in Filter Building No. 2 is considered the "Local panel". The control console located in Filter Building No. 1 is considered the "Remote" panel. Each selector switch on the control panel located in Filter Building No. 2 is labeled MANUAL-OFF-LOCAL SEMIAUTO-REMOTE. Control mode selection from the selector switches in the Filter Building No. 1 Control Console can only be made when the respective filter selector switch on the control panel located in Filter Building No. 2 is placed in the REMOTE position. A filter mode selector switch in the Filter Building No. 1 Control Console for each filter is labeled MANUAL-SEMIAUTO-AUTO.

Typical controls for each individual filter at the Filter Building No. 1 Control Console and at the Control Panel in Filter Building No. 2 consist of the following:

- Filter Off - Indicating Light
- Filter Alarm - Indicating Light
- Normal Filtration - Indicating Light
- Nitrogen Release Cycle - Indicating Light
- Full Backwash - Indicating Light
- Filter Mode Selector Switch-MANUAL-SEMIAUTO-AUTO (Filter Building No. 1), MANUAL-OFF-LOCAL-SEMIAUTO-REMOTE (Filter Building No. 2)
- Effluent Control Valve OPEN-CLOSE-AUTO selector switch
- Effluent Control Valve - Position Indicator
- Effluent Control Valve - Position Indicating Lights
- Influent Valve OPEN-CLOSE-AUTO selector switch
- Influent Valve - Position Indicating Lights
- Backwash Water Valve - OPEN-CLOSE-AUTO Selector Switch
- Backwash Water Valve - Position Indicating Lights
- Backwash Air Valve - OPEN-CLOSE-AUTO Selector Switch
- Backwash Air Valve - Position Indicating Lights
- Backwash Drain Valve - OPEN-CLOSE-AUTO Selector Switch
- Backwash Drain Valve - Position Indicating Lights
- Individual Filter Liquid Level Indicator/Controller (Controller at Filter Building No.1 Control Console only)

In addition to the above, a "Filter Group Liquid Level Controller" is provided for each group of filters (at Filter Building No. 1 Control Console only).

Typical controls for the east and west filter groups for nitrogen release cycle (NRC) consist of the following:

- Indicating Lights
- Semiautomatic Mode Filter Selector Switch with START-STOP Push Button
- Semiautomatic Mode Nitrogen Release Backwash Water Timer
- Semiautomatic Backwash Water Timer Inhibit switch and Reset Button
- Automatic Mode NRC Timer and NRC Backwash Water Timers are controlled through the computer based operator work station.

Typical controls for the east and west filter groups for full backwash cycle consist of the following:

- Indicating Lights
- Semiautomatic Mode Filter Selector Switch with START-STOP Push Buttons
- Semiautomatic Mode Pre-Air Timer
- Semiautomatic Pre-Air Timer Inhibit switch and Reset Button
- Semiautomatic Mode Air-Water Backwash Timer
- Semiautomatic Air-Water Backwash Timer Inhibit Switch and Reset Button

- Semiautomatic Mode Post Backwash Water Timer
- Semiautomatic Post Backwash water Timer Inhibit Switch and Reset Button
- Automatic Mode NRC Cycle Counter, Pre-Air Timer, Air-Water Backwash Timer, and Post Backwash Timers are controlled through the Operator Work Station.

The annunciator panels on the Filter Building No. 2 Control Panel and the Filter Building No. 1 Control Console provide audible and visual indication of all alarms associated with the Denitrification Filters as described hereafter. Each annunciator panel is provided with TEST, RESET and SILENCE push buttons.

The backwash water pumps and backwash water rate controller controls consist of the following:

- Pump On - Indicating Light, each Pump
- Pump in Service - Indicating Light, each Pump
- Pump RUN-OFF-AUTO selector switch
- Selector Switches - Assigns Standby Pump FB2-BWP-5 to Service
- Backwash Water Rate Indicator/Controller (at Filter Building No. 1 Control Console only)

The backwash air blowers controls consist of the following:

- Blower On - Indicating Lights
- Blower in Service - Indicating Light, each Blower
- Blower RUN-OFF-AUTO selector switch
- Selector Switches - Assigns Standby Blower FB2-BWB-4 to Service

(2) NORMAL OPERATION

a. FILTER BUILDING NO. 2 CONTROL PANEL SELECTOR SWITCHES

If a filter MANUAL-OFF-LOCAL SEMIAUTO-REMOTE selector switch is placed in the MANUAL position, the FIV, BWV, BDV, FEV and BAV selector switches for that filter will control the operation of the respective filter valves as a manual override. The PLC in Filter Building No. 1 is isolated from control of the filter except the PLC will continue to monitor for alarms. NRC and Backwash timers are inactive.

If a filter MANUAL-OFF-LOCAL SEMIAUTO-REMOTE switch is placed in the OFF position, all controls for that filter are removed from service. In the OFF mode, the filter is out of service and the filter influent valve will automatically close. The NRC and Backwash sequences will bypass any filter in the MANUAL, OFF or LOCAL SEMIAUTO mode. The PLC in Filter Building No. 1 will continue to monitor for alarms.

If a filter MANUAL-OFF-LOCAL SEMIAUTO-REMOTE selector switch is placed in the LOCAL SEMIAUTO position, the selected filter can be individually sequenced through an NRC or Full Backwash Cycle. The Filter Building No. 2 Filter Select, START-STOP push buttons, Backwash Water Pump NORMAL-STANDBY, Backwash Air Blower NORMAL-STANDBY selector switches and NRC and Backwash timers for that filter are active for NRC and Backwash sequences

in SEMIAUTO mode. Filter Building No. 1 controls are inactive. The PLC in Filter Building No.1 is isolated from control of the filter except the PLC will continue to monitor for alarms.

If a filter MANUAL-OFF-LOCAL SEMIAUTO-REMOTE selector switch is placed in the REMOTE position, the control of that filter and its valves is determined by the mode selector switch in Filter Building No. 1. All local selector switches, timers, etc., on the Filter Building No. 2 Control Panel are inactive.

b. FILTER BUILDING NO. 1 CONTROL CONSOLE SWITCHES

The following assumes the filter MANUAL-OFF-LOCAL SEMIAUTO-REMOTE selector switch on the Filter Building No. 2 control panel IS SET TO REMOTE. This hands off control of the filters to the Filter Building No. 1 Control Console.

If a Filter Building No. 1 Control Console MANUAL-SEMIAUTO-AUTO filter selector switch is placed in MANUAL, position the FIV, BWV, BDV, BAV and FEV selector switches for that filter on the Filter Building No. 1 Control Console will control the operation of the respective valves as a manual override. FIV, BWV, BDV, BAV and FEV selector switches are wired to PLC inputs and provide a manual override programmed in the PLC logic.

If a Filter Building No. 1 Control Console MANUAL-SEMIAUTO-AUTO filter selector switch is placed in the SEMIAUTO position the selected filter can be individually sequenced through a NRC or Full Backwash cycle. The Filter Building No. 1 Filter Select, START-STOP push buttons, NRC and Backwash timers and Backwash Water Pump NORMAL-STANDBY and Backwash Air Blower NORMAL-STANDBY selector switches for that filter are active for NRC and Backwash sequences in SEMIAUTO mode. An NRC or Full Backwash sequence for filters in the same group cannot be selected simultaneously. Filter Building No. 2 controls are inactive.

If a Filter Building No. 1 Control Console MANUAL-SEMIAUTO-AUTO filter selector switch is placed in the AUTO position, an automatic NRC or Full Backwash sequence will be initiated from the PLC Controller. Adjustments to set points for the AUTO mode are mode through the Operator Work Station.

In the AUTO mode, the filter controls are designed to maintain a constant liquid level in each filter by modulating the filter effluent valve in response to a control signal from a corresponding level indicating controller at the Filter Control Console. The operating level set point for each filter is independently adjustable but normally is set by the Master Group Filter Level manual loading station.

The level control system automatically closes the filter effluent valve when the liquid level drops to prevent uncovering the media on loss of filter influent. The initial filter level set point is Elevation 15.75 (zero reference bubbler is Elevation 12.5). Controls are arranged so that no filter

will be allowed to go "on-line" (influent valve open) if the filter's manual drain valve is not fully closed.

c. GENERAL FILTER OPERATION: AUTO OR SEMI-AUTO

Each filter in AUTO mode will automatically sequence through an NRC or Full Backwash Cycle. The filter is normally in the filtering mode (on-line) unless the PLC controller commands a filter to be placed in the NRC or Full Backwash Cycle.

CAUTION

The backwash water piping for each filter group has been provided with an adjustable overflow relief pipe that discharges into filter influent conduit. Some minor discharge form the relief pipe may occur at the start of a Backwash or NRC Cycle. Continuous flow from this pipe during a Backwash or NRC Cycle indicates possible excessive pressure under the precast concrete filter bottom, which can cause lifting of the filter bottoms resulting in serious damage. The Backwash or NRC Cycle should be aborted if continuous flow occurs.

An individual NRC or Full Backwash Cycle sequence can be initiated in Filter Building No. 1 when the selected filter is in the SEMIAUTO or the AUTO mode. Turn the NRC or Full Backwash filter selector switch to the selected filter position. Depress the start push button to start the sequence. Depressing the stop push button stops the sequence selected. An NRC and Full Backwash sequence cannot be selected simultaneously, only one sequence can be active at a time.

If an individual NRC cycle is selected for operation, the corresponding NRC water timer must be set for the desired time.

If a full backwash cycle is selected for an individual operation, three timers must be set. The Backwash Pre-Air timer, Backwash Air-Water timer, Backwash Post Water timer.

Each NRC water time, Backwash Pre-Air timer, Backwash Air-Water timer, and Backwash Post Water timer is provided with an Inhibit Switch and a Reset Button. When the Inhibit Switch is turned to the ON position the associated timer will stop until the Inhibit Switch is turned to the OFF position where the timer will continue to time down. When the Reset Button is pushed the timer will go to zero.

If an individual NRC or Full Backwash Cycle is selected at Filter Building No. 1, the following occurs:

- If the filter's mode selector is in AUTO position, the filter immediately returns to service following the wash cycle.

- If the filter's mode selector is in the SEMI-AUTO position, the filter remains off-line when the wash cycle is complete.

If an individual NRC or Full Backwash Cycle is selected at Filter Building No. 2, the filter remains off-line when the wash cycle is complete. The selector switch for that filter at Filter Building No. 2 must be in the LOCAL SEMI-AUTO mode to initiate an individual NRC or full backwash.

NOTE

If a filter is in a wash cycle, changing the position of that filter's mode selector at Filter Building No. 1 or Filter Building No. 2 will abort the cycle and place the filter in the newly selected mode as follows:

FB #1 AUTO and FB #2 REMOTE - filter returns to service
FB #1 SEMIAUTO and FB#2 REMOTE - filter goes off-line
FB #1 MANUAL and FB#2 REMOTE - valves move to position set on individual valve control switches at FB #1
FB #2 LOCAL SEMIAUTO - filter goes off-line
FB #2 MANUAL - valves move to position set on individual valve control switches at FB #2
FB #2 OFF - filter goes off-line with influent valve closed

The PLC will control the automatic sequencing for each NRC and Full Backwash Cycle if it receives a request from the graphics computer and the mode switches in Filter Building Nos. 1 and 2 are set for AUTO and REMOTE respectively.

d. AUTOMATIC NITROGEN RELEASE CYCLE (NRC) CONTROL

The group nitrogen release cycle controls are designed to operate each filter group independently. A group NRC can be initiated in one of two ways:

- OPERATOR SELECTION FROM THE WORK STATION - Any filter can be taken off-line and run through an individual NRC. Once activated, the NRC sequence for that filter proceeds automatically. Also, an entire group NRC activation can be initiated from the work station keyboard. The operator request will interrupt the current backwash cycle or inserted

as the next filter in the group NRC cycle. After the individual NRC the program will return to the place it was interrupted.

- AUTOMATICALLY - Each filter group has an NRC interval timer setting from the keyboard along with a timer setting for NRC duration. The interval setting controls the time between group nitrogen release cycles. The duration setting controls the amount of time washwater is applied to each filter during the NRC.

Only one filter in a group will can be washing at any time. While one filter is washing, the next filter in the sequence goes off-line in preparation for NRC washing. Only two filters in a group are off-line at any time (unless either of another filter's filter mode selector switches in the Filter Building Nos. 1 and 2 are not set for AUTO and REMOTE, respectively.

e. AUTOMATIC FULL BACKWASH CYCLE CONTROL

The Automatic Full Backwash Cycle Controls are designed to operate each filter group independently. A Full Backwash Cycle can be initiated in one of two ways:

- OPERATOR SELECTION FROM THE WORK STATION - Any filter can be taken off-line and backwashed from the work station keyboard. Once initiated, the backwash sequence proceeds automatically. Full backwash of an entire filter group can be initiated from the work station keyboard. Once initiated, each filter in the corresponding group backwashes, sequentially with a group NRC following each pair of filters.

- MASTER NRC COUNTER - The system has a master counter for each filter group which is adjusted from the work station keyboard. The settings for the two filter groups are independent. The controls initiate a group Full Backwash Cycle after a preset number of group Nitrogen Release Cycles.

Only one filter in a given pair will backwash at any given time. The sequence for the second filter will resume when the preceding filter has completed its backwash sequence and returned to service. No more than one filter will be off-line at any given time in the group (unless either of another filter's, filter mode selector switches in the Filter Building Nos. 1 and 2 are not set for AUTO and REMOTE, respectively.

The full backwash sequence backwashes two filters sequentially, with an adjustable time delay between the two. A group NRC cycle occurs after the full backwash of the pair is complete and an adjustable time delay. Immediately after the group NRC, the next two filters backwash in sequence, followed by another group NRC. This cycle continues until all filters in the group have gone through a full backwash. At this point, the Master NRC counter resets.

The control system automatically skips a filter which is not in the AUTO mode.

The full backwash sequence consists of three stages:

PRE-AIR	(0-15.0 minutes)
AIR-WATER	(0-60.0 minutes)
POST WATER	(0-30.0 minutes)

The NRC sequence consists of a single stage per filter (0-10 min.).

The duration of each stage is set from the work station keyboard. Settings for the two filter groups are independent. Table III-FL-DF-5 presents suggested initial set points for timers and other controls which control the above variables.

f. COMMON CONTROLS AND ALARMS

The control system automatically starts and stops the backwash air blowers and backwash water pumps. The control system opens and closes the appropriate valves as detailed below in the sequence of the operation. Each step in the sequence is confirmed before the sequence proceeds. Failure for any sequence step activates the common filter alarm on the Filter Control Console (FCC) in Filter Building No. 1 and on the Filter Control Panel (FCP) in Filter Building No. 2 annunciators and the corresponding filter alarm light on the filter switch plate. The exact sequence alarm (valve fail to open or close, pump or blower fail to start or stop) is displayed on the alarm summary display screen at the work station. The exact sequence alarm is printed on the alarm printer.

g. BACKWASH AIR BLOWERS

The air blowers are designed to have one blower in service for each filter group plus one standby. Blower No. 5 is dedicated to the East Group and Blower No. 4 is dedicated to the West Group. Blower No. 3 can be used for either group or for Denitrification Filter Nos. 1-20.

NOTE

Valving is available to allow Blower No. 3 to be used as backup to Filters No. 1-20 as shown on Figure III-FL-DF-7; however, use of Blower No. 3 for Filters No. 1-20 would need to be completely manual. The controls for Filters No. 1-20 do not include acknowledgment of Blower No. 3.

The operator selects the blower to be used with a group at the FCC or FCP. The backwash control system automatically starts the selected air blower as long as the isolation valves are in the proper position for the selected blower. The system will alarm and the selected blower will not start if the valves are not in the proper position. Failure of the selected blower to start when called for generates a sequence failure alarm and stops the backwash sequence.

The backwash air blower graphic display at the Operator Work Station allows the operator to determine if the isolation valves have been properly positioned. If manual operation of the blowers

is desired, the control selector switch must be in MANUAL at the Filter Building No. 2 FCP or the Filter Building No. 1 FCC. It is also possible to manually run the blower from the Operator Work Station at Filter Building No. 1.

h. BACKWASH WATER PUMPS

The backwash water pumps are designed to have one pump dedicated to each filter group with one standby pump. The operator selects the pump to be used with a group at the FCC or FCP. The backwash control system automatically starts the selected pump as long as isolation valves are properly positioned. If the valves are improperly positioned, the system alarms and the selected pump will not start. Failure of the selected pump to start when called for generates a sequence failure alarm and stops the backwash or NRC sequence.

The filters are designed for a backwash rate of 6 gpm per square foot of surface area during the Air/Water Backwash sequence and for 8 gpm per square foot of surface area during the NRC and Post Water Backwash sequences. The backwash water rate for each group is adjustable from the Operator Work Station keyboard.

The selected backwash pump starts against a closed rate control valve. After the pump has started the rate control valve will open and modulate to regulate the proper backwash set point. The control system automatically closes the appropriate rate control valve when the pump for the corresponding filter group stops. If the pump fails to start, the system alarms and the backwash sequence stops.

The backwash water pump graphic display at the Operator Work Station allows the operator to determine if the isolation valves are properly positioned.

If manual operation of the backwash pumps is desired, the control selector switch on the FCP in Filter Building No. 2 or on the FCC in Filter Building No. 1 must be in manual. It is also possible to start the backwash pumps manually from the Operator Work Station keyboard at Filter Building No. 1.

i. AUTOMATIC SEQUENCING

Under normal operation, for each group of filters, the filtering, nitrogen release and full backwash cycles will occur as follows (assume that all timers and counters are set as shown in Table III-FL-DF-5, operation for each group of filters described, west group operation similar):

- All filters in group in normal filtering cycle
- After 2 hours, automatic mode NRC timer times out (refer to Figure III-FL-DF-10)
- Influent valve to Filter No. 21 closes (all other filters continue normal).
- Effluent control valve for Filter No. 21 closes
- Backwash drain valve for Filter No. 21 opens
- Backwash water valve to Filter No. 21 opens
- Backwash water pump starts

- Automatic mode NRC backwash water time begins timing
- While Filter No. 21 is in the NRC backwash, the influent valve to Filter No. 22 closes (all other filters continue normal filtering)
- Effluent control valve from Filter No. 22 closes
- Backwash drain valve from Filter No. 22 opens
- Backwash water valve to Filter No. 22 opens
- Automatic mode NRC timer times out and resets
- Backwash water valve to Filter No. 21 closes
- Backwash drain valve from Filter No. 21 closes
- Effluent control valves from Filter No. 21 opens
- Influent valve to Filter No. 21 opens and Filter No. 21 returns to normal filtering cycle

The remaining filters in the east group continue to sequence through the nitrogen release cycle as shown on Figure III-FL-DF-9. After the automatic mode NRC timer times out in Filter No. 26, the backwash water pump shuts down. One count is registered on the NRC counter. All ten filters are again in a normal filtering cycle for the next four hours until the automatic mode timer again times out.

Immediately after the east group of filters have gone through the twelfth NRC, the NRC counter counts out and initiates a full backwash cycle as follows:

- Influent valve to Filter No. 21 closes (all other filters continue normal filtering, refer to Figure III-FL-DF-11)
- The liquid level in Filter No. 21 drains down to Elevation +13.50'.
- Effluent control valves from Filter No. 21 closes
- Backwash drain valve from Filter No. 21 opens
- Backwash air valve to Filter No. 21 opens
- Backwash air blower starts
- Automatic mode pre-air timer begins timing
- While Filter No. 21 is in pre-air backwash the backwash water valve opens
- The backwash water pump starts
- The automatic mode pre-air timer times out and resets and simultaneously the automatic mode air-water backwash timer begins timing
- The automatic mode air-water backwash timer times out and resets and simultaneously the automatic mode post-water backwash timer begins timing
- The backwash air blower shuts down
- The backwash air valve to Filter No. 21 closes
- The automatic mode post-water backwash timer times out and resets
- The backwash water pump shuts down
- Backwash water valve to Filter No. 21 closes
- The backwash drain valve from Filter No. 21 closes
- Effluent control valve from Filter No. 21 opens
- Influent valve to Filter No. 21 opens and Filter No. 21 returns to normal filtering cycle

The automatic mode interval timer between backwashing adjacent filters begins timing. After forty five minutes, the timer times out, resets and initiates a full backwash for Filter No. 22 as described above for Filter No. 21.

After Filter No. 22 has gone through a full backwash and has returned to normal filtering, automatic mode interval timer between last full backwash and next full backwash after the following NRC begins timing. (Refer to Figure III-FL-DF-9). After forty five minutes, this timer (T8) times out and initiates a group NRC, immediately after which Filters No. 23 and No. 24 are given a full backwash in the sequence described above for Filters No. 21 and No. 22. This same sequence continues for the remaining filters in the east group. After Filters No. 25 and No. 26 have been given a full backwash, all filters return to normal filtering and nitrogen release cycles until the NRC counter again counts out at 12.

NOTES

The two nitrogen release cycles which precede the full backwashing of Filters No. 23 and No. 24, and No. 25 and No. 26, are NOT counted by the NRC counter. The first NRC after Filters No. 25 and No. 26 are backwashed is count No. 1 on the NRC counter.

If a Semiautomatic NRC or Full Backwash Cycle is selected when an Automatic NRC or Full Backwash is in progress, the PLC will interrupt the Automatic sequence at the end of the NRC or Full Backwash of a filter and proceed with the Semiautomatic NRC or Full Backwash Cycle selected. After completion of the Semiautomatic sequence the PLC will return the program to the place that it was interrupted and resume the Automatic sequence.

(3) START-UP, SHUTDOWN AND DEWATERING PROCEDURES

To start up, shut down or dewater the Denitrification Filters, use the following procedures:

a. START-UP

- Verify the Backwash Pump selector switch on the FCC is positioned for the desired pump and open manually operated suction and discharge valves for the selected Backwash Pumps FB2-BWP-4, 5 and 6 (refer to the section headed "Filter Building Nos. 1 and 2 and Junction Chamber No. 6" for complete backwash water pump start-up procedure).

- Place the LOCAL-OFF REMOTE selector switches for selected Backwash Pumps FB2-BWP-4, 5 and 6 on MCC-86 in the REMOTE position.

- Place the RUN-OFF-AUTO Backwash Pump selector switch on the FCP and FCC in the AUTO position.

- Verify the Backwash Blower selector switch on the FCC is positioned for the desired blower and open the manually operated discharge valves for the selected Backwash Blowers FB2-BWB-3, 4 and 5 (refer to the section headed "Filter Building Nos. 1 and 2 and Junction Chamber No. 6" for complete backwash air blower start-up procedure).

- Place the LOCAL-OFF-REMOTE selector switches for the selected Backwash Blower FB2-BWB-3, 4 and 5 on MCC-86 in the REMOTE position.

- Place the RUN-OFF-AUTO Backwash Blower selector switch on the FCP and FCC in the AUTO position.

- Verify that manual drain valves for each filter are closed.

- Make sure the plant air system is operating and open plant air supply line valves to the bubbler tubes in each filter.

- On each individual filter liquid level controller, place the AUTO-MANUAL switch in the AUTO position and the LOCAL-REMOTE in the REMOTE position.

- On each filter group liquid level controller, place the OFF-CLOSE-AUTO-MANUAL switch in the AUTO Position and turn the set point dial to the desired value (an initial value of 15.75 is recommended).

- For each set of group nitrogen release cycle (NRC) controls, at the operator work station keyboard set the NRC timer and the nitrogen release backwash water timer as shown in Table III-FL-DF-5.

- For each set of group full backwash cycle controls, at the operator work station keyboard set the NRC counter, the pre-air timer, the air-water backwash timer and the post backwash water timer as shown in Table III-FL-DF-5

- Place the MANUAL-OFF LOCAL SEMIAUTO-REMOTE selector switch on the Filter Building No. 2 FCP for each filter in the REMOTE position.

- Place the MANUAL-SEMIAUTO-AUTO selector switch on the Filter Building No. 1 FCC for each filter in the AUTO position. Group filtering, nitrogen release and full backwash cycles as described hereinbefore under "Normal Operation" now begin.

b. SHUTDOWN

- Place the MANUAL-SEMIAUTO-AUTO selector switch on the Filter Building No. 1 FCC for the filter to be shut down in the MANUAL position, or place the MANUAL-OFF-LOCAL SEMIAUTO-REMOTE selector switch for the filter to be shutdown on the Filter Building No. 2 FCP in the OFF position.

c. DEWATERING

- Shut down the filter as described above.

- Open the associated 8-inch manually operated drain valve (see Figure III-FL-DF-3).

(4) ALTERNATE OPERATION

a. SEMIAUTOMATIC OPERATION

Under semiautomatic operation, an individual filter may be taken out of the automatic mode and run through an individual NRC or full backwash at the Filter Building No. 1 Filter Control Console (FCC) or at the Filter Building No. 2 Filter Control Panel (FCP).

The semiautomatic NRC operations occur as follows:

- Place the MANUAL-SEMIAUTO-AUTO selector switch on the Filter Building No. 1 FCC for the selected filter in the SEMIAUTO position or place the MANUAL-OFF-LOCAL-SEMIAUTO-REMOTE selector switch on the Filter Building No. 2 FCP for the selected filter in the LOCAL SEMIAUTO position.

- The influent valve to the selected filter closes and the effluent control valve from the selected filter closes. The filter is now off line.

- Turn the NRC Filter selector switch to the selected filter

- Set the associated semiautomatic mode NRC backwash timer as shown in Table III-FL-DF-5

- Depress the semiautomatic NRC START push button.

NOTE

If any other program (automatic NRC or automatic full backwash cycle) is currently in progress the PLC will interrupt the program and complete the Semiautomatic NRC. After the Semiautomatic NRC is complete the PLC will return the automatic program to the point it was interrupted and resume the automatic sequence.

- Backwash drain valve from the selected filter opens

- Backwash water valve to selected filter opens
- Backwash water pump starts
- Semiautomatic mode NRC backwash water timer begins timing
- Semiautomatic mode NRC backwash water timer times out and resets
- Backwash water pump shuts down
- Backwash water valve to selected filter closes

NOTE

Each NRC water timer is provided with an Inhibit Switch and a Reset Button. When the Inhibit Switch is turned to the ON position the timer will stop until the Inhibit Switch is turned to the OFF position where the timer will continue to time down. When the Reset Button is pushed the timer will go to zero.

The semiautomatic NRC is complete. The influent valve and the effluent control valve to the selected filter will remain closed until the MANUAL-SEMIAUTO-AUTO selector switch on the Filter Building No. 1 FCC is placed in the AUTO position and the MANUAL-OFF-LOCAL-SEMIAUTO-REMOTE selector switch on the Filter Building No. 2 FCP is placed in the REMOTE position.

The semiautomatic full backwash operations occur as follows:

- Place the MANUAL-SEMIAUTO-AUTO selector switch on the Filter Building No. 1 FCC for the selected filter in the SEMIAUTO position, or place the MANUAL-OFF-LOCAL SEMIAUTO-REMOTE selector switch on the Filter Building No. 2 FCP for the selected filter in the LOCAL-SEMIAUTO position.
- The influent valve to the selected filter closes and the effluent control valve from the selected filter closes. The filter is now off line.
- Turn the full backwash filter selector switch to the selected filter.
- Set the associated semiautomatic mode full backwash timers as shown in Table III-FL-DF-5
- Depress the semiautomatic full backwash START push button.

NOTE

If any other program (automatic NRC or automatic full backwash cycle) is currently in progress the PLC will interrupt the program and complete the semiautomatic full backwash. After the semiautomatic full backwash is completed the PLC will return the automatic program to the point it was interrupted and resume the automatic sequence.

- Effluent control valve from the selected filter opens.
- Water level in selected filter drains down to Elevation 13'-6".
- Effluent control valves from selected filter closes.
- Backwash drain valve from the selected filter opens.
- Backwash air valve to the selected filter opens.
- Backwash air blower starts.
- Semiautomatic mode pre-air timer begins timing.
- While the selected filter is in pre-air backwash the backwash water valve opens.
- The backwash water pump starts.
- The semiautomatic mode pre-air timer times out and resets and simultaneously the semiautomatic mode air-water backwash timer begins timing.
- The semiautomatic mode air-water backwash timer times out and resets and simultaneously the semiautomatic mode post-water backwash timer begins timing.
- The backwash air blower shuts down.
- The backwash air valve to the selected filter closes.
- The semiautomatic mode post-water backwash timer times out and resets.
- The backwash water pump shuts down.

- Backwash water valve to the selected filter closes.

- The backwash drain valve from the selected filter closes.

NOTE

Each Backwash Pre-Air timer, Backwash Air-Water timer, and Backwash Post Water timer is provided with an Inhibit Switch and a Reset Button. When the Inhibit Switch is turned to the ON position the associated timer will stop until the Inhibit Switch is turned to the OFF position where the timer will continue to time down. When the Reset Button is pushed the timer will go to zero.

The semiautomatic full backwash is complete. The influent valve and the effluent control valve to the selected filter will remain closed until the MANUAL-SEMIAUTO-AUTO selector switch on the Filter Building No. 1 FCC is placed in the AUTO position and the MANUAL-OFF-LOCAL SEMIAUTO-REMOTE selector switch on the Filter Building No. 2 FCP is placed in the REMOTE position.

b. MANUAL OPERATION

Under manual operation, an individual filter may be taken out of the automatic mode by placing the MANUAL-SEMIAUTO-AUTO selector switch on the Filter Building No. 1 FCC for the selected filter in the MANUAL position of by placing the MANUAL-OFF-LOCAL SEMIAUTO-REMOTE selector switch on the Filter Building No. 2 FCP for the selected filter in the MANUAL position. To perform an NRC or full backwash on the selected filter, all valves may be manually operated at the FCC or FCP. The backwash pumps and backwash blowers may be manually started at the FCC, FCP or MCC-86. Should a communications problem develop between the Filter Building No. 2 FCP and the Filter Building No. 1 FCC, filter functions can be controlled manually at the FCP. All valves and indications for Filter Nos. 21-26 and 31-36 are "hard wired" to the FCP in Filter Building No. 2. The effluent valve controllers on the FCC in Filter Building No. 1 are "hard wired" to the effluent valves and level transmitters. The valve controllers in Filter Building No. 1 will operate if the PLC fails if they are switched to manual control.

(5) MONITORS AND ALARMS

The Filter Building No. 1 Filter Control Console (FCC) and the Filter Building No. 2 Filter Control Panel (FCP) are provided with position indicating lights and operational indicating lights for the associated valves and equipment (refer to the subsection headed "Description"). The FCC and FCP are also provided with annunciator panels with audible and visual common alarms for each filter.

Individual alarms generated by the Filter Controls and by malfunction of associated valves and equipment are logged and displayed by the PLC at the display screen and printer at the operator work station.

The Remote Transmission Units in the Filter Building No. 1 Control Room continuously scan and transmit the condition of all alarm points and running indication to the Computer Logger in the Process Control Room in the Main Pumping Station. Individual alarms and status are displayed by the computer logger.

F. DENITRIFICATION FILTERS LIQUID LEVEL CONTROL SYSTEM

(1) DESCRIPTION

The Denitrification Filters liquid level control system is provided to continuously and automatically measure, indicate and regulate the liquid level in the Denitrification Filters and to alarm high water levels in the east and west influent conduits. Major components of the system include a bubbler tube in each Denitrification Filter, liquid level transmitters housed in liquid level control cabinets (one cabinet is provided for each pair of adjacent filters), liquid level controllers for each filter group liquid level controllers for the east filter groups 1-10 and 21-26 and west filter groups 11-20 and 31-36 on the Filter Building No. 1 Filter Section (FBPFS) and Filter Control Console (FCC) and Filter Building No. 2 Filter Control Panel (FCP), and motor operated effluent control valves for each filter.

(2) NORMAL OPERATION

Under normal operation, when the Denitrification Filters are in the automatic mode and the controls on each individual filter's liquid level controller are arranged as described hereinafter under "Start-Up and Shutdown Procedures" each group liquid level controller will continuously and automatically measure and control each filter's liquid level by causing the motor operated effluent control valves for each filter to modulate to maintain the set point liquid level. The liquid level in each filter is indicated on its associated liquid level controller.

Also, under normal operation, if the liquid level in the east or west influent conduits for Denitrification Filter Nos. 1-20 exceeds Elevation 17.25' an audible and visual alarm will be initiated on the Filter Building No. 1 FBPFS annunciator. If the liquid level in the east or west influent channel for Denitrification Filter Nos. 1-20 continues to rise and exceeds Elevation 18.00', a second audible and visual alarm will occur and the bypass sluice gates will open (refer to the section headed "Filter Building Nos. 1 and 2 and Junction Chamber No. 6"). If the liquid level in the east or west influent channels for Denitrification Filters Nos. 21-26 or 31-36 exceeds Elevation 17.25' are audible and visual alarms will be initiated on the Filter Building No. 1 FCC and on the Filter Building No. 2 FCP annunciators.

(3) START-UP AND SHUTDOWN PROCEDURES

To start up and shut down the Denitrification Filters liquid level control system, use the following procedures:

a. START-UP

Refer to the start up procedures under the subsection headed "Denitrification Filters Control System".

b. HUTDOWN

- Close the plant air supply lime valve to the bubbler tube or tubes in the filters selected to be shut down.

(4) ALTERNATE OPERATION

The liquid level in an individual filter can be controlled at a different elevation than that of the entire group. Place the LOCAL-REMOTE selector switch on the selected filters individual liquid level controller in the LOCAL position and turn and set point dial to the desired value.

(5) MONITORS AND ALARMS

The annunciator panel on the Filter Building No. 1 Panel - Filter Section (FBPFS) contains audible and visual alarms for Denitrification Filters Nos. 1-20 for the following:

- Individual filter cycle high water
- East group filter cycle high water
- East group filter cycle low water
- West group filter cycle high water
- West group filter cycle low water
- High water east influent conduit (El. 17'-3")
- High water east bypass gate open (El. 18'-0")
- High water west influent conduit (El. 17'-3")
- High water west bypass gate open (El. 18'-0")

The annunciator panels on the Filter Building No. 1 Filter Control Console and on the Filter Building No. 2 Filter Control Panel contain audible and visual alarms for Denitrification Filter Nos. 21-26 and 31-36 for the following:

- Common Filter Alarm
- East Influent Channel - High-Level (El. 17'3")
- East Influent Channel - High Level (EL. 17'3")

Individual filter high water alarms for Denitrification Filter Nos. 21-26 and 31-36 are displayed by the computer at the operator work station.

The Remote Transmission Units in the Filter Building No. 1 Control Room continuously scan and transmit the condition of all alarm points to the computer logger in the Process Control Room of the Main Pumping Station. All alarms are received and displayed by the Computer Logger.

G. SUMP PUMP: FB1-SP-4 AND FB2-SP-7, AND 8

The sump pumping equipment includes the sump pump, drive motor, control panel, cover plate and sump level controls. Sump Pump FB1-SP-4 is located in the Filters Access Building for Denitrification Filter Nos. 1-20 and FB2-SP-7 and 8 are located in the Filter Pipe Gallery for Denitrification Filter Nos. 21-26 and 31-36.

For a complete discussion of the sump pumping equipment, operation and control, refer to the section headed "Sump Pumping Equipment".

H. HOISTING EQUIPMENT: FB1-MH-3

The hoisting equipment designated FB1-MH-3 is located in the Filters Access Building and consists of one 5-ton capacity electric motor operated Monorail Hoist.

For a complete discussion of the hoisting equipment, operation and control, refer to the section headed "Hoisting Equipment".

I. PLANT AIR (SEE FIGURES III-SU-UPS-1 THROUGH 3)

The plant air equipment in the Denitrification Filter Nos. 1-20, 21-26 and 31-36 consists of piping and fittings, shutoff valves, hose valve connections, in-line filters, pressure regulating valves and pressure gauges, various solenoid valves, air line lubricators and moisture traps.

Compressed air is supplied to the plant air equipment by the plant air system as described in the sections headed "Main Pumping Station" and "Filter Building Nos. 1 and 2 and Junction Chamber No. 6". The Plant air equipment supplies compressed air to the Denitrification Filters liquid level control system, pneumatically operated valves and to hose connections.

J. PLANT WATER (SEE FIGURES III-SU-UPS-4)

The plant water equipment in the Denitrification Filters consists of piping, fittings and valves and hose hydrants.

Plant water is supplied to the Denitrification Filters by the plant water equipment as described in the section headed "Main Pumping Station". Plant water is used for hosing down the floors and equipment.

K. EFFLUENT WATER (SEE FIGURES III-SU-UPS-5 THROUGH 9)

The effluent water system in the Denitrification Filters consists of piping, fittings, shutoff valves and hose valves.

Effluent water is supplied to the Denitrification Filters by the General purpose effluent water pumps as described in the section headed "Filter Building Nos. 1 and 2 and Junction Chamber No. 6". The effluent water is used for pump seal and lubrication water and for hosing down outside walks.

L. VENTILATION EQUIPMENT: FB2-S-6

(1) DESCRIPTION

Supply Fan FB2-S-6 is provided to supply ventilation to the Filters Access Building and Filters Pipe Gallery for Denitrification Filter Nos. 21-26 and 31-36. The Filter Access Building and Filters Pipe Gallery for Denitrification Filter Nos. 1-20 is ventilated by Supply Fan FB2-S-7 which is located in Filter Building No. 2. For discussion of Supply Fan FB2-S-7 see section headed "Filter Building Nos. 1 and 2 and Junction Chamber No. 6". The ventilation equipment consists of Supply Fan, designated FB2-S-6 and inlet louvers.

Supply Fan FB2-S-6 is a curb mounted centrifugal fan driven by single-speed 1½ horsepower motor. The fan supplies 4000 cubic feet per minute of outside air to the Filter Access Building and Filters Pipe Gallery.

(2) NORMAL OPERATION

Supply Fan FB2-S-6 is provided with an ON-OFF switch, with locking device for the OFF position and TEST button located at the unit. Supply Fan FB2-S-6 is energized by Motor Control Center MCC-86. An ON-OFF AUTO selector switch in Temperature Control Panel FB2-TCP-1, located in Filter Building No. 2, controls the operation of the fan.

Under normal operation, when the ON-OFF-AUTO switch is in the AUTO position, the supply fan will operate continuously through a 7 day time clock.

(3) START-UP AND SHUTDOWN PROCEDURES

To start up or shut down the ventilation equipment, use the following procedures:

a. START-UP

- Adjust the 7 day time clock
- Move the ON-OFF switch at the unit to the ON position
- Close the circuit breaker on Motor Control Center MCC-86.
- Turn the ON-OFF-AUTO selector switch on FB2-TCP-1 to the AUTO position

b. SHUTDOWN

- Turn the ON-OFF-AUTO selector switch on FB2-TCP-1 the OFF position

NOTE

If maintenance is to be performed on the unit, open the circuit breaker on MCC-86 and move the ON-OFF switch at the unit to the OFF position and engage the locking device. Follow approved **Lockout/Tagout** procedures (See Chapter VI, Safety).

(4) MONITORS

The Supply Fan is provided with ON-OFF indicator lights and an elapsed time meter on Motor Control Center MCC-86.

The Supply Fan is provided with a flow switch to indicate fan failure when the fan should be running in the AUTO position. An alarm pilot light on Temperature Control Panel FB2-TCP-1 indicates "Fan Air Flow Failure".

The Remote Transmission Units located in the Control Room of Filter Building No. 1 continuously scan and transmit the condition of all alarms including a common fan failure alarm for Filter Building No. 2 to the Computer Logger in the Process Control Room in the Main Pumping Station. Individual alarms are displayed by the Computer Logger.

M. POWER DISTRIBUTION SYSTEM

The power distribution system is shown in detail on the contract plans and various shop drawings. Refer to Table III-FL-DF-3 Denitrification Filters Nos. 1-20, 21-26 and 31-36 - Facility Equipment Summary for contract plans and shop drawing numbers which pertain to the power distribution system.

III-FL-CHF CHEMICAL HANDLING FACILITIES (042)

A. GENERAL

The chemical handling facilities include the following equipment and systems for the storage and handling of methanol:

- Storage Tanks
- Methanol Unloading Equipment
- Methanol Feed Pumps
- Sump Pump
- Plant Air
- Effluent Water
- Power Distribution System

Refer to Table III-FL-CHF-1, Chemical Handling Facilities - Facility Equipment Summary, for control numbers, manufacturers, equipment capacities, and operation, maintenance, contract plan and shop drawing references. Refer to the Contractor's O & M Manuals for Manufacturer's Service Manual pertaining to chemical handling equipment.

NOTE

Methanol is a potentially dangerous chemical. Information on the handling of methanol is provided in Chapter VI, Safety. An eyewash station is provided at the chemical handling platform near the Methanol Feed Pumps.

B. STORAGE TANKS

(1) GENERAL

The storage tanks in the chemical handling facilities are provided for storage of liquid chemicals on the site. The storage tanks are located south of the Final Sedimentation Tanks.

The storage tanks consist of one methanol storage tank, one brewery waste storage tank, and nine liquid alum storage tanks designated Nos. 1, 2, 3, 4, 5, 6, 7, 8 and 9. The brewery storage tank and the liquid alum storage tanks are no longer in service.

(2) STORAGE TANKS

a. METHANOL STORAGE TANK

The methanol storage tank is provided to store methanol and to supply methanol to the methanol feed pumps (see Figure III-FL-CHF-1).

The methanol storage tank is a vertical fabricated steel tank with a 23-foot-6-inch diameter and a 32-foot side wall height and with a nominal storage capacity of 100,000 gallons.

The methanol storage tank is provided with a Liquid Level Transmitter, designated OG-38, a pressure-vacuum relief vent and flame arrestor, and associated piping, fittings and valves. The tank

is surrounded by a concrete retaining wall designed to contain the contents of a full methanol storage tank if the tank should leak or otherwise fail.

Methanol is transferred to the methanol storage tank from railroad tank cars at Methanol Unloading Stations Nos. 1 and 2, or from tank trucks at the truck unloading station, as described in the subsection headed "Methanol Unloading Equipment"(see Figure III-FL-CHF-1).

NOTE

Combustible gas detection sensors monitor the air at various locations around the methanol storage tank. For a detailed description of the sensors, refer to the subsection headed "Combustible Gas Detection System."

b. BREWERY WASTE STORAGE TANK

The brewery waste storage tank is a vertical fiber glass storage tank with a 12-foot diameter and a 35-foot - 6-inch side wall height with a nominal storage capacity of 29,000 gallons.

The tank is surrounded by a concrete retaining wall designed to contain the contents of a full brewery waste storage tank if the should leak or otherwise fail. The brewery waste storage tank is no longer in service.

c. LIQUID ALUM STORAGE TANKS: NOS. 1, 2, 3, 4, 5, 6, 7, 8, AND 9

Each liquid alum storage tank is a vertical fiber glass storage tank with a 12-foot diameter and a 35-foot - 6-inch side wall height with a nominal storage capacity of 29,000 gallons. The Liquid Alum Storage Tanks are no longer in service.

(3) MONITORS AND ALARMS

The methanol storage tank is provided with a liquid level indicator on the Chemical Handling Equipment Platform Control Cabinet (CHEP-CC) and on the Filter Building Panel-Chemical Handling Section (FBP-CHS). The methanol storage tank is also provided with FULL and OVERFLOW status indicating lights on the CHEP-CC and FULL status indicating lights on the FBP-CHS. The methanol storage tank OVERFLOW alarm also activates an audible alarm on the CHEP-CC. Level indicating for the methanol storage tank will also be relayed to the Computer Logger installed in the Process Control Room.

The methanol storage tank is provided with audible and visual alarm indication for OVERFLOW and EMPTY alarms on the annunciator panel on the Filter Building Panel - Miscellaneous Section (FBPMS).

Scanner-transmitter No. 58 continuously scans and transmits the condition of all alarm points on the FBPMS annunciator to the SCADA System.

C. METHANOL UNLOADING EQUIPMENT: CH-MTP-1 AND 2

(1) DESCRIPTION

The methanol unloading equipment is provided to unload methanol from a railroad tank car or a tank truck to the methanol storage tank or to transfer methanol from the methanol storage tank to a railroad tank car or a tank truck (see Figure III-FL-CHF-1).

The methanol unloading equipment consists of two Methanol Transfer Pumps, designated CH-MTP-1 and 2, two Methanol Unloading Stations, designated Nos. 1 and 2, one truck unloading station, and pneumatically and manually operated valves and controls on the Chemical Handling Equipment Platform Control Cabinet (CHEP-CC).

Each methanol transfer pump is provided with a flow switch and manually operated suction and discharge valves. The pumps are single stage, horizontal, self priming, centrifugal type pumps with associated drive motors. Each pump has the following operating capacities:

Operating Condition	Flow (gpm)	Head (feet)
Unloading from a railroad tank car to storage tank	235	65
Unloading from a truck to storage tank	235	65
Transfer back from storage tank to railroad car	320	57
Transfer back from storage tank to truck	240	61

The methanol unloading stations and the truck unloading station are each provided with a methanol transfer line and a manually operated valve, a flexible hose and couplings for connection to the railroad tank cars or tank trucks.

A pneumatically operated valve and a combustible gas detection system are provided at the methanol storage tank. The pneumatically operated valve at the methanol storage tank is provided with OPEN-CLOSE push buttons on the Chemical Handling Equipment Platform Control Cabinet (CHEP-CC). For a complete description of the combustible gas detection system, see the subsection headed "Combustible Gas Detection System."

(2) NORMAL OPERATION

Only one of the methanol transfer pumps is required to unload methanol. The other pump is provided as a standby unit.

Each methanol transfer pump is provided with an ON-OFF switch with a locking device for the OFF position, a TEST push bottom at the unit and ON-OFF push buttons on the CHEP-CC.

Under normal operation, when the ON-OFF switch at the selected unit is in the ON position and the ON push button on the CHEP-CC is depressed, the pump will operate continuously until the railroad tank car on the tank truck is empty.

NOTES

The methanol transfer pumps are arranged to automatically shut down when the methanol storage tank overflow alarm occurs.

Combustible gas alarm relays are provided to shut down the methanol transfer pumps, as described in the subsection headed "Combustible Gas Monitoring System."

(3) START-UP AND SHUTDOWN PROCEDURES

To start up and shut down the methanol unloading equipment, use the following procedures:

a. START-UP

- Verify that the plant air system is operating and open the valves required to supply air to the pneumatically operated valve at the methanol storage tank.
- Connect the flexible hose to the fittings provided at the unloading station and to the tank car or tank truck
- Depress the OPEN push button on the Chemical Handling Equipment Platform Control Cabinet (CHEP-CC) for the pneumatically operated methanol storage tank valve and open the manually operated unloading station valve.
- Open the manually operated pump suction and discharge valves from the unloading stations to the methanol storage tank (see Figure III-FL-CHF-1).
- Place the ON-OFF switches at the pumps in the ON positions.
- Close the circuit breakers for the pumps on Motor Control Center MCC-59B.
- Depress the ON push button on the CHEP-CC for the selected methanol transfer pump.

NOTE

If the storage tank overflow alarm occurs, place the ON-OFF switch at the methanol transfer pump in the OFF position and engage the locking device, close the associated manually operated suction and discharge valves, and open the circuit breaker for the pump on MCC-59B.

(4) ALTERNATE OPERATION

a. TRANSFER CONTENTS OF THE METHANOL STORAGE TANK TO RAILROAD CAR OR TANK TRUCK

The contents of the methanol storage tank may be transferred to a railroad car or a tank truck using the methanol transfer pumps.

Under this mode of operation, the pump suction and discharge valves are arranged to pump the methanol from the storage tank or the sump in the storage tank area to a railroad tank car or truck. The methanol transfer pumps will operate continuously until the storage tank is empty.

CAUTION

Level indication is not provided for the tank cars or trucks on the CHEP-CC. Care must be taken to avoid overflowing of a tank car or truck.

NOTE

If methanol has leaked from the storage tank into the sump in the storage tank area, combustible gas alarm relays are provided which prevent operation of the methanol transfer pumps. In the event of a spill, an electrician will be required to "jump" the alarm contacts to permit use of the pumps.

(5) MONITORS AND ALARMS

Valve position indicating lights are provided on the Chemical Handling Equipment Platform Control Cabinet (CHEP-CC) and on the Filter Building Panel - Chemical Handling Section (FBP-CHS).

Each methanol transfer pump is provided with suction and discharge pressure gauges.

Each methanol transfer pump is also provided with status indicating lights on the CHEP-CC and on the FBP-CHS and a no flow (car empty) status indicating light on the CHEP-CC.

An elapsed time meter and a running indicating light are provided for each pump on Motor Control Center MCC-59B.

D. METHANOL FEED PUMPS: CH-MFP-1, 2, 3 AND 4

(1) DESCRIPTION

Methanol feed pumps are provided to automatically pump the desired dosage rate of methanol to the Nitrified Effluent Conduit, to the Diffused Air Reactors, to the two filter influents at Filter Building No. 2, or to Junction Chamber No. 6.

Four methanol feed pumps, designated CH-MFP-1, 2, 3 and 4, are provided with piping and fittings, pulsation dampeners, drives, manually operated valves, meters, back pressure valves, chemical diffusers,

and associated controls on the Methanol Pumping Equipment Control Panel (MPECP) and the Filter Control Console in the Filter Building No. 1.

Each pump is a positive displacement, variable capacity, hydraulically actuated, dual diaphragm type pump. Each unit comprises of a simplex pumping head driven by an electrical motor, wherein a measuring piston reciprocates within a cylinder and causes hydraulic oil to deflect the primary disc diaphragm. The primary disc diaphragm in turn deflects a secondary process diaphragm through an intermediate fluid completely isolated from the primary hydraulic oil.

Each pump has a capacity of 572 gph at 100 psig discharge pressure and at 85 strokes per minute, provided with a 2 HP motor and infinite capacity adjustment from 0-100 percent.

(2) NORMAL OPERATION

The methanol feed pumps are controlled locally at the MPECP in the Chemical Handling Facilities, remotely at the Filter Control Console in the Filter Building No. 1, or remotely at the Blower Building Control Panel in the Blower Building.

Controls on the MPECP consist of ON-OFF indicating lights for each pump, REMOTE-OFF-LOCAL selector switch for each pump, wastewater flow meter selector switches for each meter MS-4, FE-48 and FE-49, flow control dial for each pump (percent stroke), MANUAL-AUTO flow pacing selector switch, ON-OFF stroke actuator selector switch, METER-DAR selector switch, and digital display for each methanol flow meter (FIT-41, FIT-42, and FIT-43).

Under normal operation, one methanol pump, CH-MTP-1 or 2 (one as a standby), is provided to feed methanol to the Nitrified Effluent Conduit when the plant is operated in the parallel mode, or to the Diffused Air Reactors when the plant is operated in the series mode. Plug valves are located at the Chemical Handling Facility which allow the flow from the methanol feed pumps to be discharged to the Nitrified Effluent Conduit or to the Diffused Air Reactors (see Figure III-FL-CHF-1). When the plant is operated in the parallel mode, the methanol pumps CH-MTP-1 or 2 are paced based on the flow signal from Meter MS-4 and the nitrate concentration signal in the influent to the filters to provide methanol to the Nitrified Effluent Filters 1-12.

When the plant is operated in the series mode, the methanol pumps CH-MTP-1 or 2 are paced from the Diffused Air Reactors Facility (see Section III-DA-DAR). The manually operated plug valve MH-504 must be closed and valve MH-503 must be open during the series mode of operation for isolating the undiluted methanol feed line from the Chemical Handling Facility. Selector switches are available at the MPECP to select pump CH-MFP-1 or 2 as the duty pump and to allow control from the Filter Building No.1 controls or from the Blower Building Control Panel.

Under normal operation, pumps CH-MFP-3 and 4 are provided to feed methanol to the two filter influents at Filter Building No. 2 or, alternatively, to Junction Chamber No. 6. Depending on the methanol feeding rate required, one or two pumps can be in operation. If only one of these pumps are used and both filter

influents at the Filter Building No. 2 are open, the methanol feed must be directed to Junction Chamber No. 6 by opening and closing the corresponding valves MH-505, MH-2132, MH-2134 and MH-2133 (see Figure III-FL-CHF-1). The methanol pump CH-MFP-3 is paced based on the flow signal from Meter FE-48 and the nitrate-nitrite concentration signal in the filter influents. Similarly, the methanol pump CH-MFP-4 is paced based on the flow signal from FE-49 and the nitrate-nitrite concentration signal in the filter influents.

Under normal operation, when the controls on the MPECP are positioned as described hereinafter under "Start-Up and Shutdown Procedures," the associated methanol pump will operate continuously feeding methanol at a selected feed rate.

When the methanol feed pumps are paced based on flow times the filters influent nitrate-nitrite concentration signal, the methanol feed rate will be calculated as the following sample procedure:

FLOW X NITRATE-NITRITE CONCENTRATION

- Maximum flow signal corresponds to a flow rate of 240mgd
- Maximum nitrate-nitrite concentration signal corresponds to a concentration of 30 mg/l.
- Maximum methanol feed pumping rate equals 1,144 gph (two pumps, CH-MFP-3 and 4)
- Maximum M/N ratio is computed as follows:

$$M/N = \frac{P_c}{30\ mg/l\ x\ 240\ mgd\ x\ \frac{1}{24\ hours}\ x\ \frac{1}{SpGr\ (methanol)}}$$

where:

P_c= Maximum methanol feed pumping capacity = 1,144 gph (two pumps)

SpGr (methanol) = 0.792

Therefore:

$$M/N_{(maximum)} = \frac{1{,}144\ gph}{30\ mg/l\ x\ 240\ mgd\ x\ \frac{1}{24\ hours}\ x\ \frac{1}{0.792}}$$

$$= \frac{1{,}144}{379} = 3.02\ \frac{mg/l\ methanol}{mg/l\ nitrate}$$

To feed methanol at a selected M/N ratio, say 2.0 mg/1 methanol per mg/l of nitrate, the ratio station for each pump on the MPECP must be adjusted as follows:

$$P_r = M/N \ x \ 30 \ mg/l \ x \ 240 \ mgd \ x \ \frac{1}{24 \ hours} \ x \ \frac{1}{0.792}$$

where:

P_r = Required methanol feed pump rate

M/N = 2.0

then:

$$P_r = 2.0 \ x \ 30 \ mg/l \ x \ 240 \ mg/l \ x \ \frac{1}{24} \ x \ \frac{1}{0.792} = 757.6 \ gph$$

The required ratio station set point (R_{sp}) on the MPECP is:

$R_{sp} = P_r / P_c$ x 100 = 757.6 / 1,144 x 100 = 66 percent (for each pump)

Figure III-FL-CHF-2 shows a family of curves which were developed based on the above M/N ratio and ratio station set point. The curves indicate the methanol feed rate in gallons per hour which is automatically controlled over a flow range of 0 to 240 mgd and a nitrate concentration of 10 to 40 mg/l. Similar curves may be developed for other M/N ratios using the above equations.

When the methanol feed pump is paced by the flow from Meters MS-4, FE-48 and FE-49 only, the methanol feed rate will be calculated as the following sample procedure:

a. FLOW

- Maximum flow signal corresponds to a flow rate of 240 mgd
- Maximum methanol feed pumping rate (P_c) equals 1,144 gph
- Determine the methanol feed pump ratio station set point (R_{sp}) as follows:
  - Select a M/N ratio, say 2.5 mg/l methanol per mg/l nitrate.
  - Obtain the nitrate concentration of the influent to the Denitrification Filters (laboratory analysis or nitrate-nitrite analyzer) and for the purpose of this example assume that the nitrate concentration is 30 mg/l.

The required pumping rate (P_r) is as follows:

$$P_r = M/N \ x \ N_c \ x \ 240 \ mg/l \ x \ \frac{1 \ day}{24 \ hours} \ x \ \frac{1}{SpGr \ (methanol)}$$

where:

P_r - Required methanol feed pump rate

M/N = 2.5

N_c = Nitrate concentration (30 mg/l in this example)

then:

$$P_r = 2.5 \ x \ 30 \ x \ 240 \ mg/l \ x \ \frac{1 \ day}{24 \ hours} \ x \ \frac{1}{0.792} = 947 \ gph$$

and $R_{sp} = P_r / P_c \times 100$

= 947 / 1,144 x 100 = 83 percent

Figure III-FL-CHF-2 shows a curve which indicates the required ratio station set point for nitrate concentrations of 0 to 40 mg/l for a M/N ratio of 3.0. Similar curves may be developed for other M/N ratios using the above equations.

(3) START-UP AND SHUTDOWN PROCEDURES

To start up and shut down the methanol feedpumping equipment under normal operation, use the following procedures.

a. START-UP

- Verify that plant air system is operating and open the air supply line valves required to supply air to the pneumatically operated valves.
- Open the associated manually operated suction and discharge valves to the selected methanol feed pump
- Place each wastewater flow meter selector switch to the associated methanol feed pump position as follows:

Wastewater Flow Meter	Methanol Feed Pump	Alternate
MS-4	CHF-MFP-1	CHF-MFP-2

Wastewater Flow Meter	Methanol Feed Pump	Alternate
FE-48	CHF-MFP-3	CHF-MFP-4 or 2
FE-49	CHF-MFP-4	CHF-MFP-3 or 2

NOTE

Refer to Figure III-FL-CHF-1, Chemical Handling Facilities, to determine valve sequence when using alternate feed pumps.

- If the plant is operated in the series mode, place the METER-DAR selector switch to the DAR position
- If the plant is operated in the parallel mode, place the METER-DAR selector switch to the METER position
- Place the MANUAL-AUTO flow pacing selector switch for each pump in the AUTO position
- Place the ON-OFF stroke adjustment switch at the selected pump in the ON position
- Close the circuit breaker for the methanol feed pump on Motor Control Center MCC-59B
- Depress the OPEN push buttons on the Chemical Handling Equipment Platform Control cabinet (CHEP-CC) for the pneumatically operated valve required to permit flow from the storage tank to the methanol feed pump
- Place the associated REMOTE-OFF-LOCAL selector switch on the MPECP in the REMOTE position

b. SHUTDOWN

- Place the associated REMOTE-OFF-LOCAL selector switch on the MPECP in the OFF position

NOTE

If maintenance is to be performed on a methanol feed metering pump, place the REMOTE-OFF-LOCAL selector switch on the MPECP in the OFF position, close the associated manually operated suction and discharge valves, and open the associated

circuit breaker on MCC-59B. Follow approved **Lockout/Tagout** procedures (See Chapter VI, Safety).

(4) ALTERNATE OPERATION

Each methanol feed pump may be locally operated. Follow the start-up procedures described under normal operation, except place the associated REMOTE-OFF-LOCAL selector switch on the MPECP in the LOCAL position. During local operation the active methanol feed pump(s) and flow meter(s) are selected at the MPECP, while percent stroke is controlled according to the alternate operations summarized below:

Alternate	Stroke Actuator Selector Switch (ON-OFF)	Flow Pacing Selector Switch (AUTO-MANUAL)
1	ON	AUTO
2	ON	MANUAL
3	OFF	N/A

In Alternate 1, percent stroke is remotely controlled at the Filter Control Console in Filter Building No. 1 or at the Blower Building Control Panel in the Diffused Air Reactors Facility. In Alternate 2, percent stroke is controlled by adjusting the associated Percent Stroke Potentiometer at the MPECP. In Alternate 3, each pump's head capacity is manually adjusted from inside the controller located at the pump head.

(5) MONITORS

Each chemical feed metering pump is provided with status indicating lights on the Chemical Handling Equipment Platform Control Cabinet and one the Filter Building Panel - Chemical Handling Section.

An elapsed time meter and a running indicator light are provided for each pump on Motor Control Center MCC-59B.

E. SUMP PUMP: CH-SP-1

The sump pump equipment for the chemical for the chemical handling facilities consists of one sump pump and associated drive motor, designated CH-SP-1, and associated control panel, cover plate and frame, and sump level control.

The sump pump is located on the walkway between the methanol storage tank and the brewery waste storage tank. The sump pump discharges into the effluent channel of the Final Sedimentation Tanks.

Combustible gas alarm relays are provided to shut down the sump pump, as described in the subsection headed "Combustible Gas Monitoring System."

For a complete description of the sump pumping equipment, operation and control refer to the section headed "Sump Pumping Equipment."

F. PLANT AIR (SEE FIGURES III-SU-UPS-1 THROUGH 3)

The plant air equipment in the chemical handling facilities consists of piping and fittings, shutoff valves, hose connections, moisture traps and various solenoid valves.

Compressed air is supplied to the plant air equipment by the plant air system as described in the section headed "Main Pumping Station."

The plant air equipment supplies compressed air to pneumatically operated valves and to hose connections.

G. EFFLUENT WATER (SEE FIGURES III-SU-UPS-5 THROUGH 9)

The effluent water equipment in the chemical handling facilities consists of piping and fittings and hose hydrants.

Effluent water is supplied to the chemical handling facilities by the general purpose effluent water pumps as described in the section headed "Filter Building and Nitrified Effluent Conduit."

The effluent water is used for hosing down tanks and equipment, for purge water for the level transmitter on each of the storage tanks, and for pump seal and lubrication water for the level transmitter on each of the storage tanks, and for pump seal and lubrication water for the Sump Pump (CH-SP-1).

H. COMBUSTIBLE GAS DETECTION SYSTEM: OG-51, 52, 53, 54 AND 55

(1) DESCRIPTION

The methanol storage area and the methanol transfer pumps area are provided with a combustible gas detection system which is arranged to transmit continuous indication of combustible gas levels related to the lower explosion limit (LEL) of such gases.

The combustible gas detection system consists of five Combustible Gas Sensors, designated as OG-51, 52, 53, 54 and 55, indicators and controls, and an alarm horn and alarm light.
The combustible gas sensors are located as follows:

GAS SENSOR	LOCATION
OG-51	Chemical Handling Equipment Platform (west section)
OG-52	Southwest corner of Methanol Storage Area (west wall)
OG-53	Southeast corner of Methanol Storage Area (sump)
OG-54	Portable sensor on 50-foot extension cable with cabinet located on the pipe railing adjacent to the manhole on the top of methanol storage tank
OG-55	Northeast corner of methanol storage area (north wall)

Each combustile gas sensor is provided with a control and indicating unit mounted in the Chemical Handling Equipment Platform Control Cabinet (CHEP-CC). Each control and indicating unit is provided with the following items:

- A white pilot light for power indication
- An ON-OFF switch
- A red pilot light for alarm indication
- A blue pilot light for trouble indication
- A momentary contact switch for alarm reset and horn silence
- A meter indicator with 0 to 100 percent LEL combustible gas range, all face mounted

The alarm horn and alarm light are mounted between Column 1A and 2A of the Chemical Handling Equipment Platform.

(2) NORMAL OPERATION

Each combustible gas sensor continuously monitors the atmosphere in the area of the methanol storage tank and the methanol feed and transfer pumps for the presence of combustible gases. When a combustible gas sensor detects a combustible gas level equal to 25 percent LEL, the external alarm horn will sound and the alarm light will flash. If the combustible gas level increases to 50 percent LEL, the following equipment will automatically shut down: Methanol Transfer Pumps, Methanol Feed Pumps and Sump Pump at the methanol storage tank.

Each combustible gas sensor is provided with audible and visual alarms for 25 and 50 percent LEL alarms on the annunciator panel on the Filter Building Panel - Miscellaneous Section.

Scanner Transmitter No. 58 in the Filter Building Control Room continuously scans and transmits the conditions of all alarm points to the SCADA System.

I. POWER DISTRIBUTION SYSTEM

The power distribution system is shown in detail on the contract plans and various shop drawings. Refer to Table III-FL-CHF-1, Chemical Handling Facilities - Facility Equipment Summary for contract plan and shop drawing number which pertain to the power distribution system.

III-FL-ACT POST AERATION-CHLORINATION TANKS AND JUNCTION CHAMBER NO. 4 (016 and 17)

A. GENERAL

The Post Aeration-Chlorination Tanks and Junction Chamber No. 4 contain the following equipment and systems:

- Flow Meter
- Channel Static Mixer
- Post Aeration-Chlorination Tanks
- Sluice Gates
- Air Diffuser System
- Chlorine Diffuser System
- Sample Pumps
- Dewatering Pump
- Reclaimed Water Pumping Station
- Plant Air
- Effluent Water
- Dissolved Oxygen Metering System
- pH Metering System
- Power Distribution System

Filter effluent flows to the Post Aeration-Chlorination Tanks No. 1-3 by gravity through an 8-foot by 19-foot Final Effluent Channel from the Denitrification Filters. Preliminary treated wastewater or secondary treated wastewater may be diverted to the Post Aeration-Chlorination Tanks by gravity through the 8-foot by 5-foot secondary treatment control conduit. Effluent from the Post Aeration-Chlorination Tanks flows by gravity through a 96-inch diameter underground conduit to Junction Chamber No. 4 (refer to Figure II-2B, Plant Flow Diagram - East Side)

Refer to Table III-FL-ACT-1, Post Aeration-Chlorination Tanks and Junction Chamber No. 4 - Facility Equipment Summary, for control numbers, manufacturers, equipment capacities, and operation, maintenance, contract plan and shop drawing references. Refer to the Division 4H6, 5H3B and 5H4 Contractor's O & M Manual for Manufacturer's Service Manuals pertaining to equipment provided in this facility.

B. PROCESS CONTROL - POST AERATION-CHLORINATION-DECHLORINATION

(1) DESCRIPTION

Post aeration, chlorination and dechlorination is provided to aerate and disinfect the plant effluent and to remove chlorine residuals prior to discharge.

Coarse bubble diffusers are located in the upstream end of each tank to raise the Dissolved Oxygen (DO) concentrations in the plant effluent to a minimum 4.0 mg/l, or an average of 5.0 mg/l, to meet effluent permit requirements.

Chlorine solution is added ahead of the tanks to maintain the plant effluent free chlorine residual at not less than 1.0 mg/l. The tanks are designed to provide a minimum contact period of 15 minutes for disinfection at peak flow. The effluent from the tanks is dechlorinated with sulfur dioxide to a residuals chlorine concentration of zero to prevent the formation of potentially carcinogenic compounds, such as organochlorine and trihalomethanes.

This section includes information pertaining to the post aeration and chlorination facilities and equipment. Refer to Sections III-FL-FB, Filter Building No. 1 and 2 and Junction Chamber No. 6, and III-FL-DCL, Dechlorination Facilities, for a detailed description of the chlorination and dechlorination preparation systems, respectively. Refer to Chapter II, Process Description, for process information.

(2) MEASUREMENTS AND ANALYSES

a. DISSOLVED OXYGEN

Dissolved Oxygen (DO) Probes are provided to continuously monitor the Post Aeration-Chlorination Tanks effluent DO concentrations.

b. CHLORINE RESIDUAL

Chlorine Residual Analyzers are provided to continuously monitor the chlorine residual in effluent samples after initial application and mixing and before the water flows out of the Post Aeration-Chlorination Tanks. The chlorine residuals are indicated and recorded and are used to pace chlorine feed equipment (refer to Section III-FL-FB, headed Filter Building No. 1 and No. 2 and Junction Chamber No. 6).

c. pH

The pH is measured to ensure that it is within the range required by the effluent permit.

(3) PROCESS CONTROL

a. DISSOLVED OXYGEN

Flowmeters are provided on the process air supply piping to the Post Aeration-Chlorination Tanks. The air flow rate may be increased or decreased as required to maintain the minimum required 4.0 mg/l DO in the plant effluent.

b. CHLORINE DOSAGE

Chlorine feed equipment is provided which automatically adjusts the chlorine feed rate to maintain a free chlorine residual of not less than 1.0 mg/l at the tanks effluent weir. Refer to Section III-FL-FB, Filter Building No. 1 and No. 2 and Junction Chamber No. 6, for a detailed description of the chlorine feed equipment.

C. FILTERED EFFLUENT CHANNEL FLOW METER

The flow metering system, located in the Filtered Effluent Channel, continuously measures the influent flow to the Post Aeration-Chlorination Tanks to regulate and adjust the chlorine injection rate (see Figure III-FL-ACT-1). The flow metering system consists of an open channel velocity-depth meter. A flow indicating transmitter

located at the unit sends a 4-20 mA signal to a flow indicator at the Final Effluent Control Panel (FECP) located in Filter Building No. 1. The influent flow to the tanks is displayed and recorded in FECP and is also relayed to the SCADA System.

D. CHANNEL STATIC MIXER

The channel static mixer equipment is located in the Filtered Effluent Channel ahead of the Post Aeration - Chlorination Tanks (see Figure III-FL-ACT-1). The in-line static mixer is provided with an integral chlorine diffuser which automatically injects chlorine solution into the flow stream of the channel. The static mixer has no moving parts to provide complete and gentle mixing of the solution in the channel, minimizing head loss.

E. POST AERATION-CHLORINATION TANKS

(1) DESCRIPTION

Each Post Aeration-Chlorination Tank is 425 feet long by 25 feet wide and has an average water depth of 10 feet. Tanks Nos. 1 and 2 are located adjacent to each other and are of common wall construction. Tank No. 3 is a mirror image of Tank No. 1 and is located adjacent to Tank No. 1. Flow through the tanks is arranged in a serpentine pattern (see Figure III-FL-ACT-1).

Flow enters each tank through two inlet sluice gates. Flow from the Post Aeration-Chlorination Tanks overflows weirs at the south end of the tanks. Stop log grooves are provided in various locations to permit isolation of the influent sluice gates.

Chlorine diffusers are provided in the Filtered Effluent Channel and in the first pass of Tanks No. 1 and 2. Air diffusers are provided in the first pass of each tank. Sample pumps are provided to pump samples to automatic samplers and analyzers in Filter Building No. 1 (see Figure III-FL-ACT-3). A dissolved oxygen analyzer is provided to measure the dissolved oxygen content in the Post Aeration-Chlorination Final Effluent Channel.

A portion of the pre-sulfonated effluent from the tanks is used as the general purpose effluent water.

(2) NORMAL OPERATION

Under normal operation, one or more tanks are in service. Table III-FL-ACT-2 includes excerpts from the basis of design (which is presented in its entirety in Chapter II) pertaining to the Post Aeration-Chlorination Tanks Nos. 1-3 in their normal mode of operation. The curves shown on Figure III-FL-ACT-2 indicate chlorination detention times for plant flow rates of 0 to 270 mgd and show the number of tanks which must be in service to maintain the minimum detention time.

TABLE III-FL-ACT-2 POST AERATION-CHLORINATION TANKS
BASIS FOR DESIGN

PARAMETER		NORMAL OPERATION
GENERAL		
Influent Quantities - MGD		
Average Flow		96.0
Peak Flow		220.8
Number of Tanks		3
Size of each Tank (ft)		425' × 25'
Average Water Depth (ft)		10'-0"
Volume per Tank (cu ft)		106,250
	(mg)	0.795
Total Volume	(cu ft)	318,750
	(mg)	2.385
CHLORINATION ZONE		
Length of the Chlorination Zone (ft)		425'-0"
Chlorine Contact Time - Min (Based on Total Volume with all tanks in service)		
Average Flow		36
Peak Flow		16

Under normal operation, chlorine solution is added at the static mixer upstream of the tanks. Chlorinated filtered effluent is then distributed to the tanks in service. Alternatively, clorine solution can be added through the chlorine diffuser systems at Tanks No. 1 and 2. There are no chlorine diffusers at Tank No. 3.

The Post Aeration-Chlorination Tanks are also the source of general purpose effluent water (GPEW) for the plant and reclaimed water pumps send water off-site. GPEW is in constant use at the plant. For this reason, chlorinated water must always be available at the Effluent Water Chamber (see Figure III-FL-ACT-1). When tanks No. 1 or 2 are in service, Sluice Gates CA-SG-7 or -8, respectively, must be open. If Tank No. 3 is in operation, valves (XX) and (XX) must be open to allow chlorinated water from Tank No. 3 into the Effluent Water Chamber.

For the Reclaimed Water Pumping Station, Sluice Gates (XX) or (XX) must be open when Tanks No. 1 or 2 are in service. Valves (XX) and (XX) must be open when Tank No. 3 is in service.

(3) START-UP, SHUTDOWN AND DEWATERING PROCEDURES

To start up, shut down or dewater the Post Aeration-Chlorination Tanks, use the following procedures:

a. START-UP

- Open all associated influent sluice gates
- Startup the air diffuser system, chlorine diffuser system and sample pump as described elsewhere in this section

- Open sluice gates or valves to allow water to enter the Effluent Water Chamber and the Reclaimed Water Pumping Station.

b. SHUTDOWN

- Close the associated influent sluice gates to the tank to be shut down
- Shut down the associated chlorine diffuser system, if applicable
- Shut down the associated air diffuser system and sample pump suction

c. DEWATERING

- Shut down the tank to be dewatered as described above
- Open the associated dewatering Sluice Gate (CA-SG-5, CA-SG-6 or CA-SG-11)
- As the liquid level in the tank drops, wash down the tank walls using the effluent water connections provided

NOTE

The tanks drain by gravity into the Dewatering Sump located adjacent to Post Aeration-Chlorination Tank No. 3. Verify that dewatering pump located in the sump has been started as described elsewhere in this section.

After the tank has been completely dewatered, close the dewatering sluice gate

F. SLUICE GATES: CA-SG-1, 2, 3, 4, 5, 6, 7, 8, 9, 10, 11 AND 12

(1) DESCRIPTION

Sluice gates are provided to control flow into the Post Aeration-Chlorination Tanks (see Figure III-FL-ACT-1). Table III-FL-ACT-3 indicates the contract plan designation number, size, type operator and function of the sluice gates.

Stop log grooves are provided to permit isolation of each sluice gate for maintenance and to permit isolation of the Post Aeration-Chlorination Tanks from the secondary treatment control conduit and from Junction Chamber No. 4.

TABLE III-FL-ACT-3 - FUNCTION OF SLUICE GATES

CONTRACT PLANT DESIGNATION	SIZE (INCHES)	OPERATOR TYPE	FUNCTION
CA-SG-1 and 2	60 x 72	Electric Motor	Permit flow to Post Aeration-Chlorination Tank No. 1 (in open position)
CA-SG-3 and 4	60 x 72	Electric Motor	Permit flow to Post Aeration-Chlorination Tank No. 2 (in open position)

CONTRACT PLANT DESIGNATION	SIZE (INCHES)	OPERATOR TYPE	FUNCTION
CA-SG-5 and 6	12 x 12	Handwheel	Permit Post Aeration-Chlorination Tank Nos. 1 and 2, respectively, to dewater to the Dewatering Sump (in open position)
CA-SG-7	24 x 24	Handwheel	Permits chlorinated effluent flow from Post Aeration-Chlorination Tank No. 1 to Filter Building No. 1 (in open position)
CA-SG-8	24 x 24	Handwheel	Permits chlorinated effluent flow from Post Aeration-Chlorination Tank No. 2 to Filter Building No. 1 (in open position)
CA-SG-9 and I0	60 x 72	Electric Motor	Permit flow to Post Aeration-Chlorination Tank No. 3 (in open position)
CA-SG-11	12 x 12	Handwheel	Permits Post Aeration-Chlorination Tank No. 3 flow to the Dewatering Sump (in open position)
CA-SG-12	16 x 16	Handwheel	Permits the Chlorinated Effluent Channel to dewater to Post Aeration-Chlorination Tank No. 3.

(2) NORMAL OPERATION

a. SLUICE GATES CA-SG-1, 2, 3 AND 4

Sluice Gates CA-SG-1 and 2 and CA-SG-3 and 4 are located in Post Aeration-Chlorination Tanks Nos. 1 and 2, respectively, and control flow from the Final Effluent Channel into each tank. The sluice gates are intended to be completely open or closed. he sluice gates are motor operated and are provided with OPEN-CLOSE-STOP push buttons at each unit. Each STOP push button is provided with a locking device.

b. SLUICE GATES CA-SG-5 AND 6

Sluice Gates CA-SG-5 and 6 are located in Post Aeration-Chlorination Tanks Nos. 1 and 2, respectively, and control flow from each tank to the Dewatering Sump. Each sluice gate is manually operated by means of a handwheel. Turning the handwheel in the counterclockwise direction opens the gates.

c. SLUICE GATES CA-SG-7 AND 8

Sluice Gates CA-SG-7 and 8 are located in Post Aeration-Chlorination Tanks Nos. 1 and 2, respectively, and control the flow of chlorinated effluent from each tank to the Filter Building No. 1. Each sluice gate is manually operated by means of a handwheel. Turning the handwheel in the counterclockwise direction opens the gate.

d. SLUICE GATES CA-SG-9 AND 10

Sluice Gates CA-SG-9 and 10 are located in the Post Aeration Chlorination Tank No. 3 and control the flow from the Final Effluent Channel into the tank. The Sluice Gates are intended to be completely open or closed. The Sluice Gates are motor operated and are provided with OPEN-CLOSE-STOP push buttons at each unit. Each STOP push button is provided with a locking device.

e. SLUICE GATES CA-SG-11

Sluice Gate CA-SG-11 is located in Post Aeration-Chlorination Tank No. 3 and controls flow from the tank to the Dewatering Sump. The Sluice Gate is manually operated by means of a handwheel. Turning the handwheel in the counterclockwise direction opens the gate.

f. SLUICE GATES CA-SG-12

Sluice Gate CA-SG-12 is located along the south wall of Post Aeration-Chlorination Tank No. 3 and allows for the dewatering of the Chlorinated Effluent Channel into the tank. The Sluice Gate is manually operated by means of a handwheel. Turning the handwheel in the counterclockwise direction opens the gate.

(3) START-UP AND SHUTDOWN PROCEDURES

The following start up and shutdown procedures apply only to the sluice gates with motor operators:

a. START-UP

- Close the circuit breaker on Motor Control Center MCC-59 in the Filter Building No. 1
- Push the OPEN or CLOSE button at the unit

NOTE

Limit switches are provided to de-energize the motor operator when the gate arrives at the completely OPEN or CLOSED position.

b. SHUTDOWN

- Push the STOP button at the unit

NOTE

If maintenance is to be performed on the unit, open the circuit breaker on MCC-59 and engage the locking device on the STOP push button. Follow approved **Lockout/Tagout** procedures (See Chapter VI, Safety).

(4) ALTERNATE OPERATION

Each motor operator is provided with a handwheel for manual operation as follows:

- Depress the motor operation declutching lever
- Turn the handwheel counterclockwise to open and clockwise to close the gate

NOTE

Energizing the motor operator automatically disengages the declutching lever and returns the gate to motor operation.

(5) MONITORS

Torque switches are provided to de-energize the motor operator if the gate movement becomes obstructed. Refer to the Division 4H6 and 5H4 Contractor's O & M Manual for manufacturer's literature that describes the setting and operation of the torque switches.

G. AIR DIFFUSER SYSTEM

The air diffuser system in the Post Aeration-Chlorination Tanks consists of three flow meters, designated MPA-17, 18 and 19 and coarse air diffuser assemblies with associated butterfly valves (see Figure III-FL-ACT-1).

Coarse bubblers diffusers are provided at the head of each Post Aeration-Chlorination Tank to raise the dissolved oxygen levels in the plant effluent to a minimum of 4.0 mg/l. The air diffuser system also promotes further mixing of the chlorine solution in the tanks. Significant oxygen is also added simply by the drop over the tank effluent weirs under most circumstances.

For a complete discussion of the air diffuser system equipment, operation and control, refer to Section III-PA, headed Process Air Equipment and Systems.

H. ALTERNATIVE CHLORINE DIFFUSER SYSTEM

The chlorine diffuser system in the Post Aeration-Chlorination Tanks consists of chlorine diffuser assemblies and associated plug valves at Tanks No. 1 and 2. This system is provided to feed chlorine solution to the flow stream ahead of the tanks for disinfection of the final effluent. Typically, these alternative chlorine diffusers will not be in operation, as all of the clorine solution will be introduced at the static mixer upstream.

I. SAMPLE PUMPS: CA-SSP- 2, 3 and 4, and JC4-SSP-1

(1) DESCRIPTION

Three sample pumps are provided on the Post Aeration-Chlorination Tanks and Junction Chamber No. 4 to pump samples to the sampling station located in Filter Building No. 1 and to Chlorine Analyzers No. 1, 2 and 3, located in the Chlorine Analyzer Room (See Figure III-FL-ACT-3). Chlorine Analyzer No. 3 operates continuously, however, only one of either Chlorine Analyzer No. 1 or 2 operates at a time.

If Tank No. 3 is out of service, the stand-by sample pumps CA-SSP-1 and CA-SSP-2 can be used. However, the stand-by SO_2 diffusers located in the effluent channel of Tanks No.1 and 2 should be in operation if the stand-by sample pump CA-SSP-1 is used, and the stand-by chlorine diffusers located in the influent of Tanks No. 1 and 2 should be in operation if the stand-by sample pump CA-SSP-2 is used.

Chlorinated Sample Pump, CA-SSP-3, pumps a sample from the tanks influent channel, after chlorination, to Chlorine Analyzer No.1 or 2. The Stand-by Chlorinated Sample Pump, CA-SSP-2, pumps samples from Tanks No. 1 and 2 after chlorination and post aeration to Chlorine Analyzer No.1 or 2.

Pre-Sulfonated Sample Pump, CA-SSP-4, pumps a sample from the Chlorinated Effluent Channel to Chlorine Analyzer No.3 and to the sample station in Filter Building No.1. The Stand-by Sample Pump, CA-SSP-1, pumps samples from Tanks No. 1 and 2 after dechlorination to Chlorine Analyzer No.3 and to the sample station in Filter Building No.1.

Final Effluent Pump, JC4-SSP-1, pumps dechlorinated effluent samples to a sampling barrel located in the Chlorine Analyzer Room. Probes are installed in the barrel for continuous monitoring of Dissolved Oxygen and pH in the plant effluent. All sample pumps may discharge in the Chlorine Analyzer Room sink. Grab samples may be taken from the sink for additional testing.
The Chlorinated Sample Pumps CA-SSP-1 , 2 and 3 are self-priming, close-coupled centrifugal pumps driven by constant speed motors. Sample Pump CA-SSP-1 has a rated capacity of 30 gpm at a rated head of 50 feet. Sample Pump CA-SSP-2 has a rated capacity of 10 gpm at a rated head of 43 feet. Sample Pump CA-SSP-3 has a rated capacity of 25 gpm at a rated head of 29 feet.

The Pre-sulfonated Sample Pump, CA-SSP-4, is of the submersible type driven by a constant speed motor. This pump has a rated capacity of 30 gpm at a rated head of 28 ft.

The Final Effluent Sample Pump, JC4-SSP-1, is a self-priming, close-coupled centrifugal pump driven by a constant speed motors. This pump has a rated capacity of 15 gpm at a rated head of 31 feet.

(2) NORMAL OPERATION

Under normal operation, when the Post Aeration-Chlorination Tanks are in service, sample pumps CA-SSP-3, CA-SSP-4 and JC4-SSP-1 are required to be in operation. Stand-by pumps can be used when the Post Aeration-Chlorination Tank No. 3 is our of service.

Each sample pump is provided with START-STOP push buttons with a locking device for the STOP button at the unit and START-STOP push buttons and running indicating lights on MCC-59.

Chlorinated Sample Pump CA-SSP-1 may be operated from the sample pump control station located on the mezzanine west of the Control Room in Filter Building No. 1. Chlorinated Sample Pump CA-SSP-2 may be operated from the sample pump control station located in the Control Room. Each control station is provided with START and STOP push buttons, red ON and green OFF indicating lights for each pump.

(3) START-UP AND SHUTDOWN PROCEDURES

To start up and shut down the sample pumps use the following procedures:

a. START-UP

- Make sure the associated tanks are in operation
- Depress the START push button at the unit or on MCC-59

b. SHUTDOWN

- Depress the STOP push button at the unit or on MCC-59

NOTE

If maintenance is to be performed on a sample pump, open the associated circuit breaker on MCC-59 and engage the locking device on the STOP push button. Follow approved **Lockout/Tagout** procedures (See Chapter VI, Safety).

(4) MONITORS

Running indicating lights and an elapsed time meter are provided for each sample pump CA-SSP-3 and 4 and JC4-SSP-1 on MCC-59. Running indicating lights are provided for each Sample Pump CA-SSP-1 and 2 in the control stations located in Filter Building No. 1. Refer to the Contractor's O&M Manual for manufacturers literature describing the panel.

J. DEWATERING PUMP: CA-DP-1

(1) DESCRIPTION

The Dewatering Pump, designated CA-DP-1, is provided to completely dewater the Post Aeration-Chlorination Tanks. The Dewatering Pump consists of a pump and associated drive unit with a liquid level sensor to control normal operation. The pump is installed in the dewatering sump, located northeast of Post Aeration-Chlorination Tank No.3.

The Dewatering Pump is a single stage, vertical shaft, non-clogging, bottom suction, side discharge, centrifugal type, solids handling submersible pump. The pump is driven by a vertical constant speed motor. The pump has a rated capacity of 2350 gpm at a rated head of 37 feet.

(2) NORMAL OPERATION

The Dewatering Pump is provided with an ON-OFF switch with a locking device for the OFF position and a red running indicator light located at Motor Control Center MCC-59. Float switches are also provided to automatically control the operation of the pump according to the liquid level in the dewatering sump.

There is only one pump available. If this pump should fail to operate, dewatering could be postponed until the pump is repaired or a portable pump could be used to dewater a tank.

(3) START-UP AND SHUTDOWN PROCEDURE

a. START-UP

- Place the ON-OFF switch in the ON position. Control of the pump will be through the float switches located in the dewatering sump.

b. SHUTDOWN

- Place the ON-OFF switch in the OFF position.

NOTE

If maintenance is to be performed on the dewatering pump place the ON-OFF switch in the OFF position, engage the locking device, and open the circuit breaker on MCC-59. Follow approved **Lockout/Tagout** procedures (See Chapter VI, Safety).

K. RECLAIMED WATER PUMPING STATION

The Reclaimed Water Pumping Station wet well is located within Post-Aeration Chlorination Tank No. 2. The pumping station is designed to pump chlorinated effluent to the off-site Reclamation Facility for cooling purposes. The pumping station consists of three vertical turbine pumps, instrumentation and control. Refer to Section III-FL-RWPS for a detailed description of the Reclaimed Water Pumping Station equipment, operation and control.

L. PLANT AIR (SEE FIGURE III-SU-UPS-I THROUGH 3)

The plant air equipment for the Post Aeration-Chlorination Tanks consists of piping and fittings, a shutoff valve, and a hose connection. Compressed air is supplied to the plant air equipment by the plant air system as described in Section III-OB-MPS, headed Main Pumping Station. The plant air equipment supplies compressed air to a hose connection.

M. EFFLUENT WATER (SEE FIGURE III-SU-UPS-5 THROUGH 9)

The effluent water equipment for the Post Aeration-Chlorination Tanks and Junction Chamber No. 4 consists of piping and fittings, a shutoff valve and hose connections. Effluent water is supplied to the Post Aeration-Chlorination Tanks by the general purpose effluent water pumps as described in Section III-FL-FB, headed Filter Building No. 1 and No. 2 and Junction Chamber No. 6. The effluent water is used for hosing down the tanks and equipment

N. DISSOLVED OXYGEN METERING SYSTEM:

The dissolved oxygen (DO) metering system is provided to measure the DO concentration in the effluent from the Post Aeration-Chlorination Tanks.

The DO metering system consists of a Dissolved Oxygen Analyzer with associated submerged probe. The probed is located in the sampling barrel located in the Chlorine Analyzer Room. The DO metering system measures the DO concentration from 0 to 10 milligrams per liter (mg/l). The DO concentration is indicated at the analyzer and is relayed to Indicator G-120 on the Process Monitoring and Terminal Cabinet Addition in the Main Pumping Station. The DO concentration is also relayed to the SCADA System.

O. PH METERING SYSTEM

The pH metering system is provided to continuously measure pH levels in the plant effluent to meet discharge requirements. The metering system consist of a pH Meter with associated submerged probed located in the Chlorine Analyzer Room.

PH levels are recorded and displayed in the Effluent Monitoring Panel located in the Control Room of Filter Building No. 1. The pH level is also relayed to the SCADA System.

P. POWER DISTRIBUTION SYSTEM

The power distribution system is shown in detail on the contract plans and various shop drawings. Refer to Table III-FL-ACT-1, Post Aeration-Chlorination Tanks and Junction Chamber No. 4 - Facility Equipment Summary for contract plan and shop drawing numbers which pertain to the power distribution system.

III-FL-DCL DECHLORINATION FACILITIES(046)

A. GENERAL

The Dechlorination Facilities consist of the following systems:

- Sulfur dioxide unloading system
- Air padding system
- Sulfur dioxide cylinder storage system
- Evaporators
- Sulfonators
- Ejectors
- Sulfur dioxide solution water pump
- Sulfur dioxide dosage control system
- Mechanical mixers
- Hoisting equipment
- Gas detection equipment
- Ventilation

The sulfur dioxide handling equipment is located in the Dechlorination Building. The sulfur dioxide solution water pump is located in Filter Building No. 1. The dosage control system is located at the south end of the Post-Aeration/Chlorination Tanks. The mechanical mixers are located at Junction Chamber No. 4. The system is shown diagrammatically on Figure III-FL-DCL-1. The equipment at the south end of the Post-Aeration/Chlorination Tanks and at Junction Chamber No. 4 is shown on Figure III-FL-DCL-2.

Refer to Table III-FL-DCL-1, Dechlorination Facilities - Facility Equipment Summary, for control numbers, manufacturers, equipment capacities, and other equipment information. Refer to Contractor's O & M Manual for Manufacturer Service Manuals pertaining to the Dechlorination Facilities.

B. PROCESS CONTROL AND MONITORING

(1) DESCRIPTION

The purpose of the Dechlorination Facilities is to remove all chlorine residual from the final effluent to meet permit requirements. Chlorine is used as a disinfectant and the target chlorine residual is 1.0 mg/l. Sulfur dioxide solution is added to the effluent from the Post-Aeration/Chlorination Tanks to produce the following chemical reaction:

$$SO_2 + H_2O + HOCl \rightarrow 3H^+ + Cl^- + SO_4^{-2}$$

Theoretically, 0.9 mg of sulfur dioxide is required for each 1.0 mg of chlorine residual. In practice, the typical ratio is 1:1.

Sulfur dioxide is provided in liquid form from rail cars or cylinder tanks and evaporated to a gaseous form using evaporators. Sulfonators and ejectors are then used to regulate the gas and mix it with strained, chlorinated effluent to form the sulfur dioxide solution. The solution is then pumped to Junction Chamber

No. 4 where it is mechanically mixed with the plant effluent. Chlorine analyzers are used before and after the dechlorination process to control the sulfur dioxide feed rate.

(2) PROCESS CONTROL

a. GENERAL

At Tampa two methods are available to automate dechlorination.

- Residual Control
- Biased Sample

A micro DCI programmable controller, a high performance microprocessor, is used to control the dechlorination process. The controller receives both total residual chlorine signals and the effluent flow signals. The controller uses the signals to monitor the dechlorination process and automatically adjust the sulfur dioxide feed rate. The controller transmits a 4-20 mA signal to the sulfonator rate control valve. The signal either increases or decreases the sulfur dioxide feed rate. The control method employed is selected by the operator at the controller. As mentioned earlier the operator can select residual control (Compound Loop) or biased sample to control the dechlorination process.

Each Sulfonator has a feed rate control valve capable of receiving a 4-20 mA signal. The valve is identical to a chloramatic valve used on chlorinators. The valve can be operated in manual or remote mode from the unit or in remote mode from the Dechlorination Control Panel. Only one sulfonator can be operated in automatic at any given time. If the sulfur dioxide feed rate exceeds 2000 lbs/day then a second sulfonator has to be placed on line and operated manually. The following describes the dechlorination control system.

b. BIASED SAMPLE CONTROL

The amount of sulfur dioxide gas to be dissolved into water is regulated by the sulfonators, which can be automatically controlled from the Dechlorination Control Panel in Filter Building No. 1. Selection of manual or automatic control is accomplished by setting the appropriately labeled selector switch button on the front of the sulfonator to the desired position. The LOCAL/REMOTE selector switch has indicating lights located on the Dechlorination Control Panel in Filter Building No. 1. In the manual mode, the dosage can be adjusted to the desired rate by the use of the "Rate Setter" control knob. To use the automatic mode, set the LOCAL/REMOTE selector switch button on the front panel of the sulfonator to REMOTE. Control is then transferred to the Dechlorination Control Panel. Under this condition, the automatic rate adjustment valve in the sulfonator is automatically positioned by a 4-20 mA signal derived from a programmable controller located in the Dechlorination Control Panel.

Input to the programmable microprocessor is derived from the Total Residual Chlorine Analyzers located in the Chlorine Analyzer Room.

One analyzer will measure the total chlorine residual in a pre-sulfonated sample. The other analyzer will measure the total chlorine residual in a sample consisting of a mixture of one-half sulfonated (dechlorinated) and one-half pre-sulfonated effluent. The 4-20 mA signals from these analyzers is transmitted to a DLM digital linearizer to produce a 4-20 mA linear signals which are then transmitted to the Programmable Controller in the Dechlorination Control Panel located in Filter Building No. 1. Each of these signals is indicated on the control panel.

The microprocessor then multiplies the residual signal from the mixed sample by a manually adjustable, constant ratio and compares this signal with the output of the pre-sulfonated analyzer (Biased Control). This sum is the input to the Programmable Controller. This signal is also indicated on the Dechlorination Control Panel. The indicator has a range of -1.0 to 4.0 mg/l total chlorine residual.

The Programmable Controller has a manually adjustable set point and set point indicator. Output from the Programmable Controller (either a manual or automatic signal) can adjust the feed rate of any sulfonator in the remote mode.

The operator may select either dechlorination control strategy from the programmable controller.

Only one sulfonator will operate in the remote mode at any given time. Whenever a sulfonator in the remote mode reaches its full capacity or minimum capacity, a second sulfonator will need to be manually turned on or off. Whenever a sulfonator in the remote mode reaches its full capacity or minimum capacity an alarm annunciator will sound and an indication light on the Dechlorination Control Panel will light. Two indicating lights are provided. One for "maximum sulfonator rate exceeded" and one for "minimum sulfonator rate".

c. RESIDUAL CONTROL

Residual control has been provided as a second means of remote control for the sulfonators. This mode is a conventional feed forward compound loop control wherein the sulfur dioxide feed rate is automatically adjusted to feed the amount of sulfur dioxide calculated by the programmable controller based on the pre-sulfonated sample reading of chlorine residual and the flow rate. For this mode of control, a manually adjustable ratio station with a minimum range of 0.5 to 1.5 is provided as part of the microprocessor. This mode of operation is seldom selected since zero chlorine residual measurements are unreliable.

d. OTHER EQUIPMENT

The sulfonation system is equipped with a sulfur dioxide totalizer located on the Dechlorination Control Panel. The totalizer receives signals from each sulfonator, and totals the amount of sulfur dioxide being used. The totalizer reads out directly in pounds of sulfur dioxide used. Display is digital, LED type. The totalizer is furnished and installed with an external, face-mounted reset switch so that the totalizer can be reset to zero during any point of operation. The totalizer is

programmable and automatically records the latest reading so that, in case of power loss, the last reading is saved and then displayed after power is resumed.

C. SULFUR DIOXIDE UNLOADING STATION

(1) DESCRIPTION

The sulfur dioxide unloading station is an elevated platform which is located between the two railroad sidings (provided to receive tank cars of liquid sulfur dioxide) and is provided with a 1-inch liquid sulfur dioxide feed line and a 1-inch liquid sulfur dioxide standby line. Each line is provided with a shutoff valve, a pressure gauge, a pressure switch and an expansion tank with a rupture disc and pressure switch. The liquid sulfur dioxide feed line and standby line are each arranged so that not more than one tank car can be connected at a time. See Figure III-FL-DCL-1 for connection arrangements.

(2) NORMAL OPERATION

Normal operation can be performed manually or automatically from the control panel in the control room. In MANUAL mode there is a variable control switch that allows the control of the gas feed rate. In AUTO mode you can choose the Residual Control or Feed Forward Control.

(3) START UP

- Make the proper connections to the sulfur dioxide rail tank cars (using the same procedures used for the chlorine rail car hook-up).

- Open all appropriate line valves.

- Turn power on to the evaporators and sulfonators.

- Check the sight glass tube on the evaporators to be sure that the water level in the heating chamber is correct. It takes about 2 hours for the evaporators to heat-up and stabilize.

- Adjust the heat limit controls located on the bottom of the evaporator panels as follows:

  Control Temperature 180°F
  High Temperature 200°F
  Low Temperature 100°F

- Put all residual analyzers on line.

- Turn power on to all ejectors from the (2) control panels. Put in manual mode, open the inlet valve and the outlet valve, and turn ejector pump on manually. Observe to see if a vacuum is obtained at approximately 25" of Hg. If a vacuum has been maintained then put ejector pump controls in auto mode.

  The chemical solution should not be flowing through the sulfonator.

- Open the withdrawal valve one full turn.

CAUTION

Refer to Chapter VI - Safety for emergency equipment and safety procedures when handing sulfur dioxide.

D. AIR PADDING SYSTEM

The air padding system is designed to provide clean, dry air in sufficient quantity and pressure so that the contents of the sulfur dioxide rail car remain at a pressure at or above a low pressure set point, regardless of ambient temperature. The air padding system is not in operation under normal conditions.

E. SULFUR DIOXIDE CYLINDER STORAGE SYSTEM

(1) DESCRIPTION

Sulfur dioxide is supplied in liquid form in one ton containers which have a gross weight of approximately 3,700 pounds when full. The ends of these containers are convexed inward and the sides are crimped to form chimes which provide a substantial grip for the lifting beams. A motor operated three-ton monorail is provided to serve the chemical unloading area. The monorail transfers full cylinders from a delivery truck to the storage area and empty cylinders from the storage area to the truck. The monorail extends to the sulfur dioxide ton cylinder container cradles.

Each container is equipped with two identical valves near the center of one end. When the container is positioned accurately, the valves lie along a vertical line. In this setup, gaseous sulfur dioxide can be drawn from the top valve and liquid sulfur dioxide can be drawn from the bottom valve. The valves are protected against damage by a removable steel hood. As a safety measure, each container is also provided with a fusible metal type pressure relief device. This device melts in case of fire or other exposure to high temperature, thus relieving pressure and preventing rupture of the container.

A portable scale is available which attaches to the hoist and measures the weight of the cylinders. The weight of the cylinders can be used to determine their volume.

A continuous effort should be made to use the ton containers in the order in which they were received.

(2) NORMAL OPERATION

Normal operation can be performed manually or automatically from the control panel in the control room. In MANUAL mode there is a variable control switch that allows the control of the gas feed rate. In AUTO mode you can choose the Residual Control or Feed Forward Control.

(3) START UP

- Place SO_2 cylinders on the container cradles.

- Rotate cylinders on scales so that valves are vertical.

- Connect lines to the bottom (liquid) valve after checking that all line valves in the entire system have been closed.

- Open cylinder valves 1/4 turn and then check for leaks of joints around valves or other connections. If there are any leaks, close the cylinder valve and repair (leaks are detected by using vapors of ammonia solution).

- Leave valve on the cylinder 1/4 turn open and proceed to the sulfonator room if no leaks are found.

- Open all appropriate line valves.

- Turn power on to the evaporators and sulfonators.

- Check the sight glass tube on the evaporators to be sure that the water level in the heating chamber is correct. It takes about 2 hours for the evaporators to heat-up and stabilize.

- Adjust the heat limit controls located on the bottom of the evaporator panels as follows:

  Control Temperature 180°F
  High Temperature 200°F
  Low Temperature 100°F

- Put all residual analyzers on line.

- Turn power on to all ejectors from the (2) control panels. Put in manual mode, open the inlet valve and the outlet valve, and turn ejector pump on manually. Observe to see if a vacuum is obtained at approximately 25" of Hg. If a vacuum has been maintained then put ejector pump controls in auto mode.

  The chemical solution should not be flowing through the sulfonator.

- Open the cylinder valve one full turn.

F. EVAPORATORS

(1) DESCRIPTION

Three liquid sulfur dioxide evaporators are provided which have a total capacity to evaporate 18,000 pounds of liquid sulfur dioxide per day.

The evaporators have a seamless vaporizing pressure chamber with a liquid inlet and gas outlet supplied by ammonia couplings for quick connection or disconnection. A water bath supports the evaporator in such a manner as to provide free circulation of water around the chamber. This ensures an even flow of heat required to evaporate the liquid sulfur dioxide. The vaporizing chamber is hydrostatically tested at

1450 psi. The water bath is galvanized steel complete with vapor vent, drain, overflow, and water supply connection with automatic water level control. A water level gauge on the outside provides visual indication of the water level in the water chamber. The interior water bath and exterior sulfur dioxide chamber are insulated and cathodically protected against corrosion.

The evaporators automatically vaporize and superheat the liquid sulfur dioxide by at least 20°F by heat transferred from the water bath. The water bath is heated by means of an immersion heater. The water temperature control thermostat can be manually adjusted by turning the water temperature control dial on the front face of the evaporator. This energizes or de-energizes the electric immersion heater to maintain desired water temperature. The evaporators operate continuously with the output adjusted automatically by the process demand. The temperature of the water bath does not need to be changed to adjust to the changing demand loads. Because heat transfer is mainly confined to the evaporator section below the sulfur dioxide liquid level, a change in demand changes the liquid level exposing more or less of the heating surface. This causes more or less sulfur dioxide to be evaporated.

The low water temperature switch located on the front face of the evaporator, senses the minimum desirable temperature of the water in the water chamber. Should the water temperature fall below a preset limit, the pressure reducing and shut-off valve in the evaporator's discharge line will automatically close via a signal from the low water temperature switch. This automatically shuts off all flow from the evaporator to insure that no liquefied sulfur dioxide enters the gas handling components and to lower the gas pressure. A high water temperature switch is located next to the low water temperature switch. It can be manually adjusted to any maximum temperature setting of the water in the water chamber. Both the low and high water temperature switches actuate alarms.

A pressure relief valve with a connected vent alarm switch is included along with the vent blow-off valve to purge all sulfur dioxide vapors from the chamber.

(2) NORMAL OPERATION

The rate at which the sulfur dioxide evaporates depends upon the downstream pressure only, since the temperature of the water tank is kept constant. A constant withdrawal rate causes the sulfur dioxide in the evaporator to remain at a constant level. If the gas withdrawal rate is increased, the pressure in the cylinder is reduced. The liquid level in the cylinder then increases which exposes more liquid to the heat exchange surface and results in greater evaporation. The gas pressure builds up until it equals the supply pressure and the liquid level is restored to equilibrium. Similarly, a reduction in the withdrawal rate causes an increase in gas pressure which lowers the liquid exposed to the heat transfer surface and decreases the contact area; consequently, the rate of evaporation is reduced.

(3) START UP

The sulfur dioxide evaporators, which convert liquid sulfur dioxide into gas, can be placed into service by performing the following operations:

- Check that all the equipment on the downstream side of the evaporator such as: chlorine solution water pumps, the sulfonator, the ejector, piping and valves are in the ready state.
- Open the evaporator valves.
- Adjust the valves in the discharge lines to send the sulfur dioxide header to allow sulfur dioxide to flow to the evaporator.
- Open the appropriate valve in the liquid sulfur dioxide header to allow sulfur dioxide to flow to the evaporator.
- Switch on the evaporator's heater. Allow the evaporator to come up to operating temperature.
- Slowly open the evaporator inlet valve. This allows liquid sulfur dioxide to flow into the evaporator for conversion into gas.

G. SULFONATORS

(1) DESCRIPTION

A sulfonator is a gas regulating system whose job is to regulate the flow of sulfur dioxide gas. Three vacuum type sulfur dioxide solution units with an ultimate capacity of 6,000 lb/day have been provided. The rotameters and metering orifices supplied allow a maximum capacity, at this time, of 2,000 lb/day per sulfonator to provide greater accuracy at the lower production rates.

The sulfonators contain several major components. A vacuum regulator reduces the gas from a varying supply pressure to a constant regulated vacuum. Constant gas flow is maintained by a differential pressure regulator. To operate the differential pressure regulator more efficiently, a vacuum stabilizing valve that reduces the varying ejector vacuum to a more constant value is included. A vacuum breaker and relief valve protect against an excessive vacuum or an excessive positive sulfur dioxide gas pressure by shutting off the ejector, thereby, closing the system and venting the sulfonator to the atmosphere.

On the front cabinet of each sulfonator is a LOCAL/REMOTE selector switch to select either manual or remote control. In the manual mode, the dosage rate is manually adjustable from the front of the sulfonator. In the automatic mode, the feed rate is automatically adjusted in response to a 4-20 mA signal received from a remotely located programmable controller located in the Dechlorination Control Panel. These functions can also be controlled from the Dechlorination Control Panel in Filter Building No. 1. The flowmeter tube located on the outside of the sulfonator provides visual indication of the gas flow rate. Direct readings are provided in lb/day and grams/hr (or kilograms/hr). A vacuum gauge on the front cabinet provides readings in inches of mercury and kilopascals of the vacuum created by the ejector. The gas pressure gauge also located on the front cabinet next to the vacuum gauge provides readings in pounds per square inch (PSI) and kilopascals of the gas supply pressure. A power indication light is also provided.

Vacuum switches within the sulfonator warn of an inadequate or excessive vacuum condition by actuating an external alarm. Inadequate vacuum may be due to a loss of water supply pressure, partial blockage in the ejector or a leak in the vacuum portion of the sulfonator piping. Excessive vacuum indicates that the gas supply to the vacuum regulator has become exhausted, or a filter to the vacuum regulator is blocked by foreign matter or an inadvertent closure of the gas supply has occurred. Annunciators for each sulfonator for these two main conditions are located on the Dechlorination Control Panel in Filter Building No. 1.

The number of sulfonators in use varies according to the following schedules, which are based on the total sulfur dioxide requirement.

Increasing Feed Rate

Sulphur Dioxide Requirement:	No. of sulfonators operating:
Up to 2000 lbs/day	One Sulfonator
2,000 to 4,000 lbs/day	Two Sulfonators
4,000 to 6,000 lbs/day	Three Sulfonators

Decreasing Feed Rate

Sulphur Dioxide Requirement	No. of sulfonators operating
6,000 to 3,900 lbs/day	Three Sulfonators
3,900 to 1,900 lbs/day	Two Sulfonators
Below 1,900 lbs/day	One Sulfonator

Selector switch systems on the dechlorination control panel allows automatic sequencing of the sulfonators.

(2) NORMAL OPERATION

The gas enters the sulfonator and is heated by an electric heater. Heating the sulfur dioxide keeps impurities from depositing in the sulfonator and prevents the sulfur dioxide from reliquifying when the sulfonator is shut down. Sulfur dioxide then passes through a gas pressure regulating valve. The valve opens as a result of the vacuum created by the ejector. The gas then flows through a rotameter which measures and indicates the flow rate. From the rotameter, the gas flows through a V-notched orifice controller. By adjusting the size of the orifice, the gas flow rate can be controlled. The gas flow rate is entirely a function of the size of the orifice. This is made possible by a vacuum regulating valve on the downstream side of the orifice.

Table III-FL-DCL-2 presents a trouble shooting guide for the sulfur dioxide feed system.

(3) START UP

A sulfonator can be placed into service by performing the following operations:

- Open the appropriate valves in the sulfur dioxide solution lines to allow sulfur dioxide to flow through the diffusers to the mixer.

- Open the valve in the sulfonator inlet line.

- Open the valve in the sulfonator discharge line.

- Open the valve in the water supply line to the ejector. This will bring the plant chlorine solution system water supply to the ejectors. Proper ejector action may be determined by observation of at least a 5 inch vacuum on the ejector vacuum gauge. If a sufficient vacuum cannot be obtained, consult the Fischer & Porter Instruction Book No. 71J1300 and make the necessary adjustments.

- If proper ejector action is observed, adjust the Programmable Controller to obtain the desired method of control. The sulfonator will now be controlled automatically to maintain an appropriate sulfur dioxide dosage. If the sulfonator is to be operated manually, set the manual rate valve to provide the desired flow.

H. EJECTORS

The purpose of an ejector is to provide an operating vacuum for the sulfonator. The vacuum forces sulfur dioxide gas through the sulfonator to the three (3) ejectors where the sulfur dioxide gas mixes it with the water stream to form an aqueous sulfur dioxide solution. Each ejector is capable of dissolving 1,900 pounds of sulfur dioxide every 24 hours.

The water stream is provided by pumping chlorinated and strained effluent from Filter Building No. 1 to the Dechlorination Building

The aqueous sulfur dioxide solution is pumped to diffusers located in the downstream channels of the post aeration-chlorination tanks.

I. MECHANICAL MIXERS: JC4-MM-1 and 2

(1) DESCRIPTION

Two Sulfur Dioxide Mixers are provided in Junction Chamber No. 4 to mix and disperse sulfur dioxide into the plant effluent for dechlorination.

The mechanical mixers are constant speed vertical shaft units, designated JC4-MM-1 and 2, each driven by a 40 HP motor. Controls and instrumentation for the mechanical mixers are located on Motor Control Center MCC-59.

(2) NORMAL OPERATION

Both mechanical mixers are intended to operate simultaneously and continuously. Under most situations, one mixer should be sufficient to mix the sulfur dioxide with the effluent. The number of mixers to use will be based on experience. Each mechanical mixer is provided with ON-OFF push buttons with a locking device for the OFF push button and a TEST push button at the unit. The mixers are also provided with START-STOP push buttons on MCC-59. When the ON push buttons at the units and START push buttons on MCC-59 are depressed, the mixers will run continuously.

(3) START-UP AND SHUTDOWN PROCEDURES

To start-up and shut down the mechanical mixers, use the following procedures:

a. START-UP

- Close the associated circuit breaker on MCC-59
- Depress the ON push button at the unit
- Depress the START push button on MCC-59

b. SHUTDOWN

- Depress the STOP push button on MCC-59

NOTE

If maintenance is to be performed on the unit, depress the OFF push button, engage the locking device, and open the associated circuit breaker on MCC-59. Follow approved **Lockout/Tagout** procedures (See Chapter VI, Safety).

(4) MONITORS

Each mechanical mixers is provided with an elapsed time meter and a running indicating light on Motor Control Center MCC-59.

J. SULFUR DIOXIDE DOSAGE CONTROL

Approximately 1 mg/l of sulfur dioxide is required to dechlorinate 1 mg/l of hydrochloric acid (free chlorine residual). A ratio of one to one can thus be used initially to set the sulfur dioxide ratio station. The sulfur dioxide ratio station receives a signal from the chlorine residual analyzer which analyzes a pre-sulfonated sample reading. An operator can observe this concentration and raise or lower the sulfur dioxide ratio on the ratio station in an effort to get the effluent to meet standards.

Effluent sampling is required for the pre-sulfonated and post-sulfonated (final) effluent. The pre-sulfonated sample pump is located at the downstream end of the post aeration-chlorination tanks. The sample is pumped to chlorine analyzers in both the chlorine analyzer room at the post aeration-chlorination tanks and in Filter Building No. 1. The post-sulfonated sample pump is located at the downstream end of Junction Chamber No. 4. The sample is pumped to the chlorine analyzer in Filter Building No. 1.

The chlorine residual analyzer uses an ion specific probe to measure the conversion of iodide to iodine. The conversion is due to the oxidation of iodide by chlorine. The iodometric method is used to determine the total chlorine residual. The analyzers transmit a 4-20 mA non-linear signal. A digital signal converter is used to convert the non-linear signal to a 4-20 mA linear signal. Analyzer units are used to monitor the total chlorine residual prior to dechlorination (Pre-Sulfonate) and in the mixed sample (Biased sample). Both measurements are transmitted to the Programmable Controller located in Filter Building No. 1.

The controller uses the signals to monitor the dechlorination process and automatically adjust the sulfur dioxide feed rate. The controller transmits a 4-20 mA signal to the sulfonator rate control valve. The signal either increases or decreases the sulfur dioxide feed rate. The valve is identical to a chloramatic valve used on chlorinators. The valve can be operated in manual or remote mode from the unit or in remote mode from the Dechlorination Control Panel.

K. GAS DETECTION EQUIPMENT

(1) GAS DETECTORS

Sulfur dioxide gas is poisonous. The gas may cause varying degrees of irritation of the mucous membranes of the eyes, nose, throat and lungs, respiratory system, and skin. High concentrations will cause a sense of suffocation. Sulfur dioxide vaporizes to gas when exposed to normal atmospheric pressure and temperature. The gas must be detected immediately. Appropriate gas detectors are installed

in the Sulfur Dioxide Cylinder Storage Room, Sulfur Dioxide Feed Room, and SO_2 Rail Car Unloading Station. The detectors are designed to warn of the presence of sulfur dioxide gas in the air by activating an alarm light on the Dechlorination Control Panel in Filter Building No. 1. There is also an audible local alarm. The detectors in the ton containers storage and the feeder rooms activate wall mounted, blinking lights located both outside the access doors to those rooms and also within the rooms.

The sulfur dioxide gas detectors are mounted on the wall about six feet above the floor with a PVC tube extending down from the detector to within 6 inches of the floor. The air to be analyzed is continuously being drawn through the tube to the detector by a blower within the detector.

L. HOISTING EQUIPMENT

A three ton capacity, motor operated monorail hoist is located above the sulfur dioxide cylinder storage area in the Dechlorination Building

M. VENTILATION

(1) DESCRIPTION

The Ventilation System includes two exhaust fans designated D-CL2-EF-1 and D-CL2-EF-2.

(2) NORMAL OPERATION

Under normal operation one exhaust fan in the Dechlorination Building operates continuously.

(3) START-UP AND SHUTDOWN PROCEDURES

To start up and shutdown the ventilation system, use the following procedures:

a. START-UP

- Place manual toggle type starter switch near the fan to the ON position.

b. SHUTDOWN

- Place manual toggle type starter switch at the fan in the OFF position

(4) ALTERNATE OPERATION

When a sulfur leak is detected in the Dechlorination Building, both exhaust fans run in the high speed mode.

TABLE III-FL-DCL-2 TROUBLE SHOOTING GUIDE - SO_2 FEED SYSTEM

1.	Sulfonator will not feed at all (no rotameter indication) or will not come up to full feed. (Gas supply to sulfonator is working).				
	CAUSE		CHECK		SOLUTION
1a.	Insufficient injector	1a.	Injector vacuum solution discharge for accumulation of foreign material	1a.	Clean or replace parts if necessary. Fix pump if Booster pump for needed. service water.
1b.	Clogged vacuum regulator-check.	1b	Supply vacuum.	1b	Clean vacuum regulator-check unit.
1c.	Clogged gas line will not let gas get through fast enough to satisfy demand.	1c.	See 1b.	1c.	Clean supply
2.	Sulfonator feed working at high rates but will not control at low rates.				
	CAUSE		CHECK		SOLUTION
2a.	Vacuum regulator-unit not throttling sufficiently.	2a.	Supply vacuum.	2a.	Clean vacuum, check regulator, and check unit.
3.	No ejector vacuum at gas inlet to ejector.				
	CAUSE		CHECK		SOLUTION
3a.	Injector diaphragm valve not opening.	3a.	See if air is leaking into injector at rear.	3a.	Disassemble diaphragm, center plug O-ring, and large diaphragm-to-housing sealing ring. Replace parts as necessary.

III-FL-RWP RECLAIMED WATER PUMPING STATION(086)

A. GENERAL

The Reclaimed Water Pumping Station is a structure built within a channel of the Post Aeration - Chlorination Tanks. This structure contains the following equipment and systems:

- Water Reuse Pumps
- Knife Gate Valves
- Check Valves
- Relief Valve
- Flowmeter
- Monitor and Alarm
- Power Distribution System

Final effluent from Post Aeration - Chlorination Tank No. 2 flows into the Reclaimed Water Pumping Station through two sluice gates and alternately through a 24-inch line from Post Aeration - Chlorination Tank No. 3. (See Figure III-FL-RWP-1). The reclaimed water is pumped to the City of Tampa's McKay Bay Refuse-to-Energy Facility where it is used to provide makeup cooling water for the electric generators. The flow is metered at the pumping station discharge and again at the incinerator.

Refer to Table III-FL-RWP-1, Reclaimed Water Pumping Station - Facility Equipment Summary, for control numbers, manufacturers, equipment capacities, and operation, maintenance, contract plan and shop drawing references. Refer to the Contractor's O & M Manual for Manufacturer's Service Manuals pertaining to the Reclaimed Water Pumping Station facilities.

B. WATER REUSE PUMPS: CA-WP-1, CA-WP-2, AND CA-WP-3

(1) DESCRIPTION

The three (3) vertical turbine pumps provide makeup cooling water to the City owned incinerator at McKay Bay. The Water Reuse Pump Equipment consists of three vertical turbine pumps, designated CA-WP-1, CA-WP-2 and CA-WP-3, associated drive units and controls.

Pump CA-WP-1 is vertical turbine pump with a 50 horsepower motor. The pump is rated for 1200 gpm at a head of 120 feet. Pumps CA-WP-2 and CA-WP-3 are vertical turbine pumps with 15 horsepower motors. These pumps are rated for 575 gpm at a head of 46 feet.

The Reclaimed Water Pumping Station instrumentation panel is located in the Filter Building.

(2) NORMAL OPERATION

Under normal operation, Water Reuse Pump No. 1 (CA-WP-1) operates as the sole pump. Each pump has a discharge line with an air relief valve, cushioned check valve and gate valve. The three discharge lines manifold into a single discharge which has a surge relief valve set at 70 psi. The discharge line is maintained at a pressure of 70 psi. Water Reuse Pump No. 3 is operated under an alternate operation (see "Alternate Operation" this section). Water Reuse Pump No. 2 operates as a standby unit.

(3) START-UP, SHUTDOWN AND DEWATERING PROCEDURES

To start up and shut down the water reuse pumps, follow the manufacturers recommendations and the following procedures:

a. START-UP

- Make sure the pumps are mechanically ready in accordance with the manufacturers recommendations.
- Make sure all valves are in the appropriate position.
- Place the HAND-OFF-AUTO switch in the HAND position located in th motor control center for the Filter Building crane bay.

b. SHUTDOWN

- Place the HAND-OFF-AUTO switch in the OFF position

(4) ALTERNATE OPERATION

a. WATER REUSE PUMP NO. 3 (CA-WP-3) IN OPERATION

If Water Reuse Pump No. 1 (CA-WP-1) is not in service, Water Reuse Pump No. 3 (CA-WP-3) will start automatically.

b. MANUAL OPERATION FROM PUMPING STATION

The operation of the pumps can be controlled from the remote control stations located adjacent to each access opening in the pumping station. The controls allow for the pumps to be started, stopped or jogged.

(5) MONITORS & ALARMS

Audible and visual alarms are located in the Process Control Room in the Main Pumping Station. The flow rate is transmitted to the Plant SCADA system.

C. POWER DISTRIBUTION SYSTEM

The power distribution system is shown in detail on the contract plans and various shop drawings. Refer to Table III-FL-RWP-1 Reclaimed Water Pumping Station - Facility Equipment Summary, for contract plan and shop drawing numbers which pertain to the power distribution system.

III-FS-FST FINAL SEDIMENTATION TANK NOS. 1-12 (012) AND 13-20 (061)

A. GENERAL

The twenty Final Sedimentation Tanks contain the following equipment and systems:

- Final Sedimentation Tanks
- Sludge Collection Equipment
- Sluice Gates
- Rate Controller Equipment
- Scum Collection System
- Flow Control Gates
- Air Diffuser System
- Effluent Water
- Plant Air
- Power Distribution System

Final Sedimentation Tank Nos. 1-12 work in conjunction with the High Purity Oxygen (HPO) Reactors. Final Sedimentation Tank Nos. 13-20 work in conjunction with the Diffused Air Reactors.

Refer to Table III-FS-FST-1, Final Sedimentation Tanks - Facility Equipment Summary, for control numbers, manufacturers, equipment capacities, and operation, maintenance, contract plan, and shop drawing references.

B. PROCESS CONTROL - ACTIVATED SLUDGE

Refer to the subsection headed "Process Control-Activated Sludge" in the sections headed "HPO Reactors" and "Diffused Air Reactors" for text describing Process Control of the Activated Sludge Process.

C. FINAL SEDIMENTATION TANKS

The Final Sedimentation Tanks are provided to remove activated sludge by gravity settling and also to remove scum and floatable biological solids (FBS).

(1) DESCRIPTION

The Final Sedimentation Tanks are provided to remove activated sludge and chemical sludge (by gravity settling) and scum and other floatable solids from the HPO and Diffused Air Reactors effluent flow. Final Sedimentation Tank Nos. 1-12 are each 247 feet long by 68 feet wide (16,796 sf) and have an average water depth of about 12 feet. Final Sedimentation Tank Nos. 13-20 are each 233 feet and 6 inches long by 72 feet wide (16,812 sf) and have an average water depth of about 12 feet. The tanks are located adjacent to each other and are of common wall construction. Each tank is provided with four longitudinal collectors and two cross collectors to move the settled sludge toward the sludge sump located near the midpoint of the tank.

Final Sedimentation Tank Nos. 1-12 are bordered on the north by an aerated influent channel and on the south by an effluent channel. Stop log grooves, sluice gates and slide gates are provided at various locations in the influent and effluent channels to permit flexibility in selecting the mode of operation (refer to Chapter II - "Process Description").

Final Sedimentation Tank Nos. 13-20 are bordered on the north by an aerated influent and mixed liquor transfer channels and on the south by an effluent channel.

Flow enters Final Sedimentation Tank Nos. 1-12 and Nos. 13-20 at the north end through four sluice gates. Flow from the tanks into the effluent channel is controlled by V-notch weirs mounted on weir troughs at the south end of the tanks.

Solids which settle out in Final Sedimentation Tank Nos. 1-12 and Nos. 13-20 are conveyed by the sludge collection equipment to the sludge sump. The solids are then removed from each tank by a sludge pump as described in Section III-FS-SPS headed "Sludge Pumping Station Nos. 1, 2, 3, 4 and 5."

Scum and other floatables are removed from Final Sedimentation Tank 13-20 as described in the subsection headed "Scum Collection System."

(2) NORMAL OPERATION

The two main modes of operation are the series mode and the parallel mode. In the series mode of operation, the six HPO Reactors work in conjunction with Final Sedimentation Tank Nos. 1-12 for secondary treatment and carbonaceous BOD_5 removal. The four Diffused Air Reactors work in conjunction with Final Sedimentation Tank Nos. 13-20 for second stage nitrification treatment.

In the parallel mode of operation, the HPO Reactors and Final Sedimentation Tank Nos. 1-12 work separately from the Diffused Air Reactors and Final Sedimentation Tank Nos. 13-20. A portion of the flow (up to 26 mgd, average) goes directly from the Main Pumping Station to the Diffused Air Reactors and Final Sedimentation Tank Nos. 13-20 for single-stage nitrification treatment in which biological denitrification is also possible. The remainder of the flow (up to 70 mgd, average) is directed to the HPO Reactors and Final Sedimentation Tank Nos. 1-12 for two-stage nitrification treatment or single-stage nitrification treatment. The process description for various modes of operation is included in Chapter II.

Under the series mode of operation, mixed liquor flows from the HPO Reactors to Final Sedimentation Tank Nos. 1-12 by gravity through two 96 inch by 72 inch underground conduits. Carbonaceous effluent flows from Final Sedimentation Tank Nos. 1-12 into Junction Chamber No. 5 and then to the Diffused Air Reactors through the Nitrification Pumping Station. From the Diffused Air Reactors, the nitrified mixed liquor flows through the Weir Structure and through the 171 inch by 72 inch Mixed Liquor Transfer Channels to the 171 inch by 108 inch influent channel for Final Sedimentation Tank Nos. 13-20. Nitrified effluent flows from Final Sedimentation Tank Nos. 13-20 through the 186 inch by 120 inch effluent channel to Junction Chamber No. 6 and then on to the Denitrification Filters. Most of the sludge collected in Final Sedimentation Tank Nos. 1-12 is continuously returned to the HPO Reactors and most of the sludge collected in Final Sedimentation Tank Nos. 13-20 is continuously returned to the Diffused Air Reactors. This return sludge is used to keep the Solids Retention Time (SRT) at the optimum level in the respective reactors. Since the carbonaceous activated sludge process (HPO Reactors) has a high BOD_5 and suspended solids removal efficiency, a regulated stream of primary treatment effluent can bypass the carbonaceous stage through a 20-inch diameter conduit through Junction Chamber No. 5, and be fed

directly into the nitrification stage (DAR) to supplement the food supply requirement of the nitrifying bacteria.

In the parallel mode, the HPO Reactors and Final Sedimentation Tank Nos. 1-12 can be run in a single-stage or a two stage nitrification process as follows:

- Single Stage Process. The flow pattern is identical to that for the series mode except the final effluent from Final Sedimentation Tank Nos. 1-12 flows through a 148 inch by 84 inch conduit directly to Denitrification Filters Nos. 1-20 and through a 72 inch diameter conduit directly to Denitrification Filters Nos. 21-26 and 31-36.

- Two-Stage Process. Mixed liquor flows to Final Sedimentation Tank Nos. 1-6 through a 96 inch by 72 inch conduit from the carbonaceous side of the HPO Reactors (Reactors Nos. 1, 2, or 3). Carbonaceous effluent flows from Final Sedimentation Tank Nos. 1-6 through a 96 inch by 72 inch underground conduit to the Intermediate Pumping Station and is pumped to the nitrification side of the HPO Reactors (Reactors Nos. 4-6, possibly 3). Nitrified mixed liquor flows through a 96 inch by 72 inch conduit to Final Sedimentation Tank Nos. 7-12 and then directly to the Denitrification Filters.

  In the parallel mode, some of the primary effluent is directed from the Main Pumping Station through Junction Chamber No. 5 and then to the Diffused Air Reactors through the Nitrification Pumping Station. From the Diffused Air Reactors, the nitrified mixed liquor flows through the Weir Structure and through the 171 inch by 72 inch Mixed Liquor Transfer Channels to the 171 inch by 108 inch influent channel for Final Sedimentation Tank Nos. 13-20. Nitrified effluent flows from Final Sedimentation Tank Nos. 13-20 through the 186 inch by 120 inch effluent channel to Junction Chamber No. 6 and then on to the Denitrification Filters. Most of the sludge collected in Final Sedimentation Tank Nos. 1-12 is continuously returned to the corresponding section of the HPO Reactors and most of the sludge collected in Final Sedimentation Tank Nos. 13-20 is continuously returned to the Diffused Air Reactors. This return sludge is used to keep the Solids Retention Time (SRT) at the optimum level in the respective reactors.

Refer to Chapter II for a complete process description and basis of design.

(3) START-UP, SHUTDOWN AND DEWATERING PROCEDURES

To start-up or shutdown a Final Sedimentation Tank, use the following procedures:

a. START-UP

- Select Final Sedimentation Tank or Tanks to be put into operation (see Figures III-FS-FST-1, 2, 4 and 5)

- For each Final Sedimentation Tank (Nos. 13-20), open one slide gate at the Weir Structure. (For Tank Nos. 13-16, open one gate at Weir Structure No. 1 for each Final Sedimentation Tank to be placed in operation. For Tank Nos. 17-20, open one gate at Weir Structure No. 2 for each Final Sedimentation Tank to be placed in operation)

- Open all associated Final Sedimentation Tank influent sluice gates in tank(s) to be placed in operation to 20 percent open until tank is full. This is to prevent damage to floor mounted equipment. Once the tank is full, fully open each influent sluice gate

- Start-up the following equipment as described elsewhere in this section: "Sludge Collection Equipment and "Scum Collection System"

- Start-up associated return sludge pump(s) as described in Section III-FS-SPS headed "Sludge Pumping Station Nos. 1, 2, 3, 4, and 5"

b. SHUTDOWN

- For Final Sedimentation Tank Nos. 13-20, close one slide gate at the Weir Structure. (For Tank Nos. 13-16, close one gate at Weir Structure No. 1 for each tank to be shutdown. For Tank Nos. 17-20, close one gate at Weir Structure No. 2 for each tank to be shutdown)

- Close the associated Final Sedimentation Tank influent sluice gates on each tank to be shutdown

- Shut down the following equipment as described elsewhere in this section: "Sludge Collection Equipment" and "Scum Collection System"

- Shut down the associated return sludge pump(s) as described in Section III-FS-SPS headed "Sludge Pumping Station Nos. 1, 2, 3, 4 and 5"

c. DEWATERING

To dewater a Final Sedimentation Tank or a portion of the in fluent or effluent channels, use the following procedures:

1. Dewatering - Final Sedimentation Tanks

- Shut down the tank(s) to be dewatered as described above

- Close the associated return sludge pump suction valve(s)

- Open the 20-inch tank drain valves in the associated Sludge Pumping Station(s)

- As the liquid level drops in the tank, wash down the tank walls and sludge collection equipment using the effluent water hose connection provided

NOTE

Final Sedimentation Tank Nos. 1-12 drain by gravity into the main drain, which empties into the Main Pumping Station Wet Well. The liquid level

in the Main Pumping Station Wet Well is maintained at El. +3.50. To completely empty a Final Sedimentation Tank No. 1 - 12, open drain valve and use Main Pumping Station wet well controller to lower level in the wet well and allow the tank to drain through the Main Drain.

Final Sedimentation Tank Nos. 13-20 drain by gravity through the 20-inch diameter return sludge pipe located in each tank. Final Sedimentation Tank Nos. 13-16 drain into the main drain located in Sludge Pumping Station No. 4 and Final Sedimentation Tank Nos. 17-20 drain into the main drain located in Sludge Pumping Station No. 5. The overall flow from the main drain located in Sludge Pumping Stations Nos. 4 and 5 is collected in the Dewatering Sump located east of Sludge Pumping Station No. 5 and is pumped to Junction Chamber No. 5 or to the effluent channel of Primary Sedimentation Tank Nos. 5-8.

- After the Final Sedimentation Tank has been completely dewatered, close the valve on the 20-inch tank drain in the associated Sludge Pumping Station(s)

2. Dewatering - Influent and Effluent Channels

(a) Final Sedimentation Tank Nos. 1-12

Dewatering sumps, sluice gates, stop log grooves and dewatering valves and connections have been provided to operate during the dewatering process. The entire influent or effluent channel may be dewatered or, by installing stop logs at various locations, only a portion of the influent or effluent channel may be dewatered, as required, leaving the remainder in service (see Figures III-FS-FST-1 and 2).

(b) Final Sedimentation Tank Nos. 13-20

Dewatering sluice gates and stop log grooves have been provided to operate during the dewatering process. The entire influent or effluent channel may be dewatered or, by installing stop logs at various locations, only a portion of the influent or effluent channel may be dewatered, as required, leaving the remainder in service (see Figures III-FS-FST-4 and 5).

D. SLUDGE COLLECTION EQUIPMENT: FT-LC-1A, 1B, 2A, 2B, 3A, 3B, 4A, 4B, 5A, 5B, 6A, 6B, 7A, 7B, 8A, 8B, 9A, 9B, 10A, 10B, 11A, 11B, 12A, 12B, 13A, 13B, 14A, 14B, 15A, 15B, 16A, 16B, 17A, 17B, 18A, 18B, 19A, 19B, 20A AND 20B AND FT-LCC-1A, 1B, 2A, 2B, 3A, 3B, 4A, 4B, 5A, 5B, 6A, 6B, 7A, 7B, 8A, 8B, 9A, 9B, 10A, 10B, 11A, 11B, 12A, 12B, 13A, 13B, 14A, 14B, 15A, 15B, 16A, 16B, 17A, 17B, 18A, 18B, 19A, 19B, 20A AND 20B

(1) DESCRIPTION

The sludge collection equipment is provided to convey sludge which has settled to the Final Sedimentation Tank floor to the sludge sump and to convey scum and floatable solids to the scum collecting troughs. The sludge collection equipment consists of longitudinal and cross collectors, two speed drive motors with gear reducers and operating controls. Table III-FS-FST-2 show the number, type and approximate size of longitudinal and cross collectors provided.

TABLE III-FS-FST-2 - SLUDGE COLLECTION EQUIPMENT

TANKS	NUMBER OF UNITS PROVIDED	TYPE	WIDTH	LENGTH
1-12	24	Longitudinal	15'-6"	124'-0"
1-12	24	Longitudinal	16'-0"	124'-0"
1-12	24	Longitudinal	15'-6"	118'-0"
1-12	24	Longitudinal	16'-0"	118'-0"
1-12	24	Cross	10'-0"	29'-0"
1-12	24	Drive Units	Longitudinal Collectors (124'-0")	
1-12	24	Drive Units	Longitudinal Collectors (118'-0") and Cross Collectors (29'-0")	
13-20	32	Longitudinal	17'-3"	115'
13-20	32	Longitudinal	17'-3"	100'
13-20	16	Cross	10'-0"	35'-6"
13-20	16	Drive Units	Longitudinal Collectors (115')	
13-20	16	Drive Units	Longitudinal Collectors (100') and Cross Collectors (35'-6")	

Four longitudinal collectors are provided in the influent and effluent ends of each Final Sedimentation Tank and two cross collectors are provided in the cross collector channel of each tank (see Figures III-FS-FST-1, 2, 3, 4, 5 and 6). Adjacent influent end longitudinal collectors are provided with common drive

units. Adjacent effluent end longitudinal collectors and one cross collector are provided with common drive units. The 24 influent end longitudinal collector drives for Final Sedimentation Tank Nos. 1-12 are designated FT-LC-1A, 1B, 2A, 2B, 3A, 3B, 4A, 4B, 5A, 5B, 6A, 6B, 7A, 7B, 8A, 8B, 9A, 9B, 10A, 10B, 11A, 11B, 12A and 12B. The 24 effluent end longitudinal and cross collector drives for Final Sedimentation Tank Nos. 1-12 are designated FT-LCC-1A, 1B, 2A, 2B, 3A, 3B, 4A, 4B, 5A, 5B, 6A, 6B, 7A, 7B, 8A, 8B, 9A, 9B, 10A, 10B, 11A, 11B, 12A and 12B. The 16 influent end longitudinal collector drives for Final Sedimentation Tank Nos. 13-20 are designated FT-LC-13A, 13B, 14A, 14B, 15A, 15B, 16A, 16B, 17A, 17B, 18A, 18B, 19A, 19B, 20A and 20B. The 16 effluent end longitudinal and cross collector drives for Final Sedimentation Tank Nos. 13-20 are designated FT-LCC-13A, 13B, 14A, 14B, 15A, 15B, 16A, 16B, 17A, 17B, 18A, 18B, 19A, 19B, 20A and 20B.

The longitudinal collectors are of the chain and flight type with a flight spacing of 10 feet and a flight travel speed of 1.0 feet per minute at slow speed and 2.0 feet per minute at fast speed. The cross collectors are of the chain and flight type with a flight spacing of 5 feet and a flight travel speed of 2.0 feet per minute at slow speed and 4.0 feet per minute at fast speed.

The operation and control of the sludge collecting equipment in Final Sedimentation Tank Nos. 1-12 and Final Sedimentation Tank Nos. 13-20 are as follows:

a. FINAL SEDIMENTATION TANK NOS. 1-12

Each drive unit is provided with an ON-OFF selector switch with a locking device for the OFF position and a CENTRAL CONTROL indication light at each unit. Drive units for flight collectors in Final Sedimentation Tank Nos. 1, 2, 3 and 4 are operated and controlled from Motor Control Center MCC-41 in Sludge Pumping Station No. 1. Drive units for flight collectors in Final Sedimentation Tank Nos. 5, 6, 7 and 8 are operated and controlled from Motor Control Center MCC-43 in Sludge Pumping Station No. 2. Drive units for flight collectors in Final Sedimentation Tank Nos. 9, 10, 11 and 12 are operated and controlled from Motor Control Center MCC-45 in Sludge Pumping Station No. 3. Each collector drive is provided with an ON-EMERGENCY STOP selector switch, FAST-STOP-SLOW push-button and operation indicating on its associated motor control center. A Master Control Panel is provided for each group of four collector drives (for example: FT-LC-1A and 1B and FT-LCC-1A and 1B). Each Master Control Panel is provided with a MANUAL-OFF-CENTRAL selector switch, a FAST-OFF-SLOW selector switch, a LOCK OUT RELAY RESET push button and operational indicating lights.

b. FINAL SEDIMENTATION TANK NOS. 13-20

Each drive unit is provided with an ON-OFF selector switch with a locking device for the OFF position and a CENTRAL CONTROL indication light at each unit. Drive units for flight collectors in Final Sedimentation Tank Nos. 13 and 14 are operated and controlled from Motor Control Center MCC-811 in Sludge Pumping Station No. 4. Drive units for flight collectors in Final Sedimentation Tank Nos. 15 and 16 are operated and controlled from Motor Control Center MCC-812 in Sludge Pumping Station No. 4. Drive units for flight collectors in Final Sedimentation Tank Nos. 17 and 18 are operated and controlled from Motor Control Center MCC-814 in Sludge Pumping Station

No. 5. Drive units for flight collectors in Final Sedimentation Tank Nos. 19 and 20 are operated and controlled from Motor Control Center MCC-815 in Sludge Pumping Station No. 5. Each collector drive is provided with FAST, SLOW and STOP push buttons, an elapsed time meter and operation indicating lights on its associated motor control center. A Master Control Panel is provided for each group of four collector drives at their associated motor control centers (for example: FT-LC-13A and 13B and FT-LCC-13A and 13B). Each Master Control Panel is provided with a MANUAL-OFF-CENTRAL selector switch, a FAST-OFF-SLOW selector switch, a TIMED-CONTINUOUS selector switch, and operational and CENTRAL CONTROL indicating lights. A Repeat Cycle Timer is also provided at the Master Control Panel for Tank Nos. 13 and 17. The Repeat Cycle Timer controls the sludge collection time for each system set for timed control (the Repeat Cycle Timer at Master Control Panel for Tank No. 13 controls timed sludge collection for Tank Nos. 13-16, and the Repeat Cycle Timer at Master Control Panel for Tank No. 17 controls timed sludge collection for Tank Nos. 17-20). The Repeat Cycle Timer can be set for 0 to 120 minutes.

(2) NORMAL OPERATION

Each longitudinal collector scrapes settled sludge along the Final Sedimentation Tank floor to the cross collector channel, and the cross collectors scrape the sludge to the sludge sump. Each longitudinal collector also skims scum and other floatable solids from the liquid surface to the scum collection troughs (see Figure III-FS-FST-3 and 6).

(3) FINAL SEDIMENTATION TANK NOS. 1-12

Under normal operation, when the MANUAL-OFF-CENTRAL selector switch on the Master Control Panel is in the CENTRAL position, and the FAST-OFF-SLOW selector switch is in either the FAST or SLOW position, each of the four associated collector drive units will operate at the selected speed.

a. FINAL SEDIMENTATION TANK NOS. 13-20

Under normal operation, when the MANUAL-OFF-CENTRAL selector switch on the Master Control Panel is in the CENTRAL position, the TIMED-CONTINUOUS selector switch is in the CONTINUOUS position and the FAST-OFF-SLOW selector switch is in either the FAST or SLOW position, each of the four associated collector drive units will operate continuously at the selected speed.

(4) START-UP AND SHUTDOWN PROCEDURES

To start-up and shutdown the sludge collection equipment, use the following procedures:

a. FINAL SEDIMENTATION TANK NOS. 1-12

1. START-UP

Each of the four collector drive units on each Final Sedimentation Tank in service is required to be operating.

- Close the circuit breaker on the associated motor control center for each collector drive of each Final Sedimentation Tank in service

- Place the ON-OFF/LOCKOUT selector switch at each unit to be started in the ON position

- Place the ON-EMERGENCY STOP selector switch located on the associated motor control center for each collector drive to be started in the ON position

- On the Master Control Panel for each group of four collector drives to be started, place the MANUAL-OFF-CENTRAL selector switch in the CENTRAL position and press the RESET push button

- On the Master Control Panel for each group of four collector drives to be started, place the FAST-OFF-SLOW selector switch in either the FAST or SLOW position

2. SHUTDOWN

When the MANUAL-OFF-CENTRAL selector switch is in the CENTRAL position:

- Place the FAST-OFF-SLOW selector switch on the Master Control Panel in the OFF position to shutdown all four collector drives in a Final Sedimentation Tank

- Place the ON-EMERGENCY STOP selector switch at the associated motor control center in the EMERGENCY STOP position to shutdown an individual collector drive

When the MANUAL-OFF-CENTRAL selector switch is in the MANUAL position:

- Press the STOP push-button on the associated motor control center cubicle for the individual collector drive or drives to be shutdown

NOTE

If maintenance is to be performed on the unit, open the circuit breaker on the associated motor control center and place the ON-OFF selector switch at the unit in the OFF position and engage the locking device. Follow approved **Lockout/Tagout** procedures (See Chapter VI, Safety).

b. FINAL SEDIMENTATION TANK NOS. 13-20

1. START-UP

Each of the four collector drive units on each Final Sedimentation Tank in service is required to be operating.

- Close the circuit breaker on the associated motor control center for each collector drive of each Final Sedimentation Tank in service

- Place the ON-OFF/LOCKOUT selector switch at each unit to be started in the ON position

- On the Master Control Panel for each group of four collector drives to be started, place the MANUAL-OFF-CENTRAL selector switch in the CENTRAL position

- On the Master Control Panel for each group of four collector drives to be started, place the TIMED-CONTINUOUS selector switch in the CONTINUOUS position

- On the Master Control Panel for each group of four collector drives to be started, place the FAST-OFF-SLOW selector switch in either the FAST or SLOW position

2. SHUTDOWN

When the MANUAL-OFF-CENTRAL selector switch is in the CENTRAL position:

- Place the FAST-OFF-SLOW selector switch on the Master Control Panel in the OFF position to shutdown all four collector drives in a Final Sedimentation Tank

When the MANUAL-OFF-CENTRAL selector switch is in the MANUAL position:

- Press the STOP push button on the associated motor control center cubicle for the individual collector drive or drives to be shutdown

NOTE

If maintenance is to be performed on the unit, open the circuit breaker on the associated motor control center and place the ON-OFF selector switch at the unit in the OFF position and engage the locking device. Follow approved **Lockout/Tagout** procedures (See Chapter VI, Safety).

(5) ALTERNATE OPERATION

a. TIMED OPERATION (TANK NOS. 13-20)

When the TIMED-CONTINUOUS selector switch on the Master Control Panel is in the TIMED position, and the SLOW or the FAST push-button is depressed, each of the four associated collector drives will operate for the duration set on the REPEAT CYCLE TIMER as follows:

- Set the ON time, 0-120 minutes
- Set the OFF time, 0-120 minutes

NOTE

There are two timers provided for Final Sedimentation Tank Nos. 13-20. The sludge

collection system for Final Sedimentation Tank Nos. 13-16 are controlled by one timer and Final Sedimentation Tank Nos. 17-20 are controlled by a second timer.

b. MANUAL OPERATION

When the MANUAL-OFF-CENTRAL selector switch on the Master Control Panel is in the MANUAL position, each of the four associated collector drives is required to be started individually by pressing the FAST or SLOW push button for each unit on the associated motor control center cubicle.

(6) MONITORS AND ALARMS

a. FINAL SEDIMENTATION TANK NOS. 1-12

Each sludge collector drive is provided with a CENTRAL CONTROL indicating light at the unit and FAST, SLOW and STOP indicating lights on the associated motor control center. Each Master Control Panel for each group of four collector drives is provided with power on, LOCK OUT RELAY TRIP and CENTRAL CONTROL indicating lights.

Each output shaft of each gear reducer is provided with an overload release clutch and a throw-out square jaw clutch. If the starting or operating torque exceeds a preset value (9,000 in-lbs. for the longitudinal collectors - 2,000 in-lbs. for the cross collectors) the overload release clutch will disengage and trip a limit switch which in turn will close an alarm contact. The alarm is indicated on the annunciator panel of the associated motor control center. The annunciator panel only indicates from which group of four collector drives the alarm has originated. An operator is then required to go onto the associated Final Sedimentation Tank and determine which overload release clutch has disengaged.

NOTE

The overload release clutch is of the manual reset type. The clutch will need to be manually reset after any overload condition.

After an operator has determined which overload release clutch has been disengaged, the associated collector drive unit needs to be shut down (using the unit mounted ON-OFF switch) to permit the square jaw clutch to be manually disengaged. After the square jaw clutch has been manually disengaged the overload release clutch will no longer rotate and therefore no longer automatically reset itself. The collector drive unit may now be restarted to allow the other collector or collectors to continue to operate.

CAUTION

If the square jaw clutch is not disengaged after the overload release clutch has disengaged and the

collector drive unit continues to run, severe wear will occur to the drive pawl and rotor of the overload release clutch.

b. FINAL SEDIMENTATION TANK NOS. 13-20

Each sludge collector drive is provided with a CENTRAL CONTROL indicating light at the unit and FAST, SLOW and OFF indicating lights on the associated motor control center. Each Master Control Panel for each group of four collector drives is provided with POWER ON and CENTRAL CONTROL indicating lights.

Each output shaft of each gear reducer is provided with an overload release clutch and a throw-out square jaw clutch. If the starting or operating torque exceeds a preset value (10,000 in-lbs. for the longitudinal collectors - 5,000 in-lbs. for the cross collectors) the overload release clutch will disengage and trip a limit switch which in turn will close an alarm contact. The alarm is indicated on Annuciator Panel Nos. 4 and 5 in Sludge Pumping Station Nos. 4 and 5, respectively. The Annunciator Panel only indicates from which group of four collector drives the alarm has originated. An operator is then required to go onto the associated Final Sedimentation Tank and determine which overload release clutch has disengaged.

When an overload occurs, the drive pawl is forced out of its engaged position from the rotor and the reset pawl locks it away from contact with the rotor. The clutch will then rotate freely. After the overload has been corrected, the clutch is reset by inserting a hexagon wrench in the reset screw, No. 20, and turning the screw clockwise until the reset pawl releases the drive pawl. After the drive pawl has been re-engaged with the rotor, the reset pawl must be put back in its original position to restore the original torque setting.

After an operator has determined which overload release clutch has been disengaged, it is required that the associated collector drive unit be shutdown (using the unit mounted ON-OFF switch) until the overload has been corrected. The collector drive unit may then be restarted to allow the other collector or collectors to continue to operate

Remote Transmission Units in Sludge Pumping Station Nos. 4 and 5 continuously scan and transmit the condition of all status points, including Manual Control, Central Control Fast Speed, and Central Control Slow Speed for each collector drive, and all alarm points, consisting of Overload Release Clutch activation for Final Sedimentation Tank Nos. 13-20 to the computer logger in the Process Control Room in the Main Pumping Station for the Sludge Collection Equipment. Status and alarm points are received and displayed by the computer logger.

E. SLUICE GATES : FLOW INTO FINAL SEDIMENTATION TANK NOS. 1-20 - FT-SG-1A, 1B, 1C, 1D, 2A, 2B, 2C, 2D, 3A, 3B, 3C, 3D, 4A, 4B, 4C, 4D, 5A, 5B, 5C, 5D, 6A, 6B, 6C, 6D, 7A, 7B, 7C, 7D, 8A, 8B, 8C, 8D, 9A, 9B, 9C, 9D, 10A, 10B, 10C, 10D, 11A, 11B, 11C, 11D, 12A, 12B, 12C, 12D, 13A, 13B, 13C, 13D, 14A, 14B, 14C, 14D, 15A, 15B, 15C, 15D, 16A, 16B, 16C, 16D, 17A, 17B, 17C, 17D, 18A, 18B, 18C, 18D,

19A, 19B, 19C, 19D, 20A, 20B, 20C AND 20D; CHANNEL DEWATERING - FT-SG-1E, 5E, 7E AND 11; RATE CONTROLLER FT-SG-13; AND FINAL SEDIMENTATION TANK NOS. 13-20 SCUM COLLECTION SYSTEM - FT-FSG-13A, 13B, 13C, 13D, 14A, 14B, 14C, 14D, 15A, 15B, 15C, 15D, 16A, 16B, 16C, 16D, 17A, 17B, 17C, 17D, 18A, 18B, 18C, 18D, 19A, 19B, 19C, 19D, 20A, 20B, 20C AND 20D AND FT-ISG-1, 2, 3 AND 4

(1) DESCRIPTION

Sluice gates are provided to control flow into the Final Sedimentation Tanks, to dewater the influent channel, to remove FBS from the Final Sedimentation Tanks and to limit the maximum flow to the Nitrification Stage Reactors (see Figures III-FS-FST-1, 2, 3, 4, 5 and 6). Table III-FS-FST-4 indicates the Contract Plan designation number, size, type operator and function of the sluice gates.

TABLE III-FS-FST-4 - FUNCTION OF SLUICE GATES

GATE CONTRACT PLAN DESIGNATION	SIZE (INCHES)	OPERATOR TYPE	FUNCTION
FT-SG-1A, 1B, 1C and 1D	24 x 24	Electric Motor	Gates permit flow into Final Sedimentation Tank No. 1 (in open position)
FT-SG-2A, 2B, 2C and 2D	24 x 24	Electric Motor	Gates permit flow into Final Sedimentation Tank No. 2 (in open position)
FT-SG-3A, 3B, 3C and 3D	24 x 24	Electric Motor	Gates permit flow into Final Sedimentation Tank No. 3 (in open position)
FT-SG-4A, 4B, 4C and 4D	24 x 24	Electric Motor	Gates permit flow into Final Sedimentation Tank No. 4 (in open position)
FT-SG-5A, 5B, 5C and 5D	24 x 24	Electric Motor	Gates permit flow into Final Sedimentation Tank No. 5 (in open position)
FT-SG-6A, 6B, 6C and 6D	24 x 24	Electric Motor	Gates permit flow into Final Sedimentation Tank No. 6 (in open position)
FT-SG-7A, 7B, 7C and 7D	24 x 24	Electric Motor	Gates permit flow into Final Sedimentation Tank No. 7 (in open position)
FT-SG-8A, 8B, 8C and 8D	24 x 24	Electric Motor	Gates permit flow into Final Sedimentation Tank No. 8 (in open position)
FT-SG-9A, 9B, 9C and 9D	24 x 24	Electric Motor	Gates permit flow into Final Sedimentation Tank No. 9 (in open position)
FT-SG-10A, 10B, 10C and 10D	24 x 24	Electric Motor	Gates permit flow into Final Sedimentation Tank No. 10 (in open position)
FT-SG-11A, 11B, 11C and 11D	24 x 24	Electric Motor	Gates permit flow into Final Sedimentation Tank No. 11 (in open position)

TABLE III-FS-FST-4 - FUNCTION OF SLUICE GATES

GATE CONTRACT PLAN DESIGNATION	SIZE (INCHES)	OPERATOR TYPE	FUNCTION
FT-SG-12A, 12B, 12C and 12D	24 x 24	Electric Motor	Gates permit flow into Final Sedimentation Tank No. 12 (in open position)
FT-SG-13A, 13B, 13C and 13D	24 x 24	Electric Motor	Gates permit flow into Final Sedimentation Tank No. 13 (in open position)
FT-SG-14A, 14B, 14C and 14D	24 x 24	Electric Motor	Gates permit flow into Final Sedimentation Tank No. 14 (in open position)
FT-SG-15A, 15B, 15C and 15D	24 x 24	Electric Motor	Gates permit flow into Final Sedimentation Tank No. 15 (in open position)
FT-SG-16A, 16B, 16C and 16D	24 x 24	Electric Motor	Gates permit flow into Final Sedimentation Tank No. 16 (in open position)
FT-SG-17A, 17B, 17C and 17D	24 x 24	Electric Motor	Gates permit flow into Final Sedimentation Tank No. 17 (in open position)
FT-SG-18A, 18B, 18C and 18D	24 x 24	Electric Motor	Gates permit flow into Final Sedimentation Tank No. 18 (in open position)
FT-SG-19A, 19B, 19C and 19D	24 x 24	Electric Motor	Gates permit flow into Final Sedimentation Tank No. 19 (in open position)
FT-SG-20A, 20B, 20C and 20D	24 x 24	Electric Motor	Gates permit flow into Final Sedimentation Tank No. 20 (in open position)
FT-SG-1E	24 x 24	Handwheel	Permits dewatering of portion of influent channel serving Final Sedimentation Tank Nos. 1, 2, 3 and 4 (in open position)
FT-SG-5E	12 x 12	Handwheel	Permits dewatering of portion of influent channel serving Final Sedimentation Tank Nos. 5 and 6 (in open position)
FT-SG-7E	12 x 12	Handwheel	Permits dewatering of portion of influent channel serving Final Sedimentation Tank Nos. 7 and 8 (in open position)
FT-SG-11E	12 x 12	Handwheel	Permits dewatering of portion of influent channel serving Final Sedimentation Tank Nos. 9, 10, 11 and 12 (in open position)
FT-SG-13	36 x 36	Modulating Electric	See subsection headed "Rate Controller Equipment"

TABLE III-FS-FST-4 - FUNCTION OF SLUICE GATES

GATE CONTRACT PLAN DESIGNATION	SIZE (INCHES)	OPERATOR TYPE	FUNCTION
FT-FSG-13A, 13B, 13C and 13D	24 x 24	Electric Motor	Gates permit scum and FBS removal from Final Sedimentation Tank No. 13 (in open position)
FT-FSG-14A, 14B, 14C and 14D	24 x 24	Electric Motor	Gates permit scum and FBS removal from Final Sedimentation Tank No. 14 (in open position)
FT-FSG-15A, 15B, 15C and 15D	24 x 24	Electric Motor	Gates permit scum and FBS removal from Final Sedimentation Tank No. 15 (in open position)
FT-FSG-16A, 16B, 16C and 16D	24 x 24	Electric Motor	Gates permit scum and FBS removal from Final Sedimentation Tank No. 16 (in open position)
FT-FSG-17A, 17B, 17C and 17D	24 x 24	Electric Motor	Gates permit scum and FBS removal from Final Sedimentation Tank No. 17 (in open position)
FT-FSG-18A, 18B, 18C and 18D	24 x 24	Electric Motor	Gates permit scum and FBS removal from Final Sedimentation Tank No. 18 (in open position)
FT-FSG-19A, 19B, 19C and 19D	24 x 24	Electric Motor	Gates permit scum and FBS removal from Final Sedimentation Tank No. 19 (in open position)
FT-FSG-20A, 20B, 20C and 20D	24 x 24	Electric Motor	Gates permit scum and FBS removal from Final Sedimentation Tank No. 20 (in open position)
FT-ISG-1, 2, 3 and 4	24 x 12	Hand Operated	Gates permit scum and FBS removal from Final Sedimentation Tank Nos. 13-20 Influent Channel (in open position)

Slide gate grooves are provided to permit isolation of each Final Sedimentation Tank influent sluice gate (see Figures III-FS-FST-1, 2, 4 and 5). Twelve slide gates for this purpose at Tank Nos. 1-12 have been supplied and are in storage.

Stop log grooves have been provided in the influent channel to permit dewatering of portions of the channel as described in Table III-FS-FST-4 (see Figures III-FS-FST-1, 2, 4 and 5).

Refer to the subsection herein titled "Scum Collection Equipment" for further information on sluice gates FT-FSG 13A through 20D and FT ISG-1 through 4. Refer to the subsection herein titled "Rate Control Equipment" for further information on sluice gate FT-SG-13.

(2) NORMAL OPERATION

Sluice Gates FT-SG-1A, 1B, 1C, 1D, 2A, 2B, 2C, 2D, 3A, 3B, 3C, 3D, 4A, 4B, 4C, 4D, 5A, 5B, 5C, 5D, 6A, 6B, 6C, 6D, 7A, 7B, 7C, 7D, 8A, 8B, 8C, 8D, 9A, 9B, 9C, 9D, 10A, 10B, 10C, 10D, 11A, 11B, 11C, 11D, 12A, 12B, 12C and 12D are located in the influent channel and control flow into Final Sedimentation Tank Nos. 1-12. Sluice Gates FT-SG-13A, 13B, 13C, 13D, 14A, 14B, 14C, 14D, 15A, 15B, 15C, 15D, 16A, 16B, 16C, 16D, 17A, 17B, 17C, 17D, 18A, 18B, 18C, 18D, 19A, 19B, 19C, 19D, 20A, 20B, 20C and 20D are located in the influent channel and control flow into Final Sedimentation Tank Nos. 13-20. The sluice gates are intended to be completely open or completely closed. The sluice gates are motor operated and are provided with an OPEN-CLOSE-STOP push button with a locking device for the STOP position at each unit for local operation. Sluice Gates FT-SG-13A through 20D are also provided with a LOCAL-OFF-REMOTE selector switch at each unit. The selector switch is lockable in the three positions which assigns control positively to the syncropak OPEN-CLOSE-STOP push button, the remote motor control center or renders the unit electrically inoperable.

Sluice gates associated with Final Sedimentation Tank Nos. 1, 2, 3 and 4 are provided with OPEN, CLOSE and STOP push buttons and remote gate position indicators on Motor Control Center MCC-41 in Sludge Pumping Station No. 1.

Sluice gates associated with Final Sedimentation Tank Nos. 5, 6, 7 and 8 are provided with OPEN, CLOSE and STOP push buttons and remote gate position indicators on Motor Control Center MCC-43 in Sludge Pumping Station No. 2.

Sluice gates associated with Final Sedimentation Tank Nos. 9, 10, 11 and 12 are provided with OPEN, CLOSE and STOP push buttons and remote gate position indicators on Motor Control Center MCC-45 in Sludge Pumping Station No. 3.

Sluice gates associated with Final Sedimentation Tank Nos. 13-16 are provided with OPEN, CLOSE and STOP push buttons and remote gate position indicators on Motor Control Center, MCC-811 and MCC-812 in Sludge Pumping Station No. 4.

Sluice gates associated with Final Sedimentation Tank Nos. 17-20 are provided with OPEN, CLOSE and STOP push buttons and remote gate position indicators on Motor Control Center, MCC-814 and MCC-815 in Sludge Pumping Station No. 5.

When the LOCAL-OFF-REMOTE selector switch is in the LOCAL position, the operation of the sluice gate is controlled by pressing the OPEN/CLOSE/STOP push button located at the unit. When the LOCAL-OFF-REMOTE selector switch is in the REMOTE position, the operation of the sluice gate is controlled by pressing the OPEN, CLOSE and STOP push buttons located at each corresponding motor control

center. When the LOCAL-OFF-REMOTE selector switch is in the OFF position, the selector switch lever rides over and automatically depresses the OPEN/CLOSE/STOP push button in the STOP position. Any position can be maintained by using a hasp padlock.

Sluice gates FT-SG-1E, 5E, 7E and 11E are located in the influent channel for Final Sedimentation Tank Nos. 1-12 and are provided to dewater the influent channel. Each sluice gate is manually operated by means of a handwheel. Turning the handwheel in the counterclockwise direction opens the gate.

(3) START-UP AND SHUTDOWN PROCEDURES

The following procedure applies to all sluice gates with motor operators, except sluice gates FT-SG-13, FT-FSG-13A through 20D and FT-ISG-1 through 4 . Refer to the subsection headed "Rate Controller Equipment" for normal operation of Sluice Gate FT-SG-13. Refer to the subsection headed "Scum Collection Equipment" for normal operation of sluices gates FT-FSG-13A through 20D and FT-ISG-1 through 4.

a. START-UP

- Close the associated circuit breaker on MCC-41, MCC-43, MCC-45, MCC-811, MCC-812, MCC-814 or MCC-815

- Place the LOCAL-OFF-REMOTE selector switch at the unit in the REMOTE position (for FT-SG-13A through 20D)

- Press the OPEN or CLOSE push button on the associated motor control center

NOTE

Limit switches are provided to de-energize the motor operator when the gate arrives at the completely OPEN or CLOSED position.

b. SHUTDOWN

- Press the STOP push button at either the sluice gate or the associated motor control center

NOTE

If maintenance is to be performed on the unit, open the circuit breaker on the associated motor control center and engage the locking device on the STOP push button at the unit. Follow approved **Lockout/Tagout** procedures (See Chapter VI, Safety).

(4) ALTERNATE OPERATION

a. LOCAL OPERATION

Each sluice gate can be controlled at the unit as follows:

- Place the LOCAL-OFF-REMOTE selector switch in the LOCAL position (for FT-SG-13A through 20D)
- Place the OPEN/CLOSE/STOP push button in the OPEN or CLOSE position

b. MANUAL OPERATION

Each motor operator is provided with a handwheel for manual operation as follows:

- Place the LOCAL-OFF-REMOTE selector switch in the OFF position (for FT-SG-13A through 20D)
- Depress the motor operator declutching lever
- Turn handwheel counterclockwise to open or clockwise to close gate

NOTE

Energizing the motor operator automatically disengages the declutching lever and returns gate to motor operation.

(5) MONITORS

Torque switches are provided to de-energize the motor operator if the gate movement becomes obstructed. Refer to the Divisions 4H4 and 5H4 Contractor's O & M Manual for manufacturer's literature that describes the setting and operation of the torque switches.

Each sluice gate is provided with a gate position indicator on its motor operator and on its associated motor control center.

Remote Transmission Units in Sludge Pumping Station Nos. 4 and 5 continuously scan and transmit the condition of all status and alarm points to the computer logger in the Process Control Room in the Main Pumping Station for the sluice gates. Status and alarm points are received and displayed by the computer.

F. RATE CONTROLLER EQUIPMENT: FT-W-1 AND 2 AND FT-SG-13

(1) DESCRIPTION

The rate controller equipment is provided to automatically divert excessive flow rates from the effluent channel of Final Sedimentation Tank Nos. 1-12 to the Post-Aeration-Chlorination Tanks.

The rate controller equipment consists of two secondary control weirs, designated FT-W-1 and 2. (A sluice gate, designated FT-SG-13 and venturi meter, designated MRC-15, has also been provided; however, this venturi meter is not in use at this time. The function of FT-SG-13 and MRC-15 have largely been replaced by FT-W-1 and 2.)

The secondary control weir is provided at the effluent channel of Final Sedimentation Tank Nos. 1-12 to adjust the liquid level at which secondary effluent overflows to the Secondary Effluent Control Channel during the two-stage nitrification process. The secondary control weir is only lowered when it is desired to bypass carbonaceous or nitrification effluent around the filters.

The secondary control weir equipment consists of the following:

- One 40-foot 6-inch wide by 4-foot high motor operated movable control weir with three gear boxes located at the effluent channel of Final Sedimentation Tank Nos. 1-12

The secondary control weir is motor operated and controlled at the weir.

Sluice gate FT-SG-13 is 36 inch by 36 inch gate and is provided to control the rate at which secondary effluent overflows to the Secondary Effluent Control Channel. The gate is provided with a modulating electric motor operator with an OPEN-CLOSE push button and a handwheel for manual operation. (The function of FT-SG-13 has largely been replaced by FT-W-1 and 2.)

(2) NORMAL OPERATION

Under normal operation, FT-SG-13 is arranged to divert flow from the effluent channel of Final Sedimentation Tank Nos. 1-12 to the Post-Aeration-Chlorination Tanks through the secondary treatment control conduit under emergency conditions.

Normal operation of the secondary control weir is OPEN, CLOSE and STOP from the operator disconnect breaker and control station.

Normal operation of sluice gate FT-SG-13 is by the OPEN-CLOSE push button at the gate. FT-SG-13 is normally in the closed position.

(3) START-UP AND SHUTDOWN PROCEDURES

To start-up and shutdown the rate controller equipment use the following procedures:

a. START-UP

- Close circuit breaker for the secondary control weir on MCC-43 in Sludge Pumping Station No. 2
- Press the OPEN or CLOSE push button at the operator disconnect breaker and control station
- Close the circuit breaker for Sluice Gate FT-SG-13 on Motor Control Center MCC-41 in Sludge Pumping Station No. 1
- Close the circuit breaker for Sluice Gate FT-SG-13 in the Outdoor Circuit Breaker enclosure which is mounted near the gate
- Press the OPEN or CLOSE push button at the gate

b. SHUTDOWN

- Press the STOP push button for the secondary control weir at the operator disconnect breaker and control station

NOTE

If maintenance is to be performed, open the circuit breaker for the Secondary Control Weir on MCC-43 in Sludge Pumping Station No. 2. Follow approved **Lockout/Tagout** procedures (See Chapter VI, Safety).

- Press the CLOSE push button at the gate

NOTE

If maintenance is to be performed, verify that the sluice gate is closed and open the circuit breaker in the Outdoor Circuit breaker enclosure mounted near the gate. Follow approved **Lockout/Tagout** procedures (See Chapter VI, Safety).

(4) ALTERNATE OPERATION

a. HANDWHEEL OPERATION

The motor operator is provided with a handwheel for manual operation as follows:

- Depress motor operator declutching lever
- Turn handwheel counterclockwise to open or clockwise to close gate

NOTE

Energizing the motor operator automatically disengages the declutching lever and returns the gate to motor operation.

(5) MONITORS

The secondary control weir is provided with an OPEN indicating light and a CLOSED indicating light mounted on the local disconnect breaker and control station.

Torque switches are provided to de-energize the sluice gate motor if the gate movement becomes obstructed.

G. SCUM COLLECTION SYSTEM: FINAL SEDIMENTATION TANK NOS. 1-12; FT-SCT-1A, 1B, 2A, 2B, 3A, 3B, 4A, 4B, 5A, 5B, 6A, 6B, 7A, 7B, 8A, 8B, 9A, 9B, 10A, 10B, 11A, 11B, 12 AND 12B, FT-SLG-1 AND 2 AND FT-SLG-1A, 1B, 2A, 2B, 3A, 3B, 4A, 4B, 5A, 5B, 6A, 6B, 7A, 7B, 8A, 8B, 9A, 9B, 10A, 10B, 11A, 11B, 12A AND 12B; FINAL SEDIMENTATION TANK NOS. 13-20; FT-FSG-13A, 13B, 13C, 13D, 14A, 14B, 14C, 14D, 15A, 15B, 15C, 15D, 16A, 16B, 16C, 16D, 17A, 17B, 17C, 17D, 18A, 18B, 18C, 18D, 19A, 19B, 19C, 19D, 20A, 20B, 20C AND 20D, FT-ISG-1, 2, 3 AND 4 AND SWV-13A, 13B, 14A, 14B, 15A, 15B, 16A, 16B, 17A, 17B, 18A, 18B, 19A, 19B, 20A AND 20B

(1) DESCRIPTION

The scum collection system is provided to permit removal of scum and floating biological solids (FBS) which may collect at the ends of the influent channel and in the Final Sedimentation Tanks. Scum can be removed from the influent end and the effluent end of the tanks.

The Scum Collection System at the influent end of the Final Sedimentation Tank Nos. 1-12 consists of four 12-inch motor operated rotating scum pipes, four 14-inch motor operated rotating scum pipes, eight 16-inch rotating scum pipes, and eight 20-inch rotating scum pipes. The scum collection system at the effluent end consists of two 24-inch manually operated down opening slide gates and twenty-four 24-inch by 24-inch self-contained, motor operated slide gates and operating controls. One manually operated down opening slide gate is located at the west and one is located at the east end of the influent channel of Final Sedimentation Tank Nos. 1-12 and two self-contained motor operated slide gates are located in the scum collecting trough of each of the twelve Final Sedimentation Tanks.

The Scum Collection System for Final Sedimentation Tank Nos. 13-20 consists of scum collection and transfer troughs, thirty-two 24-inch by 24-inch self contained, motor operated sluice gates and operating controls and sixteen 2-inch solenoid spray water valves. The Scum Collection System operates in a similar manner for the influent and the effluent ends of Final Sedimentation Tank Nos. 13-20, except the spray water is only located in the influent end. Four 24-inch by 12-inch hand operated sluice gates are provided for scum and FBS removal from the influent channel of Final Sedimentation Tank Nos. 13-20.

a. FINAL SEDIMENTATION TANK NOS. 1-12

1. Influent End Skimming

Rotating Scum Pipes FT-SCT-1A, 1B, 2A, and 2B are provided with a common circuit breaker and rotating Scum Pipes FT-SCT-3A, 3B, 4A, and 4B are provided with a separate common circuit breaker on Motor Control Center MCC-41 in Sludge Pumping Station No. 1. Rotating Scum Pipes FT-SCT-5A, 5B, 6A, and 6B are provided with a common circuit breaker and rotating Scum Pipes FT-SCT-7A, 7B, 8A, and 8B are provided with a separate common circuit breaker on Motor Control Center MCC-43 in Sludge Pumping Station No. 2. Rotating Scum Pipes FT-SCT-9A, 9B, 10A, and 10B are provided with a common circuit breaker and rotating Scum Pipes FT-SCT-11A, 11B, 12A, and 12B are provided with a separate common circuit breaker on Motor Control Center MCC-45 in Sludge Pumping Station No. 3.

Each rotating scum pipe operator is provided with an ON/OFF-LOCKOUT switch, a LOCAL-OFF-AUTOMATIC selector switch, NORTH/SOUTH push buttons and a SKIM/BACK SKIM control knob. When the selector switch is in the OFF position, the rotating scum pipe is operable only by the handwheel. When the selector switch is in the LOCAL position, the rotating scum pipe is operable by either the SKIM/BACK SKIM control knob or the handwheel. When the selector switch is in the AUTOMATIC position, the scum pipe is operable from the Scum Skimmer Control Panel (SSCP) located in the Sludge Pumping Station No. 2 Electrical Room.

2. Effluent End Skimming

Slide Gates FT-SLG-1A, 1B through 4A, 4B are provided with a common circuit breaker on Motor Control Center MCC-41. Slide Gates FT-SLG-5A, 5B through 8A, 8B are provided with a common circuit breaker on Motor Control Center MCC-43. Slide Gates FT-SLG-9A, 9B through 12A, 12B are provided with a common circuit breaker on Motor Control Center MCC-45.

Each slide gate motor operator is provided with a key operated LOCAL-OFF-REMOTE selector switch and OPEN-CLOSE push buttons. When the selector switch is in the LOCAL position, the slide gate is operable by either the OPEN-CLOSE push buttons or the handwheel. When the selector switch is in the REMOTE position, the slide gate is operable from the Scum Skimmer Control Panel in Sludge Pumping Station No. 2.

The Scum Skimmer Control Panel in Sludge Pumping Station No. 2 controls the sequence of skimming on both the influent and the effluent ends of the Final Sedimentation Tank Nos. 1-12. The panel consists of an ON-OFF power selector switch and POWER ON indicator light; a MANUAL-STEP push button; a TIMED-CONTINUOUS selector switch for skimming cycle mode; a CONTINUOUS CYCLE-AUTO-START push button; the Skimming Cycle Timer; a NORTH END/NO SKIP/SOUTH END Selector Switch for skimmer skip mode; three sets of skimmer ON-OFF selector switches, Skimming Timers, and Idle Timers for North Skimmers South Rotation, North Skimmers North Rotation, and South Skimmers; 24 North Skimmers Skimming North indicator lights; 24 North Skimmers Skimming South indicator lights; 24 South Skimmers Skimming indicator lights; 24 North Skimmers IN-OUT OF SERVICE selector switches; and 24 South Skimmers IN-OUT OF SERVICE selector switches.

The MANUAL-STEP push button provides a means of manually stepping through the skimming sequence. When the TIMED-CONTINUOUS selector switch is in the TIMED position, after a skimming cycle completes, a new cycle will begin when the Skimming Cycle Timer has timed out. The Skimming Cycle Timer has a range of 0 to 24 hours. When the TIMED-CONTINUOUS selector switch is in the CONTINUOUS position and the CONTINUOUS CYCLE AUTO START push button is pressed, a new skimming cycle will begin immediately after completion of the previous cycle.

The Skimmer Skip Mode selector switch can be set to one of three positions: NO SKIP, SOUTH END, or NORTH END. The NORTH END and SOUTH END settings allow one end of the tanks to be skimmed more frequently than the other end. When SOUTH END is selected, skimming of the effluent ends of all tanks will be skipped twice and skimmed during the third skimming sequence. Similarly, when NORTH END is selected, skimming of the influent ends of the tanks will be skipped twice and skimmed during the third skimming sequence. Selecting NO SKIP results in a normal skimming sequence.

The three skimmer ON-OFF selector switches provide the means to activate or deactivate the NORTH/SOUTH rotation of scum pipes at the influent and slide gate operation, respectively, for all 12 tanks. The three Skimming Timers each have a range of 0 to 10 minutes and control the amount of time the rotating scum pipes remain in skimming position for skimming the influent end of the tanks as well as the amount of time the slide gates remain open for skimming the effluent end of the tanks. The Idle Timers control the length of time between the end of one skimming event and the beginning of another (the time the rotating scum pipe or slide gate remains in the non-skimming or closed position until the next rotating scum pipe rotates into skimming position or the next slide gate opens).

The 24 IN-OUT OF SERVICE selector switches provide a means of disabling skimming in any tank.

b. FINAL SEDIMENTATION TANK NOS. 13-20

Sluice Gates FT-FSG-13A through 14D are provided with circuit breakers on Motor Control Center MCC-811 in Sludge Pumping Station No. 4. Sluice Gates FT-FSG-15A through 16D are provided with circuit breakers on Motor Control Center MCC-812 in Sludge Pumping Station No. 4. Sluice Gates FT-FSG-17A through 18D are provided with circuit breakers on Motor Control Center MCC-814 in Sludge Pumping Station No. 5. Sluice Gates FT-FSG-19A through 20D are provided with circuit breakers on Motor Control Center MCC-815 in Sludge Pumping Station No. 5.

Each sluice gate motor operator is provided with a LOCAL-OFF-REMOTE selector switch and an OPEN/STOP/CLOSE push button at the unit. When the selector switch is in the LOCAL position, the sluice gate is operable by the OPEN/STOP/CLOSE push button at the unit. When the selector switch is in the REMOTE position, the sluice gate is operable from the Scum Skimmer Control Panel in Sludge Pumping Station No. 5. When the selector switch is in the OFF position, the selector switch level rides over and automatically depresses the OPEN/STOP/CLOSE push button. Any position can be maintained by using a hasp padlock.

The Scum Skimmer Control Panel (SSCP) located in the Electrical Room of Sludge Pumping Station No. 5 controls the sequence of skimming on both the influent and the effluent ends of the Final Sedimentation Tank Nos. 13-20. The panel consists of an ON-OFF power selector switch and POWER ON indicator light; a CONTINUOUS-TIMED selector switch; a CONTINUOUS CYCLE AUTO START push button; a Skimming Cycle Timer; a MANUAL-STEP push button; a North

Skimmer ON-OFF selector switch; a South Skimmer ON-OFF selector switch; a SOUTH END/NO SKIP/NORTH END selector switch; 8 North Skimmer IN-OUT OF SERVICE selector switches; 8 South Skimmer IN-OUT OF SERVICE selector switches; two Skimming Timers and two Idle Timers (one each for the North Skimmers and South Skimmers), a North Spray Water Timer; 32 FBS Sluice Gate indicator lights; 16 Spray Water indicator lights; and a LAMP TEST push button to test all panel lights.

NOTE

The SSCP is provided with IN-OUT OF SERVICE selector switches and Sluice Gate and Spray Water indicator lights for future Final Sedimentation Tank Nos. 21-24. The skimming operation in the future tanks will be controlled by the SSCP and will be similar to that described below.

The ON-OFF power selector switch controls power to the SSCP. When the ON-OFF power selector switch is in the ON position, skimming will occur in Final Sedimentation Tank Nos. 13 - 20 according to the position of controls described below.

The CONTINUOUS-TIMED selector switch controls the skimming cycle mode of operation. When the CONTINUOUS-TIMED selector switch is in the CONTINUOUS position and the CONTINUOUS CYCLE AUTO START push button is pressed, skimming will proceed continuously (i.e. a new skimming cycle will begin immediately after completion of the previous cycle). When the CONTINUOUS-TIMED selector switch is in the TIMED position, skimming will proceed based on the setting of the Skimming Cycle Timer. The Skimming Cycle Timer controls the time between skimming event cycles for Tank Nos. 13-20 and has a range of 0 to 24 hours.

The MANUAL-STEP push button provides a means of manually skipping through an individual step in the skimming sequence. The steps involved in a skimming sequence are described below.

The North and South Skimmer ON-OFF selector switches provide the means to activate or deactivate the sluice gate operation at the influent or effluent end for all eight tanks. When the associated ON-OFF selector switch is in the ON position, all of the sluice gates on the North or South ends of the tank will take part in a skimming event. When the associated ON-OFF selector switch is in the OFF position, none of the sluice gates on the North or South ends of the tank will take part in a skimming event.

The SOUTH END/NO SKIP/NORTH END selector switch allows one end of the tanks to be skimmed more frequently than the other end. When the SOUTH END/NO SKIP/NORTH END selector switch is in the SOUTH END position, the sluice gates on the South end of the tanks will take part in the skimming event every other skimming cycle. Likewise, when the SOUTH END/NO SKIP/NORTH END selector switch is in the NORTH END position, the sluice gates on

the North end of the tanks will take part in the skimming event every other skimming cycle. When the SOUTH END/NO SKIP/NORTH END selector switch is in the NO SKIP position, sluice gates on the both ends of the tanks will take part in each skimming cycle.

The North and South Skimmer IN-OUT OF SERVICE selector switches provide a means of disabling skimming in an individual tank. Each IN-OUT OF SERVICE selector switch controls two FBS sluice gates on the North or South ends of each Final Sedimentation Tank. When the associated IN-OUT OF SERVICE selector switch is in the IN position, both of the sluice gates on the North or South ends of an individual tank will take part in a skimming event. When the associated IN-OUT OF SERVICE selector switch is in the OUT OF SERVICE position, neither of the sluice gates on the North or South ends of an individual tank will take part in a skimming event.

The Skimming Timer controls the amount of time the sluice gates remain open for a skimming event on the North and South end of the tanks. Each Skimming Timer has a range of 0 to 10 minutes. The Idle Timer controls the length of time between the end of one skimming event and the beginning of another (i.e. the time the sluice gate remains in the closed position until the next sluice gate opens). Each Idle Timer has a range of 0 to 30 minutes.

(2) NORMAL OPERATION

a. FINAL SEDIMENTATION TANK NOS. 1-12

SKIMMING OF CHANNELS

The influent channel of Final Sedimentation Tank Nos. 1-12 should be visually inspected periodically for the presence of scum and other floatables. When such materials are present, they may be removed by opening the associated manually operated down opening slide gate FT-SLG-1 or 2 (see Figures III-FS-FST-1 and 2).

NOTE

When scum is removed from the influent channel as described above, it is required that the slide gate remain open for at least one minute after all scum and floatables have been removed to insure adequate flushing of the scum manhole and scum piping.

SKIMMING OF TANKS

Under normal operation, the LOCAL-OFF-REMOTE selector switches on Slide Gates FT-SLG-1A through FT-SLG-12B are in the REMOTE position and the LOCAL-OFF-AUTOMATIC selector switches on rotating Scum Pipes FT-SCT-1A through FT-SCT-12B are in the AUTOMATIC position.

The controls on the Scum Skimmer Control Panel are required to be set as follows:

- Place the TIMED-CONTINUOUS selector switch in the CONTINUOUS position
- Place the Skimmer Skip Mode selector switch in the NO SKIP position
- Place the ON-OFF selector switches for North Skimmers South Rotation, North Skimmers North Rotation, and South Skimmers in the ON position
- Set the Skimming Time and the Idle Time for North Skimmers South Rotation, North Skimmers North Rotation, and South Skimmers (initial settings for a skimming time of 3 minutes and an idle time of 7 minutes are recommended)
- Open valves SC-330, SC-333, and SC-334 and close valves SC-331 and SC-332

When the power switch on the Scum Skimmer Control Panel is placed in the ON position, the controls have been set as described above and the CONTINUOUS CYCLE AUTO START push button is pressed, the Scum Collection System will operate as follows:

- The skimming sequence begins in Tank 1. Scum Pipe FT-SCT-1A will rotate to the South Skimming position and the skimming timer for North Skimmers Skimming South will begin to time
- After the skimming timer has timed out, the scum pipe will rotate back to the non-skimming position and the idle timer for North Skimmers Skimming South will begin to time
- After the idle timer has timed out, Scum Pipe FT-SCT-1B will rotate to the south skimming position and the skimming timer for North Skimmers Skimming South will begin to time
- After the skimming timer has timed out, the scum pipe will rotate back to the non-skimming position and the idle timer for North Skimmers Skimming South will begin to time
- After the idle timer has timed out, Scum Pipe FT-SCT-1A will rotate to the north skimming position and the skimming timer for North Skimmers Skimming North will begin to time
- After the skimming timer has timed out, the scum pipe will rotate back to the non-skimming position and the idle timer for North Skimmers Skimming North will begin to time
- After the idle time has timed out, Scum Pipe FT-SCT-1B will rotate to the north position and the skimming timer for North Skimmers Skimming North will begin to time
- After the skimming timer has timed out, the scum pipe will rotate back to the non-skimming position and the idle timer for North Skimmers Skimming North will begin to time

- After the idle timer has timed out, Slide Gate FT-SLG-1A will open and the skimming timer for South Skimmers will begin to time
- After the skimming timer has timed out, the slide gate will close and the idle timer for South Skimmers will begin to time
- After the idle timer has timed out, Slide Gate FT-SLG-1B will open and the skimming timer for South Skimmers will begin to time
- After the skimming timer has timed out, the slide gate will close and the idle timer for South Skimmers will begin to time
- After the idle timer has timed out, the skimming sequence will begin for Tank 2 and continue through Tank 12
- After the skimming sequence for Tank 12 finishes, the sequence will begin again for Tank 1

NOTE

The Scum Collection System will operate in the same manner when the TIMED-CONTINUOUS selector switch is in the TIMED position except as follows: when the skimming sequence begins for Tank 1, the Skimming Cycle Timer will begin to time. When the skimming sequence for Tank 12 completes, the sequence will not begin again for Tank 1 until the Skimming Cycle Timer has timed out.

b. FINAL SEDIMENTATION TANK NOS. 13-20

SKIMMING OF CHANNELS

The influent channel of Final Sedimentation Tank Nos. 13-20 should be visually inspected periodically for the presence of scum and other floatables. When such materials are present, they may be removed by opening the associated manually operated sluice gates FT-ISG-1, 2, 3 or 4 (see Figures III-FS-FST-4 and 5). The scum and other floatables are transferred to the influent end FBS transfer trough.

NOTE

When scum is removed from the influent channel as described above, it is required that the sluice gate remain open for at least one minute after all

scum and floatables have been removed to insure adequate flushing of the scum transfer channel.

SKIMMING OF TANKS

Under normal operation, the LOCAL-OFF-REMOTE selector switches on Slide Gates FT-SLG-13A through FT-SLG-20D are in the REMOTE position.

The controls on the Scum Skimmer Control Panel are required to be set as follows:

- Place the CONTINUOUS-TIMED selector switch in the CONTINUOUS position
- Place the SOUTH END/NO SKIP/NORTH END selector switch in the NO SKIP position
- Place the ON-OFF selector switches for North and South Skimmers in the ON position
- Place the IN-OUT OF SERVICE selector switches for North and South Skimmers in the IN position
- Set the Skimming Time and the Idle Time for North and South Skimmers (initial settings for a skimming time of 3 minutes and an idle time of 7 minutes are recommended)
- Set the Spray Water Time for the North Skimmers (Spray Water Time should have the same setting as the Skimming Time for the North Skimmers)

When the ON-OFF power selector switch on the SSCP is placed in the ON position, the controls have been set as described above and the CONTINUOUS CYCLE AUTO START push button is pressed, the Scum Collection System will operate as follows:

- The skimming sequence begins in Tank 13. Sluice Gate FT-FSG-13A and Spray Water Valve SWV-13A will open and the North Skimmer Skimming Timer will begin to time
- After the North Skimmer Skimming Timer has timed out, the sluice gate and spray water valve will close and the North Skimmer Idle Timer will begin to time
- After the North Skimmer Idle Timer has timed out, Sluice Gate FT-FSG-13B and Spray Water Valve SWV-13B will open and the North Skimmer Skimming Timer will begin to time
- After the North Skimmer Skimming Timer has timed out, the sluice gate and spray water valve will close and the North Skimmer Idle Timer will begin to time

- After the North Skimmer Idle Timer has timed out, Sluice Gate FT-FSG-13C will open and the South Skimmer Skimming Timer will begin to time

- After the South Skimmer Skimming Timer has timed out, the sluice gate will close and the South Skimmer Idle Timer will begin to time

- After the South Skimmer Idle Timer has timed out, Sluice Gate FT-FSG-13D will open and the South Skimmer Skimming Timer will begin to time

- After the South Skimmer Skimming Timer has timed out, the sluice gate will close and the South Skimmer Idle Timer will begin to time

- After the South Skimmer Idle Timer has timed out, the skimming sequence will begin for Tank 14 and continue through Tank 20

- After the skimming sequence for Tank 20 finishes, the sequence will begin again for Tank 13

NOTE

The Scum Collection System will operate in the same manner when the CONTINUOUS-TIMED selector switch is in the TIMED position except as follows: when the skimming sequence begins for Tank 13, the Skimming Cycle Timer will begin to time. When the skimming sequence for Tank 20 completes, the sequence will not begin again for Tank 13 until the Skimming Cycle Timer has timed out.

(3) START-UP AND SHUTDOWN PROCEDURES

a. FINAL SEDIMENTATION TANK NOS. 1-12

To start-up and shutdown the Scum Collection System use the following procedures:

1. Start-Up

- Close the associated circuit breakers for the slide gates and rotating scum pipes on Motor Control Centers MCC-41, MCC-43, and MCC-45

- Place the LOCAL-OFF-REMOTE selector switch in the REMOTE position on each slide gate motor operator

- Place the LOCAL-OFF-AUTOMATIC selector switch in the AUTOMATIC position on each rotating scum pipe motor operator

- On the Scum Skimmer Control Panel, place the ON-OFF power selector switch in the ON position and set the controls as described under "Normal Operation"

2. Shutdown
   - Place the ON-OFF power selector switch on the Scum Skimmer Control Panel in the OFF position

NOTE

One or more individual slide gates or rotating scum pipes may be taken out of the normal operation sequence by doing either of the following:

- Place the LOCAL-OFF-REMOTE (slide gates) or the LOCAL-OFF-AUTOMATIC (scum pipes) selector switch in the OFF position

- Or place the North Skimmers IN-OUT OF SERVICE and the South Skimmers IN-OUT OF SERVICE selector switches in the OUT OF SERVICE position

NOTE

If maintenance is to be performed on a motor operated slide gate or rotating scum pipe, open the circuit breaker(s) on the associated motor control center and engage the locking device on the STOP push button. If maintenance is to be performed on the Scum Skimmer Control Panel, place the ON-OFF power selector switch in the OFF position. Follow approved **Lockout/Tagout** procedures (See Chapter VI, Safety).

If the power selector switch on the Scum Skimmer Control Panel is placed in the OFF position while skimming is in progress, the rotating scum pipe will rotate to the non-skimming position and stop rotating or the slide gate will close.

b. FINAL SEDIMENTATION TANK NOS. 13-20

To start-up and shutdown the Scum Collection System use the following procedures:

1. Start-Up
   - Close the associated circuit breakers for the sluice gates and spray water valves on Motor Control Centers MCC-811, MCC-812, MCC-814 and MCC-815

   - Place the LOCAL-OFF-REMOTE selector switch located at each unit in the REMOTE position on each sluice gate motor operator

- On the SSCP, place the ON-OFF power selector switch in the ON position and set the controls as described under "Normal Operation"

2. Shutdown
   - Place the ON-OFF power selector switch on the SSCP in the OFF position

NOTE

One or more individual sluice gates may be taken out of the normal operation sequence by doing either of the following:

- Place the LOCAL-OFF-REMOTE selector switch in the OFF position to take an individual sluice gate out of service, or

- Place the North Skimmer IN-OUT OF SERVICE or the South Skimmer IN-OUT OF SERVICE selector switches in the OUT OF SERVICE position to shutdown one end of an individual tank

NOTE

If maintenance is to be performed on a motor operated sluice gate, open the circuit breaker(s) on the associated motor control center and engage the locking device on the STOP push button. If maintenance is to be performed on the SSCP, place the ON-OFF power selector switch in the OFF position. Follow approved **Lockout/Tagout** procedures (See Chapter VI, Safety).

If the ON-OFF power selector switch on the SSCP is placed in the OFF position while skimming is in progress, the sluice gate will close.

(4) ALTERNATE OPERATION

a. FINAL SEDIMENTATION TANK NOS. 1-12

LOCAL OPERATION

Each motor operated slide gate may be operated locally by placing the LOCAL-OFF-REMOTE selector switch in the LOCAL position and by pressing either the OPEN or CLOSE push button. Similarly, each motor operated rotating scum pipe may be operated locally by placing the LOCAL-OFF-AUTOMATIC selector switch in the LOCAL position and turning the control knob to either the Skim or Back Skim position.

MANUAL OPERATION

Each motor operator is provided with a handwheel for manual operation as follows:

- Place the LOCAL-OFF-REMOTE selector switch for slide gate(s) and/or LOCAL-OFF-AUTOMATIC selector switch for rotating scum pipe(s) in the OFF position
- Depress the motor operator declutching lever
- Turn the handwheel to open or close a slide gate or to rotate a rotating scum pipe

NOTE

Energizing the motor operator automatically disengages the declutching lever and returns the gate or rotating scum pipe to motor operation.

DISCHARGE LOCATION

Under normal operation, skimmings will discharge to the Scum Transfer Sump located in the Main Pumping Station. It is also possible to direct skimmings to the Main Drain by opening valves SC-331, SC-332, and SC-333 and closing valves SC-330 and SC-334.

b. FINAL SEDIMENTATION TANK NOS. 13-20

LOCAL OPERATION

Each motor operated sluice gate may be operated locally by placing the LOCAL-OFF-REMOTE selector switch in the LOCAL position and by placing the OPEN/STOP/CLOSE push button in the OPEN or CLOSE position.

MANUAL OPERATION

Each sluice gate motor operator is provided with a handwheel for manual operation as follows:

- Place the LOCAL-OFF-REMOTE selector switch in the OFF position
- Depress the motor operator declutching lever
- Turn the handwheel to open or close a sluice gate

NOTE

Energizing the motor operator automatically disengages the declutching lever and returns the gate to motor operation.

DISCHARGE LOCATION

Under normal operation, the FBS will discharge through the FBS Transfer Channel between Final Sedimentation Tank Nos. 17 and 18 into the FBS Sump in Sludge Pumping Station No. 5. For further information on the discharge of the FBS, refer to Section III-FS-SPS headed "Sludge Pumping Station Nos. 1, 2, 3, 4 and 5.

(5) MONITORS AND ALARMS

a. FINAL SEDIMENTATION TANK NOS. 1-12

Torque switches are provided to de-energize the slide gate or rotating scum pipe motor operators if gate or pipe movement becomes obstructed.

Each motor operated slide gate is provided with position indicating lights and each motor operated rotating scum pipe is provided with a position indicating dial, at the unit.

The SSCP contains six indicator lights for each of the 12 tanks to indicate which skimming event is currently in progress. The lights indicate whether the two rotating scum pipes in each tank are in the north or south position and whether the two slide gates in each tank are in the open or closed position.

b. FINAL SEDIMENTATION TANK NOS. 13-20

Torque switches are provided to de-energize the slide gate motor operator if gate movement becomes obstructed.

Each motor operated sluice gate is provided with position indicating lights at the unit.

The SSCP contains six indicator lights for each of the 8 tanks to indicate which skimming event is currently in progress. The lights indicate whether the two sluice gates in the north end of each tank are in the open or closed position, whether spray water valves in the north end of tank are in the open or closed position and whether the two sluice gates in the south end of each tank are in the open or closed position.

Remote Transmission Units in Sludge Pumping Station Nos. 4 and 5 continuously scan and transmit the condition of all status and alarm points to the computer logger in the Process Control Room in the Main Pumping Station for the Scum Collection System. Status and alarm points are received and displayed by the computer logger.

H. FLOW CONTROL GATES: FT-FCG-1, 2, 3 AND 4 AND FT-SLG-13

(1) DESCRIPTION

The flow control slide gates have been installed in the influent and effluent channels of Final Sedimentation Tank Nos. 1-12 and in the influent channel of Final Sedimentation Tank Nos. 13-20 to facilitate changing the flow patterns (modes of operation) within the tanks.

The flow control gates equipment consists of the following:

- One 7-foot 5-11/16-inch wide by 13-foot high self-contained motor operated slide gate, designated FT-FCG-1, located in the influent channel of Final Sedimentation Tank Nos. 1-12

- One 7-foot 5-11/16-inch wide by 13-foot high self-contained motor operated slide gate, designated FT-FCG-2, located in the effluent channel of Final Sedimentation Tank Nos. 1-12

- One 7-foot 2-1/2-inch wide by 13-foot high self-contained motor operated slide gate, designated FT-FCG-3, located in the effluent channel of Final Sedimentation Tank Nos. 1-12 to Denitrification Filter Nos. 1-20

- One 6-foot wide by 13-foot high self-contained motor operated slide gate, designated FT-FCG-4, located in the effluent channel of Final Sedimentation Tank Nos. 1-12 to Denitrification Filter Nos. 21-26 and 31-36

- One 7-foot 7-inch wide by 14-foot ½-inch high self-contained motor operated slide gate, designated FT-SLG-13, located in the influent channel of Final Sedimentation Tank Nos. 13-20

During the series mode of operation, slide gates FT-FCG-1 and 2 will be open and slide gates FT-FCG-3 and 4 will be closed, therefore forcing all effluent flow from Final Sedimentation Tank Nos. 1-12 through sluice gates JC5-SG-3 and 4 in Junction Chamber No. 5 into the Nitrification Pumping Station and the Diffused Air Reactors (see Figure III-FS-FST-1 and 2). For operation of sluice gates JC5-SG-1 and 2 in Junction Chamber No. 5, refer to Section III-DA-NPS headed "Nitrification Pumping Station and Junction Chamber No. 5.

During the parallel mode of operation and when the HPO system is operated as a two-stage system, slide gates FT-FCG-1 and 2 will be closed to isolate Final Sedimentation Tank Nos. 1-6 from 7-12, sluice gates JC5-SG-3 and 4 in Junction Chamber No. 5 will be closed to isolate the Diffused Air Reactors, and slide gates FT-FCG-3 and 4 will be open allowing the effluent flow from Final Sedimentation Tank Nos. 7-12 to flow directly into the Denitrification Filters (see Figure III-FS-FST-2). For operation of sluice gates JC5-SG-1 and 2 in Junction Chamber No. 5, refer to Section III-DA-NPS headed "Nitrification Pumping Station and Junction Chamber No. 5.

During the parallel mode of operation and when the HPO system is operated as a single-stage system, slide gates FT-FCG-1 and 2 will be open, sluice gates JC5-SG-3 and 4 in Junction Chamber No. 5 will be closed to isolate. The Diffused Air Reactors, and slide gates FT-FCG-3 and 4 will be open, allowing the effluent flow from Final Sedimentation Tank Nos. 1-12 to flow directly into the Denitrification Filters (see Figure III-FS-FST-2).

Slide Gate FT-SLG-13 allows Final Sedimentation Tank Nos. 17-20 to be isolated from Final Sedimentation Tank Nos. 13-16 (see Figure III-FS-FST-5). Slide Gate FT-SLG-13 may be normally open or normally closed depending on which mode promotes the best flow distribution to the Final Sedimentation Tanks.

(2) NORMAL OPERATION

Normal operation of the gates is OPEN, CLOSE and STOP from the operator disconnect breaker and control station at each unit. Slide gates FT-FCG-3 and 4 and FT-SLG-13 are also provided with a LOCAL-OFF-REMOTE selector switch at the operator disconnect breaker and control station at each unit. Slide gates FT-FCG-1 and 2 have circuit breakers on MCC-43 in Pumping Station No. 2. Slide gates FT-

FCG-3 and 4 have circuit breakers on MCC-45 in Pumping Station No. 3. Slide gate FT-SLG-13 has a circuit breaker on MCC-811 in Pumping Station No. 4.

(3) START-UP AND SHUTDOWN PROCEDURES

a. Start-Up

- Close circuit breaker for the selected flow control slide gate on their associated Motor Control Center
- Place the LOCAL-OFF-REMOTE selector switch at the operator disconnect breaker and control station in the LOCAL position (for FT-FCG-3 and 4 and FT-SLG-13)
- Press the OPEN or CLOSE push button at the operator disconnect breaker and control station

b. Shutdown

- Press the STOP push button at the operator disconnect breaker and control station

(4) MONITORS AND ALARMS

The flow controls slide gates FT-FCG-1 through 4 and FT-SLG-13 are each provided with OPEN and CLOSED indicating lights mounted on the local disconnect breaker and control station.

I. AIR DIFFUSER SYSTEM

Air Diffusers are provided in the influent channel of Final Sedimentation Tank Nos. 1-12, in the influent channel of Final Sedimentation Tank Nos. 13-20 and in Mixed Liquor Transfer Channel Nos. 1 and 2. The air diffusers are provided to prevent mixed liquor solids from settling in the channels by keeping them in suspension until the mixed liquor enters the Final Sedimentation Tanks.

The air diffuser system in the influent channel of Final Sedimentation Tank Nos. 1-12 consists of 2 flowmeters, designated MPA-15 and MPA-16 and twenty-four air diffuser assemblies (drop pipe and diffuser manifold) with associated butterfly valves. The air diffuser system in the influent channel of Final Sedimentation Tank Nos. 13-20 consists of twenty air diffuser assemblies with associated butterfly valves. Mixed Liquor Transfer Channel Nos. 1 and 2 have twelve and eight air diffuser assemblies and butterfly valves, respectively (see Figures III-FS-FST-1, 2, 4 and 5 and III-DA-DAR-1).

For a complete discussion of the air diffuser system equipment, operation and control, refer to the section headed "Process Air Equipment and Systems."

J. EFFLUENT WATER (SEE FIGURE III-SU-UPS-5 THROUGH 9)

The effluent water equipment in the Final Sedimentation Tanks consists of piping and fittings, shutoff valves and hose hydrants.

Effluent water is supplied to the Final Sedimentation Tanks by the General Purpose Effluent Water Pumps as described in the section headed "Filter Building and Nitrified Effluent Conduit."

The effluent water is used for washing down the Final Sedimentation Tanks and FBS spray water.

K. PLANT AIR (SEE FIGURE III-SU-UPS-1 THROUGH 3)

Plant Air from the Main Pumping Station is provided in various locations of Final Sedimentation Tank Nos. 13-20. The associated equipment in Final Sedimentation Tank Nos. 13-20 consists of piping, fittings, shutoff valves, moisture traps and hose valves.

L. POWER DISTRIBUTION SYSTEM

The power distribution system is shown in detail on the contract plans and various shop drawings. Refer to Table III-FS-FST-1, Final Sedimentation Tanks - Facility Equipment Summary for contract plan and shop drawing numbers which pertain to the power distribution system.

III-FS-SPS SLUDGE PUMPING STATION NOS. 1 (022), 2 (023), 3 (024), 4 (062) AND 5 (065)

A. GENERAL

Sludge Pumping Station Nos. 1, 2, 3, 4 and 5 are each two-level structures. Sludge Pumping Station Nos. 1, 2 and 3 are located along the north wall of Final Sedimentation Tank Nos. 1 through 12 and are associated with HPO activated sludge system. Sludge Pumping Station Nos. 4 and 5 are located along the north wall of Final Sedimentation Tank Nos. 13 through 20 and are associated with the DAR activated sludge system.

These structures contain the following equipment and systems:

- Return Sludge Pumping Equipment
- Flow Metering Equipment
- Sludge Sample Station
- Waste Sludge Pumping Equipment
- Rate Controller Equipment
- Floating Biological Solids Pumping Equipment
- Dewatering Pumping Equipment
- Sump Pump
- Effluent Water
- Plant Air
- Plant Water
- Hoisting Equipment
- Ventilation
- Power Distribution System

B. PROCESS CONTROL

(1) GENERAL

Refer to Table III-FS-SPS-1 through III-FS-SPS-5, Sludge Pumping Station Nos. 1-5 - Facility Equipment Summary, for control numbers, manufacturers, equipment capacities, and operation, maintenance, contract plan and shop drawing references for each sludge pumping station. Refer to Contractor's O & M Manual for Manufacturer's Service Manuals pertaining to return sludge pumping equipment.

(2) SLUDGE PUMPING STATION NO. 1

Sludge flows to Sludge Pumping Station No. 1 from Final Sedimentation Tank Nos. 1, 2, 3 and 4 through four 20-inch suction lines. The return sludge pumping equipment in Sludge Pumping Station No. 1 discharges into a 36-inch return sludge header (see Figure III-FS-SPS-1).

(3) SLUDGE PUMPING STATION NO. 2

Sludge flows to Sludge Pumping Station No. 2 from Final Sedimentation Tank Nos. 5, 6, 7 and 8 through four 20-inch suction lines. The return sludge pumping equipment in Sludge Pumping Station No. 2 discharges into a 36-inch return sludge header (see Figure III-FS-SPS-2).

(4) SLUDGE PUMPING STATION NO. 3

Sludge flows to Sludge Pumping Station No. 3 from Final Sedimentation Tank Nos. 9, 10, 11 and 12 through four 20-inch suction lines. The return sludge pumping equipment in Sludge Pumping Station No. 3 discharges into a 36-inch return sludge header (see Figure III-FS-SPS-3).

(5) SLUDGE PUMPING STATION NO. 4

Sludge flows to Sludge Pumping Station No. 4 from Final Sedimentation Tank Nos. 13, 14, 15 and 16 through four 20-inch suction lines. The return sludge pumping equipment in Sludge Pumping Station No. 4 discharges into a 36-inch return sludge header (see Figure III-FS-SPS-4).

(6) SLUDGE PUMPING STATION NO. 5

Sludge flows to Sludge Pumping Station No. 5 from Final Sedimentation Tank Nos. 17, 18, 19 and 20 through four 20-inch suction lines. The return sludge pumping equipment in Sludge Pumping Station No. 5 discharges into a 36-inch return sludge header (see Figure III-FS-SPS-5).

(7) ACTIVATED SLUDGE

The treatment facilities are arranged to provide two separate complete activated sludge processes: (1) Carbonaceous Stage Activated Sludge Process, provided to remove carbonaceous BOD, solids and phosphorous, and (2) Nitrification Stage Activated Sludge Process, provided to convert ammonia nitrogen to the nitrate nitrogen form. Chapter II describes the process alternatives available.

Refer to Section III-OB-OR - REACTORS and Section III-DA-DAR - DIFFUSED AIR REACTORS for text describing Process Control of the Activated Sludge Process.

C. RETURN SLUDGE PUMPING EQUIPMENT: FT-RSP-1A, 1B, 1C, 1D, 1E, 2A, 2B, 2C, 2D, 2E, 3A, 3B, 3C, 3D, 3E, 4A, 4B, 4C, 4D, 4E, 5A, 5B, 5C, 5D and 5E

(1) DESCRIPTION

The return sludge pumping equipment is provided to pump sludge collected in the Final Sedimentation Tanks to the Reactors and/or to the Sludge Treatment Building. Refer to Figures III-FS-SPS-1 through III-FS-SPS-5.

The return sludge pumping equipment consists of 25 Return Sludge Pumps, and associated variable speed drives, drive motors and controls. The pumps are located as follows:

- Return Sludge Pumps FT-RSP-1A, 1B, 1C, 1D and 1E, located in Sludge Pumping Station No. 1;
- Return Sludge Pumps FT-RSP-2A, 2B, 2C, 2D and 2E, located in Sludge Pumping Station No. 2;
- Return Sludge Pumps FT-RSP-3A, 3B, 3C, 3D and 3E, located in Sludge Pumping Station No. 3;
- Return Sludge Pumps FT-RSP-4A, 4B, 4C, 4D and 4E, located in Sludge Pumping Station No. 4; and
- Return Sludge Pumps FT-RSP-5A, 5B, 5C, 5D and 5E, located in Sludge Pumping Station No. 5.

Return Sludge Pumps FT-RSP-1A through FT-RSP-3E are single stage, end suction-vertical discharge, nonclogging, centrifugal pumps driven through infinitely variable speed drives of the eddy-current

coupling type by constant speed motors (see Figures III-FS-SPS-6 through III-FS-SPS-14). Return Sludge Pumps FT-RSP-4A through FT-RSP-5E are single stage, horizontal shaft, nonclogging, side discharge, centrifugal, mixed flow pumps, each driven by an electric motor powered by an adjustable frequency drive (see Figures III-FS-SPS-15 and III-FS-SPS-16). Refer to Table III-FS-SPS-6 for additional pump and motor information.

Table III-FS-SPS-6 SLUDGE PUMPING STATION NO. 1 THROUGH NO. 5, PUMP RATING DATA

RATING DATA	PUMPING UNITS		
	FT-RSP-1A through FT-RSP-1E	FT-RSP-2A through FT-RSP-3E	FT-RSP-4A through FT-RSP-5E
Nominal Rated Capacity	11.25 mgd	7.5 mgd	7.5 mgd
Rated Head	41 ft	36 ft	42 ft
Maximum Pump Speed	1,050 rpm	1,130 rpm	1,180 rpm
Motor Rated HP	125 HP	75 HP	75 HP
Drive	variable speed drive of the eddy current coupling type	variable speed drive of the eddy current coupling type	adjustable frequency drive

The return sludge pumps in Sludge Pumping Station Nos. 1, 2, 3, 4 and 5 are operated and controlled from Return Sludge Pump Control Centers MCC-42, MCC-44 and MCC-46, and Return Sludge Pump Control Panels ASCC-813 and ASCC-816, respectively. Each Return Sludge Pump Control Center and Panel consists of five cubicles numbered 1, 2, 3, 4 and 5, singly assigned to one return sludge pump. Each cubicle contains the following:

- The cubicles are provided with various front mounted indicators, push buttons, selector switches and like devices. Refer to the Division 4H4 (MCC-42, MCC-44 and MCC-46) and 5H4 (ASCC-813 and ASCC-816) Contractor's O & M Manual for detailed drawings of the cubicles.

- Return Sludge Control Centers MCC-42, MCC-44 and MCC-46 contain a LOCAL-REMOTE selector switch and position indicating lights in Cubicle No. 3 . This switch is provided to transfer speed control of all five return sludge pumps from the Control Center to the Process Control Console in the Process Control Room in the Main Pumping Station.

- Return Sludge Control Panels ASCC-813 and ASCC-816 contain a LOCAL-REMOTE selector switch, START, STOP and RESET push buttons, ten-turn potentiometer for speed control, adjustable frequency drive keypad controller and indicating lights in each cubicle. The LOCAL-REMOTE selector switch is provided to transfer speed control of each return sludge pump from the Control Panel to the Supervisory Control and Data Acquisition (SCADA) Monitoring System in the Main Pumping Station.

NOTES

Return sludge pumps are provided with START-STOP controls, running status indicators, speed indicators and speed control in the SCADA system for remote pump control and indication.

Each return sludge pump is provided with an ON-OFF selector switch, TEST push button, and an EMERGENCY STOP push button mounted at a convenient height near the pump.

(2) NORMAL OPERATION

a. GENERAL

The pumping arrangement to serve each Final Sedimentation Tank is as follows:

1. Final Sedimentation Tank Nos. 1, 2, 3 and 4 are served by the return sludge pumps in Sludge Pumping Station No. 1,
2. Final Sedimentation Tank Nos. 5, 6, 7 and 8 are served by the return sludge pumps in Sludge Pumping Station No. 2,
3. Final Sedimentation Tank Nos. 9, 10, 11 and 12 are served by the return sludge pumps in Sludge Pumping Station No. 3,
4. Final Sedimentation Tank Nos. 13, 14, 15 and 16 are served by the return sludge pumps in Sludge Pumping Station No. 4, and
5. Final Sedimentation Tank Nos.17, 18, 19 and 20 are served by the return sludge pumps in Sludge Pumping Station No. 5.

The suction piping from the Final Sedimentation Tanks is combined into a header with isolating valves arranged so that four return sludge pumps per Sludge Pumping Station are normally in service (one for each Final Sedimentation Tank) and the fifth pump is available as a standby unit (see Figures III-FS-SPS-1 through III-FS-SPS-5).

Each return sludge pump handles sludge from its associated Final Sedimentation Tank to the Reactors and/or the Sludge Treatment Facilities (see Figure I-IN-HD-1).

A pneumatically operated plug check valve is located in the discharge line of each return sludge pump and opens automatically when the pump discharge pressure exceeds a preset value (for detailed description of operation of pneumatically operated plug check valve, see Section III-SU-VAL VALVES).

In the High Purity Oxygen (HPO) system it is common to have Final Sedimentation Tank (FST) Nos. 1-6 associated with HPO Reactor Nos. 1-3 and FST Nos. 7-12 associated with HPO Reactor Nos. 4-6. Sludge from FST Nos. 7-12 can also be associated with HPO Reactor No. 3. An

uncommon arrangement which is also possible is to have FST Nos. 1-4 associated with HPO Reactor Nos.1 and 2 and to have FST Nos. 5-12 associated with HPO Reactor Nos. 5-12.

For the Diffused Air System, FST Nos. 13-20 are always associated with Diffused Air Reactor (DAR) Nos. 1-4.

Both common and uncommon arrangements are shown below in Table III-SPS-7. A number of figures have also been prepared showing operation under normal and out-of-service conditions.

Table III-FS-SPS-7 - RETURN SLUDGE PUMPING ARRANGEMENTS

Pump FT-RSP-	From FST's	To Reactors	Figure III-FS-SPS- Normal	Figure III-FS-SPS- Out-of-Service
COMMON ARRANGEMENT				
1A thru 2C	1-6	HPO 1-3	10	12, 13
2C thru 3E	7-12	HPO 4-6	11	14
4A thru 5E	13-20	DAR 1-4	15	16
UNCOMMON ARRANGEMENT				
1A thru 1E	1-4	HPO 1-2	6	8
2A thru 3E	5-12	HPO 3-6	7	9

b. RETURN SLUDGE PUMPING EQUIPMENT: FST-RSP-1A thru 2C

Under normal operation, Final Sedimentation Tank Nos. 1-6 are in Carbonaceous Stage Service. Four return sludge pumps in Sludge Pumping Station No. 1 are required to be operating, one in conjunction with each Final Sedimentation Tank Nos. 1- 4. Two return sludge pumps in Sludge Pumping Station No. 2 are required to be operating in Carbonaceous stage Service; one in conjunction with each Final Sedimentation Tank Nos. 5 and 6. The manually operated isolating valves in the Return Sludge Transfer Header in Sludge Pumping Station No. 2 (see Figure III-FS-SPS-2) must be positioned as follows:

Valve Number	Open	Closed
RS-264	x	
RS-265		x
RS-266		x

Valve Number RS-265 may be open if standby pump FT-RSP-2C is required.

To obtain a particular return sludge pumping rate from the Carbonaceous Stage Final Sedimentation Tanks (Nos. 1, 2, 3, 4, 5 and 6) to the Carbonaceous Stage Reactors (Nos. 1, 2 and 3), refer to Figure III-FS-SPS-10. For example, note that for 30 mgd, the total theoretical pumping head is between 18 and 20 feet and that each of the four pumps in Sludge Pumping Station No. 1 should

be operating at approximately 600 rpm and both pumps in Sludge Pumping Station No. 2 should be operating at 760 rpm. After the return sludge pumps have been started as described in the subsection headed "Start-up Procedures", adjust each pump speed as described above. Check the return sludge flow rate on the local Flow Indicating Transmitter for Flowmeter MS-2 or on Indicator-Recorder G-44, Flow-Return Sludge Carbonaceous Reactors (see Figure III-FS-SPS-17), and adjust each pumps speed until the desired flow rate, 30 mgd in this example, is obtained.

Periodically, during each day, sludge blanket levels need to be determined manually for each tank. A significant rise or fall in the sludge blanket level of one Final Sedimentation Tank may indicate that the return sludge pump associated with that tank is not pumping at the anticipated rate or influent to each Final Sedimentation Tank is not even distributed. The speed of each return sludge pump will need to be adjusted so that the desired rate of return sludge is maintained and the sludge blanket level in each Final Sedimentation Tank remains relatively uniform.

c. RETURN SLUDGE PUMPING EQUIPMENT: FT-RSP- 2C through 3E

Under normal operation, Final Sedimentation Tank Nos. 7-12 are in Nitrification or Carbonaceous Stage Service. Two return sludge pumps in Sludge Pumping Station No. 2 are required to be in operation, one in conjunction with each Final Sedimentation Tank Nos. 7 and 8. Four return sludge pumps in Sludge Pumping Station No. 3 are required to be operating, one in conjunction with each Final Sedimentation Tank Nos. 9 thru 12. The manually operated isolating valves in the Return Sludge Transfer Header in Sludge Pumping Station No. 2 (see Figure III-FS-SPS-2) must be positioned as follows:

Valve Number	Open	Closed
RS-265		x
RS-266		x
RS-267	x	

Valve Number RS-266 may be open if standby pump FT-RSP-2C is required.

To obtain a particular return sludge pumping rate from the Nitrification Stage Final Sedimentation Tanks (Nos. 7 thru 12) to the Nitrification Stage Reactors (Nos. 4 thru 6), refer to Figure III-FS-SPS-11. For example note that for 30 mgd, the total theoretical pumping head is between 19 and 21 feet and that each pump should be operating at approximately 780 rpm. After the return sludge pumps have been started as described in the subsection headed "Start-up Procedures", adjust each pumps speed to 780 rpm. Check the return sludge flow rate on the local Flow Indicator Transmitter for Flowmeter MS-3 or on Indicator-Recorder G-45, Flow-Return Sludge Carbonaceous Reactors (see Figure III-FS-SPS-17), and adjust each pumps speed equally until the desired flow rate, 30 mgd in this example, is obtained.

When each of the six return sludge pumps is operating at exactly the same speed, each pump will be pumping approximately 1/8th percent of the total return sludge. However, as previously

discussed above, each pump will not be pumping at exactly the same rate and each pumps speed is required to be adjusted as previously described.

d. RETURN SLUDGE PUMPING EQUIPMENT: FT-RSP-4A through 5E

Under normal operation when Final Sedimentation Tank Nos. 13-20 are in service, four return sludge pumps in Sludge Pumping Station No. 4 and four return sludge pumps in Sludge Pumping Station No. 5 are required to be operating. Each of the eight return sludge pumps must be operating at approximately the same speed.

To obtain a particular return sludge pumping rate from Final Sedimentation Tank Nos. 13-20 to the Diffused Air Reactors (Nos. 1, 2, 3 and 4), refer to Figure III-FS-SPS-15. For example note that for 35 mgd the total theoretical pumping head is approximately 17 feet and that each pump should be operating at approximately 725 rpm. After the return sludge pumps have been started as described below, adjust each pump speed to 725 rpm. Check the total return sludge flow rate on the Blower Building Control Panel, for Total Sludge Flow Indicator FI-323, and adjust each pump speed equally until the desired flow rate, 35 mgd in this example, is obtained. Refer to III-DA-DAR DIFFUSED AIR REACTORS for text describing the Return Sludge Controller Equipment.

When each of the eight return sludge pumps is operating at exactly the same speed, each pump will be pumping approximately 12.5 percent of the total return sludge. However, the pumping rates will not be exactly the same, because the pumps are not equi-distant from the discharge point. The Theoretical Return Sludge Pumping Station Nos. 4 and 5 System Head Curves shown on Figure III-FS-SPS-15 represent pumping losses on the longest pump discharge route (i.e. from Return Sludge Pump FT-RSP-4A to the Reactors). Therefore, for a given pump speed, the pump closest to the discharge point will pump at a slightly greater rate than the next closest pump and so forth. Since the influent to each Final Sedimentation Tank is assumed to have uniform solids content and removal efficiency is assumed to be constant, the sludge blanket level in each tank should be at the same elevation if each return sludge pump is pumping at approximately the same rate.

A significant rise in the sludge blanket level of one Final Sedimentation Tank may indicate that the return sludge pump associated with that tank is not pumping at the anticipated rate. The speed of each return sludge pump is required to be adjusted so that the desired rate of return sludge is maintained and the sludge blanket level in each Final Sedimentation Tank remains at the same elevation.

(3) START-UP PROCEDURES

a. RETURN SLUDGE PUMPING EQUIPMENT: FST-SP-1A THROUGH FST-SP-3E

To start-up and shutdown the return sludge pumping equipment in Sludge Pumping Station No. 1, 2 and 3, use the following procedure:

1. Make sure the plant air system is operating and open the valves required to supply air to the pneumatically-operated pump discharge plug check valves

2. Make sure the effluent water system is operating and open the valves required to supply seal water to the pumps and purge water to the pump discharge pressure switch diaphragm seals

3. Refer to Figure III-FS-SPS-1, 2 and 3 and open manually operated suction valves to the return sludge pumps to be started and close manually operated isolating valves required to associate one Final Sedimentation Tank with one return sludge pump. Position manually operated isolating valves in the Return Sludge Transfer Headers as shown in Table III-FS-SPS-7

TABLE III-FS-SPS-7 START-UP VALVES POSITION

LOCATION	VALVE NO.	POSITION	
		OPEN	CLOSED
SLUDGE PUMPING STATION NO. 1	RS-244	X	
SLUDGE PUMPING STATION NO. 2	RS-264		X
	RS-265	X	
	RS-266	X	
	RS-267	X	
SLUDGE PUMPING STATION NO. 3	RS-296	X	

(a) Close the circuit breakers in the associated Motor Control Center (MCC-41, MCC-43 and/or MCC-45) for each return sludge pump to be started

(b) Hold the momentary contact RAISE-OFF-LOWER switch, for each return sludge pump to be started, in the RAISE position for 10 seconds to insure that the eddy-current coupling manual speed adjustment rheostat is in the full speed position

(c) On Control Cubicle No. 3 in the associated (MCC-42, MCC-44 and/or MCC-46), place the LOCAL-REMOTE selector switch in the LOCAL position

(d) Depress the reset push buttons on the associated control cubicles for the return sludge pumps to be started

(e) Depress the START push button on the associated control cubicles for the return sludge pumps to be started

NOTE

After the return sludge pumps have been started, make preliminary pump speed adjustments on the associated motor control center, then move the

LOCAL-REMOTE selector switch to the remote position.

b. RETURN SLUDGE PUMPING EQUIPMENT: FST-SP-4A THROUGH FST-SP-5E
To start-up the return sludge pumping equipment in Sludge Pumping Station Nos. 4-5 use the following procedures:

1. Make sure the plant air system is operating and open the valves required to supply air to the pneumatically-operated pump discharge plug check valves

2. Make sure the effluent water system is operating and open the valves required to supply seal water to the pumps and purge water to the pump discharge pressure switch diaphragm seals

3. Refer to Figure III-FS-SPS-4 and 5 and open manually operated suction valves to the return sludge pumps to be started and close manually operated isolating valves required to associate one Final Sedimentation Tank with one return sludge pump

4. Close the circuit breaker at the associated pump control cubicle in Return Sludge Pump Control Panel ASCC-813 or ASCC-816 for the return sludge pump to be started

5. Place the LOCAL-REMOTE selector switch at the associated pump control cubicle in Return Sludge Pump Control Panel ASCC-813 or ASCC-816 in the LOCAL position

6. Depress the START push button at the associated pump control cubicle in Return Sludge Pump Control Panel ASCC-813 or ASCC-816 for the return sludge pumps to be started

NOTE

After the return sludge pumps have been started, make preliminary pump speed adjustments on the associated Return Sludge Pump Control Panel, then move the LOCAL-REMOTE selector switch to the REMOTE position for SCADA control.

(4) SHUTDOWN PROCEDURE
To shutdown the return sludge pumping equipment in Sludge Pumping Station Nos. 1-5 use the following procedures:
NORMAL SHUTDOWN

a. Depress the STOP push button on the associated Control Center or Panel for the return sludge pump to be stopped

NOTE

Under normal shut down, the return sludge pump will continue to operate after the STOP push button is depressed until the pneumatically-operated discharge plug check valve is completely closed through the normal closure sequence as described in Section III-SU-VAL VALVES.

If maintenance is to be performed on the return sludge pump, and the associated Final Sedimentation Tank is to remain in service, open the associated circuit breaker and depress the STOP push button at the pump and engage the locking device. Refer to Figures III-FS-SPS-1 through III-FS-SPS-5 and revise the position of the manually operated suction valves as required to isolate the pump to be maintained, and to place the standby pump in service. Start the standby pump as described above. Follow approved **Lockout/Tagout** procedures (See Chapter VI, Safety).

If the associated Final Sedimentation Tanks is to be dewatered and taken out of service refer to Section III-FS-FST FINAL SEDIMENTATION TANKS.

b. EMERGENCY SHUTDOWN

1. Depress the EMERGENCY STOP push button either at the pump or on the associated motor control cubicle for the return sludge pump to be stopped

NOTE

Under emergency shutdown, the sludge pump will stop immediately and the pneumatically-operated discharge plug check valve will close rapidly through the emergency closure sequence as described in Section III-SU-VAL VALVES.

(5) MONITORS AND ALARMS

Each return sludge pump in Sludge Pumping Station Nos. 1-3 is provided with ON-OFF status indicating lights, a speed indicator and an elapsed time meter on the pertinent Return Sludge Pump Control Center

or Panel (refer to Table III-FS-SPS-8). Each return sludge pump in Sludge Pumping Station Nos. 4 and 5 is provided with RUNNING, VFD OFF and LOR TRIPPED indicating lights and a speed indicator on its associated adjustable frequency drive keypad controller on the pertinent Return Sludge Pump Control Center or Panel (refer to Table III-FS-SPS-8). Duplicate indication and control are provided in the supervisory control and data acquisition (SCADA) monitoring system. Each return sludge pump in Sludge Pumping Station Nos. 4 and 5 is provided with RUN and OFF status indicating lights and a speed indicator on the Blower Building Control Panel.

III-FS-SPS-8 EQUIPMENT MONITORS

SLUDGE PUMPING EQUIPMENT	SLUDGE RETURN PUMP CONTROL CENTER/PANEL
FS-RSP-1A, 1B, 1C, 1D and 1E	MCC-42
FS-RSP-2A, 2B, 2C, 2D and 2E	MCC-44
FS-RSP-3A, 3B, 3C, 3D and 3E	MCC-46
FS-RSP-4A, 4B, 4C, 4D and 4E	ASCC-813
FS-RSP-5A, 5B, 5C, 5D and 5E	ASCC-816

Annunciator panels on each return sludge pump control cubicle, for Return Sludge Control Centers MCC-42, 44 and 46, contain audible and visual indication for Lock Out Relay Trip, Seal Water Low Pressure and Low Load Trip alarms. Annunciator Panel Nos. 4 and 5, located in Pumping Station Nos. 4 and 5, respectively, contain audible and visual indication for Pump Failure, High Winding Temperature, High Vibration and Seal Water Failure alarms. Each of these alarm conditions will automatically shutdown the associated return sludge pump according to the procedure described for "Emergency Shutdown".

The contacts which are provided in MCC-42, 44 and 46 to initiate the Lock Out Relay Trip alarm are as follows:

- Motor Overload Relays
- Phase Failure Phase Reversal Relay
- Ground Sensing Relay
- Winding Temperature Relay
- Excess Vibration Relay - Pump
- Excess Vibration Relay - Eddy-Current Coupling
- Excess Vibration Relay - Motor
- Air Temperature Relay - Eddy-Current Coupling

The contacts which are provided in ASCC-13 and 16 to initiate the Pump Failure alarm are as follows:

- AFD Failure Relay
- High Winding Temperature Relay
- High Vibration Relay

- Seal Water Failure Relay

The contact provided to initiate lock out sequence due to low seal water pressure is a pressure switch. The circuit includes a time delay relay to permit time for the seal water solenoid valve to open on start-up and to prevent nuisance pump shutdown because of momentary fluctuations in seal water pressure.

Scanner-Transmitters on each Motor Control Centers MCC-41, 43 and 45 continuously scans and transmits the condition of all alarm points in Sludge Pumping Station Nos. 1, 2 and 3 to the scanner-receiver alarm panel in the Process Control Room in the Main Pumping Station. The Scanner-Transmitters initiate a common alarm to the annunciator on the scanner-receiver alarm panel in the Process Control Room upon receipt of an alarm signal only indicating that an alarm condition in the associated Sludge Pumping Station has occurred. The scanner-receiver alarm panel will also transmit the condition of all alarm points to the SCADA System. The monitoring signals in Annunciator Panel Nos. 4 and 5 are fed to the Remote Transmission Units (RTU) located in Sludge Pumping Station Nos. 4 and 5, where they can be accessed through the SCADA system.

D. FLOW METERING EQUIPMENT: MS-2 and MS-3

(1) DESCRIPTION

The venturi meter equipment, located in the Return Sludge Transfer Header (Sludge Pumping Station No.2), is provided to measure, indicate and record the return sludge flow rate to the HPO Reactors.

The Venturi Meter equipment consists of two Venturi Meters designated MS-2 and MS-3, two indicating electronic transmitters (one serving each venturi meter and mounted locally) and two indicator-recorders, designated G-44 and G-45 located on the Process Monitoring and Terminal Cabinet (PMTC) in the Main Pumping Station (see Figure III-FS-SPS-17).

Meters MS-2 and MS-3 are modified type, cast-iron, 42-inch venturi tubes with a flow range of 6 to 60 mgd. The two local indicating electronic transmitters and the two Indicator-Recorders G-44 and G-45 located on the Process Monitoring and Terminal Cabinet (PMTC) in the Main Pumping Station (see Figure III-FS-SPS-17).

(2) NORMAL OPERATION

Venturi Meter MS-2 measure, indicates and records the rate of return sludge to HPO Reactor Nos. 1-3 (Carbonaceous Stage). Venturi Meter MS-3 measures, indicates and records the rate of return sludge to HPO Reactor Nos. 4-6 (Nitrification Stage).

(3) MONITORS

The output signals from the indicating electronic transmitters for Venturi Meters MS-2 and MS-3 are the input signals to Indicator-Recorders G-44 and G-45, respectively, (located on the PMTC) and are also sent to the SCADA system.

E. SLUDGE SAMPLE STATION

(1) DESCRIPTION

A sludge sample station is provided at each Sludge Pumping Station to allow convenient grab sampling of sludge. Each sample station consists of a sample sink, individual sample lines from each sludge suction line and a plant water supply for back flushing and clean up.

(2) NORMAL OPERATION

The normal procedure for obtaining a sample of sludge is as follows (refer to Figure III-FS-SPS-18):

- Open the ball valves on the 1-1/2 inch sample line, both at the 20-inch sludge suction and at the sample sink, for the Final Sedimentation Tank from which a sludge sample is required

- Open the rapid action globe valve at the sample sink and allow sludge to flow for at least 30 seconds before a sample is taken

- After the sample is obtained, open the ball valve on the 1-1/2 inch plant water line and back flush the sample line for at least 30 seconds. Close the ball valves on the sample line and the plant water line

- Wash down the sample sink with the 3/4-inch plant water line

F. WASTE SLUDGE PUMPING EQUIPMENT: FT-WSP-1, 2, and 3

(1) DESCRIPTION

The waste sludge pumping equipment is provided to pump sludge collected in the Final Sedimentation Tanks to the sludge thickening facilities. This equipment is located in Sludge Pumping Station No. 2 and the Sludge Treatment Building. The waste sludge pumps located in Sludge Pumping Station No. 2 take from Final Sedimentation Tank Nos. 1-12 , and the waste sludge pumps located in the Sludge Treatment Building take from Final Sedimentation Tank Nos. 13-20. Refer to Section III-ST-STB SLUDGE TREATMENT BUILDING & GRAVITY THICKENERS for additional information on the pumps for Tank Nos. 13-20.

The waste sludge pumping equipment located in Sludge Pumping Station No.2 consists of three waste sludge pumps, designated FT-WSP-1, 2, and 3, associated adjustable frequency drives, drive motors, and controls.

The Waste Sludge Pumps are single stage, horizontal shaft, nonclog, side discharge, centrifugal, mixed flow type, each driven through adjustable frequency drives by 50 hp totally enclosed fan cooled motors. Each waste sludge pump has a rated capacity of 1740 gpm at a rated head of 65 feet and at pump speed of approximately 1185 rpm (see Figure III-FS-SPS-16).

The Waste Sludge Pumps are operated and controlled from the Waste Sludge Control Panel and MCC-43A. The Waste Sludge Control Panel consists of a single panel mounted at the end of MCC-43A. MCC-43A consists of three cubicles, each an adjustable frequency drive, designated FT-WSP 1, 2, and 3,

respectively. Each MCC-43A cubicle contains various front mounted indicators, push buttons, selector switches and like devices. (Refer to Section 22 of the Division 4H23 Contractor's O&M Manual for detailed drawings of the cubicles.)

(2) NORMAL OPERATION

Waste sludge from the Final Sedimentation Tank Nos. 1 - 12 is transported to the sludge thickening facilities by the two 10-inch waste sludge pipelines from Sludge Pumping Station No. 2 (see Figure III-FS-SPS-2). A portion of the return sludge from Final Sedimentation Tank Nos. 1-12 is wasted (removed) during normal plant operation. Suction for the waste sludge pumps is taken from each of the two return sludge pipelines shown in Figure III-FS-SPS-2. FT-WSP-2 will normally draw suction from the return sludge of Final Sedimentation Tank Nos. 1-6, while FT-WSP-3 will draw suction from the return sludge of Final Sedimentation Tank Nos. 7-12. FT-WSP-1 will serve as a standby pump for either FT-WSP-2 or FT-WSP-3.

A pneumatically-operated plug check valve is located in the discharge line of each waste sludge pump and opens automatically when the pump discharge pressure exceeds a preset value above the downstream system pressure (for a detailed description of operation of pneumatically-operated plug check valves, see Section III-SU-VAL - VALVES).

NOTE

Since the return sludge pipelines are always under pressure, the waste sludge pump suction pipelines will also be under pressure.

Under normal operation, sludge will be wasted from Final Sedimentation Tank Nos. 1-12 by operation of the waste sludge pumps located in Sludge Pumping Station No.2. Based on routine tests of MLSS concentrations, a desired or target waste sludge flow rate will be determined. The appropriate pump to service each of the two 10-inch waste sludge pipelines will be selected via the waste sludge pump interlock controls located in the Waste Sludge Control Panel. The desired flow rate for each of the two 10-inch waste sludge pipelines will be selected at the Process Monitoring and Terminal Cabinet (PMTC) in the Main Pumping Station. This target waste sludge flow rate will ultimately cause the selected pump to speed up or slow down based on the relation of the measured flow value from meter FE-121 (MRC-13) or FE-122 (MRC-14) (see Figures III-FS-SPS-2, III-FS-SPS-18 and III-FS-SPS-19) to that of the target flow value.

(3) START-UP AND SHUTDOWN PROCEDURES

To start up and shutdown the waste sludge pumping equipment, use the following procedures:

a. Start-up

1. Check that the plant air system is operating and open the valves required to supply air to the pneumatically-operated pump discharge plug check valves

2. Check that the effluent water system is operating and open the valves required to supply seal water to the pumps and purge water to the pump discharge pressure switch diaphragm seals

3. Open manually operated suction valves to the waste sludge pump to be started (Figure III-FS-SPS-2) and close the manually operated isolating valves required to associate one waste sludge pump with each 10-inch waste sludge pipeline. Make sure that the manually operated isolating valves in the suction and discharge headers are properly positioned in order to route the waste sludge flow through the desired pipelines and instrumentation

4. Check that the appropriate 125A circuit breakers in MCC-43 and MCC-43A are closed so that the selected pump can be energized

5. Place the LOCAL/REMOTE selector switch on the MCC panel for the selected pump in the REMOTE position allowing waste sludge speed control to take place via the Flow Indicating Controller at the PMTC in the Main Pumping Station

6. Select the desired pump at the Waste Sludge Control Panel

7. Verify the ON/OFF switch at the selected pump and its respective MCC-43A cubicle is in the ON position

8. Start the associated waste sludge pump either at the pump or at MCC-43A

9. Set the target waste sludge flow with the appropriate Flow Indicating Controller at the PMTC in the Main Pumping Station

b. Normal Shutdown

1. Depress the STOP push button on the associated control cubicle in MCC-43A for the waste sludge pump to be stopped

NOTE

Under normal shut down, the waste sludge pump will continue to operate after the STOP push button is depressed until the pneumatically-operated discharge plug check valve is completely closed through the normal closure sequence as described in Section III-SU-VAL VALVES.

If maintenance is to be performed on the waste sludge pump, and pumping of waste sludge with

the other pump is desired, place the ON/OFF switch at the pump in the OFF position, and engage the associated locking device. Next, open the associated circuit breakers for the pump at MCC-43 and MCC-43A. At MCC-43A, engage the locking device for the appropriate circuit breaker to the pump under maintenance. Refer to Figure III-SPS-2 and open or close the manually operated suction and discharge valves as required to isolate the pump to be maintained, and to place the standby pump in service. Start the standby pump as described above. Follow approved **Lockout/Tagout** procedures (See Chapter VI, Safety).

c. Emergency Shutdown

Depress the EMERGENCY STOP push button at the pump for the waste sludge pump to be stopped.

NOTE

Under emergency shut down, the waste sludge pump will stop immediately and the pneumatically-operated discharge plug check valve will close rapidly through the emergency closure sequence as described in Section III-SU-VAL VALVES.

(4) ALTERNATE OPERATION

Alternate operation of the waste sludge pumps is as follows:

a. Alternate Operation A

Speed control of the waste sludge pumps can be accomplished manually from within Sludge Pumping Station No. 2 instead of automatically from the PMTC as described under the above Normal Operation section for these pumps. The MCC cubicles for each of these pumps (at MCC-43A) are equipped with manual potentiometers for speed control of the pumps. From Figure III-FS-SPS-16, a theoretical speed can be associated with the desired waste sludge flow rate from a particular pump based on the particular operating conditions.

To operate a waste sludge pump in the Alternate Operation A configuration, start up will essentially be the same as outlined for Normal Operation with the following exceptions:

1. Instead of selecting REMOTE on the MCC LOCAL/REMOTE selector switch, select LOCAL

2. After starting the selected pump as outlined in the Normal Operation section, adjust the pumping rate to the desired flow with the selected pump's speed potentiometer. A meter indicating percent of maximum motor speed is provided at the MCC and sludge flow rate is indicated on the meter itself, and at the PMTC

   Normal and emergency shut down of the pump under Alternate Operation A is identical to that outlined under Normal Operation.

b. Alternate Operation B

Since waste sludge is drawn directly off the two pressurized return sludge pipelines, a certain amount of sludge can be wasted without the need for pumping. In this alternate operating mode, the return sludge pumps provide the necessary energy to transport waste sludge to the sludge thickening facilities. Control of the waste sludge flow rate for Alternate Operation B is by the same Flow Indicating Controller at the PMTC that was described in the Normal Operation section. Under Alternate Operation B, however, the relation of the measured flow from Flow Meter FE-121 (MRC-13) or FE-122 (MRC-14) to the appropriate Flow Indicating Controller target value, causes the modulation of the Flow Control Valve (FCV-121 or FCV-122) directly downstream of the appropriate flow meter.

This mode of operation is appropriate until the waste sludge flow rate desired is above that obtainable by the pressure head in the return sludge pipelines alone. When the flow meter indicates that the Flow Indicating Controller is not able to allow an adequate amount of waste sludge to the sludge treatment facilities, pumping must be started.

To initiate Alternate Operation B, the following sequence is required:

1. Make sure that the manually operated isolating valves in the suction and discharge headers are properly positioned in order to route the waste sludge flow through the desired pipelines and instrumentation

   NOTE

   It is not necessary to isolate the waste sludge pumps for this mode of operation since each are equipped with automatic control plug check valves that are closed when the pump is off.

2. Select NO PUMP at the Waste Sludge Control Panel for the waste sludge line to be utilized

3. Adjust the flow rate to a desired value with the appropriate Flow Indicating Controller at the PMTC

c. Alternate Operation C

Alternate Operation C is a modification of Alternate Operation B. Since Flow Control Valves FCV-121 and FCV-122 can be operated manually, it is possible to waste sludge in a NO PUMP scenario by manually modulating the Flow Control Valves rather than by automatic control from a Flow Indicating Controller at the PMTC.

d. Alternate Operation D

Since Reactor Nos. 4-6 and Final Sedimentation Tank Nos. 7-12 can be operated routinely in the nitrification mode, Alternate Operation D provides an option specifically for this purpose. Nitrification waste sludge can be difficult to thicken. Therefore, instead of wasting nitrification sludge to the sludge treatment facilities, nitrification sludge can be wasted directly to the plant's Main Drain for recycling to the head of the carbonaceous stage. The procedure for Alternate Operation D is identical to that described under Alternate Operation B, except Flow Control Valve FCV-123, Flow Meter FE-123 (MRC-25), and Flow Indicating Controller FIC-123 are the components necessary for this mode of operation (see Figures III-FS-SPS-18 and III-FS-SPS-19).

(5) MONITORS AND ALARMS

Each waste sludge pump is provided with RUNNING and OFF status indicating lights, LOCK OUT TRIPPED light, and an elapsed time meter on MCC-43A. In addition, each adjustable frequency drive is equipped with various monitors and alarms integral to each assembly. Refer to Section 16 of the Division 4H23 Contractor's O&M Manual for a detailed description of the AFD features.

Various status indication signals for each waste sludge pump are also available for monitoring via the SCADA system. These monitoring signals include PUMP FAIL, PUMP OFF, and PUMP RUNNING indication. The monitoring signals are fed to the Remote Transmission Unit (RTU) located in Sludge Pumping Station No. 2 where they can be accessed through the SCADA system.

Each waste sludge pump MCC panel controls in MCC-43A contains visual indication for "Lock Out Relay Trip". This alarm condition will automatically shut down the associated waste sludge pump according to the procedure described above for "Emergency Shutdown".

The contacts which are provided to initiate the Lock Out Relay Trip Condition are as follows:

- AFD Failure Relay
- Seal water Failure Relay

For a list of features that would initiate the AFD failure relay, refer to Section 16 of Division 4H23 Contractor's O&M Manual.

The contact provided to initiate lock out sequence due to low seal water pressure is a pressure switch. The circuit includes a time delay relay to permit time for the seal water solenoid valve to open on start-up and to prevent nuisance pump shutdown because of momentary fluctuations in seal water pressure.

G. RATE CONTROLLER EQUIPMENT

(1) DESCRIPTION

The rate controller equipment, located in Sludge Pumping Station No. 2, is provided to automatically control the waste sludge flow rate to the sludge thickening treatment facilities.

The major components of the rate controller equipment (designated MRC-13, 14, and 25) are as follows:

- 3 - Magnetic flowmeters (FE-121, 122, AND 123);
- 3 - Electric motor-operated butterfly valves (FCV-121,122, and 123);
- 3 - Electronic flowmeter transmitters;
- 3 - Flow indicating recorders (FIR-121,122, and 123); and
- 3 - Flow indicating controllers (FIC-121, 122, and 123)

MRC-13 and MRC-14 will be utilized for wasting carbonaceous and nitrification sludge to the plant sludge thickening facilities, while MRC-25 will be used for wasting nitrification sludge to the plant Main Drain.

NOTE

For detailed descriptions and features of the individual components of MRC-13, 14, and 25, refer to Section 17 of the Division 4H23 contractor's O&M Manual.

(2) NORMAL OPERATION

Rate Controllers MRC-13, 14, and 25 are provided to control, measure, indicate, and record the rate of waste sludge from the carbonaceous and nitrification stages of treatment, respectively. For normal operation of this equipment, refer to the subsection headed "Waste Sludge Pumping Equipment".

H. FLOATING BIOLOGICAL SOLIDS PUMPING EQUIPMENT: FT-FSP-1 and FT-FSP-2

(1) DESCRIPTION

The Floating Biological Solids (FBS) pumping equipment located at Sludge Pumping Station No. 5 is provided to pump scum and floating biological solids, removed from the influent channel and the Final Sedimentation Tanks, from the FBS wet well to the FBS Thickening Facility and/or Primary Sedimentation Tank Nos. 1, 2, 5 and 6.

The FBS pumping equipment consists of two pumps and associated drive units, designated FT-FSP-1 and FT-FSP-2, a bubbler type Liquid Level Sensing Transmitter, and level controls.

The FBS pumps are operated and controlled from Motor Control MCC-815 and the Blower Building Control Panel (BBCP). Refer to the Division 5H4 Contractor's O & M Manual for detailed drawings.

The FBS pumps are single stage, vertical shaft, non clogging, bottom suction, side discharge, centrifugal type, solids handling, submersible sewage pumps each driven by a vertical constant speed 12 hp motor.

Each pump has a rated capacity of 1000 gpm at a rated head of 30 feet and at a pump speed of approximately 1180 rpm (see Figure III-FS-SPS-20).

The bubbler type liquid level transmitter, installed in the FBS wet well, transmits the liquid level in the wet well to the Bubbler Panel.

(2) NORMAL OPERATION

Normally a single FBS pump will be in operation at a time, the other pump is provided as a standby unit. Each FBS pump is provided with a START push button and an ON-OFF selector switch at each unit. Each pump is provided with a HAND-OFF-AUTO selector switch in Motor Control Center MCC-815. A PUMP 1-PUMP 2 duty transfer switch is also provided on the pump controller at MCC-815.

Under normal operation, when the HAND-OFF-AUTO selector switch for each pump on Motor Control Center MCC-815 is in the AUTO position and either PUMP 1 or PUMP 2 is selected as the lead operating pump through the duty transfer switch, the selected pump (FT-FSP-1 and FT-FSP-2) will start up at a preset high liquid level and will shut down at a preset low liquid level. In automatic control, the pump control will automatically start and stop to maintain a relatively constant liquid level in the wet well.

(3) START-UP AND SHUT-DOWN PROCEDURES

To start and shut down the sump pumps, use the following procedures:

a. START-UP

1. Open the manually operated valve in the discharge line of each pump
2. Place the ON-OFF selector switch at each unit in the ON position
3. Close the circuit breaker on MCC-815 for each pump
4. Place the HAND-OFF-AUTO selector switch for each pump in the AUTO position
5. Turn the duty transfer switch to the desired pump position
6. The pump will start when the wet well level rises above the set point

b. SHUTDOWN

1. Place the associated HAND-OFF-AUTO selector switch at MCC-815 in the OFF position or place the ON-OFF selector switch at the unit in the OFF position

(4) ALTERNATE OPERATION

Each sump pump may be operated manually when the HAND-OFF-AUTO selector switch at MCC-815 is the HAND position. When the HAND-OFF-AUTO selector switch is in the HAND position, the pump will run continuously once the START push button at the unit is depressed.

NOTE

If maintenance is to be performed on a pump, open the circuit breaker on MCC-815, place the ON-OFF selector switch at the unit in the OFF position and engage the locking device. Follow

approved **Lockout/Tagout** procedures (See Chapter VI, Safety).

(5) MONITORS AND ALARMS

FBS wet well level indication is provided on the Bubbler Panel. Pump Failure alarms are relayed to Annunciator Panel No. 5 located at Sludge Pumping Station No. 5. Pump Failure alarms will be relayed to the SCADA System.

Operational indicating lights are provided on MCC-815 and on the Blower Building Control Panel. The pumps running status is also displayed in the SCADA system.

An elapsed time meter is provided for each pump on MCC-815.

I. DEWATERING PUMPING EQUIPMENT: FT-DP-1 and FT-DP-2

(1) DESCRIPTION

The dewatering pumping equipment, located in Sludge Pumping Station No. 5, is provided to completely dewater Final Sedimentation Tank Nos. 13-20, Diffused Air Reactors Nos. 1-4, the Weir Structure, and the Mixed Liquor Transfer Channels. The dewatering pumping equipment pumps wastewater from the dewatering wet well located at Sludge Pumping Station No. 5 to Junction Chamber No. 5 and/or to the wet well in the effluent channel of Primary Sedimentation Tank Nos. 5-8.

The dewatering pumping equipment consists of two pumps and associated drive units, designated FT-DP-1 and FT-DP-2, a bubbler type Liquid Level Sensing Transmitter, and level controls.

The dewatering pumps are operated and controlled from Motor Control MCC-814 and the Blower Building Control Panel (BBCP). Refer to the Division 5H4 Contractor's O & M Manual for detailed drawings.

The dewatering pumps are single stage, vertical shaft, non clogging, bottom suction, side discharge, centrifugal type, solids handling, submersible sewage pumps each driven by a vertical constant speed 60 hp motor. Each pump has a rated capacity of 4150 gpm at a rated head of 42 feet and at a pump speed of approximately 1180 rpm (see Figure III-FS-SPS-21).

The bubbler type liquid level transmitter, installed in the dewatering wet well, transmit the liquid level in the wet well to the Bubbler Panel.

(2) NORMAL OPERATION

Normally a single dewatering pump will be in operation at a time, the other pump is provided as a standby unit. Each dewatering pump is provided with a START push button and an ON-OFF selector switch at each unit. Each pump is provided with a HAND-OFF-AUTO selector switch in Motor Control Center MCC-814. A PUMP 1-PUMP 2 duty transfer switch is also provided on the pump controller at MCC-814.

Under normal operation, when the HAND-OFF-AUTO selector switch for each pump on Motor Control Center MCC-814 is in the AUTO position and either PUMP 1 or pump 2 is selected as the lead operating pump through the duty transfer switch, the selected pump (FT-DP-1 and FT-DP-2) will start up at a preset high liquid level and will shut down at a preset low liquid level. In automatic control, the pump control will automatically start and stop to maintain a relatively constant liquid level in the wet well.

(3) START-UP AND SHUT-DOWN PROCEDURES

To start and shut down the sump pumps, use the following procedures:

a. START-UP

1. Open the manually operated valve in the discharge line of each pump
2. Place the ON-OFF selector switch at each unit in the ON position
3. Close the circuit breaker on MCC-814 for each pump
4. Place the HAND-OFF-AUTO selector switch for each pump in the AUTO position
5. Turn the duty transfer switch to the desired pump position
6. The pump will start when the wet well level rises above the set point

b. SHUTDOWN

1. Place the associated HAND-OFF-AUTO selector switch at MCC-814 in the OFF position or place the ON-OFF selector switch at the unit in the OFF position

(4) ALTERNATE OPERATION

Each sump pump may be operated manually when the HAND-OFF-AUTO selector switch is the HAND position. When the HAND-OFF-AUTO selector switch is in the HAND position, the pump will run continuously once the START push button at the unit is depressed.

NOTE

If maintenance is to be performed on a pump, open the circuit breaker on MCC-814, place the ON-OFF selector switch in the OFF position and engage the locking device. Follow approved **Lockout/Tagout** procedures (See Chapter VI, Safety).

(5) MONITORS AND ALARMS

FBS wet well level indication is provided on the Bubbler Panel. Pump Failure alarms are relayed to Annunciator Panel No. 5 located at Sludge Pumping Station No. 5. Pump Failure alarms will be relayed to the SCADA System.

Operational indicating lights are provided on MCC-814 and on the Blower Building Control Panel. The pumps running status is also displayed in the SCADA system.

An elapsed time meter is provided for each pump on MCC-814.

J. SUMP PUMPING EQUIPMENT

(1) DESCRIPTION

The sump pumping equipment for Sludge Pumping Station Nos. 1-5 consists of five sump pumps. This equipment is provided to automatically pump the liquid which flows to the associated sumps from floor and equipment drains into the sewage treatment process.

The sump pumping equipment is provided as follows:

- Sump Pump FT-SP-1, located in Sludge Pumping Station No. 1,
- Sump Pump FT-SP-2, located in Sludge Pumping Station No. 2,
- Sump Pump FT-SP-3, located in Sludge Pumping Station No. 3,
- Sump Pump FT-SP-4, located in Sludge Pumping Station No. 4, and
- Sump Pump FT-SP-5, located in Sludge Pumping Station No. 5.

The sump pumps are single stage, vertical, non-clogging, screenless, bottom suction, side discharge, centrifugal type solids handling wet pit pumps driven by constant speed motors. Each pump is provided with a liquid level control (to automatically start and stop the pump), high water level alarm and a control panel. Sump pumps FT-SP-1, FT-SP-2 and FT-SP-3 have a rated capacity of 150 gpm at a rated head of 25 feet. Sump pumps FT-SP-4 and FT-SP-5 have a rated capacity of 150 gpm at a rated head of 30 feet.

(2) NORMAL OPERATION

Each sump pump is provided with a HAND-OFF-AUTO selector switch located on its associated sump pump control panel near the unit. Under normal operation, when the HAND-OFF-AUTO selector switch for each sump pump is in the AUTO position, each sump pump will start and stop automatically in response to changes in the sump liquid level.

(3) START-UP AND SHUTDOWN PROCEDURES

To start and shut down the sump pumps, use the following procedures:

a. START-UP

1. Open the manually operated valve in the discharge line of each pump
2. Place the HAND-OFF-AUTO selector switch for each pump in the AUTO position
3. Close the breaker handle on the associated sump pump control panel for each pump
4. Close the circuit breaker on the associated motor control centers for each sump pump

b. SHUTDOWN

1. Place the associated HAND-OFF-AUTO selector switch in the OFF position

NOTE

If maintenance is to be performed on a pump, open the circuit breaker on the associated motor control center for the sump pump and open the breaker handle for the pump on its control panel.

Follow approved **Lockout/Tagout** procedures
(See Chapter VI, Safety).

(4) ALTERNATE OPERATION

Each sump pump may be operated manually when the HAND-OFF-AUTO selector switch is the HAND position. When the HAND-OFF-AUTO selector switch is in the HAND position, the pump will run continuously.

(5) MONITORS AND ALARMS

Each sump pump is provided with a running indicating light. Audible and visual alarms are also provided for each sump pump at the associated annunciator or control panel for high water sump level and motor moisture. The alarms will be also relayed by the SCADA system.

K. EFFLUENT WATER (SEE FIGURES III-SU-UPS-5 THROUGH 9)

The effluent water equipment in Sludge Pumping Station Nos. 1-5 consists of piping and fittings, shut off valves, flow indicators and needle valves, solenoid valves and pressure switches.

Effluent water is supplied to the Sludge Pumping Stations by the general purpose effluent water pumps as described Section III-FL-FB FILTER BUILDING NOS. 1 AND 2 AND JUNCTION CHAMBER NO. 6.

The effluent water is used for pump seal and lubrication water and pressure switch purge water.

L. PLANT AIR (SEE FIGURE III-SU-UPS-1 THROUGH 3)

The plant air equipment in Sludge Pumping Station Nos. 1-5 consists of piping and fittings, shut off valves, hose connections, pressure regulating valves, pressure gauges, various solenoid valves and moisture traps.

Compressed air is supplied to the Sludge Pumping Station by the plant air system as described in Section III-OB-MPS MAIN PUMPING STATION.

The plant air equipment supplies air to the pneumatically operated valves and to hose connections.

M. PLANT WATER (SEE FIGURE III-SU-UPS-4)

The plant water equipment in Sludge Pumping Station No. 1 consists of piping, fittings and valves and hose hydrants.

Plant water is supplied to the Sludge Pumping Station by the plant water equipment as described in Section III-OB-MPS MAIN PUMPING STATION.

The plant water is used for hosing down the floors and for flushing water at the sludge sample sink.

N. HOISTING EQUIPMENT

(1) GENERAL

The hoisting equipment for Sludge Pumping Station Nos. 1-5 consists of three 2-ton capacity Monorail Hoists and two (2) 3-ton capacity Overhead Underhung Cranes. This hoisting equipment is provided to lift other equipment and objects in the Sludge Pumping Stations as required.

Refer to the Contractor's O & M Manuals for Manufacturer's Service Manuals pertaining the equipment.

(2) MONORAIL TROLLEY HOISTS: FT-MH-1, FT-MH-2, FT-MH-3

a. DESCRIPTION

The monorail trolley hoist are provided as follows:

1. Hoist FT-MH-1, located in Sludge Pumping Station No.1,
2. Hoist FT-MH-2, located in Sludge Pumping Station No.2, and
3. Hoist FT-MH-3, located in Sludge Pumping Station No.3.

Each monorail hoist consists of a 2-ton capacity monorail trolley, a 3 hp hoist motor, a ½ hp trolley motor, and a pendant control station. Each of the monorail is provided with a single speed motor. The trolley and hoist motors are equipped with multiple disc brakes which engage for positive stopping when the motors are de-energized.

b. NORMAL OPERATION

Each monorail trolley is provided with a pendant control station with push buttons which control operation of the trolley motors and hoist motors. Each pendant control station is provided with FORWARD-REVERSE push buttons to operate the trolley motor and UP-DOWN push buttons to operate the hoist motor.

(3) OVERHEAD UNDERHUNG CRANE: FT-BC-1, FT-BC-2

a. GENERAL

The overhead underhung cranes are provided as follows:

1. Overhead crane, located in Sludge Pumping Station No. 4, and
2. Overhead crane, located in Sludge Pumping Station No. 5.

The overhead underhung crane consists of a monorail trolley hoist with an electric motor operated trolley and hoist, a motor operated crane bridge and pendant control station suspended from the monorail trolley.

The bridge and trolley motors are ¾ hp motors, and the hoist motor is a 10 hp motor. Each is a single speed motor. The crane bridge motor is provided with cushioned starting and positive soft cushioned braking systems. The trolley and hoist motors are equipped with multiple disc brakes which engage for positive stopping when the motors are de-energized.

b. NORMAL OPERATION

The overhead underhung crane is provided with a pendant control station with push buttons which control operation of the crane, trolley and hoist motors.

The pendant control station is provided with FORWARD-REVERSE push buttons to operate the crane motor, LEFT-RIGHT push buttons to operate the trolley motor, and UP-DOWN push buttons to operate the hoist motor.

O. VENTILATION AND AIR CONDITIONING

(1) GENERAL

The purpose of the ventilation and air conditioning system in Sludge Pumping Station Nos. 1-5 consists of 13 supply fans, 3 air conditioners, thermostats, inlet and exhaust louvers with manual dampers and associated ductwork. This equipment is to provide 100 percent outside air to Pump Rooms and Electrical Rooms and to air condition Operator's Rooms.

Refer to Divisions 4H4 and 5H4 Contractor's O & M Manuals for Manufacturer's Service Manuals pertaining the equipment.

(2) SUPPLY FANS: FT-S-1 through FT-S-13

a. DESCRIPTION

The supply fans are located as follows:

1. Supply Fans FT-S-1, 2 and 3, located in Sludge Pumping Station No. 1;
2. Supply Fans FT-S-4, 5 and 6, located in Sludge Pumping Station No. 2;
3. Supply Fans FT-S-7, 8 and 9, located in Sludge Pumping Station No. 3;
4. Supply Fans FT-S-10 and 11 located in Sludge Pumping Station No. 4;
5. Supply Fans FT-S-12 and 13, located in Sludge Pumping Station No. 5.

Supply Fans FT-S-1 and 2 are cabinet type centrifugal fans, driven by two speed 15 hp motors. Each fan supplies 13,500 cubic feet per minute of outside air to Sludge Pumping Station No. 1 when operating at high speed and 6,750 cubic feet per minute when operating at low speed.

Supply Fan FT-S-3 is a centrifugal fan driven by a 1/4 hp motor. The fan supplies 1,040 cubic feet per minute of outside air to the Electrical Room of Sludge Pumping Station No. 1.

Supply Fans FT-S-4 and 5 are cabinet type centrifugal fans, driven by two speed 15 hp motors. Each fan supplies 13,500 cubic feet per minute of outside air to Sludge Pumping Station No. 2 when operating at high speed and 6,750 cubic feet per minute when operating at low speed.

Supply Fan FT-S-6 is a centrifugal fan driven by a 1/2 hp motor. The fan supplies 3,000 cubic feet per minute of outside air to the Electrical Room of Sludge Pumping Station No. 2.

Supply Fans FT-S-7 and 8 are cabinet type centrifugal fans, driven by two speed 10 hp motors. Each fan supplies 9,000 cubic feet per minute of outside air to Sludge Pumping Station No. 3 when operating at high speed and 4,500 cubic feet per minute when operating at low speed.

Supply Fan FT-S-9 is a centrifu gal fan driven by a 1/4 hp motor. The fan supplies 1,040 cubic feet per minute of outside air to the Electrical Room of Sludge Pumping Station No. 3.

Supply Fans FT-S-10 and 11 are fiberglass duct vane axial type fans, driven by two speed 5 hp motors. Each fan supplies 7,000 and 10,500 cubic feet per minute of outside air to Sludge Pumping Station No. 4 when operating at speed of 1,040 of 1,560 rpm, respectively.

Supply Fans FT-S-12 and 13 are fiberglass duct vane axial type fans, driven by two speed 5 hp motors. Each fan supplies 6,667 and 10,000 cubic feet per minute of outside air to Sludge Pumping Station No. 5 when operating at speed of 1,020 and 1,530 rpm, respectively.

b. NORMAL OPERATION

Supply Fans FT-S-1, 2, 4, 5, 7, 8 are each provided with an ON-OFF switch with a locking device for the OFF position and a TEST push button (for fast speed) at each unit and an OFF-AUTO selector switch on the associated Motor Control Center (MCC-41, MCC-43, MCC-45). Under normal operation when the selector switch for both fans is in the AUTO position, the fans will run continuously at slow speed. When the temperature in the Pump Room rises above the thermostat control set point, both fans will operate at fast speed until the temperature drops below the set point.

Supply Fan FT-S-3, 6, 9 are each provided with an ON-OFF switch mounted at a convenient operating height near the fan. The fans may be operated continuously or intermittently, as required.

Supply Fans FT-S-10 through 13 are provided with LOW and HIGH test push buttons and an ON-OFF selector switch at each unit and an AUTO-OFF-HI-LO selector switch for each unit on the associated Temperature Control Panel (FT-TCP-1 and/or FT-TCP-2). Under normal operation, the AUTO-OFF-HI-LO selector switch for each fan will be in the AUTO position and the fans will operate when the temperature in the equipment room rises above the thermostat control set point. When the AUTO-OFF-HI-LO selector switch is in the HI or LO positions, each fan will run continuously, regardless of the temperature in the equipment room. Supply Fans FT-S-10 through 13 are provided with two position motor operated outside air dampers which automatically open or close with unit operation.

c. START-UP AND SHUTDOWN PROCEDURES

To start-up and shutdown the ventilation equipment, use the following procedures:

1. Start-up
   (a) Supply Fans FT-S-1, 2, 4, 5, 7 and 8
      (i) Open the manual dampers on the intake and exhaust louvers

(ii) Close the circuit breakers for the supply fans in the associated motor control center (MCC-41, MCC-43 and/or MCC-45)

(iii) Place the OFF-AUTO selector switch on associated motor control center in the AUTO position

(b) Supply Fans FT-S-3, 6 and 9

(i) Place the ON-OFF switch in the ON position

(c) Supply Fans FT-S-10 through 13

(i) Open the manual dampers on the intake and exhaust louvers

(ii) Close the circuit breakers for the supply fans in the associated motor control center (MCC-811 and/or MCC-814)

(iii) Place the ON-OFF selector switch at the unit in the ON position

(iv) Place the AUTO-OFF-HI-LO selector switch on associated Temperature Control Panel (FT-TCP-1 and/or FT-TCP-2) in the AUTO, HI or LO position

NOTE

When the selector switch is in the AUTO position, the supply fan will operate when the temperature in the Pump Room exceeds a preset limit. However, when the selector switch is in the HI or LO positions, the supply fan will operate continuously, regardless of the temperature in the equipment room.

2. Shutdown

(a) Supply Fan FT-S-1, 2, 4, 5, 7 and 8

(i) Place the OFF-AUTO selector switch on the associated motor control center (MCC-41, MCC-43 and/or MCC-45) in the OFF position

NOTE

If maintenance is to be performed on the supply fan, open the circuit breaker on the associated motor control center, place the ON-OFF switch at the unit in the OFF position and engage the locking device. Follow approved **Lockout/Tagout** procedures (See Chapter VI, Safety).

(b) Supply Fan FT-S-3, 6 and 9

(i) Place the ON-OFF switch in the OFF position

(c) Supply Fans FT-S-10 through 13

(i) Place the AUTO-OFF-HI-LO selector switch on the associated Temperature Control Panel (FT-TCP-1 and/or FT-TCP-2) in the OFF position, Or

(ii) Place the ON-OFF selector switch at the unit in the OFF position

NOTE

If maintenance is to be performed on the supply fan, open the circuit breaker on the associated motor control center, place the ON-OFF selector switch at the unit in the OFF position and engage the locking device. Follow approved **Lockout/Tagout** procedures (See Chapter VI, Safety).

d. MONITORS

The monitoring equipment for the ventilation equipment is provided as follows:

1. Supply Fans FT-S-1 and 2 are provided with OFF-SLOW-FAST operational indicating lights on Motor Control Center MCC-41.

2. Supply Fans FT-S-4 and 5 are provided with OFF-SLOW-FAST operational indicating lights on Motor Control Center MCC-43.

3. Supply Fans FT-S-7 and 8 are provided with OFF-SLOW-FAST operational indicating lights on Motor Control Center MCC-45.

4. Supply Fan FT-S-3, 6 and 9 is provided with an operational indicating light near the unit.

5. Supply Fans FT-S-10 and 11 are each provided with an operational indicating light and a fan failure light on the Temperature Control Panel FT-TCP-1. Each fan is also provided with a differential pressure switch which will de-energize the fan motor, close the motor operated outside air damper and initiatean an alarm signal when fan failure is sensed. Fan running status and alarms will be displayed in the SCADA system.

6. Supply Fans FT-S-12 and 13 are each provided with an operational indicating light and a fan failure light on the Temperature Control Panel FT-TCP-2. Each fan is also provided with a differential pressure switch which will de-energize the fan motor, close the motor operated outside air damper and initiatean an alarm signal when fan failure is sensed. Fan running status and alarms will be displayed in the SCADA system.

(3) AIR CONDITIONERS: FT-SAC-1, FT-AC-1 and FT-AC-2

a. DESCRIPTION

The air conditioners are located as follows:

1. Air Conditioner FT-SAC-1, located in Sludge Pumping Station No.2;
2. Air Conditioner FT-AC-1, located in Sludge Pumping Station No.4; and
3. Air Conditioner FT-AC-2, located in Sludge Pumping Station No. 5.

Air Conditioners FT-SAC-1, FT-AC-1 and FT-AC-2 are each a self-contained room air conditioning unit with a maximum cooling capacity of 33,500 Btu/hr. Air Conditioner FT-SAC-1 serves the Operator's Room in Sludge Pumping Station No. 2, and Air Conditioners FT-AC-1 and FT-AC-2 serve the Electrical Rooms in Sludge Pumping Station No. 4 and 5, respectively.

Refer to Divisions 4H4 and 5H4 Contractor's O & M Manuals for Manufacturer's Service Manuals pertaining the equipment.

b. NORMAL OPERATION

Air Conditioner FT-SAC-1 is operated continuously or intermittently based on room temperature, as required by unit mounted controls.

Air Conditioners FT-AC-1 and FT-AC-2 are provided with a HAND-OFF-AUTO selector switch at Temperature Control Panels FT-TCP-1 and FT-TCP-2, respectively. Under normal operation, the HAND-OFF-AUTO selector switch for each air conditioner will be in the AUTO position and the unit will operate when the temperature in the Electrical Room rises above the thermostat control set point. When the HAND-OFF-AUTO selector switch is in the HAND position, the unit will run continuously, regardless of the temperature in the Electrical Room. Air Conditioners FT-AC-1 and FT-AC-2 are also provided with two position motor operated outside air dampers which automatically open or close with unit operation.

c. START-UP AND SHUTDOWN PROCEDURES

To start up and shut down the air conditioning equipment, use the following procedures:

1. Start-up
   - (a) Air Conditioner FT-SAC-1
     - (i) Plug unit into receptacle provided
     - (ii) Start air conditioner by using unit mounted controls
   - (b) Air Conditioners FT-AC-1 and FT-AC-2
     - (i) Close the circuit breakers for the air conditiners at the associated motor control center (MCC-811 and/or MCC-814)
     - (ii) Place the HAND-OFF-AUTO selector switch on associated Temperature Control Panel (FT-TCP-1 and/or FT-TCP-2) in the AUTO or HAND position

NOTE

When the selector switch is in the AUTO position, the air conditiner will operate when the temperature in the Electrical Room reaches a preset limit. However, when the selector switch is in the HAND position, the air conditioner will operate continuously, regardless of the temperature in the equipment room.

2. Shutdown
   (a) Air Conditioner FT-SAC-1
      (i) Push the stop button at the unit

   (b) Air Conditioners FT-AC-1 and FT-AC-2
      (i) Place the HAND-OFF-AUTO selector switch on the associated Temperature Control Panel (FT-TCP-1 and/or FT-TCP-2) in the OFF position

NOTE

If maintenance is to be performed on the air conditioner, open the circuit breaker on the associated motor control center. Follow approved **Lockout/Tagout** procedures (See Chapter VI, Safety).

d. MONITORS

Air Conditioners FT-AC-1 and FT-AC-2 are provided with an operational indicating light and an air conditioner failure light on the Temperature Control Panels FT-TCP-1 and FT-TCP-2, respectively. Each unit is also provided with a differential pressure switch and supply and return duct mounted smoke detectors. Upon activation, the differential pressure switch will de-energize the supply fan motor, close the motor operated outside air damper and initiatean an alarm signal when unit failure is sensed. Upon activation the smoke detectors will de-energize the supply fan motor. Fan running status and alarms will be displayed in the SCADA system.

P. POWER DISTRIBUTION SYSTEM

The power distribution system is shown in detail on the contract plans and various shop-drawings. Refer to Table III-FS-SPS-1 through III-FS-SPS-5, Facility Equipment Summary, for Contract plan and shop drawing numbers which pertain to the power distribution system for each sludge pumping station.

III-FS-ABP ACCESS BUILDING AND PIPE TUNNEL (045)

A. GENERAL

The pipe tunnel contains the piping between the Final Sedimentation Tanks, the Post Aeration-Chlorination Tanks and the Filter Building. The Access Building provides an entrance to the pipe tunnel at the south end of the Final Sedimentation Tanks Pipe Gallery (see Figure III-FS-ABP-1).

The pipe tunnel, a single-level structure, and the Access Building, a two-level structure, contain the following equipment and systems:

- Sump Pump
- Ventilation Equipment
- Power Distribution System

Refer to Table III-FS-ABP-1, Access Building and Pipe Tunnel - Facility Equipment summary, for control numbers, manufacturers, equipment capacities, and operation, maintenance, contract plan and shop drawing references. Refer to the Contractor's O & M Manual for Manufacturer's Service Manuals pertaining to equipment located in the Access Building and Pipe Tunnel.

B. SUMP PUMP: PT-SP-1

The sump pumping equipment in the Access Building and Pipe Tunnel consists of one Sump Pump and Associated Drive Motor, designated PT-SP-1, and associated control panel, cover plate and frame and sump level controls.

The sump pumping equipment is located in the lower level of the Access Building and discharges into the Effluent Channel of Final Sedimentation Tanks Nos. 1-12 (see Figure III-FS-ABP-1).

Four a complete description of the sump pumping equipment, operation and control, refer to the section headed "Sump Pumping Equipment."

C. VENTILATION EQUIPMENT: PT-S-2

(1) DESCRIPTION

The ventilation equipment is provided to supply 100 percent outside air to the Access Building and Pipe Tunnel.

The ventilation equipment consists of one Supply Fan, designated PT-S-2, inlet and exhaust louvers with manual dampers and associated ductwork.

Supply Fan PT-S-2 is an in-line type, centrifugal fan driven by a single speed motor. The fan supplies 3,250 cubic feet per minute of outside air to the Access Building and Pipe Tunnel.

(2) NORMAL OPERATION

Supply Fan PT-S-2 is provided with an ON-OFF switch with locking device for the OFF position, located at the unit, and START-STOP push buttons and a red running indicator light on Motor Control Center MCC-58A.

Under normal operation, when the ON-OFF switch is in the ON position and the START push button is depressed, the supply fan will operate continuously until the OFF push button is depressed.

(3) START-UP AND SHUTDOWN PROCEDURES

To start up or shut down the ventilation equipment, use the following procedures:

a. START-UP

- Open the manually operated dampers on the intake and exhaust louvers.
- Move the ON-OFF switch at the unit to the ON position.
- Close the circuit breaker on Motor Control Center MCC-58A.
- Push START button on MCC-58A.

b. SHUTDOWN

- Push STOP button on MCC-58A.

NOTE

If maintenance is to be performed on the unit, open the circuit breaker on MCC-58A and move the ON-OFF switch at the unit to the OFF position and engage the locking device. Follow approved **Lockout/Tagout** procedures (See Chapter VI, Safety).

(4) MONITOR

Supply Fan PT-S-2 is provided with a red running indicator light on Motor Control Center MCC-58A.

D. POWER DISTRIBUTION SYSTEM

The power distribution is shown in detail on the contract plans and various shop drawings. Refer to Table III-FS-ABP-1, Access Building and Pipe Tunnel - Facility Equipment Summary for contract plan and shop drawing numbers which pertain to the power distribution system.

III-OS - OVERFLOW STRUCTURE (018)

A. **GENERAL**

Effluent flows to the Overflow Structure from Junction Chamber No. 4 through a 96-inch plant effluent conduit. Storm water flows to the Overflow Structure through an 84-inch sewer. Flow from the Overflow Structure discharges into Hillsborough Bay through a 78-inch outfall conduit. A 72-inch conduit and a 96-inch conduit are provided as secondary relief outfalls for the overflow structure (See Figure III-OS-1).

The overflow structure contains the following equipment:

- Sluice Gates
- Tide Gate

Refer to Table III-OS-1, Overflow Structure - Facility Equipment Summary, for the manufacturers, equipment capacities, and operation, maintenance, contract plan and shop drawing references. Refer to the Contractor's O & M Manual for Manufacturer's Service Manuals pertaining to the Sluice Gates and Tide Gate.

B. **SLUICE GATES: OG-SG-1 AND 2**

(1) DESCRIPTION

Sluice Gates are provided to divert flow from the 78-inch outfall to the 96-inch secondary relief outfall. Table III-OS-2 indicates plan, designation number, size, type operator and function of the Sluice Gates.

TABLE III-OS-2 - FUNCTION OF SLUICE GATES

CONTRACT PLAN DESIGNATION	SIZE (INCHES)	OPERATOR TYPE	FUNCTION
OG-SG-1	72x60	Handwheel	Permits flow to enter the secondary relief outfall (in open position)
OG-SG-2	72x60	Handwheel	Permits flow to enter the secondary relief outfall (in open position)

Stop Log Grooves are generally provided to isolate each Sluice Gate for maintenance (See Figure III-OS-1).

(2) NORMAL OPERATION

Sluice Gates OG-SG-1 and 2 are located in the secondary relief channel and control flow to the relief outfall. The Sluice Gates are manually operated by means of a handwheel. Turning the crank in the counterclockwise direction opens the gate.

(3) MONITORS & ALARMS

A bubbler system is provided at the Overflow Structure in order to determine the height of the flow at the overflow weirs. The data is transmitted to the Remote Telemetry Unit in the Belt Thickener Building. The data is then used to calculate the total effluent flow.

C. TIDE GATE

A Tide Gate is provided to prevent effluent sewage from entering the 84-inch sewer. The Tide Gate allows storm flow from the sewer to enter the overflow structure when the head of the water in the storm sewer exceeds the pressure exerted in the gate by the sewage in the overflow structure.

III-SU-VAL VALVES

A. GENERAL

The valves consist of plug, check, gate, globe, butterfly, ball, pressure regulating, pressure relief and air release valves. Each valve is given a unique number, and is tracked using the computerized plant maintenance management system.

Most valves are provided with valve operators as follows:

- Manual Valve Operators
- Pneumatic Valve Operators with Remote Control
- Pneumatic Valve Operators with Automatic Control (Plug Check Valves)
- Pneumatic Valve Operators with Automatic Control and Remote Override
- Motor Valve Operators with Automatic Control and Remote Override

B. MANUAL VALVE OPERATORS

(1) DESCRIPTION

The manual valve operators are provided to manually open or close the associated valves. The manual valve operators consist of lever, handwheel and chainwheel type operators.

(2) NORMAL OPERATION

Under normal operation, when a manual valve operator is rotated in the counter clockwise direction, the associated valve will open and when the manual valve operator is rotated in the clockwise direction, the associated valve will close.

C. PNEUMATIC VALVE OPERATORS WITH REMOTE CONTROL

(1) DESCRIPTION

The pneumatic valve operators with remote control are provided to completely open or close the associated valves from remote locations.

Each pneumatic valve operator with remote control consists of a double acting pneumatic cylinder, a 4-way solenoid operated pilot valve and one or more remote push button control stations.

(2) NORMAL OPERATION

Each pneumatic valve operator is provided with OPEN-CLOSE push buttons at a remote control station and an AUTO-MANUAL selector switch and OVERRIDE button at the valve. Under normal operation, when the AUTO-MANUAL selector switch is in the AUTO position, the OPEN-CLOSE push buttons at the remote control station will control operation of the valve operator.

NOTE

Valve operation can be reversed by pushing the OVERRIDE button. For example, if the valve is open or in the process of being opened, pushing the OVERRIDE button will close the valve.

(3) START-UP AND SHUTDOWN PROCEDURES

To start up and shut down the pneumatic valve operators with remote control, use the following procedures:

a. START-UP

- Make sure that the plant air system is operating and open the manually operated valves necessary to supply plant air to the pneumatic valve operators
- Place the AUTO-MANUAL selector switch at the valve operator in the AUTO position
- Depress the associated OPEN or CLOSE push button at the remote control station

b. SHUTDOWN

- Place the AUTO-MANUAL Selector switch in the MANUAL position

NOTE

If maintenance is to be performed on the valve or valve operator, close the manually operated valve in the plant air supply line to the valve operator.

(4) ALTERNATE OPERATION

The pneumatically operated valves may be operated manually when the AUTO-MANUAL selector switch is in the MANUAL position. To operate the valve manually, attach a wrench to the manual operating nut on the valve an rotate the nut counterclockwise to open or clockwise to close the valve.

CAUTION

Do not return the pneumatic valve operator to automatic operation without removing the wrench from the operating nut.

(5) MONITORS

Each valve is provided with a position indicator on the valve operator. Valve position indicating lights are provided at the remote control station(s).

D. PNEUMATIC VALVE OPERATORS WITH AUTOMATIC CONTROL (PNEUMATICALLY OPERATED PLUG CHECK VALVES)

(1) DESCRIPTION

The pneumatic operators with automatic control are provided to automatically open and close the pump plug check valves in response to pump discharge pressure and a shutdown signal, respectively.

Each pneumatic valve operator with automatic control consists of a double acting pneumatic cylinder, a 4-way solenoid pilot valve, two speed control valves with a 2-way solenoid valve for rapid valve closure and a pump discharge pressure switch.

(2) NORMAL OPERATION

Each pneumatic valve operator with automatic control is provided with an AUTO-MANUAL selector switch and an OVERRIDE button at the valve operator. Under normal operation, when the AUTO-MANUAL selector switch is in the AUTO position, the valve operators will operate as follows:

a. OPEN CYCLE

- A system start signal is initiated manually by depressing the pump START push button
- As the pump motor starts and the pump discharge pressure rises a pressure switch energizes the 4-way solenoid pilot valve when the pump discharge pressure exceeds the pressure switch set point value
- Air enters the pneumatic valve operator and begins to open the pump plug check valve at a controlled speed
- The valve and pump reach completely open and full speed, respectively, at the same time

NOTE

Valve operation can be reversed by pushing the OVERRIDE button. For example, if the valve is open or in the process of being opened, pushing the OVERRIDE button will close the valve.

b. NORMAL CLOSE CYCLE

- A system stop signal is initiated manually by depressing the pump STOP push button
- The pump motor continues to operate while air enters the pneumatic valve operator and begins to close the valve at a controlled speed
- After the valve is completely closed the pump motor will be de-energized

c. EMERGENCY CLOSE CYCLE

- A Valve operator emergency close cycle is initiated either automatically from a pump lockout relay signal or manually by depressing the pump EMERGENCY STOP push button
- The pump motor is de-energized immediately and the rapid closing solenoid pilot valve operates to rapidly close the valve.

(3) START-UP AND SHUTDOWN PROCEDURES

To start up and shut down the pneumatic valve operators with automatic control, use the following procedures:

a. START-UP

- Make sure the plant air system is operating and open the manually operated valves necessary to supply plant air to the pneumatic valve operators
- Place the AUTO-MANUAL selector switch at the valve in the AUTO position
- Follow the start-up procedures for the associated pump as discussed in the associated section of this chapter

b. SHUTDOWN

- Place the AUTO-MANUAL selector switch in the MANUAL position

NOTE

If maintenance is to be performed on the valve or valve operator, close the manually operated valve in the plant air supply line to the valve operator.

(4) ALTERNATE OPERATION

The pneumatically operated valves may be operated manually when the AUTO-MANUAL selector switch is in the MANUAL position. To operate the valve manually, attach a wrench to the manual operating nut on the valve and rotate de nut counterclockwise to open or clockwise to close the valve.

CAUTION

Do not return the pneumatic valve operator to automatic operation without removing the wrench from the operating nut.

(5) MONITORS

A valve position indicator is provided on the valve operator.

E. PNEUMATIC VALVE OPERATORS WITH AUTOMATIC CONTROL AND REMOTE OVERRIDE

(1) DESCRIPTION

The pneumatic valve operators with automatic control and remote override are provided to automatically open and close the valves in response to sequence controls from remote location.

Each pneumatic valve operator with automatic control and remote override consists of a double acting pneumatic cylinder and a 4-way solenoid pilot valve.

(2) NORMAL OPERATION

Each Pneumatic valve operator with automatic control and remote override is provided with an AUTO-NORMAL selector switch and an OVERRIDE button at the valve operator. Under normal operation, when the AUTO-MANUAL selector switch is in the AUTO position, the valve operator will completely open and close in response to remote sequence controls.

NOTE

Valve operation can be reversed by pushing the OVERRIDE button. For example, if the valve is open or in the process of being opened, pushing the OVERRIDE button will close the valve.

(3) START-UP AND SHUTDOWN PROCEDURES

To start up and shut down the pneumatic valve operators with automatic control and remote override, use the following procedures:

a. START-UP

- Make sure that the plant air system is operating and open the manually operated valves necessary to supply plant air to the pneumatic valve operators
- Place the AUTO-MANUAL selector switch at the valve operator in the AUTO position

(4) SHUTDOWN

- Place the AUTO-MANUAL selector switch in the MANUAL position

NOTE

If maintenance is to be performed on the valve or valve operator, close the manually operated valve in the plant air supply lines to the valve operator.

(5) ALTERNATE OPERATION

The pneumatic operated valves may be operated manually when the AUTO-MANUAL selector switch is in the MANUAL position. To operate the valve manually, attach a wrench to the manual operating nut on the valve and rotate the nut counterclockwise to open or clockwise to close the valve.

CAUTION

Do not return the pneumatic valve operator to automatic operation without removing the wrench.

(6) MONITORS

A Valve position indicator is provided on each valve operator.

F. MOTOR VALVE OPERATORS WITH AUTOMATIC CONTROL AND REMOTE OVERRIDE

(1) DESCRIPTION

The motor valve operators with automatic control and remote override are provided to automatically operate in response to alarm, sequence control, or control signals from remote locations.

The motor valve operators consist on the following equipment:

- Reactor's oxygen pressure control equipment
- Reactor's oxygen supply valves
- Reactor's oxygen vent gas equipment
- Denitrification filter's influent valves
- Denitrification filter's effluent control valves

The motor valve operators for the valves listed above, consist of electric motor valve operators and operator controllers at the valves.

(2) NORMAL OPERATION

The HPO Reactor's oxygen pressure control equipment is provided with pressure control set point stations on the Oxygen Dissolution Equipment Control Cabinet (ODECC) and CLOSE-AUTO-MANUAL selector switches on the operator controllers at the valves. Under normal operation, when the CLOSE-AUTO-MANUAL selector switch for each valve is in the AUTO position, the motor valve operator will modulate the pressure control valve to maintain the set point pressure on the ODECC, as described in the section headed "Oxygen Reactors."

The HPO Reactor's oxygen supply valves are provided with automatic high combustible gas alarm relays and CLOSE-HOLD-OPEN-AUTO selector switches on the ODECC and CLOSE AUTO-MANUAL selector switches on the operator controller at the valves. Under normal operation, when the selector switch for each valve is in the AUTO position, the motor valve operator will completely close the oxygen supply valve if a combustible gas alarm occurs as described in the section headed "Oxygen Reactors."

The HPO Reactor's oxygen vent gas is provided with master controllers on the ODECC and CLOSE AUTO-MANUAL selector switches on the operator controllers at the valves. Under normal operation, when the CLOSE-AUTO MANUAL selector switch for each valve is in the AUTO position, the motor valve operator will modulate the vent gas valve to maintain the vent gas oxygen purity at the set point purity on the ODECC, as described in section headed "Oxygen Reactors."

The denitrification filter's influent valves are provided with automatic sequence controls on the Filter Building Panel-Filter Section (FBP-FS) and CLOSE-AUTO-MANUAL selector switches on the operator controllers at the valves. Under normal operation, when the CLOSE-AUTO-MANUAL selector switch for each valve is in the AUTO position, the motor valve operator will completely open or close the associated filter influent valve on a signal from the denitrification filter's control system, as described in the section headed " Denitrification Filter Nos. 1-20, 21-26 and 31-36."

The denitrification filter's effluent valves are provided with liquid level and automatic sequence controls on the FBP-FS and CLOSE-AUTO-MANUAL selector switches on the motor operators at the valves. Under normal operation, when the CLOSE-AUTO-MANUAL selector switch for each valve is in the AUTO position, the motor valve operator will modulate the filter effluent control valve to maintain the filter liquid level based on a set point liquid level on the FBP-FS and the valve operators will automatically open or close the filter effluent control valves for backwashing cycles as described in the section headed " Denitrification Filter Nos. 1-20, 21-26 and 31-36."

(3) START-UP AND SHUTDOWN PROCEDURES

To start up and shut down the motor valve operators, use the following procedures:

a. START-UP

- Start-up associated equipment and systems as described in the associated sections of this chapter
- Place the CLOSE-AUTO-MANUAL selector switch for each valve in the AUTO position

b. SHUTDOWN

- Shut down the associated equipment and systems as described in the associated sections of this chapter
- Place the CLOSE-AUTO-MANUAL selector switch for each valve in the CLOSE position

(4) ALTERNATE OPERATION

a. MANUAL OPERATION FROM THE MOTOR OPERATORS

The reactor's oxygen pressure control equipment, reactor's oxygen supply valves, reactor's oxygen vent gas equipment and the denitrification filter's influent valves may be operated from the operator controller at the valve when the CLOSE-AUTO-MANUAL selector switch at the operator controller is in the MANUAL position. The denitrification filter's effluent control valves may be operated by use of OPEN-CLOSE push buttons on the motor valve operator is in the MANUAL position.

(5) MONITORS

A valve position indicator is provided on each valve operator. The denitrification filter's influent valves and effluent control valves are provided with position indicating lights on the Filter Building Panel-Filter Section.

III-SU-UPS - UTILITY PIPING SYSTEMS

A. GENERAL

Utility piping systems consist of piping and equipment related to the distribution of:

- Plant Air
- Plant Water
- City Water
- Effluent Water
- Process Air

Refer to the following outline for a description of each utility piping system.

B. PLANT AIR

(1) DESCRIPTION

The purpose of this system is to provide compressed air at 80 to 90 psig throughout the plant (see Figures III-SU-UPS-1 through 3 for the general plant air diagram). The plant air compressors are located in the Main Pumping Station and Filter Building No. 2. The compressing equipment in the Main Pumping Station is described in the section of the operation and maintenance manual titled "Main Pumping Station." The compressing equipment in Filter Building No. 2 is described in the section of the operation and maintenance manual titled "Filter Building No. 1 and No. 2 and Junction chamber No. 6."

C. PLANT WATER

(1) DESCRIPTION

Plant water equipment is provided to supply water at 50 to 55 psig to various locations in the plant where effluent water is not suitable and city water supply could become contaminated (see Figure III-SU-UPS-4 for the general plant and city water diagram). The source of plant water is city water which is separated from the city water supply system. Plant water equipment is described in the section of the operation and maintenance manual titled "Main Pumping Station." There are also local plant water systems in the Sludge Treatment Building, Mixed Sludge Pump Station, Raw Sewage Pump Station and Sludge Dewatering Building which are described within sections of those buildings.

D. CITY WATER

(1) DESCRIPTION

City water is provided for all potable needs at the plant (see Figure III-SU-UPS-4 for the general plant and city water diagram). Refer to Chapter VII of the operation and maintenance manual titled "Utilities" for more information.

E. EFFLUENT WATER

(1) DESCRIPTION

For the purposes of conservation, general purpose effluent water is provided throughout the plant for uses that do not require potable water (see Figures III-SU-UPS-5 through 9 for the general purpose effluent water diagram). The major uses of effluent water include wash down of various facilities and equipment, pump seal and lubrication water, polymer dilution water and cooling water for the oxygen generation,

power generation equipment and various air conditioning systems. General purpose effluent water is also the water source for the fire suppression system at the Maintenance Building. Spent cooling water from oxygen generation can be recycled to the head of the post aeration chlorination tanks or discharged to the Main Pumping Station wet well. Under normal operating conditions, spent cooling water should be recycled. The spent cooling water pumps, are located in the Main Pumping Station (see the section of the operation and maintenance manual titled "Main Pumping Station" for more information).

Other uses for effluent water include filter backwash, thickening tank dilution, lawn irrigation, chlorine solution, and sulfur dioxide solution. Each of these uses is supplied by separate pumps in Filter Building No. 1. Not all effluent water reuse applications use chlorinated effluent.

F. PROCESS AIR

(1) DESCRIPTION

The purpose of process air is channel aeration, aeration of the post aeration chlorination tanks and purge air for the HPO Reactors (refer to Figures III-SU-UPS-10 and 11 for the general process air diagram). The process air blowers are located in the Main Pumping Station and are described in the section of the operation and maintenance manual titled "Main Pumping Station."

(2) PROCESS AIR EQUIPMENT: MPA-1 THROUGH 19

a. DESCRIPTION

The process air metering equipment consists of thirteen Meters, designated MPA-1 through 5 and 12 through 19 with associated manometers and six Rate Controllers, designated MPA-6 through 11, with associated flow transmitters.

Meters MPA-1 through 5, and 12 through 19 are modified type fiberglass insert type venturi tubes. Rate Controllers MPA-6 through 11 are modified type cast iron venturi tubes with an integrally mounted, modulating motor operated butterfly valve. Table III-SU-UPS-1 indicates the contract plan, 12-digit control number, location, size, and capacity for the meters and rate controllers.

b. OPERATION

Meter MPA-1 is provided to measure and indicate the total process air flow for the plant.

Meter MPA-2 is provided to measure and indicate the process air flow to the Screen and Grit Building Effluent Channel.

Meter MPA-3 is provided to measure and indicate the process air flow to the Main Pumping Station Discharge Channel.

Meters MPA-4 and 5 are provided to measure and indicate the process air flow to the west and east sections of the Reactors Influent Channel, respectively.

Rate Controllers MPA-6 through 12 are provided to supply purge air to the reactors at a selected rate upon occurrence of a combustible gas alarm. For a complete description, see the section headed "Oxygen Reactors."

TABLE III-SU-UPS-1 - PROCESS AIR METERS

METER CONTRACT PLAN DESIGNATION	12-DIGIT CONTROL NUMBER	LOCATION	SIZE (INCHES)	FLOW RANGE (CFM)	SCALE RANGE (CFM)
MPA-1	010-036-01-000	Main Pumping Station	36	2,400-24,000	0-25,000
MPA-2	005-036-01-0000	Screen and Grit Building No. 2	12	140-1,400	0-1,500
MPA-3	011-036-01-0000	HPO Reactors	8	65-650	0-700
MPA-4	011-036-02-0000	HPO Reactors	8	65-650	0-700
MPA-5	011-036-03-0000	HPO Reactors	8	65-650	0-700
MPA-6	011-036-04-0000	HPO Reactors	14	400-2,800	0-3,000
MPA-7	011-036-05-0000	HPO Reactors	14	400-2,800	0-3,000
MPA-8	011-036-06-0000	HPO Reactors	14	400-2,800	0-3,000
MPA-9	011-36-07-0000	HPO Reactors	14	400-2,800	0-3,000
MPA-10	011-036-08-0000	HPO Reactors	14	400-2,800	0-3,000
MPA-11	011-036-09-0000	HPO Reactors	14	400-2,800	0-3,000
MPA-12	011-036-10-0000	HPO Reactors	10	80-800	0-800
MPA-13	011-036-11-0000	HPO Reactors	8	65-650	0-700
MPA-14	011-036-12-0000	HPO Reactors	8	65-650	0-700
MPA-15	012-036-01-0000	Final Sedimentation Tanks	12	130-1,300	0-1,500

METER CONTRACT PLAN DESIGNATION	12-DIGIT CONTROL NUMBER	LOCATION	SIZE (INCHES)	FLOW RANGE (CFM)	SCALE RANGE (CFM)
MPA-16	012-036-02-0000	Final Sedimentation Tanks	12	130-1,300	0-1,500
MPA-17	016-036-01-0000	Post Aeration-Chlorination Tanks	16	300-3,000	0-3,000
MPA-18	016-036-02-0000	Post Aeration-Chlorination Tanks	16	300-3,000	0-3,000
MPA-19	016-036-03-0000	Post Aeration-Chlorination Tanks	16	300-3,000	0-3,000

Meters MPA-13 and 14 are provided to measure and indicate the process air flow to the west and east sections of the Reactors Effluent Channel, respectively.

Meters MPA-15 and 16 are provided to measure and indicate the process air flow to the west and east sections of the Final Sedimentation Tanks Influent Channel, respectively.

Meters MPA-17, 18 and 19 are provided to measure and indicate the process air flow to the Post Aeration-Chlorination Tanks.

(3) AIR DIFFUSER EQUIPMENT

a. DESCRIPTION

The air diffuser equipment consists of air distribution piping (including headers and drop pipes), valves, meters and diffusers. The process air blower equipment, described in the section headed "Main Pumping Station," supplies the air to the air diffuser equipment.

Refer to Figure III-SU-UPS-10 and 11, Process Air Diagram for size of the air headers and locations of drop pipes, diffusers, shutoff valves and process air meters.

b. NORMAL OPERATION

Under normal operation, each diffuser on a diffuser manifold supplies air to the associated channel or tank.

Under normal operation, the air diffuser system provides 3 cubic feet per minute (cfm) of process air per linear foot of channel.

(4) POST AERATION SYSTEM

The air diffusers equipment in the Post Aeration-Chlorination Tanks is provided for mixing and to maintain (as a minimum) a 5 mg/l concentration of dissolved oxygen (DO) in the final effluent. For a detailed description of the process air requirements, refer to the subsection headed "Process Control - Post Aeration-Chlorination" of the section headed "Post Aeration-Chlorination Tanks."

III-SD-SCB CONTROL BUILDING AND SLUDGE STORAGE TANKS (054)

A. GENERAL

The Control Building, a three level structure, and Sludge Storage Tanks contain the following equipment and systems:

- Sludge Storage Tanks
- Sludge Mixing Equipment
- Sludge Transfer Pumping Equipment
- Seal Water Booster Pumps
- Flow Meters
- Polymer Storage Tanks
- Polymer Blending Equipment
- Aging Tank Equipment
- Sump Pump
- Hoisting Equipment
- Plant Air
- Plant Water
- Effluent Water
- Heating, Ventilation and Air Conditioning Equipment
- Power Distribution System

Refer to Table III-SD-SCB-1 Control Building and Sludge Storage Tanks - Facility Equipment Summary, for control numbers, manufacturers, equipment capacities and operation, maintenance, contract plan and shop drawing references. Refer to the Division 4H9 and 5H3B Contractor's O & M Manual for Manufacturer's Service Manuals pertaining to equipment and systems associated with these facilities.

The purpose of the facilities is to temporarily store liquid sludge. Normally, the sludge will come from the anaerobic digestion tanks but raw waste activated sludge may also be stored in the tanks.

The Sludge Storage Tanks and associated equipment are designed to do the following:

- Transfer sludge to the Sludge Dewatering Building.
- Transfer sludge to the Sludge Drying Beds.
- Transfer sludge from one tank to another tank for blending or for inventory management.
- Transfer sludge to the truck loading station.

The Control Building and the Sludge Storage Tanks work in conjunction with the Sludge Drying Beds. See Sections III-SD-SDW and III-SD-SDR for descriptions of these facilities.

The operator for each area is responsible for obtaining and logging information into the plant computer logging system and on forms as required. A list of the required information to be logged is obtained by pressing the "HELP" key on the computer at the control console in the Sludge Dewatering Building. Data is entered into the computer by pressing the "ENTER" key.

B. SLUDGE STORAGE TANKS

(1) DESCRIPTION

Sludge may be pumped to any of the Sludge Storage Tanks from the anaerobic digestion facilities or waste activated sludge thickening facilities (see Figure III-SD-SCB-1). Sludge is transferred to the storage tanks on a periodic basis on any day. The appropriate valves must be open at all times to allow transferred sludge into at least one of the five tanks.

Each Sludge Storage Tank No. 1-5 is a vertical, open top, sloped invert type tank with a 30 foot - 9 inch liquid level when full. Tanks 1-3 are 32 feet diameter, circular tanks each with a nominal storage capacity of about 150,000 gallons. Tanks 4 and 5 are each 35x72-foot (inside) rectangular tanks each with a nominal storage capacity of about 500,000 gallons (see Figure III-SD-SCB-2).

The Sludge Storage Tanks are each provided with a sonic type Liquid Level Transmitter, designated PG-49, PG-50, PG-51, LIT-207 and LIT-208, Sludge Mixers, designated CB-SM-1, 2, 3, 4A, 4B, 5A and 5B and associated piping, fittings and valves.

(2) MONITORS AND ALARMS

Each Sludge Storage Tank is provided with a liquid level indicator near the sonic type liquid level transmitter at the top of the tank and a remote indicator on the Control Building Control Panel (CBCP). The Remote Transmission Unit located in the Electrical Room continuously scans and transmits the condition of all status and alarm points to the Computer in the Process Control Room in the Main Pumping Station and the Personal Computer-Based Area Operator Station located in the Control Room of the Sludge Dewatering Building. Individual alarms and status indicators are displayed by the Computer in the Process Control Room.

Each Sludge Storage Tank is provided with audible and visible alarms with HIGH and LOW level alarms on the annunciator panel on the Control Building Control Panel.

C. SLUDGE MIXING EQUIPMENT: CB-SM-1, 2, 3, 4A, 4B, 5A AND 5B

(1) DESCRIPTION

The mixing equipment is provided to mix the sludge and maintain a relatively uniform solids concentration in the sludge storage tanks.

The mixing equipment consists of seven Sludge Mixers. Sludge Mixers, designated CB-SM-1, 2 and 3, are located in Sludge Storage Tanks Nos. 1, 2 and 3, respectively. Sludge Mixers, designated CB-SM-4A and 4B, are located in Sludge Storage Tank No. 4 and Sludge Mixers, designated CB-SM-5A and 5B, are located in Tank No. 5.

Each Sludge Mixer is provided with two impellers. The upper impeller is adjustable on the impeller shaft, plus or minus 36 inches in increments of 3 inches. The lower impeller is adjustable on the impeller shaft plus or minus 24 inches in increments of 3 inches from the lowest setting.

(2) NORMAL OPERATION

Under normal operation, when a Sludge Storage Tank contains sludge, the associated Sludge Mixer is required to be in operation to maintain solids in suspension. When sludge is in Tanks No. 4 or 5 both mixers in those tanks must be in operation.

Each Sludge Mixer is provided with an ON-OFF switch with a locking device for the OFF position, TEST push button at the unit, and START-STOP push buttons on the Control Building Control Panel.

Under normal operation, when the ON-OFF switch at the unit is in the ON position and the START push button is depressed, the sludge mixer will operate continuously.

(3) START-UP AND SHUTDOWN PROCEDURES

To start up and shut down the sludge mixing equipment, use the following procedures:

a. START-UP

- Place the ON-OFF switch at the unit in the ON position.
- Close the associated circuit breaker on Motor Control Center MCC-501, MCC-501A, and MCC-501B.
- Depress the START push button for the associated unit on the Control Building Control Panel.

b. SHUTDOWN

- Depress the STOP push button for the unit on the Control Building Control Panel.

NOTE

If maintenance is to be performed on the unit, open the circuit breaker on its respective MCC and place the ON-OFF switch at the unit in the OFF position and engage the locking device. Follow approved **Lockout/Tagout** procedures (See Chapter VI, Safety).

(4) MONITORS AND ALARMS

Each Sludge Mixer is provided with status indicating lights on the Control Building Control Panel. Fault/Trip indication is provided on the annunciator panel of the Control Building Control Panel. A running indicator light is also provided for each mixer on its associated Motor Control Center (MCC-501, MCC-501A, and MCC-501B).

The Remote Transmission Unit located in the Electrical Room continuously scans and transmits the condition of all status and alarm points to the Computer in the Process Control Room in the Main Pumping Station and the Personal Computer-Based Area Operator Station located in the Control Room of the Sludge Dewatering Building. Individual alarms and status indicators are displayed by the Computer in the Process Control Room.

D. SLUDGE TRANSFER PUMPING EQUIPMENT: CB-STP-1 AND 2

(1) DESCRIPTION

Sludge transfer pumping equipment is provided to pump sludge to the sludge drying beds, from one sludge storage facility to another or into tank trucks (see Figures III-SD-SCB-1 and III-SD-SDR-1).

NOTE

Normally, sludge can be transferred to the Sludge Drying Beds by gravity, without the use of the pumps. If sludge needs to be transferred more quickly than is possible by gravity, the pumps can be used. When the pumps are used, the valves must be positioned to pump through the standpipe shown on Figure III-SD-SCB-1. This is to provide sufficient hydraulic head on the pump for proper operation.

The sludge transfer pumping equipment consists of two Sludge Transfer Pumps designated CB-STP-1 and CB-STP-2, controls and instrumentation on the Sludge Transfer Pump Control Panel and the Control Building Control Panel and pneumatically operated plug pump control check valves located in each pump discharge line.

The Sludge Transfer Pumps are single-stage, horizontal shaft, end suction, vertical discharge, nonclogging, screw centrifugal type solids-handling pumps. Each pump is driven by an electric motor powered with an adjustable frequency drive.

The Sludge Transfer Pump Control Panel consists of three sections with various front mounted indicators, push buttons, selector switches and like devices. Refer to the Division 5H3B Contractor's O & M Manual for detailed drawings of the control panel.

The assortment of motor operated plug valves and transfer piping allow stored sludge to be transferred to a variety of sludge handling facilities. Valve settings and pump selection and operation can be accomplished either locally at each device, from the Control Building Control Panel or from the Personal Computer-Based Area Operator Station located in the Control Room of the Sludge Dewatering Building. For a complete description of the motor operated valves, refer to Section III-SU-VAL headed "Valves".

(2) NORMAL OPERATION

Normally a single Sludge Transfer Pump will be in operation at a time, the other pump is provided as a standby unit. One Sludge Transfer Pump has adequate capacity to transfer sludge to the area served. An ON-OFF switch with a locking device for the OFF position and a TEST push button are provided at each Sludge Transfer Pump.

The sludge transfer pumping equipment is provided with controls on the Sludge Transfer Pump Control Panel and the Control Building Control Panel which function as described below:

- A selector switch for Sludge Transfer Pump control location is provided at the Sludge Transfer Pump Control Panel. When the selector switch is in the "CBCP" control mode, control will be via the Control Building Control Panel, and only one Sludge Transfer Pump is able to be operated at a time. When the selector switch is in the "STPCP" control mode, control will be via the Sludge Transfer Pump Control Panel, and both Sludge Transfer Pumps may be operated simultaneously.

- When the Sludge Transfer Pump Control selector switch is in the "STPCP" mode, control of each Sludge Transfer Pump is via the Sludge Transfer Pump Control Panel. Speed control of a pump in this mode is via the manual potentiometer located in the appropriate pump's section of the Sludge Transfer Pump Control Panel.

- When the Sludge Transfer Pump Master Control selector switch is in the "CBCP" mode, control of the appropriate pump is via the Control Building Control Panel or ultimately the Personal Computer-Based Area Operator Station in the Sludge Dewatering Building. A selector switch on the Control Building Control Panel is provided to select between the "CBCP" or the Personal Computer-Based Operator Station. Control of a transfer pump in this mode can be automatic or manual. In automatic control, the speed of the Sludge Transfer Pump is increased or decreased based on the desired flowrate selected at the Sludge Transfer Flow Indicating Controller, FIC-211. A four position selector switch is provided to select the desired flow meter (FE-200, FE-201, FE-202 or FE-203) to be used for the rate control loop. See Figure III-SD-SCB-1. In manual control, the speed of the Sludge Transfer Pump is increased or decreased manually with the manual speed potentiometer located on the Control Building Control Panel.

NOTE

The automatic mode is used to maintain constant flow to the Sludge Drying Beds while the liquid level in the tank being used is decreasing. The controller will adjust the speed of the pump to match the selected flow rate.

(3) START-UP AND SHUTDOWN PROCEDURES

To start up and shut down the Sludge Transfer Pumps, use the following procedures:

a. START-UP

- Start-up the Seal Water Booster Pumps as described in the subsection headed "Seal Water Booster Pumps".

- Verify that the plant air system is operating and open the valves required to supply plant air to the pneumatically operated discharge plug check valves.

- Place the ON-OFF switch at the unit in the ON position.

- Place the Sludge Transfer Pump Control selector switch in the "CBCP" position.

- Place the MANUAL/AUTO selector switch at the Control Building Control Panel in the AUTO position.

- Close the appropriate circuit breakers in MCC-501, MCC-501A or MCC-501B.

- Open or close the appropriate valves in the sludge transfer piping to allow sludge to be transferred by the selected pump to the desired location.

- Select the appropriate flow meter (FE-200, FE-201, FE-202 or FE-203) at the Control Building Control Panel.

- Select the desired flowrate on the Flow Indicating Controller (FIC-211).

- Depress the START push button on the Control Building Control Panel for the selected pump.

b. SHUTDOWN

- Depress the STOP push button on the Control Building Control Panel.

NOTE

If maintenance is to be performed on a Sludge Transfer Pump, place the ON-OFF switch at the unit in the OFF position and engage the locking device and open the circuit breaker for the respective Sludge Transfer Pump MCC-501, MCC-501A or MCC-501B. Follow approved **Lockout/Tagout** procedures (See Chapter VI, Safety).

(4) ALTERNATE OPERATION

a. ALTERNATE OPERATION A

A Sludge Transfer Pump can be operated manually at either the Control Building Control Panel or the Sludge Transfer Pump Control Panel. To initiate manual operation of a Sludge Transfer Pump at the Control Building Control Panel, use the following procedures:

- Verify that the plant air system is operating and open the valves required to supply plant air to the pneumatically operated discharge plug check valves.

- Place the ON-OFF switch at the unit in the ON position.

- Place the Sludge Transfer Pump Master Control selector switch in the "CBCP" position.

- Place the MANUAL/AUTO selector switch of the Control Building Control Panel in the

MANUAL position.

- Close the appropriate circuit breakers in MCC-501 as well as MCC-501A or MCC-501B.

- Open or close the appropriate valves in the sludge transfer piping to allow sludge to be transferred by the selected pump to the desired location.

- Depress the START push button on the Control Building Control Panel for the selected pump.

- Select the desired pump speed by adjusting the manual potentiometer located at the Control Building Control Panel.

NOTE

If the selected Seal Water Booster Pump does not automatically start up and supply seal water, the Sludge Transfer Pump will shut down after a time delay.

- To shut down the Sludge Transfer Pump depress the STOP push button on the Control Building Control Panel.

NOTE

If maintenance is to be performed on a Sludge Transfer Pump, place the ON-OFF switch at the unit in the OFF position and engage the locking device and open the circuit breaker for the respective Sludge Transfer Pump at MCC-501, MCC-501A or MCC-501B. Follow approved **Lockout/Tagout** procedures (See Chapter VI, Safety).

b. ALTERNATE OPERATION B

Each Sludge Transfer Pump can also be operated manually at the Sludge Transfer Pump Control Panel. To initiate manual operation of a Sludge Transfer Pump at the Sludge Transfer Pump Control Panel, use the following procedures:

- Verify that the plant air system is operating and open the valves required to supply plant air to the pneumatically operated discharge plug check valves.

- Place the ON-OFF switch at the unit in the ON position.

- Place the Sludge Transfer Pump Master Control selector switch in the "STPCP" position.

- Close the appropriate circuit breakers in MCC-501, MCC-501A or MCC-501B.

- Open or close the appropriate valves in the sludge transfer piping to allow sludge to be transferred by the selected pump to the desired location.

- Depress the START push button for the selected pump on the appropriate panel of the Sludge Transfer Pump Control Panel.

- Select the desired pump speed by adjusting the appropriate manual potentiometer on the Sludge Transfer Pump Control Panel.

- To shut down the Sludge Transfer Pump depress the STOP push button on the Sludge Transfer Pump Control Panel.

NOTE

If maintenance is to be performed on a Sludge Transfer Pump, place the ON-OFF switch at the unit in the OFF position and engage the locking device and open the circuit breaker for the respective Sludge Transfer Pump at MCC-501, MCC-501A or MCC-501B. Follow approved **Lockout/Tagout** procedures (See Chapter VI, Safety).

c. TANK TRUCK LOADING

A pipe connection has been provided on the east side of the Control Building for loading tank trucks with sludge (see Figure III-SD-SCB-1). The piping and valve arrangement permits a Sludge Transfer Pump to draw digested sludge from a storage tank and discharge it into a tank truck for disposal.

The valves located in the line running to the truck loading connection, the plug valve at the truck loading connection and those valves located near the flow metering devices are of the manually operated type. All other valves are motor operated and controlled via the Control Building Control Panel.

(5) MONITORS AND ALARMS

Each Sludge Transfer Pump is provided with suction and discharge pressure gauges. Valve position indicating lights are provided on the Control Building Control Panel. Each pump is provided with RUN-OFF status indicator lights on the Control Building Control Panel and with RUN and LOCKOUT RELAY TRIP status indicator lights on the Sludge Transfer Pump Control Panel.

Each pump is provided with an audible and visible alarm at the annunciator panel on the Control Building Control Panel for the following conditions:

- FAULT/TRIP
- Low seal water pressure
- High discharge pressure

E. FLOW METERS: FE-200, FE-201, FE-202, FE-203, FE-204, FE-205 AND FE-206

(1) SLUDGE FLOW METERS: FE-200, FE-201, FE-202, FE-203 and FE-204

The Sludge flow meters are provided to measure the sludge flowrate to the various sludge handling facilities. (See Figure III-SD-SCB-1).

Each Sludge flow meter is a 6-inch magnetic flow meter with an operating flow range of 200 to 900 GPM. Each meter has a self-cleaning tube and a teflon lining.

The sludge flow metering equipment consists of meters, flow transmitters at the meter and flow indicators located on the Control Building Control Panel. The Remote Transmission Unit located in the Electrical Room continuously scans and transmits the measured flows to the Computer in the Process Control Room in the Main Pumping Station and the Personal Computer-Based Area Operator Station located in the Control Room of the Sludge Dewatering Building. Individual alarms and status indicators are displayed by the Computer in the Process Control Room.

(2) POLYMER FLOW METERS: FE-205 and FE-206

The Polymer flow meters are provided to measure the polymer flowrate of blended and aged polymer that will be applied to sludge prior to application on the sludge drying beds (see Figure III-SD-SCB-3).

Each Polymer flow meter is a 2-inch magnetic flow meter. Polymer flow meter FE-205 has an operating flow range of 40 to 90 gpm and FE-206 has an operating flow range of 30 to 70 gpm. Each meter has a self-cleaning tube and a teflon lining.

The polymer flow meter equipment consists of meters, flow transmitters at the meter and flow indicators located on the Control Building Control Panel. The Remote Transmission Unit located in the Electrical Room continuously scans and transmits the measured flows to the Computer in the Process Control Room in the Main Pumping Station and the Personal Computer-Based Area Operator Station located in the Control Room of the Sludge Dewatering Building. Individual alarms and status indicators are displayed by the Computer in the Process Control Room.

F. POLYMER STORAGE TANKS: CB-PST-1 AND 2

(1) DESCRIPTION

The Polymer Storage Tanks are provided to store liquid polymer that will be supplied to the liquid polymer blending equipment. The polymer storage tank equipment consists of two Polymer Storage Tanks, designated CB-PST-1 and 2, two ultrasonic liquid level transmitters, designated LIT-209 and LIT-210, and associated piping and fittings (see Figure III-SD-SCB-3).

Each Polymer Storage Tank is a vertical, fiberglass storage tank with a 10 foot diameter and a 9 foot - 3-inch side wall height. Each tank has a nominal storage capacity of 5,000 gallons.

(2) MONITORS AND ALARMS

Valve position indicating lights for the inlet and outlet valves are provided on the Control Building Operating Panel.

Each Polymer Storage Tank is provided with a liquid level indicator on the Control Building Operating Panel. Each tank is also provided with a FULL status indicating light on the polymer unloading panel located near the polymer unloading station. Level indication will also be relayed to the Computer in the Process Control Room.

Each storage tank is provided with audible and visual alarms for LOW and HIGH LEVEL alarms on the annunciator panel on the Control Building Control Panel.

The Remote Transmission Unit located in the Electrical Room continuously scans and transmits the condition of all status and alarm points to the Computer in the Process Control Room in the Main Pumping Station and the Personal Computer-Based Area Operator Station located in the Control Room of the Sludge Dewatering Building. Individual alarms and status indicators are displayed by the Computer in the Process Control Room.

G. POLYMER BLENDING EQUIPMENT: CB-PBU-1 AND CB-PBU-2

(1) DESCRIPTION

The Polymer Blending Units, designated CB-PBU-I and 2, are provided to prepare a diluted liquid polymer solution by mixing full strength liquid polymer from the polymer storage tanks with plant or effluent water. The diluted polymer solution is batched to the Polymer Aging Tanks. Each unit is a fully integrated package that will automatically meter, dilute, activate and feed the polymer and water solution. The purpose of the equipment is to provide polymer to the sludge being transferred to the Sludge Drying Beds.

(2) NORMAL OPERATION

Under normal operation, neat polymer and water are blended in a 12-inch diameter mixing chamber. The mixing chamber is capable of diluting the liquid polymer without damaging its molecular structure. Each unit is equipped with a progressive cavity type metering pump to transfer the neat polymer to the mixing chamber of each Polymer Blending Unit. Dilution water is monitored and regulated by stainless steel turbine type flow sensors and an orifice.

Each blending unit is controlled via the Polymer System Control Panel located in the basement of the Control Building. The Polymer System Control Panel is provided with an ON-OFF switch to power itself and a selector switch to choose which blending unit will operate as the lead unit. An ON-OFF-AUTO selector switch is provided on the panel to select the mode of operation for the selected lead unit. In the AUTO position, the selected unit will automatically start and stop based on totalizer (FQ-205), make-up water pressure and liquid level in the polymer aging tank.

Controls for the Polymer Aging Tank Mixers and the Polymer Aging Tank Influent and Effluent Valves are also provided on the Polymer System Control Panel. A description of their operation is included under the subsection headed "Aging Tank Equipment".

Dilution is controlled in the manual or automatic mode by using the provided MAN-RATIO selector switch on the Polymer System Control Panel. Also provided on the panel are MANUAL and RATIO potentiometers used to vary the flow ratio of the neat polymer and dilution water.

NOTE

A back-up to the plant water system is provided by general purpose effluent water supply connection. An isolation valve is provided to separate the plant water and effluent water systems (refer Figure III-SD-SCB-3). This valve must remain closed under normal conditions.

(3) START-UP AND SHUTDOWN PROCEDURES

To start-up and shutdown the Polymer Blending Units, use the following procedures:

a. START-UP

- Verify that the ON-OFF switch for the Polymer System Control Panel is in the ON position.
- Verify that all manual valves are in the proper position.
- Select the unit that is to operate as the lead unit.
- Set the dilution control MAN-RATIO selector switch to the desired setting and adjust the applicable potentiometer.
- Place the ON-OFF-AUTO selector switch in the AUTO position and the unit will operate automatically based on a selected quantity of polymer programmed.

NOTE

Placing the ON-OFF-AUTO selector switch in the ON position will allow continuous operation of the lead unit.

- If necessary, flow rate of either the neat polymer or the dilution water can then be controlled using the appropriate potentiometer.

b. SHUTDOWN

- Place the ON-OFF-AUTO selector switch in the OFF position.

NOTE

If maintenance is to be performed on any equipment, place the ON-OFF switch for the Polymer System Control Panel in the OFF position. When the ON-OFF-AUTO selector switch is in the AUTO position, the blending unit will automatically shut down based on the totalizer, make-up water pressure and/or liquid level controls located in the aging tanks. Follow approved **Lockout/Tagout** procedures (See Chapter VI, Safety).

(4) MONITORS AND ALARMS

Each Polymer Blending Unit is provided with a dilution water flow meter and polymer pump flow meter digital display. Diluted polymer flow to the Aging Tanks is displayed on the Polymer System Control Panel. The digital displays read the individual flow rates in gallons per hour and are marked as such.

The units are also provided with red running indicator lights and amber lights to indicate low water pressure and low polymer flow alarms.

Common alarms and polymer flow to the Aging Tanks are transmitted by Remote Transmission Units. The Remote Transmission Unit located in the Electrical Room continuously scans and transmits the condition of all status and alarm points to the Computer in the Process Control Room in the Main Pumping Station and the Personal Computer-Based Area Operator Station located in the Control Room of the Sludge Dewatering Building. Individual alarms and status indicators are displayed by the Computer in the Process Control Room.

H. AGING TANK EQUIPMENT: CB-PAT-1 & 2, CB-ATM-1 & 2 AND CB-PFP-1 & 2

(1) DESCRIPTION

The aging tank equipment is provided to allow the diluted polymer solution to age and eventually to be pumped into the sludge being transferred to the Sludge Drying Beds (see Figure III-SD-SCB-3). The aging tank equipment consists of two Polymer Aging Tanks, two Aging Tank Mixers and two Polymer Feed Pumps. The system works in conjunction with the Polymer Blending Equipment discussed above.

The Polymer Aging Tanks, designated CB-PAT-1 and 2, are provided to store polymer solution and allow it to age. This process allows the polymer molecules to unfold and elongate, making the solution a more effective dewatering agent.

The Aging Tank Mixers, designated CB-ATM-1 and 2, are provided to gently mix the polymer solution while in the Polymer Aging Tanks. Mixing the polymer solution helps to unfold the polymer molecules as described above.

The Polymer Feed Pumps, designated CB-PFP-1 and 2, are provided to pump the aged polymer solution to be mixed with sludge on its way to the drying beds. One pump will operate at a time and the other

is a stand-by unit. The pumps are driven by variable frequency drive motors which allow variable speeds.

The quantity of polymer required in terms of pounds of polymer per ton of sludge solids is dependent upon the type of polymer used and the sludge characteristics. Application rate of polymer will be based on the operator's observation, over a period of time, of the reaction of the sludge to the polymer as it is applied to the Sludge Drying Beds. However, after the quantity of polymer per ton of sludge solids is determined, the full strength (neat) polymer feed rate can be determined as follows:

EXAMPLE

The full strength (neat) polymer feed rate can be determine as follows:

1. Select sludge pumping rate (X) in gpm.
2. Observe sludge density (Y) in percent solids (Laboratory Analysis)
3. Polymer feed rate (Q) is:

$$Q = \frac{XY}{2{,}000} \times \frac{P}{100}$$

Where: P = polymer application in lbs/ton sludge solids

4. Example: Sludge pumping rate, X = 500 gpm
   Sludge density, Y = 1.8 percent solids
   Desired polymer application,
   P = 20 lbs/ton sludge solids

$$Q = \frac{500 \times 1.8}{2{,}000} \times \frac{20}{100} = 0.09 \text{ gpm neat polymer}$$

Then, if diluted polymer in the day tank is a 1.0 percent solution:

$$\text{Polymer feed pump rate} = \frac{0.09}{1.0/100} = 9 \text{ gpm}$$

(2) NORMAL OPERATION

Under normal operation, the Polymer Aging Tanks are supplied diluted polymer solution from the Polymer Blending Units. A LEAD-LAG selector switch is provided at the Polymer System Control Panel located in the basement of the Control Building. The tanks are also provided with high and low level alarm lights at the Polymer System Control Panel. The liquid level of the tank determines which tank the polymer solution will be allowed to flow into. When the lead tank becomes full, polymer solution will flow to the lag tank and continue to alternate until the selected amount of polymer has been batched or both aging tanks are full.

Each Aging Tank Mixer is provided with a HAND-OFF-AUTO selector switch and a red running indicator light at the Polymer System Control Panel.

The Polymer Feed Pumps can be controlled and operated at either the Polymer Feed Pump Control Panel or at the Control Building Control Panel. The Polymer Feed Pump Control Panel is divided into three sections. Selection of which panel will control operation of the pumps is done from Section 2 of the Polymer Feed Pump Control Panel which is provided with a PFPCP-CBCP selector switch and an ON-OFF/LOCK and TEST button at each pump.

The CBCP panel is provided with a selector switch to choose which pump is to operate and an overall ON-OFF switch for the selected pump. Dual indicating red running and green off lights are provided on the CBCP. A speed indicator and ratio potentiometer are provided on the CBCP. Dual indicating lights on the CBCP indicate if operation is controlled at the PFPCP or CBCP.

The Polymer Feed Pump Control Panel contains the controls for the Polymer Feed Pumps. Each pump is provided with a START, STOP and RESET button and a potentiometer to control the pump speed. A digital display is provided to monitor the motor speed and a VFD RUN switch is provided to power the variable frequency drive. Red running and blue lock out indicating lights are provided for both the motor and the pump.

(3) START-UP AND SHUTDOWN

a. START-UP

1. Polymer Aging Tanks: CB-PAT-1 & 2

- Select which Polymer Aging Tank will operate as the lead.
- Verify that manual valves are in the proper position.
- Verify that the AUTO-MANUAL selector switch for the polymer influent valve is in the AUTO position.

NOTE

When the AUTO-MANUAL selector switch is in the MANUAL position, the polymer influent valves become manually operated.

2. Aging Tank Mixers: CB-ATM-1 & 2

- Place the HAND-OFF-AUTO selector switch in the AUTO position. Operation of the Aging Tank Mixer will then be controlled by the liquid level in the tank. (In the HAND position, the unit will operate continuously.)

3. Polymer Feed Pumps: CB-PFP-1 & 2

- Verify that manual valves are in the proper position.
- Select a pump to operate.

- Verify that the ON-OFF master switch is in the ON position and that the PFPCP-CBCP selector switch is in the CBCP position.

- The selected pump will start upon a permissive signal from the Polymer System Control Panel.
- Adjust the motor's speed as necessary.

NOTE

If maintenance is to be performed on a Polymer Feed Pump, place the ON-OFF switch at the unit in the OFF position and engage the locking device and open the circuit breaker on Motor Control Center MCC-501 for the pump. Turn the pump selector switch to place the standby pump in service. Follow approved **Lockout/Tagout** procedures (See Chapter VI, Safety).

b. SHUTDOWN

1. Polymer Aging Tanks: CB-PAT-1 & 2
- Turn the AUTO-MANUAL selector switch for the polymer influent valve to the MANUAL position and close the valve.

2. Aging Tank Mixers: CB-ATM-1 & 2
- Place the HAND-OFF-AUTO selector switch in the OFF position.

3. Polymer Feed Pumps: CB-PFP-1 & 2
- Turn the ON-OFF master switch to the OFF position.

c. POLYMER PURGE

The Polymer Purge System is designed to flush the lines of diluted polymer, wash the level indicator probes, wash the mixer blades and wash the tank walls. Polymer purge functions are manually initiated after polymer blending operations have ceased. After low level shutdown of the polymer solution in the aging tank is reached, the system operates automatically to fill the aging tank with dilution water and run the mixers for a preset time. The Polymer Aging Tanks must be manually drained using the floor drains at the base of each tank.

(4) MONITORS AND ALARMS

The polymer aging tanks are each provided with high and low level alarm probes. When the probes are activated, an alarm will sound and a light will signal high or low condition on the annunciator panel on the Polymer System Control Panel.

Flow rates are digitally displayed on the Polymer System Control Panel in gallons per hour.

I. SUMP PUMP: CB-SP-1

(1) DESCRIPTION

The sump pumping equipment is provided to automatically pump the liquid which flows into the Control Building sump from floor and equipment drains.

The sump pumping equipment in the Control Building consists of a Sump Pump and associated drive motor, designated CB-SP-1, and associated cover plate, frame and sump level controls.

The sump pump is a single stage, vertical, nonclogging, screenless, bottom suction, side discharge, centrifugal vortex type solids handling wet pit pump driven by a constant speed motor. The sump pump has a rated capacity of 150 gpm at a rated head of 25 feet.

The sump pumping equipment is located along the east wall in the lower level of the Control Building.

(2) NORMAL OPERATION

The Sump Pump is provided with a HAND-OFF-AUTO selector switch located on the control panel near the unit. Under normal operation, when the HAND-OFF-AUTO selector switch for the Sump Pump is in the AUTO position, the pump will start and stop automatically in response to changes in the sump liquid level.

(3) START-UP AND SHUTDOWN PROCEDURES

To start up and shut down the Sump Pump use the following procedures:

a. START-UP

- Make sure the effluent water system is operating and open the valves required to supply lubrication water to the pump
- Open the manually operated valve in the discharge line of the pump
- Place the HAND-OFF-AUTO selector switch for the pump in the AUTO position
- Close the breaker handle on the control panel for the pump
- Close the circuit breaker on Motor Control Center MCC-501 for the Sump Pumps

b. SHUTDOWN

- Place the associated HAND-OFF-AUTO selector switch in the OFF position

NOTE

If maintenance is to be performed on a pump, open the circuit breaker on Motor Control Center MCC-501 for the Sump Pump and open and lock the breaker handle for the pump on its

control panel. Follow approved **Lockout/Tagout** procedures (See Chapter VI, Safety).

(4) ALTERNATE OPERATION

The Sump Pump may be operated manually when the HAND-OFF-AUTO selector switch is in the HAND position. When the HAND-OFF-AUTO selector switch is in the HAND position, the pump will run continuously.

(5) MONITORS AND ALARMS

Audible and visual alarms are provided for the Sump Pump at the associated annunciator panels for low lube water pressure and high water level. The Remote Transmission Unit located in the Electrical Room continuously scans and transmits the condition of all status and alarm points to the Computer in the Process Control Room in the Main Pumping Station and to the Personal Computer-Based Area Operator Station located in the Control Room of the Sludge Dewatering Building. Individual alarms and status indication are displayed by the Computer in the Process Control Room. The pump is provided with an operational indicating light on its motor control center and a discharge pressure gauge calibrated in feet of water.

J. HOISTING EQUIPMENT: CB-MH-1

(1) DESCRIPTION

The hoisting equipment in the Control Building consists of one 3-ton capacity electric motor operated Monorail Hoist, designated CB-MH-1. The hoist consists of a single speed 4 hp hoist motor, a 1/4 hp trolley motor and a pendant control station. The Monorail Hoist is located in the Access Room of the Control Building.

(2) NORMAL OPERATION

The Monorail Hoist is provided with a pendant control station with push buttons which control operation of the trolley motor and hoist motor. The pendant control station is provided with FORWARD-REVERSE push buttons to operate the trolley motor and UP-DOWN push buttons to operate the hoist motor.

K. PLANT AIR (SEE FIGURES III-SU-UPS-1 THROUGH 3)

The plant air equipment in the Control Building and at the Sludge Storage Tanks consists of piping and fittings, shutoff valves, hose valves, in-line filters, pressure regulating valves, pressure gauges, air line lubricators and moisture traps.

Compressed air is supplied to the plant air equipment by the plant air system as described in the section headed "Main Pumping Station". The plant air equipment supplies compressed air to pneumatically operated valves and to hose connections.

L. PLANT WATER (SEE FIGURE III-SU-UPS-4)

The plant water equipment in the Control Building consists of piping and fittings, hose hydrants, a pressure gauge and shutoff valves.

Plant water is supplied to the Control Building by the plant water equipment as described in the section headed "Main Pumping Station". The plant water is supplied to the sample sink, polymer system and is also used for hosing down floors and equipment.

M. EFFLUENT WATER (SEE FIGURES III-SU-UPS-5 THROUHG 9)

The effluent water in the Control Building and Sludge Storage Tanks consists of piping and fittings, shutoff valves, needle valves, flow indicators, pressure relief valves and hose hydrants.

Effluent water is supplied to the Control Building and Sludge Storage Tanks by the general purpose effluent water pumps as described in the section headed "Filter Buildings No. 1 and No. 2 and Junction Chamber No. 6".

The effluent water is used for pump seal and lubrication water, pressure switch purge water, for hosing down tanks and pavement and as flushing water for the sludge pipelines.

N. HEATING, VENTILATING AND AIR CONDITIONING EQUIPMENT: CB-S-1, CB-AC-1, CB-REF-1

(1) DESCRIPTION

The heating, ventilating and air conditioning equipment consists of Supply Fan, designated CB-S-1, with associated duct work, Heat Pump designated CB-AC-1 with associated duct work and thermostat control and Roof Exhaust Fan designated CB-REF-1. This equipment is no longer in operation.

Supply Fan CB-S-1 is provided to supply 100 percent outside air to the Sludge Pump Room and the Electrical Room. The Supply Fan consists of a manually operated damper with associated duct work and louvers and a thermostatic control in the Electrical Room of the Control Building. The supply fan is an in-line type centrifugal fan, driven by a single speed motor and has a rated capacity of 3,940 cubic feet per minute.

Heat Pump CB-AC-1 is provided to automatically control the temperature of the Control Mezzanine of the Control Building. The Heat Pump is an air conditioning unit with both cooling and heating units and two thermostatic controls. The unit circulates a total of 1,240 cubic feet per minute and has a rated heating capacity of 24,000 Btu and a rated cooling capacity of 34,000 Btu. For a detailed discussion of the Heat Pump's operation, refer to Section 49 of the Division 4H9 Contractor's O & M Manual.

Roof Exhaust Fan CB-REF-1 is provided to exhaust air from the toilet and Stair No. 1. The Roof Exhaust Fan is driven by a single speed 1/4 hp motor and has a rated capacity of 810 cubic feet per minute.

(2) NORMAL OPERATION

Supply Fan CB-S-1 is provided with an ON-OFF switch with a locking device for the OFF position, a TEST push button at the unit, an ON-OFF-AUTO selector switch on Motor Control Center MCC-501 and a thermostatic control in the Electrical Room of the Control Building. Under normal operation, when the ON-OFF-AUTO selector switch at MCC-501 is in the AUTO position and the ON-OFF switch at the unit is in the ON position, the fan will operate as required to maintain the thermostat set point in the Electrical Room.

Heat Pump CB-AC-1 is capable of providing both cooled and heated air as required and is controlled by thermostats. Under normal operation, when the temperature inside the Electrical Room rises above the thermostat set point, the air is cooled until a lower temperature is obtained and when the temperature in the outside air supply duct drops below the thermostat set point, the cooling unit will shut down and the heating unit will operate as required to maintain the desired temperature in the Control Mezzanine.

Roof Exhaust Fan CB-REF-1 is operated by means of an ON-OFF switch located in the Toilet Room.

(3) START UP AND SHUTDOWN PROCEDURES

To start up or shut down the heating, ventilating and air conditioning equipment, use the following procedures:

a. START-UP

1. Supply Fan CB-S-1

- Open the manually operated air intake damper.
- Place the ON-OFF switch at the unit in the ON position.
- Close the circuit breaker on Motor Control Center MCC-501.
- Place the ON-OFF-AUTO selector switch on Motor Control Center MCC-501 in the AUTO position and the unit will operate to the desired thermostat set point in the Electrical Room.
- Placing the ON-OFF-AUTO selector switch in the ON position will allow the fan to be operated continuously.

2. Heat Pump CB-AC-1

- Open the manually operated air intake damper.
- Close the circuit breakers at the unit and on Motor Control Center MCC-501.
- Set the thermostat set points in the Control Mezzanine and in the outside air supply duct as desired to control the heating and cooling units.

3. Roof Exhaust Fan CB-REF-1
   - Place the ON-OFF switch in the Toilet Room in the ON position.

b. SHUTDOWN

1. Supply Fan CB-S-1
   - Place the ON-OFF-AUTO selector switch on Motor Control Center MCC-501 in the OFF position.

NOTE

If maintenance is to be performed on the Supply Fan, open the circuit breaker on MCC-501, and place the ON-OFF switch at the unit in the OFF position and engage locking device. Follow approved **Lockout/Tagout** procedures (See Chapter VI, Safety).

2. Heat Pump CB-AC-1
   - Open the circuit breaker on MCC-501.

3. Roof Exhaust Fan CB-REF-1
   - Place the ON-OFF switch in the Toilet Room in the OFF position.

O. POWER DISTRIBUTION SYSTEM

The power distribution system is shown in detail on the contract plans and various shop drawings. Refer to Table III-SD-SCB-1, Control Building and Sludge Storage Tanks - Facility Equipment Summary for contract plan drawing and numbers pertaining to the power distribution system.

III-SD-SDR - SLUDGE DRYING BEDS (027)

A. GENERAL

The Sludge Drying Beds contain the following equipment and systems:

- Dried Sludge Conveyor Equipment
- Dried Sludge Grinder Equipment
- Dried Sludge Trip-off
- Sludge Handling Equipment
- Sludge Drying Beds
- Backflow Structure
- Effluent Water
- Power Distribution System

Digested sludge is pumped to the Sludge Drying Beds from the Digested Sludge Storage Tanks through an 8-inch pipeline by pumps located in the Control Building (refer to Figure III-SD-SDR-1). Drainage from the Sludge Drying Beds is transported back to the Main Pumping Station Wet Well through a system of drain conduits (see Figures III-SD-SDR-2, III-GF-7 and III-GF-8).

Refer to Table III-SD-SDR-1 Sludge Drying Beds - Facility Equipment Summary, for control numbers, manufacturers, equipment capacities, and operation, maintenance, contract plan and shop drawing references. Refer to the Division 4H9 Contractor's O&M Manual for Manufacturer's Service Manuals pertaining to Sludge Drying Bed Equipment.

B. PROCESS CONTROL - SLUDGE DEWATERING AND DRYING

(1) DESCRIPTION

The Sludge Drying Beds are used for additional dewatering and drying of waste sludge. The beds are rectangular, open, sand media type. Sludge is pumped onto the beds through a baffled inlet structure located at the center of each bed.

During and after the filling, the liquid content of the sludge is reduced by drainage and evaporation. Underdrain piping is provided to collect the drainage and return it to the treatment plant.

(2) PROCESS CONTROL

a. SLUDGE STORAGE AND MIXING

The waste digested sludge from the anaerobic digestion process is pumped to the five Digested Sludge Storage Tanks prior to being applied to the Sludge Drying Beds. Each Digested Sludge Storage Tank Nos. 1-3 holds approximately 150,000 gallons which is also the volume of each sludge drying bed. Digested Sludge Storage Tanks Nos. 4 and 5 each have a capacity of about 475,000 gallons. Each Digested Sludge Storage Tank is provided with one or two sludge mixers which are designed to keep a uniform solids concentration throughout the entire tank volume. A uniform solids concentration in the sludge applied to the beds insures the most effective utilization of polymers.

b. DRYING BED LOADING

The rate at which sludge may be applied onto a drying bed is limited by several factors, including the following:

- Condition of the drying bed drainage media
- Degree of digestion of the sludge
- Solids concentration of the sludge
- Type and quantity of polymer

Variable speed pumping equipment has been provided to allow the operator to adjust the sludge pumping rate as required to obtain the best loading rate for a given set of conditions. The sludge drying beds can also be loaded by gravity without the use of the pumps. Refer to Section III-SD-SCB CONTROL BUILDING AND SLUDGE STORAGE TANKS for a complete description of drying bed loading procedures.

c. SURFACE WATER

Occasionally, rainwater collects on the surface of the sludge on a drying bed before the sludge has dried to a point where cracking begins. When this occurs, drying time increases. Telescoping sludge valves have been provided at several locations in each sludge drying bed to permit removal of rainwater which collects on the sludge (see Figure III-SD-SDR-2).

C. DRIED SLUDGE CONVEYORS EQUIPMENTS: DB-DSC-1, 2, 3, 4, 5, 6, 7 AND 8

(1) GENERAL

The Dried Sludge Conveyor Equipment is provided to transport the dried sludge from the Sludge Drying Beds or the dried sludge truck unloading station to the dried sludge storage area.

(2) DESCRIPTION

a. CONVEYORS DB-DSC-1, 2, 3, 4, AND 5

The 32 sludge drying beds are divided into four groups of eight beds by the conveyor and pipe gallery (which runs north-south) and an access road (which runs east west). The northwest group of beds is served by Conveyor DB-DSC-1, the northeast group by Conveyor DB-DSC-2, the southwest group by Conveyor DB-DSC-3 and the southeast group by Conveyor DB-DSC-4. Dried sludge is removed from the Sludge Drying Beds by front end loaders and is located onto Conveyor DB-DSC-1, 2, 3 or 4. Conveyor DB-DSC-1, 2, 3, or 4 then transport the dried sludge to Conveyor DB-DSC-5 which is located in the conveyor and pipe gallery. Conveyor DB-DSC-5 transports the dried sludge to Conveyor DB-DSC-6 (see Figures III-SD-SDR-3 and III-SD-SDR-4).

Conveyor DB-DSC-1, 2, 3, and 4 are each provided with four manually operated conveyor loading chutes. The chutes are provided to permit the front end loaders to deposit dried sludge onto the conveyors. The chutes are designed to permit their sloping sides to be manually tipped up away from the conveyor belt when not in use.

Conveyors DB-DSC-1, 2, 3, and 4 are each 30-inch wide horizontal troughing type belt conveyor with a capacity of 20 tons per hour of dried sludge. Conveyor DB-DSC-5 is a 30-inch wide horizontal to incline to horizontal troughing type belt conveyor with a capacity of 20 tons per hour of dried sludge.

b. CONVEYOR DB-DSC-6

Conveyor DB-DSC-6 receives and transports dried sludge from Conveyors DB-DSC-5 and DB-DSC-7 to the dried sludge storage area located north of the sludge drying beds (see Figures III-SD-SDR-3 and III-SD-SDR-4).

Conveyor DB-DSC-6 is a 30-inch wide horizontal to incline to horizontal troughing type belt conveyor with a capacity of 20 tons per hour of dried sludge.

A dried sludge trip-off is provided on Conveyor DB-DSC-6 to unload the sludge from the conveyor to dried sludge storage area. Refer to the subsection headed "Dried Sludge Trip-Off."

c. CONVEYOR DB-DSC-7

Conveyor DB-DSC-7 receives dried sludge from the Dried Sludge Truck Unloading Station and discharges it through a feed chute onto Conveyor DB-DSC-6 (see Figures III-SD-SDR-3 and III-SD-SDR-4). The sludge is then transported to the dried storage area by Conveyor DB-DSC-6.

Conveyor DB-DSC-7 is a 24-inch wide horizontal to incline to horizontal flexible wall belt conveyor with a capacity of 20 tons per hour of dried sludge.

d. CONVEYOR DB-DSC-8

This equipment is no longer in use or operation.

(3) NORMAL OPERATION

a. CONVEYORS DB-DSC-1, 2, 3, 4 AND 5

Conveyors DB-DSC-1, 2, 3, 4 and 5 are each provided with locally mounted START-STOP push buttons with a locking device for the STOP push button and with START-STOP push buttons and a red running indicator light on the Sludge Control Building - Conveyor Control Panel (SCB-CCP). Under normal operation, when the START push button is depressed, the conveyor will operate continuously.

Each conveyor is provided with an EMERGENCY STOP pull cord located on each side of the conveyor and running its entire length. Pulling either cord will stop the conveyor.

b. CONVEYOR DB-DSC-6

Conveyor DB-DSC-6 is provided with locally mounted START-STOP push buttons with a locking device for the STOP push button and with START-STOP push buttons and a red running indicator light on the SCB-CCP. Under normal operation, when a START push button is depressed the

conveyor will operate continuously. The conveyor is also provided with an EMERGENCY STOP pull cord located on the walkway side along the entire length of the conveyor. Pulling the cord will stop the conveyor.

c. CONVEYOR DB-DSC-7

Conveyor DB-DSC-7 is provided with locally mounted START-STOP push buttons with a locking device for the STOP push button and with START-STOP push buttons and a red running indicator light on the SCB-CCP. Under normal operation, when a START push button is depressed the conveyor will operate continuously. Under normal operation, when a START push button is depressed the conveyor will operate continuously. The conveyor is also provided with an EMERGENCY STOP pull cord located along the entire west side of the conveyor.

(4) START-UP AND SHUTDOWN PROCEDURES

To start up and shut down the dried sludge conveyor equipment, use the following procedures:

a. CONVEYORS DB-DSC-1, 2, 3, 4 AND 5

1. Start-up
   - Close the circuit breaker on MCC-501
   - Depress the START push button on SCB-CCP or at the unit
   - Start Conveyors DB-DSC-6

2. Shutdown
   - Depress the STOP push button on SCB-CCP or at the unit

NOTE

If maintenance is to be performed on a dried sludge conveyor, open the circuit breaker on MCC-501 and depress the locally mounted STOP push button and engage the locking device. Follow approved **Lockout/Tagout** procedures (See Chapter VI, Safety).

All conveyors operate independently. However, conveyors DB-DSC-1, 2, 3 and 4 deposit dried sludge on Conveyor DB-DSC-5. To ensure proper operation, Conveyor DB-DSC-5 is required to be operating when any of the other four are in operation.

b. CONVEYOR DB-DSC-6

1. Start-up
   - Position dried sludge trip-off in desired location as described in the subsection headed "Dried Sludge Trip-off"
   - Close the circuit breaker on MCC-501
   - Depress the START push button on SCB-CCP or at the unit

2. Shutdown
   - Depress the STOP push button on SCB-CCP or at the unit

NOTE

Before shutting down Conveyor DB-DSC-6, verify that all other conveyors which deposit sludge on Conveyor DB-DSC-6 are shut down.

If maintenance is to be performed on Conveyor DB-DSC-6, open the circuit breaker on MCC-501 and depress the STOP push button at the unit and engage the locking device. Follow approved **Lockout/Tagout** procedures (See Chapter VI, Safety).

c. CONVEYOR DB-DSC-7

1. Start-up
   - Close the circuit breaker on MCC-501
   - Depress the START push button on SCB-CCP or at the unit
   - Start Conveyor DB-DSC-6

2. Shutdown
   - Depress the STOP push button on SCB-CCP or at the unit

(5) MONITORS AND ALARMS

a. CONVEYORS DB-DSC-1, 2, 3, 4 AND 5

Each conveyor is provided with a red running indicator light on the Sludge Control Building - Conveyor Control Panel (SCB-CCP). An audible and visual alarm, activated by pulling the EMERGENCY STOP cord, is provided for each conveyor on the annunciator panel on the SCB-CCP.

b. CONVEYOR DB-DSC-6

Conveyor DB-DSC-6 is provided with a red running indicator light on the SCB-CCP. An audible and visual alarm, activated by pulling the EMERGENCY STOP cord, is provided on the annunciator panel on the SCB-CCP.

c. CONVEYOR DB-DSC-7

Conveyor DB-DSC-7 is provided with a red running indicator light on the SCB-CCP. An audible and visual alarm, activated by pulling the EMERGENCY STOP cord, is provided on the annunciator panel on the SCB-CCP.

d. GENERAL

Scanner-Transmitter No. 501 in Motor Control Center MCC-501 continuously scans and transmits the running condition of all conveyors to the Supervisory Control and Data Acquisition (SCADA) Monitoring System in the Process Control Room of the Main Pumping Station.

D. DRIED SLUDGE GRINDER EQUIPMENT: DB-DSG-1 AND 2

This equipment is no longer in use or operation.

E. DRIED SLUDGE TRIP-OFF: DB-TO-1

(1) DESCRIPTION

The dried sludge trip-off is provided to unload dried sludge from Conveyor DB-DSC-6 to the dried sludge storage area.

The dried sludge trip-off is provided to operate on crane rails in conjunction with Conveyor DB-DSC-6 on the conveyor bridge located above the dried sludge storage area.

The dried sludge trip-off operates by raising the conveyor belt over a pulley and allowing the dried sludge to fall off the conveyor into a chute. The chute directs the sludge to fall on the south side of the conveyor bridge to the dried sludge storage area.

(2) NORMAL OPERATION

Under normal operation, the dried sludge trip-off remains stationary and deposits sludge on the dried storage area.

The dried sludge trip-off is provided with momentary contact type FORWARD-REVERSE push buttons on the Sludge Control Building - Conveyor Control Panel (SCB-CCP). When the FORWARD push button is depressed, the dried sludge trip-off will travel in the east direction. When the REVERSE push button is depressed, the dried sludge trip-off will travel in the west direction.

(3) START-UP AND SHUTDOWN PROCEDURES

To start up or shut down the dried trip-off, use the following procedures:

a. START-UP

- Start up Conveyor DB-DSC-6 as described elsewhere in this section
- Close the circuit breaker on MCC-501
- Depress the FORWARD or REVERSE push buttons to position the dried sludge trip-off

b. SHUTDOWN

- Shutdown Conveyor DB-DSC-6 as described elsewhere in this section

F. SLUDGE HANDLING EQUIPMENT

The sludge handling equipment is provided for cleaning the Sludge Drying Beds and for handling and loading of dried sludge. The sludge handling equipment consists of front end loader tractors and wheel loaders.

G. SLUDGE DRYING BEDS

The Sludge Drying Beds are provided to dewater and dry the waste sludge from the treatment plant.

There are 32 sludge drying beds, located in the southeast corner of the plant site. Each bed is 150 feet long, 110 feet wide, and has a maximum liquid depth of 1-foot 4 inches.

Each sludge bed is provided with an underdrain system of 6-inch perforated PVC pipe. The underdrain piping is surrounded by coarse gravel. Each sludge bed is composed of 6 inches of fine sand, 3 inches of coarse sand, 6 inches of medium gravel and 6 inches of coarse gravel (from top layer to bottom layer). Each bed is surrounded by a concrete wall and is provided with a centrally located sludge inlet structure.

The dried sludge is scraped off the Sludge Drying Beds by front end loaders (described in the subsection headed "Sludge Handling Equipment") and dumped onto conveyor belts (described in the subsection headed "Dried Sludge Conveyor Equipment").

H. BACKFLOW STRUCTURE

The backflow structure is provided to prevent backflow from the plant drainage system from entering the Sludge Drying Beds.

The backflow structure is 4 feet wide by 8 feet long with an overall height of 20 feet. The structure receives flow from a 10-inch digested sludge storage tank overflow and from an 18-inch combined sludge drying bed drain and dried sludge storage area sewer. Flow exits the structure through an 18-inch drain which empties into the backwash water drain conduit (see Figures III-SD-SDR-2 and III-GF-8).

A flap gate is provided to prevent backflow from entering the 18-inch conduit, which discharges into the backflow structure. Stop log grooves have been provided to allow the flap gate to be isolated from the flow in the structure if maintenance is required.

I. EFFLUENT WATER (SEE FIGURES III-SU-UPS-5 THROUGH 9)

The effluent water equipment for the Sludge Drying Beds consists of piping and fitting and hose hydrants.

Effluent water is supplied to the Sludge Drying Beds by the general purpose effluent water pumps as described in the Section III-FL-FB FILTER BUILDING NO. 1 AND NO. 2 AND JUNCTION CHAMBER NO. 6. The effluent water is used to hose down equipment.

J. POWER DISTRIBUTION SYSTEM

The power distribution system is shown in detail on the contract plans and various shop drawings. Refer to Table III-SD-SDR-1, Sludge Drying Beds - Facility Equipment Summary, for contract plan and shop drawing numbers which pertain to the power distribution system.

III-SD-SDB SLUDGE DEWATERING FACILITY (032)

A. GENERAL

The Sludge Dewatering Facility consists of the Sludge Dewatering Building and the Sludge Truck Loading Area. The Sludge Dewatering Building is a totally enclosed single level structure with a mezzanine area on the east end. Sludge conveyors run eastward out of the Sludge Dewatering Building and into the Truck Loading Area. The Truck Loading Area is a covered steel frame building with open sides. Sludge conveyed into the Truck Loading Area may be deposited into trucks or conveyed south out of the Truck Loading area and onto the Dried Sludge Storage Area.

The Sludge Dewatering Facility contains the following equipment and systems:

- Sludge Grinder Equipment
- Sludge Feed Pumps
- Liquid Polymer Storage, Handling and Feed Equipment
- Belt Filter Press Equipment
- Sludge Conveyor Equipment
- Effluent Water Booster Pumps
- Plant Air Compressor Equipment
- Sludge Flow Magnetic Meters
- Polymer Flow Magnetic Meters
- Effluent Water Meters
- Hoisting Equipment
- Plant Air
- Plant Water
- Effluent Water
- Ventilating and Air Conditioning Equipment
- Power Distribution System

For a schematic diagram of the major items of equipment in the Sludge Dewatering Facility, see Figures III-SD-SDR-1 and III-SD-SDR-2.

Refer to Table III-SD-SDR-1, Sludge Dewatering Facility - Facility Equipment Summary for control numbers, manufacturers, equipment capacities, and operation, maintenance and contract plan, and shop drawing references. Refer to Division 4H14 Contractor's O&M Manual for Manufacturer's Service Manuals pertaining to the equipment in the Sludge Dewatering Facility.

B. BELT FILTER PRESS DEWATERING PROCESS

(1) DEWATERING

The belt filter press equipment provided employs three separate stages for dewatering of sludges. The first dewatering stage of the belt filter press permits gravity drainage of water from the sludge. The second and third dewatering stages of the belt filter press are mechanical pressure zones and are provided to squeeze moisture from the sludge solids.

In the second dewatering stage of the belt filter press, pressure is applied by converging two belts together to sandwich the sludge between the two belts which then travel through a series of rollers, which comprise five S bends. The length of time and the amount of pressure applied to the two belts determine the amount of dewatering which is performed and also the solids capture rate on the belt filter press.

The third dewatering stage of the belt filter press is a mechanical pressure zone known as a high-pressure zone, which follows immediately after the conventional mechanical pressure zone which can apply up to 50 pounds per square inch of pressure to get the highest degree of cake solids. However, use of this high-pressure zone to the maximum degree will reduce solids capture in the dewatered cake.

(2) PROCESS VARIABLES

The type of sludge to be dewatered will affect several variables in the belt filter press dewatering process. The variables include the amount of polymer to be used, the feed rate of sludge to the belt filter press, the amount of mechanical pressure applied, the belt travel speed, and whether or not the additional high mechanical pressure is to be applied. The types of sludges to be dewatered at Tampa are anaerobically digested primary sludge, aerobically digested waste activated sludge, or mixtures thereof. The type of sludge to be dewatered and the degree of digestion will affect the dewaterability of the particular sludge. As a rule of thumb for dewatering difficulty, anaerobically digested primary sludge is the easiest, aerobically digested waste activated sludge is the hardest, and mixtures thereof fall in between in the degree of difficulty.

The amount of polymer applied will be determined through experience depending on the types of sludge to be dewatered or the blend of sludge to be dewatered.

The sludge feed rate, in terms of the pounds per hour of sludge solids which may be fed to each belt filter press, is dependent upon the types of sludge as described above. Belt tension and belt travel speed also must be adjusted to accommodate the particular type of sludge being dewatered.

(3) PROCESS OPERATIONS CONSIDERATIONS

The process operations considerations may be enumerated as follows:

- Desired cake solids concentration
- Polymer usage - cost
- Solids capture - recycle load to plant
- Equipment life, belts, rollers, bearings, etc.

The desired cake solids concentration will determine the sludge feed rate and polymer dosage rates to be applied to the belt filter press, as well as the amount of pressure and the belt travel speed. In general, higher cake solids will require lower sludge feed rates, slower belt travel speed and higher pressures and higher polymer usages. Higher polymer usages, of course, will increase operation costs per ton of dry solids dewatered. Higher cake solids require higher pressure to squeeze the moisture from the sludge and will in turn push solids into the belts and thereby reduce the solids capture and increase the recycle load to the plant. Additionally, operating the equipment with higher belt pressures and higher pressures

through the high-pressure zone will have the effect of shortening the equipment life of belts, rollers, bearings, and the like.

The belt filter press equipment has been designed to achieve a 20 to 21 percent cake solids with about a 50 percent blend of an anaerobically digested primary sludge and aerobically digested waste activated sludge. With this blend of sludges and the 20 to 21 percent cake solids, it is anticipated that polymer costs should be less than twenty-five dollars per ton of dry solids processed, that solids capture should be in excess of 95 percent and that no significant decrease in equipment life will be experienced.

C. SLUDGE GRINDER EQUIPMENT SDB-SG-1,2

(1) DESCRIPTION

The Sludge Grinder Equipment is provided to grind the sludge before it enters the Sludge Feed Pumping Equipment. (See Figure III-SD-SDR-1)

The sludge grinder equipment consists of two Sludge Grinders, designated SDB-SG-1 and SDB-SG-2.

Each sludge grinder is an in-line, vertical unit, motor driven through a gear reducer with two shafts. The two shafts of each grinder are fitted with intermeshing cutters, which counter rotate to grind the sludge.

The sludge grinders have a rated capacity of 800 gpm of combined sludges containing from 1.5 to 5.0 percent solids.

(2) NORMAL OPERATION

Under normal operation, only one sludge grinder is required to be in operation. The second grinder is provided as a standby unit.

Each sludge grinder is provided with an ON/OFF push button, a RESET push button, and overload and run indicating lights all located at the Sludge Grinder Control Panel on MCC-503. A run indicating light is provided for the sludge grinders at the Sludge Dewatering Building Control Panel (SDBCP). An ON/OFF/TEST push button station with locking device for the off position is located at each unit.

Under normal operation, when the ON push button is depressed, the sludge grinder will operate continuously.

(3) START-UP AND SHUTDOWN PROCEDURES

To start up and shut down the Sludge Grinder Equipment, use the following procedures:

a. START-UP

- Close the circuit breaker on MCC-503
- Make sure that the ON push button at the unit is depressed
- Depress the START push button at the appropriate Sludge Grinder Control Panel on MCC-503

b. Shutdown

- Depress the OFF push button at the appropriate Sludge Grinder Control Panel on MCC-503

NOTE

If maintenance is to be performed on a sludge grinder, open the circuit breaker on MCC-503, depress the OFF push button on the appropriate Sludge Grinder Control Panel and engage the locking device. Follow approved **Lockout/Tagout** procedures (See Chapter VI, Safety).

(4) ALTERNATE OPERATION

If both of the sludge grinders are not able to operate, or if they are not required, the bypass valve may be opened so the digested sludge may bypass both grinders and flow directly to the sludge feed pumps (Refer to Figure III-SD-SDR--1).

(5) MONITORS AND ALARMS

Each Sludge Grinder Control Panel is designed to sense an overload condition and automatically responds by momentarily reversing the direction of rotation. Grinder shutdown will occur in response to the overload condition after reversing its direction three times. An audible and visual alarm indication is provided on the annunciator of the SDBCP for Grinder Overload shutdown.

D. SLUDGE FEED PUMPING EQUIPMENT SDB-SFP-1, 2, 3, 4, 5, 6, 7 AND 8

(1) DESCRIPTION

The sludge feed pumps are provided to pump combined anaerobically digested primary and aerobically digested waste activated sludge to the belt filter press equipment. (See Figure III-SD-SDR-1)

The Sludge Feed Pumping Equipment consists of eight sludge feed pumps, designated SDB-SFP-1, 2, 3, 4, 5, 6, 7 and 8, associated variable speed drives, drive motors and controls.

The 5 hp sludge feed pumps are single stage, progressive cavity, self-priming, positive displacement, non-clogging type pumps. Each sludge feed pump has a rated flow capacity of 10 gpm to 150 gpm at a total discharge pressure of 20 psig and maximum pump speed of 430 rpm. The sludge feed pumps in the Sludge Dewatering Building are operated and controlled from the Sludge Feed Pump Control Panel (SFPCP) or from the Sludge Dewatering Building Control Panel (SDBCP).

The Sludge Feed Pump Control Panel (SFPCP) is equipped with an AUTO/BYPASS selector switch, a LOCAL/REMOTE speed control selector switch, START and STOP push buttons, a RESET push button, a speed potentiometer, speed indicator, an elapsed time meter, and LOCAL/ REMOTE speed control and sludge pump RUN and TRIP indicating lights.

The Sludge Dewatering Building Control Panel (SDBCP) is equipped with a speed potentiometer, a speed indicator, pump RUN indicating light, and LOCAL/REMOTE speed control indicating lights.

Each sludge feed pump is equipped with an ON/OFF-LOCKOUT push button, a high discharge pressure switch and a low seal water pressure switch at the unit.

(2) NORMAL OPERATION

The sludge feed pump equipment is controlled from the SFPCP in the Electrical Room and the SDBCP in the Control Room of the Sludge Dewatering Building. The sludge feed pumping equipment is operated only when sludge is to be fed to the belt filter presses.

All pumping units are operable in two modes. Under normal operation, when the BYPASS/AUTOMATIC selector switch on the SFPCP is set in the AUTOMATIC mode, the associated pump will start and stop automatically in accordance with logic sequence signals from an associated belt filter press control panel when preconditions described under the subsection headed "Belt Filter Press Equipment" are satisfied.

Under normal operation, when the SFPCP selector switch is in the REMOTE position, sludge feed pump speed control is manually adjustable from the speed potentiometer located on the Sludge Dewatering Building Control Panel (SDBCP).

(3) START-UP AND SHUTDOWN PROCEDURES

To start up and shutdown the sludge feed pumping equipment, use the following procedures:

a. START-UP

- Open manually operated valves on the intake and discharge sides for the appropriate sludge feed pump to direct sludge flow to a selected belt filter press.

- Close the circuit breaker on MCC-503 to energize the SFPCP

- Place the AUTO/BYPASS selector switch on the SFPCP in the AUTO position

- Place the LOCAL/REMOTE selector switch on the SFPCP to the REMOTE position allowing feed pump control at SDBCP in the Control Room of the Sludge Dewatering Building

- Start up the associated belt filter press

NOTE

Sludge feed pumps will start up automatically after the belt filter press start-up preconditions have been satisfied. Refer to the subsection headed "Belt Filter Press Equipment" for belt filter press start-up and shutdown procedures.

- Adjust pumping rate to desired sludge flow with SDBCP mounted speed potentiometer

b. SHUTDOWN

- Shutdown the associated belt filter press as described under the subsection headed "Belt Filter Press Equipment".

NOTE

If maintenance is to be performed on a sludge feed pump, open the circuit breaker on the SFPCP, depress the STOP push button at the pump and engage the locking device. Follow approved **Lockout/Tagout** procedures (See Chapter VI, Safety).

A sludge pump failure and shutdown will automatically shutdown the associated belt filter press, flocculator tank mixer and polymer feed pump.

(4) ALTERNATE OPERATION

An alternate mode of operation is permitted when the BYPASS/AUTOMATIC selector switch is set in the BYPASS mode. The associated pumping unit is started and stopped manually from the SFPCP by means of a START/STOP push button and the JOG/RUN selector switch which is enabled in the BYPASS mode. When the JOG/RUN selector switch is in the JOG mode, the START push button must be held depressed to operate the pump. In the RUN mode, after the START push button has been depressed, the pump will operate continuously.

WARNING

Operation of a sludge feed pump in the BYPASS mode isolates the pump from the protective interlock shutdown control as described for normal operation.

When the LOCAL/REMOTE selector switch on the SFPCP is in the LOCAL position, pump speed control is manually adjustable from the speed potentiometer on the SFPCP.

(5) MONITORS AND ALARMS

Each sludge feed pump is provided with RUN and LOCAL/REMOTE speed control indicating lights on the SFPCP and the SDBCP. Audible and visual alarm functions on the SDBCP annunciator include a fault/trip, high discharge pressure and low seal water pressure for each pump.

Each sludge feed pump is equipped with a pressure gauge on its suction pipe and a pressure gauge and pressure switch on its discharge pipe. A pressure switch is also provided on the seal water supply pipe to each sludge feed pump. Sludge pumps automatically shut down on high discharge pressure and motor overload. Sludge pumps continue to run on low seal water pressure.

Variable speed drive controller failure is indicated at the SFPCP.

NOTE

Shutdown of any associated dewatering equipment (i.e., belt filter press, polymer feed pump or conveyors) operating in the automatic mode will initiate automatic shutdown of all associated dewatering equipment that is operating within the electrically interlocked control system.

E. LIQUID POLYMER STORAGE, HANDLING AND FEED EQUIPMENT

(1) GENERAL

The Liquid Polymer Storage, Handling and Feed Equipment is provided to store full strength liquid polymer, to automatically make up batches of diluted polymer solution and to feed polymer into the sludge feed piping ahead of the belt filter press equipment (see Figure III-SD-SDR-2 Liquid Polymer Diagram).

Equipment consists of the following major components:

- Two Liquid Polymer Storage Tanks SDB-LPS-1 and SDB-LPS-2
- Two Liquid Polymer Dilution Units SDB-PDU-1 and SDB-PDU-2
- One Liquid Polymer Aging Tank SDB-PAT-1
- One Liquid Polymer Aging Tank Mixer SDB-ATM-1
- One Liquid Polymer Day Tank SDB-PDT-1
- One Liquid Polymer Day Tank Mixer SDB-DTM-1
- One Liquid Polymer Transfer Pump SDB-PTP-1
- One Diluted Polymer Transfer Pump SDB-DPT-1
- Eight Polymer Feed Pumps SDB-PFP-1, SDB-PFP-2, SDB-PFP-3, SDB-PFP-4, SDB-PFP-5, SDB-PFP-6, SDB-PFP-7, and SDB-PFP-8
- Six secondary dilution water panels

Liquid polymer is delivered by tank truck and stored in the Sludge Dewatering Building in two 2,000-gallon storage tanks. A transfer pump is provided to transfer liquid polymer from one storage tank to the other or for hydraulic mixing. Two liquid polymer dilution units are provided. Each unit is provided to automatically mix the full strength liquid polymer from the storage tanks with water to provide batches of diluted polymer at a desired solution concentration. The polymer solution is stored in the 750-gallon polymer aging tank until needed and then is automatically transferred to the 750-gallon polymer day tank. The batching operation is automatically started and stopped by level controls mounted in the polymer aging tank and polymer day tank.

(2) LIQUID POLYMER STORAGE TANKS SDB-LPS-1 AND 2

a. DESCRIPTION

Each 2,000-gallon liquid polymer storage tank is constructed of translucent fiber glass reinforced plastic with closed top and dished bottom. Each tank is 6 feet 7 inches in diameter with an overall height of 13 feet.

(3) LIQUID POLYMER DILUTION UNITS SDB-PDU-1 AND 2

a. DESCRIPTION

Each of the two Liquid Polymer Dilution Units are provided to automatically prepare a dilute liquid polymer solution by mixing full strength liquid polymer from the liquid polymer storage tanks discussed hereinbefore with a preset amount of water to supply a liquid polymer solution having a full strength polymer concentration in the range of 0.12 percent to 1.0 percent.

Each liquid polymer dilution unit consists of the following major components:

- One solution recirculation pump
- One undiluted polymer metering pump with manual speed potentiometer
- One mixing block
- One water flow controller valve
- One magnetically driven water meter

b. NORMAL OPERATION

Each liquid polymer dilution unit is operated and controlled from the control panel mounted at the unit. HAND/OFF/AUTO selector switches for the polymer pump are provided on each control panel.

Under normal operation, when the HAND/OFF/AUTO selector switch is in the AUTO position, the liquid polymer dilution unit will automatically start up and prepare the dilute activated liquid polymer solution and automatically shut down based on a signal from liquid level float switches in the polymer aging tank.

c. START-UP AND SHUTDOWN PROCEDURES

To start up and shut down the liquid polymer dilution units, use the following procedures:

1. Start-Up

- Open the manually operated valves between the liquid polymer storage tanks and the selected liquid polymer dilution unit, and between the liquid polymer aging tank and liquid polymer dilution unit, and between the liquid polymer aging tank and liquid polymer day tank.

- Close the circuit breaker on the selected liquid polymer dilution control panel mounted on the liquid polymer dilution unit

- Place the HAND/OFF/AUTO selector switch on the liquid polymer dilution unit control panel in the AUTO position

2. Shutdown

- Place the HAND/OFF/AUTO selector switch on the liquid polymer dilution unit control panel in the OFF position

d. MONITORS AND ALARMS

Each liquid polymer dilution unit is provided with indicating lights for ON and FILL on the unit mounted control panel.

Each liquid polymer dilution unit control panel is provided with a visual alarm and automatic shutdown for dilution water flow loss and liquid polymer flow loss.

Each liquid polymer dilution unit is provided with an audible and visual alarm on the Sludge Dewatering Building Control Panel annunciator for System Failure.

(4) LIQUID POLYMER AGING TANK SDB-PAT-1 AND LIQUID POLYMER DAY TANK SDB-PDT-1

a. DESCRIPTION

The liquid polymer aging tank and liquid polymer day tank are each constructed of translucent fiber glass reinforced plastic with a 750-gallon capacity. Each tank has a 5-foot diameter, a straight shell height of 6 feet, an open top and a dished bottom.

Each tank is provided with liquid level floats to initiate automatic operation of the liquid polymer dilution units and the diluted polymer transfer pump.

b. MONITORS AND ALARMS

Liquid level float switches are installed in each tank to provide system high and low level alarms and to provide start and stop controls for the liquid polymer dilution units and the diluted polymer transfer pump.

Audible and visual alarms are provided on the Sludge Dewatering Building Control Panel annunciator for:

- Liquid Polymer Aging Tank High Level
- Liquid Polymer Day Tank High Level
- Liquid Polymer Day Tank Low Level

(5) LIQUID POLYMER AGING TANK MIXER SDB-ATM-1 AND LIQUID POLYMER DAY TANK MIXER SDB-DTM-1

a. DESCRIPTION

The 750-gallon liquid polymer aging tank and 750-gallon liquid polymer day tank are each provided with a top-mounted mixer to keep the liquid polymer thoroughly mixed. The mixer propellers are gear driven at 350 rpm by a 1/2-hp motor.

b. NORMAL OPERATION

A HAND/OFF/AUTO selector switch, a cycle timer, an elapsed time meter and a red running light are provided for each mixer on MCC-503. Each mixer is provided with ON/OFF push buttons with a lockout device for the OFF position and a TEST push button located at the mixer.

Under normal operation with the HAND/OFF/AUTO selector switch is in the AUTO position, each unit will operate intermittently, actuated by the cycle timer. Each timer has an adjustable range of 10 minutes to 10 hours.

c. START-UP AND SHUTDOWN PROCEDURES

To start up and shut down the mixers, use the following procedures:

1. Start-Up
   - Close the selected mixers' circuit breaker on MCC-503
   - Depress the ON push button at the mixer
   - Set the timer for each mixer to the desired mixing time
   - Place the HAND/OFF/AUTO selector switch for each unit in the AUTO position

2. Shutdown
   - Place the HAND/OFF/AUTO selector switch at the control panel in the OFF position or depress the OFF push button at the unit

NOTE

The mixers will run continuously when the HAND/OFF/AUTO selector switch is in the HAND position.

If maintenance is to be performed on a mixer, open the circuit breaker on MCC-503, depress the OFF push button at the unit and engage the locking device. Follow approved **Lockout/Tagout** procedures (See Chapter VI, Safety).

d. MONITORS AND ALARMS

An operational indicating light and an elapsed time meter for each mixer is provided on MCC-503.

(6) LIQUID POLYMER TRANSFER PUMP SDB-PTP-1

a. DESCRIPTION

The liquid polymer transfer pump is provided to transfer undiluted polymer from a liquid polymer storage tank back to the same tank for mixing or to the other tank.

The 5-hp pump, designated SDB-PTP-1, is a constant speed, single stage, low shear, nonclogging, progressive cavity, positive displacement type pump. The pump has a rated capacity of 25 gpm at a discharge head of 93 feet at a pump speed of 248 rpm.

The pump is provided with a RESET push button, START/STOP push buttons, a red running light and an elapsed time meter on MCC-503.

b. NORMAL OPERATION

Under normal operation, when the START push button is depressed, the pump will operate continuously.

c. START-UP AND SHUTDOWN PROCEDURES

To start up and shut down the polymer transfer pump, use the following procedures:

1. Start-Up
   - Close the circuit breaker on MCC-503
   - Depress the START push button on MCC-503

2. Shutdown
   - Depress the STOP push button at the unit or the STOP push button on MCC-503

NOTE

If maintenance is to be performed on the liquid polymer transfer pump, open the circuit breaker on MCC-503 and depress the OFF button at the unit and engage the locking device. Follow approved **Lockout/Tagout** procedures (See Chapter VI, Safety).

d. MONITORS AND ALARMS

An operational indicating light and an elapsed time meter are provided on MCC-503. Visual and audible alarms are provided on the SDBCP annunciator panel for high pump discharge pressure and fault/trip.

(7) DILUTED POLYMER TRANSFER PUMP SDB-DPT-1

a. DESCRIPTION

The Diluted Polymer Transfer Pump is provided to pump the diluted polymer solution from the aging tank to the day tank.

The 3-hp pump, designated SDB-DPT-1, is a constant speed, single stage, low shear, nonclogging, progressive cavity, positive displacement type pump. The pump has a rated capacity of 50 gpm at a discharge head of 23 feet at a pump speed of 244 rpm.

The pump is provided with ON/OFF push buttons with locking device for the OFF position and TEST/MANUAL/OFF selector switch at the pump. The pump is provided with a AUTO/OFF/TEST/MANUAL selector switch, an elapsed time meter, a RUN indicating light, and a RESET push button on MCC-503.

b. NORMAL OPERATION

Under normal operation, when the AUTO/OFF/TEST/MANUAL selector switch is in the AUTO position, the pump will start and stop automatically based on preset liquid levels (sensed by float switches) in the aging and day tanks.

c. START-UP AND SHUTDOWN PROCEDURES

To start up and shutdown the diluted polymer transfer pump, use the following procedures:

1. Start-Up
   - Close the circuit breaker on MCC-503
   - Place the AUTO/OFF/TEST/MANUAL selector switch on MCC-503 in the AUTO position

2. Shutdown
   - Depress the STOP push button at the unit or place the AUTO/OFF/TEST/MANUAL switch on MCC-503 in the OFF position

NOTE

If maintenance is to be performed on the diluted polymer transfer pump, open the circuit breaker at the control panel, depress the OFF push button and engage the locking device at the unit. Follow approved **Lockout/Tagout** procedures (See Chapter VI, Safety).

d. ALTERNATE OPERATION

The diluted polymer transfer pump may be operated manually by placing the AUTO/OFF/TEST/MANUAL selector switch on MCC-503 in the TEST/MANUAL position. In manual operation, the pump operates continuously.

e. MONITORS

The diluted polymer transfer pump is provided with a red running indictor light and an elapsed time meter on MCC-503. A running indicator light is also provided at the SDBCP.

Visual and audible alarms are provided on the SDBCP annunciator for fault TRIP, high discharge pressure and diluted polymer transfer pump shutdown on high liquid polymer day tank level.

(8) POLYMER FEED PUMPS SDB-PFP-1, 2, 3, 4, 5, 6, 7 AND 8

a. DESCRIPTION

The polymer feed pumps are provided to pump diluted polymer solution from the liquid polymer day tank to the belt filter press equipment.

The Polymer Feed Pumps, designated SDB-PFP-1, SDB-PFP-2, SDB-PFP-3, SDB-PFP-4, SDB-PFP-5, SDB-PFP-6, SDB-PFP-7 and SDB-PFP-8, are variable speed, single stage, low shear, nonclogging, progressive cavity type positive displacement pumps. Each pump has a capacity of 0.5 to 7.0 gallons per minute at a discharge pressure of 30 psig when pumping a one percent polymer solution.

The Polymer Feed Pump Control Panel (PFPCP) is equipped with a AUTO/BYPASS selector switch, a LOCAL/REMOTE speed control selector switch, START and STOP push buttons, a RESET push button, a speed potentiometer, speed indicator, an elapsed time meter, and LOCAL-/REMOTE speed control and polymer pump RUN and TRIP indicating lights.

The Sludge Dewatering Building Control Panel (SDBCP) is equipped with a speed potentiometer, a speed indicator, pump RUN indicating light, and LOCAL/REMOTE speed control indicating lights.

Each polymer feed pump is equipped with an ON/OFF-LOCKOUT push button and a high discharge pressure switch at the unit.

The quantity of polymer required in terms of pounds of polymer per ton of sludge solids is dependent upon the type of polymer used, the condition of the sludge and the desired sludge cake solids concentration. Application of polymer will be based on the operator's observation of the reaction of the sludge to the polymer as it is applied at the belt filter press. However, after the quantity of polymer per ton of sludge solids is determined the full strength (neat) polymer feed rate can be determined as follows:

1. Select sludge pumping rate (X) in gpm.
2. Observe sludge density (Y) in percent solids (Laboratory Analysis)
3. Polymer feed rate (Q) is:

$$Q = \frac{XY}{2{,}000} \times P$$

Where: P = polymer application in 100 lbs/ton sludge solids
i.e. P = 1.0 for applying 100 lbs polymer/ton sludge solids

4. Example: Sludge pumping rate, X = 100 gpm
Sludge density, Y = 5 percent solids
Desired polymer application,

P = 20 lbs/ton sludge solids

$$Q = \frac{100 \times 5}{2{,}000} \times 0.2 = 0.05 \text{ gpm neat polymer}$$

Then, if diluted polymer in the day tank is a 1.0 percent solution:

$$\text{Polymer feed pump rate} = \frac{0.05}{.01} = 5 \text{ gpm}$$

b. NORMAL OPERATION

The polymer feed pump equipment is controlled from the PFPCP in the Electrical Room and the SDBCP in the Control Room of the Sludge Dewatering Building. The polymer feed pump equipment is operated only when polymer is to be fed to a belt filter press.

All pumping units are operable in two modes. Under normal operation, when the AUTO/BYPASS selector switch on the PFPCP is set in the AUTO mode, the associated pump will start and stop automatically in accordance with logic sequence signals from an associated belt filter press control panel when preconditions described under the subsection headed "Belt Filter Press Equipment" are satisfied.

Under normal operation, when the PFPCP selector switch is in the REMOTE position, polymer feed pump speed control is manually adjustable from the speed potentiometer located on the Sludge Dewatering Building Control Panel (SDBCP).

c. START-UP AND SHUTDOWN PROCEDURES

To start up and shutdown the polymer feed pumping equipment, use the following procedures:

1. Start-Up

- Open manually operated valves on the intake and discharge sides for the appropriate polymer feed pumps to direct polymer flow to a selected belt filter press
- Close the circuit breaker on MCC-503 to energize the PFPCP
- Place the AUTO/BYPASS selector switch on the PFPCP in the AUTO position
- Place the LOCAL/REMOTE selector switch on the PFPCP to the REMOTE position allowing feed pump speed control at SDBCP in the Control Room of the Sludge Dewatering Building
- Start up the associated belt filter press

NOTE

Polymer feed pumps will start up automatically after the belt filter press startup preconditions have been satisfied.

Refer to the subsection headed "Belt Filter Press Equipment" for belt filter press start-up and shutdown procedures.

- Adjust pumping rate to desired polymer flow with SDBCP mounted speed potentiometer

d. SHUTDOWN

- Shutdown the associated belt filter press as described under the subsection headed "Belt Filter Press Equipment"

NOTE

If maintenance is to be performed on a polymer feed pump, open the circuit breaker on the PFPCP, depress the STOP push button at the pump and engage the locking device. Follow approved **Lockout/Tagout** procedures (See Chapter VI, Safety).

A polymer pump failure and shutdown will automatically shutdown the associated belt filter press, flocculator tank mixer and sludge feed pump.

e. ALTERNATE OPERATION

An alternate mode of operation is permitted when the BYPASS/AUTOMATIC selector switch is set in the BYPASS mode. The associated pumping unit is started and stopped manually from the PFPCP by means of a START/STOP push button and the JOG/RUN selector switch which is enabled in the BYPASS mode. When the JOG/RUN selector switch is in the JOG mode, the START push button must be held depressed to operate the pump. In the RUN mode, after the START push button has been depressed, the pump will operate continuously.

WARNING

Operation of the polymer feed pump in the BYPASS mode isolates the pump from the protective interlock shutdown control as described for normal operation.

When the LOCAL/REMOTE selector switch on the PFPCP is in the LOCAL position, pump speed control is manually adjustable from the speed potentiometer on the PFPCP.

f. MONITORS AND ALARMS

Each polymer feed pump is provided with RUN and LOCAL/REMOTE speed control indicating lights on the PFPCP and the SDBCP. Audible and visual alarm functions on the SDBCP annunciator include a fault/trip and high discharge pressure for each pump.

Each polymer feed pump is equipped with a pressure gauge on its suction pipe and a pressure gauge and pressure switch on its discharge pipe. Polymer pumps automatically shut down on high discharge pressure and motor overload.

Variable speed drive controller failure is indicated at the PFPCP.

NOTE

Shutdown of any associated dewatering equipment (i.e., belt filter press, sludge feed pump or conveyors) operating in the automatic mode will initiate automatic shutdown of all associated dewatering equipment that is operating within the electrically interlocked control system.

(9) SECONDARY DILUTION WATER PANELS

a. DESCRIPTION

The Six Secondary Dilution Water Panels are provided to support a static mixer, a rotameter, and piping for the secondary dilution of the polymer solution pumped by the polymer feed pumps. Secondary dilution water is added to further dilute the polymer solution to insure adequate dispersion into the liquid sludge to promote uniform floc formation.

b. NORMAL OPERATION

Under normal operation, when a belt filter press is started up, a contact closure from the associated Local Press Control Panel will energize a solenoid valve in the effluent water line which supplies dilution water to the secondary dilution water panel. A valve and rotameter on the panel are provided to permit manual adjustment of the water flow rate.

F. BELT FILTER PRESS EQUIPMENT SDB-BFP-4, 5 AND 6

(1) DESCRIPTION

The Belt Filter Press Equipment is provided to dewater a mixture of anaerobically digested primary sludge and aerobically digested waste activated sludge into a sludge cake consistency that is reduced in volume, easily removed from the press and conveyor, and easy to handle and transport.

The Belt Filter Press Equipment consists of the belt filter presses with flocculation drums, spray wash systems, drainage pans and piping, Local Press Control Panel (LPCP), and the Belt Filter Press Control Panel (BFPCP).

Each belt filter press has two continuous dewatering filter belts, each two meters wide, arranged to provide both a gravity drainage zone, a pressure zone, and a high pressure zone.

Each sludge-polymer flocculation drum is provided with an internal mixing device for mixing and flocculation of sludge with polymer prior to discharging the flocculated sludge to the gravity dewatering zone of the belt filter press.

Spray wash systems are provided for each pressure dewatering belt. Each spray wash system consists of a spray water header, valving, self-cleaning brush, non-clogging nozzles and hood enclosures. The built-in brush for the nozzle cleaning is provided with hand wheel operation from the outside of the belt filter press frame.

The six belt filter press control panels, BFPCP, located in the Electrical Room, provide the electrical equipment and devices to control and monitor the operation of the six belt presses, the flocculation drum equipment, the spray water valves and the dilution water valves.

The Local Press Control Panels (LPCP) are provided at the unit and are the primary control when the LOCAL/REMOTE selector switch on the BFPCP is in the REMOTE position.

(2) NORMAL OPERATION

The belt filter press equipment is controlled from either the press's BFPCP in the Electrical Room or the Local Press Control Panel (LPCP) on the press unit (typical for all six presses). Automatic operation of the belt filter presses infers that the associated electrically interlocked sludge dewatering equipment is in automatic mode and that the preconditions for each press have been satisfied.

The Sludge Dewatering Equipment interlocked electrically with the BFPCP of the belt filter press is:

- Associated Sludge Conveyors
- Associated Sludge Feed Pumps
- Associated Polymer Feed Pumps
- Air System (Pressure)
- Hydraulic System (Pressure)

The BFPCP is equipped with a LOCAL/REMOTE/AUTO/OFF selector switch. The local position allows manual control at the BFPCP. The remote position allows manual control at the LPCP. Either of the LOCAL or REMOTE positions put the belt filter press in a manual mode and therefore will not initiate automatic operation of the associated interlocked sludge dewatering equipment listed above.

The LPCP is provided with a RUN/JOG selector switch. With the LOCAL/REMOTE/AUTO/OFF selector switch on the BFPCP in the REMOTE position and the RUN/JOG selector switch on the LPCP in the JOG position, the belt filter press is able to be run in forward and reverse directions. The press may be jogged in the forward or reverse directions by depressing the JOG push buttons on the LPCP.

The automatic mode of belt filter press operation is initiated by placing the BYPASS/AUTO selector switch on the BFPCP in the AUTO position. In the BYPASS position the belt filter press may be test run without the associated belt conveyors running.

When the BFPCP selector switch is in the AUTO position and the PROGRAMMED START push button is depressed, the spray water valve, the press drive, the flocculator drive, the dilution water valve, and the selected sludge and polymer pumps are energized in sequence. Failure of any equipment to start or fault condition will not allow start up of the polymer feed pump or the sludge feed pump.

Each group of three belt filter presses are interlocked with associated sludge conveyors. The belt filter presses will not start or run in the automatic mode unless the associated sludge conveyors have been started. Associated units are as follows:

- For Belt Filter Presses SDB-BFP-1, 2 and 3; Conveyors SDB-SC-1A, SDB-SC-1B and TLA-SC-1

- For Belt Filter Presses SDB-BFP-4, 5 and 6; Conveyors SDB-SC-2A, SDB-SC-2B and TLA-SC-2

(3) START-UP AND SHUTDOWN PROCEDURES

To start up and shut down the belt filter presses in the automatic mode, use the following procedures:

a. START-UP

- Start the sludge conveyors associated with the press(es) to be used

- Manually select the valves for the sludge and polymer pumps to be used as described under the sections headed "Sludge Feed Pumping Equipment" and "Polymer Feed Pumps" and place the Sludge Feed Pump and Polymer Feed Pump indicator selector switches on the BFPCP to the I.D. number of the selected pumps

- Check to see if POWER ON lights are on and the EMERGENCY STOPS are reset

- Move BYPASS/AUTO selector switch on each BFPCP to the AUTO position

- Check the fault lights for Low Air and Hydraulic Pressures, Screen Overrun and Broken Screen; they should be OFF

- Also check that the HIGH PRESS FEED LEVEL fault light is OFF. The press cannot start in the Auto Mode if the feed box level is high. It will be necessary to correct this condition under Manual Mode

- Set all valve selector switches to CLOSE

- Set the LOCAL/REMOTE/AUTO/OFF selector switch to the AUTO position

- Press the AUTOMATIC PROGRAM START push button. Its amber light will illuminate to indicate that the press will run. At this point the BFPCP will control the subsequent operation of the press without the operator's assistance

- The spray water valve opens immediately

- When the water pressure reaches its normal level, the press drive will start and the pre-wetting time cycle commences. The screens will be wetted for the time preset by the pre-wetting time cycle timer ("TR1")

- When the pre-wetting time cycle expires, the following takes place immediately:
  - The flocculator drive starts
  - The dilution water valve opens

- The selected sludge pump is enabled
- The selected polymer feed pump is enabled

NOTE

If either of the associated sludge or polymer feed pump AUTO/BYPASS selector switches on the SFPCP and PFPCP, respectively, are set on BYPASS, neither feed pump will be enabled as indicated above. In addition, if a pump selection is duplicated on two different BFPCPs, neither belt filter press will complete its startup

- The normal automatic operation green pilot will turn ON. Automatic operation is attained when the press and its related equipment are in full operation

b. SHUTDOWN

NOTE

The normal shutdown provides an orderly means of shutting down the press and related equipment. It is activated by pressing the PROGRAMMED SHUTDOWN push button. It is also activated by low flow in the Sludge or Polymer Feed Pump. In either case, its red light will illuminate to indicate that a programmed shutdown is in progress. At this time, both the PROGRAMMED START-UP and NORMAL AUTOMATIC OPERATION lights turn off and the following sequence of events occurs.

- The selected sludge and polymer feed pumps stop immediately and the shutdown cycle timer is activated. The preset time of the shutdown cycle time should be equal to the amount of time that it takes to evacuate the sludge from the feed box and flocculator tank plus the time necessary to wash the screens after the sludge is discharged

- When the shutdown cycle times out, the press drive and related equipment are stopped and valves are closed.

(4) ALTERNATE OPERATION

The belt filter press equipment can also be operated in the manual mode. To start up and shut down the belt filter presses in manual mode, use the following procedures:

a. START-UP

- Check to see if POWER ON light is on and all EMERGENCY STOP push buttons are reset

- Check the fault lights to make sure that air and hydraulic pressures are normal and the screens are not overrun or broken. These lights should be off

- Set all valve selector switches to the CLOSE position

- Set the LOCAL/REMOTE/AUTO/OFF selector switch on the BFPCP to the LOCAL or REMOTE position

NOTE

When LOCAL position is selected, the operator controls at the BFPCP are enabled. When REMOTE is selected, the operator controls at the LPCP are enabled.

- Set the spray water valve selector switch to the OPEN position. Its amber pilot light will turn ON to indicate that the valve is energized to open

- Start the sludge discharge conveyors associated with the press being started

- Check the water pressure fault light to make sure that it is OFF, indicating that the water pressure is normal. Press the START push button for the press drive. Its amber pilot light will turn ON to indicate that the press controller is energized to run in its forward direction

- The press will now be running and spray water will be pre-wetting its screens. Wait three to five minutes until the screen is fully pre-wetted before proceeding

WARNING

Pumping sludge before proper pre-wetting may result in damaged screens.

- Press the START push button for the flocculator drive. Its amber pilot light will turn ON to indicate that the flocculator drive controller is energized to run

- Select and start the associated sludge and polymer feed pumps and place the dilution water valve selector switch to the OPEN position. Its amber pilot light will turn ON to indicate that the valve is energized to open.

WARNING

In this mode of operation electrically interlocked safety shutdown controls are disabled and a malfunction occurring on an associated dewatering equipment component such as a feed pump will NOT shutdown other associated equipment.

b. SHUTDOWN

- Stop the corresponding sludge and polymer feed pumps.
- Set the dilution water valve selector switch to the CLOSE position.
- Wait approximately 10 minutes until all sludge is evacuated from the system
- Press the STOP push button for the flocculator drive.
- Allow the remaining equipment to run for another 10 to 15 minutes, or until the press screens are fully washed
- Press the STOP push button for the press drive. Set the spray water valve selector switch to the CLOSE position
- Hose down all sludge presses and conveyors to remove all sludge from the machinery

c. PRESS DRIVE JOGGING OPERATION

The press jogging operation is used to allow the operator to maintain or replace the press screens. In order to utilize the option, place the LOCAL/REMOTE/AUTO/OFF selector switch on the BFPCP in the REMOTE position. In order to jog the press air and hydraulic pressures must be normal. The press is jogged in the forward and reverse directions from the JOG push buttons located in the LPCP.

d. BYPASS MODE OPERATION

The bypass mode operation is used to test run the belt filter presses without running the associated sludge discharge conveyors, sludge feed pump, and polymer feed pump. In order to utilize this option, the LOCAL/REMOTE/AUTO/OFF selector switch in the BFPCP must be set to AUTO. The BYPASS/AUTO selector switch in the BFPCP must be set to BYPASS. The operation will be as previously described for automatic operation, except the sludge discharge conveyors may be off and the associated sludge and polymer feed pumps will not run.

e. NON-PROGRAMMED AND EMERGENCY SHUTDOWN

When either non-programmed or emergency shutdown occur, all the controlled drives are stopped and all of the controlled valves are closed.

Non-Programmed Shutdown takes place when any of the following conditions occur:

- Screen overrun
- Broken screen
- Sludge discharge conveyor stoppage
- Low air pressure when the press is already running
- Low hydraulic pressure when the press is already running

- Low water pressure when the press is already running

Emergency shutdown takes place when any of the following conditions occur:

- The operator presses the red mushroom head push button on the LPCP
- The operator presses the red mushroom head push button on the BFPCP
- The operator pulls the trip cord at the press

The screen tracking solenoid valves remain energized if their corresponding tracking limit switch is operated. Motorized valves are energized to close.

(5) MONITORS AND ALARMS

Each Belt Filter Press is provided with monitoring on its LPCP, BFPCP, and the SDBCP.

THE LPCP is provided with pneumatic and hydraulic pressure gauges for upper and lower screens and for the high pressure zone.

The BFPCP is provided with the following indicating lights and audible and visual alarm functions:
Electrical "POWER ON" white pilot light

- Spray water valve energized amber pilot light
- Press drive energized amber pilot light
- Flocculator drive energized amber pilot light
- Dilution water valve energized amber pilot light
- Water pressure fault light
- Hydraulic pressure fault light
- Overrun screen fault light
- Broken screen fault light
- Emergency stop fault light
- Low air pressure fault light
- Press drive failure fault light
- Flocculator drive failure fault light
- High feed box level fault light

An alarm horn (with silence push button) is provided on each BFPCP and is energized upon occurrence of any fault condition.

The BFPCP has the monitoring devices listed below associated with automatic operation of the belt filter presses:

- Automatic program start amber pilot light
- Normal automatic operation green pilot light
- Programmed shutdown red pilot light

- Incomplete start-up fault light

The Sludge Dewatering Building Control Panel is equipped with a RUN indicating light for each belt filter press and a common alarm for belt filter press malfunction or failure is provided in the SDBCP annunciator.

G. SLUDGE CONVEYOR EQUIPMENT SDB-SC-1A, 2A, 1B AND 2B, TLA-SC-1 AND 2, AND TLA-STC-1

(1) GENERAL

The Sludge Conveyor Equipment in the Sludge Dewatering Building and Truck Loading Area is provided to transport the dewatered sludge from the belt filter press equipment to the truck loading area or the dried sludge storage area (Refer to Figure III-SD-SDR--1 Sludge Dewatering Diagram).

(2) DESCRIPTION

a. CONVEYORS SDB-SC-1A AND 2A

Conveyors, designated SDB-SC-1A and SDB-SC-2A, transport sludge from the belt filter presses to the inclined conveyors SDB-SC-1B and SDB-SC-2B, respectively.

Belt conveyors SDB-SC-1A and SDB-SC-2A are each 24 inches wide, horizontal, with a 20-degree trough. Each dewatered sludge conveyor has a 3 hp motor running at 1800 rpm to transport a capacity of 10 tons per hour at a 100 fpm belt speed.

Each conveyor is equipped with continuous skirt plates along each side of the belt.

b. CONVEYORS SDB-SC-1B AND 2B

Conveyors, designated SDB-SC-1B and SDB-SC-2B, transport sludge from conveyors SDB-SC-1A and SDB-SC-2A, respectively, up to conveyors TLA-SC-1 and TLA-SC-2, respectively.

Belt conveyors SDB-SC-1B and SDB-SC-2B are each 24 inches wide, inclined, with a 20-degree trough. Each sludge conveyor has a 3 hp motor running at 1800 rpm to transport a capacity of 10 tons per hour at a 100 fpm belt speed.

Each inclined conveyor is equipped with hinged weather covers above the conveyor belt from the Sludge Dewatering Building to the Truck Loading Area Building.

Skirt plates are provided on each conveyor belt at the lower end transfer location.

c. CONVEYORS TLA-SC-1 AND 2

Conveyors, designated TLA-SC-1 and TLA-SC-1, transport sludge from conveyors SDB-SC-1B and SDB-SC-2B, respectively, to the truck loading chutes or to the sludge transfer conveyor, TLA-STC-1.

Belt conveyors TLA-SC-1 and TLA-SC-2 are each 24 inches wide, horizontal, with no trough. Each sludge conveyor has a 2 hp, constant speed motor running at 1800 rpm to transport a capacity of 10 tons per hour at a 100 fpm belt speed.

Each conveyor is equipped with wind hoops and a skirt plate on both sides for its full length.

Each conveyor is equipped with two pneumatically operated belt plows to direct the sludge into a chute. Each conveyor is equipped with three chutes. The chutes will direct the dewatered sludge into a truck or on to the transfer conveyor. One chute is located below each pneumatically operated belt plow and the third chute is located at the end of the conveyor belt.

d. CONVEYOR TLA-STC-1

The conveyor, designated TLA-STC-1, is provided to transport dewatered sludge received from conveyors TLA-SC-1 and TLA-SC-2 to the dried sludge storage area.

The belt conveyor TLA-STC-1 is 24 inches wide, horizontal, with a 20-degree trough. The transport conveyor has a 3 hp motor running at 1800 rpm to transport a capacity of 10 tons per hour at a 100 fpm belt speed.

The conveyor is equipped with hinged weather covers and a skirt plate on both sides for its full length.

(3) NORMAL OPERATION

a. CONVEYORS SDB-SC-1A, 2A, 1B AND 2B AND TLA-SC-1 AND 2

Conveyors SDB-SC-1A, 2A, 1B and 2B, and conveyors TLA-SC-1 and 2 are each provided with locally mounted ON/OFF push buttons with a locking device for the OFF position and with START/STOP push buttons and a RESET push button on the Motor Control Center MCC-503 in the Electrical Room. The conveyors are capable of being started or stopped at either location. Under normal operation, when the START push button is depressed, the conveyor will operate continuously.

Operation indicating lights are provided on the motor control center and on the Sludge Dewatering Building Control Panel.

Each conveyor is provided with an EMERGENCY STOP pull cord located on each side of the conveyor and running it entire length. Pulling either cord will stop the conveyor.

b. CONVEYOR TLA-STC-1

The sludge transfer conveyor, designated TLA-STC-1, is provided with locally mounted START/STOP push buttons with a locking device for the STOP push button and with START/STOP push buttons and a RESET push button on MCC-503 in the Electrical Room. The conveyor is capable of being started or stopped at either location.

Operational indicating lights are provided on the motor control center and on the Sludge Dewatering Building Control Panel.

The sludge transfer conveyor is provided with an EMERGENCY STOP pull cord located on each side of the conveyor and running its entire length. Pulling either cord will stop the conveyor.

(4) START-UP AND SHUTDOWN PROCEDURES

a. CONVEYORS SDB-SC-1A, 2A, 1B AND 2B, AND TLA-SC-1 AND 1

To start up and shut down the sludge conveyor equipment, use the following procedures:

1. Start-Up
   - Close the circuit breaker on MCC-503
   - Depress the START push button on MCC-503 or at the unit

2. Shutdown
   - Depress the STOP button on MCC-503 or at the unit
   - Hose off any remaining sludge on the equipment

NOTE

If maintenance is to be performed on a sludge conveyor, open the circuit breaker on MCC-503 and depress the locally mounted STOP push button and engage the locking device. Follow approved **Lockout/Tagout** procedures (See Chapter VI, Safety).

All conveyors operate independently. However, conveyors SDB-SC-1A and 2A deposit dewatered sludge on conveyors SDB-SC-1B and 2B while they in turn deposit dewatered sludge on conveyors TLA-SC-1 and 2. To ensure proper operation, each conveyor in line is required to operate if one conveyor is running.

Conveyor operation is mandatory to achieve automatic operation of the associated belt filter press as described under the section headed "Belt Filter Press Equipment".

b. CONVEYOR TLA-STC-1

1. Start-Up
   - Close circuit breaker on MCC-503
   - Depress the START push button on MCC-503 or at the unit
   - Position pneumatic belt plows on conveyors TLA-SC-1 and/or 2 to direct dewatered sludge into chute leading to the sludge transfer conveyor

2. Shutdown
   - Position pneumatic belt plows in conveyors TLA-SC-1 and/or 2 to direct dewatered sludge into a truck loading chute
   - Depress the STOP push button on MCC-503 or at the unit
   - Hose off any remaining sludge on the equipment

NOTE

If maintenance is to be performed on the sludge transfer conveyor, open the circuit breaker on MCC-503, depress the STOP push button at the unit and engage the locking device. Follow approved **Lockout/Tagout** procedures (See Chapter VI, Safety).

(5) MONITORS AND ALARMS

a. CONVEYORS SDB-SC-1A, 2A, 1B AND 2B, TLA-SC-1 AND 2, AND TLA-STC-1

Each conveyor is provided with a red running light and an elapsed time meter on the Motor Control Center MCC-503 and a red running light on the SDBCP. Audible and visual alarms for shutdown or malfunction for each conveyor are provided on SDBCP annunciator.

H. EFFLUENT WATER BOOSTER PUMPING EQUIPMENT SDB-EWB-1, 2 AND 3

(1) DESCRIPTION

The Effluent Water Booster Pumping Equipment is provided in the Sludge Dewatering Building to supply effluent water to each belt filter press spray wash system (see Figure III-SD-SDR-3 Effluent Water Diagram).

The effluent water booster pumping equipment consists of three pumps, designated SDB-EWB-1, SDB-EWB-2 and SDB-EWB-3, associated drive units, and controls.

The pumps are single-stage, horizontal shaft, centrifugal type, axial split case pumps driven by 30 hp constant speed motors. Each effluent water booster pump has a nominal rated capacity of 240 gpm, a rated head of 240 feet, and a pump speed of 3550 rpm.

The pumps are operated and controlled from MCC-503. Each pump is provided with a START/STOP push button, an elapsed time meter, and a red running light on MCC-503. The SDBCP is also equipped with a booster pump red running light.

An ON/OFF push button with a locking device for the OFF position, and a low seal water pressure switch are provided at the pump.

A seal water solenoid valve is provided for each booster pump.

(2) NORMAL OPERATION

Under normal operation, one effluent water booster pump must be in operation for each set of three belt filter presses that are operating. The third pump is provided as a standby unit.

Effluent water solenoid valves provided at each belt filter press will open when the belt filter press has initiated start up as described under the section headed "Belt Filter Press Equipment". Shutdown of a belt filter press or any of its interlocked equipment, when operating automatically, will close the effluent water solenoid valve but will not shutdown the booster pump.

(3) START-UP AND SHUTDOWN PROCEDURES

To start up and shutdown the effluent water booster pumps, use the following procedures:

a. START-UP

- Open the manually operated suction and discharge valves for the selected effluent water booster pump
- Open the manually operated valves at each selected belt filter press
- Close the circuit breaker on MCC-503
- Make sure that the ON push button at the unit is depressed
- Depress the START push button on MCC-503

b. SHUTDOWN

- Depress the STOP push button at MCC-503 or the OFF push button at the effluent water booster pump

NOTE

Stopping the effluent water booster pump before the belt filter press process is stopped will initiate a non-programmed emergency shutdown of each associated operating belt filter press. If maintenance is to be performed on the pump, open the circuit breaker on MCC-503, depress the OFF push button at the unit and engage the locking device.

(4) MONITORS AND ALARMS

Red running lights for each pump are provided on MCC-503 and on the SDBCP. An elapsed time meter is provided on MCC-503. Audible and visual alarms are provided at the SDBCP annunciator for the low seal water pressure switch trip and a pump motor overload trip.

I. PLANT AIR COMPRESSOR EQUIPMENT SDB-PAC-1

(1) DESCRIPTION

The plant air compressor equipment is provided to automatically supply high pressure compressed air for air padding polymer delivery trucks, and to pneumatically operated equipment, systems and hose connections located in the Sludge Dewatering Building (See Figure III-SD-SDR-4, Plant Air Diagram).

The plant air compressor equipment, designated SDB-PAC-1, consists of two air compressors, an air receiver, pressure switches, a pressure relief valve, pressure gauges, a pressure reducing valve, an automatic moisture trap, a manual drain, hose connections, in-line filters, air line lubricators, an air inlet filter-silencer, low oil level switch, and an aftercooler.

The air compressors are two-stage reciprocating, air cooled type driven by constant speed motors through V-belt drives. Each 1-1/2 hp compressor delivers 12.2 cfm of air at 150 psig.

The aftercoolers are air cooled and have an approach temperature not greater than 25 degrees F. difference between air leaving the aftercooler and the ambient air. A mechanical separator and automatic float type condensate drain is provided on each aftercooler condensate discharge.

(2) NORMAL OPERATION

The plant air compressor equipment is provided with a circuit breaker in MCC-503 and a wall-mounted combination motor starter and alternator control panel. The control panel is provided with fusible disconnect switches, motor starters, operating indication lights and an alternating relay which automatically alternates the lead compressor on successive start-ups. The lag compressor will automatically come into service if the lead unit shuts down or fails for any reason.

Adjustable pressure switches are provided for starting the lead compressor (initially set at 116 psig) and the lag compressor (initially set at 105 psig) and stop either or both compressors (initially set at 150 psig).

(3) START-UP AND SHUTDOWN PROCEDURES

To start up and shut down the plant air compressor equipment, use the following procedures:

a. START-UP

- Open the manually operated valves (See Figure III-SD-SDR--4)
- Close the circuit breaker in MCC-503
- Place the disconnect switch located on the local wall-mounted control panel for each compressor in the ON position

NOTE

The lag compressor will automatically come into service if the lead unit shuts down or fails for any reason.

b. SHUTDOWN

- Shut down the plant air compressor equipment by placing the disconnect switches on the local wall mounted control panel for each compressor in the OFF position

NOTE

If maintenance is to be performed on the air compressors, open the circuit breaker on MCC-503 lock the disconnect switches in the local panel in the OFF position Follow approved **Lockout/Tagout** procedures (See Chapter VI, Safety).

(4) MONITORS AND ALARMS

The plant air compressor equipment is provided with pressure gauges, a pressure reducing valve, a low system pressure switch, a low oil switch, motor overload sensor, and operational indicating lights.

The low system pressure switch will actuate an audible and visual alarm on the SDBCP annunciator if pressure drops below 100 psig.

A compressor motor overload will initiate a shutdown and actuate audible and visual alarms on the SDBCP annunciator.

The low compressor oil switch is provided to shut off the compressor and display a low oil level indicating light. Audible and visual alarms are actuated at the local wall-mounted plant air compressor equipment control panel.

J. FLOWMETERS MS-12, 13, 14, 15, 16 AND 17

The flowmeters are provided to measure the digested sludge flow rate to the belt filter press equipment.

Meters MS-12, 13, 14, 15, 16 and 17 are each a 3-inch magnetic flowmeter with a flow range of 0-150 gpm. The meters have a teflon lining and are provided with ultrasonic cleaning for the sensing electrodes.

The flowmeter equipment consists of meters, designated MS-12, 13, 14, 15, 16 and 17, a flow signal convertor with an indicator at each meter and respective indicator/recorders, GS-55, 56, 57, 58, 59 and 60, on the Sludge Dewatering Building Control Panel (SDBCP).

The SDBCP is equipped with a Summator and Indicator/Recorder, designated GS-101, for the total sludge flow to the belt filter presses.

K. FLOWMETERS MP-1, 2, 3, 4, 5 AND 6

The flowmeters are provided to measure the polymer flow rate to the belt filter press equipment

Meters MP-1, 2, 3, 4, 5 and 6 are each a 1/2-inch magnetic flowmeter with a flow range of 0 to 10 gpm. The meters are provided with a teflon lining.

The flowmeter equipment consists of meters, designated MP-1, 2, 3, 4, 5 and 6, a flow signal convertor with an indicator at each meter and respective Indicator/Recorders GS-77, 78, 79, 80, 81 and 82 on the SDBCP.

The SDBCP is equipped with a Summator and Indicator/Recorder, designated GS-102, for the total polymer flow to the belt filter presses.

L. FLOWMETERS MS-18 AND 19

The flowmeters are provided to measure the effluent spray water flow rate to the belt filter press equipment. Meters MS-18 and 19 are each a 3-inch magnetic flow meter with a flow range of 0-300 gpm.

The flowmeter equipment consists of meters, designated MS-18 and 19, a flow indicating transmitter near each meter and respective effluent water flow rate Indicators/Recorders GS-92 and 100 on the SDBCP.

M. HOISTING EQUIPMENT SDB-OC-1 AND 2

(1) DESCRIPTION

The hoisting equipment in the Sludge Dewatering Building consists of two 15-ton capacity, dual electric motor operated, double girder, top running bridge cranes, designated SDB-OC-1 and 2. The hoisting equipment in the Truck Loading Area consists of one hand-operated, revolving mast type hoist operated from the catwalk level.

(2) NORMAL OPERATION

Each overhead top running crane is provided with a pendant control station with push buttons which control operation of the crane, hoist, and trolley motors.

Each pendant control station is provided with FORWARD-REVERSE push buttons to operate the trolley motor and the crane motor and UP-DOWN push buttons to operate the hoist motor.

N. PLANT AIR

The plant air equipment in the Sludge Dewatering Building and Truck Loading Area consists of piping and fittings, shutoff valves, hose valves, in-line filters, pressure regulating valves, pressure gauges, pressure switches, air line lubricators, and moisture traps.

The plant air equipment supplies compressed air to pneumatically operated sludge plows and to hose connections.

Compressed air is supplied to the plant air equipment by the main plant air system described in the section headed "Main Pumping Station" and may be supplemented by the plant air compressor equipment as described in the subsection herein headed "Plant Air Compressor Equipment".

O. PLANT WATER

The plant water equipment in the Sludge Dewatering Building consists of piping and fittings, hose hydrants, a pressure gauge, and shutoff valves.

Plant water is supplied to the Sludge Dewatering Building by the plant water equipment as described in the section headed "Main Pumping Station".

The plant water is supplied to the polymer system, and for hosing down floors and equipment.

P. EFFLUENT WATER

The effluent water in the Sludge Dewatering Building and the Truck Loading Area consists of piping and fittings, shutoff valves, needle valves, flow indicators, booster pumps, low pressure alarms and hose hydrants.

Effluent water is supplied to the Sludge Dewatering Building and Truck Loading area by the general purpose effluent water pumps as described in the section headed "Filter Building and Nitrified Effluent Conduit" and by the effluent water booster pumps located in the Sludge Dewatering Building.

The effluent water is used for pump seal and lubrication water, for belt filter press spray water, and for hosing down belt filter press equipment.

Q. VENTILATING AND AIR CONDITIONING EQUIPMENT SDB-E-1, 2, 3 AND 4, SDB-S-1 AND 2, SDB-F-1 AND 2 AND SDB-AC-1 AND 2

(1) DESCRIPTION

The Ventilation and Air Conditioning Equipment includes four exhaust fans, designated SDB-E-1, 2, 3 and 4, two supply fans, designated SDB-S-1 and 2, two panel air filters, designated SDB-F-1 and 2, and two air conditioner units, designated SDB-AC-1 and 2.

a. EXHAUST FANS: SDB-E-1 AND 2

The exhaust fans, SDB-E-1 and 2, serve the Equipment Room and Mezzanine Area. The two exhaust fans are two-speed, single winding, axial vane belt driven type, with a ventilating capacity of 19,000 cfm at fan speed of 1800 rpm. Each fan is provided with a 7.5 motor horsepower.

b. EXHAUST FAN: SDB-E-3

Exhaust fan, SDB-E-3, serves the Storage Room. The exhaust fan is a direct drive, panel mounted propeller type with a ventilating capacity of 400 cfm at a fan speed of 1550 rpm. The fan is provided with a 1/15 horsepower motor.

c. TOILET EXHAUST FAN: SDB-E-4

The exhaust fan, SDB-E-4, serves the Toilet Room. The fan is of the ceiling recessed type with a ventilating capacity of 85 cfm at a motor speed of 1415 rpm.

d. SUPPLY FANS: SDB-S-1 AND 2

The supply fans, SDB-S-1 and 2, serve the Conveyor and Pipe Gallery Area. SDB-S-1 is a fiber glass propeller type fan with a ventilation capacity of 3819 cfm at a fan speed of 1750 rpm and is provided with a 1/2 horsepower motor. SDB-S-2 is a panel propeller type fan with a ventilation capacity of 3800 cfm at a fan speed of 1725 rpm and is provided with a 1/2 horsepower motor.

e. PANEL AIR FILTERS: SDB-F-1 AND 2

The panel air filters, SDB-F-1 and 2, serve SDB-AC-1 and 2, respectively. These two panel air filters are 2 inches thick and are the replaceable types that can accept an air flow of 1,070 cfm and 1,350 cfm, respectively.

f. AIR CONDITIONING UNIT: SDB-AC-1

The package heat pump unit, SDB-AC-1, consists of a one-piece air-to-air electric heat pump that functions as a year-round air conditioning system to the Control Room of the Sludge Dewatering Building. The heat pump is provided with an indoor thermostat for automatic changeover from cooling to heating in conjunction with continuous indoor blower operation. The minimum total cooling capacity is 33,000 Btu, and the minimum total heating capacity without electric heaters is 34,000 Btuh at air flows of 1170 cfm.

g. AIR CONDITIONING UNIT: SDB-AC-2

The self-contained air conditioner unit, SDB-AC-2, consists of a one-piece air-to-air electric packaged cooling unit that functions as an air conditioning system to the Electrical Room of the Sludge Dewatering Building. The minimum cooling capacity is 36,000 Btuh at an air flow of 1350 cfm.

(2) NORMAL OPERATION

a. EXHAUST FANS: SDB-E-1 AND 2

Exhaust Fans SDB-E-1 and 2 are each provided with FAST-SLOW-STOP push buttons and FAST and SLOW indicating lights located on MCC-503. ON/OFF push buttons with locking devices for the OFF position are located at the unit.

Under normal operation, the fans operate continuously ventilating the Equipment Room and Mezzanine Area.

b. EXHAUST FAN: SDB-E-3

The exhaust fan is equipped with a disconnect switch near the unit and a thermal disconnect switch at the motor.

Under normal operation, the manually controlled wall propeller fan, SDB-E-3, ventilates the Storage Room continuously or intermittently, as required.

c. EXHAUST FAN: SDB-E-4

The exhaust fan, SDB-E-4, is equipped with a disconnect switch near the unit and a thermal disconnect switch at the motor.

Under normal operation, the manually controlled, ceiling recessed type fan ventilates the toilet area continuously or intermittently, as required.

d. SUPPLY FANS, SDB-S-1 AND 2

Supply Fans SDB-S-1 and 2 are each provided with ON/OFF push buttons with a locking device for the ON button at the unit. Each supply fan is provided with START/STOP push buttons and a red running light located on MCC-503.

Under normal operation, when the ON/OFF push button is ON or the START/STOP push button is in the START position, the supply fans will operate continuously or intermittently as required.

e. PANEL AIR FILTERS: SDB-F-1 AND 2

The Panel Air Filters SDB-F-1 and 2 filter clean the intake air on the Air Conditioning Units SDB-AC-1 and 2, respectively. The filters are 2 inches thick and made of pleated replaceable material.

Under normal operation, the panel air filters operate in conjunction with their respective air conditioning units.

f. AIR CONDITIONING SYSTEM: SDB-AC-1 AND 2

Air Conditioner SDB-AC-1 serves the Control Room in the Sludge Dewatering Building. SDB-AC-1 is a heat pump equipped with a two-pole non-fused disconnect switch at the unit and a thermostat control in the Control Room.

Air Conditioner SDB-AC-2 serves the Electrical Room in the Sludge Dewatering Building. SDB-AC-2, a self-contained air conditioning unit is equipped with a three-pole nonfused disconnect switch at the unit and a thermostat control in the Electrical Room.

Under normal operation, the operator in the Sludge Dewatering Building is to adjust both thermostat controls to maintain desired temperature setting.

(3) START-UP AND SHUTDOWN PROCEDURES

To start up and shut down the ventilating and air conditioning equipment, use the following procedures:

a. START-UP

1. Exhaust Fans SDB-E-1 and 2
   - Close the circuit breakers at MCC-503
   - Depress the ON push button at the unit
   - Depress the FAST or SLOW fan speed push button on MCC-503. Operator is to choose the speed depending on ventilating requirements

2. Exhaust Fans SDB-E-3 and 4
   - Close the circuit breaker on LP-503
   - Close the disconnect switch for each fan in the appropriate room of the Sludge Dewatering Building

3. Supply Fans SDB-S-1 and 2
   - Close the circuit breaker on MCC-503
   - Depress the ON push button at the unit
   - Depress the START push button on MCC-503

4. Air Conditioning Heat Pump SDB-AC-1
   - Close the circuit breaker on LP-503
   - Close the two-pole nonfused disconnect switch at the unit and the temperature switch at the thermostat in the Control Room
   - Adjust thermostat in the Control Room to a desired temperature setting

5. Self-Contained Air Conditioner SDB-AC-2
   - Close the circuit breaker on LB-503
   - Close the three-pole nonfused disconnect switch at the unit and the temperature switch at the thermostat in the Electrical Room
   - Adjust thermostat in the Electrical Room to desired temperature setting

b. SHUTDOWN

1. Exhaust Fans SDB-E-1 and 2
   - Depress the STOP push button on MCC-503 or depress the OFF push button at the unit

NOTE

If maintenance is to be performed on the fan, open the associated circuit breaker on MCC-503, place the ON/OFF switch at the unit in the OFF position and engage the locking device. Follow approved **Lockout/Tagout** procedures (See Chapter VI, Safety).

2. Exhaust Fans SDB-E-3 and 4
   - Open the disconnect switch located near the fan in the appropriate room of the Sludge Dewatering Building

3. Supply Fan SDB-S-1 and 2
   - Depress the STOP push button on MCC-503 or depress the OFF push button at the unit

NOTE

If maintenance is to be performed on the fan, open the associated circuit breaker on MCC-503, place the ON/OFF switch at the unit in the OFF position and engage the locking device. Follow

approved **Lockout/Tagout** procedures (See Chapter VI, Safety).

4. Air Conditioning Heat Pump SDB-AC-1
   - Open the two-pole nonfused disconnect switch at the unit or open the temperature switch at the thermostat in the Control Room

NOTE

If maintenance is to be performed on the air conditioning unit, open the disconnect switches at the unit. Follow approved **Lockout/Tagout** procedures (See Chapter VI, Safety).

5. Self-Contained Air Conditioner SDB-AC-2
   - Open the three-pole nonfused disconnect switch at the unit or open the temperature switch at the thermostat in the Electrical Room

NOTE

If maintenance is to be performed on the air conditioning unit, open the disconnect switches at the unit. Follow approved **Lockout/Tagout** procedures (See Chapter VI, Safety).

(4) MONITORS AND ALARMS

The Exhaust Fans SDB-E-1 and 2 are provided with FAST and SLOW status indicating lights located on the Motor Control Center MCC-503. Alarm and shutdown are provided for exhaust fan motor overload.

The Exhaust Fans SDB-E-3 and 4 are provided with thermal overload element disconnect switches located at their appropriate motors.

The Supply Fans SDB-S-1 and 2 are provided with a red running indicator light located on MCC-503. Alarm and shutdown are provided for supply fan motor overload.

The Panel Air Filters SDB-F-1 and 2 are provided with unit mounted filter pressure gauges installed to measure the pressure drop across each bank of air filters.

The Air Conditioning Heat Pump SDB-AC-1 is provided with a low voltage control panel and a cooling/two-stage heating thermostat. The compressor is protected by a high pressure limit switch and off-cycle heat. The blower motors are provided with internal thermostatic overhead protection.

The Self-contained Air Conditioner SDB-AC-2 is provided with a low voltage control panel and cooling thermostat. The compressor is protected by a pressure limit switch and off-cycle heat. The blower motors are provided with internal thermostatic overheat protection.

R. POWER DISTRIBUTION SYSTEM

The Power Distribution System is shown in detail on the contract plans and various shop drawings. Refer to Table III-SD-SDR Sludge Dewatering Building and Truck Loading Area - Facility Equipment Summary for contract plan and shop drawing numbers which pertain to the power distribution system.

III-SD-HDF SLUDGE HEAT DRYING FACILITY

A. GENERAL

The Sludge Heat Drying Facility contains the following four major systems:

- Wet Sludge Conveying Process
- Sludge Pelletizing Process
- Dry Product Conveying Process
- Air Polluting Control Process
- Wet Scrubber Odor Control System
- Compressed Air System

The control systems for monitoring and operation of each of these process areas is discussed in each respective subsection.

Various process and equipment sensors have been provided to monitor process and equipment status, process functions, temperature at selected locations, equipment protective devices and the most common equipment mechanical failures. Process and equipment monitors are described in this chapter in the text for the process or equipment with which they are associated. The process and equipment monitors, which are described in this chapter, monitor specific functions and common operating problems which are peculiar to the Sludge Heat Drying Facility.

Operating parameters that are common to a type of process or to equipment systems which may be found at the Howard F. Curren AWT Plant are also presented in the following U.S. Environmental protection Agency Technology Transfer Manuals:

- Sludge Treatment and Disposal
- Methods of Chemical Analysis of Water and Wastes
- Analytical Quality Control

B. WET SLUDGE CONVEYING PROCESS (WSCP)

(1) DESCRIPTION

The purpose of the Wet Sludge Conveying Process (WSCP) is to convey wet sludge from the belt filter presses and a truck unloading station to the wet sludge storage bins. Included in the WSCP are the following major process functions:

- Belt Filter Press to Wet Sludge Bin Conveyors
- Truck Unloading Station to Wet Sludge Bin Conveyors
- Truck Unloading Station Duplex Sump Pumps

(2) BELT FILTER PRESS TO WET SLUDGE BIN CONVEYORS

a. DESCRIPTION

Two conveyor trains feed wet sludge from the belt filter presses to the wet sludge storage bins.

b. NORMAL OPERATION

Normal operation of the wet sludge conveyors will be the automatic mode of operation. The sequential logic for automatic control of the WSCP is contained within the Sludge Drying System Logic Cabinet (SDSLC). When a process automatic start push button is activated, the logic will provide a start sequence that prevents material buildup on the conveyors or overflow of material from the conveyor.

c. START-UP AND SHUTDOWN PROCEDURES

On the Sludge Drying System Control Panel (SDSP), located in the sludge heat drying building, there are two START/STOP push buttons that energize each train when the WSCP mode select switch is in the automatic position. The automatic mode permits sequential logic to control the WSCP. When the mode select switch is in the manual position, a dedicated start push button will start the conveyor. All personnel and equipment safety interlocks are active in both the automatic and manual modes of operation.

d. ALTERNATE OPERATION

JOG/RUN/REMOTE switches are provided with the local (field) controls so that the operator can select manual control or sequential control from the logic programmed in the sludge drying system programmable controller(s). When the JOG/RUN/REMOTE switch is in the JOG position, all interlocks are bypassed and the motor for the switch will run as long as the START push button is physically pushed. When the local JOG/RUN/REMOTE switch is in the RUN position, the operator will be able to start a motor from its local control position with the personnel and equipment interlocks active. The REMOTE position of the JOB/RUN/REMOTE switch will provide a permissive signal to the Sludge Drying System Local Cabinet and also accept a remote start signal from either the SDSP or the SDSLC.

e. MONITORS AND ALARMS

All status, alarm and analog signals are transmitted to the plant's main control room via a Remote Terminal Unit (RTU).

Signals are provided to the SDSP graphic panel as a common equipment alarm for each conveyor and for overspill conditions. Direction of the belt filter press discharge conveyor travel are part of the control logic.

Controlled shutdown is the reverse of start-up. When shutdown of a conveyor occurs due to a failure, all upstream conveyors will shut down. If the conveyor that immediately follows the conveyor coming from the belt filter presses fails, the logic will divert the flow of sludge to another elevating conveyor train. If repeated overspill conditions occur on a conveyor, an alarm signal will occur and the logic will divert the transport of wet sludge from that train to a train with no overspill condition (if it is operationally able to accept the diverted sludge).

Some conditions will necessitate simultaneous shutdown of all conveyor trains:

- Personnel safety shutdown conditions.

- Continuing overspill conditions occurring on all trains.

- Failure of all trains that interface to the belt filter presses.

- High storage bin levels for all loading zones of all wet sludge storage bins.

NOTE

The bin level should be monitored so that corrective action is taken when the high level signal is given. The high-high level signal will automatically shut down the belt presses and sludge feed conveyors.

- Operating mode change of the WSCP equipment.

- A weighing system that is incorporated into each elevating conveyor on each train will weigh the wet sludge, then record and totalize it on instruments located on the SDSP.

f. PROCESS CONTROL

The solids content of the sludge cake is the process control parameter for the belt filter press to set sludge storage bin conveyors. The solids content should be between 14 to 22 percent dry solids. Any less of a solids content is inefficient and causes a waste of heat energy required to dry out the excess water from the sludge. In addition, wet sludge cake is more prone to sticking to the conveyor and storage bins. Routine solids analyses should be performed on the press cake to monitor the percent solids content of the sludge being conveyed to the wet sludge storage bins and ultimately to the sludge heat drying process. Microwave moisture analysis of the sludge is a quick operational control test that should be used. Corresponding adjustments should be made to the upstream belt filter press process to optimize the removal of water from the sludge prior to conveyance to the wet sludge storage bins.

NOTE

For each percent increase in feed solids, roughly 2 tons per day of extra dry product will be produced (see Figures III-SD-HDF-1, III-SD-HDF-2, and III-SD-HDF-3 for illustrations of feed solids at 14, 18 and 22 percent solids). The key is to remove the water early in the system at the belt filter presses.

(3) BELT SCALE CALIBRATION

The scale should be calibrated once per day while the conveyor is running with no material on it at the time using the following procedure.

- Press - fine calibration.

- Security Code: Press "O" then Enter.
- Fine Zero: Press "1" then Enter.
- Push S/S, Press Start Stop (zero calibration will take 2 minutes).
- Zero Dev'N: X.XX %: Press "1" Enter (should be less than 2 percent - if not contact supervisor).
- Zero Dev'N XX.XX % Complete: Press Enter
- Press: Mode Select
- Press: 2 Enter
- Press Rate & Total
- Calibration is complete. Log the total in your records.

(4) TRUCK UNLOADING STATION TO WET SLUDGE BIN CONVEYORS

a. DESCRIPTION

The conveying system for the truck unloading station consists of a screw conveyor in the sludge pipe and an elevating conveyor to the wet sludge storage bins.

b. NORMAL OPERATION

The truck unloading station allows sludge cake from outside sources to be introduced into the sludge heat drying system. The conveying system for the truck unloading station is manually operated from a control panel located at the truck unloading station area. The sludge from the truck unloading station is transported by elevated conveyors to wet sludge storage bins.

c. START-UP AND SHUTDOWN PROCEDURES

Start-up and shutdown of the truck unloading station conveyors is controlled by the local control panel selector switches.

1. Start-up
   - Place the REMOTE/LOCAL/JOB selector in the "LOCAL" position.
   - Press "START" push button

2. Shutdown
   - Press "STOP" push button

d. ALTERNATE OPERATION

The truck unloading station can serve as a backup to the belt filter press wet sludge conveyors. The press sludge can be hauled to the station by truck to be introduced into the sludge heat drying system.

e. MONITORS AND ALARMS

The following alarm or status signals are sent from the truck unloading station to the SDSP:

- A common alarm signal to indicate conveyor trouble (this signal is annunciated at the graphic panel).
- Truck loading station in operation.
- Personnel/Safety alarm shutdown.

f. PROCESS CONTROL

The process control parameter for the truck unloading station to wet sludge bin conveyors is the solids content of the sludge being conveyed to the wet sludge storage bins. The solids content of the sludge from the truck unloading station should be similar in solids content to that being conveyed from the belt filter presses (between 14 to 22 percent dry solids) to avoid "slug" loads to the process.

NOTE

If the solids content differs, the volume and relative solids content should be monitored carefully since this has an impact on the sludge mixture that will be produced in the pug mill mixing unit.

Care must be taken so that if too dry of a sludge mix (greater than 22 percent dry solids) is introduced to the mixing unit to be blended with incoming recycle fines, that the recycle fines feed rate be reduced accordingly. If a load of unusually dry sludge is being conveyed from the truck unloading station, it should be gradually introduced to the wet sludge storage bins with large quantities of "wet" belt filter press sludge. An unusually "wet" load of sludge from the truck unloading station should be handled in the same manner by gradually introducing it to the wet sludge storage bins with the belt pressed sludge. Because the quality of the sludge being introduced to the sludge heat drying process has a great impact on process efficiency, it is important to monitor any "outside" sludge that is brought in by other facilities. The key is to avoid "slug" loading the pug mill mixing unit with a sludge of a greatly varying quality from that normally produced by the belt filter presses.

(5) TRUCK UNLOADING STATION DUPLEX SUMP PUMPS

a. GENERAL

Two sump pumps are provided in the truck unloading station motor pit to convey water that collects in the pit.

b. NORMAL OPERATION

Normal operation is for the pumps to be automatically controlled by the float activated switches with alternating operation of the two pumps.

c. START-UP AND SHUTDOWN PROCEDURES

Each sump pump has a local HAND/OFF/AUTO selector switch. In the normal automatic mode of operation, each pump's selector switch should be in the AUTO position. The OFF position will not allow the pumps to run.

d. ALTERNATE OPERATION

The sump pumps can be run manually by placing the HAND/OFF/AUTO selector switch in the HAND position. This mode of operation can be employed if the automatic float control activated switch is not operating.

e. MONITORS AND ALARMS

Level control PUMP OFF, PUMP ON and HI-LEVEL ALARM float type switches are provided and consist of switches and lights on the front of the local control panel. A high water alarm light, a high-level alarm contact for external connection, two status indicator lights, alternator circuit, and a modified circuit to energize an alarm and a second pump at the high water level are also included. The control panel is pole-mounted at the wet sludge station located above the sump pumps.

f. PROCESS AND CONTROL

Process control consists of routinely checking that water is being removed from the pit and that the pit and that the pumps alternate operation.

C. SLUDGE PELLETIZING PROCESS (SPP)

(1) GENERAL

The sludge pelletizing process contains the following equipment and systems for each train (see Figure III-SD-HDF-4).

- Wet sludge storage bin and conveyors to pug mill
- Recycle bin and conveyor to pug mill
- Pug mill mixing unit
- Rotary drum dryer with direct fixed furnace
- Solids settling chamber
- Screw conveyors
- Vibrating screens
- Dried material crusher
- Dual cyclone separator
- Venturi particulate scrubber with cyclone separator
- Induced draft fan

The purpose of the sludge pelletizing process is to convert wet sludge to a dry pelletized product.

The sludge pelletizing process (SPP) starts with conveying the sludge from the wet sludge storage bins and fines from the recycle bin for mixing in the pug mill mixing unit. In the pug mill, the dry fines from the recycle bins gets coated with the wet sludge. The sludge then enters the rotary drum dryer. In the rotary drum dryer the mixture is subjected to temperatures up to 1400°F. The mixture is conveyed through the three-pass rotary dryer by its mechanical flights on each pass and the negative pressure hot air stream.

Following the rotary dryer is a settling chamber which separates the dried product from the hot air stream. The dried product is transported to the vibrating screens for sizing. Dried product of the proper size is

conveyed to the storage silos; oversized dry product is crushed, combined with undersized material, then transported to the recycle bin as fine particulates or "fines". Trash is separated and sent to a bin for disposal.

Cyclonic separation is used to separate fine particulate matter from the process hot air stream; these particulates are then transported to the recycle bin or aspirated into a slurry and sent down a drain. The hot air stream undergoes additional treatment by scrubbing in a venturi scrubber, a cyclonic separator and an afterburner air pollution control system.

(2) PROCESS CONTROL

The main process control parameters for the sludge pelletizing process are the percent solids content of the feed sludge to the system. The quality of the final product is dependent on the ratio of the recycle fines to the wet sludge that is fed to the rotary drum dryer from the pug mill mixing unit. In order for the process to operate in an energy efficient manner, it is critical that the wet sludge feed be between 14 to 22 percent solids. The higher the percent solids the more energy efficient the process will run as less energy (in the form of heat) is used to drive-off excess water (see Figures III-SD-HDF-I, III-SD-HDF-2 and III-SD-HDF-3). The quality of the mixed feed sludge to the dryer should be monitored for excessive dryness. The ideal mix will consist of a well-blended dry nucleus or recycle fines coated with wet feed sludge.

NOTE

However, care must be taken to ensure that too dry a sludge is not fed to the dryer from the pug mill mixing unit because the potential for fire exists with too dry of a sludge mix.

The ratio of dry recycle sludge to wet sludge requires periodic adjustment to optimize the feed product to the rotary dryer from the pug mill mixing unit. The best mixing ratios will be determined through actual operational practices, with the initial process operating ratios used as guidelines from which to start. (See Figures III-SD-HDF-5 and III-SD-HDF-6).

NOTE

Individual equipment process control will be addressed in each respective subsection.

(3) WET SLUDGE STORAGE BINS AND CONVEYORS TO PUG MILL

a. DESCRIPTION

Dewatered wet sludge cake from the belt filter presses is conveyed by the wet sludge conveying system to one of two wet sludge storage bins. The wet sludge storage bins provide adequate storage and surge capacity between the wastewater treatment plant's dewatering facilities and the operational requirements of each sludge pelletizing train. The usable storage capacity of the wet sludge storage bin is 42 cubic yards or 1100 cubic feet. Each bin has two ultrasonic level indicating transmitters that monitor the sludge cake level on each side of the bin. Diverter plows are

automatically controlled to evenly distribute the incoming cake as well as to allow bypass to the other bin.

b. NORMAL OPERATION

Normal operation of the wet sludge storage bins and conveyors is the automatic mode of operation with the system speed and operation being controlled by the master feed rate set point and the programmable logic controllers.

c. START-UP AND SHUTDOWN PROCEDURES

A REMOTE/LOCAL/JOG switch is provided with the local (field) controls so that the operator can select manual control or sequential control from the logic programmed in the sludge drying system programmable controller(s). When the REMOTE/LOCAL/JOG switch is in the JOG position, all interlocks are bypassed and the motor for that switch will run as long as the start push button is pushed in. When the local REMOTE/LOCAL/JOG switch is in the LOCAL position, the operator can start a motor from its local control position with the personnel and equipment interlocks active. The REMOTE position of the REMOTE/LOCAL/JOG switch will provide a permissive signal to the SDSLC and also accept a remote start signal from the SDSP or SDSLC.

d. ALTERNATE OPERATION

There will be instances when only one train is operated for extended periods, in which case it is not desirable to feed wet sludge into the bin of a nonoperative train. Therefore, switches on the SDSP (and appropriate logic in the programmable controllers) are provided to divert all wet sludge to one storage bin or the other.

e. MONITORS AND ALARMS

When conditions in the wet sludge storage bin being fed reach the High-High level, the sludge feed conveyors and belt filter presses will shut down. In addition to the operating logic, signals are sent that indicate an alarm at the SDSP, SDSLC, and RTU when an empty bin level condition exists at both drop locations on a wet sludge storage bin. The operating logic also provides emergency shutdown for an SPP train and the WCSP if high sludge levels simultaneously exist at all drop zones in that train's wet storage bins.

f. PROCESS CONTROL

Control of the bin level for the wet sludge storage bins is part of the SDSP logic. This logic controls the bin levels by manipulating the diverter plows on the conveyors downstream of the belt filter presses and the diverter plows on the conveyors that feed wet sludge storage bins. The plows are adjustable to provide for future Train No. 1.

(4) RECYCLE BIN

a. DESCRIPTION

Previously dried solids are stored in the dried solids recycle bin to await conveyance by screw conveyor to the pug mill mixing unit. The minimum storage capacity of the dried solids recycle

bin is 95 cubic yards or 2500 cubic feet. Approximately 60 percent of the incoming sludge is returned as recycle fines.

b. NORMAL OPERATION

Normal operation of the recycle bin is the automatic mode of operation (remote) with the unit speed being controlled by the master feed rate set point.

c. START-UP AND SHUTDOWN PROCEDURES

A REMOTE/LOCAL/JOG switch is provided with the local (field) controls so that the operator can select manual control or sequential control from the logic programmed in the sludge drying system programmable controller(s). When the REMOTE/LOCAL/JOG switch is in the JOG position, all interlocks are bypassed and the motor for that switch will run as long as the start push button is pushed in. When the local REMOTE/LOCAL/JOG switch is in the LOCAL position, the operator can start a motor from its local control position with the personnel and equipment interlocks active. The REMOTE position of the REMOTE/LOCAL/JOG switch will provide a permissive signal to the SDSLC and also accept a remote start signal from the SDSP or the SDSLC.

d. MONITORS AND ALARMS

Empty bin level and High-High bin level for the recycle fines bin are individual indication/alarm conditions monitored locally and at the SDSP, SDSLC, and RTU. Empty and High-High level in the recycle bin is an emergency shutdown condition.

e. PROCESS CONTROL

Process control for the recycle bin consists of running routing moisture analyses on samples of the dried solids (fines). The results of the analyses will aid in determining the optimum mixing ratio of recycle fines to incoming wet sludge in the pug mill mixing unit.

(5) PUG MILL MIXING UNIT

a. DESCRIPTION

The pug mill mixing unit is a double shaft, paddle flow mixer in horizontal U-troughs with hinged cover(s). The paddles are operated by a variable-speed drive. The input products, wet sludge cake, and previously dried material is thoroughly blended to produce an irregularly shaped, homogeneous 55 to 70 percent solids particle feed to the rotary drum dryer.

b. NORMAL OPERATION

Normal operation of the pug mill mixing unit is the automatic mode of operation (remote) with the unit speed being controlled by the master feed rate set point.

c. START-UP AND SHUTDOWN PROCEDURES

A REMOTE/LOCAL/JOG switch is provided with the local (field) controls so that the operator can select manual control or sequential control from the logic programmed in the sludge drying system programmable controller(s). When the REMOTE/LOCAL/JOG switch is in the JOG position, all

interlocks are bypassed and the motor for that switch will run as long as the start push button is pushed in. The operator can start a motor from its local control position with the personnel and equipment interlocks active. The REMOTE position of the REMOTE/LOCAL/JOG switch will provide a permissive signal to the SDSLC and also accept a remote start signal from the SDSP or the SDSLC.

d. ALTERNATE OPERATION

The pug mill mixing unit can be run in a manual mode of operation for clean-out purposes. When the REMOTE/LOCAL/JOG switch is in the LOCAL position, the operator can START and STOP the unit with the local START/STOP push buttons.

e. MONITORS AND ALARMS

Motor failure, shaft failure conditions are monitored for the sludge mixing operation conveyors and the pug mill mixing unit. Signals are provided to the SDSP, SDSLC and RTU to indicate trouble for each conveyor. Conveyor failure of any one of these conveyors will shut down all conveyors. Personnel safety trips shall shut down and alarm both locally and at the SDSP.

f. PROCESS CONTROL

Control of the pug mill mixing units "A" and "B" is automatic. When dryer outlet temperatures get up to operating parameters, the mixers will start automatically. At the same time, the wet sludge feed conveyor and the recycle fines feed conveyor will also start up. The wet sludge feed conveyor is a constant-speed conveyor. To control the wet sludge feed to the pug mill, there is a variable speed conveyor in the bottom of each wet bin which feeds the constant-speed conveyor going to the pug mill. The recycle fines conveyor to the pug mill is a variable-speed conveyor. Once a proper ratio of wet to dry sludge is established (55-70 percent dry solids), the master feed rate controller will increase or decrease the speeds of both wet bin feed conveyor and the recycle fines conveyor proportionally in order to maintain the solids percent (consistency) going into the dryer.

(6) PUG MILL CLEANING PROCEDURE

The pug mills should be cleaned when the pug mill amps increase above 11 amps for pug mill "A" and above 15 amps for pug mill "B". The following procedure is used to clean the pug mills in this case:

- Change the Moore controller tune settings back to normal.

NOTE

Inform the press operators before beginning any cleaning procedures.

- Adjust the master feed down to around 10 - 15 and allow it to run for about 10 minutes. This will take the load off the pug mill so that it should start up easier in local.

- Disable all feeds coming into the pug mill.

- Put pug mill "B" in local and start it up, then start up pug mill "A." Allow them to run a few minutes to purge excess solids, then stop them and clean the blades. Make sure the back blades on pug mill "B" get cleaned also; they can be cleaned from the pug mill "A" cover. If the back blades are not clean and the pug mill is started again, those blades will not move solids forward and will cause a solids build up. This will cause the pug mill to have high amps and eventually will cause shut down of the full pug mill.

- After the pug mills are cleaned, make sure to switch REMOTE/LOCAL/REMOTE the switches so that the feeds can be enabled. Allow the pug mills to run for a few minutes at 10 - 15 on the master feed to give them time to get up to speed. Once they are up to speed, the feeds can be adjusted back up to 25 or wherever the pug mill normally operates. After about 30 minutes, put the Moore controller settings back to the running parameters.

- Notify the press operator that the pug mills are ready to start receiving sludge cake.

NOTE

If a radical adjustment on the master feed (up or down 10 points) must be made for any reason, the tune parameters should be set back to normal. Normal Parameters (Tune 1) -, 2.75, .25, 4.0, 4.0

(7) ROTARY DRUM DRYER

a. DESCRIPTION

The rotary drum dryer has a direct, end-fired furnace with a natural gas burner. The furnace supplies hot gases (products of combustion plus dilution air) at temperatures up to 1400°F to the rotary dryer. The hot gases dry the mixed feed to a dry solids content of approximately 95 percent solids. The walls of the three-pass rotary drum dryer have flights which act to shape and convey the sludge cake through each pass (see Figure III-SD-HDF-7). The hot gas stream from the furnace under negative pressure from the induced draft (ID) fan also acts as a conveying medium for moving the mixed feed through the dryer. The interaction of the hot gases, the mixed material and the rotary action of the dryer have a pelletizing effect (rounding of product) on the mixed feed as it passes through the rotary dryer. The rotary drum dryer has a "quench" water mist fogging system located at the dryer inlet. A high inlet or outlet temperature will set off the system. The high temperature setpoints are in controllers located in the dryer panel. Water spray nozzles are capable of providing a spray pattern at 100 gpm at 40 psig in the event of high temperature or a fire within the dryer.

b. NORMAL OPERATION

The rotary drum dryer furnace controls for each train provide semi-automatic start-up of the unit. The controls have automatic safety shutdown. Control of the system is microprocessor-based and

is interfaced with the SDSLC. The controls have local setpoint control and the capability of receiving a remote setpoint. The process variable inputs to the controls are monitored by the RTU, SDSP, and SDSLC.

c. START-UP PROCEDURES

- Make sure all lights (red) on top row of control panel are on.
- Open quench system water valve, dryer will now go into a 20-30 second purge.
- When purge light clears, the ignition button light will appear. Push ignition button and your pilot light will come on.
- Open both maxon valves and then main gas valve. Go to the dryer burner panel and make sure that the main burner light is on and that the pilot light is off.

Dryer burner is now on line and will automatically ramp up the gas valve until the pre-set dryer outlet temperature (180 degrees) is reached, at which time the pugmills and wet and dry feeds will come on line. The dryer will now automatically hold the preset outlet temperature. The inlet temperature will go up or down to hold this setpoint.

d. MONITORS AND ALARMS

All controls are indicated from a control enclosure located in the furnace dryer area. All controls required for manual or semi-automatic control of the furnace have LOCAL/REMOTE and HAND/OFF/AUTO selector switches. All process variable inputs are recorded on circular charts mounted on the SDSP.

NOTE

A common warning alarm indicating furnace trouble is sent to the SDSP, SDSLC and RTU. (This alarm monitors all problems that would present a threat to safety of plant personnel, equipment, and a potential furnace shutdown.) Furnace status is also monitored at the SDSP, SDSLC, and RTU.

Additional alarms for high dryer exit temperature and dry motion failure are sent to the SDSP, SDSLC, and RTU.

e. PROCESS CONTROL

Ultraviolet flame detectors are used to ensure that the pilot and main flame are ready for start-up and/or shutdown of the furnace. The viewing window is air-purged to ensure that a clean and clear view is maintained for the ultraviolet detectors.

Temperature elements (probes) are used to provide furnace temperatures for start-up and shutdown as well as for burner control. The hottest area in the furnace is monitored for temperature and is used for alarm and automatic shutdown.

A pressure element is installed on the furnace discharge to provide positive draft control through the combustion chamber. The pressure element is also used for start-up and shutdown and for the burner controls to assure that the burner pressure is higher than the air of combustion pressure. Burner pressure is controlled by the air pressure feed to the mixing head of the burner.

The inlet temperature to the dryer is the main control parameter for the furnace and should be monitored carefully. If a consistent amount of sludge is being fed from the pug mill to the dryer, but the dryer inlet temperature drops off one or two hundred degrees, this could indicate a fire in the dryer. However, a dryer than normal feed sludge or a drop in the amount of sludge being fed can also cause a lowering of the inlet temperature.

A fire in the dryer is typically caused by too dry a mix of feed sludge from the pug mill mixing unit. An excessively dry sludge mix causes dust to form around the pug mill, and creates a strong potential for a fire. The operator should perform periodic microwave moisture analyses of the sludge and routinely visually monitor the mix being supplied to the rotary dryer for excessive dryness.

The process control for the rotary drum dryer is its exit temperature. The exit temperature of the dryer is an indication of when the wet sludge material is sufficiently dried. The dryer outlet temperature is controlled by regulating the amount of fuel gas to the furnace burner, which is controlled automatically by sensors at the rotary dryer outlet. These sensors send messages back to the furnace to regulate the furnace temperature. The furnace air-to-fuel ratio is regulated by the ultraviolet flame monitor.

(8) SOLIDS SETTLING CHAMBER

a. DESCRIPTION

The dried material exits the rotary drum dryer and enter the solids settling chamber where most of the dried material is separated from the gas stream. The solids settling chamber is a vertical vessel with a conical bottom to facilitate collection of the dried solids. Since the entire pelletizing process is operated under a negative pressure, a rotary valve is provided at the bottom of the conveyor to act as an air lock.

b. NORMAL OPERATION

Normal operation of the solids settling chamber is for the unit to be in a continuous automatic mode of operation.

c. START-UP AND SHUTDOWN PROCEDURES

A REMOTE/LOCAL/JOG switch is provided with the local (field) controls so that the operator can select manual control or sequential control from the logic programmed in the sludge drying system programmable controller(s). When the REMOTE/LOCAL/JOG switch is in the JOG position, all interlocks are bypassed and the motor for that switch will run as long as the start push button is pushed in. When the local REMOTE/LOCAL/JOG switch is in the LOCAL position, the operator

can start a motor from its local control position with the personnel and equipment interlocks active. The REMOTE position of the REMOTE/LOCAL/JOG switch will provide a permissive signal to the SDSLC and also accept a remote start signal from the SDSP or the SDSLC.

d. PROCESS CONTROL

The process control for the solids settling chamber is the continuous discharge of the separated material. The chamber must continuously discharge separated material for proper performance.

Routine samples from the solids settling chamber of the pelletized product should be analyzed for percent solids and product consistency.

(9) SCREW CONVEYORS

a. DESCRIPTION

For each sludge pelletizing process train there are conveyors that transport sludge from the wet sludge storage bin and a series of conveyors that transport fine particulates from the recycle bin to the dryer. All of these conveyors have variable speed drives.

b. NORMAL OPERATION

Normal operation of the screw conveyors is the automatic mode of operation with the variable speed set point of the first conveyor providing a signal to which the other conveyors are ratio controlled.

c. START-UP AND SHUTDOWN PROCEDURES

A REMOTE/LOCAL/JOG switch is provided with the local (field) controls so that the operator can select manual control or sequential control from the logic programmed in the sludge drying system programmable controller(s). When the REMOTE/LOCAL/JOG switch is in the JOG position, all interlocks are bypassed and the motor for that switch will run as long as the start push button is pushed in. The REMOTE position of the REMOTE/LOCAL/JOG switch will provide a permissive signal to the SDSLC and also accept a remote start signal from the SDSP or the SDSLC. When the REMOTE/LOCAL/JOG switch is in the LOCAL position, the operator can start a motor from its local control position with the personnel and equipment interlocks active.

d. MONITORS AND ALARMS

Motor failure, shaft failure, and no flow conditions are monitored for each conveyor. Signals are provided to the SDSP, SDSLC and RTU to indicate trouble for each conveyor. Conveyor failure of any one of these conveyors will shut down all conveyors. Personnel safety trips shall shut down and alarm both locally and at the SDSP.

e. PROCESS CONTROL

Process control of the screw conveyors consists of ensuring that the conveyors do not become overloaded. An overloading of material to the conveyor could cause spill hatches to open and shut

down the conveyor. The conveyor speed set point should be adjusted as necessary to obtain an even, continuous flow of material.

(10) VIBRATING SCREENS

a. DESCRIPTION

The dried material from the solids settling chamber is conveyed to a vibratory screening device. The screening device contains three (3) vibrating screens which separate out trash, oversized material, product, and fines. The trash and debris is directed to a dumpster. The oversized material is sent to a solids crusher or grinder. The fines or undersized material is conveyed to the dried solids recycle bin and eventually is returned to be mixed in the pug mill with incoming wet sludge cake and to the rotary drum dryer. The final product is a granular or pellet-like material, uniformly graded and having a pellet size of 2 mm or greater.

b. NORMAL OPERATION

Normal operation of the vibrating screens is the automatic mode of operation.

c. START-UP AND SHUTDOWN PROCEDURES

1. Start-up

- Place the local disconnect to the ON position.
- Place the REMOTE/LOCAL selector switch in either the remote position for automatic control, or local position for local manual control.
- Press "START" push button.

2. Shutdown

- Press push button.

d. ALTERNATE OPERATION

At the product outlet chute of the vibratory screen, there is a gravity-fed diverter valve which is able to direct the flow of dry product to the transfer conveyors feeding the storage silos or the solids crusher. The reason for a diversion to the crusher would be that, in the event of certain emergency situations, product could be converted into fines thus avoiding a shutdown of the rotary drum drying train. The situations that may cause a product diversion to the crusher are either that the recycle bin is low or the dry product conveying and storage processes have an emergency.

e. MONITORS AND ALARMS

The vibrating screens for each train are monitored locally for malfunction. Failure of the vibrating screens will shut down all SPP conveyors.

f. PROCESS CONTROL

The process control of the vibrating screens is the speed and spiral pattern of the incoming material over the screens. The speed and pattern of the material over the screen cloth can be set by the operator for maximum throughput and screening efficiency. This is accomplished by adjusting the angle lead graduated adjustment.

(11) DRIED MATERIAL CRUSHER

a. DESCRIPTION

The dried material crusher consists of two revolving satellite-coated drums which crush the incoming oversized material from the vibrator screens into fines. The fines are then conveyed by the dried material train conveyor to the vibrating screens for resizing. The fines then will go to the recycle bin and eventually be returned to the pug mill to be mixed with incoming wet sludge cake.

b. NORMAL OPERATION

Normal operation of the dried material crusher is the automatic mode of operation.

c. START-UP AND SHUTDOWN PROCEDURES

1. Start-up

- Place the local disconnect in the ON position.
- Place the REMOTE/LOCAL/JOG switch in either the REMOTE position for automatic control, or LOCAL position for manual control.
- Push START push button.

2. Shutdown

- Push STOP push button.

d. MONITORS AND ALARMS

The dried material crusher is monitored locally for malfunction. Failure of the crusher will shut down all SPP conveyors.

e. PROCESS CONTROL

The process control for the dried material crusher is provided to routinely check the consistency of the fines being produced by the crushing action of the satellite-coated drums. If the material is not being adequately reduced in size, corrective maintenance or an adjustment of the unit may be warranted.

(12) DUAL CYCLONE SEPARATOR

a. DESCRIPTION

The dual cyclone separator is a dust separating device using centrifugal action for separating particles from air or gas streams. The cyclone has no moving parts and discharges the separated materials on a continuous basis.

b. NORMAL OPERATION

The normal operation of the dual cyclone separator is to be online continuously while the SPP is in operation. The dust-bearing gas enters the cyclone and is forced into a cyclonic spiraling gas rotation which forces the dust to the cyclone wall. The dust is discharged to a dust hopper and is removed routinely and returned to the recycle bin. The cleaned gas passes from the separator through a gas outlet located on top of the unit.

c. START-UP AND SHUTDOWN PROCEDURES

1. Start-up

- Place the local disconnect in the ON position.
- Place each air lock REMOTE/LOCAL/JOG switch in either the REMOTE position for the automatic control or the LOCAL position for local manual control.
- Press START push button.

2. Shutdown

- Press STOP button.

d. MONITORS AND ALARMS

The rotary valves on the dual cyclone separators for each train are monitored locally for malfunction such as excessive pressure drop or low water flow. The SDSP logic will interpret a venturi scrubber/cyclonic separator malfunction as an emergency shutdown condition. Signals are sent to the SDSP, SDSLC and RTU for indication/alarm of settling chamber or cyclone trouble. Failure of the settling chamber rotary valves will also shut down all SPP conveyors.

e. PROCESS CONTROL

The process control for the cyclone separator is the continuous discharge of the separated material. No accumulation of separated dust can be permitted within the cyclone proper, or within the dust hopper at a point where the dust level would be within the action of the cyclone vortex. Any such accumulation will result in re-entrainment of separated dust and reduced cyclone efficiency. Since this is a negative pressure installation, a rotary valve is used as an airlock. The valve is designed to be in a normally closed position, preventing air leakage into the unit. When a sufficient accumulation of separated solids builds up in the hopper above the valve, the valve opens, discharges the solids then closes, starting the cycle again. This operation of the valve is automatic and should be routinely monitored to ensure proper operation.

(13) VENTURI PARTICULATE SCRUBBER WITH CYCLONE SEPARATOR

a. DESCRIPTION

The gas stream exiting the dual cyclone separator enters a venturi scrubber for removal of fine particulate material. The venturi scrubber is the primary particulate control device ensuring compliance with air emission standards. The venturi scrubber consists of a wet approach venturi and a cyclonic entrainment separator.

The dust laden gas stream enters the gas inlet of the wet approach venturi where scrubbing liquid (plant effluent) is introduced through large diameter, open pipes. The liquid comes in tangentially at the top of the venturi to provide a continuous swirling liquid flow (self-cleaning action) to the liquid distributing shelf. The scrubbing liquid uniformly overflows the shelf and down the converging section creating a completely wetted surface to the dirty gas. As the liquid spins and flows downward by gravity into the throat it comes in contact with the gas which is increasing in velocity due to the geometry of the scrubber. The impact of the gas on the scrubbing liquid creates a highly turbulent mixture in which the gas breaks up the liquid into fine droplets which entrap the dust particles. The captured dust and liquid droplets are separated by centrifugal action and are discharged at the bottom of the separator while the clean gas discharges at the top of the separator.

b. NORMAL OPERATION

The normal operation of the venturi particulate scrubber and cyclone separator is for the units to be online continuously while the SPP is in operation.

c. START-UP PROCEDURES

1. Start-up

- Check internals of ductwork, venturi, separator, recycle tank, etc. to assure that equipment is free of debris and foreign matter that might plug piping, drains, pumps, etc.

- Open the sight ports at the top of the venturi.

- Fill the system with scrubbing liquid by opening scrubber water valves. Check to see that liquid is being fed evenly to venturi pipes and that liquid flows evenly on the shelf. Be sure that liquid flows from one pipe to the other on the shelf and completely covers the converging section.

- Increase liquid rate, if necessary, to make sure that there are no dry spots on the converging section.

- Close sight ports.

- Place adjustable throat damper in the vertical or fully-open position.

- Start the ID fan and read the differential pressure across the venturi. If an increase is required, reduce the throat area by closing down the throat damper slightly. If a decrease is required, reduce the liquid rate slightly.

- After the gas flow has reached equilibrium, it is recommended that the unit be examined internally to ascertain whether there is material buildup, sufficient scrubbing liquid, etc.

d. MONITORS AND ALARMS

The following items should be monitored during equipment operation:

- Scrubbing liquid flowmeter to measure the liquid flow to the venturi.

- Differential pressure instrument to measure the pressure drop across the venturi.

- Temperature indicator to measure outlet temperature downstream of the separator.

- Liquid level control device and control valve to control the flow of make-up liquid into the system.

- Pressure taps to allow measurement of pressure drops across the venturi throat and at the separator outlet.

e. PROCESS CONTROL

The efficient operation of the venturi scrubber and cyclone separator will have an impact on the afterburner air pollution control process. The venturi scrubber can be viewed as the preliminary step in the air pollution control process. As much of the particulates as possible should be removed upstream prior to the afterburner so that particulates do not end up as deposits in the afterburner energy recovery chamber.

The afterburners energy recovery chamber(s) will gradually accumulate fine particulate matter not removed by the venturi particulate scrubber and cyclone separator. While afterburner is designed to burn out the deposited material, only the organic fraction is burned out (oxidized to CO_2 and H_2O vapor) with the inorganic fraction remaining. It is therefore important that the venturi scrubber and cyclone separator operation be monitored and adjusted to obtain a high efficiency of particulate matter removal.

The cleaning efficiency of a venturi scrubber is largely dependent upon the pressure drop across the venturi throat, with the efficiency increasing with an increase in pressure drop. Thus, the unit should be operated at as high a pressure drop as practical within available pressure limits. This is independent of whether the pressure drop is maintained by liquid rate or by flowing gas volume.

The operation of the venturi scrubber is primarily controlled by the amount of liquid in contact with the gas at the throat. Since there is a fixed rate of scrubbing liquid (280 gpm), the pressure drop across the venturi increases as the gas flow in increased. Gas flow rate is adjusted by adjusting the throat of the venturi.

A manual, externally adjustable single blade damper type throat is provided to reduce the cross-sectional area of the throat which compensates for larger changes in gas flow. The normal operating position of the adjustable throat damper is vertical which represents a fully open throat. Rotation of the damper towards a horizontal position will decrease throat area and increase venturi pressure drop.

(14) INDUCED DRAFT FAN

a. DESCRIPTION

The cooled gas stream from the cyclone separator enters an induced draft (ID) fan. The ID fan is a constant speed unit that provides a constant system airflow rate. The ID fan is capable of conveying the total exhaust gas flow from the pelletizing process, plus approximately 1,000 ACFM of air from the fugitive dust system. The ID fan provides the static pressure necessary to convert the process gases from the dryer inlet to the inlet to the afterburner air pollution control process.

b. NORMAL OPERATION

Normal operation of the induced draft fan is for the fan to run continuously while the sludge pelletizing system is on-line.

c. START-UP AND SHUTDOWN PROCEDURES

1. Start-up
   - Place the local disconnect in the ON position.
   - Place the REMOTE/LOCAL switch in either REMOTE position for automatic control or the LOCAL position for local manual control.
   - Push START push button.

2. Shutdown
   - Press the STOP push button.

d. MONITORS AND ALARMS

Differential pressure is continuously transmitted to the SDSP, SDSLC and RTU. High or low differential pressure will cause an emergency shutdown. The fan is also monitored for vibration and signals are transmitted to the SDSP, SDSLC and RTU to indicate/alarm upon ID fan failure (this is considered an emergency shutdown condition).

(15) SYSTEM OPERATION

a. NORMAL OPERATION

Control and monitoring of the sludge pelletizing process (SPP) is local and from the sludge drying system panel (SDSP). Push buttons are provided on the SDSP to start and stop each process train. Sequential logic controls the SPP when the SPP mode switch is in the automatic position and the start push button is depressed. When the SPP mode switch is in the manual position, a dedicated start push button located on the graphic portion of the SDSP will start its assigned equipment. The sequential logic to accomplish this is contained within the SDSLC. When the SPP mode switch is in the manual mode, a dedicated start push button located on the graphic portion of the SDSP will start its assigned equipment. The personnel and equipment protective interlocks are active in both the automatic and manual modes of operation.

JOG/RUN/REMOTE switches are provided with the local (field) controls so that the operator can select manual control or sequential control from the logic programmed in the sludge drying system programmable controller(s).

When the JOG/RUN/REMOTE switch is in the JOG position, all interlocks are bypassed and the motor for that switch will run as long as the start push button is pushed in. When the local JOG/RUN/REMOTE switch is in the RUN position, the operator can start a motor from its local control position with the personnel and equipment interlocks active. The REMOTE position of the JOG/RUN/REMOTE switch will provide a permissive signal to the SDSLC and also accept a remote start signal from the SDSP or the SDSLC.

b. START-UP AND SHUTDOWN PROCEDURES

1. Start-up

- Fill out prestart-up check list.

- Start up afterburner for train you are bringing on line. Instructions for afterburner start-up:
  - Make sure printer is on, little green light in right hand corner should be on; if not, push button below green light.
  - Push start button on main panel, exhaust fan will come on. Make sure exhaust fan motor amps are between 220-240 on AC amperes meter.
  - Push purge start/purge complete button, purging light will come on. Wait 3 to 5 minutes, purging light will go out and purge start/purge complete light will come on.
  - Push start button on burner "A", pilot on light will come on, then flame on light will come on, pilot light will go off. Look at the flame signal burner "A"

DC micro amperes meter to make sure burner came on. DC microamperes meter should read between 2 to 2.5.

- Repeat previous step for "B" burner.

- Start one of the two air compressors by pushing start button (air compressors to be switched weekly to keep running hours about the same). After compressors are started, check to make sure pressure gauges on both sides of air filter are reading close to one another; if not, filter needs replacing.

- Start Odor Control - turn main power switch on at panel. Make sure all switches are in auto (leave caustic pump switch off unless told otherwise). Push start button, make sure chemical pumps are primed and working correctly.

- Make sure all annunciator lights are clear; if not, refer to troubleshooting section in this manual for possible problem.

- Place control switch in auto and enable your feeds for the train to be brought on line.

NOTE

Be sure to inform all personnel that the train is being brought on line.

- Push start button and wait for all equipment to start, beginning with the silo bin vent and following panel lights backward until dryer combustion fan has started. There is a 20-second delay before ID fan starts.

- Start dryer burner when proper afterburner temperature has been reached (approximately 1500 to 1600 degrees). Instruction for dryer burner start-up can be found in the section headed "Rotary Drum Dryer".

NOTE

Once dryer burner has been started, there is a built-in timer into the PLC program that will shut down the burner if the present outlet temperature is not reached within 20 minutes. During this 20 minutes if for any reason the dryer burner should fail, no alarm will indicate so. It is very important that the operator watch the control panel burner light for at least 25 minutes after the burner has been started. If the light should go out, the burner will need to be restarted. Also, remember during this 20 minute time if the feeds come on and the burner should happen to go out, the pugmills and wet and dry feeds will stay on. If this

happens, promptly disable the feeds. As soon as dryer burner comes up to the desired temperature and the feeds come on, the operator should go up to check the operation of the pugmills.

c. ALTERNATE OPERATION

1. Alternate Operation - Operation of Dryer Only

For testing purposes the dryer may be operated independently (from its own control panel). This testing operation can be performed using the following sequence:

- Check damper positions, verify that afterburner bypass is open, the pelletizer exhaust damper is open and that the afterburner inlet damper is closed.
- Start scrubber water.
- Start dryer ID fan and wait 5 minutes.
- Start dryer burner.

2. Alternate Operation - Operation of Afterburner Only

The afterburner may be operated independently (from its own control panel) in two modes of operation, the test mode and the warm standby mode. The operator can commit to these modes as follows:

(a) Test Mode

- Check damper positions, verify that the afterburner bypass is open, the pelletizer exhaust damper is closed, and that the afterburner inlet damper is open.
- Start afterburner exhaust fan and wait 5 minutes.
- Start afterburner burners. (From this mode the afterburner can go into the warm standby mode of operation.)

(b) Warm Standby Mode

- Change damper positions as follows:
  - Open recirculation inlet damper.
  - Open recirculation duct damper.
- Adjust inlet vanes on afterburner exhaust fan to reduce air flow through afterburner. (Afterburner will go to a lower firing rate since there is less air to heat to 1800°F.)
- Close afterburner inlet damper.

Some conditions will require systematic shutdown of the SPP conveyors but will still allow continued operation of the gas combustion equipment at a low fire. A low fire operation of the combustion equipment will maintain a standby condition of the SPP. This will allow operation of the SPP to proceed within a minimum amount of time. Certain conditions will cause an emergency shutdown of the process. Both conditions are tabulated below.

Systematic Shutdown Because of a Malfunction in the Following Equipment/Operation	Emergency Shutdown Conditions
1. Cyclone	1. Empty Level on wet sludge storage bin.
2. Settling chamber	2. Empty level on recycle fines bin.
3. Vibrating screens	3. Furnace trouble/shutdown.
4. Crusher	4. Dryer trouble/shutdown.
5. Shutdown of Dry Process Conveying Process (DPCP)	5. Afterburner trouble/shutdown.
6. Scrubber	6. ID fan trouble/shutdown.
7. Switching from Auto to Manual at the local or remote station.	7. Personnel safety shutdown.
	8. DPCP shutdown.
	9. SPSLC failure.

<u>Emergency Shutdown</u> (due to conveyors, screen, or crusher failure)

a. Wet conveyors, dry conveyors, screen, crusher, drying drum, and mixer unit.

b. Time delay until operator initiates next alternative step(s).

Alternative 1 Make Quick Repairs then:	Alternative 2 Continue with Emergency Shutdown as Follows:
1. Restart dry materials conveyor, screen, and crusher.	1. Shut down dryer burner.
2. Restart dryer drum rotation.	2. Shut down afterburner burners.
3. Restart mixing unit.	(Time delay 5 minutes)

Alternative 1 Make Quick Repairs then:	Alternative 2 Continue with Emergency Shutdown as Follows:
4. Restart wet sludge bin and recycle conveyors.	3. Shut down dryer ID fan.
	4. Shut down afterburner exhaust fan.

Signals will be transmitted to the SDSP, SDSLC and RTU to indicate an emergency shutdown has occurred.

3. Alternate Operation - Emergency Shutdown

If there is an emergency shutdown due to ID fan, exhaust fan, dryer burner, or afterburner failure the following procedure should be followed:

- Open bypass damper.
- Shut down dryer burner.
- Shut down afterburner burners.
- Shut down all conveyors, mixing units, screen and crusher.
- Stop dryer drum rotation wait 5 minutes.
- Shut down dryer ID fan.
- Shut down afterburner exhaust fan.
- Close bypass damper.
- System control.

Control of the SPP is partitioned into:

- The Sludge Mixing Operation
- The Drying Operation
- The Separation Operation

The control scheme for each operation is described below.

d. PROCESS CONTROL

1. Control Scheme: Sludge Mixing Operation

For each SPP train there are conveyors that transport sludge from the wet sludge storage bin. There are also conveyors in series that transport fine particulates from the recycle bin to the dryer. All of these conveyors have variable speed drives. The variable speed of the first conveyor provides a master speed signal to which the other conveyors are ratio controlled. The control procedure allows a percent blending of fine particulates with the wet sludge (proper blending is necessary so that the sludge material exiting the pug mill mixing unit is of proper consistency).

Controls for the mixing operation are via the SDSP. The ratio speed control signals are interfaced with the SPP. Motor failure, shaft failure, and No Flow conditions are monitored for the sludge mixing operation conveyors and the pug mill mixing unit. Signals are provided to the SDSP, SDSLC and RTU to indicate trouble for each conveyor. Conveyor failure of any one of these conveyors will shut down all conveyors. Personnel safety trips shall shut down and alarm both locally and at the SDSP.

Empty Bin Level and High-High bin level for the recycle fines bin are individual indication/alarm conditions locally and at the SDSP, SDSLC and RTU. Empty and High-High level in the recycle bin is an emergency shutdown condition. High recycle bin levels will automatically cause the recycle fines conveyors to dump fines into the dumpster.

Control of the bin level for the wet sludge storage bins is part of the SDSP logic. This logic controls the bin levels by manipulating the diverter plow on the conveyors downstream of the belt filter presses and the diverter plows on the conveyors that feed wet sludge storage bins. The plows are adjustable to provide for future expansion.

There will be instances when only one train is operated for extended periods. It is not desirable to feed wet sludge into the bin of a nonoperative train. Therefore, switches on the SDSP (and appropriate logic in the programmable controllers) are provided to divert all wet sludge to one storage bin or the other.

When conditions in the bin being fed reach the High-High level, the sludge feed conveyors and belt filter presses will shut down. In addition to the operating logic, signals are sent that indicate an alarm at the SDSP, SDSLC and RTU when an empty bin level condition exits at both drop locations on a wet sludge storage bin. The operating logic also provides emergency shutdown for an SPP train and the WSCP if high sludge levels simultaneously exist at all drop zones in that train's wet storage bins.

2. Control Scheme: Sludge Drying Operation

The dryer furnace controls for each train will provide semi-automatic start-up of the unit. The controls will have automatic safety shutdown. Control of the system is microprocessor-based and is interfaced with the SDSLC. The controls have local setpoint control and the capability of receiving a remote setpoint. The process variable inputs to the controls are monitored by the RTU, SDSP and SDSLC.

The furnace-controlled parameters include flame, temperature and pressure.

Ultraviolet flame detectors are used to ensure that the pilot and main flame are ready for start-up and/or shutdown of the furnace. The viewing window is air-purged to ensure a clean and clear view is maintained for the ultraviolet detectors.

Temperature elements (probes) are used to provide furnace temperatures for start-up and shutdown; a temperature element is also used for burner control. The hottest area in the furnace is monitored for temperature and is used for alarm and automatic shutdown.

A pressure element is installed on the furnace discharge to provide positive draft control through the combustion chamber; it is also used for start-up and shutdown. Pressure elements are also used for the burner controls to assure that the burner pressure is higher than the air of combustion pressure. Burner pressure is controlled by the air pressure feed to the mixing head of the burner.

All controls are indicated at a control enclosure located in the furnace dryer area. Controls provided for manual or semi-automatic control of the furnace have LOCAL/REMOTE and HAND/OFF/AUTO switches. All process variable inputs are recorded on circular charts mounted on the SDSP.

Analog controllers and indicating stations are microprocessor-based and are included in the start-up, shutdown and safety algorithms. The furnace start-up sequence is as follows:

- Energize the system.
- Verify that fresh air inlet damper is open.
- Start the fan.
- Verify that fan is operating and check the pressure on the furnace discharge.
- Start purge timer if:
  - Fuel pressure is satisfied,
  - Fresh air inlet damper is open, and
  - The control system is ready.
- After purge is completed, ignite the pilot burner.
- Confirm with flame sensor that pilot is ignited
- If yes, ignite main burner at low fire rate.
- Confirm with flame sensor that main burner is one.
- Confirm at dryer outlet that drying temperature has been reached.
- If yes, signal control logic that dryer is ready.

The furnace safety auto shutdown sequence is initiated when one or more of the following conditions exist:

- Remote shutdown signal
- Burner control system failure
- Flame failure
- Low fuel pressure
- Over temperature
- Loss of draft pressure

A common warning alarm indicating furnace trouble is sent to the SDSP, SDSLC and RTU. This alarm will monitor all problems that would present a threat to safety of plant personnel, equipment, and a potential furnace shutdown. Furnace status is also monitored at the SDSP, SDSLC and RTU.

Additional analog and discrete signals are sent to the SDSP, SDSLC and RTU. These signal indications/alarms for high dryer exit temperature and dryer motion failure.

3. Control Scheme: Separation Operation

The separation operation for each train includes the conveying system that separates the dry product from the gas stream and the operation that separates the dry product into final form pellets and recyclable fines material.

Control of all the conveyors for each train that transports the dry product and recycle fines is part of the automatic control logic for the SPP.

Signals are sent to the SDSP, SDSLC and RTU to indicate when start-up, controlled shutdown or emergency conditions have occurred for the SPP process.

JOG/RUN/REMOTE switches are provided with the local (field) controls from the SDSLC. When the JOG/RUN/REMOTE switch is in the JOG position, all interlocks are bypassed and the motor for that switch will run as long as the start push button is pushed in. When the local JOG/RUN/REMOTE switch is in the RUN position, the operator will be able to start a motor from its local control position with the personnel and equipment interlocks active. The remote position of the JOG/RUN/REMOTE switch will provide a permissive signal to the SDSLC as well as accept a remote start signal from either the SDSP or the SDSLC.

Each conveyor is locally monitored for motor failure, shaft failure and no flow conditions. Common alarm signals are sent to the SDSP, SDSLC and RTU for indication of conveyor trouble.

The rotary valves on the settling chamber and cyclone for each train are monitored locally for malfunction. Signals are sent to the SDSP, SDSLC and RTU for indication/alarm of settling chamber or cyclone trouble.

The vibrating screens and crusher for each train are monitored locally for malfunction. Signals are sent to the SDSP, SDSLC and RTU for indication/alarm of settling chamber or cyclone trouble.

When a failure of any of the SPP conveyors occur (except the conveyor that feeds the recycle fines bins from the vibrating screens), control logic will shut down all the SPP conveyors for that train. Likewise, failure of the settling chamber rotary valve, the cyclone rotary valves, the

crusher or the vibrating screens will shut down all SPP conveyors. During these conditions the gas train equipment will remain operational on "low fire."

The SDSP logic also provides interlocks that automatically cause the conveyors feeding the recycle bin to divert fines to the dumpsters should a high recycle bin condition occur for that train.

D. DRY PRODUCT CONVEYING PROCESS (DPCP)

The purpose of the dry product conveying process (DPCP) is to convey the pelletized product to storage silos.

(1) DRY SLUDGE STORAGE SILO FEED CONVEYORS

a. DESCRIPTION

Two conveyor inlet trains from the sludge pelletizing process area feed storage silos on a first-in first-out basis. Each conveyor train feeds two silos with provision for a third future silo. Silos 1 and 6 are future silos and the first-in first-out logic includes them as well.

b. NORMAL OPERATION

The silo loading operation is a continuous process using first-in and first-out sequencing. The logic assures proper interlocking of all conveyors feeding the silos from the SPP. The silos are filled in the FIFO sequence of silo 5, 3, 4, and 2. Active/Out of Service switches are provided at the SDSP for each silo; this allows the operator to select which silos will be in use. Signals are provided at the SDSP for both OPEN and CLOSED status indication of the silo inlet valves. Each silo has two inlet valves that share the loading time. Shared loading time is accomplished by cycling the inlet valves (open and closed) with adjustable times to ensure equal distribution of material in silo.

c. START-UP AND SHUTDOWN PROCEDURES

Start-up and shutdown of the silo loading operation can be AUTOMATIC or MANUAL. The logic for automatic start-up will assure that each conveyor is started in sequence beginning with the conveyor immediately following the SPP screens as the initial conveyor and ending with the conveyor feeding the silos. The diverters that determine the routing from the pelletizer screens to the silos are controlled by the same first-in first-out logic.

The DPCP logic is programmed in the SDSLC.

Shutdown is automatic and proceeds in the reverse order of start-up. A failure of any conveyors feeding the silos will cause an automatic shutdown of the silo loading operation for that train. Signals are sent to the SDSP, SDSLC and RTU for each conveyor to indicate conveyor trouble (this is an alarm indication at the SDSP).

d. ALTERNATE OPERATION

The operator can override the silo's logic and manually select the silo to be loaded. When the override is removed, the system will return to the sequence at the point it left off. If a silo that has

been removed from operation has material stored in it, the logic will provide an alarm indication on the SDSP.

JOG/RUN/REMOTE switches are provided with the local (field) controls so that the operator can override the automatic controls from the SDSLC. When the JOG/RUN/REMOTE switch is in the JOG position, all interlocks are bypassed and the motor for that switch will run as long as the start push button is physically pushed in. When the local JOG/RUN/REMOTE switch is in the RUN position, the operator will be able to start a motor from its local control position with the personnel and equipment interlocks active. The REMOTE position of the JOG/REMOTE/RUN switch will provide a permissive signal to the SDSLC and accept a remote start signal from either the SDSP or the SDSLC.

e. MONITORS AND ALARMS

Status indication of the silo valves is displayed on the graphics panel of the SDSP and is sent to the RTU. Logic interlocks are provided that do not allow more than one silo valve to be opened. If two valves should open at the same time, automatic shutdown of the silo loading process will occur and an alarm will sound.

A filled silo condition occurs when a high level switch in the silo is activated. This condition causes the silo inlet valve to automatically close and the valve for the next silo in the sequence to open. When all high level switches are activated, an alarm and automatic shutdown of the silo storage area for that train is initiated.

The operating logic provides that whenever an inlet valve is open, a dust bin fan is continuously operated. Closing an inlet valve stops the dust bin fan.

f. PROCESS CONTROL

The main process control parameters for the dry sludge storage silos are silo level and stored product temperature. The silo level is continuously monitored by the silo level measuring system and the product temperature is measured by thermopiles.

E. DRY PRODUCT STORAGE PROCESS (DPSP)

The purpose of the dry product storage process (DPSP) is to store the dry pelletized product in storage silos.

(1) TRUCK LOADING STATIONS

a. DESCRIPTION

There are two truck loading stations with an associated conveyor system that allows loading of the product from the silos. Each truck loading station is associated with 2 silos and 1 future silo. One truck loading station is connected to silo 1 (future), 2, 3, by conveyors. The other truck loading station is conveyor-connected to silo 4, 5, and 6 (future).

b. NORMAL OPERATION

A signal lamp installed at each truck loading station directs the truck driver to the active loading point. A local push button station is located at each loading site to start and stop the loading operation.

c. START-UP AND SHUTDOWN PROCEDURES

Start-up and shutdown for each of the two truck loading stations is initiated locally. A signal is sent to the SDSLC to initiate the silo unloading operation for each station. Once the process is started each silo is unloaded in sequence. Logic interlocks prevent more than one outlet valve to open at the same time. Signals are sent to the SDSP graphic panel to indicate the status of each outlet valve.

The SDSLC operating logic provides that when an outlet valve is running, vibrator(s) on the silo are continuously operated. The vibrator will cease operation when the outlet valve is stopped.

d. ALTERNATE OPERATION

The operator can override the silo's logic and manually select the silo to be unloaded. When the override is removed, the system will return to the sequence at the point it left off. If a silo that has been removed from operation has material stored in it, the logic sill provide an alarm indication on the SDSP.

JOG/RUN/REMOTE switches are provided with the local (field) controls so that the operator can override the automatic controls from the SDSLC. When the JOG/RUN/REMOTE switch is in the JOG position, all interlocks are bypassed and the motor for that switch will run as long as the start push button is physically pushed in. When the local JOG/RUN/REMOTE switch is in the RUN position, the operator will be able to start a motor from its local control position with the personnel and equipment interlocks active. The REMOTE position of the JOG/REMOTE/RUN switch will provide a permissive signal to the SDSLC and accept a remote start signal from either the SDSP or the SDSLC.

e. MONITORS AND ALARMS

A conveyor failure for any conveyor in the truck loading station will shut down the appropriate silo unloading conveyor train. Signals are sent to the SDSLC and graphics panel to indicate conveyor failure for each train.

f. PROCESS CONTROL

The main process control is to ensure that product is being removed from the silos in an orderly fashion so as to make room for more incoming product from the Sludge Heat Drying facility.

(2) <u>STORAGE SILO AND BIN VIBRATORS</u>

a. DESCRIPTION

Each storage silo section cone is equipped with four bin vibrators capable of vibrating at 3600 vibrations per minute. The vibrators are of the electromagnetic type and are designed to provide

continuous duty. The units use a metal striking block to provide positive impact with the storage silo wall. The vibrators ensure ease of unloading the storage bins, prevent "bridging" of the stored product and serve to distribute the pellets evenly throughout the silo.

b. NORMAL OPERATION

The normal mode of operation of the bin vibrator is the automatic mode. The bin vibrator is controlled by a HAND/OFF/AUTO selector switch. Under the automatic mode of operation, the vibrator is activated whenever the discharge rotary valve is energized. The vibrator ceases operation when the discharge valve is closed.

c. START-UP AND SHUTDOWN PROCEDURES

Place the bin vibrator HAND/OFF/AUTO selector switch in the appropriate position for the mode of operation desired. The HAND position is for the manual operation of the unit, the AUTO position for the automatic operation and the OFF position will stop the unit's operation.

d. ALTERNATE OPERATION

The bin vibrator may be operated in a manual mode of operation. Under the hand mode of operation the bin vibrator is manually started by the operator placing the selector switch in the "HAND" position.

e. MONITORS AND ALARMS

Each silo is monitored continuously for silo level. Alarm signals are sent to the SDSP for low or high silo levels.

Thermopiles consisting of suspended thermocouples are installed in each silo to monitor the possibility of spontaneous combustion of the stored materials. The thermocouple wires are inputs to a data logger station.

The data logger performs the following functions:

- Monitors each temperature at appropriate levels in three axes of each storage silo.
- Provides a printed readout for any thermocouple that exceeds a preassigned set point of the stored materials.
- Monitors the rate of change of each thermocouple.
- Provides a printed readout if a thermocouple's rate of change exceeds a preassigned value.
- Provides a common alarm for the thermocouple points to the SDSP for alarm indication that a combustible situation is imminent.

- Transmits temperature measurements to the SDSP.

JOG/RUN/REMOTE switches are provided for each outlet valve at the silos to allow the operator to manually override the automatic controls. For maintenance purposes selector switches are provided at the SDSP that allow the operator to manually remove silos from operation. Logic is also provided that permits the operator to bypass the logic and remove silos from operation.

Signals are sent to the SDSP, SDSLC, and RTU to indicate when start-up, controlled shutdown or emergency shutdown condition shave occurred for the SDCP.

Equipment and personnel safety interlocks are hardwired in the sludge drying system. The failure of a programmable logic controller or power supply will not prevent these interlocks from functioning.

f. PROCESS CONTROL

The process control is to monitor the silo temperatures as displayed by the thermopile readouts reported in the main control room.

F. AIR POLLUTION CONTROL PROCESS

(1) DESCRIPTION

The air pollution control process consists of a regenerative afterburner thermal incineration system which uses temperatures up to 1800°F to burn off organic and particulate contaminants in the sludge heat drying system process air stream.

Through an automatic alternation of the operation of two combustion chamber in conjunction with the ceramic bed afterburner central combustion chamber, the system achieves a high thermal efficiency. The entire process is automatically controlled by a programmable logic controller (PLC).

The PLC is programmed for automatic start-up, shutdown, ramping of incinerator temperate, monitoring of safety interlocks, burnout cycle, operation of all inlet and bypass dampers, operation and the low fire gas recirculation system and dampers and fault annunciation. (See Figures III-SD-HDF-8 through III-SD-HDF-I4.)

(2) NORMAL OPERATION

The afterburner controls for each train provide semi-automatic start-up of the unit and have automatic safety shutdown features. All afterburner controls are microprocessor-base and are interfaced to the SDSP, SDSLC and RTU. The controls have local set point control and the capability of receiving a remote set point. The process variable inputs to the controls are monitored at the SDSP, SDSLC and RTU.

The control of the unit is integrated into the logic of the afterburner. When the afterburner is operating in the LOW FIRE mode and the ID fan is not operating, the bypass damper and inlet damper will both be in the open position. If the dryer system is operated without the afterburner running, the bypass damper is open

and the inlet damper is closed. On failure condition of the afterburner or afterburner exhaust fan, the bypass damper will open and the inlet damper will close. If the dryer system ID fan fails or if the dryer burner malfunctions, the bypass damper will open and the inlet damper will close. On a full system start-up the following sequence occurs:

- The afterburner is purged and brought up to operating temperature; then
- The dryer system is purged and brought up to operating temperature; then
- The bypass damper is closed. After this,
- The dryer is ready to accept wet sludge.

An afterburner recirculation duct is provided to conserve fuel when the afterburner is in a LOW FIRE mode for an extended period of time (several hours). The logic in the afterburner programmable controller controls the position of the recirculation duct damper, the recirculation inlet damper and the afterburner inlet damper.

When the afterburner is in the LOW FIRE mode, the position of the damper are as follows:

RECIRCULATION DAMPER	OPEN
AFTERBURNER INLET DAMPER	OPEN
RECIRCULATION INLET DAMPER (to provide air flow through the afterburner)	MODULATED

In all other operating modes, the recirculation duct and inlet dampers are closed.

(3) START-UP AND SHUTDOWN PROCEDURES

- Fill out prestart-up checklist.
- Start up afterburner for the train to be brought on line.

  Instructions for Afterburner Start-up

  - Make sure printer is on, little green light in right hand corner should be on; if not, push button below green light.

  - Push start button on main panel, exhaust fan will come on. Make sure exhaust fan motor amps are between 220-240 on AC amperes meter.

  - Push purge start/purge complete button, purging light will come on. Wait 3 to 5 minutes; purging light will go out and purge start/purge complete light will come on.

  - Push start button on burner "A", pilot on light will come on, then flame on light will come on, pilot light will go off. Look at the flame signal burner "A" DC micro amperes meter to make sure burner came on. DC micro amperes meter should read between 2 to 2.5.

  - Repeat step previous for "B" burner.

The afterburner safety auto shutdown sequence is initiated when one or more of the following condition exist:

- Remote shutdown signal
- Afterburner control system failure
- Flame failure
- Low fuel pressure
- Over temperature
- Loss of draft pressure

(4) ALTERNATE OPERATION - OPERATION OF AFTERBURNER ONLY

The afterburner may be operated independently from the sludge pelletizing process (from its own control panel) in two modes of operation: the test mode and the warm standby mode. The operator can commit to these modes as follows.

a. TEST MODE

- Check damper positions, verify that:
  - Afterburner bypass is open
  - Pelletizer exhaust damper is closed.
  - Afterburner inlet damper is open.
- Start afterburner exhaust fan and wait 5 minutes (delay).
- Start afterburner burners. (From this mode the afterburner can go into the warm standby mode of operation.)

b. Warm Standby Mode (LOW FIRE mode)

- Change damper positions as follows:
  - Open recirculation inlet damper.
  - Open recirculation duct damper.
- Adjust inlet vanes on afterburner exhaust fan to reduce air flow through afterburner. (Afterburner will go to a lower firing rate since there is less air to heat to 1800°F.)
- Close afterburner inlet damper.

Some conditions will require systematic shutdown of the SPP conveyors but will still allow continued operation of the gas combustion equipment at a low fire. A low fire operation of the combustion equipment will maintain a standby condition of the SPP. This will allow operation of the SPP to proceed within a minimum amount of time. Certain conditions will cause an emergency shutdown of the process. Both conditions are tabulated below.

Systematic Shutdown Because of a Malfunction in the Following Equipment/Operation	Emergency Shutdown Conditions
1. Cyclone	1. Empty Level on wet sludge storage bin.
2. Settling chamber	2. Empty level on recycle fines bin.

3.	Vibrating screens	3.	Furnace shutdown/trouble.
4.	Crusher	4.	Dryer trouble/shutdown.
5.	Shutdown of Dry Process Conveying Process (DPCP)	5.	Afterburner trouble/shutdown.
6.	Scrubber	6.	ID fan trouble/shutdown.
7.	Switching from Auto to Manual at the local or remote station.	7.	Personnel safety shutdown.
		8.	DPCP shutdown.
		9.	SPSLC failure.

Emergency Shutdown (due to conveyors, screen, or crusher failure)

- Wet conveyors, dry conveyors, screen, crusher, drying drum, and mixer unit.
- Time delay until operator initiates next alternative step(s).

	Alternative 1 Make Quick Repairs then:		Alternative 2 Continue with Emergency Shutdown as Follows:
1.	Restart dry materials conveyor, screen, and crusher.	1.	Shut down dryer burner.
2.	Restart dryer drum rotation.	2.	Shut down afterburner burners.
3.	Restart mixing unit.	3.	(Time delay 5 minutes)
4.	Restart wet sludge bin and recycle conveyors.	4.	Shut down dryer ID fan.
		5.	Shut down afterburner exhaust fan.

Signals will be transmitted to the SDSP, SDSLC and RTU to indicate an emergency shutdown has occurred.

(5) ALTERNATE OPERATION - EMERGENCY SHUTDOWN

Due to ID fan, exhaust fan, dryer burner or afterburner failure.

- Open bypass damper.
- Shut down dryer burner.
- Shut down afterburner burners.
- Shut down all conveyors, mixing units, screen and crusher.
- Stop dryer drum rotation (Time delay 5 minutes).
- Shut down dryer ID fan.
- Shut down afterburner exhaust fan.
- Close bypass damper.
- System control.

(6) MONITORS AND ALARMS

A common warning alarm and status indicator is provided at the SDSP, SDSLC and RTU. This alarm will monitor all problems that would present a threat to safety of plant personnel, equipment, and a potential afterburner shutdown.

(7) PROCESS CONTROL

Ultraviolet flame detectors are used to ensure that the pilot and main flame are ready for start-up and/or shutdown of the afterburner. The viewing window is air purged to ensure a clean and clear view is maintained for the ultraviolet detectors.

Temperature elements (probes) are used to provide furnace temperatures for start-up and shutdown. A temperature element is also used for burner control. The hottest area in the furnace is monitored for temperature and is used for alarm and automatic shutdown.

A pressure element is installed on the afterburner to monitor and control the draft pressure through the unit and is used in the start-up and shutdown procedures. Pressure elements are also used for the burner control to assure the burner pressure is higher than the air of combustion pressure.

All controls are indicated at the control enclosure located in the afterburner area. All controls required for manual or semi-automatic control of the afterburner have LOCAL/REMOTE and HAND/OFF/AUTO selector switches. All process variable inputs are recorded on circular charts mounted on the SDSP.

Analog controllers and indicating stations are microprocessor based and are included in the start-up, shutdown and safety shutdown algorithms.

G. WET SCRUBBER ODOR CONTROL SYSTEM

(1) DESCRIPTION

The wet scrubber odor control system treats and effectively eliminate odors from the air withdrawn from the sludge heat drying building. The combined system has a total rated flow capacity of 97,000 cfm (48,500 cfm per chamber) and is capable of continuously treating and removing odorous compounds present in the airstream. The system will continuously provide a treated airstream with an odor level not to exceed 100 odor units. The odor control system includes two mist scrubbers with once-through chemical feed that provide for extended surface and reaction time.

(2) NORMAL OPERATION

The normal operation of the odor control system is a continuous automatic mode of operation. The odor removal is obtained by using a solution of water and sodium hydroxide and sodium hypochlorite with a once-through non-recirculation type system. The sodium hydroxide is automatically controlled by measuring the pH of the reaction chamber effluent and adjusting the sodium hydroxide addition to maintain an established set point. The operation of the chemical feed and dilution system is automatically controlled based on the pH set points.

(3) START-UP AND SHUTDOWN PROCEDURES

a. START-UP

- Start up the compressed air system if it is not on.

- Check salt level in water softener brine tanks and open soft water valve to QUAD liquid metering panel.

- Check level of sodium hydroxide and sodium hypochlorite storage tanks.

- Check indicating lights on the QUAD electric control panel by pushing TEST to test lights.

- Check to see that all selector switches on the QUAD electric control panel are in the AUTO position.

- Push the green system START push button on the QUAD electric control panel. The air compressor will start. The SYSTEM ON and exhaust FAN ON lights will be indicating those devices as being activated. After a short delay the NaOCL ON, WATER SOLENOID ON, AIR SOLENOID ON lights will indicate the result of the air compressors taking a few moments to achieve proper operating pressures. Lights indicate the following as being activated: System ON, Fan ON, NaOCl ON, NaOH ON, Water solenoid valve - OPEN - water flowing, compressed air solenoid valve - OPEN - compressed air flowing.

- Regulate water flow rate in the flowmeter for the predetermined water rate setting by adjusting the water pressure regulator.

b. SHUTDOWN

To shut down the QUAD odor control system, the sequence of operations will be as follows:

- Push the red system STOP button.

The exhaust fan will stop and the exhaust FAN light will turn off immediately.

The chemical pumps will stop, the NaOCl ON and NaOH ON lights will turn off immediately.

After a time delay of 1 to 2 minutes, the water solenoid switch will close, shutting off the water flow, and the WATER SOLENOID ON light will turn off.

After an additional delay of 1 to 2 minutes, the AIR switch will close, shutting off the compress air flow, and the AIR SOLENOID On light will turn off approximately 1 minute after the air solenoid valve closes.

(4) ALTERNATE OPERATION

The odor control system is capable of manual and independent operation.

(5) MONITORS AND ALARMS

The odor control system is monitored for NaOCl tank level, NaOH tank level and scrubber pool pH. System alarms are: emergency eyewash shower, low air pressure-compressor fail, low NaOCl level, low NaOH, low water flow, high pH and low pH.

(6) PROCESS CONTROL

The odors are treated chemically with a dilute solution containing sodium hydroxide (NaOH - caustic) and sodium hypochlorite (NaOCl - bleach) by spraying the solution into the incoming air stream within the reaction chamber. The caustic and bleach are stored in storage tanks.

After treating the odors with the chemical solution spray, the outlet liquid stream is monitored by a pH sensor. To control pH, the metering pump supplying caustic can be adjusted. The deodorized air stream is vented to the atmosphere.

The chemical solution spray is generated through special nozzles. The odor control system depends upon proper functioning of these nozzles, since extremely fine atomization of the chemical solution is essential. Any plugging or malfunctioning of the atomizing nozzles results in inadequate odor control. Power for atomization is provided by compressed air.

While a minimum of maintenance is required after the system is set to operate, attention should be paid to the water and chemical flow rates to maintain optimum deodorization efficiency.

A periodic "sniff test" at the "sniff tube" provided from the exhaust stack is the best test to assure continue odor removal effectiveness of the system.

All settings for normal operation will be determined by testing for the following:

- Water flow rate
- Compressed air pressure at nozzles
- Chemical pumps, speed and stroke
- pH control set point

a. OPERATING - CHEMICAL SOLUTION FLOW

The QUAD odor control system supplies a dilute solution of chemicals, sodium hydroxide (caustic) and sodium hypochlorite (bleach), to be atomized within the reaction chamber. In order to supply the required solution strength of chemicals, a measured amount of softened water is delivered to the QUAD chemical metering panel. Two metering pumps will inject the chemicals into this water stream.

1. Initial control of the soft water is as follows:
   - Solenoid valve to open and allow water flow into the liquid meter system.

- Water pressure regulator to adjust the water to the required flow rate.
- Diaphragm check valve to prevent back flow.
- Flowmeter to enable adjustment of water flow rate setting.
- Pressure gauge to indicate the pressure in the liquid line.

2. Control of the sodium hydroxide (caustic) pump is as follows:
   - Sodium hydroxide is stored in a storage tank.
   - The pump plastic suction line is inserted into a tee in the chemical supply line from the storage tank.
   - The pump outlet plastic line is inserted into a tee in the dilute chemical line.
   - The pump is plugged into the 4-gang receptacle for power. Control is from a frequency converter which receives a signal from the pH meter. The pH meter receives a signal from the pH probe located in the liquid drain line.
   - Initial setting of the NaOH pump is made during start-up and testing. Both pump stroke and frequency are set at that time to provide sufficient caustic in the chemical solution line to control the effluent pH as preset in the pH meter.

3. Control of the sodium hypochlorite pump area is as follows:
   - Sodium hypochlorite is stored in a storage tank.
   - The pump plastic suction line is inserted into the chemical supply line from the storage tank.
   - The pump outlet plastic line is inserted into a tee in the dilute chemical line.
   - The pump is plugged into the 4-gang receptacle for power.
   - Pump control is manual.
   - Initial setting of the sodium hypochlorite pump is made during start-up and testing. Both pump stroke and frequency are set at that time to provide maximum odor reduction. These settings will be based upon observations taken from the sniff tube and adjusted accordingly.
   - Operator monitoring of the sniff tube is required to determine whether the pump settings should be changed. Additionally, a sample of the effluent liquid stream can be checked for residual hypochlorite to minimize any waste of bleach.

4. Chemical solution filtration and sampling:
The final chemical solution passes through a 50 micron filter to remove the particulate which could cause plugging of the atomizing nozzles.

After all metered chemicals are added to the water stream, there is a sampling drain. This drain can be used to retrieve a portion of the chemical solution for testing. This procedure can be used to test for hypochlorite in the chemical solution prior to reaction. An additional test for hypochlorite can be made on the liquid effluent in the drain from the reaction chamber to determine the amount of residual chlorine.

b. CHECK FOR HYPOCHLORITE
A test kit is used for the determination of entering and residual NaOCl from the reaction chamber. The kit is manufactured by Hach Manufacturing Company, P.O. Box 389, Loveland, Colorado 80539, (303) 669-3050 - Model No. CN-21P, Catalog Number 1447-00.

c. OPERATING COMPRESSED AIR FLOW
The compressed air system provides the necessary airflow to the nozzles for atomization of the liquid chemical stream. In the compressed air line after the receiver, the following items are installed for control of compressed air flow:

- Differential pressure switch to close at air pressure of 70 psig and open at 60 psig.
- Solenoid valve to open and allow flow of compressed air to the system.
- Air pressure regulator to set the compressed air flow to the nozzles.
- Air filter to remove particulates and condensed water from the compressed air line. The air filter has a manually operated drain.
- Pressure gauge at the nozzles to check the proper amount of air pressure at the inlet to the nozzles (80 - 90 psig).

In order to obtain ideal atomization, the air pressure at the nozzles should be maintained at 80-90 psig. Care should be taken to see that the procedures for operation and maintenance of the air compressors are followed as prescribed by the manufacturer.

NOTE

The pump settings, as determined at the time of start-up, are indicative of the influent air conditions at that time. Should the odor constituents in the influent air change, the caustic pump will change speed automatically as required to maintain the preset pH; the sodium hypochlorite pump settings will be changed manually as required.

d. PROCEDURE FOR ACID WASHING OF QUAD SPRAY NOZZLES

CAUTION

Safety equipment must be worn when acid washing. Acid gloves, eye protection and protection suit.

When you start to see a drop in the flow the problem is usually scale building up on reactor spray nozzles. Acid washing will usually correct this problem; procedure is as follows:

NOTE

While acid washing the system you will probably get a low pH alarm. Acknowledge alarm and it will clear when chemical pumps are put back on line.

- Turn off both chemical feed pumps (NaOH & NaOCl).
- Let system run for 2 to 3 minutes with only water to flush all chemical out of line.
- Put acid pump suction line into acid container. Plug in acid pump and turn pump up to its highest setting.

NOTE

When pumping acid into lines, water valve should always be open and water flowing. Never run acid into PVC lines with no water; the lines can heat up and rupture.

- Observe the water flow gpm through the flowmeter. It should gradually return to normal flow readings within 2 to 5 minutes.
- Shut off acid pump and unplug it.
- Flush system with water for about 2 minutes.
- After flushing is complete, Chemical pups (NaOH & NaOCl) can be turned back on.

NOTE

If system flows do not return to normal, scale may not have been the problem. Check to make sure that the water filter is clean. If there is a pressure drop across the filter, it needs replacing. If the filter checks out okay, then you will have to go up top of the quad tower and manually clean the spray nozzles.

H. COMPRESSED AIR SYSTEM

(1) DESCRIPTION

The compressed air system consists of two air compressors, one receiving tank and controls and related support equipment. The air compressors are electric motor-driven direct-connected, internally cooled, continuous duty rotary screw air compressors (one for standby), suitable for unattended service with a 75 hp, 460 volt, 3 phase, 60 hertz, 1770 rpm, open drip proof, squirrel cage induction type, electric motors. The compressed air system serves to provide pressurized air for the wet scrubber odor control system reaction chamber as well as to all pneumatically operated equipment in the sludge heat drying system.

(2) NORMAL OPERATION

Normal operation of the compressed air system is the automatic mode with the air compressors starting and stopping automatically based on the system pressure set points.

(3) START-UP AND SHUTDOWN PROCEDURES

a. START-UP

- Place the local disconnect in the ON position.
- Place the HAND/OFF/AUTO selector switch in the AUTO position.
- Press the POWER push button.
- Press the AUTO push button.
- Press the START push button.
- Open all valves necessary to route air from the air receiving tank to the system air lines.

b. SHUTDOWN

- Press the STOP push button.

(4) ALTERNATE OPERATION

The air compressors can be operated in a manual mode of operation. This mode of operation should only be used when the system is to be continuously monitored or for maintenance purposes.

a. START-UP

- Place the local disconnect in the ON position.
- Place the HAND/OFF/AUTO selector switch in the HAND position.
- Press the POWER push button.
- Press the RUN push button.
- Press the START push button.
- Open all valves necessary to route air from the air receiving tank to the system air lines.

b. SHUTDOWN

- Press the STOP push button.

(5) MONITORS AND ALARMS

The compressed air system has the following gauges to monitor system parameter: sump pressure (0-200 psi); line pressure (0-200 psi); discharge temperature (0-250°F, 0-120°C); air filter pressure change (0-30

inches, 0-76 cm); fluid filter pressure change (0-30 psig, 0-200kPad); separator pressure change (0-15 psig, 0-100kPad), elapsed hour meter (1/10 hour).

(6) PROCESS CONTROL

Process control for the air compressor system consists of ensuring that adequate air pressure is provided to all points of the system. Condensate traps should be routinely drained and all lines routinely checked for leaks.

III-SD-FPS FILTRATE PUMPING STATION AND BACKFLOW STRUCTURE

A. GENERAL

The Filtrate Pumping Station consists of the following equipment and systems:

- Filtrate Pumping Station Wet Well
- Pump Equipment
- Backflow Structure

The Main Drain at the Howard F. Curren Advanced Wastewater Treatment Plant carries recycle flows to the Main Pumping Station to combine with primary effluent. The recycle flows consist largely of backwash water from the Denitrification Filters and filtrate from the Sludge Dewatering Building. At peak recycle conditions when 3 or 4 filters are in backwash or a nitrogen release cycle simultaneously, the water level in the filtrate drain system at the Sludge Dewatering Building could exceed the floor elevation at the lowest point in the building. To prevent backflow of recycle water to the Sludge Dewatering Building, the Filtrate Pumping Station and the Backflow Structure were designed and constructed under Divisions 5H3A and 5H2A, respectively.

Figure III-SD-FPS-1 shows the Filtrate Pumping Station and Backflow Structure. Under normal operation, filtrate flow from the Sludge Dewatering Building will not enter the Filtrate Pumping Station but instead will flow directly through the Backflow Structure to the Main Drain. In the case of backflow conditions in the Main Drain, the water level in the Main Drain will close the flap valve in the Backflow Structure and force Sludge Dewatering Building filtrate to flow into the Filtrate Pumping Station through a 24-inch concrete pipe. Effluent is discharged from the Filtrate Pumping Station through two 12-inch filtrate pipes, from two submersible pumps, to the Backflow Structure which is directly connected to the Main Drain.

Refer to Table III-SD-FPS-1, Filtrate Pumping Station - Facility Equipment Summary for control numbers, manufacturers, equipment capacities and operation, maintenance, contract plan and shop drawing references. Refer to the section the Contractor's O & M Manual for Manufacturer's Service Manuals pertaining to the Filtrate Pumping Station equipment.

B. FILTRATE PUMPING STATION WET WELL

(1) DESCRIPTION

The Filtrate Pumping Station Wet Well shown on Figure III-SD-FPS-2 is a circular basin 12 feet in diameter with a depth of approximately 18 feet. The Filtrate Pumping Station will be active only during peak recycle conditions in the Main Drain.

C. PUMPING EQUIPMENT

(1) DESCRIPTION

Under conditions which the operation of the Filtrate Pumping Station is necessary, only one of the submersible pumps is required, the second pump is a standby.

(2) NORMAL OPERATION

The two constant speed submersible pumps located in the wet well of the Filtrate Pumping Station can be operated either manually or automatically. Each pump is supplied with a HAND-OFF-AUTO selector

switch located on the Control Panel adjacent to the Filtrate Pumping Station. The Control Panel has a LEAD-LAG switch to select which pump will be the lead pump and which will be the lag pump.

A check valve is located at the 12-inch filtrate discharge leading into the Backflow Structure from Pump No. 1 of the Filtrate Pumping Station. This valve ensures that during peak operations, backwash from the Main Drain does not flow back through the 12-inch filtrate discharge into the Filtrate Pumping Station Wet Well (see Figure III-SD-FPS-1). The discharge pipeline from Pump No. 2 is located above any possible water elevation in the Backflow Structure and does not need a check valve.

(3) START-UP AND SHUTDOWN PROCEDURES

When the HAND-OFF-AUTO selector switch for each pump is placed in the AUTO position, the operation of the pumps is controlled by liquid level sensed by a bubbler system. The bubbler system measures the water level in the wet well and activates the pumps using two pressure switches set to energize the appropriate pump according to the design set point elevations as shown on Figure III-SD-FPS-2.

When the HAND-OFF-AUTO selector switch is placed in the HAND position, the selected pump will operate until the switch is placed in the OFF or AUTO position.

Each pump is provided with a running indicator light and a pump failure light at the annunciator located in the Control Building.

For maintenance, the pumps can be removed from the wet well using the guide rail and chain configuration shown in Figure III-SD-FPS-2.

(4) MONITORS AND ALARMS

The annunciator for the Filtrate Pumping Station is located at Motor Control Center MCC-501 in the Control Building at the Sludge Storage Tanks. If the lead pump fails to operate and the lag pump is energized by the bubbler system, indicator lights at the Control Building will indicate both the lag pumps operation and the failure of the lead pump.

In the case that the pumps or the bubbler system malfunctions and the water level in the wet well exceeds normal elevations, a float switch will energize an alarm in the Control Building indicating that the level in the wet well has exceeded normal operating conditions.

D. BACKFLOW STRUCTURE

(1) DESCRIPTION

The Backflow Structure is located between the Manhole No. 7 and the Main Drain. As previously described, the purpose of the Backflow Structure is to function with the Filtrate Pumping Station to eliminate possible flooding of the Sludge Dewatering Building during peak operations.

(2) NORMAL OPERATION

The Backflow Structure is provided with a 24-inch flap valve that will not allow water to flow back to the Sludge Dewatering Building during peak operation in the Main Drain. The flap valve can be isolated for maintenance by using the stop log groove shown in Figure III-SD-FPS-1.

III-ST-STB SLUDGE TREATMENT BUILDING AND THICKENING TANKS (030 AND 026)

A. GENERAL

The Sludge Treatment Building is a two-level structure connected to the sludge thickening tanks. The purpose of the Thickening Tanks is to thicken waste activated sludge (WAS) as a supplement to the Belt Thickening Facilities. The Sludge Treatment Building houses equipment for the Thickening Tanks and serves as the junction point for a variety of sludge pipelines.

The following equipment and systems are provided in the Sludge Treatment Building and Thickening Tanks:

- Flow Control
- Sludge Distribution Chamber
- Sludge Mixer
- Thickening Tank Mixing Chamber Mixers
- Sludge Thickening Tanks
- Thickening Tank Collectors
- Thickened Sludge Pumping Equipment
- Rate Controller Equipment
- Venturi Meter
- Magnetic Flowmeters
- Polymer Storage and Handling Equipment
- Waste Sludge Pumps
- Dewatering Pump
- Sump Pumps
- Hoisting Equipment
- Plant Air
- Effluent Water
- Plant Water
- Sample Sink
- Ventilation
- Power Distribution System

Refer to Table III-ST-STB-1, Sludge Treatment Building and Thickening Tanks - Facility Equipment Summary, for control numbers, manufacturers, equipment capacities and operation, maintenance, contract plant and shop drawing references. Refer to Contractor's O&M Manual for Manufacturer's Service Manuals pertaining to sludge treatment and thickening equipment.

B. PROCESS CONTROL

A piping schematic diagram for the Sludge Treatment Building is shown on Figure III-ST-STB-1. The Sludge Treatment Building and Thickening Tanks serve to supplement and backup the Belt Thickener Building. Generally, the Belt Thickener Building will be chosen first to thicken WAS since the sludge can be made thicker at the Belt Thickening Units. Typically, the Belt Thickener Building produces a sludge with a solids concentration of 5 to 7 percent while the Thickening Tanks will produce a sludge with a solids concentration of 3 to 4 percent when polymer is added and 2.0 to 2.5 percent without polymer. Note that thicker sludges may be

produced at the Thickening Tanks if the thickened sludge pumps could handle the thicker material, but experience has shown that at concentrations much above 4 percent solids the discharge pipelines will clog. It is important to obtain a thick WAS to reduce the volume to be sent to the Anaerobic Digesters. A reduced volume means a longer detention time in the digesters resulting in more complete digestion and the production of more sludge gas.

When the Thickening Tanks are chosen to operate, the process control largely consists of controlling the flows to the tanks, as noted in the subsection below headed "Flow Control". Once the flows are selected and the system is operating, the WAS flow will be relatively constant and control will consist of changing the amount of polymer being fed into the tanks. The operator should check the sludge blanket level in the tanks and the flow of thickened sludge on a regular basis. Centrifuge tests at the Sludge Treatment Building should also be performed on sludge samples on a periodic basis.

NOTE

Testing of the solids concentrations will also be performed in the laboratory. Experience has shown that the concentration obtained using the centrifuge test is about one half of that obtained in the laboratory.

A rising sludge blanket in the Thickening Tanks is an indication of a thicker sludge being produced. Thicker sludge will also result in a lower flow rate indication on the flow meters showing the thickened WAS. If the above occurs and the centrifuge tests indicate a concentration of about 2 percent or greater (which will be an actual concentration of about 4 percent in the laboratory), the quantity of polymer should be reduced by changing the pump speed or stroke at the polymer blending equipment to prevent the sludge from becoming too thick and clogging the discharge pipelines.

Dilution water is often added to the gravity thickeners to keep hydraulic loads high enough to prevent septic conditions from occurring in the tank. Dilution water may be added and controlled as explained in the subsection below headed "Flow Control".

The influent sludge, polymer solution, and dilution water are blended prior to application to the tanks in the Thickening Tank Mixing Chambers. The mixer is run continuously in the chamber to produce a homogeneous blend.

C. FLOW CONTROL

A piping schematic diagram for the Sludge Treatment Building is shown on Figure III-ST-STB-1. It is from the Sludge Treatment Building that flow to the Thickening Tanks and the Belt Thickener Building is controlled. WAS from Sludge Pumping Station No. 2 enters the building from the north. In addition, WAS pumps in the Sludge Treatment Building serve the Diffused Air Reactors and discharge to the incoming WAS lines at the north end of the building.

In the case when all WAS is to go to the Belt Thickener Building, all valves going to the Thickening Tanks will be closed and the valves upstream of meter FE-9 will be open. All WAS will then flow though meter FE-9 and go to the Belt Thickening Facility.

In the case when part of the WAS is to go the Belt Thickener Building and part is to go to the Thickening Tanks, the flow must be regulated either manually or by rate control. To manually control the flow to the Thickening Tanks, open the valve upstream of meter FE-7, which measures the total flow to the Thickening Tanks, and observe the flow indicator FI-7 which is located near the valve. Open the valve until the flow to both Thickening Tanks is at the selected level. By leaving the valves associated with meter FE-9 open, the remaining flow will go to the Belt Thickener Building.

Under alternate operation, the flow to the Thickening Tanks can be regulated by Rate Controller MRC-21. To do this, leave the valves associated with meters FE-7 and FE-9 open and set the dial on the Belt Thickener Building Control Panel to the desired sludge flow rate. Under this mode of operation, the valve downstream from meter FE-7 will automatically adjust position to maintain the preset sludge flow to the Thickening Tanks, despite of variations in the influent sludge flow. Any remaining flow will be diverted to the Belt Thickener Building.

In the case when all WAS is to go to the Thickening Tanks, close the valves associated with meter FE-9 and open all valves associated with meter FE-7.

Dilution water must also be controlled. The dilution water is taken from the Filter Effluent Channel and the Dilution Water Pumps are located in Filter Building No. 1. When the Thickening Tanks are in service, the Dilution Water Pumps should be started and run continuously. The flow may be throttled in the Sludge Treatment Building to the desired rate to each tank. Experience has shown that a flow of 140 gpm generally produces the best results.

The flow of thickened sludge from each tank must also be controlled. Under normal operation, the desired pumping rate is selected at the respective flow indicating controller associated with each tank. As the sludge becomes thicker and harder to pump, the pump drive speed will be automatically increased to match the selected flow. Conversely, should the sludge become thinner, the pump drive will automatically decrease in speed.

D. SLUDGE DISTRIBUTION CHAMBER

The Sludge Distribution Chamber is a rectangular structure approximately 10 feet wide by 13.5 feet long with a liquid depth of approximately 5 feet. The chamber has a volume of approximately 5,000 gallons and is no longer is service.

E. SLUDGE MIXER: ST-SM-1

Sludge Mixer ST-SM-1 is located on the Sludge Distribution Chamber and is no longer in service.

F. THICKENING TANK MIXING CHAMBER MIXERS

(1) DESCRIPTION

The thickener mixing chamber mixers are provided to completely mix influent flows of sludge or supernatant and dilution water. The mixing equipment consists of two (2) Mixers, designated ST-SM-1 and 2. Each mixer is an axial flow type mixer with dual impellers, designed to thoroughly mix WAS, polymer solution, and dilution water.

Each Thickenmg Tank Mixing Chamber is a rectangular basin 6 feet wide by 7 feet long with liquid depth of 10.67 feet. Each mixing chamber has a volume of approximately 3,300 gallons.

Each mixing chamber receives the influent sludge, dilution water, and polymer solution going to the associated Thickening Tank.

(2) NORMAL OPERATION

Under normal operation, when a sludge thickening tank is in service and dilution water is being used, the associated mixer is required to operate continuously.

(3) START-UP AND SHUT-DOWN PROCEDURES

To start up and shut down the thickener mixing chamber mixers, use the following procedures:

a. START-UP

- Place the ON-OFF switch at the unit in the ON position
- Close the circuit breakers on the associated Motor Control Center MCC-52 or 53
- Depress the associated START push button on the Sludge Thickening and Pumping Equipment Control Panel (ST-PECP-MCC-55)

b. SHUT-DOWN

- Depress the STOP push button on the ST-PECP-MCC-55

NOTE

If maintenance is to be performed on a mixer, place the ON-OFF switch at the unit in the OFF position and engage the locking device and open the circuit breaker on the associated Motor Control Center MCC-52 or 53. Follow approved **Lockout/Tagout** procedures (See Chapter VI, Safety).

(4) MONITORS AND ALARMS

A red running indicator light and an elapsed time meter are provided for each mixer on its associated motor control center.

G. SLUDGE THICKENING TANKS

(1) DESCRIPTION

The two Sludge Thickening Tanks are provided to increase the solids concentration of the waste activated sludge. Each Sludge Thickening Tank is 55 feet in diameter with a side water depth of 10 feet. Each tank has a conical bottom and is provided with a sludge collector, influent well, and effluent weir and trough.

Flow enters each thickening tank from the Thickener Mixing Chamber through the center well and effluent from the Thickening Tanks is controlled by V-notch weirs on the circumference of each Thickening Tank. Overflow from the tanks flows by gravity to Junction Chamber No. 3 through the 14-inch Thickening Tank Overflow.

Concentrated sludge in the Thickening Tanks is conveyed by the thickening tank collectors to the center of each tank and is removed by the thickened sludge pumping equipment as described in the subsection headed "Thickened Sludge Pumping Equipment".

(2) NORMAL OPERATION

Under normal operation, one sludge thickening tank may be in operation to supplement the Belt Thickening Equipment. For a complete discussion of the various flows to the tanks under normal and alternate modes of operation, see the subsection headed "Flow Control".

(3) START-UP AND SHUT-DOWN DEWATERING PROCEDURES

To start up, shut down, and dewater the sludge thickening tank(s), use the following procedures:

a. START-UP

- Refer to Figure III-ST-STB-1 and position the manually operated valves on pipelines to and from each sludge thickening tank to accommodate the desired flow pattern and flow rate
- Start up the following equipment as described elsewhere in this section: thickening tank collectors, sludge blanket level monitoring system, thickener mixing chamber mixers, thickened sludge pumping equipment, and rate controller equipment

b. SHUT-DOWN

- Close the manually operated valves on the pipelines to and from the sludge thickening tank to permit flow to be stopped (see Figure III-ST-STB-1)
- Shut down the following equipment as described elsewhere in this section: thickening tank collectors, sludge blanket level monitoring system, thickener mixing chamber mixers, thickened sludge pumping equipment, and rate controller equipment

c. DEWATERING

- Close the manually operated valve in the thickening tank influent line
- Shut down the following associated equipment as described elsewhere in this section: thickener mixing chamber mixers and rate controller equipment
- Allow the thickening tank collectors and thickened sludge pumping equipment to operate until the tank is empty

- As the liquid level drops in the tank, wash down tank using the effluent water hose connections provided
- When the tank is empty, continue washing down tank and equipment located therein and operate pumping and collecting equipment as required until the tank is completely cleaned and empty.
-

H. THICKENING TANK COLLECTORS: ST-TC-1 AND 2

(1) DESCRIPTION

The thickening tank collectors are provided to convey thickened sludge to the thickening tank sludge pump. The Thickening Tank Collectors are designated ST-TC-1 and 2.

Each thickening tank collector mechanism consists of the drive unit, maintenance platform, bridge structure, drive column, and two (2) rake arms with plow blades. Each mechanism rotates at approximately 0.08 revolutions per minute and is designed to rake all concentrated sludge to the central sludge sump.

(2) NORMAL OPERATION

Each collector is provided with an ON-OFF switch at the unit with a locking device for the OFF position and START-STOP push buttons on the Sludge Thickening and Pumping Equipment Control Panel MCC-55 (ST-PECP-MCC-55).

Under normal operation, when the ON-OFF switches are in the ON positions and the START push buttons on the ST-PECP-MCC-55 are depressed, the collectors will run continuously.

(3) START-UP AND SHUT-DOWN PROCEDURES

To start up and shut down the thickening tank collectors, use the following procedures:

a. START-UP

- Place the ON-OFF switches at the units in the ON positions
- Close the circuit breakers for each thickening tank collector on its associated Motor Control Center MCC-52 or MCC-53
- Depress the START push button on the Sludge Thickening and Pumping Equipment Control Panel MCC-55 (ST-PECP-MCC-55)

b. SHUT-DOWN

- Depress the STOP push button on the ST-PECP-MCC-55

NOTE

If maintenance is to be performed on a collector, place the ON-OFF switch at the unit in the OFF position and engage the locking device, and open the circuit breaker on MCC-52 or MCC-53. Follow approved **Lockout/Tagout** procedures (See Chapter VI, Safety).

(4) MONITORS AND ALARMS

Each thickening tank collector drive is protected by a two-stage torque limit switch overload device. If the starting or operating torque exceeds a preset value, the first stage of the overload device will close an alarm contact, and if the torque continues to rise and exceeds a second, higher, preset value, the overload device will shut down the collector drive. The annunciator panel at Motor Control Center MCC-53 contains indicating lights and alarms for the two-stage torque limit switch device for each grit collector drive.

The remote transmission unit continuously scans and transmits the condition of all alarm points in the Sludge Treatment Building to the SCADA System.

Each thickening tank collector mechanism is provided with operational indicating lights on the ST-PECP-MCC-55, and with a red running indicating light and elapsed time meter on its associated Motor Control Center MCC-52 or MCC-53.

I. THICKENED SLUDGE PUMPING EQUIPMENT: ST-TSP-1A, 1B, 2A, AND 2B

(1) DESCRIPTION

The thickened sludge pumping equipment is provided to automatically pump thickened sludge from the sludge thickening tanks to the Mixed Sludge Pumping Station and to the Control Building and digested sludge storage tanks. For a complete discussion of the various flows under normal and alternate modes of operation, see the subsection headed "Flow Control".

The thickened sludge pumping equipment consists of four (4) Thickened Sludge Pumps, designated ST-TSP-1A, 1B, 2A, and 2B located in the Sludge Pumping Stations Nos. 1 and 2 in the Sludge Treatment Building (see Figure III-ST-STB-1).

Each Thickened Sludge Pump is a centrifugal solids handling type pump driven through a variable frequency drive by a 30 hp motor. Each thickened sludge pump has a rated capacity of 715 gpm at a total head of 63 feet at a pump speed of 1175 rpm.

Each digested sludge pump is provided with START-STOP push buttons, pump speed control, a pump speed/flowmeter, a MANUAL-OFF-AUTO selector switch and operational indicating lights on the ST-PECP-MCC-55.

(2) NORMAL OPERATION

Under normal operation, one Thickened Sludge Pump in each sludge pumping station is required to be in service. The other pump is provided as a standby unit. The pump in service delivers sludge to the Mixed Sludge Pumping Station.

Under normal operation, when the MANUAL-OFF-AUTO selector switches for each pump is in the AUTO position and the pumping rate is set at the Thickening Building Control Panel, the pump automatically changes speeds to match the desired flow rate.

(3) START-UP AND SHUT-DOWN PROCEDURES

To start up and shut down the thickened sludge pumping equipment, use the following procedures:

a. START-UP

- Make sure the effluent water system is operating and open the manual valves required to supply effluent water to the diaphragm seals for the pump discharge switches
- Refer to Figure III-ST-STB-1 and open the manually operated valves required to accommodate the desired flow path
- Close the circuit breaker for the thickened sludge pump on Motor Control Center MCC-55
- Set the desired pumping rate on the associated flow indicating controller
- Place the MANUAL-OFF-AUTO selector switch on the adjustable frequency drives in the AUTO position

b. SHUTDOWN

- Place the MANUAL-OFF-AUTO selector switch on the variable frequency drive in the OFF position and close the manually operated suction and discharge valves for the pump to be shut down

(4) MONITORS AND ALARMS

Each thickened sludge pump is provided with audible and visual alarms for high discharge pressure, lube oil failure, fail to start and lockout relay trip alarms on the annunciator panel on Motor Control Center MCC-53.

The remote transmission unit continuously scans and transmits the condition of all alarm points to the SCADA System. All alarms are received and displayed as described hereinbefore under the "Monitors and Alarms" paragraph of the subsection headed "Thickened Tank Collectors".

Each thickened sludge pump is provided with operational indicating lights and pump speed/flow indication on the adjustable frequency drives.

Each thickened sludge pump is provided with a suction and a discharge pressure gauge.

Each thickened sludge pump is provided with an elapsed time meter, a running indicating light and a coupling field ammeter on its associated motor control center cubicle.

J. RATE CONTROLLER EQUIPMENT

(1) DESCRIPTION

The rate controller equipment is provided to automatically control the flow rate of dilution water to the thickening tank mixing chambers.

The rate controller equipment consists of two venturi meters with integral motor operated Butterfly Valves, designated MRC-16 and 17 (see Figure III-ST-STB-1), and associated flow transmitters, motor valve operators and operator controllers, and instrumentation on the Sludge Thickening and Pumping Equipment Control Panel MCC-55 (ST-PECP-MCC-55).

Each meter is a modified type, cast-iron, 8-inch venturi tube with an 8-inch integrally mounted, modulating electric motor operated, butterfly valves with a flow range of 80 to 800 gpm.

(2) NORMAL OPERATION

Under normal operation, Rate Controllers MRC-16 and MRC-17 are controlled from Flow Indicating Controllers GS-3 and GS-4, respectively, located on the ST-PECP-MCC-55 (see Figure III-ST-STB-4). The manual set point stations are calibrated from 0 to 800 gpm. The output of the local controller is to the motor operated butterfly valve, which moves to regulate the flow rate as set on the ST-PECP-MCC-55.

(3) START-UP AND SHUT-DOWN PROCEDURES

To start up and shut down the rate controller equipment, use the following procedures:

a. START-UP

- Open the manually operated valves located upstream of the rate controller (see Figure III-ST-STB-1)
- Place the CLOSE-AUTO-MANUAL selector switch on the local controller in the AUTO position
- Set the desired dilution water flow rate for Rate Controller MRC-16 or MRC-17 on GS-3 or GS-4 on the ST-PECP-MCC-55. Typically 140 gpm is selected as the dilution water rate for one tank

b. SHUT-DOWN

- Place the CLOSE-AUTO-MANUAL selector switch on the local controller in the CLOSE position

(4) ALTERNATE OPERATION

Each rate controller can be manually operated from the controller mounted near each unit. Behind the cover of each controller is a CLOSE-AUTO-MANUAL selector switch and a set point station calibrated from 0 to 800 gpm. To operate the rate controller equipment manually, move the selector switch to the MANUAL position and set the desired flow on the set point station.

(5) MONITORS

Rate Controllers MRC-16 and MRC-17 are provided with flow indicating transmitters at the rate controllers. Thickening tank dilution water flow rates are relayed to Flow Indicating Controllers GS-3 and GS-4 on the Sludge Thickening Control Panel. In addition, the thickening tank dilution water flow rates are relayed to Indicators GM-1 and GM-2 on Motor Control Center MCC-59 in Filter Building No. 1. Indicators GF-22 and GF-23 on the Filter Building Panel - Miscellaneous Section in Filter Building No. 1 and Indicators G-109 and G-110 on the Process Monitoring and Terminal Cabinet Addition in the Main Pumping Station. Thickening tank dilution water flow rates are also be relayed to the SCADA System.

K. VENTURI METER EQUIPMENT: MS-6

(1) DESCRIPTION

The venturi meter equipment MS-6 is provided to measure and indicate anaerobic digesters supernatant flow to the sludge distribution chamber, but is no longer in service.

L. MAGNETIC FLOW METERS: MS-8 AND MS-9

The Magnetic Flowmeters MS-8 and MS-9 (see Figure III-ST-STB-1) are provided to measure the flow rate of carbonaceous and nitrification waste secondary sludge pumped to the Thickening Tank Mixing Chambers. Refer to the subsection headed "Flow Control" for alternate flow paths.

Meters MS-8 and MS-9 are 4-inch magnetic flowmeters with a flow range of 50 to 500 gpm.

Each meter is provided with a flow signal converter and flow indicator at the unit. The waste carbonaceous and nitrification stage sludge flow rates (through Meters MS-8 and MS-9, respectively), are relayed to Indicator-Recorders G-140 and G-142 on the meter panel in the Main Pumping Station.

M. MAGNETIC FLOW METERS: FE-7, FE-8, and FE-9

Magnetic flow meter FE-7 is provided to measure flow to the FBS Thickening Building (formerly Dissolved Air Flotation Building). Sludge is no longer sent to this facility, thus this meter is no longer in service (See Figure III-ST-STB-I).

Magnetic flow meter FE-8 is provided to measure flow to the Thickening Tanks when flow is directed through this pipeline (See Figure III-ST-STB-1).

Magnetic flow meter FE-9 is provided to measure the flow of waste activated sludge going to the Belt Thickener Building (See Figure III-ST-STB-1). The flow signal can be read locally near the meter at flow indicating transmitter FIT-9 and remotely at flow indicating recorder FIR-9 at the BTB Control Panel at the Belt Thickener Building.

N. POLYMER STORAGE AND HANDLING EQUIPMENT

(1) DESCRIPTION

The Polymer Storage and Handling Equipment located in the Sludge Treatment Building consists of the following:

- Six Liquid Polymer Feed Units, designated ST-PFU-1, 2, 3, 4, 5 and 6;
- Two Liquid Polymer Storage Tanks, designated ST-LPST-1 and 2;
- A Liquid Polymer Transfer Pump, designated ST-PTP-1; and
- Polymer Solution Distribution Piping and Equipment

This equipment is provided to prepare liquid polymer solutions from neat liquid polymer for sludge conditioning to the Thickening Tanks and is described below (see Figure III-ST-STB-2).

a. LIQUID POLYMER FEED UNITS: ST-PFU-1, 2, 3, 4, 5 AND 6

Six Liquid Polymer Feed Units have been provided to feed polymer for sludge conditioning to the Thickening Tanks. Each unit automatically and continuously prepare solution from neat liquid polymer and pumps it to process application points.

Each unit consist of a polymer metering pump, dilution water solenoid valve, primary and post dilution water solenoid valve, primary and post dilution water rotometers, mixing chamber, post dilution water static in-line mixer, transparent suction tubing, and valves.

b. LIQUID POLYMER STORAGE TANKS: ST-LPST-1 AND 2

The Liquid Polymer Storage Tanks have a nominal capacity of 1,350 gallons each and are constructed of translucent fiberglass reinforced plastic to allow visual observation of the liquid polymer level.

Each tank is provided with one 22-inch flanged manway, flanged 8-inch diameter level sensor access, vent, overflow connection, flanged inlet at top with full size antisiphon internal drop pipe, and flanged bottom outlet.

c. LIQUID POLYMER TRANSFER PUMP: ST-PTP-1

The polymer transfer equipment is provided to pump liquid polymer from either Polymer Storage Tank ST-LPST-1 or 2 back into the same tank to provide mixing or to the other tank for transfer.

The polymer transfer pump is of the positive displacement, non-clogging progressive cavity type, driven by a 3 hp electric gear motor, directly connected to the pump. The pump has a nominal rated capacity of 10 gpm at a rated head of 140 feet at a pump speed of 350 rpm.

(2) NORMAL OPERATION

Under normal operation, neat polymer is diluted and transferred to the selected point of application by the polymer feed units selected for operation.

Once desired polymer concentration has been determined, proper polymer dilution can be achieved by controlling input rate of the polymer and the dilution water.

Dilution water flow rate is controlled by using the metering valve located on the rotameter. Maximum rotameter capacity is 8 gallons per minute. Dilution water flow can be adjusted from 0 to 100 percent of the total flow. To prevent incomplete mixing of the polymer, never operate below 10 percent of the total flow.

Neat polymer input rate is controlled by varying the speed of the metering pump. Polymer Feed Units ST-PFU-1, 2 and 3 can pump a maximum of 4.5 gallons of neat polymer per hour. Polymer Feed Units, ST-PF-4, 5 and 6, can pump a maximum of 8 gallons of neat polymer per hour. Neat polymer input rate is a function of stroke, frequency and maximum metering pump capacity.

$$\frac{S}{100} \times \frac{f}{100} \times Q_m = Q_p$$

Where:

S = stroke;
f = frequency;
Q_m = maximum pump capacity; and
Q_p= polymer input rate.

Control devices provided for operation of polymer storage and handling equipment in the Sludge Treatment Building are as follows:

- STROKE FREQUENCY CONTROL KNOB (located on the polymer feed units metering pump): Turning this knob clockwise increases pumping frequency. The knob is graduated in percent of maximum strokes per minute.
- STROKE LENGTH CONTROL KNOB (located on the polymer feed units metering pump): Turning this knob clockwise increases stroke length. The knob is graduated in percent of maximum stroke length.
- MODE SELECTOR SWITCH (located on the polymer feed units metering pump): Switch to "internal" for independent operation. Switch to "external" when metering pump is externally paced. For polymer feed unit operation, this switch should remain in the "internal" mode.
- SYSTEM POWER PUSH BUTTON (located on polymer feed units): Depressing this push button flushes the polymer feed unit with plant water.
- ROTAMETER METERING VALVE (located on polymer feed units): This valve is opened and closed to control polymer dilution water flow rate.

(3) START-UP AND SHUTDOWN PROCEDURES

To start-up and shut down the Polymer Storage and Handling Equipment, use the following procedures:

a. START-UP

- Open valving on polymer and plant water supply lines for appropriate polymer storage tank and polymer feed units. Close valves on polymer transfer lines
- Energize selected polymer feed units
- To achieve desired polymer dilution, adjust polymer dilution water flow rate and neat polymer input rate using the Rotameter Metering Valve, Stroke Frequency Control Knob, and Stroke Length Control Knob

b. SHUTDOWN

- Close valving on polymer supply lines
- Flush the polymer feed unit(s) for at least 30 minutes by depressing the "Flush" push button
- Close valving on plant water supply lines

- Open valving on polymer transfer lines for either polymer mixing or transfer and start polymer transfer pump

(4) MONITORS AND ALARMS

Each Polymer Feed Unit is provided with the following meters and indicating lights:

- Primary and Post Dilution Rotameters (1-8 gpm),
- Low Water Pressure Indicating Light,
- Low Polymer Indicating Light, and
- Internal and External Stroke Frequency Pilot Lights.

The condition of all alarm points are transmitted to the Remote Transmission Units in the Sludge Treatment where they can be accessed through the SCADA System.

O. POLYMER SOLUTION WATER EQUIPMENT

(1) DESCRIPTION

The Polymer Solution Water Equipment includes two duplex booster pumps, one 300 gallon break tank, once control panel and appurtenant piping, valves and switches. This equipment is designed to provide 100 gpm of plant water at between 40 and 60 psig without excessive pump cycling. Each booster pump has a rated nominal capacity of 100 gpm at a rated head of 150 feet at 3,500 rpm.

(2) NORMAL OPERATION

Under normal operation, the selected duty pump automatically starts when any of the polymer feed units is energized and stops when polymer stops being pumped. The duty pump is selected to run at the control panel. Should the selected duty pump shut down or fail for any reason while polymer is being pump, the lag pump automatically starts. Should pressure in the pump discharge line exceed 60 psi, a pressure relief valve opens a bypass line which discharge into the break tank.

The break tank is equipped with a float valve which controls City water supplied to the tank, a float control switch which activates the low level indicating light on the control panel, and a low level shut-off switch.

The following control devices are provided for operation of the Polymer Solution Water Equipment:

- DUTY PUMP SELECTOR SWITCH (located on the Plant Water Control Panel): Select either booster pump No. 1 or 2 for duty pump operation.
- HAND-OFF-AUTO SELECTOR SWITCH (located on the Plant Water Control Panel): When in the AUTO position, pump operation is automatically controlled based on operating signals from the polymer feed units. When in the HAND position, the pump is operated manually at the pump. Pump will not operate in the OFF position.
- POWER DISCONNECT SWITCH (located inside the Plant Water Control Panel): Opening this switch disconnects power from the booster pump units.

(3) START-UP SHUTDOWN

To start-up and shutdown the Polymer Solution Water Equipment, use the following procedures:

a. START-UP

- Make sure power disconnect switch is closed at the Plant Water Control Panel
- Open 3-inch City water supply valve and fill the break tank
- Open booster pump and selected polymer feed unit isolation valves
- Select duty pump and automatic operation at the Plant Water Control Panel

b. SHUTDOWN

- Place the HAND-OFF-AUTO Selector Switch in the OFF position
- Close polymer feed unit isolation valve

NOTE

Open the power disconnect switch if maintenance is to be performed on the pumping equipment. Follow approved **Lockout/Tagout** procedures (See Chapter VI, Safety).

(4) ALTERNATE OPERATION

Booster pumps may be manually operated at the pumps when the HAND-OFF-AUTO Selector Switch is in the HAND position.

(5) MONITORS AND ALARMS

The Plant Water Control Panel is equipped with a low level warning light to indicate low water level in the break tank. In addition, two elapsed time meters and two run pilot lights (one for each pump unit) are mounted on the control panel door.

The condition of all alarm points are transmited to the Remote Transmission Units in the Sludge Treatment where they can be accessed through the SCADA System.

P. WASTE SLUDGE PUMPS: ST-WSP-1 AND 2

(1) DESCRIPTION

The Waste Sludge Pumps are provided to pump sludge collected in Final Sedimentation Tanks No. 13-20 to the sludge thickening facilities. Sludge is withdrawn from the return sludge pipeline located on the west side of the Diffused Air Reactors.

The waste sludge pumping equipment located in the Sludge Treatment Building consists of two waste sludge pumps, designated ST-WSP-1 and 2, and associated adjustable frequency drives, drive motors, and controls.

The Waste Sludge Pumps are single stage, horizontal shaft, nonclog, side discharge, centrifugal, mixed flow type, each driven through adjustable frequency drives by 40 hp totally enclosed fan cooled motors.

Each Waste Sludge Pump has a rated capacity of 700 gpm at a rated head of 100 feet and at a pump speed of approximately 1185 rpm. Refer to Figure III-ST-STB-3 to see the pumping and system curves.

The Waste Sludge Pumps are operated and controlled from the Waste Sludge Pump Control Panel (WSPCP) located in the Sludge Treatment Building and the Blower Building Control Panel (BBCP) located in the Blower Building. The WSPCP consists of local controls and the adjustable frequency drive control panels for the pumping units.

A pneumatically-operated plug check valve is located in the discharge line of each Waste Sludge Pump and opens automatically when the pump discharge pressure exceeds a preset value above the downstream system pressure (for a detailed description of operation of pneumatically-operated plug check valves, refer to Section III-SU-VAL - VALVES).

NOTE

Since the return sludge pipelines are always under pressure, the Waste Sludge Pump suction pipelines will also be under pressure.

Based on routine tests of MLSS concentrations, a desired or target waste sludge flow rate will be determined (see the section headed "Diffused Air Reactors"). The appropriate pump to service the sludge pumping operations will be selected via the Waste Sludge Pump interlock controls located at the WSPCP. The desired flow rate of waste sludge will be selected at flow indicating controller, FIC-310, located at the BBCP in the Blower Building. This target waste sludge flow rate will ultimately cause the selected pump to speed up or slow down based on the relation of the measured flow value from meter FE-310 (see Figure III-ST-STB-1) to that of the target flow value.

Each Waste Sludge Pump is provided with a TEST push-button and an ON/OFF selector switch at each unit. Each pump is provided with START, STOP, EMERGENCY STOP and RESET push buttons and a HAND/OFF/AUTO selector switch on the WSPCP. A ST-WSP-1/ST-WSP-2/WSV-1 and WSPCP/OFF/BBCP selector switch, and two adjustable frequency drive control keypads are also provided at the WSPCP. The HAND/OFF/AUTO selector switch determines where the pumps are started and stopped, the ST-WSP-1/ST-WSP-2/WSV-1 selector switch determines which pump is to be operated and WSPCP/OFF/BBCP selector switch determines the location of pump speed control Controls at the BBCP include a flow totalizer, flow indicator, flow indicating controller, speed indicator, ON/OFF selector switch, a horizontal bar graph position indicator and operating indicating lights.

(2) NORMAL OPERATION

A single pump will normally be in operation, with the other pump serving as a standby unit. The pumps will normally be operated from the BBCP. During normal operation, the HAND/OFF/AUTO selector switch will be in the AUTO position and the pumps will be started and stopped from the BBCP, the ST-WSP-I/ST-WSP-2/WSV-1 will be in the ST-WSP-I or ST-WSP-2 position, and the WSPCP/OFF/BBCP

selector switch will be in the BBCP position to allow speed control at the BBCP. The ON/OFF selector switch at the BBCP will normally be in the ON position.

(3) START-UP AND SHUTDOWN PROCEDURES

To start up and shutdown the waste sludge pumping equipment, use the following procedures:

a. Start-up

- Check that the plant air system is operating and open the valves required to supply air to the pneumatically-operated pump discharge plug check valves
- Check that the effluent water system is operating and open the valves required to supply seal water to the pumps and purge water to the pump discharge pressure switch diaphragm seals
- Open manually operated suction for the pump to be started (Figure III-ST-STB-1). Make sure that the manually operated isolating valves in the suction and discharge headers are properly positioned in order to route the waste sludge flow through the desired pipelines and instrumentation
- Place the ON/OFF selector switch at the pump in the ON position
- Check that the appropriate circuit breakers in the WSPCP are closed so that the selected pump can be energized
- Place the ST-WSP-1/ST-WSP-2/WSV-1 selector switch in the ST-WSP-1 or ST-WSP-2 position for the desired pump
- Place the WSPCP/OFF/BBCP selector switch at the WSPCP in the BBCP position allowing pump speed control to take place via the flow indicating controller, FIC-310, at the BBCP
- Place the HAND/OFF/AUTO switch at the WSPCP in the AUTO position
- Place the ON/OFF selector switch at the BBCP in the ON position
- Set the target waste sludge flow rate with the flow indicating controller, FIC-310, at the BBCP

b. Normal Shutdown

- Place the ON/OFF selector switch at the BBCP in the OFF position
- Or, place HAND/OFF/AUTO selector switch at the WSPCP in the OFF position

NOTE

Under normal shut down, the pump will continue to operate after the OFF position is selected until the pneumatically-operated discharge plug check valve is completely closed through the normal closure sequence as described in Section III-SU-VAL, headed "Valves".

If maintenance is to be performed on a pump, and pumping of waste sludge with the other pump is desired, place the ON/OFF selector switch at the pump to be serviced in the OFF position, and engage the associated locking device. Next, open the associated circuit breaker for the pump at the WSPCP, engage

the locking device for the appropriate circuit breaker to the pump under maintenance. Follow approved **Lockout/Tagout** procedures (See Chapter VI, Safety).

c. Emergency Shutdown

- Depress the EMERGENCY STOP push button at the WSPCP for the pump to be stopped

NOTE

Under emergency shut down, the pump will stop immediately and the pneumatically-operated discharge plug check valve will close rapidly through the emergency closure sequence as described in Section III-SU-VAL, headed "Valves".

(4) ALTERNATE OPERATION

Alternate operation of the Waste Sludge Pumps is as follows:

a. Alternate Operation A

Speed control of the Waste Sludge Pumps can be accomplished manually from the WSPCP instead of automatically from the BBCP as described under the above Normal Operation section for these pumps. The WSPCP is equipped with an adjustable frequency drive control keypad for speed control.

1. Start-up Alternate A

To operate a waste sludge pump in the Alternate Operation A configuration, start up will essentially be the same as outlined for Normal Operation with the following exceptions:

- Place the WSPCP/OFF/BBCP selector switch at the WSPCP in the WSPCP position allowing pump speed control to take place via adjustable frequency drive control keypad
- Place the HAND/OFF/AUTO switch at the WSPCP in the HAND position
- Depress the START push button at the WSPCP
- Adjust the pump speed via adjustable frequency drive control keypad at the WSPCP

2. Normal Shutdown Alternate A

- Place HAND/OFF/AUTO selector switch at the WSPCP in the OFF position

3. Emergency Shutdown

- Depress the EMERGENCY STOP push button at the WSPCP for the pump to be stopped

b. Alternate Operation B

Since waste sludge is drawn directly off a pressurized return sludge pipeline, a certain amount of sludge can be wasted without the need for pumping. In this alternate operating mode, the return sludge pumps provide the necessary energy to transport waste sludge to the sludge thickening facilities or to the effluent channel of Primary Sedimentation Tank Nos. 5 - 8. Control of the waste sludge flow rate for Alternate Operation B is by the same Flow Indicating Controller (FIC-310) at the BBCP that was described in the Normal Operation section. Under Alternate Operation B, however, the relation of the measured flow from Flow Meter, FE-310, to the appropriate flow indicating controller, FIC-310, target value, causes the modulation of the Flow Control Valve (WSV-1) directly downstream of flow meter.

This mode of operation is appropriate until the waste sludge flow rate desired is above that obtainable by the pressure head in the return sludge pipelines alone. When the flow indicator on the BBCP indicates that the flow indicating controller is not able to waste an adequate amount of waste sludge to the sludge treatment facilities or the effluent channel of Primary Sedimentation Tanks No. 5 - 8 (i.e. horizontal bar graph position indicator on BBCP indicates valve WSV-1 is fully open), one of the Waste Sludge Pumps must be started.

1. Start-up Alternate B
   - Make sure that the manually operated isolating valves in the suction and discharge headers are properly positioned in order to route the waste sludge flow through the desired pipelines and instrumentation.

NOTE

It is not necessary to isolate the Waste Sludge Pumps for this mode of operation since each are equipped with automatic control plug check valves that are closed when the pump is off. However, isolation is recommended if the pumps will not be used for a period of time.

   - Check that the appropriate circuit breaker for WSV-1 at MCC-51 in the Sludge Treatment Building is closed so that the valve can be energized
   - Place the BBCP/UNIT selector switch at WSV-1 in the BBCP position
   - Place the WSPCP/OFF/BBCP selector switch at the WSPCP in the BBCP position allowing valve modulation control to take place via the flow indicating controller, FIC-310, at the BBCP
   - Place the ON/OFF selector switch at the BBCP in the ON position
   - Place the ST-WSP-1/ST-WSP-2/WSV-1 selector switch at the WSPCP in the WSV-1 position

- Set the target waste sludge flow rate with the flow indicating controller, FIC-310, at the BBCP

(5) MONITORS AND ALARMS

Each Waste Sludge Pump is provided with RUN and OFF status indicating lights at the BBCP.

Various status indication signals for each Waste Sludge Pump are also available for monitoring via the SCADA system. These monitoring signals include pump running status and PUMP FAIL indication. The monitoring signals are fed to the Remote Transmission Unit (RTU) where they can be accessed through the SCADA system.

Each Waste Sludge Pump is provided with a "Lock Out Relay" which will automatically shutdown the associated waste sludge pump due to:

- AFD Failure Relay
- Seal water Failure Relay

The Waste Sludge Pumps will be shutdown when the "Lock Out Relay" is tripped according to the procedure described above for "Emergency Shutdown"

The contact provided to initiate lock out sequence due to low seal water pressure is a pressure switch. The circuit includes a time delay relay to permit time for the seal water solenoid valve to open on start-up and to prevent nuisance pump shutdown because of momentary fluctuations in seal water pressure.

Q. DEWATERING PUMP: ST-DP-1 AND 2

The dewatering pump are single-stage, horizontal, non-clogging, end suction, vertical discharge, centrifugal, vortex type solids handling pumps, each driven by a 30 hp motor. The dewatering pump has a rated capacity of 600 gpm at a rated head of 92 feet at a pump speed of 1750 rpm. These pumps are no longer in service.

R. SUMP PUMPS: ST-STP-1, 2 AND 3

(1) DESCRIPTION

The sump pumping equipment in the Sludge Treatment Building consists of three Sump Pumps and Associated Drive Motors, designated ST-SP-1, 2 and 3, and associated control panels, cover plates and frames and sump level controls. This equipment is provided to automatically pump the liquid which flows to the associated sumps from floor and equipment drains into the sewage treatment process.

The sump pumping equipment is located in the lower level of the Sludge Treatment Building.

The sump pumps are single stage, vertical, non-clogging, screenless, bottom suction, side discharge, centrifugal type solids handling wet pit pumps driven by constant speed motors. Each pump is provided with a liquid level control (to automatically start and stop the pump), high water level alarm and a control panel.

Sump Pumps ST-SP-1, ST-SP-2 and ST-SP-3 have a rated capacity of 150 gpm at a rated head of 33.5 feet, 32.5 feet and 34 feet, respectively.

(2) NORMAL OPERATION

Each sump pump is provided with a HAND-OFF-AUTO selector switch located on its associated sump pump control panel near the unit. Under normal operation, when the HAND-OFF-AUTO selector switch for each sump pump is in the AUTO position, each sump pump will start and stop automatically in response to changes in the sump liquid level.

(3) START-UP AND SHUTDOWN PROCEDURES

To start and shut down the sump pumps, use the following procedures:

a. START-UP

- Make sure the effluent water system is operating and open the valves required to supply lubrication to the pump
- Open the manually operated valve in the discharge line of each pump
- Place the HAND-OFF-AUTO selector switch for each pump in the AUTO position
- Close the breaker handle on the associated sump pump control panel for each pump
- Close the circuit breaker on the associated motor control centers for each sump pump

b. SHUTDOWN

- Place the associated HAND-OFF-AUTO selector switch in the OFF position

NOTE

If maintenance is to be performed on a pump, open the circuit breaker on the associated motor control center for the sump pump and open the breaker handle for the pump on its control panel. Follow approved **Lockout/Tagout** procedures (See Chapter VI, Safety).

(4) ALTERNATE OPERATION

Each sump pump may be operated manually when the HAND-OFF-AUTO selector switch is the HAND position. When the HAND-OFF-AUTO selector switch is in the HAND position, the pump will run continuously.

(5) MONITORS AND ALARMS

Audible and visual alarms are provided for each sump pump at the associated annunciator panel, for low lube water level. An audible and visual alarm is provided for each sample sump pump at its associated annunciator panel for high water level. The alarm will be also relayed by the SCADA system.

Each pump is provided with an operational indicating light on its motor control center and a discharge pressure gauge calibrated in feet of water. The sump pumps are also provided with an elapsed time meter.

S. HOISTING EQUIPMENT: ST-MH-1

(1) DESCRIPTION

The hoisting equipment in the Sludge Treatment Building consists of a Monorail Hoist, designated ST-MH-1. This equipment is located at the north end of the Sludge Treatment Building and is provided for the installation and removal of equipment and other objects located in the basement of the building.

The monorail hoist consists of a one 3-ton capacity monorail trolley, an electric operated trolley and hoist motor, and a pendant control station suspended from the hoist. The trolley and hoist motors are equipped with multiple disc brakes which engage for positive stopping when the motors are de-energized.

Refer to the Contractor's O & M Manuals for Manufacturer's Service Manuals pertaining the equipment.

(2) NORMAL OPERATION

The monorail trolley is provided with a pendant control station with push buttons which control operation of the trolley and hoist motors. The pendant control station is provided with FORWARD-REVERSE push buttons to operate the trolley motor and UP-DOWN push buttons to operate the hoist motor.

T. PLANT AIR (SEE FIGURE III-SU-UPS-1 THROUGH 3)

The plant air equipment in the Sludge Thickening Building consists of piping and fittings, shut-off valves, hose connections, various solenoid valves, and moisture traps.

Compressed air is supplied to the Sludge Treatment Building by the plant air system as described in Section III-OB-MPS, headed "Main Pumping Station".

The plant air equipment supplies compressed air to the pneumatically operated valves and to hose connections.

U. EFFLUENT WATER (SEE FIGURE III-SU-UPS-5 THROUGH 9)

The effluent water equipment in the Sludge Treatment Building consists of piping and fittings, shut-off valves and solenoid valves.

Effluent water is supplied to the Sludge Treatment Building by the General Purpose Effluent Water Pumps as described in Section III-FL-FB, headed "Filter Building No. 1 and 2 and Junction Chamber No. 6".

The effluent water is used for pump seal and lubrication water, purge water, and polymer.

V. PLANT WATER (SEE FIGURE III-SU-UPS-4)

The plant water equipment in the Sludge Treatment Building consists of piping and fittings, hose hydrants, and a pressure gauge.

Plant water is supplied to the Sludge Treatment Building by the Plant Water Equipment as described in Section III-OB-MPS, headed "Main Pumping Station". The plant water is used for hosing down floors, tanks, and equipment.

W. SAMPLE SINKS

(1) DESCRIPTION

Sample sinks are provided to allow convenient grab sampling of sludge. Each sampling location consists of a sample sink, individual sample lines from various pipelines and a plant water supply for back flushing and clean-up.

(2) NORMAL OPERATION

The normal procedure for obtaining a grab sample of sludge is as follows:

- Open the ball valves on the 1-1/2-inch sample line, both at the selected pipeline and at the sample sink
- Open the rapid action globe valve at the sample sink and allow sludge to flow for at least 30 seconds before a sample is taken
- After the sample is obtained, open the ball valve on the 1-1/2-inch plant water line and back flush the sample line for at least 30 seconds. Close the ball valves on the sample line and the plant water line
- Wash down the sample sink with the 3/4-inch plant water line

X. VENTILATION: ST-S-1 AND 2

(1) DESCRIPTION

The ventilation system is provided to supply 100 percent outside air to the Thickening Tanks Gallery and Pumping Stations and to the Sludge Treatment Building Electric Room.

The ventilation system in the Sludge Treatment Building consists of Supply Fans, designated ST-S-1 and 2, a thermostat, inlet and exhaust louvers with manual dampers and associated ductwork.

Supply Fans ST-S-1 and 2 are in-line centrifugal fans driven by single speed motors. Fan ST-S-1 supplies 11,000 cubic feet per minute of outside air to the Thickening Tanks Gallery and Pumping Stations and is driven by a 5-horsepower single speed motor. Fan ST-S-2 supplies 7,000 cubic feet per minute of outside air to the Electrical Room in the Sludge Treatment Building and is driven by a 3-horsepower single speed motor.

(2) NORMAL OPERATION

Supply Fan ST-S-1 is provided with an ON-OFF switch at the unit with a locking device for the OFF position and START-STOP push buttons located on Motor Control Center MCC-54. The fan may be operated continuously or intermittently, as required.

Supply Fan ST-S-2 is provided with an ON-OFF switch at the unit with a locking device for the OFF position, a HAND-OFF selector switch on Motor Control Center MCC-54 and a thermostat control in the Electrical Room. Under normal operation, when the selector switch is in the AUTO position, the fan will automatically start and stop as required to maintain the thermostat set point temperature.

(3) START-UP AND SHUT-DOWN PROCEDURES

To start up and shut down the ventilation equipment, use the following procedures:

a. START-UP

1. Supply Fan ST-S-1
   - Open the manual dampers on the intake and exhaust louvers
   - Move the ON-OFF switch at the unit to the ON position
   - Close the circuit breaker on Motor Control Center MCC-54
   - Push the START button on MCC-54

2. Supply Fan ST-S-2
   - Open the manual dampers on the intake louver
   - Move the ON-OFF switch at the unit to the ON position
   - Close the circuit breaker on Motor Control Center MCC-54
   - Move the HAND-OFF-AUTO selector switch on MCC-54 to the AUTO position
   - Set the thermostat in the Electrical Room at the desired temperature control set point

b. SHUT-DOWN

1. Supply Fan ST-S-1
   - Push STOP button on Motor Control Center MCC-54

2. Supply Fan ST-S-2
   - Move the HAND-OFF-AUTO selector switch on Motor Control Center MCC-54 to the OFF position

NOTE

If maintenance is to be performed on a unit, move the ON-OFF switch at the unit to the OFF position and engage the locking device and open the circuit breaker on MCC-54. Follow approved **Lockout/Tagout** procedures (See Chapter VI, Safety).

(4) MONITORS

Supply Fans ST-S-1 and 2 are provided with red running indicator lights on Motor Control Center MCC-54.

Y. POWER DISTRIBUTION SYSTEM

The power distribution system is shown in detail on the contract plants and various shop drawings. Refer to Table III-ST-STB-1, Sludge Treatment Building and Thickening Tanks - Facility Equipment Summary for contract plan and shop drawing numbers which pertain to the power distribution system.

III-ST-BTB - BELT THICKENER BUILDING

A. GENERAL

The Belt Thickener Building contains the following equipment and systems:

- Sludge Storage Tanks
- Sludge Grinder Equipment
- Sludge Feed Pumping Equipment
- Belt Thickener Equipment
- Liquid Polymer Storage, Handling and Feed Equipment
- Thickened Sludge Pumping Equipment
- Effluent Water Booster Pumps
- Hoisting Equipment
- Ventilating and Air Conditioning Equipment
- Sludge Feed and Thickened Sludge Flow Meters
- Washwater Flow Meter
- Plant Water
- Effluent Water
- Plant Air
- Power Distribution System

The available facilities for thickening waste activated sludge (WAS) at Howard F. Curren Advanced Wastewater Treatment Plant includes gravity thickeners, dissolved air flotation thickeners and the belt thickeners. The flow splitting between these facilities, as diagramed on Figure III-ST-BTB-1, can be maintained either by gravity or by rate control. These can be monitored and controlled at the Belt Thickener Building Control Panel (BTBCP). The meters and rate controlling valves used to distribute the sludge between the three facilities are located in the Sludge Treatment Building. Flowmeters FE-7 (MRC-21), 8 (MRC-22) and 9 monitor the flow to the Gravity Thickening Tanks, Dissolved Air Flotation Building (DAF) and the Belt Thickener Building (BTB), respectively. Sludge flow rates can be regulated to the Gravity Thickening Tanks and Dissolved Air Flotation Building by means of rate controllers MRC-21 and MRC-22. The metering and control of the waste activated sludge sent to thickening is diagramed on Figure III-ST-BTB-2. The options available for splitting the flow is described in the five cases listed as follows:

(1) <u>CASE 1 - BELT THICKENERS ONLY</u>

- Route all WAS flow to BTB storage tanks

(2) <u>CASE 2 - GRAVITY THICKENERS AND BELT THICKENERS</u>

- Control flow to Gravity Thickeners; remaining flow to BTB storage tanks
- alve flow directly into BTB sludge feed pumps (bypass storage); remaining flow to Gravity Thickeners
- ypass controllers and allow hydraulic split to Gravity Thickeners and BTB storage tanks

(3) CASE 3 - DAF THICKENERS AND BELT THICKENERS

- Same as Case 2 (replace Gravity Thickeners with DAF Thickeners

(4) CASE 4 - GRAVITY THICKENERS, DAF THICKENERS AND BELT THICKENERS

- Control flow into Gravity and DAF Thickeners; remaining flow to BTB storage tanks
- Control flow to DAF Thickeners and Valve flow directly into BTB sludge feed pumps; remaining flow to Gravity Thickeners

(5) CASE 5 - GRAVITY THICKENERS AND DAF THICKENERS

- Control flow to DAF Thickeners; remaining flow to Gravity Thickeners
- Control flow to Gravity Thickeners; remaining flow to DAF Thickeners

The Belt Thickener Building is a totally enclosed single level structure with adjacent sludge storage tanks. Waste activated sludge is piped to the Belt Thickener Building and may be stored or directly repumped to the Belt Thickeners. After thickening, the thickened sludge is pumped to the Mixed Sludge Pumping Station for treatment in the Anaerobic Digestion Facilities.

For a schematic diagram of the major items of equipment in the Belt Thickener Building, see Figures III-ST-BTB-3 and 4.

Refer to Table III-ST-BTB-1, Belt Thickener Building - Facility Equipment Summary for control numbers, manufacturers, equipment capacities, and operation, maintenance and contract plan, and shop drawing references. Refer to the Division 5H2A Contractor's O&M Manual for Manufacturer's Service Manuals pertaining to the equipment in the Belt Thickener Building.

B. BELT THICKENER PROCESS

(1) THICKENING

The belt thickener equipment employs gravity drainage to thicken sludge. Prior to gravity thickening, sludge is conditioned by mixing with polymer in an in-line conditioning mixer. After mixing, the conditioned sludge discharges into a reaction chamber before entering the gravity zone. Each belt thickener contains belt wash stations for cleaning the belt. Doctor blades separate the sludge from the belt at the point of discharge. Drainage pans and associated drainage piping capture and convey water from the gravity and belt wash zones.

(2) PROCESS VARIABLES

The type of sludge to be dewatered will affect several variables in the belt thickening process. The variables include the amount of polymer to be used, the feed rate of sludge to the belt thickener, the belt travel speed and the adjustable ramp setting. The types of sludges to be thickened at Tampa are carbonaceous waste activated sludge, nitrified waste activated sludge, or mixtures thereof. As a rule of thumb for thickening difficulty, carbonaceous waste activated sludge is the easiest, nitrified waste activated sludge is the hardest, and mixtures thereof fall in between in the degree of difficulty. Generally, carbonaceous sludge only will be thickened.

The amount of polymer applied will be determined through experience depending on the types of sludge to be thickened or the blend of sludge to be thickened.

The sludge feed rate, in terms of the pounds per hour of sludge solids which may be fed to each belt thickener, is dependent upon the types of sludge as described above. Belt travel speed also may require adjustment to accommodate the particular type of sludge being thickened.

(3) PROCESS CONTROL CONSIDERATIONS

The process control considerations are as follows:

a. Desired thickened sludge solids concentration
b. Polymer dosage
c. Solids capture

The desired thickened sludge solids concentration will determine the sludge feed rate and polymer dosage rate to be applied to the belt thickener, as well as the belt travel speed. In general, higher thickened sludge solids concentration will require a lower sludge feed rate, a slower belt travel speed and a higher polymer dosages. Higher polymer dosages, of course, will increase operational costs.

The belt thickener equipment has been designed to achieve a 5 percent thickened sludge solids concentration. With a 5 percent thickened sludge solids concentration, it is anticipated that usage of American Cyanamid 1596-C polymer will be less than 13 pounds per dry ton of solids processed and that solids capture should be in excess of 96 percent.

(4) REPORTING

The operator for each area is responsible for obtaining and logging information into the plant computer logging system and on forms as required. A list of the required information to be logged is obtained by pressing the "HELP" key on the computer at the process monitoring control panel in the Main Pumping Station. Data is entered into the computer by pressing the "ENTER" key.

C. SLUDGE STORAGE TANKS

(1) DESCRIPTION

The sludge storage tanks are vertical, open top, sloped invert type tanks with a 11 foot liquid level when full. The tanks are rectangular and measure 13 foot - 6 inches by 27 foot and have a nominal capacity of approximately 29,000 gallons.

The tanks are supplied sludge as described in the subsection headed "General" and are provided with bubbler type liquid level indicators, designated LT-120 and LT-121.

(2) MONITORS AND ALARMS

Each Sludge Storage Tank is provided with a liquid level indicator and transmitter at the top of the tank. Individual alarms and status indicators are displayed on the Belt Thickener Building Control Panel located in the Control Room.

Each Sludge Storage Tank is provided with audible alarms with HIGH and LOW level alarms on the annunciator panel on the Belt Thickener Building Control Panel.

D. SLUDGE GRINDER EQUIPMENT: BTB-SG-1,2

(1) DESCRIPTION

The Sludge Grinder Equipment is provided to grind the sludge before it enters the Sludge Feed Pumping Equipment. (See Figure III-ST-BTB-3)

The sludge grinder equipment consists of two Sludge Grinders, designated BTB-SG-1 and BTB-SG-2.

Each sludge grinder is an in-line, vertical unit, motor driven through a gear reducer with two shafts. The two shafts of each grinder are fitted with intermeshing cutters, which counter- rotate to grind the sludge.

The sludge grinders have a rated capacity of 2500 gpm of combined sludges containing from 0.5 to 2.0 percent solids.

(2) NORMAL OPERATION

Under normal operation, only one sludge grinder is required to be in operation. The second grinder is provided as a standby unit.

Each sludge grinder is provided with a START, STOP, and RESET push-buttons, a LOCAL/OFF/REMOTE control switch and overload and run indicating lights, all located at the Sludge Grinder Control Panel on MCC-87. An ON/OFF selector switch with a run indicating light is provided for each sludge grinder at the Belt Thickener Building Control Panel (BTBCP). A START/STOP-LOCK OUT selector switch is located at each unit.

Under normal operation when the selector switch at the unit is in the START position and the control switch at MCC-87 is in the LOCAL position and the START push button is depressed at MCC-87 the sludge grinder will operate continuously. With the control switch in the REMOTE position and the START push button is depressed on the BTBCP, the sludge grinder will operate continuously.

(3) START-UP AND SHUTDOWN PROCEDURES

To start up and shut down the Sludge Grinder Equipment, use the following procedures:

a. START-UP

- Make sure all valves are in the proper position.
- Close the circuit breaker on MCC-87.
- Switch control at the unit to the START position.
- Make sure that control switch is in the LOCAL or REMOTE position.
- Either depress the START push buttons at the Sludge Grinder Control Panel on MCC-87 if LOCAL is selected or switch the selector to ON at the Belt Thickener Building Control Panel (BTBCP) if REMOTE is selected.

b. SHUTDOWN

- Either depress the STOP push button at the Sludge Grinder Control Panel on MCC-87 if LOCAL is selected, switch selector to OFF in the BTBCP if REMOTE is selected or switch selector to STOP at the unit.

NOTE

If maintenance is to be performed on a sludge grinder, open the circuit breaker on MCC-87, turn the selector switch to the OFF position at the appropriate Sludge Grinder and engage the locking device. Follow approved **Lockout/Tagout** procedures (See Chapter VI, Safety).

(4) ALTERNATE OPERATION

If both of the sludge grinders are not able to operate, or if they are not required, the bypass valve may be opened so waste activated sludge may bypass both grinders and flow directly to the sludge feed pumps (Refer to Figure III-ST-BTB-3).

(5) MONITORS AND ALARMS

Each Sludge Grinder Control Panel is designed to sense an overload condition and automatically respond by momentarily reversing the direction of rotation. Grinder shutdown will occur in response to the overload condition after reversing its direction three times. If a grinder shutdown occurs, the sludge feed pumps also shut down while sequencing a shutdown of all other associated equipment. An audible and visual alarm indication is provided on the annunciator at the BTBCP for Grinder Overload shutdown.

The Remote Transmission Unit in the Control Room continuously scans and transmits the condition of all alarm points and running indication to the Computer Logger in the Process Control Room in the Main Pumping Station. Individual alarms and status are displayed by the computer logger.

E. SLUDGE FEED PUMPING EQUIPMENT: BTB-SFP-1, 2, 3, and 4

(1) DESCRIPTION

The sludge feed pumps are provided to pump waste activated sludge to the belt thickener equipment (See Figure III-ST-BTB-3). Under normal operation, one sludge feed pump will feed one belt thickener.

The Sludge Feed Pumping Equipment consists of four sludge feed pumps, designated BTB-SFP-1, 2, 3, and 4, associated variable speed drives, drive motors and controls.

The 40 hp sludge feed pumps are single stage, progressive cavity, positive displacement, non-clogging type pumps. Each sludge feed pump has a rated flow capacity of 250 gpm to 750 gpm at a total discharge pressure of 20 psig. The sludge feed pumps in the Belt Thickener Building are operated and controlled from the Sludge Feed Pump Control Panel (SFPCP) or from the Belt Thickener Building Control Panel (BTBCP).

The Sludge Feed Pump Control Panel (SFPCP) is equipped with an AUTO/BYPASS selector switch, a LOCAL/REMOTE speed control selector switch, START and STOP push buttons, a RESET push button, a speed potentiometer, speed indicator, an elapsed time meter, and sludge pump RUN, LOCAL, REMOTE, BYPASS, AUTO, DRIVE FAIL and TRIP indicating lights. The Belt Thickener Building Control Panel (BTBCP) is equipped with a speed potentiometer, a speed indicator, pump RUN indicating light, and LOCAL/REMOTE speed control indicating lights.

Each sludge feed pump is equipped with an ON/OFF-LOCKOUT switch, a START push button, a high and low discharge pressure switches and a low seal water pressure switch at the unit.

(2) NORMAL OPERATION

The sludge feed pumping equipment is controlled from the SFPCP in the Electrical Room and the BTBCP in the Control Room of the Belt Thickener Building. The sludge feed pumping equipment is operated only when sludge is to be fed to the belt thickeners.

All pumping units are operable in two modes. Under normal operation, when the BYPASS/AUTO selector switch on the SFPCP is set in the AUTO mode, the associated pump will start and stop automatically in accordance with logic sequence signals from an associated Belt Thickener Control Panel (BTCP) when preconditions described under the subsection headed "Belt Thickener Equipment" are satisfied.

Under normal operation, when the SFPCP LOCAL/REMOTE selector switch is in the REMOTE position, sludge feed pump speed control is manually adjustable from the speed potentiometer located on the Belt Thickener Building Control Panel (BTBCP).

(3) START-UP AND SHUTDOWN PROCEDURES

To start up and shutdown the sludge feed pumping equipment, use the following procedures:

a. START-UP

- Verify operation of at least one sludge grinder or that grinder bypass valve is open
- Open manually operated valves on the intake and discharge sides for the appropriate sludge feed pump to direct sludge flow to the selected belt thickener (See Figure III-ST-BTB-3)
- Close the circuit breaker on MCC-87 to energize the SFPCP
- Close the circuit breaker on SFPCP to energize the selected pump
- Place the AUTO/BYPASS selector switch on the SFPCP in the AUTO position
- Place the LOCAL/REMOTE selector switch on the SFPCP to the REMOTE position allowing feed pump speed control at BTBCP in the Control Room of the Belt Thickener Building

- Verify the ON/OFF switch at the pump is in the ON position

- Start up the associated belt thickener

NOTES

Sludge feed pumps will start up automatically after the belt thickener start-up preconditions have been satisfied. Refer to the subsection headed "Belt Thickener Equipment" for belt thickener start-up and shutdown procedures.

- Adjust pumping rate to desired sludge flow with BTBCP mounted speed potentiometer (sludge flow rate is indicated on the BTBCP)

b. SHUTDOWN

- Initiate a programmed shutdown of the associated belt thickener as described under the subsection headed "Belt Thickener Equipment".

NOTES

If maintenance is to be performed on a sludge feed pump, open the circuit breaker on the SFPCP, turn the ON/OFF switch at the pump to the OFF position and engage the locking device. Follow approved **Lockout/Tagout** procedures (See Chapter VI, Safety).

A sludge pump failure and shutdown will automatically shutdown the associated belt thickener equipment, and polymer feed unit.

(4) ALTERNATE OPERATION

An alternate mode of operation is permitted when the BYPASS/AUTO selector switch is set in the BYPASS mode. The associated pumping unit can be started and stopped manually from the SFPCP by means of START/STOP push buttons or started manually at the pump by means of a START push button which are enabled in the BYPASS mode.

WARNING

Operation of a sludge feed pump in the BYPASS mode isolates the pump from the protective interlock shutdown control as described for normal operation.

When the LOCAL/REMOTE selector switch on the SFPCP is in the LOCAL position, pump speed control is manually adjustable from the speed potentiometer on the SFPCP.

(5) MONITORS AND ALARMS

Each sludge feed pump is equipped with a pressure gauge on its suction pipe and a pressure gauge and pressure switch on its discharge pipe. A pressure switch is also provided on the seal water supply pipe to each sludge feed pump. Sludge pumps automatically shut down on variable speed drive failure, motor overload and shutdown after a time delay on high discharge pressure, low discharge pressure and low seal water pressure.

NOTES

The time delay on high pressure shutdown should normally be set at "zero".

Shutdown of a pump on low pressure may indicate that sludge is not getting to the pump. Progressive cavity pumps cannot run dry without damage.

Each sludge feed pump is provided with RUN and LOCAL/REMOTE speed control indicating lights on the SFPCP and the BTBCP. Audible and visual alarm functions on the BTBCP annunciator include a fault/trip, high discharge pressure, low discharge pressure and low seal water pressure for each pump.

NOTE

Shutdown of any associated thickener equipment (i.e., belt thickener, sludge feed pump, polymer feed unit or thickened sludge pump) operating in the automatic mode will initiate automatic shutdown of all associated thickener equipment that is operating within the electrically interlocked control system.

The Remote Transmission Unit in the Control Room continuously scans and transmits the condition of all alarm points and running indication to the Computer Logger in the Process Control Room in the Main Pumping Station. Individual alarms and status are displayed by the computer logger.

F. BELT THICKENER EQUIPMENT: BTB-BT-1, 2 AND 3

(1) DESCRIPTION

The Belt Thickener Equipment is provided to thicken waste activated sludge, that is reduce its volume, prior to anaerobic digestion.

The Belt Thickener Equipment consists of three belt thickeners with spray wash systems, drainage pans and piping, Local Thickener Control Panel (LTCP), and the Belt Thickener Control Panel (BTCP).

Each Belt Thickener has a 2.2-meter wide belt with an effective width of 2.0 meters, arranged to provide gravity drainage of the sludge. Each belt thickener is provided with an in-line vortex mixer and conditioning chamber for mixing and flocculation of sludge with polymer prior to discharging the flocculated sludge to the gravity dewatering zone of the belt thickener.

Spray wash systems are provided for each thickening belt. Each spray wash system consists of a spray water header, valving, self-cleaning brush, non-clogging nozzles and hood enclosures. The built-in brush for the nozzle cleaning is provided with hand wheel operation from the outside of the belt thickener frame.

(2) NORMAL OPERATION

The belt thickener equipment is controlled from either the thickener's BTCP in the Electrical Room or the Local Thickener Control Panel (LTCP) on the thickener unit (typical for all three thickeners). Automatic operation of the belt thickeners requires that the associated electrically interlocked sludge thickening equipment is in automatic mode and that the preconditions for each thickener have been satisfied.

The Sludge Thickening Equipment interlocked electrically with the BTCP of the belt thickener is:

- Associated Thickened Sludge Pumps
- Associated Sludge Feed Pumps
- Associated Polymer Feed Units

The BTCP is equipped with a keyed LOCAL/REMOTE/AUTO/OFF selector switch. The local position allows manual control at the BTCP. The remote position allows manual control at the LTCP. Either of the LOCAL or REMOTE positions put the belt thickener in a manual mode and therefore will not initiate automatic operation of the associated interlocked sludge thickening equipment listed above.

With the LOCAL/REMOTE/AUTO/OFF selector switch in the LOCAL position, the Belt Thickener Control Panel (BTCP) is enabled. This panel provides an EMERGENCY STOP push button, OPEN/CLOSE push buttons for air supply valve and washwater valve actuation and START/STOP push buttons to operate the main belt drive unit.

With the LOCAL/REMOTE/AUTO/OFF selector switch in the REMOTE position the Local Thickener Control Panel (LTCP) is enabled. This panel provides similar controls as described for the BTCP in addition to a speed control potentiometer and JOG FWD and JOG REV push buttons.

With the LOCAL/REMOTE/AUTO/OFF selector switch in the AUTO position, the automatic sequencing mode is enabled. The automatic mode of Belt Thickener operation is completed by placing the BYPASS/AUTO selector switch on the BTCP in the AUTO position. When the BTCP selector switch is in the AUTO position and the PROGRAMMED START push button is depressed, the washwater valve, the belt thickener drive, the air supply valve, and the selected sludge feed and thickened sludge pumps and polymer feed unit are energized in sequence. Failure of any equipment to start will not allow start up of the polymer feed unit, sludge feed pump or thickened sludge pump and will initiate an automatic shutdown (timed) of all associated belt thickener equipment.

In the BYPASS position the belt thickener sequenced operation may be performed without the associated thickened sludge pump, polymer feed unit and sludge feed pump starting automatically. This equipment would need to be started and controlled manually.

Low air pressure, excessive belt side travel, low washwater pressure, broken belt, emergency stop signal and drive failure will instantly shutdown all associated belt thickener equipment.

(3) START-UP AND SHUTDOWN PROCEDURES

To start up and shut down the belt thickener in the automatic mode, use the following procedures:

a. AUTOMATIC PROGRAMMED START-UP

- Select the Thickened Sludge Pump to be used with the Thickener and set the MANU-AL/AUTO start-up selector switch to the AUTO position at the TSPCP. Set all manual inlet and outlet valves.

- Manually select the valves for the sludge feed pump and polymer feed unit to be used as described under the sections headed "Sludge Feed Pumping Equipment" and "Polymer Feed Unit" and place the Sludge Feed Pump and Polymer Feed Unit indicator selector switches on the BTCP to the I.D. number of the selected pumps

- Check to see if POWER ON lights are on and the EMERGENCY STOPS are reset

- Move BYPASS/AUTO selector switch on BTCP to the AUTO position

- Check that the fault lights for Low Air, Belt Limit, Low Water Pressure, Belt Break, Emergency Stop, Drive Failure and Incomplete Start-up are OFF

- Set the LOCAL/REMOTE/AUTO/OFF selector switch to the AUTO position

- The AUTOMATIC PROGRAM START push button may be pushed at either the BTCP in the electrical room or the BTBCP in the control room. Its indicating light/push button will flash to indicate that the automatic program has started. At this point the BTCP will control the subsequent operation of the thickener without the operator's assistance. After the program is completed the indicating light/push button will illuminate continuously to indicate the thickener is operating in the automatic mode.

- The washwater valve and air valve open immediately

- The selected polymer feed unit primary dilution water valve opens immediately (If the polymer blending system is full of dilute polymer or water when the valve is opened, the flow of liquid into the flocculation tank will initiate immediately at a low rate)

- The belt thickener drive will start after an adjustable time delay initially set for 5 seconds

- The selected polymer feed unit will start feeding neat polymer to the blender after the blending unit is full

- The selected thickened sludge pump will be enabled after an adjustable time delay initially set for 3 minutes. When the level in the belt thickener discharge hopper reaches 3 inches the pump will start

- The secondary dilution water valve on the selected polymer feed unit will open after the blending unit is full

- The selected sludge feed pump will start after an adjustable time delay initially set for 6 minutes

NOTE

If either the associated sludge feed pump or the polymer feed unit AUTO/BYPASS selector switch on the SFPCP and polymer feed unit, respectively, are set on BYPASS, neither unit will be enabled as indicated above. In addition, if a unit selection is duplicated on two different BTCPs, neither belt thickener will complete its startup.

b. AUTOMATIC PROGRAMMED SHUTDOWN

- The normal shutdown provides an orderly means of shutting down the thickener and related equipment. It is activated by pressing the PROGRAMMED SHUTDOWN push button at either the BTCP or the BTBCP. It is also activated by incomplete start-up or failure of the Sludge Feed Pump, failure of the Thickened Sludge Pump, failure of the Sludge Grinders, high level in the belt thickener discharge hopper or failure of the Polymer Feed Unit. In either case, its indicating light will flash to indicate that a programmed shutdown is in progress. At this time, the PROGRAMMED START-UP light turns off and the following sequence of events occurs.

- The selected sludge feed pump and polymer feed unit stop immediately.

- The Thickened Sludge Pump will stop after 30 second adjustable time delay

- The belt thickener drive will stop and washwater valve and air valve will close after a 120 second adjustable time delay

- When the programmed stop is complete the indicating light will illuminate continuously

- Drain the sludge feed hopper manually by opening drain valve. Shut valve when hopper is fully drained.

NOTE

If maintenance is to be performed on a Belt Thickener, open the circuit breaker on the BTCP, turn the L/R-LO switch at the Thickener to the LO position and engage the locking device. Follow approved **Lockout/Tagout** procedures (See Chapter VI, Safety).

(4) ALTERNATE OPERATION

The belt thickener equipment can also be operated in the manual mode. To start-up and shut-down the belt filter presses in manual mode, use the following procedures:

a. START-UP

- Check to see if POWER ON light is on and all EMERGENCY STOP push buttons are reset
- Check the fault lights to make sure that air and washwater pressures are normal and the belts are not overrun or broken. These lights should be off
- Set all valve selector switches to the CLOSE position
- Set the LOCAL/REMOTE/AUTO/OFF selector switch on the BTCP to the LOCAL or REMOTE position

NOTE

When LOCAL position is selected, the operator controls at the BTCP are enabled. When REMOTE is selected, the operator controls at the LTCP are enabled.

- Select which polymer feed unit, sludge feed pump and thickened sludge feed pump are to operate and set associated inlet and outlet valves
- Push the air supply valve indicating light/OPEN push button. Its indicating light will turn on to indicate the valve is energized to open
- Push the belt thickener main belt drive indicating light/START push button. Its indicating light will turn on to indicate the belt drive is energized
- At LTCP adjust belt speed and belt tension as required
- Push the washwater valve indicating light/OPEN push button. Its indicating light will turn ON to indicate that the valve is energized to open
- Start the polymer feed unit associated with the belt thickener being started
- Start the thickened sludge pump associated with the belt thickener being started

- Start sludge feed pump associated with the belt thickener being started

- Adjust flows and speed as required for proper operation

WARNING

In this mode of operation electrically interlocked safety shutdown controls are disabled and a malfunction occurring on an associated thickener equipment component such as a feed pump will NOT shutdown other associated equipment.

b. SHUTDOWN

- Stop the corresponding sludge feed pump and polymer feed unit

- Wait approximately 10 minutes until all sludge is evacuated from the system

- STOP the thickened sludge pump

- Allow the remaining equipment to run for another 2 minutes, or until the belt thickener is fully washed

- Press the STOP push button for the belt thickener drive and CLOSE push buttons for the washwater and air supply valves

- Hose down the belt thickener to remove all sludge from the machinery

- Drain the sludge feed hopper manually by opening drain valve. Shut valve when hopper is fully drained.

c. BELT THICKENER DRIVE JOGGING OPERATION

The thickener jogging operation is used to allow the operator to maintain the thickener. In order to utilize the option, place the LOCAL/REMOTE/AUTO/OFF selector switch on the BTCP in the REMOTE position. In order to jog the thickener, air and washwater pressures must be normal. The thickener can be jogged in the forward or reverse directions, from the JOG push buttons located in the LTCP.

d. BYPASS MODE OPERATION

The bypass mode operation is used to run the belt thickener without running the associated support equipment. In order to utilize this option, the LOCAL/REMOTE/AUTO/OFF selector switch in the BTCP must be set to AUTO. The BYPASS/AUTO selector switch in the BTCP must be set to BYPASS. Once the AUTO START push button is depressed, the automatic programmed startup will commence, bypassing the startup of the selected thickened sludge pump, polymer feed unit and sludge feed pump.

e. NON-PROGRAMMED AND EMERGENCY SHUTDOWN

When either non-programmed or emergency shutdown occur, all the controlled drives are stopped and all of the controlled valves are closed.

Emergency Shutdown takes place instantly when any of the following conditions occur:

- Emergency Stop push button is depressed
- Excessive belt side travel
- Broken belt
- Low washwater pressure
- Low air pressure
- Belt drive failure

Non-Programmed Automatic shutdown in the same sequence as described previously for Automatic Programmed Shutdown takes place when any of the following conditions occur:

- An incomplete automatic programmed start-up
- A high level in the thickened sludge hopper
- Shutdown of the associated Sludge Feed Pump, Polymer Feed Unit or Thickened Sludge Pump.

(5) MONITORS AND ALARMS

Each Belt Thickener is provided with monitoring on its LTCP, BTCP, and the BTBCP.

The LTCP is provided with belt tension and belt regulator pneumatic pressure gauges and adjustment dials for monitoring and adjustment of belt tension and tracking. The LTCP has OPEN indicating lights for air supply and washwater valves and ON indication light for belt drive. The LTCP has a system failure indicating light. The LTCP has indicators for belt speed and washwater pressure.

The BTCP is provided with the following indicating lights and audible and visual alarm functions:

- System control power on indicating light
- Washwater valve energized indicating light
- Belt Thickener drive energized indicating light
- Air supply valve energized indicating light
- Auto START and Auto STOP indicating lights.
- Elapsed time meter
- Water pressure fault light
- Low air pressure fault light
- Belt side travel fault light
- Broken belt fault light
- Emergency stop fault light
- Drive failure fault light
- Incomplete start-up fault light

An alarm horn with silence push button is provided on each BTCP that is energized upon occurrence of any fault condition.

The BTBCP has the monitoring devices listed below associated with automatic operation of the belt thickeners:

- Automatic program start indicating light that illuminates continuously under normal automatic operation
- Belt thickener failure alarm
- Belt thickener discharge hopper high level alarm

The Remote Transmission Unit in the Control Room continuously scans and transmits the condition of all alarm points and running indication on BTBCP to the Computer Logger in the Process Control Room in the Main Pumping Station. Individual alarms and status are displayed by the computer logger.

G. LIQUID POLYMER STORAGE, HANDLING AND FEED EQUIPMENT

(1) GENERAL

The Liquid Polymer Storage, Handling and Feed Equipment is provided to store full strength (neat) liquid polymer, to automatically make up batches of diluted polymer solution and to feed polymer into the sludge feed piping ahead of the belt thickener equipment (see Figure III-ST-BTB-4).

Equipment consists of the following major components:

- Two Liquid Polymer Storage Tanks, BTB-PST-1 and BTB-PST-2
- One Liquid Polymer Transfer Pump, BTB-PTP-1
- Four Liquid Polymer Feed Units, BTB-PFU-1, BTB-PFU-2, BTB-PFU-3, and BTB-PFU-4

Liquid polymer is delivered by tank truck and stored in the Belt Thickener Building in two 1,800-gallon storage tanks. A transfer pump is provided to transfer liquid polymer from one storage tank to the other or for hydraulic mixing. Four Liquid polymer feed units are provided. Each unit is provided to automatically mix the neat liquid polymer from the storage tanks with water to provide diluted polymer at a desired solution concentration (see Figure III-ST-BTB-5).

(2) LIQUID POLYMER STORAGE TANKS BTB-PST-1 AND 2

a. DESCRIPTION

Each 1,800-gallon liquid polymer storage tank is constructed of fiber glass reinforced plastic with closed top and dished bottom. Each tank is 6 feet in diameter with an overall height of 15 feet.

b. MONITORS AND ALARMS

Each Liquid Polymer Storage Tank has a ultrasonic level sensor. Tank level is displayed at the Belt Thickener Building Control Panel (BTBCP), at the tanks and adjacent to the neat polymer unloading station located outside. The low level and high level alarms are displayed at the BTBCP. Tank level can also be visually observed through the site tube attached to each tank.

The Remote Transmission Unit in the Control Room continuously scans and transmits the polymer level status of each tank to the Computer Logger in the Process Control Room in the Main Pumping Station.

(3) LIQUID POLYMER TRANSFER PUMP BTB-PTP-1

a. DESCRIPTION

The liquid polymer transfer pump is provided to transfer neat polymer from a liquid polymer storage tank back to the same tank for mixing or to the other tank for transfer.

The 5-hp pump, designated BTB-PTP-1, is a constant speed, single stage, low shear, non-clogging, progressive cavity, positive displacement type pump. The pump has a rated capacity of 25 gpm at a discharge head of 69 feet at a pump speed of 246 rpm.

The pump is provided with a RESET push button, a red running light, LOR tripped light and an elapsed time meter on MCC-87.

A ON/OFF switch with a locking device for the OFF position and START push button are provided at the unit.

b. NORMAL OPERATION

Under normal operation, when the selector switch is in the ON position and the START push button is depressed, the pump will operate continuously.

c. START-UP AND SHUTDOWN PROCEDURES

To start up and shut down the polymer transfer pump, use the following procedures:

1. Start-Up
   - Verify that the manually operated valves on the suction and discharge of the polymer transfer pump are oriented to pump polymer from and to the desired tanks.
   - Close the circuit breaker on MCC-87
   - Turn the ON/OFF switch to ON at the unit
   - Depress the START push button at the unit

2. Shutdown
   - Turn the ON/OFF switch at the unit to OFF

NOTE

If maintenance is to be performed on the liquid polymer transfer pump, open the circuit breaker on MCC-87 and turn the ON/OFF switch at the unit to OFF and engage the locking device. Follow approved **Lockout/Tagout** procedures (See Chapter VI, Safety).

WARNING

Shutdown the polymer transfer pump while deliveries of neat polymer are being made to prevent inadvertent pressurization of the polymer feed line (See Figure III-ST-BTB-4).

d. MONITORS AND ALARMS

An operational indicating light and an elapsed time meter are provided on MCC-87. Visual and audible alarms are provided on the BTBCP annunciator panel for high pump discharge pressure and fault/trip.

The Remote Transmission Unit in the Control Room continuously scans and transmits the condition of all alarm points and running indication to the Computer Logger in the Process Control Room in the Main Pumping Station. Individual alarms and status are displayed by the computer logger.

(4) LIQUID POLYMER FEED UNITS BTB-PFU-1, 2, 3 AND 4

a. DESCRIPTION

Each of the four Liquid Polymer Feed Units are provided to automatically prepare a dilute liquid polymer solution by mixing neat liquid polymer from the liquid polymer storage tanks discussed hereinbefore with a preset amount of water to supply a liquid polymer solution having a full strength polymer concentration in the range of 0.5 percent to 1.0 percent.

Each liquid polymer feed unit consists of a primary dilution unit and a secondary dilution unit. Each primary dilution unit consists of the following major components:

- One plant water flow control valve
- One plant water rotameter
- One plant water solenoid valve
- One undiluted polymer variable speed metering pump
- One mixing chamber

Each secondary dilution unit consists of the following major components:

- One plant water flow control valve
- One plant water rotameter
- One plant water solenoid valve
- One confluence assembly
- One static mixer

b. NORMAL OPERATION

Each liquid polymer feed unit has a ON/OFF/AUTO selector switch at the unit.

Under normal operation, when the ON/OFF/AUTO selector switch is in the AUTO position, the liquid polymer feed unit and solenoid valves are controlled by remote contacts at the Belt Thickener Control Panel (BTCP) and the rate is controlled by the remote potentiometer located on the Belt

Thickener Building Control Panel (BTBCP). In the ON position, the liquid polymer feed rate is controlled by the potentiometer located on the unit. The rate of primary and secondary dilution water is manually controlled at the unit.

NOTE

A back-up effluent water supply connection is provided for dilution water supply in the event of loss of plant water supply. An isolation valve is provided to separate the plant water and effluent water feeds (refer to Figure III-ST-BTB-4). This valve must remain closed under normal conditions. Before opening this valve, close the plant water valve where the plant water system enters the Belt Thickener Building.

c. START-UP AND SHUTDOWN PROCEDURES

To start up and shut down the liquid polymer feed units, use the following procedures:

1. Start-Up

- Open the manually operated valves between the liquid polymer storage tanks and the selected liquid polymer feed unit, and the valves between the liquid polymer feed unit and the selected belt thickener
- Verify that plant water system manual valves are open
- Close the circuit breaker on the selected liquid polymer feed control panel mounted on the liquid polymer feed unit
- Place the ON/OFF/AUTO selector switches on the liquid polymer feed unit in the AUTO position
- Adjust the primary and secondary dilution water flow rates as desired

2. Shutdown

- Place the ON/OFF/AUTO selector switches on the liquid polymer feed unit control panel in the OFF position

d. MONITORS AND ALARMS

Each liquid polymer feed unit is provided with RUN indicating lights for the following:

- Polymer Feed Pump
- Primary Mixing Chamber
- Primary Dilution Water
- Secondary Dilution Water

Each liquid polymer feed unit is provided with a visual alarm and automatic shutdown for dilution water pressure loss, mixer motor overload and polymer feed pump overload.

Run status and failure of the liquid polymer feed unit is displayed at the Belt Thickener Building Control Panel (BTBCP). Failure of the Liquid Polymer Feed Unit will cause the Belt Thickener to go into a programmed shutdown sequence.

The Remote Transmission Unit in the Control Room continuously scans and transmits the condition of all alarm points and running indication to the Computer Logger in the Process Control Room in the Main Pumping Station. Individual alarms and status are displayed by the computer logger.

H. THICKENED SLUDGE PUMPING EQUIPMENT: BTB-TSP-1A, 1B, 2A, 2B, 3A, AND 3B

(1) DESCRIPTION

The Thickened Sludge Pumping Equipment in the Belt Thickener Building is provided to pump the thickened sludge from the belt thickener equipment to the Mixed Sludge Pumping Station for treatment in the Anaerobic Digestion Facilities (See Figure III-ST-BTB-3).

The Thickened Sludge Pumping Equipment consists of six thickened sludge pumps, designated BTB-TSP-1A, 1B, 2A, 2B, 3A and 3B, associated variable speed drives, drive motors and controls.

The 20 hp thickened sludge pumps are rotary trilobed, heavy duty, positive displacement pumps. These pumps can run dry without damage. Each thickened sludge pump has a rated flow capacity of 200 gpm at a total discharge head of 105 feet. The thickened sludge pumps in the Belt Thickener Building are operated and controlled from the Thickened Sludge Pump Control Panel (TSPCP) or the Belt Thickener Building Control Panel (BTBCP).

The Thickened Sludge Pump Control Panel (TSPCP) is equipped with MANUAL/AUTO selector switch for start-stop control, AUTO/MANUAL and LOCAL/REMOTE speed control selector switches, START and STOP push buttons, a RESET push button, a speed potentiometer, speed indicator, an elapsed time meter, and thickened sludge pump RUN and TRIP indicating lights. Each of the three sections on the TSPCP contain controls for two pumps (1A & 1B, 2A & 2B, or 3A & 3B) and one variable frequency drive. The Belt Thickener Control Panel (BTCP) is equipped with a selector switch to determine which pump (A or B) is selected. The Belt Thickener Building Control Panel (BTBCP) is equipped with speed potentiometers, speed indicators, pump RUN indicating lights, pump selected light, and LOCAL/REMOTE speed control indicating lights.

Each thickened sludge pump is equipped with an ON/OFF-LOCKOUT switch, a START push button, a high discharge pressure switch and a low seal water pressure switch at the unit.

(2) NORMAL OPERATION

The thickened sludge pumping equipment is controlled from the TSPCP in the Electrical Room and BTBCP in the Control Room of the Belt Thickener Building. The thickened sludge pumping equipment is operated only when the belt thickener equipment is operating.

All pumping units are operable in two modes. Under normal operation, when the MANUAL/AUTO selector switch for start-stop control on the TSPCP is set in the AUTO mode, the associated pump (either A or B as selected on the BTCP) will start and stop automatically in accordance with logic sequence signals from an associated Belt Thickener Control Panel (BTCP) when preconditions described under the subsection headed "Belt Thickener Equipment" are satisfied. Thickened sludge pump speed is automatically adjusted by the thickened sludge hopper ultrasonic level sensor when the AUTO/MANUAL selector switch for speed control on the TSPCP is set in the AUTO mode.

When the AUTO/MANUAL selector switch for speed control is in the MANUAL position and the TSPCP LOCAL/REMOTE selector switch is in the LOCAL position, thickened sludge pump speed control is manually adjustable from the speed potentiometer located on the TSPCP. Under normal operation, when the TSPCP LOCAL/REMOTE selector switch is in the REMOTE position, thickened sludge pump speed control is manually adjustable from the speed potentiometer located on the Belt Thickener Building Control Panel (BTBCP).

(3) START-UP AND SHUTDOWN PROCEDURES

To start-up and shutdown the thickened sludge pumping equipment, use the following procedures:

a. START-UP

- Open manually operated valves on the intake and discharge sides for the appropriate thickened sludge pump to direct sludge flow from the selected belt thickener (see Figure III-ST-BTB-3)
- Close the circuit breaker on MCC-87 to energize the TSPCP
- Close the circuit breaker on TSPCP to energize the selected pump
- Place the AUTO/MANUAL selector switch for speed control on the TSPCP in the AUTO position
- Place the MANUAL/AUTO selector switch for start-stop control on the TSPCP in the AUTO position
- Verify the ON/OFF switch at the pump is in the ON position
- Start-up the associated belt thickener

NOTES

Thickened sludge pumps will start-up automatically after the belt thickener start-up preconditions have been satisfied. Refer to the subsection headed "Belt Thickener Equipment" for belt thickener start-up and shutdown procedure.

- Pump speed will automatically be adjusted to respond to the level in the thickened sludge hopper

b. SHUTDOWN

- Shutdown the associated belt thickener as described under the subsection headed "Belt Thickener Equipment."

NOTES

If maintenance is to be performed on a thickened sludge pump, open the circuit breaker on the TSPCP, turn the ON/OFF switch at the pump to the OFF position and engage the locking device. Follow approved **Lockout/Tagout** procedures (See Chapter VI, Safety).

A thickened sludge pump failure and shutdown will automatically shutdown the associated belt thickener equipment.

(4) ALTERNATE OPERATION

An alternate mode of operation is permitted when the MANUAL/AUTO selector switch for start-stop operation is set in the MANUAL mode. The associated pumping unit is started and stopped manually from the TSPCP by means of START/STOP push buttons or started manually at the pump by means of a START push button which is enabled in the MANUAL mode.

WARNING

Operation of a thickened sludge pump in the MANUAL mode isolates the pump from the protective interlock shutdown control as described for normal operation.

When the LOCAL/REMOTE selector switch on the TSPCP is in the LOCAL position, pump speed control is manually adjustable from the speed potentiometer on the TSPCP. When the LOCAL/REMOTE selection switch is in the REMOTE position, pump speed control is manually adjustable from the speed potentiometer on the BTBCP.

(5) MONITORS AND ALARMS

Each thickened sludge pump is equipped with a pressure gauge and pressure switch on its discharge pipe. A pressure switch is also provided on the seal water supply pipe to each thickened sludge pump. Sludge

pumps automatically shutdown on variable speed drive failure, motor overload, discharge hopper high level and high discharge pressure and low seal water pressure.

PUMP A, PUMP B, RUN and LOCAL/REMOTE speed control indicating lights are provided on the TSPCP and the BTBCP. Audible and visual alarm functions on the annunciators at the BTBCP include a fault/trip, high discharge pressure, low seal water pressure for each pump and for high level in the thickened sludge hopper.

NOTE

Shutdown of any associated thickener equipment (i.e., belt thickener, sludge feed pump, polymer feed unit or thickened sludge pump) initiates automatic shutdown of all associated thickener equipment that is operating within the electrically interlocked control system.

The Remote Transmission Unit in the Control Room continuously scans and transmits the condition of all alarm points and running indication to the Computer Logger in the Process Control Room in the Main Pumping Station. Individual alarms and status are displayed by the computer logger.

I. EFFLUENT WATER BOOSTER PUMPING EQUIPMENT BTB-EWP-1 AND 2

(1) DESCRIPTION

The Effluent Water Booster Pumping Equipment is provided in the Belt Thickener Building to supply effluent water to each belt thickener spray wash system (see Figure III-ST-BTB-4 Effluent Water Diagram).

The effluent water booster pumping equipment consists of two pumps, designated BTB-EWP-1, and BTB-EWP-2 associated drive units, and controls.

The pumps are single-stage, horizontal shaft, centrifugal type, end suction pumps driven by 7-1/2 hp constant speed motors. Each effluent water booster pump has a nominal rated capacity of 120 gpm, a rated head of 140 feet, and a pump speed of 3550 rpm.

The pumps are to be started and stopped from the BTBCP. Each pump is provided with an illuminated red running START button and STOP button on the BTBCP. Each pump is provided with RUNNING and LOR TRIPPED indicating lights and RESET push button on MCC-87.

An ON/OFF switch with a locking device for the OFF position, TEST push button and a low seal water pressure switch are provided at the pump.

(2) NORMAL OPERATION

Under normal operation, one effluent water booster pump must be in operation when a belt thickener is operating. The second pump is provided as a standby unit.

Effluent washwater solenoid valves provided at each belt thickener will open when the belt thickener has initiated startup as described under the section headed "Belt Thickener Equipment". Shutdown of a belt thickener or any of its interlocked equipment, when operating automatically, will close the effluent washwater solenoid valve but will not shutdown the booster pump.

(3) START-UP AND SHUTDOWN PROCEDURES

To start up and shutdown the effluent water booster pumps, use the following procedures:

a. START-UP

- Open the manually operated suction and discharge valves for the selected effluent water booster pump
- Open the manually operated valves at each selected belt thickener
- Close the circuit breaker on MCC-87
- Make sure that the ON/OFF switch at the unit is ON
- Depress the START push button on BTBCP

b. SHUTDOWN

- Depress the STOP push button at BTBCP or turn the ON/OFF switch at the effluent water booster pump to OFF

NOTES

Stopping the effluent water booster pump before the belt thickener process is stopped will initiate a non-programmed emergency shutdown due to low washwater pressure.

If maintenance is to be performed on the pump, open the circuit breaker on MCC-87, turn the ON/OFF switch at the unit to OFF and engage the locking device. Follow approved **Lockout/Tagout** procedures (See Chapter VI, Safety).

(4) MONITORS AND ALARMS

Red running lights for each pump are provided on MCC-87 and on the BTBCP. An elapsed time meter is provided on MCC-87. Audible and visual alarms are provided at the BTBCP annunciator for pump motor overload trip.

The Remote Transmission Unit in the Control Room continuously scans and transmits the condition of all alarm points and running indication to the Computer Logger in the Process Control Room in the Main Pumping Station. Individual alarms and status are displayed by the computer logger.

J. HOISTING EQUIPMENT: BTB-OC-1

(1) DESCRIPTION

The hoisting equipment in the Belt Thickener Building consists of one 3-ton capacity, electric motor operated, double girder, top running bridge crane, designated BTB-OC-1.

(2) NORMAL OPERATION

The overhead top running crane is provided with a pendant control station with push buttons which control operation of the crane, hoist, and trolley motors.

Each pendant control station is provided with FORWARD-REVERSE push buttons to operate the trolley motor and the crane motor and UP-DOWN push buttons to operate the hoist motor.

K. VENTILATING AND AIR CONDITIONING EQUIPMENT: BTB-AC-1, BTB-S-1, BTB-REF-1, 2, 3, 4 AND 5

(1) DESCRIPTION

The Ventilation and Air Conditioning Equipment includes five roof exhaust fans, designated BTB-REF-1, 2, 3, 4 and 5, one supply fan, designated BTB-S-1 and one air conditioner unit, designated BTB-AC-1.

a. ROOF EXHAUST FANS: BTB-REF-1, 2 AND 3

Roof exhaust fans, BTB-REF-1, 2 and 3, serve the Belt Thickener Equipment Room. Each roof exhaust fan is a single speed, centrifugal belt driven type, with a ventilating capacity of 9,000 cfm at fan speed of 387 rpm. Each fan is provided with a 1 horsepower motor.

b. ROOF EXHAUST FAN: BTB-REF-5

Exhaust fan, BTB-REF-5, serves the Electrical Room. The exhaust fan is a single speed, centrifugal belt driven type with a ventilating capacity of 4300 cfm at a fan speed of 668 rpm. The fan is provided with a 1 horsepower motor.

c. TOILET EXHAUST FAN: BTB-REF-4

Roof exhaust fan, BTB-REF-4, serves the Toilet Room. The fan is of the roof mounted type with a ventilating capacity of 120 cfm at a motor speed of 950 rpm. The fan is provided with a 1/10 horsepower motor.

d. SUPPLY FAN: BTB-S-1

The supply fan, BTB-S-1, supplies fresh air to the carbon drum that purifies air prior to entering BTB-AC-1. BTB-S-1 is an epoxy coated, belt driven, radial fan with a capacity of 120 cfm at a fan speed of 4058 rpm and is provided with a 1 horsepower motor. The discharge duct of BTB-S-1 is equipped with a motor operated damper

e. AIR CONDITIONING UNIT: BTB-AC-1

The package air conditioning unit, BTB-AC-1, consists of a one-piece, two stage, water cooled air conditioning system for the Electrical and Control Rooms of the Belt Thickener Building. The air conditioning unit is provided with an indoor thermostat. The minimum total cooling capacity is 104,000 Btu/hr, at ultimate air flows of 4000 cfm. The system is initially set for air flows of 3200 cfm.

The control room is supplemented with heating by an electric fin tube convector unit.

(2) NORMAL OPERATION

a. ROOF EXHAUST FANS: BTB-REF-1, 2 AND 3

Roof Exhaust Fans BTB-REF-1, 2 and 3 are each provided with run indicating lights located on MCC-87. An ON/OFF switch with locking device for the OFF position and TEST push button is located at each unit.

Under normal operation, the fans are controlled through temperature control panel BTB-TCP-1 by a 3-stage adjustable room thermostat. Each fan has a HAND-OFF-AUTO selector switch in BTB-TCP-1. Roof Exhaust Fans BTB-REF-1, 2 and 3 are staged to come on as the temperature of the Equipment Room rises above 85°F, 90°F and 95°F, respectively. A smoke detector alarm in the inlet of each roof exhaust fan will cause all three fans to shutdown and energize an alarm at BTB-TCP-1.

b. EXHAUST FAN: BTB-REF-5

The roof exhaust fan is equipped with a run indicating light located on MCC-87. An ON-OFF switch with locking device for the OFF position and TEST push button is located at the unit.

Under normal operation, the fan is controlled through temperature Control Panel BTB-TCP-1 by a adjustable room thermostat. BTB-REF-5 is set to come on and initiate an alarm at BTB-TCP-1 when the temperature of the Electrical Room rises above 90°F. A motorized wall damper opens at the same time. The damper closes and the fan shuts down when the temperature drops below 85°F

c. ROOF EXHAUST FAN: BTB-REF-4

Under normal operation the Roof Exhaust Fan BTB-REF-4 is controlled to come on when the toilet room light is turned on and runs continuously through a time delay relay in BTB-TCP-1 for 5 minutes after the toilet room light is turned OFF.

d. SUPPLY FAN: BTB-S-1

Supply Fan BTB-S-1 is provided with ON-OFF switch with a locking device for the OFF position at the unit. The supply fan is provided with a red running light located on MCC-87.

Under normal operation, when the ON-OFF switch is ON, the supply fan and its motor operated discharge damper will operate continuously when Air Conditioning System BTB-AC-1 is operating.

e. AIR CONDITIONING SYSTEM: BTB-AC-1

Air Conditioner BTB-AC-1 serves the Electrical and Control Rooms in the Belt Thickener Building. BTB-AC-1 is a two stage water cooled air conditioning unit. BTB-AC-1 is controlled by a HAND-OFF-AUTO switch on Temperature Control Panel BTB-TCP-1. Under normal operation when the selector switch is in the AUTO position the conditioner fan runs continuously. Supply Fan BTB-S-1 is interlocked with the conditioner fan. A smoke detector in the supply duct

will stop the fans and energize an alarm at BTB-TCP-1. A 2-stage electric cooling thermostat in the Electrical Room sequences the two condensing units to maintain a room temperature of 78°F. As each compressor starts, a corresponding solenoid valve in the effluent water supply opens. Condenser water flow rate is controlled by a separate self-contained water regulating valve that senses refrigerant head pressure.

(3) START-UP AND SHUTDOWN PROCEDURES

To start up and shut down the ventilating and air conditioning equipment, use the following procedures:

a. START-UP

1. Roof Exhaust Fans: BTB-REF-1, 2 and 3
   - Close the circuit breakers at MCC-87
   - Place the ON-OFF switch at the unit in the ON position
   - Turn the HAND-OFF-AUTO switch at BTB-TCP-1 to the AUTO position
   - The fans will automatically start as room temperature rises above 85°F, 90°F and 95°F, respectively.

2. Roof Exhaust Fan: BTB-REF-5
   - Close the circuit breaker on MCC-87
   - Place the ON-OFF switch at the unit in the ON position
   - The fan will automatically start as the room temperature rises above 90°F.

3. Roof Exhaust Fan: BTB-REF-4
   - Close the breaker on LP-87B
   - The fan will come on when the light switch in the Toilet Room is ON

4. Supply Fan: BTB-S-1
   - Close the circuit breaker on MCC-87
   - Place the ON-OFF switch at the unit in the ON position
   - The fan will automatically come on when the HAND-OFF-AUTO switch for BTB-AC-1 at BTB-TCP-1 is turned to the AUTO position

5. Self-Contained Air Conditioner: BTB-AC-1
   - Close the circuit breaker on MCC-87
   - Close the disconnect switch at the unit
   - Turn the HAND-OFF-AUTO switch at BTB-TCP-1 to the AUTO position
   - The conditioning fan will operate continuously and when the thermostat in the Electrical Room rises above 78°F the compressor will start.

b. SHUTDOWN

- Roof Exhaust Fans: BTB-REF-1, 2 and 3

- Turn the ON-OFF switch at the unit to the OFF position or turn the HAND-OFF-AUTO switch at

BTB-TCP-1 to the OFF position

NOTE

If maintenance is to be performed on the fan, open the associated circuit breaker on MCC-87, place the ON-OFF switch at the unit in the OFF position and engage the locking device. Follow approved **Lockout/Tagout** procedures (See Chapter VI, Safety).

1. Roof Exhaust Fan: BTB-REF-5
   - Turn the ON-OFF switch at the unit to the OFF position.

NOTE

If maintenance is to be performed on the fan, open the associated circuit breaker on MCC-87, place the ON-OFF switch at the unit in the OFF position and engage the locking device. Follow approved **Lockout/Tagout** procedures (See Chapter VI, Safety).

2. Roof Exhaust Fan: BTB-REF-4
   - Turn OFF light in Toilet Room and fan will stop 5 minutes later or turn OFF breaker in LP-87B.

3. Supply Fan: BTB-S-1
   - Turn the HAND-OFF-AUTO switch for BTB-AC-1 at BTB-TCP-1 to the OFF position or turn the ON-OFF switch at the unit to the OFF position.

NOTE

If maintenance is to be performed on the fan, open the associated circuit breaker on MCC-87, place the ON-OFF switch at the unit in the OFF position and engage the locking device. Follow approved **Lockout/Tagout** procedures (See Chapter VI, Safety).

4. Self-Contained Air Conditioner: BTB-AC-1
   - Open the disconnect switch at the unit or turn the HAND-OFF-AUTO switch in BTB-TCP-1 to the OFF position

NOTE

If maintenance is to be performed on the air conditioning unit, open the disconnect switches at the unit and engage the locking device and the disconnect switch at MCC-87. Follow approved **Lockout/Tagout** procedures (See Chapter VI, Safety).

(4) MONITORS AND ALARMS

The Roof Exhaust Fans BTB-REF-1, 2 and 3 are provided with run status indicating lights located on the Motor Control Center MCC-87 and BTB-TCP-1. Alarm and shutdown are provided for roof exhaust fan motor overload and smoke detector alarm.

The Roof Exhaust Fan BTB-REF-5 is provided with run status indicating lights located on the Motor Control Center MCC-87 and BTB-TCP-1. Alarm and shutdown are provided for roof exhaust fan motor overload.

The Supply Fan BTB-S-1 is provided with red running indicator lights located on MCC-87 and BTB-TCP-1. Alarm and shutdown are provided for supply fan motor overload and smoke detector alarm.

The Self-contained Air Conditioner BTB-AC-1 is provided with a low voltage control panel and cooling thermostat. The compressor is protected by a high and low pressure limit switch. The blower motors are provided with internal thermostatic overheat protection.

L. SLUDGE FEED AND THICKENED SLUDGE FLOW METERS: FE-9, FE-120, 121, 122, 123

(1) FLOWMETER FE-9

The flowmeter FE-9 is provided to measure the total waste activated sludge flow rate to the Belt Thickener Building. Flowmeter FE-9 is located in the Sludge Treatment Building. Flowmeter FE-9 is a 6-inch diameter magnetic flowmeter with a flow range of 0 to 3000 gpm. The meter is provided with a teflon lining.

The flowmeter equipment consists of a meter, designated FE-9, a flow indicating transmitter at the meter, a combined recorder FR-9/123, combined indicator FI-9/123 and a totalizer on the BTBCP as diagrammed on Figure III-ST-BTB-2.

(2) FLOWMETERS FE-120, 121 AND 122

The flowmeters FE-120, 121 and 122 are provided to measure the unthickened waste activated sludge feed flow rate to each belt thickener. Flowmeters FE-120, 121 and 122 are each 4-inch diameter magnetic flowmeters with a flow range of 0-1000 gpm. The meters are provided with a teflon lining.

The flowmeter equipment consists of meters, designated FE-120, 121 and 122, a flow indicating transmitter at each meter, respective recorders, FR-120, 121 and 122, a combined indicator, FI-120/121/122 and totalizers on the Belt Thickener Building Control Panel (BTBCP) as diagrammed on Figure III-ST-BTB-2.

(3) FLOWMETER FE-123

Flowmeter FE-123 is provided to measure the total thickened sludge flow rate from the belt thickener equipment. Flowmeter FE-123 is a 4-inch diameter magnetic flowmeter with a flow range of 0 to 750 gpm. The meter is provided with a teflon lining.

The flowmeter equipment consists of a meter, designated FE-123, a flow indicating transmitter at the meter, a combined recorder FR-9/123, combined indicator FI-9/123, and a totalizer on the BTBCP as diagrammed on Figure III-ST-BTB-2.

M. WASHWATER FLOW METER: FE-124

Flowmeter FE-124 is provided to measure the effluent spray washwater flow rate to the belt thickening equipment.

Flowmeter FE-124 is a 2-inch diameter magnetic flow meter with a flow range of 0-200 gpm. The meter is provided with a teflon lining.

The flowmeter equipment consists of a meter, designated FE-124, a flow indicating transmitter at the meter, effluent washwater flow rate Indicator FI-124 and a totalizer on the BTBCP as diagrammed on Figure III-ST-BTB-2.

N. PLANT WATER

The plant water equipment in the Belt Thickener Building consists of piping and fittings, hose hydrants, a pressure gauge, and shutoff valves.

Plant water is supplied to the Belt Thickener Building by the plant water equipment located in the Sludge Treatment Building.

The plant water is supplied to the polymer system and for hosing down floors and equipment.

O. EFFLUENT WATER

The effluent water in the Belt Thickener Building consists of piping and fittings, shutoff valves, needle valves, flow indicators, booster pumps, low pressure alarms and hose hydrants.

Effluent water is supplied to the Belt Thickener Building by the general purpose effluent water pumps as described in the section headed "Filter Building and Nitrified Effluent Conduit" and by the effluent water booster pumps located in the Belt Thickener Building as described in the subsection "Effluent Wastewater Booster Pumping Equipment".

The effluent water is used for pump seal and lubrication water, for belt thickener spray washwater, and for hosing down belt thickener equipment.

P. PLANT AIR

The plant air equipment in the Belt Thickener Building consists of piping and fittings, shutoff valves, hose valves, in-line filters, pressure regulating valves, pressure gauges, pressure switches, air line lubricators, and moisture traps.

The plant air equipment supplies compressed air to pneumatically operated belt thickener controls and to hose connections.

Compressed air is supplied to the plant air equipment by the main plant air system described in the section headed "Main Pumping Station".

Q. POWER DISTRIBUTION SYSTEM

The Power Distribution System is shown in detail on the contract plans and various shop drawings. Refer to Table III-ST-BTB-1 - Belt Thickener Building - Facility Equipment Summary for contract plan and shop drawing numbers which pertain to the power distribution system.

III-ST-FBST - FLOATING BIOLOGICAL SOLIDS (FBS) THICKENER FACILITY (070)

A. GENERAL

The Floating Biological Solids(FBS) Thickener Facility includes the following equipment:

- Scum Equalization Pumps
- Scum Transfer Pumps
- Sump Pumps
- Top Sludge Collectors
- Bottom Sludge Collectors
- Tank Influent Meters
- Thickened Scum Meters
- Sampling System
- Heating, Ventilating and Air Conditioning Equipment

The FBS Thickener Facility, formerly known as the Dissolved Air Flotation Thickeners, is located southwest of the existing Sludge Thickening Tanks and east of the Belt Thickener Building. The facility was converted from the DAF process to a gravity thickening process in order to simplify operations and maintenance and provide a separate location for the thickening of floated solids removed from the Final Sedimentation Tanks.

The FBS is skimmed from the surface of the Final Sedimentation Tanks and is commonly called "scum". Certain biological solids formed in the HPO Reactors and Diffused Air Reactors do not settle so that they can be removed with the return sludge and must be skimmed from the surface. The purpose of the FBS Thickener Facility is to remove water from the solids to reduce volume. The thickened FBS can then be added to the waste activated sludge prior to sludge thickening operations or can be combined with the thickened sludge prior to digestion.

FBS pumps are located at the Main Pumping Station to serve Final Sedimentation Tanks No. 1 - 12 and are located at the FBS Pumping Station to serve Final Sedimentation Tanks No. 13 - 20. These pumps are activated based on wet well level. The skimmings from the Final Sedimentation Tanks enters these wet wells based on cycle timers. Therefore, at any one time, there could be flow to the FBS Thickener Facility from either pumping station, both pumping stations, or there could be no flow at all.

The thickened FBS can be pumped to the influent of the Belt Thickener Building of Sludge Thickening Tanks for further thickening along with the waste activated sludge. The thickened FBS can also be pumped to the Mixed Sludge Pumping Station. The underflow(the water removed from the process) drains by gravity to the Primary Sedimentation Tanks Nos. 1 - 4 or Junction Chamber No. 2.

There are three rectangular concrete FBS Thickener Facility(FBS) Tanks, Nos. 1, 2 and 3. The control building is attached to the north end of the tanks. The FBS Tanks are each 64.7 feet long by 21.0 feet wide and 10.75 feet deep. The FBS flow can be sent to FBS Tank No. 1, which then serves as an equalization tank for FBS Tanks Nos. 2 and 3, or the flow can be directed to any of the three FBS tanks.

Refer to Table III-ST-FBS-1, FBS Thickener Facility - Facility Equipment Summary, for control numbers, manufacturer's names, equipment capacities, operation, maintenance, and contract plan and shop drawing

references. Refer to the Contractor's O & M Manual for manufacturer's Service Manuals pertaining to equipment installed in these facilities.

Figures III-ST-FBS-1 and III-ST-FBS-2 provide schematic diagrams of the FBS Thickener Facility and associated piping.

B. SCUM EQUALIZATION PUMPS: NOS. 1, 2, AND 3

(1) DESCRIPTION

Scum(FBS) is fed to the FBS Thickener Facility from the Main Pumping Station and Final Sedimentation Tanks. There is a 14 inch diameter feed line into the building.

The Scum Equalization Pumps are used to pump flow from Tank No. 1 to Tanks Nos. 2 and 3. The scum equalization equipment consists of three pumps, designated SFE-1, -2, and -3 together with controls and associated piping and valves. These pumps are housed in the Control Building and are shown diagramatically on Figure III-ST-FBS-2.

Each scum equalization pump is an end suction, top discharge, non-clog vortex-type pump driven through a variable speed drive by a 15 HP motor. Each scum equalization pump has a rated capacity of 440 gpm at 40 feet of TDH at maximum speed. Each scum equalization pump is furnished with a flow indicator controller, HAND-OFF-AUTO switch, signal switch, and run indicator lamp, all of which are located in the Control Console in the Control Building (070). Alarms, relay logic and alarm annunciators are located in the control cabinet adjacent to the control console.

(2) NORMAL OPERATION

Under normal operation, FBS Tank No. 1 will receive all scum feed. The scum equalization pumps will then provide continuous flow to FBS Tanks Nos. 2 and 3. Any combination of two pumps can operate simultaneously. Tank No. 1 is equipped with a bubbler level controller. The bubbler system is used to vary scum equalization pump speed based upon the liquid level in the tank. One pump will operate at maximum speed before the second pump is placed in service. The first pump will remain at full speed while the second pump speed will increase as needed.

(3) START-UP AND SHUTDOWN PROCEDURES

To start up and shut down the scum equalization pumps, use the manufacturer recommendations along with the following procedures:

a. START-UP:

- Make sure FBS Tank No. 1 is filled with liquid to the normal operating level. If the tank is empty, it must be filled with plant effluent prior to feeding sludge.
- When the FBS Tank No. 1 is filled to the operating level, make sure that all other FBS equipment, such as the top and bottom sludge collecting mechanisms and associated valves are in proper operating mode.
- Make sure the level control system is functional and adjusted.
- Set the tank level controller.

- Make sure the selector switches are on for the pumps to be put in service.
- Make sure the circuit breakers for the appropriate scum equalization pumps are closed at MCC-42 and/or 43.
- Open the suction and discharge valves on the pumps to be placed in service.
- Make sure the local disconnects for the pumps to be put in service are closed.
- Make sure the pumps to be placed in service are mechanically ready per manufacturer recommendations.
- Place the HAND-OFF-AUTO switch in the AUTO position for those pumps being put in service and make sure the corresponding run lamps are illuminated.

b. SHUTDOWN

- Turn the H-O-A switch in the Control Building to the OFF position for each pump to be shut down.
- Close the suction and discharge valves on the pumps to be shut down.
- If maintenance is to be performed, open the local disconnect.

NOTE

If maintenance is to be performed on the pumps open the circuit breaker in the combination starter/circuit breaker cabinet. Follow approved **Lockout/Tagout** procedures (See Chapter VI, Safety).

- Dilution water can be used to flush the pumps by leaving the dilution water valve and the pump isolation valves open for a short period after shutdown.

(4) ALTERNATIVE OPERATION

The scum equalization pumps in operation may be changed by opening and closing the appropriate suction and discharge isolation valves in conjunction with the start-up and shutdown procedures outlined above.

Another alternate mode of operation would feed multiple tanks simultaneously, bypassing the equalization process.

(5) MONITORS AND ALARMS

Each scum equalization pump is provided with a run lamp in the control console which illuminates during pump operation.

Each scum equalization pump is provided with a limit switch on the discharge check valve which acts as a pump failure indicator. If a scum equalization pump is activated and the check valve does not open, a pump failure alarm is annunciated in the control cabinet adjacent to the control console. A time delay is provided which will time out before the alarm signal is initiated. A pushbutton alarm reset is provided in the control console.

The tank level is measured by a bubbler system and is indicated in the control console. High level and low level alarms are supplied which annunciate alarms in the control cabinet.

C. SCUM TRANSFER PUMPS: NOS. 1 AND 2

(1) DESCRIPTION

Thickened scum from the FBS tanks is pumped by the Scum Transfer Pumps to the Belt Thickener Building, Sludge Thickening Tanks or Mixed Sludge Pumping Station. Thickened sludge is drawn into the suction header of the scum transfer pumps from the thickened scum wells and bottom sludge collectors.

The scum transfer pump equipment consists of two pumps, piping, valves and controls. These pumps are located in the Control Building. Each scum transfer pump is a side mounted, belt driven pump. Each pump is driven by a 30 HP variable speed drive motor.

Controls for the thickened sludge pumps are located in the control console in the Control Building. Controls consist of H-O-A switches, flow adjusters, run indication lamps, pump selector switches and pump failure reset pushbuttons. Alarms are located in the control cabinet adjacent to the control console.

(2) NORMAL OPERATION

Under normal operation, one scum transfer pump can serve any of the three FBS tanks. The thickened scum should be pumped intermittently due to low volumes. The pumps start automatically start and stop by timers located in the control cabinet. Variable speed drives will control the pump discharge rate since the pumps, which were relocated from the Main Pumping Station, are oversized for this facility. The pump timings and speeds are determined by operators based upon experience in the facility.

(3) START-UP AND SHUTDOWN PROCEDURES

To start up and shut down thickened sludge pumping equipment use the following procedures:

a. START-UP:

- Make sure the circuit breakers for each scum pump are closed.
- Open the suction and discharge isolation valves for the pump being put into operation.
- Place the selector switch on the pump to be operated.
- Make sure the pump is mechanically ready in accordance with manufacturer recommendations.
- Make sure all upstream and downstream valves are in the proper position.
- Make sure there is liquid in the bottom sludge collector or thickened scum well.

b. SHUTDOWN:

- Turn the H-O-A switch to the OFF position.
- Close the suction and discharge isolation valves.
- Open the local disconnect if maintenance is to be performed.

NOTE

If maintenance is to be performed on the pumps open the circuit breaker in the combination starter/circuit breaker cabinet. Follow approved **Lockout/Tagout** procedures (See Chapter VI, Safety).

(4) MONITORS AND ALARMS

Each scum transfer pump is furnished with H-O-A switches, potentiometers, run indication lamps, alarms with lockouts and reset pushbuttons, test pushbuttons and time clocks. The monitors and alarms are located in the control cabinet adjacent to the control console in the Control Building.

Flow meters FE-4 and FE-5 are located on the thickened sludge pump discharge header. A flow recorder and totalizer are provided in the control console.

D. SUMP PUMPS: NOS. 1 AND 2

(1) DESCRIPTION

Two 7.5 horsepower sump pumps are provided to pump floor drainage from the Control Building. The pumps and controls are housed in the Control Building. The pumps discharge to the Tank Drain line.

E. TOP SLUDGE COLLECTORS: NOS. 1,2, AND 3

(1) DESCRIPTION

The thickened, floating FBS in the FBS tanks is skimmed by the top sludge collectors. The skimmed FBS is periodically pumped from the thickened sludge wells by the Scum Transfer Pumps.

The top sludge collection equipment for each tank consists of a series of scraper flights carried by two chains running above the liquid surface in the tanks and over two sets of sprockets. The flights convey sludge towards the north end of the tanks and scrape this conveyed sludge over the dewatering beach plate into the thickened sludge well. Each top sludge collector is driven through a variable speed drive mechanism by a 2 HP motor. Collector speed is adjustable from 2 to 8 feet per minute.

The top sludge collection equipment in each tank is all steel construction and has a capacity for collecting 736 pounds of sludge with a four percent solids concentration per hour.

Controls for the top sludge collectors are located in the control cabinet in the Control Building. The controls consist of H-O-A switches, run indication lamps, over torque alarms with lockouts and reset pushbuttons, test pushbuttons and time clocks.

(2) NORMAL OPERATION

Under normal operating conditions the H-O-A switch should be in the AUTO position. In the AUTO position, the top sludge collector will operate based upon the corresponding timer setting. The minimum timer cycle rate is 30 minutes; 15 minutes on and 15 minutes off. The desired cycle time and collector speed should by adjusted by the operator to optimize thickener performance.

(3) START-UP AND SHUTDOWN PROCEDURES

Follow the procedure described below to start up and shut down the top sludge collection equipment.

a. START-UP:

- Make sure the circuit breakers are closed at the MCC
- Make sure the local disconnect is closed.
- Make sure the tank is free of all obstructions.
- Make sure each unit is mechanically ready in accordance with manufacturer recommendations.
- Press the test pushbutton to energize the system and adjust the collector to the desired speed.
- Set the timer to the desired setting.
- Place the H-O-A switch in the AUTO position.
- Make sure the appropriate run indication lamps are illuminated.

b. SHUTDOWN:

- Place the H-O-A switch in the OFF position.
- Open the local disconnect.

NOTE

If maintenance is to be performed on the collectors open the circuit breaker in the combination starter/circuit breaker cabinet. Follow approved **Lockout/Tagout** procedures (See Chapter VI, Safety).

(4) ALTERNATE OPERATION

Each top sludge collector may be operated manually by placing the H-O-A switch in the HAND position. This is only recommended with complete operator observation for maintenance purposes.

(5) MONITORS AND ALARMS

Each top sludge collector is equipped with a run indication lamp which is located in the control cabinet adjacent to the control console in the Control Building.

Over torque alarms are annunciated after a time delay, in the control cabinet if an over torque condition occurs. A pushbutton reset must be pushed to reset an over torque condition.

F. BOTTOM SLUDGE COLLECTORS: NOS. 1, 2, AND 3

(1) DESCRIPTION

In the FBS tanks, some sludge particles settle and collect at the bottom of the tank. This settled sludge is collected by the bottom sludge collector equipment provided in each thickener tank. The collected sludge is removed by the Scum Transfer Pumps.

The bottom sludge collector equipment provided in each FBS tank consists of a three-shaft conveyor-type chain and scraper collector with return tracks and floor rails. The scrapers move the bottom sludge to

sludge hoppers at the north end of each thickener tank. Each bottom sludge collector is driven by a 2 HP motor. Collector speed is approximately one foot per minute.

The bottom sludge collector chains are made from non-metallic materials. The scrapers are constructed of fiberglass and provided with polyurethane wearing shoes to run on the floor rails and the return tracks.

Controls for the bottom sludge collectors are located in the control cabinet in the Control Building. The controls consist of H-O-A switches, run indication lamps, over torque alarms with lockouts and reset pushbuttons, test pushbuttons and time clocks.

(2) NORMAL OPERATION

The H-O-A switch should be in the AUTO position. In the AUTO position, the bottom sludge collector will operate based upon the corresponding timer setting. The minimum timer cycle rate is 30 minutes; 15 minutes on and 15 minutes off. The desired cycle time should be adjusted by the operator to optimize thickener performance.

(3) START-UP AND SHUTDOWN PROCEDURES

To start up and shut down the bottom sludge collection equipment, use the following procedure.

a. START-UP:

- Make sure the circuit breakers are closed at the MCC.
- Make sure the local disconnect is closed.
- Make sure the tank is free of all obstructions.
- Make sure each unit is mechanically ready in accordance with manufacturer recommendations.
- Set the timer to the desired setting.
- Place the H-O-A switch in the AUTO position.
- Make sure the appropriate run indication lamps are illuminated.

b. SHUTDOWN:

- Place the H-O-A switch in the OFF position.
- Open the local disconnect.

NOTE

If maintenance is to be performed on the collectors open the circuit breaker in the combination starter/circuit breaker cabinet. Follow approved **Lockout/Tagout** procedures (See Chapter VI, Safety).

(4) ALTERNATE OPERATION

Each bottom sludge collector may be operated manually by placing the H-O-A switch in the HAND position. This is only recommended with complete operator observation for maintenance purposes.

(5) MONITORS AND ALARMS

Each bottom sludge collector is equipped with a run indication lamp which is located in the control cabinet adjacent to the control console in the Control Building.

Over torque alarms are annunciated after a time delay, in the control cabinet if an over torque condition occurs. A pushbutton reset must be pushed to reset an over torque condition.

G. TANK INFLUENT METERS: FE 1, 2 AND 3

(1) DESCRIPTION

Flow meters FE-1, FE-2, and FE-3 are located on the FBS tank influent lines to measure the flow going into each tank. A signal from each meter is transmitted to the control console in the Control Building where the flow is recorded and totalized.

H. THICKENED SCUM METERS: FE 4 AND 5

(1) DESCRIPTION

Flow meters FE-4 and FE-5 are located on the thickened sludge discharge lines. A signal from each meter is transmitted to the control console in the Control Building where the flow is recorded and totalized.

I. SEAL WATER BOOSTER PUMPS: NOS. 1 AND 2

The Seal Water Booster Pumps were originally provided to boost the pressure of effluent water which was used as seal water for pressurization pumps. The pressurization pumps which have been removed from this facility and it is not anticipated that the Seal Water Booster Pumps will be used.

J. HEATING, VENTILATION AND AIR CONDITIONING EQUIPMENT

(1) DESCRIPTION

a. The ventilation system consists of exhaust fan EF-6 for the toilet area and E-7 and E-8 for the remainder of the ventilated area. The control room is cooled or heated by a roof top air conditioning unit AC-1.

(2) NORMAL OPERATION

a. START-UP:

1. Exhaust fans EF-7 and EF-8 are powered from MCC-42 and 43. A HAND-OFF-AUTOMATIC switch is located MCC-42 and 43 for each fan. With the selector switch placed in the automatic position, fans EF-7 and EF-8 are each energized through their respective thermostat. The thermostat should be set at approximately 85°F. When the space temperature is below 85°F the fans will be off; when the space temperature is above 85°F, the fans will be energized. With the selector switch in the hand position, the thermostats will be over-ridden and the fans will run continuously.
2. AC-1 is powered from PNL "A" with an ON/OFF switch. When the switch is placed in the ON position, the AC unit is energized through its controls. Continued operation will be dependent on a heat-cool thermostat. The cooling cycle should be controlled at approximately 78°F, and heating controlled at approximately 68°F. The cooling is supplied

from a standard direct expansion air cooled system and the heating is supplied by an electric strip heater.

b. SHUTDOWN:

1. Fans EF-7 and EF-8 are stopped by placing their respective selector switch in MCC-42 and 43 in the OFF position.
2. AC-1 is stopped by placing the switch for AC-1 in PNL "A" in the OFF position.

NOTE

If maintenance is to be performed on the air conditioner open the circuit breaker in the combination starter/circuit breaker cabinet. Follow approved **Lockout/Tagout** procedures (See Chapter VI, Safety).

K. POWER DISTRIBUTION SYSTEM

(1) DESCRIPTION

The power distribution system is shown in detail on the contract plans and various shop drawings. Refer to Table III-ST-FBS-1, Sludge Thickener Facility - Facility Equipment Summary, for contract plan and shop drawing number which pertain to the power distribution system.

(2) NORMAL OPERATION

Electricity is provided from two independent 277/480 volt, 3 phase, 4 wire grounded wye circuits. Each circuit is protected by a normally closed air circuit breaker located in the Control Building. One feeder is connected to CC 51 and the second is connected to MCC 53. Each breaker is individually mounted in it's own housing and connected by cable to the buss of the respective MCC. Each breaker is 3 pole, 600 ampere frame with 600 ampere trip. The feeder extends in underground conduits to MCC 42 and MCC 43 via MH #9. The 3 pole, 600 ampere frame, 600 ampere trip tie breaker is open for normal operation. All other breakers are closed.

(3) START-UP AND SHUTDOWN PROCEDURES

It is generally recommended that if electrical power is not available as indicated on the voltmeters in MCC 42 and MCC 43 that the main breakers and all motor circuit protectors be opened. Verify that power is available in the Control Building and the two feeder breakers in that building are closed. Once power is restored as indicated on the voltmeter of the MCC, close the main breakers.

Recommended closed sequence is as follows:

a. SWITCHBOARD MCC-42

1. Close breaker to power panel DBI. This should energize the 45 KVA dry type transformer and provide lighting in the building.
2. Leave the tie breaker open.
3. Close motor circuit protector to the pressurization pump.

4. Close remaining motor circuit protector and breakers until MCC is fully activated.

b. SWITCHBOARD MCC-43

1. Close motor circuit protectors to the pressurization pumps.
2. Close remaining motor circuit protectors and breakers until MCC is fully activated.

(4) SHUTDOWN

To shut the electrical system down it is recommended the procedures be as follows:

a. SWITCHBOARD MCC-43

1. Open all motor circuit protectors and breakers leaving the pressurization pumps until last.
2. Open the main breaker.

b. SWITCHBOARD MCC-42

1. Open all circuit protectors and breakers except the pressurization pumps and the breaker to Panel DBI.
2. Open motor circuit protector for the pressurization pumps.
3. Open the breaker to Panel DBI. This will turn off all the lights and equipment.
4. Open main breaker.

(5) ALTERNATE OPERATION

In order to maintain feeder 51M2C or 51M3A or either breaker in the Control Building the power should be removed from the element. However, the system is designed so that approximately one-half or that load can be transferred to the other feeder system by use of the tie breaker. In order to activate this provision, the load on the MCC should be removed, open the main breaker, remove the kirk key of the main breaker key system and put it in the tie breaker key-interlock of MCC 42. Turn the key and then close the tie breaker restoring power to the MCC on which you had just opened the main breaker. Now, continue reconnecting load back on the line until the load on the ammeter indicates approximately 2/3 of the plant under this condition. Loads that are not critical can be manually turned off or manually switched on-off as necessary for plant function.

CHAPTER IV
LABORATORY CONTROL

IV-LC-IN INTRODUCTION

A. GENERAL

The purpose of the laboratory control program is to ensure that the performance of the treatment plant satisfies standards set by various regulatory agencies and to provide the basis for process control. All laboratory tests are performed at the Howard F. Curren Analytical Laboratory located at 2700 Maritime Boulevard, Tampa, Florida 33605. In addition to providing data for the 96 mgd AWT Plant, the laboratory also performs analyses for the following:

- Industrial Waste Section
- Storm Water Runoff Program
- Pilot Plant Studies
- Quality Control for Chemicals Used at Treatment Facilities
- Possible Pathogenic Properties of Wastewater Spills, Overflows, and Possible Cross Connections
- Bay Studies Group

The laboratory is equipped to perform all routine tests concerned with Wastewater Treatment Plant monitoring and process control. The laboratory also has additional equipment that supplements these routine analyses. The additional equipment consists of the following:

- Total Organic Carbon Analyzer
- Acetylene Analyzer
- Technicon Autoanalyzer
- Gas Chromatograph
- Inductively Coupled Plasma
- Atomic Absorption Spectrophotometer
- 2-Gas Chromatograph/Mass Spectrophotometers

B. WATER QUALITY STANDARDS

The Treatment Plant must comply with standards stipulated in NPDES Permit N. FL0020940, and Chapters 62-600 of the Florida Administrative Code (see Chapter II, Process Description).

It is apparent that at times certain standards and regulations listed in the above documents may have conflicting viewpoints. In this case, it is the intent of the City of Tampa to adhere to the more stringent standard or regulation.

C. REFERENCES

The library of references for the laboratory should contain but not be limited to the following publications:

- "Standard Methods for the Examination of Water and Wastewater", APHA-AWWA-WPCF, 18th Edition, 1992
- "Methods for Chemical Analysis of Water and Wastes, EPA-600/4-79-200, Revised March 1983
- WEF Manual of Practice No. 11, "Operation of Wastewater Treatment Plants"

- "Handbook of Chemistry & Physics", CRC Press, 57th Edition, 1977
- "Dangerous Properties of Industrial Materials", Von Nostrand Reinhold, 4th Edition 1975
- "Bergy's Manual of Determinative Bacteriology", Williams & Wilkins
- "Handbook for Analytical Quality Control in Water & Wastewater Laboratories", EPA-600/4-79-019, March 1979
- "Handbook for Laboratory Safety", CRC Press, 2nd Edition, 1971
- "Control of Pathogens and Vector Attraction in Sewage Sludge", EPA Publications 625/R-92/013, December 1992
- "Aerobic Biological Wastewater Treatment Facilities", Process Control Manual, USEPA 430/9-77-006
- "Test Methods for Evaluation Solid Waste, Physical/Chemical Methods", SW-846, 3rd Edition, 1986 as amended by Final Update II, September 1994.
- "POTW Sludge Sampling and Analysis Guidance Document." USEPA, August 1989
- "Methods of Soil Analysis", Agronomy Monograph Number 9, page 900, C.A. Black, Ed. American Society of Agronomy, Madison, Wisconsin, 1965
- "40 CFR Part 136", Guidelines Establishing Test Procedures for the Analysis of Pollutants Under the Clean Water Act, Appendix A, as published in the Federal Register, July 1, 1992
- "Methods for the Determination of Metals in Environmental Samples", EPA 600/4-91/010, June 1991
- "Methods for the Determination of Metals in Environmental Samples", Supplement I, EPA 600/R-94/111, May 1994
- "Official Methods of Analysis of the Association of Official Analytical Chemists", AOAC, 14th Edition, 1984
- "Standard Operating Procedures for Laboratory Operations and Sample Collection Activities", FDEP-QA-001/92, September 1992
- "DEP Manual for Preparing Quality Assurance Plans", FDEP-QA-001/90, September 1992
- "Anaerobic Sludge Digestion", MO-11, EPA 430/9-76-001
- "A Plain English Guide to the EPA Part 503 Biosolids Rule", EPA/832/R-93/003

IV-LC-PM PROCESS MONITORING

A. GENERAL

Sampling stations, on-line analyzers, and probes are located throughout the treatment plant to ensure the efficiency of the overall operation.

It should be emphasized that an efficient operation is significantly dependent upon obtaining representative samples from the treatment process. All samples shall be collected and analyzed in accordance with Chapter 62-160, FAC and the City of Tampa, Howard F. Curren Advanced Wastewater Treatment Plant laboratory's CompQAP #870145.

B. DAILY ON-SITE RECORDINGS

Each day the following parameters should be recorded and logged into the plant SCADA System:

- Average temperature
- Predominant windspeed and direction

- Total rainfall
- Total grit
- Total rags

C. INTERPRETATION OF ANALYSES

It is important that the individual tests used to monitor the wastewater treatment process be understood. The following is a list of tests which are routinely performed at the treatment plant and how they apply to the process:

- **Alkalinity**

  The alkalinity of water is its capacity to neutralize a strong acid to a designated pH. Alkalinity is thus determined by titration with a standard acid to some fixed pH end point. Alkalinity is important in the control of treatment processes and digesters. It can also be used as an indicator for the application of some chemicals. Alkalinity is expressed in terms of ppm as Calcium Carbonate ($CaCo_3$)

- **Ammonia (NH_3-N)**

  Ammonia nitrogen is determined by the distillation method. This method is based upon the fact that when the steam is condensed from a boiling sample held above pH 7, the ammonia present in the sample will be absorbed in the condensate. The amount of ammonia in the condensate is then determined by absorbing with boric acid and titrating with a strong acid. Determination of ammonia nitrogen is also important in determining nitrogen loadings, conversions and removal efficiencies. Ammonia is expressed in terms of ppm

- **Biochemical Oxygen Demand (BOD)**

  The BOD test is used to determine the oxygen required to biologically stabilize the organic matter present in the wastewater. It is the principal test to determine the strength, in terms of oxygen required, of the wastewater. It is widely used to evaluate the efficiency of various treatment processes and to estimate the effects of pollution on receiving waters. BOD test results areusually reported in milligrams per liter (mg/l) or parts per million (ppm) of oxygen consumed at the end of a five-day test period. These results are referred to as the 5-day BOD (BOD_5) and should not be confused with the ultimate BOD of the sample

- **Carbonaceous Biochemical Oxygen Demand (CBOD)**

  Oxidation of reduced forms of nitrogen, such as ammonia and organic nitrogen can exert a nitrogenous demand. The interference for nitrogenous demand can be prevented by an inhibitory chemical. If an inhibiting chemical is used, the oxygen demand measured is the carbonaceous BOD ($CBOD_5$) and referred to as the 5-day CBOD

- **Chemical Oxygen Demand (COD)**

  The COD test is based upon the fact that practically all organic compounds can be oxidized by the action of strong oxidizing agents under acid conditions. During the test, organic matter is converted to CO_2 and water regardless of the biological assimilability of the substance. As a result, COD values can be much greater than BOD values if large amounts of biologically resistant organic matter are

present. The test is widely used in the operation of industrial treatment facilities because of the speed with which results can be obtained. It is also used to estimate the effects of pollution on receiving waters. COD test results are reported in terms of ppm

- **Chlorine Residual**
  Cl_2 residual is the chlorine remaining in wastewater at the end of a specified contact period and test results are reported in terms of ppm. It is used to determine if desired disinfection objectives are met

- **Coliform Bacteria**
  Coliform bacteria is determined by the membrane filter-direct count technique. A known volume of water sample is passed through a membrane filter with very small pore size. The bacteria retained on the filter are cultured and incubated on a pad saturated with broth. After incubation, the colonies can be counted under a magnifier. Positive results must be verified by the MPN method as explained in Standard Methods. Coliform, especially fecal coliform, is an indicator of the pathogens present in a wastewater. Coliform is expressed in terms of organisms per 100 ml

- **Dissolved Oxygen**
  Dissolved oxygen represents the amount of oxygen in solution in a liquid. The solubility of oxygen in fresh water ranges from 14.6 mg/l at 0 degrees C to about 7 mg/l at 35 degrees C. The solubility of oxygen is at a minimum when temperatures are high. In wastewater testing, dissolved oxygen measurements are used to monitor aerobic conditions in receiving streams and in controlling aerobic treatment processes

- **Methanol**
  Methanol is determined by gas chromatograph methods and is used to determine the concentration of the organic carbon used in the denitrification process. Concentrations exceeding 0.5 mg/l in the plant effluent may result n elevated CBOD'S

- **Nitrate (NO_3-N) and Nitrite (NO_2-N)**
  Nitrates are determined by the colorimetric, automated, cadmium reduction method. When run through a column containing amalgamated cadmium filings, nitrate is reduced almost quantitatively to nitrite. The nitrite is then determined colorimetrically with a reagent of 1-naphthylamine dihydrochloride. Nitrates and nitrites are also important in determining nitrogen loadings, conversions and removal efficiencies. More specifically, nitrates at the influent and nitrates at the effluent of the nitrification process can be used to determine the efficiency of the nitrification portion of the process. The effluent of the denitrification process should also be tested for this parameter. Nitrates and nitrites are expressed in terms of ppm

- **Orthophosphate (PO_4-P) and Total P**
  Orthophosphate is determined by colorimetric methods using a reagent of adomolybdic acid. The molybdenum produces a blue colored solution that is proportional to the amount of phosphate present. Total P is found by applying the foregoing technique to a digested sample. Determination of

phosphate is important in assessing the affect of phosphorus as a nutrient on receiving water. Orthophosphate can be used to determine chemical feed rate for phosphorus removal. Orthophosphate is expressed in terms of ppm

- **pH**

  pH is a term used to express the intensity of the acid or alkaline conditions of a solution. The pH scale is usually represented as ranging from 0 to 14, with pH 7 representing absolute neutrality. Acid conditions increase as pH values decrease, and alkaline conditions increase as the pH values increase. In the activated sludge process it is important to monitor the pH to insure that it is within a compatible range for microorganisms needed for treatment and digestion

- **Settleable Solids**

  The term "settleable solids" is applied to solids in suspension that will settle, under quiescent conditions, resulting from the influence of gravity. This test is an indication of the volume of solids removed by sedimentation. It is used with activated sludge mixed liquor suspended solids (MLSS) testing in determining the sludge density index (SDI). This index is an important part of activated sludge processes control. Test results are measured and reported in term of ml/l of settleable solids

- **Suspended Solids**

  The undissolved substances in wastewater are usually referred to as suspended solids. It is a major parameter in evaluating wastewater strength and in determining the efficiency of treatment processes. It is also used to estimate the effects of pollution receiving waters. Suspended solids tests results are reported in terms of ppm

- **TKN (Total Kjeldahl Nitrogen)**

  TKN is the amount of nitrogen present as determined by the Kjeldahl method. Most organic compounds containing nitrogen are derivatives of ammonia, and destruction of the organic portion of the molecule by oxidation frees the nitrogen as ammonia. The Kjeldahl method employs sulfuric acid as the oxidizing agent and a catalyst to hasten oxidation of more resistant organic materials. TKN is especially useful in determining nitrogen loadings conversions and removal efficiencies. TKN is expressed in terms of ppm

- **Total Organic Carbon (TOC)**

  TOC is especially applicable to small concentrations of organic matter. The test is performed by injecting a known quantity of sample into a high-temperature furnace. The organic carbon is oxidized to carbon dioxide in the presence of a catalyst. The carbon dioxide that is produced is quantitatively measured by means of an infrared analyzer. Acidification and aeration of the sample prior to analysis eliminates errors due to the presence of inorganic carbon. The test can be preformed very rapidly compared to other analysis. Certain resistant organic compounds may not be oxidized, however, and the measured TOC value will be slightly less than the actual amount present in the sample. The TOC is especially useful in controlling carbon feed to denitrification filters. It is also a general indicator

of the strength of a waste and is a quick method for determining treatment efficiency. TOC is expressed in terms of ppm

- **Total solids**
  Analytically, the total solids of a wastewater is defined as all the matter that remains as residue upon evaporation at 103 to 105 degrees C. Total solids are determined by the differential weight before and after evaporation. Total solids content is an indicator of the strength of a waste and is expressed in terms of ppm.

- **Volatile Acids**
  Volatile acids are formed during the anaerobic degradation of carbohydrates, proteins, and fats. The test is valuable in the routine control of anaerobic digestion units. The volatile acid content of digesting sludges usually is in the range of 50 to 250 ppm expressed as acetic acid

- **Volatile Solids**
  The volatile solids is a measure of the organic matter present in a waste and is defined as that fraction of the total solids which will oxidize and be driven off as gas at 600 degrees C. Quantity is determined by differential weight before and after combustion. The volatile solids test is used as an indicator of how efficiently the treatment process biologically degrades organic pollutants. In the activated sludge mixed liquor volatile suspended solids (MLVSS) it is an indicator of organic matter present. The MLVSS is used in the process to determine such things as air supplied, sludge return rate and sludge wasting.

D. SAMPLING

It is important to understand the defmitions of composite and grab sampling.

- **Composite Sampling** - According to Chapter 62-601 (Domestic Wastewater Treatment Plant Monitoring), a flow proportioned composite sample shall consist of samples collected at hourly intervals. The volume of each individual sample which is used to form the composite shall be proportioned to the flow at the time of collection

- **Grab Sampling** - A grab sample is a single sample taken at neither set time nor proportioned to flow Sample bottles containing composite samples should be removed from their individual storage compartments every twenty-four hours and placed in the main storage refrigerator located at the north end of the main pump station and the refrigerator in the Filter Building. Composite samples are taken from midnight to midnight.

  It is the intent of this section of the chapter to identify each sampling station, analyzer, and probe according to location. Locations containing these units are as follows:
  - Junction Chamber No. 1 (Influent)
  - Screen and Grit Facilities
  - Primary Settling Tanks
  - Primary Raw Sludge Pump Station

- Anaerobic Digesters
- West Drying Beds
- Main Pumping Station
- Oxygen Generation Equipment
- Reactors
- Return Sludge Pumping Stations
- Intermediate Pumping Station
- Nitrification Pumping Station
- Dissolved Air Reactors
- Final Sedimentation Tanks
- Filter Building
- Post Aeration-Chlorination Tanks
- Belt Thickening Facility
- East Drying Beds
- Belt Press Facility
- Sludge Heat Drying
- Receiving Water

A summary of sampling and testing to be performed at each of these locations is placed in the following order:

- Types of samples and sampling equipment
- Analyses to be performed
- Types of analyzers at each location
- Types of probes at each location

(1) JUNCTION CHAMBER NO. 1

- Types of samples and sampling equipment: Composite sample collected by flow proportioning manual samples every 2 hours
- Analyses to be Performed:
  - Biochemical Oxygen Demand
  - Carbonaceous Biochemical Oxygen Demand
  - Suspended Solids
  - Total Kjeldahl Nitrogen
  - Total Phosphorus and Orthophosphate
  - Alkalinity
  - pH
- Types of Analyzers:
  - Ozone Concentration Analyzer
  - Oxygen Purity Analyzer
- Types of Probes:
  - There are no probes at this location

(2) SCREEN AND GRIT FACILITIES

- There are no samples routinely taken at this location

(3) PRIMARY SETTLING TANKS

- There are no samples routinely taken at this location
- There are no automatic analyzers at this location
- Types of Probes:
  - Sludge Blanket Level - A manual probe is used to record sludge blanket levels

(4) PRIMARY RAW SLUDGE PUMP STATION

- Types of samples and sampling equipment: Composite sample - A composite raw sludge sample is taken manually (old and new primary tank raw sludge sample is blended into one sample in the laboratory)
- Analyses to be Performed:
  - pH
  - Total Solids (expressed as a percent)
  - Volatile Solids (expressed as a percent)
- There are no automatic analyzers or probes at this location

(5) ANAEROBIC DIGESTERS

- Types of samples and sampling equipment: Grab sample - A grab sample of supernatant is collected manually
- Analyses to be Performed:
  - pH
  - Volatile Acids
  - Alkalinity
  - Total Solids (expressed as percent)
  - Volatile Solids (expressed as percent)
- There are no analyzers or probes at this location.

(6) WEST DRYING BEDS

- There are no samples routinely taken at this location.

(7) MAIN PUMPING STATION

- Types of samples and sampling equipment: Composite sample - A composite sample is taken by an automatic sampler
- Analyses to be Performed:
  Biochemical Oxygen Demand
  - Suspended Solids
  - Total Nitrogen
- Types of Analyzers:

- There are no analyzers at this location.
- There are no probes at this location.

(8) OXYGEN GENERATION EQUIPMENT

- Types of samples and sampling equipment: Grab sample - A grab sample of liquid oxygen is collected manually
  - Analyses to be Performed:
  - Oxygen Purity
  - Acetylene
- Types of Analyzers:
  - Oxygen Purity Analyzers
  - Hydrocarbon Analyzer
- There are no probes at this location.

(9) REACTORS

- Types of samples and sampling equipment: Grab sample - A grab sample of mixed liquor is collected manually
- Analyses to be Performed:
  - DO
  - MLSS
  - Volatile Solids
  - Settleable Solids
  - pH
  - Nitrate (NO_3-N)
  - Ammonia (NH_3-N)
- Types of Analyzers:
  - Oxygen Purity Analyzer
  - Dissolved Oxygen Meters
  - Hydrocarbon Analyzer
- Types of Probes:
  - DO probes

(10) RETURN SLUDGE PUMPING STATIONS

- Types of samples and sampling equipment: Grab sample - A grab sample of return/waste sludge is collected manually
- Analyses to be Performed:
  - MLSS
  - Volatile Solids
- There are no analyzers or probes at this location

(11) INTERMEDIATE PUMPING STATION

- Types of samples and sampling equipment: Composite sample - A composite sample is taken by an automatic sampler
- Analyses to be Performed:
  - Biochemical Oxygen Demand
  - Suspended Solids
  - Total Nitrogen
- There are no analyzers or probes at this location

(12) NITRIFICATION PUMPING STATION

- Types of samples and sampling equipment: Composite sample is taken by automatic sampler
- Analysis Performed:
  - Biochemical Oxidation Demand
  - Suspended Solids
  - Ammonia (NH_3-N)
  - Nitrate (NO_3-N)
  - Total Kjeldahl Nitrogen
- There are no analyzers at this location

(13) DISSOLVED AIR REACTORS

- Types of samples and sampling equipment: A grab sample of mixed liquor is collected manually
- Analyses to be performed
  - DO
  - MLSS
  - Volatile Solids
  - pH
  - Nitrate (NO_3-N)
  - Ammonia (NH_3-N)

(14) FINAL SEDIMENTATION TANKS

- There are no specific samples taken at this location
- There are no analyses necessary at this location
- There are no analyzers at this location
- Types or Probes:
  - A manual probe is used to measure sludge blanket level

(15) FILTER BUILDING

- Types of samples and sampling equipment: Composite sample - Composite samples are taken by separate automatic samplers
  for the nitrified effluent, denitrified effluent, and final effluent

- Analyses to be Performed:
  - Biochemical Oxygen Demand
  - Carbonaceous Biochemical Oxygen Demand
  - Suspended Solids
  - Total Phosphorus
  - Orthophosphate
  - Alkalinity
  - Nitrate (NO_3-N)
  - Nitrite (NO_2-N)
  - Ammonia (NH_3-N)
  - TKN
  - Methanol
  - Total Organic Carbon
  - Dissolved Oxygen
- Types of Analyzers:
  - Nitrate Analyzer
  - Ammonia Analyzer
  - Turbidity
- There are no probes at this location

(16) POST AERATION-CHLORINATION TANKS/DECHLORINATION

- Types of samples and sampling equipment: Grab sample - A grab sample of effluent is collected manually
- Analyses to be Performed:
  - Fecal Coliform
  - pH
  - Chlorine Residual
  - Dissolved Oxygen
- Types of Probes:
  - Dissolved Oxygen Probes
  - pH Probes

(17) GRAVITY SLUDGE THICKENING TANKS

- Types of samples and sampling equipment: A composite sample is manually collected at this location
- Analyses to be Performed:
  - Total Solids
  - Volatile Solids
- Types of Analyzers:
  - There are no analyzers at this location
- Types of Probes
  - A manual probe is used to measure sludge blanket level

(18) BELT/THICKENING FACILITY

- Types of samples and sampling equipment: Composite samples are collected manually at this location
- Analyses to be Performed:
  - Total Solids
  - Volatile Solids
  - Filtrate Suspended Solids
- Type of Analyzers
  - None
- There are no probes at this location

(19) BELT PRESS FACILITY

- Types of Samples: A composite sample is manually collected at this facility
- Analyses to be performed:
  - Total Solids
  - Volatile Solids
  - Filtrate Suspended Solids
- Types of Analyzers
  - None
- Types of Probes
  - None

(20) SLUDGE HEAT DRYING

- Types of Samples: Composite samples are manually collected at this facility
- Analyses to be performed:
  - Total Solids
  - Total Nitrogen
  - Water Insoluble Nitrogen
- Types of Analyzers: A microwave solids analyzer is used for process analysis of sludge cake and dryer feed samples.
- Types of Probes: Temperature probes are used throughout the drying process and sludge storage silos

(21) EAST DRYING BEDS

- There are no samples taken, no analyses performed, no analyzers, and no probes at this location

(22) RECEIVING WATER SAMPLE

In addition to the treatment plant process sampling and testing, an on-going program for the sampling of receiving waters is conducted. At present, this program is directed toward an evaluation of water quality in Hillsborough Bay and its relationship to the plant effluent discharge.

- Types of samples and sampling equipment:
  Compliance Sampling - A grab sample using a Niskin bottle is collected at mid-depth from three stations in Hillsborough Bay on a monthly interval.

Primary Production Sampling - Grab samples using a Niskin bottle are collected from surface to three meters from two stations in Hillsborough Bay and from surface to five meters from one station in Middle Tampa Bay on a monthly interval.

- Analysis to be Performed for Compliance Sampling:
  - NH_3-N
  - TKN
  - NO_3-N
  - Total Phosphorus
  - PO_4-P
  - Biological Oxygen Demand (5 day)
  - Pigments
  - Turbidity
- Analysis to be Performed for Primary Production Sampling:
  - Primary Production
  - Pigments
  - NH_3-N
  - Turbidity
  - Inorganic Carbon
- Types of Analyzers:
  - There are no analyzers used in the field. Laboratory analyzers are used where needed
- Water Quality Parameters Recorded:
  - Dissolved Oxygen
  - pH
  - Temperature
  - Salinity
  - Depth
- Types of Probes:
  - Hydrolab Datasonde 3 Probe and Surveyor 3 Datalogger
  - YSI 600 XL Probe and 610 DM Datalogger
  - Licor 190 SA and 193 SA Light Sensors and 1000 Datalogger - Incident Light and Water Column Light Attenuation (Primary Production)
  - Secchi Disk - Transparency Probe

IV-LC-AC ANALYSIS OF PURCHASED CHEMICALS

A. GENERAL

Specifications have been established by the Department of Sanitary Sewers for the following chemicals:

- Liquid Cationic Polymer

- Sodium Hypochlorite 10%
- Sodium Hydroxide 50%
- Liquid Chlorine
- Methanol (Virgin and Reclaimed)
- Liquid oxygen
- Sulphur Dioxide

Quality control analyses should be performed at regular intervals, especially on those chemicals purchased in large quantities. Quality control analyses should be performed in accordance with procedures described in the American Water Works Standards, technical bulletins supplied by the manufacturer, or similar methods acceptable to the Division of Wastewater Treatment.

Anionic polymers used in the treatment process must be approved by the Wastewater Treatment Division and must perform similar to the product commonly referred to as NALCO-7763 (NALCO Chemical Company).

B. LIQUID CATIONIC POLYMER

The liquid cationic polymer is used to enhance solids settling in the advanced waste treatment process, and assist in the dewatering and thickening of anaerobic and secondary sludges. Typical dosages are as follows:

- Secondary gravity thickening.....20 to 40 lbs/dry ton sludge
- Secondary gravity/belt thickeners.....30 to 40 lbs/dry ton sludge
- Anaerobic sludge dewatering.....50 to 100 lbs/dry ton sludge

The cationic polymer should have the following typical properties:

- Charge in solution.....Cationic
- Density.....Approximately 8.6 lbs/gal
- Odor.....Oily
- Color.....Opaque
- Molecular Weight.....High
- pH.....4-6 (emulsion)

Cationic polymers used in the treatment process must be approved by the Wastewater Treatment Division and perform similar to the products commonly referred to as CVTEC Excel Ultra 5000, Hychem, Inc. CE 1923, Allied Colloids, Inc. Percol 778.

C. SODIUM HYPOCHLORITE

Sodium Hypochlorite is typically used in the wastewater treatment process for odor control. The Sodium Hypochlorite should have the following typical properties:

- Chemical formula.....NaOCl
- Concentration.....10 - 12 percent
- Appearance.....Yellow - green liquid
- pH.....12.5 - 13.5
- Specific Gravity.....1.1 - 1.2

- Solubility in water.....Complete

D. SODIUM HYDROXIDE (50% CAUSTIC SODA)

Sodium Hydroxide is also used in the wastewater treatment process for odor control. Sodium Hydroxide should have the following typical properties:

- Appearance.....Clear, viscous liquid
- Freezing Point.....10-12 Deg. C (50-54 Deg. F)
- Boiling Point.....130-140 Deg. C (266-284 Deg. F)
- Decomposition Temperature.....None
- Specific Gravity.....1.482-1.53
- Bulk Density.....Not Applicable
- pH @ 25 Deg.C.....13 (0.5% Solution)
- Vapor Pressure @ 25 Deg. C.....Approximately equal to water
- Solubility in Water.....Miscible
- Volatiles, Percent by Volume.....45-55
- Evaporation Rate.....No Data
- Vapor Density.....No Data
- Molecular Weight.....40.01 (Active agent)
- Odor.....None

E. LIQUID CHLORINE

Liquid chlorine is used for disinfection at the end of the advanced wastewater treatment process. Operators should consult the Safety and Emergency Sections of this manual before handling chlorine. Typical dosages for chlorine in the advanced wastewater treatment process should range from 8.0-12.0 mg/l. Chlorine used for disinfection should have the following typical properties:

- Formula.....Cl_2
- Molecular weight.....70.91
- Percent by volume.....99.5%
- Density.....86.5 lbs/cu.ft. @ 70°F
- Viscosity.....0.34 cps @ 70°F
- Nonvolatile matter.....40 ppm maximum @ 20° C
- Nitrogen trichloride (as NCL_3).....5 ppm maximum

F. METHANOL (VIRGIN AND RECLAIMED)

Methanol is used as an organic carbon source for the denitirification process. Operators should consult the Safety and Emergency Sections of this manual before handling methanol. Typical dosage range for methanol in the denitrification process will range from 3.0 ppm to 4.0 ppm per ppm of nitrate entering the denitrification process. Methanol used for this process should have the following typical properties:

- Formula.....CH_3OH
- Molecular weight.....3.04
- Percent methanol by weight (virgin).....99.90%
- Percent methanol by weight (reclaimed).....95.0%
- Appearance.....Colorless

- Odor.....None to slightly alcoholic
- Weight.....6.63 lbs/gal @ 60° F
- Boiling point 760 mm.....64.5° C
- Vapor density.....1.11
- Solubility.....Miscible in all proportions with water
- Viscosity.....0.614 cps @ 20° C

G. LIQUID OXYGEN

Liquid oxygen is used to supplement the gaseous oxygen produced in the cryogenic oxygen plants for the activated sludge processes. It is normally used instead of the gaseous oxygen during power failures or when major repairs are being made to one of the generation units. Operators should consult the Safety and Emergency Sections of this manual before handling liquid oxygen. The liquid oxygen should have the following typical properties:

- Purity.....99.6% or higher
- Dew point.....-76° F
- Density at normal boiling point.....9.52 lbs/gal

H. SULFUR DIOXIDE

Sulfur Dioxide is used to de-chlorinate the treated wastewater effluent prior to discharge. Typical properties of Sulfur Dioxide are as follows:

- Physical State.....Liquid (liquified compressed gas)
- Appearance and Odor.....Colorless gas or liquid. Strong pungent odor
- Odor Threshold.....0.5 ppm
- Boiling Point.....10° C (14° F) at 760 mmHg
- Melting/Freezing Point.....-75.9° C (-104.6° F)
- Vapor Pressure at 20° C (68° F).....2475 mmHg/330 kPa/47.8 psig
- Specific Gravity at 0° C (32°F).....1.436
- Vapor Density.....926 g/l at 0° C (32° F) and 760mmHg
- Bulk Density.....Not applicable
- Evaporation Rate.....40.18 g/m^2/s at 21° C (70° F). 16 km/hr wind speed (calc.)
- Solubility..... 11.9% by wt in water at 15° c (60°F) and760 mmHg. Also soluble in alcohols, chloroform, ether, acetic acid.
- Volatile by Volume.....100%

IV-LC-IM INSTRUMENTATION

The conventional wet chemistry techniques performed in the laboratory are augmented by variety of instrumented analyses. Following is a list of laboratory instrumentation and a brief summary of each:

- **Gas Chromatograph** - the gas chromatograph (GC) consists of a column, oven, detector and computer controller. Samples injected into the column pass through it to a detector at different rates according to their affinities for the packing material in the column. The components of a sample are

determined on the basis of the time they are retained on the column. This instrument is used for the determination of organics including methanol in the effluent and digester gas components.

- **Gas Chromatograph/Mass Spectrometer** - the "GC/MS" consists of a gas chromatograph coupled to a mass spectrometer as a detector. Temperature programming and column type are used in the gas chromatograph to separate the sample into individual components. The components emerge from the column in a specific order and are transferred by a heated line to the mass spectrometer. An electron beam in the mass spectrometer is used to break apart the components into identifiable mass/charge fragments which are compared to a library of known compounds. Two GC/MS units are used to analyze priority pollutants including volatile organic compounds (VOC) and extractable organic compounds (BNA).

- **Inductively Coupled Plasma - Optical Emission Spectrometer** - the "ICP - OES" consists of a torch, radio frequency (RF) coil and generator, polychromator and segmented array charge coupled device detector. A plasma (ionized gas) is generated as the energy from the RF coil is directed at a controlled flow of argon atoms. As the sample flows into the plasma, atoms of elements in the sample are excited. These excited atoms produce emission energy which is monitored at selected wavelengths. This instrument is used to determine metals concentrations.

- **Atomic Absorption Spectrometer** - the "AA" is a spectrometer which measures the absorption of energy by metals atoms at specific wavelengths. A flame or furnace is used to make the metals atoms available for absorption. A monochromator and photomultiplier tube are used to isolate and quantify energy at a selected wavelength. This instrument is used in the analysis of trace metals.

- **Autoanalyzer** - this is an automated system in which a sample solution and reagents are mixed to form a colored solution. The intensity of the colored solution is proportional to the concentration of the analyte of interest. This instrument is used in the quantative determination of ammonia, nitrate and nitrite.

- **Total Organic Carbon Analyzer** - the "TOC analyzer" is used to determine the inorganic and organic content of samples. Carbon in a sample is first changed to carbon dioxide. The amount of carbon dioxide is then measured using an infrared detector and the concentration of carbon computed from the amount of carbon dioxide.

- **Total Organic Halide Analyzer** - the "TOX analyzer" consists of a carbon absorption apparatus, furnace and microcoulometric titration cell. Organic halides are absorbed onto activated carbon. The activated carbon is then placed into a furnace that pyrolyzes the organic carbon to carbon dioxide and the halogens to hydrogen halides. The hydrogen halides are carried into a microcoulometric cell where quantition takes place. The TOX analyzer is used to determine organic halogenated compounds.

- **Spectrophotometer** - this instrument measures the reduction in the transmission of light that is caused by placing a solution between a light source and a detector. It is used in the analysis of samples for phosphates.

- **Dissolved Oxygen Meter** - this instrument consists of a meter and an electrode specific for oxygen. Dissolved oxygen in a sample causes a change in potential between a sensing element in the electrode and a reference electrode. The change in potential is converted into a direct readout of the amount of dissolved oxygen present. This meter is used to measure dissolved oxygen levels in aqueous samples and in the determination of Biochemical Oxygen Demand.

- **Acetylene Analyzer** - this analyzer selectively isolates acetylene from gaseous samples. The acetylene is mixed with a reagent to produce a colored solution. The concentration of acetylene in the colored solution is then determined with a colorimeter. This instrument is used to detect acetylene in oxygen samples.
- **pH Meter** - this is a digital direct readout instrument which measures hydrogen ion activity of a solution. The hydrogen ion activity indicates the intensity of the acidic or basic character of a sample.

IV-LC-MS MISCELLANEOUS

A. COMMERCIALLY PREPARED TEST KITS

Laboratory analyses are further augmented by the use of commercially prepared test kits. These kits have as the analytical device, a colormeter. The colormeter is either a spectrophotometer or a color comparator. These kits have the advantage of being portable, quick, and require no reagent preperation. The kits are usually prepared for a specific parameter. The following kits are regularly used:

- Ammonia - detection range 0 - 2.5 ppm
- Free Chlorine - detection range 0 - 2 ppm
- Total Chlorine - detection range 0 - 2 ppm
- Nitrate - high detection range 0 - 30
  - low detection range 0 - 400
- Nitrite - high detection range 0 - 150
  - low detection range 0 - 500
- pH- various specific pH detection ranges
- Dissolved oxygen - detection range 0 saturation

B. LABORATORY BENCH SHEETS

The results of the laboratory analyses are recorded on Laboratory bench sheets and entered into the Laboratory Information Management System (LIMS). Tables IV-LC-1, 2, 3, 4, 5, 6, 7 and 8 are samples of such bench sheets.

Table IV-LC-1 Laboratory Bench Sheet

AWT ANALYTICAL LABORATORY
BIOCHEMICAL OXYGEN DEMAND
BENCH SHEET

BOD / CBOD METHOD: SM 5210 B

TIME ON: | TIME OFF:

PAGE 2 OF 2

SAMPLE DATE:
DATE ON:
DATE OFF:
NUMBER OF DAYS: 5
ANALYST: /

SAMPLE LOC	DENIT.			CARB		MPS		JC 1		JC 1 INHIBITED	
BOTTLE #											
SAMP VOL	15	75	300	30	45	3.0	4.5	3.0	4.5	3.0	4.5
SAMPLE %	5	25	100	10	15	1.0	1.5	1.0	1.5	1.0	1.5
SEED - 2ML MPS	**** ****	**** ****	**** ****	**** ****	**** ****	**** ****	**** ****	**** ****	**** ****	**** ****	**** ****
IDO											
FDO											
IDO-FDO											
SEED AVG	**** ****	**** ****	**** ****	**** ****	**** ****	**** ****	**** ****	**** ****	**** ****	**** ****	**** ****
DROP SEED	**** ****	**** ****	**** ****	**** ****	**** ****	**** ****	**** ****	**** ****	**** ****	**** ****	**** ****
BOD 5 DAY											
AVG 5 DAY											

Table IV-LC-2 Laboratory Bench Sheet

DILUTION WTR			INITIAL CL2=		AWT ARALYTICAL LABORATORY BIOCHEMICAL OXYGEN DEMAND BENCH SHEET	SAMPLE DATE:
IDO			FINAL CL2=			DATE ON:
FDO			YSI	WINKLER	BOD / CBOD METHOD: SM 5210 B	DATE OFF:
IDO - FDO					TIME ON: / TIME OFF:	NUMBER OF DAYS: 5
AVERAGE			PAGE 1 OF 2			ANALYST: /

SAMPLE LOC	G/G STANDARD		SEEDED WATER		SEEDED FINAL EFFLUENT			SEEDED FINAL DUPLICATE			SEEDED/INHIB FINAL EFFL.			SEEDED/INHIB FINAL DUP.		
BOTTLE #																
SAMP VOL	3	3			15	75	300	15	75	300	15	75	300	15	75	300
SAMPLE %	2	2	100	100	5	25	100	5	25	100	5	25	100	5	25	100
SEED - 2ML MPS	2ML	2ML	2ML	2ML	2ML	2ML	2ML	2ML	2ML	2ML	2ML	2ML	2ML	2ML	2ML	2ML
IDO																
FDO																
IDO-FDO																
SEED AVG																
DROP SEED			**** ****	**** ****												
BOD 5 DAY			**** ****	**** ****												
AVG 5 DAY			********* *********													

FINAL EFF BOD	
DUP BOD	
BOD % RSD	
FINAL EFF CBOD	
DUP CBOD	
CBOD % RSD	
%RSD=(STDDEV/MEAN)X100	
DIL H2O PREP DATE	
DIL H2O DROP <=0.2MG/L	
G/G STD BET 167.5-228.5	
DO DRPS>=2.0MG/L W/A 1.0 MG/L RESID	

Sample Id	Sample Type	Component	Task Id
200050868	FINAL EFFLUENT	Biochemical oxygen demand (BOD	300241814
200050868	FINAL EFFLUENT	Carbonaceous biochemical oxyge	300241812
200050871	CARB EFFLUENT	Biochemical oxygen demand (BOD	300241832
200050874	DENIT EFFLUENT	Biochemical oxygen demand (BOD	300241839
200050876	JC 1 INFLUENT	Biochemical oxygen demand (BOD	300241850
200050876	JC 1 INFLUENT	Carbonaceous biochemical oxyge	300241848
200050877	MPS INFLUENT	Biochemical oxygen demand (BOD	300241858

End of Samples

Table IV-LC-3 Laboratory Bench Sheet

Sample Type: MPS INFLUENT
Sample ID: 200050593
Collect Date: 09/08/1996
Sample Volume: 50

	103 deg C
Weight Tare + Sol	_____
Weight Tare:_____	_____
Weight Solids	_____

mg/l Solids:_____

Sample Type: JC 1 INFLUENT
Sample ID: 200050592
Collect Date: 09/08/1996
Sample Volume: 25

	103 deg C
Weight Tare + Sol	_____
Weight Tare:_____	_____
Weight Solids	_____

mg/l Solids:_____

Sample Type: NIT REACTOR 4-6 COMPOSITE
Sample ID: 200050595
Collect Date: 09/08/1996
Sample Volume: 5

	103 deg C	550 deg C
Weight Tare + Sol	_____	_____
Weight Tare:_____	_____	_____
Weight Solids	_____	_____

mg/l Solids:_____
% Volatile:_____

Sample Type: CARB REACTOR 1-3 COMPOSITE
Sample ID: 200050587
Collect Date: 09/08/1996
Sample Volume: 5

	103 deg C
Weight Tare + Sol	_____
Weight Tare:_____	_____
Weight Solids	_____

mg/l Solids:_____

Sample Type: NIT WASTE
Sample ID: 200050591
Collect Date: 09/09/1996
Sample Volume: 2.5

	103 deg C
Weight Tare + Sol	_____
Weight Tare:_____	_____
Weight Solids	_____

mg/l Solids:_____

Table IV-LC-4 Laboratory Bench Sheet

S O L I D S B E N C H S H E E T

DATE: TIME START:_____ FINISH:_____ ANALYST:_____

TSS METHOD: EPA 160.2 TS METHOD: SM 2540 B VS METHOD: SM 2540 E

Sample Type: Blank Collect Date: RunDate

Sample ID: Sample Volume:

103 deg C

Weight Tare + Sol _____ mg/l Solids:_____

Weight Tare:_____ _____

Weight Solids _____

Sample Type: Final Effluent DUP Collect Date:

Sample ID: Sample Volume:

103 deg C

Weight Tare + Sol _____ mg/l Solids:_____

Weight Tare:_____ _____

Weight Solids _____

Sample Type: FINAL EFFLUENT Collect Date:

Sample ID: 200050576 Sample Volume: 500

103 deg C

Weight Tare + Sol _____ mg/l Solids:_____

Weight Tare:_____ _____

Weight Solids _____

Sample Type: NIT EFFLUENT Collect Date:

Sample ID: 200050605 Sample Volume: 500

103 deg C

Weight Tare + Sol _____ mg/l Solids:_____

Weight Tare:_____ _____

Weight Solids _____

Sample Type: CARB EFFLUENT Collect Date:

Sample ID: 200050586 Sample Volume: 100

103 deg C

Weight Tare + Sol _____ mg/l Solids:_____

Weight Tare:_____ _____

Weight Solids _____

Table IV-LC-5 Laboratory Bench Sheet

Sample Type: CARB WASTE
Sample ID: 200050588
Collect Date:
Sample Volume: 2.5

	103 deg C
Weight Tare + Sol	_____
Weight Tare:_____	_____
Weight Solids	_____

mg/l Solids:_____

Sample Type: THICKNER 1
Sample ID: 200050599
Collect Date:

	Wet	103 deg C	550 deg C
Weight Tare + Sol	_____	_____	_____
Weight Tare:_____	_____	_____	_____
Weight Solids	_____	_____	_____

% Total Solids: _____
% Volatile: _____

Sample Type: SCB 1-3 COMBINED
Sample ID: 200050594
Collect Date:
Sample Volume: 2.5

	103 deg C	550 deg C
Weight Tare + Sol	_____	_____
Weight Tare:_____	_____	_____
Weight Solids	_____	_____

mg/l Solids:_____
% Volatile:_____

Sample Type: ANDRITZ FILTRATE
Sample ID: 200050585
Collect Date:
Sample Volume: 25.0

	103 deg C
Weight Tare + Sol	_____
Weight Tare:_____	_____
Weight Solids	_____

mg/l Solids:_____

Sample Type: ANAEROBIC DIGESTER 1
Sample ID: 200050577
Collect Date:

	Wet	103 deg C	550 deg C
Weight Tare + Sol	_____	_____	_____
Weight Tare:_____	_____	_____	_____
Weight Solids	_____	_____	_____

% Total Solids: _____
% Volatile: _____

Table IV-LC-6 Laboratory Bench Sheet

Sample Type: ANAEROBIC DIGESTER 2 Collect Date:

Sample ID: 200050578

	Wet	103 deg C	550 deg C	
Weight Tare + Sol	_____	_____	_____	% Total Solids:
Weight Tare:_____	_____	_____	_____	% Volatile:
Weight Solids	_____	_____	_____	_____

Sample Type: ANAEROBIC DIGESTER 3 Collect Date:

Sample ID: 200050579

	Wet	103 deg C	550 deg C	
Weight Tare + Sol	_____	_____	_____	% Total Solids:
Weight Tare:_____	_____	_____	_____	% Volatile:
Weight Solids	_____	_____	_____	_____

Sample Type: ANAEROBIC DIGESTER 4 Collect Date:

Sample ID: 200050580

	Wet	103 deg C	550 deg C	
Weight Tare + Sol	_____	_____	_____	% Total Solids:
Weight Tare:_____	_____	_____	_____	% Volatile:
Weight Solids	_____	_____	_____	_____

Sample Type: ANAEROBIC DIGESTER 5 Collect Date: 09/09/1996

Sample ID: 200050581

	Wet	103 deg C	550 deg C	
Weight Tare + Sol	_____	_____	_____	% Total Solids:
Weight Tare:_____	_____	_____	_____	% Volatile:
Weight Solids	_____	_____	_____	_____

Sample Type: ANAEROBIC DIGESTER 6 Collect Date: 09/09/1996

Sample ID: 200050582

	Wet	103 deg C	550 deg C	
Weight Tare + Sol	_____	_____	_____	% Total Solids:
Weight Tare:_____	_____	_____	_____	% Volatile:
Weight Solids	_____	_____	_____	_____

Table IV-LC-7 Laboratory Bench Sheet

Sample Type: ANAEROBIC DIGESTER 7 Collect Date:

Sample ID: 200050583

	Wet	103 deg C	550 deg C	
Weight Tare + Sol	_____	_____	_____	% Total Solids:
Weight Tare:_____	_____	_____	_____	% Volatile:
Weight Solids	_____	_____	_____	_____

Sample Type: RAW SLUDGE 1 AND 2 Collect Date:

Sample ID: 200050598

	Wet	103 deg C	550 deg C	
Weight Tare + Sol	_____	_____	_____	% Total Solids:
Weight Tare:_____	_____	_____	_____	% Volatile:
Weight Solids	_____	_____	_____	_____

Sample Type: ANDRITZ CAKE Collect Date:

Sample ID: 200050584

	Wet	103 deg C	550 deg C	
Weight Tare + Sol	_____	_____	_____	% Total Solids:
Weight Tare:_____	_____	_____	_____	% Volatile:
Weight Solids	_____	_____	_____	_____

Sample Type: DAILY PROD COMP TRAIN #3 Collect Date:

Sample ID: 200050603 Sample Volume:

	Wet deg C	103 deg C	
Weight Tare + Sol	_____	_____	% Total Solids:
Weight Tare:_____	_____	_____	_____
Weight Solids	_____	_____	

Sample Type: PUGMILL TRAIN #3 Collect Date:

Sample ID: 200050607 Sample Volume:

	Wet deg C	103 deg C	
Weight Tare + Sol	_____	_____	% Total Solids:
Weight Tare:_____	_____	_____	_____
Weight Solids	_____	_____	

Table IV-LC-8 Laboratory Bench Sheet

CITY OF TAMPA AWWTP HACH BENCHSHEET
LABORATORY

SAMPLE DATE: ANALYSIS DATE:_____ START TIME:_____

HACH

Analysis	Sample Location	Mls.	HACH DR/3	K	NO3-NO2	mg/l	Analyst
NITRATE	Blank	25	_____	1.0		=_____	_____
	1mg/l std	0.25	_____	1.0		=_____	_____
	2mg/l std	0.50	_____	1.0		=_____	_____
200050586	CARB EFFLUENT	25.00	_____	1.0	____-____	=_____	_____
200050605	NIT EFFLUENT	5.00	_____	5.0	____-____	=_____	_____
200050576	FINAL EFFLUENT	25.00	_____	1.0	____-____	=_____	_____
NITRITE METHOD: EPA 354.1							
	Blank	25	_____	1.0		=_____	_____
	0.01mg/l chk std	25	_____	1.0		=_____	_____
	0.01mg/l std	25	_____	1.0		=_____	_____
	0.05mg/l std	0.0125	_____	1.0		=_____	_____
	0.10mg/l std	0.0250	_____	1.0		=_____	_____
200050605	NIT EFFLUENT	25.00	_____	1.0	____-____	=_____	_____
200050576	FINAL EFFLUENT	25.00	_____	1.0	____-____	=_____	_____
	DUPLICATE	25	_____	1.0		=_____	_____
	0.04 mg/L SPIKE		_____	1.0		=_____	_____
	0.01mg/l chk std	25	_____	1.0		=_____	_____

QUALITY ASSURANCE: FINAL EFFLUENT - NO2-N

PRECISION %RSD ACCURACY %R

_____ _____

Table IV-LC-9 Laboratory Bench Sheet

CITY OF TAMPA AWWTP LABORATORY AMMONIA AND TKN BENCH SHEET
SAMPLE DATE: ANALYSIS DATE:_____ START TIME:_____

Analysis	Sample Location	Mls.	Ml Titrant	K	mg/l	Analyst
AMMONIA	METHOD EPA 350.2					
	Blank	400	_____	0.7	_____	_____
	1mg/l check std	0.4/1000	_____	0.7	_____	_____
	1mg/l std	4/100	_____	0.7	_____	_____
	5 mg/l std	20/100	_____	0.7	_____	_____
	10 mg/l std	40/100	_____	0.7	_____	_____
200050593	MPS	400	_____	0.7	_____	_____
200050586	CARB	400	_____	0.7	_____	_____
	CARB DUPLICATE	400	_____	0.7	_____	_____
	CARB SPIKE-5ppm	400+4/100	_____	0.7	_____	_____
200050605	NIT	400	_____	0.7	_____	_____
200050589	DENITE	400	_____	0.7	_____	_____
200050576	FINAL EFFLUENT	400	_____	0.7	_____	_____
TKN	METHOD EPA 351.3					
	Blank	200	_____	1.4	_____	_____
	1mg/l check std	0.2/1000	_____	1.4	_____	_____
	1mg/l std	2/100	_____	1.4	_____	_____
	10 mg/l std	20/100	_____	1.4	_____	_____
	25 mg/l std	50/100	_____	1.4	_____	_____
200050592	JC1 INFLUENT	200	_____	1.4	_____	_____
200050593	MPS	200	_____	1.4	_____	_____
200050586	CARB	200	_____	1.4	_____	_____
200050605	NIT	200	_____	1.4	_____	_____
200050576	FINAL EFFLUENT	200	_____	1.4	_____	_____
	FINAL DUPLICATE	200	_____	1.4	_____	_____
	FINAL SPIKE-1ppm	200+2/100	_____	1.4	_____	_____

QUALITY ASSURANCE: PRECISION %RSD ACCURACY

AMMONIA _____ ____-____=____/5*100=____% Recov

TKN _____ ____-____=____/1*100=____% Recov

Table IV-LC-10 Laboratory Bench Sheet

PHOSPHATE BENCH SHEET

METHOD: ORTHO – P EPA 365.2

DATE:_____
ANALYST:_____
PAGE #_____

BEAKER NUMBER	SQL * LIMS # 2000	SAMPLE DATE	SAMPLE	SAMPLE VOL/ml	ABS READING	PPM	FACTOR	REPORTED PPM
BLANK			BLANK	50			1	
1			STANDARD 0.2 ppm	10			1	
2			STANDARD 0.4 ppm	20			1	
3			STANDARD 0.6 ppm	30			1	
4			STANDARD 0.8 ppm	40			1	
5			EXT STANDARD 0.5 ppm	25			1	
6								
7								
8								
9								
10								
11								
12								
13								
14								
15								
16								
17								
18								
19								
20								
21								
22								
23								
24								
25								

1 DUPLICATE & SPIKE (2ppm STD) MUST BE DONE FOR EACH RUN (MAX 10 SAMPLES)

Table IV-LC-11 Laboratory Bench Sheet

PHOSPHATE BENCH SHEET

METHOD: TOTAL – P EPA 365.2

DATE:_____
ANALYST:_____
PAGE #_____

BEAKER NUMBER	SQL * LIMS # 2000	SAMPLE DATE	SAMPLE	SAMPLE VOL/ml	ABS READING	PPM	FACTOR	REPORTED PPM
BLANK			BLANK	50			1	
1			STANDARD 0.2 ppm	10			1	
2			STANDARD 0.4 ppm	20			1	
3			STANDARD 0.6 ppm	30			1	
4			STANDARD 0.8 ppm	40			1	
5			EXT STANDARD 0.5 ppm	25			1	
6								
7								
8								
9								
10								
11								
12								
13								
14								
15								
16								
17								
18								
19								
20								
21								
22								
23								
24								
25								

1 DUPLICATE & SPIKE (2ppm STD) MUST BE DONE FOR EACH RUN (MAX 10 SAMPLES)

Table IV-LC-12 Laboratory Bench Sheet

pH BENCHSHEET

MONTH:
YEAR:

SAMPLE COLLECT DATE	SQL*LIMS SAMPLE I.D.#	FINAL EFF. pH	SQL*LIMS SAMPLE I.D.#	JC#1 INF. pH	SQL*LIMS SAMPLE I.D.#	NIT. REACT pH	SQL*LIMS SAMPLE I.D.#	RAW SLUDGE pH	pH BY
1									
2									
3									
4									
5									
6									
7									
8									
9									
10									
11									
12									
13									
14									
15									
16									
17									
18									
19									
20									
21									
22									
23									
24									
25									
26									
27									
28									
29									
30									
31									

Table IV-LC-13 Laboratory Bench Sheet

MONTH: 1996 DAILY BENCH SHEET – FINAL EFFLUENT – METHOD SM 9222 D

SAMPLE DATE / TIME	SOL/LIMS NUMBER	TIME IN / OUT	CL RESID	BEGIN BLANK	10ML	100ML	END BLANK	FECAL PER 100ML	NON/FC / 100ML	ANALYST ON/OFF
1 /		/								/
2 /		/								/
3 /		/								/
4 /		/								/
5 /		/								/
6 /		/								/
7 /		/								/
8 /		/								/
9 /		/								/
10 /		/								/
11 /		/								/
12 /		/								/
13 /		/								/
14 /		/								/
15 /		/								/
16 /		/								/
17 /		/								/
18 /		/								/
19 /		/								/
20 /		/								/
21 /		/								/
22 /		/								/
23 /		/								/
24 /		/								/
25 /		/								/
26 /		/								/
27 /		/								/
28 /		/								/
29 /		/								/
30 /		/								/
31 /		/								/

CHAPTER V

RECORDS

V-RC RECORDS

A. GENERAL

The maintenance of accurate records in the treatment plant has become a vital portion of the daily operation of a large facility such as this. Documenting the various aspects of operation will facilitate management decisions affecting the personnel, the operation of the process and the managing of budget items throughout the years. As regulations have become more stringent concerning the treatment process, accurate record keeping has also become a necessity to maintain compliance with all of the various regulatory agencies. Accurate records are also important when figuring cost estimates and proposed budgets each fiscal year.

Records should be filled out neatly, as accurately as possible and should be kept in a secure location to preserve them from damage or destruction. Some records will be kept in the various sections of the plant where they originate, but more important documents and confidential information will be kept in secure locations designated by plant administration.

B. DAILY OPERATING RECORDS

Following is a list of reports and forms that are currently used by plant personnel on a regular basis:

RECORDS
V-2

VI-SF-ET EMERGENCY TELEPHONE NUMBERS

PHYSICIANS:	Dr. David Lubin	253-3164
	Dr. John Carthy	932-1151
HOSPITALS:	St. Joseph's Hospital	870-4000
	Tampa General Hospital	251-7000
	University Hospital	971-6000
	Memorial Hospital	873-6400
EMERGENCIES:		
	Rescue	911
	Ambulance	911
	Fire Department	911
	Highway Patrol	911
	Sheriff	911
	Safety Department	274-8137
UTILITIES:	Tampa Electric Company	223-0800
	GTE (Telephone)	1-800-483-2000
	Department of Public Wors	274-8721
	Peoples Gas Company	272-1501
	Water Department	274-1634
	Stormwater	274-8197

CHEMICAL TRANSPORTATION EMERGENCY CENTER,
WASHINGTON, D. C. 1-800-424-9300

VI-SF-GN GENERAL

The safety Section of this manual is provided to assist in safeguarding the lives and physical welfare of all employees and the general public. It has been prepared by the staff of the Wastewater Treatment Division in collaboration with The City Safety Department and conforms to federal and state safety regulations.

As City of Tampa employees we are responsible for providing a public service in an efficient and safe manner. Good safety practices are an important part of efficient operations. For this reason the Department of Sanitary Sewers safety program has been addressed to four basic commitments:

- The safety of employees and the public is paramount.
- Safety shall take precedence over expediency or shortcuts.
- Every attempt must be made to reduce the possibility of accidents.
- It is our intent to comply with all applicable safety laws and regulations.

By exercising personal caution in complying with safe work procedures which apply to your job, you will meet your obligations to the public, your fellow worker and yourself.

VI-SF-OH OCCUPATIONAL HAZARDS AND RISK REDUCTION

A. PERSONAL HEALTH AND CLEANLINESS

Workers who come into contact with sewage are exposed to all the hazards of water-borne diseases. Tetanus and skin infections must also be guarded against. "Keeping the hands below one's collar," while working around sewage is an excellent rule. Many infections reach the body by the way of the mouth, nose, ears or eyes. Sewage workers should wash their hands thoroughly before smoking or eating. Care should be exercised in the selection and cleaning of drinking and eating utensils. Gloves are furnished and should be worn if coming in contact with wastewater from any stage of the process.

For protection against Tetanus, each employee should make sure that his or her tetanus shots are up-to-date. Hepatitis B vaccinations are available at the Health Department and are available to department employees. All cuts and abrasions, no matter how minor, should receive prompt first-aid treatment.

B. EYE PROTECTION

Eye protection should be given a high priority by every individual employee. Goggles or face shields must be used by any employee who is exposed to flying debris or particles in the vicinity of grinding, sand-blasting, metal or concrete chipping, lawn edging, and etc.

Appropriate face shields must be utilized near welding or acetylene cutting activities. Chemical goggles must be utilized when dangerous chemicals of any kind are being handled. Goggles or face shields must also be used any time an employee is in danger of getting wastewater from any stage of the process in eyes, face or mouth.

C. HEARING PROTECTION

Areas of dangerously high noise levels are to be identified with appropriate warning signs. When an employee is to work for extended periods in a high noise level area, the employee is to utilize the appropriate ear protection provided for the area. Prolonged exposure to excessive noise levels without appropriate hearing protection may lead to damaged hearing.

D. HEAD PROTECTION

Head protection is to be worn whenever working in or visiting areas where there is a danger of being struck by falling objects, of striking the head against obstructions or being struck by other workers on the same job. Hard hats shall be worn in all trench and excavation operations. Hard hats shall be worn in heavy construction areas and in maintenance areas while working under and around crane.

E. LIFTING OF OBJECTS

Improper position while lifting a heavy object is one of the most common causes of back injuries and are among the most numerous of all industrial accidents. The recommended method for lifting objects is to use the leg muscles and thus prevent strain on the back muscles. Be sure that there is adequate manpower to

accomplish the lifting task. When lifting, bend the knees and keep the back nearly vertical. Be sure to have a firm footing and plant feet squarely. The Division has a video on proper lifting techniques if you are uncertain as to proper procedure.

F. FALLS

Use caution when climbing ladders or steep stairs. Work areas, ladders and stairs should be kept free of grease, oil, ice and other materials which could cause personnel to slip and fall. Tools and portable equipment should be kept in designated work areas and removed from work areas when not in use.

Areas where polymers are stored, handled or used are subject to spills and therefore slippery floors. Spills of any kind should be cleaned up immediately to minimize the danger or slips and falls. Care should be taken to keep work areas dry and free of standing water and algae growth.

GOOD HOUSEKEEPING is a key to preventing falls.

G. MANHOLES, WET WELLS, TANKS AND DEEP STRUCTURES (CONFINED SPACES)

Work in manholes, inlet structures and wet wells should not be attempted unless sufficient help, proper tools and the necessary safety equipment are available. Job site protection, barricades and warning devices should be provided. Atmospheres in these locations may be hazardous due to the potential presence of explosive or toxic gases or oxygen deficiency, and must be monitored by an approved instrument. The Division has a video available for your training on safety in confined spaces.

EXPLOSIVE GASES will occur whenever methane, gasoline, oils, solvents or other hydrocarbon which may be infiltrated or washed into the sewage collection or treatment system are present.

TOXIC GASES which may be present include hydrogen sulfide, methane and solvents.

OXYGEN DEFICIENCY can occur whenever the oxygen in a closed space is depleted because of reactions with the surrounding environment.

The City of Tampa's confined space policy must be followed. The precautions listed below should be observed before entering any manhole, inlet structure or wet well:

- No one should enter a manhole, inlet structure or wet well alone.
- Before entering, tests should be made for the presence of explosive hydrocarbon mixtures, the presence of toxic gas and the oxygen level.
- The opening should be ventilated, if necessary, and the tests for explosive mixtures, toxic gases or oxygen deficiency repeated before entry.
- If a dangerous condition persists and entry must be made, a self-contained breathing unit is to be used. Cartridge-type gas masks are not acceptable.

- At least one other person should stand by at the entrance and observe the worker as he enters, works and leaves the opening.
- Smoking is prohibited in manholes, sewers, inlet structures, Screen Rooms and wet well.

A hazardous atmosphere may be caused by the accumulation of gases in certain areas of the plant if the local ventilating system fails.

Areas listed below are the most likely to be affected, however all confined spaces should be treated as potential areas of concern.

- Screen Rooms
- Lower levels of Pump Rooms
- Sludge handling facilities and Control Buildings
- Meter and valve vaults
- Service tunnels

Should it be necessary to enter any of these areas while the ventilation equipment is not functioning , the atmosphere must be monitored for hazardous gases, vapors, and oxygen deficiency. Work orders should be written immediately and portable ventilation equipment used if necessary.

H. OXYGEN DEFICIENCY

An atmosphere containing less than 19 percent oxygen is dangerous to human beings. Oxygen deficiency can occur in any confined space with inadequate ventilation. Oxygen deficiency may result from oxygen absorption by decomposing organic matter contained in sludge. The oxygen level should be checked with an oxygen deficiency indicator before entering any potentially hazardous confined space.

I. EXCESS OXYGEN

When more than 23 percent oxygen is present the potential for combustion of flammable materials is dangerously high. Such a condition can occur in the vicinity of the oxygen generation and storage equipment and on the roof of the reactors with the oxygen dissolution system.

Smoking is prohibited in these areas. Oxygen levels must be checked and a special permit issued before permitting any welding or acetylene burning activity. A hot work permit MUST BE obtained.

Any one knowingly exposed to an oxygen-rich atmosphere should be sure that his or her clothing is thoroughly ventilated after leaving the area, before smoking or before approaching any welding, acetylene burning or open fire activity.

J. NOXIOUS GASES AND VAPORS

A noxious gas or vapor may be directly or indirectly injurious to the health or life of humans., Noxious gases or vapors may cause burns, poisoning, or asphyxiation.

Areas likely to contain a hazardous or noxious atmosphere must be tested before personnel are permitted to enter.

The following is a list of properties, life hazards and precautionary measures associated with hazardous and noxious gases and vapors which may occur in wastewater facilities:

- CARBON MONOXIDE is highly toxic. It is practically odorless. Concentrations above 50 ppm in the atmosphere are considered dangerous and toxic.

- CHLORINE is a greenish-yellow gas and is heavier than air. Chlorine gas is a respiratory irritant and concentrations above 3.5 ppm in air are readily detected by most persons. Inhalation of 35 ppm for 30 minutes is considered the maximum range of safe exposure without respiratory protection. Beyond this level incessant coughing will occur. In extreme cases death can occur from suffocation.

- HYDROGEN SULFIDE is a colorless gas with an offensively strong odor similar to that of rotten eggs. It forms explosive mixtures with air at 4.3 percent. Hydrogen sulfide is heavier than air. Hydrogen sulfide is extremely toxic and is irritating to the eyes and the respiratory tract. The smell of hydrogen sulfide is unreliable as an exposure warning. At concentrations above 200 ppm the average human sense of smell is depleted so rapidly that after a few inhalations the presence of the gas is undetectable. Exposure to 400 parts per million can cause various symptoms of dizziness, intestinal disturbance and dryness and pain in the respiratory system. At concentrations of 700 ppm, hydrogen sulfide is acutely poisonous.

- METHANE is a colorless, odorless and tasteless gas which is lighter than air. It forms an explosive mixture with air. Methane is the principal hydrocarbon in natural gas.

- SULFUR DIOXIDE is a colorless, suffocating, and pungent gas which is both heavier and denser than air. Sulfur dioxide gas is intensely irritating to the eyes, throat, and upper respiratory system. Contact with the skin will cause burns. Proper clothing, gloves, foot wear, chemical safety goggles, and approved breathing apparatus should be employed in any dangerous, So_2 ladened atmosphere or situation where one could develop.

- NATURAL GAS (approximately 94% methane, 3% ethane, and 3% propane, nitrogen, and other gases) is a colorless, odorless, and tasteless gas. However, local utility companies typically add a trace of ethyl mercaptan which smells like decayed cabbage to serve as an odorizer for leak detection.

  Contact with skin and eyes may cause slight irritation. Inhalation of the product may cause headaches, nausea, and difficulty in breathing. The use of safety glasses, face shield, goggles, PVC/neoprene/butyl rubber gloves, and a self-contained breathing apparatus (in

area of high vapor concentration) should provide adequate protection when working with this product. consult the MSDS for specific first aid instructions.

Natural gas is extremely flammable and should always be stored in a cool, dry well ventilated area away from any source of ignition. In case of fire, if it is safe to do so, always shut off the source! The hazard of reignition or explosion exists if a fire is extinguished without stopping the flow of the gas!! In case of fire, emergency response personnel should be notified immediately.

Whenever the presence of a noxious gas or vapor is suspected or possible, the atmosphere should be tested with a gas detector which can be used to test for toxic gas, CO, H_2S, combustible gases and oxygen deficiency. If a dangerous gas condition is detected, the area must be ventilated thoroughly and the atmosphere retested before entry can be made safely. No short cuts or exceptions should ever be made in this procedure when working in and around sewage collection and treatment facilities.

If necessary to work in an area with a dangerous atmosphere, a self-contained breathing apparatus must be used. Cartridge-type gas masks are not acceptable for this kind of exposure. If one worker is committed to work with a self-contained breathing apparatus, a second worker should be standing by with a second self-contained breathing apparatus,. Proficiency in the use and maintenance of self-contained breathing apparatus is essential for all employees who may be exposed to such conditions. If the emergency work is to be done in a confined space, a safety line is mandatory.

K. EXPLOSION AND FIRE HAZARDS

Hazardous and explosive gas mixtures may develop in confined areas if air should combine with methane, natural gas, manufactured fuel oil or with gasoline vapors. Decomposition of organic matter can also produce hazardous and explosive gas mixtures. Four conditions which must exist before a gas explosion can occur are listed below:

- Presence of flammable gas
- Presence of oxygen
- A dangerous mixture of gas and oxygen
- A source of ignition such as open lights, sparks, hot filaments, lighted cigarettes, static electricity

Operating areas where such conditions may develop are normally ventilated. In the event of ventilation failure precautions must be taken to assure that explosive or dangerous gas mixtures do not develop undetected.

Critical areas of the plant where explosive mixtures are most likely to occur have combustible gas detection devices to warn of the development of the explosive mixtures.

The locations of the combustible gas detection devices are listed below:

- Raw Sewage Pumping Station Wet Well
- Junction Chamber No. 1
- Screen and Grit Building No. 1& 2
- Wet Well at Main Pumping Station
- Gas analyzer on top of the reactors
- Chemical Handling and Storage Area
- Krause Street Pumping Station Wet Well
- Ybor City Pumping Station
- San Carlos Pumping Station
- East Tampa Pumping Station

The devices are primarily intended to detect the presence of gasoline, solvent and other hydrocarbon vapors which may have washed into or infiltrated into the sewage collection or treatment system, and to detect methanol leaks or spills at the chemical handling and storage area.

Fire hazards also exist in the areas of paint and lubricant storage, lumber storage, paper product storage, warehouse areas, trash accumulation areas, and dry sludge storage areas. All such areas should be kept neat to minimize fire hazards.

L. FIRE PROTECTION EQUIPMENT

The plant is equipped with fire extinguishers in strategic locations to conform to the local fire regulations. Carbon dioxide fire extinguishers (Type BC) are suitable for use on electrical equipment and flammable liquids. The dry chemical extinguishers (ABC) are suitable for use on ordinary combustibles, flammable liquids and electrical equipment. Type ABC extingusihers have much more fighting capability per pound of capacity than Type BC extinguishers. The type BC extinguisher is preferred for use on any kind of a trash, wood, oil or paint fire. Both types are satisfactory for electrical fires, but the Type BC makes much less mess to be subsequently cleaned up.

Fire hydrants are located throughout the plant site for use by the Tampa Fire Department in the event that a major fire occurs.

The Tampa Fire Department is to be called immediately if a fire involving any part of a structure occurs. The Administration, Maintenance, Stand by Power and Heat Drying buildings have fire sprinkler systems. Haylon Fire protection is installed at Operations and Heat Drying computer rooms.

M. ELECTRICAL

The electrical systems in the treatment plant utilize from 120 to 13,200 volts, AC, there are also a number of low voltage DC systems. Even ordinary 120-volt electricity can be fatal if approached carelessly.

In case of an accident, it is imperative that the victim be freed from the live conductor promptly by shutting off the power or by moving the victim or the conductor with the use of an insulating material such as dry wood. The Fire Department Rescue Squad should be called immediately.

Only authorized personnel are allowed to open electrical cabinets or perform repairs on electrical equipment. Special precautions are necessary when the area around electrical equipment is wet. Workers should provide dry wood or insulating rubber mats to stand on.

Exposed wires which have been disconnected should be taped before workmen leave the job. All types of power distribution, circuit breaker, disconnect, bus bar and other types of electrical cabinets including lighting panels should be closed, roped off or otherwise protected if the repair crew must leave the job site before the work is completed.

The City of Tampa, Wastewater Treatment Division's lockout/tagout policy and procedure must be followed when working on electrical equipment, Section V1-6. When working is to be performed on the electrical part of equipment, the power supply is to be shut off at the circuit breaker in the Motor Control Center, and a "DO NOT OPERATE" tag should be attached. The "DO NOT OPERATE" tag should include the name of the repairman and the date. Wherever possible, the breaker should be locked with a padlock. When electrical repairs are being done, tagging or lockout at the local push button station is <u>not</u> acceptable.

In the event that equipment is left with the "DO NOT OPERATE" tag and/or padlock accidentally after the repairs are completed, and the repairman is no longer available, the tag and/or padlock may be removed after an appropriate investigation by a supervisor.

The effectiveness of grounding circuits should be tested periodically. The path to ground from circuits, equipment and conductor enclosures must be permanent and continuous, and must have ample current-carrying capacity to safely conduct any short circuit or ground currents that may occur.

All portable electric tools must be properly grounded with 3-wire conductors and plugs. Portable equipment protected by an approved system of double insulation need not be grounded. In tunnels, conduits and other wet locations, 120-volt extension cords and lighting systems should not be used. Low voltage or battery-operated equipment only should be used to avoid dangerous shock hazards. Pneumatic tools are safer in these conditions.

N. MECHANICAL

A preventive maintenance program is intended to keep all plant equipment in safe as well as dependable operating condition. Coupling guards, etc., should be maintained in place. Insulation on hot pipes and equipment should be maintained.Leakswhichlead to slipperyconditions should be repaired. Hangers and parts of equipment which may fall if loose should be periodically inspected and repaired to prevent dangerous falling objects.

Lockout/tagout procedures must be followed when working on electrical equipment, Section V1-6. When work is to be performed on any mechanical equipment, the power supply is to be shut off at the Motor Control Center and tagged with a "DO NOT OPERATE" tag which shows the repairman's name and the date. Padlocks may also be used.

Spouts on lubricating cans should be long enough to protect hands and keep them out of danger of rotating equipment. Whenever possible, machinery should be stopped before lubricating. Lubricating oil spills, leaks in oil lubricating equipment and excess grease should always be cleaned up promptly to avoid slipping hazards.

O. HOISTING EQUIPMENT

Hoisting equipment should be operated only by carefully trained employees. Hoisting equipment operators should have detailed knowledge of the equipment's capability and limitations before commencing any hoisting job. When hoisting equipment is being used, the manufacturer's instructions and load limitations must be carefully observed. Hoisting equipment should be included in the preventive maintenance procedures for the department.

The information listed below will help to achieve the safe operation of hoisting equipment:

- Hoisting equipment operators should study the "Crane User's Safety Manual."
- Hoisting equipment operators should study the manufacturer equipment manual and be thoroughly familiar with the equipment's capacity and limitations.
- Never exceed the manufacturer's load ratings.
- The operator is to respond to operating signals only from the appointed signal person, but he shall obey a stop signal at any time from anybody. Operators and signal men should utilize the standard signals published by the ANSI.
- Never allow anyone to ride the hook or the load.
- Use extreme caution and plan carefully when working in the vicinity of power lines or electrical equipment.
- Do not permit anyone to walk beneath suspended loads and do not swing suspended loads over other work crews.
- Never leave the operator's cab with a load suspended.
- Hoisting equipment crews and workers in area of hoisting operations must wear hard hats.

- Hoisting equipment should be inspected before it is operated and hoisting equipment should be kept clean and in good mechanical condition.

- Careful attention should be given to methods of rigging loads before hoisting. Slings and hoisting cables must be carefully inspected on a regular basis. Kinked or damaged slings and cables must be discarded immediately.

P. MAINTENANCE SHOP SAFETY

The precautions and procedures listed below should be followed to avoid accidents:

- Only hand tools in good condition should be used.

- All power tools should be properly grounded.

- Power tools should not be operating unattended.

- Goggles or face shields should be used around grinding and chipping activities.

- The tool rest for a grinder must be maintained with a proper gap.

- Floors and work benches must be kept free from grease, oil, and oily rags. These shall be disposed of in covered metal containers.

- Tools and parts should be kept in an orderly manner in work areas to avoid becoming tripping hazards.

- Employees should not perform electric welding and acetylene welding and cutting activities without adequate training.

- Welders should wear suitable clothing and use suitable gloves and eye and face protection.

- Welders should keep flash screens or curtains in place to protect other workers in the area from eye damage.

- Proper fire extinguishers must be kept available for all welding jobs.

- Acetylene and oxygen bottles should be properly secured if standing. Oxygen tanks and acetylene tanks should be stored separately in warehouse areas.

- Extreme care is to be exercised before welding on any drum or tank. Tests must be made to insure that no flammable materials are in such drums or tanks.

Q. VEHICLE OPERATION

Operators of city vehicles must be properly licensed by the State of Florida. Use of seat belts is required any time a vehicle is in motion.

Vehicle operators are required to obey all state and city traffic regulations. Speed limits are to be carefully observed within the treatment plant areas.

Before backing a vehicle when the line of vision is obstructed, dismount and walk around the vehicle and observe the clearance above and to the sides of the vehicle.

Operation of specialized equipment requires specific training, (i.e. forklift, front end loader, backhoe, mobile crane, dump trucks). Golf carts must be operated with proper discretion.

R. FIRST AID

Complete first aid kits are maintained at most work areas, including Operations, Maintenance and Administration Buildings. Inventory of first aid supplies should be checked periodically and supplies replenished as necessary.

First aid should be administered only by trained personnel. All employees who work on shifts or who participate in activities which require the use of city vehicles on public highways should take the Red Cross Multimedia First Aid Course which is offered to all City employees. Such participation will insure that expert first aid treatment is available in the event of injury to any employee or citizen.

If a serious injury occurs, call the Tampa Fire Department EMS.

S. FIRE BLANKETS AND STRETCHERS

Fire blankets and basic first aid equipment are located at 3 strategic locations in the treatment plant area as listed below:

- Maintenance Facility - South corridor
- Operations Building
- Control Room in Filter building
- Laboratories

The blankets maintained at each location are fire proof and they are suitable for wrapping a victim to extinguish a fire on the victim. Primary use for these blankets is, however, to keep an injured victim warm to prevent shock.

An emergency basket stretcher is located in the Control center in the Main Pumping Station. The Tampa Fire Department EMS also has stretchers for difficult locations.

T. SAFETY SIGNS FOR HAZARDS AND EQUIPMENT IDENTIFICATION

Serious accidents can be avoided by posting danger signs at the entrance to potentially dangerous areas and on, or adjacent to, equipment representing a hazard to other personnel. The following is a list of hazard warnings likely to be required:

- ELECTRICAL HAZARD WARNING to be used around outdoor substations, switch gears, power lines, lighting systems and electrical indoor installations which are being repaired. High voltage installations and equipment should be so marked with permanent signs.

- NOXIOUS, TOXIC AND FLAMMABLE GAS OR VAPOR signs should be used in any area where such hazards have been determined to exist through testing. Areas around chlorination facilities, gasoline storage areas, oxygen-generation and storage equipment, oxygen dissolution equipment, methanol storage and handling facilities, methane production and handling equipment, and other known hazardous areas should be appropriately marked with permanent signs.

- HANDLE WITH CARE signs should be posted wherever dangerous chemicals such as sodium hypochloride, chlorine, caustic soda, and other dangerous materials are stored or used.

- NO SMOKING signs should be posted around areas which are potentially dangerous such as the oxygen-generation and storage equipment, the oxygen dissolution system, methanol storage and handling facilities, methane production and handling facilities, wet wells, Junction Chamber No. 1, Screen and Grit Buildings No. 1 & 2, gasoline storage and handling facilities, fuel oil handling system for the standby generators, paint storage areas, other such locations. These rules apply to the sewage collection and lift station systems as well as to the treatment plant areas.

- CAUTION signs should be posted to alert personnel to the presence of potential hazards and to caution them against unsafe practices. Examples are MAN WORKING ON LINE, MEN WORKING ABOVE, and DO NOT OPERATE.

- The EXIT signs located in all of the buildings and tunnels throughout the treatment plant must be maintained carefully.

U. SAFETY COLOR CODES

Safety color codes were included in the contract specifications for the construction and painting of the wastewater treatment division facilities. The original colors on pipelines and equipment should be conscientiously maintained. Colors should not be changed on any pipeline or any piece of equipment without proper authorization.

V. SAFETY MEETINGS

Regular safety meetings are to be held each week by all supervisors. The safety meetings should be of the "tailgate" type and should not exceed 10 minutes. The topics listed below should be discussed:

- Keep employees informed of any new safety rules or regulations - weekly.
- Review temporary hazards around the work area and unsafe work practices observed - weekly.
- Progress of the safety program - monthly
- Causes of any accidents that may have happened since the last meeting and steps for correction - weekly.
- Anticipated hazards which may be encountered during the work schedule for the next week - weekly.
- Inspection reports by the Safety Department - monthly.

Supervisors should conscientiously investigate all accidents involving injury, vehicle damage or lost time to determine cause and to initiate corrective steps to prevent recurrence.

Employee participation in safety investigations and discussions is requested and encouraged.

W. SAFETY AND HOUSEKEEPING INSPECTIONS

Housekeeping is the backbone of a good safety record. Housekeeping is an indication of the efficiency of the operations and maintenance activities. All supervisors should regularly inspect their respective areas of responsibility for good housekeeping and for general condition of the facilities and equipment.

Accumulations of trash, scattered trash, old parts, and other litter should be cleaned up promptly. Hoses, cables, and the like should be coiled up promptly after use. Unsightly areas should be promptly cleaned up or painted as the case may be.

Safety hazards of all types including hazardous condition of any facility or any equipment should be corrected promptly and protected temporarily if necessary.

VI-SF-SW SPECIAL HAZARDS

A. HANDLING OF CHEMICALS

Personnel working at the Advanced Wastewater Treatment Facility must become familiar with not only the chemicals used in conjunction with the process, also the properties of those chemicals. Many of the chemicals used are potential hazards and proper safety methods will be necessary for the handling of these materials. Specific procedures are outlined in sections to follow to insure reasonably safe handling of large or small quantities of the given chemicals. This section is certainly not all inclusive of all chemicals which could be found at the plant, but is aimed at the major chemicals which will be stored and routinely handled in large quantities. Before handling other chemicals not listed in this section, it will be necessary to consult one of many handbooks or specific manufactures' safety bulletins.

(1) POLYMERS

Polymers are synthetic flocculants with high molecular weights and specific charges. These flocculants are water soluble and are used in various phases of the treatment processes as an aid for settling or flotation and dewatering. Polymers are available in both liquid and powder form. Contact with skin or clothing should be avoided even though most polymers are considered harmless. Polymers should not be taken internally or vapors constantly inhaled. Care should be taken to avoid contact with the eyes. Probably the most hazardous feature of a polymer is its slippery nature. Both liquid and powder polymer spills should be cleaned up immediately to avoid prolonged slippery conditions in any area. Please refer to MSDS file for information on the current polymer in use. Polymers are handled in the following areas:

- Primary Sludge Drying Beds
- Filter Building
- Reactors
- Final Sedimentation Tanks
- Sludge Control Building
- Sludge Drying Beds
- Belt Thickener Building
- Belt Press Building
- Gravity Thickeners
- Wear protective clothing to avoid skin contact

(2) METHANOL

Methanol is used as a carbon source in the denitrification process. Methanol is probably one of the most dangerous chemicals to be handled at the AWT Plant. Methanol presents several special hazards. Refer to MSDS file for complete information on hazards and handling. Methanol is both flammable and explosive and should be considered dangerous when exposed to heat or flame. Methanol will ignite at 878 degrees F. Explosive limits are listed as between 6.0 percent and 36.5 percent by volume in air and is considered moderately explosive.

Methanol reacts with oxidizing agents vigorously and is considered very dangerous.

The possibility of poisoning with methanol is quite real. Methanol should be considered highly poisonous by the following means:

- Ingestion
- Inhalation
- Skin contact

This means that anyone working with methanol will be required to take the following precautions:

- Avoid ingestion
- Work in well ventilated areas
- Wear eye protection

Acute effects of exposure to methanol are as follows: headache, fatigue, nausea, visual impairment or complete blindness (may be permanent), acidosis, convulsions, mydriasis, circulatory collapse, respiratory failure, death.

Chronic exposure may result in visual impairment.

Death from ingestion of less than 30 ml has been reported; however, the usual fatal dosage is between 100-250 ml.

(3) CAUSTIC SODA

Caustic soda (also known as lye or sodium hydroxide) may be used in the plant for pH neutralization. Caustic soda is strongly corrosive and is considered a severe irritant. Refer to the MSDS file for complete safety information on sodium hydroxide 50%. Caustic soda can be a hazard in the following ways:

- Irritant - can cause death or permanent injury with short-term exposure to small quantities.
- Ingestion - can cause death or permanent injury with short-term exposure to small quantities.
- Inhalation - may involve both irreversible and reversible changes not severe enough to cause death or permanent injury.

Sodium hydroxide causes severe burns, tissue damage, damage to mucous membrane and lung damage. The solution of caustic soda in water releases heat which will aggravate the chemical burn damage.

Persons working with caustic soda should wear protective clothing, goggles and face hoods. Caustic handling areas should be well ventilated. Treatment for exposure to caustic soda should be massive irrigation with large quantities of water to the affected area for a minimum of 15 minutes. If eye contact or other serious contact is involved, the person should always see a physician for possible treatment.

(4) SULFUR DIOXIDE

Sulfur dioxide is used for dechlorination of the plant's final effluent. Sulfur dioxide reacts instantaneously with chlorine on approximate a one-to-one basis to remove any chlorine residual before release into the receiving waters. Sulfur dioxide is very irritating to eyes, throat, lungs, and skin. sulfur dioxide is hazard to health in the following ways:

- Irritant - Sulfur dioxide is extremely harmful when it comes into contact with the eyes, skin and lungs. Burns and death can both occur.
- Ingestion - Ingestion of liquid sulfur dioxide will result in burns of the mouth and gastrointestinal tract due to the freezing effects of the liquid.
- Inhalation -Even at concentrations of 150 ppm, sulfur dioxide is so highly irritating that it can be endured for only a few minutes, and at 500 ppm will cause a sense of suffocation.

Consult the product's MSDS sheet for first aid procedures. Persons working in areas where a dangerous sulfur dioxide laden atmosphere or physical contact is possible should wear impervious clothing, gloves, footwear, safety goggles, and approved breathing apparatus.

(5) SODIUM HYPOCHLORITE

Sodium hypochlorite is used to neutralize the hydrogen sulfide which enters the headworks of JC1. Sodium hypochlorite is a yellow-green liquid which is both corrosive and irritating to humans. Sodium hypochlorite can be hazardous in the following ways:

- Irritant -Severe reddening of skin and eyes; may cause skin/eyes damage.
- Ingestion - Causes irritation to membranes of the mouth, throat, stomach pain and possible ulceration.
- Inhalation -Fumes from spills are very irritating to mucous membranes.

Persons working with sodium hypochlorite should use chemical eye goggles, rubber gloves, and a rubber splash apron. In instances of excessive fume development, a certified (NIOSH) gas mask with canister for chlorine should be used.

B. LABORATORY HAZARDS

Working in the laboratory is a potentially hazardous job to the employee not trained in proper lab safety. This subsection contains safety suggestions for some of the more common laboratory hazards; however, it does not include all hazardous situations which might arise.

(1) INFECTIOUS MATERIALS

In a sewage treatment process lab, most all samples received for analysis should be considered infectious. These samples should be handled in such a way as to minimize contact with open wounds and all parts of the body. After exposure to any sewage or sludge sample the technician should exercise rigorous personal hygiene. When analysis is complete, the sample should be disposed of in a manner which will minimize public contact.

Bacteriological laboratory waste also constitutes a potentially infectious material. The technician must bear in mind that any culture of bacteria from sewage contains many potential pathogens in a more concentrated form than the original sample. Therefore, the handling of these materials should be with excellent sterile technique. Disposal of cultures in a proper method is essential to personal and public health.

(2) CORROSIVE MATERIALS

Many corrosive materials are handled routinely in a sewage treatment process laboratory. In handling strong acids, strong bases, oxidizing agents, and reducing agents, the technician should be familiar with the possible physical and chemical reactions which may occur. An in-house training program will be necessary for the proper handling of these potentially hazardous materials. Storage of corrosive materials in safe locations in the proper containers is necessary to insure the safety of lab personnel and equipment.

Because of the hazard of contact with this type material, several laboratory safety devices are provided in the laboratory. A shower and eyewashes are located throughout the lab for the purpose of thoroughly irrigating an area of the body with large volumes of water. In addition to the two above-mentioned devices, water faucets are located at frequent intervals in the lab for the purpose of immediate rinsing of the extremities.

(3) TOXIC MATERIALS

All toxic materials should be properly labeled and handled with extreme care and personal cleanliness. Trained lab personnel should be familiar with all substances in the lab which are toxic and treat them as such. The presence of these materials is probably one of the best arguments for keeping unauthorized personnel out of the lab. Fume hoods are provided for proper removal of toxic gases and vapors. Spills of toxic materials should be properly contained and cleaned up. If by chance a person is critically exposed or ingests a toxic material, an ambulance should be called immediately and the poison control center at a hospital should be consulted to determine the proper first aid.

(4) EXPLOSIVE AND FLAMMABLE MATERIALS

Explosive and flammable materials should be stored in safety containers in a metal cabinet. When performing a procedure where quantities of explosive or flammable vapors are evolved, a fume hood should be used. When using any volatile material, care should be taken not to expose said substance to an open flame, electrical arc, spark, or hot heating element.

Special hazards exist with the use of laboratory instrumentation, the manufacturers manual should be consulted.

All flammable gases for the lab are stored outside and piped into the lab. Proper storage of gas cylinders is essential.

(5) BROKEN EQUIPMENT

Broken or cracked glassware is a serious hazard. Broken glassware should be disposed of, polished, or repaired immediately to avoid danger of serious cuts. If broken glassware is disposed of in a waste can, that can should have a sign attached reading "Danger Broken Glass." Cracked glassware should never be used in a laboratory procedure because of danger from cuts or spills if the vessel did break.

The general use of any broken or seriously worn piece of equipment is discouraged if there is a potential danger involved.

(6) CENTRIFUGES

Centrifuges are not dangerous if the operator adheres to a few safety rules.

- Make sure centrifuge is anchored properly so it cannot walk.
- Always use shielding to guard against "fly-aways."
- Always balance tubes before use.
- Place where vibration will not cause objects to fall.
- Where possible use plastic centrifuge containers.

If these measures are taken, the possibility of danger is greatly reduced.

(7) AUTOCLAVES, OVENS AND MUFFLE FURNACES

The potential for burns is high around this type of equipment. If ovens and furnaces are operated properly and asbestos gloves and tongs are used for removing and handling the hot objects, burns may be kept at a minimum. Hot objects should be placed in a location which will prevent someone from inadvertently picking them up and handling the hot objects, burns may be kept at a minimum. Hot objects should be placed in a location which will prevent someone form inadvertently picking them up.

Volatile materials should be excluded from any oven not properly equipped with explosion-proof features.

Autoclaves present special problems in that heat and steam are both present. Our autoclave is furnished with all of the latest safety features. Nevertheless, an autoclave should be treated with utmost respect and each operator should be properly trained

(8) MISCELLANEOUS

Many hazards exist in a laboratory situation which only qualified trained personnel can identify. Most hazards may be eliminated through (1) good housekeeping; (2) proper storage; (3) proper labeling; (4) adequate wiring; (5) good lab technique; and (6) common sense.

C. RAW SEWAGE PUMPING STATION

Special hazards and features are:

- Possible noxious gases and/or explosive hydrocarbon vapor mixtures in the wet wells.
- Ventilation system must be carefully maintained
- Combustible gas detection sensor in wet well
- Methane gas feeding system for the engine generators

D. PREAERATION TANKS

The special hazards and features are:

- Hydrogen sulfide, noxious gases and/or hydrocarbon vapors
- Combustible gas detection sensor in preaeration tanks
- Hearing protection must be worn when working around the blowers.

E. JUNCTION CHAMBER #1 ODOR CONTROL

The special hazards and features are:

- Hearing protection must be worn when working around the blowers.
- Face shield and or eye protection must be worn when working around any of the chemical pumps.
- Sodium Hypochlorite Bleach Storage Area
- Sodium Hydroxide Caustic Storage Area

F. SCREEN AND GRIT BUILDING NO. 1

The entire building is a NO SMOKING area, the Electrical Control Room in the northeast corner of the building.

The special hazards and features are listed below:

- Noxious gases and/or explosive mixtures of hydrocarbon vapors may be present
- There are five combustible gas detection sensors
- All of the electrical and instrumentation equipment in the building is explosion-proof except for the equipment in the Electrical Control Room in the southwest corner. It is imperative that the integrity of the explosion-proof features of all of the subject equipment be carefully maintained.
- There are two belt conveyors in the building. Care must be exercised to insure that no employee reaches inside of the conveyor belt while it is operating. Head and tail pulleys should only be cleaned when the equipment is not operating.

G. SCREEN AND GRIT BUILDING NO. 2

This entire building is a NO SMOKING area, the Electrical Control Room in the southwest corner of the building.

The special hazards and features are listed below:

- Noxious gases and/or explosive mixtures of hydrocarbon vapors may be present.
- There are five combustible gas detection sensors.
- All of the electrical and instrumentation equipment in the building is explosion-proof except for the equipment in the Electrical Control Room in the southwest corner. It is imperative that the integrity of the explosion-proof features of all of the subject equipment be carefully maintained.

- There are two belt conveyors in the building. Care must be exercised to insure that no employee reaches inside of the conveyor belt while it is operating. Head and tail pulleys should only be cleaned when the equipment is not operating.

H. MAIN PUMPING STATION

Special hazards and features are listed below:

- There may be noxious gases and /or explosive mixtures of hydrocarbon vapors in the main wet well.
- There is a combustible gas detection sensor in the wet well.
- The Process Control Center for the entire AWT Plant is in the Main Pumping Station. The alarms and monitoring instruments in the Process Control Center must be carefully maintained to insure proper surveillance of the various process controls and conditions throughout the AWT complex.
- When the standby generators are operating, the high noise level in the north portion of the Main Pumping Station will require the use of hearing protection.
- The fuel supply for the standby generators is in the basement of the Main Pumping Station and requires good maintenance and good housekeeping practices to insure that accumulated oil does not become a fire hazard. The area around the fuel system is designated as a NO SMOKING area.

I. REACTORS AND OXYGEN DISSOLUTION SYSTEM

Special hazards and features are listed below:

Oxygen may escape or be released to the atmosphere through oxygen pipeline leaks, leaks in the concrete roof of the reactors, leaking manways in the roof of the reactors, seals on the aerator shafts, discharge from the pressure relief valves on the reactor roofs and cause local accumulations of oxygen above the reactors which may cause dangerous fire hazard conditions.

Noxious gases or vapors may escape from the reactor system or the sewage channels and accumulate above the reactors. Employees should be aware of the potential for such conditions and stay abreast of circumstances around the facility which may cause unusual gas conditions.

- The gas testing system for the reactor exhaust gas is extremely important to the control of the activated sludge process and to the safety of the plant and its equipment. A good preventive maintenance program for this gas testing system is essential.

- In the event of the intrusion of volatile hydrocarbons such as gasoline into the sewage system it is necessary that every effort be made to divert such volatile hydrocarbons before they reach the reactors. Refer to Section III-12, Reactors for a discussion of the combustible gas detection system.

J. OXYGEN GENERATION AND STORAGE FACILITIES

The special hazards and features are listed below:

- Oxygen may escape or be released to the atmosphere through sampling, leaks or the normal surplus production exhaust to atmosphere and cause locally high concentrations of oxygen. Such a condition may cause a locally high concentration of oxygen and may provide a dangerous fire hazard situation. When it is necessary to do any welding or acetylene cutting operations, or permit a vehicle with an internal combustion engine into the oxygen facility area, it is essential that oxygen concentration tests be made and a safety work permit issued for each specific occasion.

- In the event that an employee is exposed to a high oxygen concentration such as when collecting a liquid oxygen sample, the employee must allow his clothes to thoroughly ventilate in normal atmosphere before he is exposed to smoking, welding or open fire situations. This extremely important, because oxygen saturated clothing is highly flammable.

- Employees working close to the main compressors in the oxygen generation unit for extended periods of time must wear hearing protection.

- Nitrogen gas is normally exhausted into the atmosphere near the top of the Cold Box. Nitrogen may also escape to the atmosphere through leaks. Whenever entering a closed space such as the Switch Valve Shelter or the Cold Box, the atmosphere should be tested to make sure there is sufficient oxygen present. Excessive nitrogen concentrations will displace oxygen and create an atmosphere where an employee could be asphyxiated.

K. FINAL SEDIMENTATION TANKS

Final sedimentation tanks are big in area and relatively isolated. Employees should be extra careful to avoid slips and falls in such isolated situations.

L. CHLORINATION/DECHLORINATION FACILITIES

Special hazards and features are listed below:

Chlorine and sulfur dioxide are poisonous gasses. Inhaling chlorine or sulfur dioxide will cause serious irritation of the respiratory system. Any leak is a serious matter and should be repaired promptly. A serious leak must be treated as an emergency.

- In the event of a serious chlorine or sulfur dioxide leak the Fire Department is to be called immediately.
- In the event of a leak of sufficient volume to go off site to the surrounding community the Police Department is to also be called.
- In preparation for repairing any leak to a chlorine container such as a tank car, employees should be proficient in the use of B and C Repair Kits and in the use of the MSA Air Packs.

- In the event of a leak, investigation should be conducted with two employees at the scene. Two MSA Air Packs should be available. One man with MSA Pack should investigate the leak and make repairs if possible while the second employee observes from a safe distance. If the use of an Air Pack

is required in any such situation, the Fire Department must be contacted before wastewater treatment division employees enter the leak area.

- It is emphasized that two employees must work together in investigating chlorine leak problems.
- It is emphasized that proficiency in use of the B and C Repair Kits and MSA Air Packs must be achieved by timely training. Untrained employees cannot deal with the procedures necessary for the safe operation of MSA Air Packs and the emergency B and C Kit repair tools under emergency conditions.
- Canister type gas masks and respirators are not to be used for protection from chlorine.

M. SLUDGE PUMP SYSTEMS

The special hazards and features are:

- Housekeeping around Marlow sludge pumps is essential to avoid slipping hazards.

N. ANAEROBIC DIGESTION SYSTEM

The special hazards and features are:

- Methane gas is produced in the anaerobic digestion process. Methane gas is flammable and forms explosive mixtures when it escapes into confined spaces.
- The anaerobic digestion area is a No Smoking area.

O. DIFFUSED AIR REACTORS

The special hazards and features are:

- Fine bubble air diffusers reduce buoyancy, creating a potential hazard, extreme care should be taken in this area
- Extra care should be taken to avoid numerous tripping and over head piping hazards in the reactor area.
- Hearing protection must be worn in the Blower Building.

P. SLUDGE DRYING AND HANDLING

The special hazards and features are:

- There are several belt conveyors in the sludge handling area. Employees must never ride on or step on a moving conveyor belt.
- Employees must never attempt to clean the head or tail pulleys of a belt conveyor during operation.
- Only trained and qualified employees should operate the end loaders and other heavy equipment in the sludge drying area.

Q. SLUDGE HEAT DRYING FACILITY

The special hazards and feature are:

- Dust masks should be worn where dust occurs during maintenance.
- Hearing protection should be worn in the drying area of the building if working for extended periods of time.
- Heat dried product is flammable , caution should be used in the area, sources of ignition should be controlled.
- Storage of dried product must be kept from moisture to avoid spontaneous heating and combustion due to organic decomposition.
- Extra caution should be exercised to avoid numerous rotating equipment at the Sludge Heating Drying Facility.
- Natural gas is used in this area, open flames and smoking are prohibited in the area.

R. CHEMICAL UNLOADING PLATFORM AND SYSTEMS

The special hazards and features are:

- Railroad tank cars will be spotted on various railroad sidings for unloading chemicals such as chlorine, sulfur dioxide and methanol. Tank cars connected for unloading must be protected from bumping by other railroad cars by the proper use of "TANK CAR CONNECTED" signs.

- One wheel of each connected tank car must be properly blocked with a well designed wheel choke on each side of the wheel. Unloading pipe and hose connections must be carefully maintained. Such connections should be carefully inspected before each use. Unloading pipe and hose equipment should be carefully stored when not in use.

- Great care must be exercised to insure that chemicals being unloaded go to the correct storage tank. All valves along the route to the selected storage tank should be double checked each time a transport is unloaded.

- Storage tank level monitoring devices must be inspected regularly to insure accurate measurements. Faulty tank measurements can lead to tank overflows during unloading.

- If a tank is to be emptied and opened for cleanout or other maintenance, great care must be exercised in testing the atmosphere inside the tank for safety before entering. Some of our stored materials such as methanol are toxic. Other materials may cause a shortage of oxygen.

- Methanol and chlorine are especially toxic and dangerous. Therefore, reference should be made to the respective sections on methanol and chlorine.

- The chemical unloading area is posted for No Smoking because some of the materials handled are flammable.

S. METHANOL STORAGE TANK

The special hazards and features are:

- Methanol is very flammable, explosive mixtures with air can occur in a confined space.
- The methanol storage tank area is posted for No Smoking.
- Methanol is toxic either when taken internally or from prolonged breathing of the vapor. Methanol is also known as wood alcohol.
- Because of the toxic and flammable nature of methanol all pump and pipe system leaks should be promptly detected through regular inspections and repaired.
- The level monitoring system on the methanol storage tank should be carefully maintained to insure accurate level measurements.

T. CHEMICAL STORAGE TANKS

The special hazards and features are:

- Tank level measuring devices should be carefully maintained in order to insure accurate level measurements. Incorrect and misleading level measurements can cause tank overflows during unloading activities.
- Great care must be exercised to double check all of the valve positions along the route to the selected storage tank during the unloading of chemicals to insure that materials are not accidentally mixed.
- When a storage tank is to be cleaned out or otherwise maintained, it is essential that the atmosphere inside the tank be tested before entry. Some materials are toxic and some materials may cause oxygen deficiencies. Leaks in the pumping and piping systems must be detected promptly through regular inspections and corrected to avoid slipping hazards and other safety hazards.

U. EMERGENCY GENERATORS

The special hazards and features are:

- The emergency generator engine fuel is flammable and the fuel system must therefore be carefully maintained to avoid fuel leaks.
- The generators produce 13,000-volt power and therefore the 13.2 kv Switchgear No. 2 must be maintained and operated with appropriate respect. Only electrical department employees are authorized to open cabinet doors to the emergency generator switchgears.
- When any emergency generators is operating there is a very high noise level in the area. Any employee outside of the Control Room but inside of the building during generator operation must wear hearing protection of an approved type.

V. ENGINE GENERATORS

The special hazards and features are:

- The fuel for the generator engines is methane from the anaerobic digestors. Methane is flammable and it is somewhat toxic.

- Leaks in the fuel feeding system must be detected and repaired promptly.

W. COMPRESSED AIR SYSTEMS

The special hazards are features are:

- Compressed air is dangerous and can penetrate human skin if handled carelessly.
- Compressed air may not be used to blow dust, and employees' clothing unless the pressure is specifically reduced through an authorized reducing valve to 15 pounds or less.
- Horse play with an air hose of any kind is extremely hazardous and must be prohibited.
- When using compressed air for cleaning equipment, eye protection must be utilized by all employees in the immediate area.

X. POTABLE, PLANT AND EFFLUENT WATER

The special hazards and features are:

- Cross connections from the plant water system or from the effluent water system to the potable water system is prohibited, even temporary connections to city or potable supplies are prohibited.
- Each of the hydrant and hose outlets in the plant water system and the effluent water system are to be marked with signs saying "CAUTION - NONPOTABLE WATER - DO NOT DRINK." Employees must be trained to drink water only from potable water outlets.
- Wash down hoses should be carefully coiled and stored at all times when not in use to avoid tripping hazards.

VI-SF-SE SAFETY EQUIPMENT

The safety equipment and devices available or in use are listed below:

- Safety Shoes
- Rain Gear
- Boots
- Protective Gloves
- Chemical Aprons
- Chemical Suits
- Face Shields
- Safety Goggles for flying material
- Safety goggles and face shields
- Ear Plugs for noise protection
- Ear Muffs for noise protection
- Sound Level Meter
- First Aid Kits in all vehicles
- First Aid Kits at selected locations
- Disposal First Aid Blankets
- Set of Inflatable Splints
- Basket Stretcher

- Eyewash Stations
- Safety Showers
- ABC Fire Extinguishers
- BC Fire Extinguishers
- Portable Meters for Toxic Gases, Explosive Gases and Oxygen Deficiency
- Emergency Chlorine Leak Repair Kits for Tank Cars
- Self-contained Air Breathing Units
- Low Explosive Limit Sensing Units and Alarms for explosive gas mixtures in process and chemical handling areas

VI-SF-LT LOCKOUT/TAGOUT POLICY AND PROCEDURES

The purpose of Lockout/Tagout policy is for repair, adjustments or process isolation of any equipment that is powered by electricity, compressed air or fluid is a **dangerous** task unless the power source is shut off and locked in that position. The correct use of padlocks eliminates the possibility that equipment is energized during maintenance or repair.

A. LOCKOUT/TAGOUT POLICY

- Tags are to be affixed to energy isolating devices for warning and information, whether or not a lock is used when equipment is shutdown for maintenance or special operating purposes.

- Each crew intending to work on powered equipment will install a padlock on a 6-position lockout device on the energy isolating device after it is opened. The first crew on the job will provide/install the lockout device in addition to his padlock.

- Any tag attached to an energy isolating device must not be removed without authorization of the person attaching it or an appropriate supervisor, and it must **never** be carelessly bypassed, ignored or otherwise defeated.

- Tags must be legible and understandable.

- Tags must be made of materials that will withstand the environmental conditions.

- Tags must be securely attached to energy isolation devices so that they cannot be accidentally detached.

- Tagging devices must warn against hazardous conditions which will occur if the equipment is energized. It must include a legend such as:

DO NOT START	DO NOT OPEN	DO NOT OPERATE
DO NOT ENERGIZE	DO NOT CLOSE	

- Tagout devices must indicate the identity of the employee who attaches the device. Padlocks are to be color coded to indicate the owner's maintenance or operations section.

- Tags, as indicated above, are to be used as a **warning device only** until a padlock can be affixed to the energy isolating device. Tags may be used to isolate equipment that would not cause harm or injury if energized.

B. OUTSIDE CONTRACTORS

When utilizing outside work forces, you must inform the outside employer of Wastewater Treatment Division's Lockout/Tagout program. You must also familiarize yourself and fellow employees with the outside contractor's policies. You must ensure that your employees understand and comply with restrictions and prohibitions of the outside employer's energy control procedures.

C. LOCKOUT/TAGOUT PROCEDURES

The use and control of padlocks are as follows:

- Any worker who services or repairs power driven equipment should have lockout devices, key type padlocks, and warning and information tags.

- Each shop is issued a set of color-coded padlocks, they are as follows:

Yellow - Electrical Shop	Blue - Operations
Red - Plant Maintenance	Black - Power Facilities
Green - Pump Station Maintenance	White - Instrumentation
No color - P.M.	

- Each crew that affixes a lock to a lockout device will also attach a tag to the lock identifying the employee who attached the lock and his reason for locking out the equipment.

- If it becomes necessary to remove a lock from locked out equipment, and the employee who attached the lock is not available, the lock may only be removed by an appropriate supervisor.

D. APPLYING LOCKOUT OR TAGOUT DEVICES

A lockout or tagout device must be affixed to each energy isolating device by the persons performing the lockout/tagout. These must be placed in a manner so that they will hold the energy isolating devices in a "safe" or "off" position.

- If tagout devices are used, they must clearly indicate that the operation or movement of energy isolating devices from the "safe" or "off" position is prohibited.

- If a tag is used temporarily in place of a lock on an energy isolating device that is capable of being locked, the tag must be placed where the lock would have been attached.

- If a tag can be affixed directly to an energy isolating device, it must be located as close as safely possible to the device, in a position that will be immediately obvious to anyone attempting to operate the device.

E. LOCKING OUT ELECTRICAL POWER SOURCES

When shutting off electric current in order to safely work on equipment, several important steps should be followed:

1. When pulling the main disconnect switch, personnel involved should first be warned that power is being turned off. A sudden loss of power could cause an accident.

2. Check to be sure disconnect switch is not under load. Check with electrical shop if in question.

3. To be extra safe, stand to the right of the switch, **never** in front, and pull the lever with your left hand. A switch under high voltage load could arc or cause an explosion when lever is pulled.

4. After shutting off the current, have the electrical maintenance section with proper test equipment, determine that the current is actually off. If equipped, any capacitors should have stored electrical energy discharged to ground by the electrician to assure **Zero Energy.**

5. Attach lockout device and padlock and try to start the equipment to be worked on to assure the power is off.

6. Do not remove lockout device and padlock until repairs are complete. Use proper removal procedures as defined in "Use and Control of Padlocks".

F. LOCKING OUT FLUID, AIR OR STEAM POWER SOURCES

1. If the equipment to be worked on is powered by fluid, air or steam, lockout the supply line valve in the "OFF" position. Insure that a TAG is also used at the valve indicating all hazards and names of employees who have isolated the equipment.

2. Bleed or drain the line between the valve and the equipment to be worked on to insure against any stored pressure in the line that could cause machine movement or partial cycling. If cylinder type device needs to be in the raised or extended position, insure that proper blocking is installed to prevent closing or falling when pressure is relieved.

3. Try to operate the equipment, making sure everyone is clear, to insure it is isolated.

4. Do not remove lockout device and padlock until repairs are complete. Use proper removal procedures as defined in "Use and Control of Padlocks".

G. ADDITIONAL LOCKOUT PRECAUTIONS

1. Locking out one power source may not be enough. Some equipment may use a combination of electric power and air or hydraulic power. It is important that **all** power sources be rendered inoperable.

2. It may be impossible to remember what controls operate what machines or to trace piping or wiring to the power source. It is **very important** to TAG valves and disconnects.

3. Pulling a fuse is no guarantee that the circuit is dead and should never be substituted for locking out. There is no certainty that someone might not replace the fuse.

4. On any machine, such as power presses that have a ram that could fall, a block should be placed beneath the ram. Likewise, latent energy stored in springs or levers should also be secured or blocked off.

VI-SF-RE REFERENCES

"Operation of Wastewater Treatment Plants, " Sacramento State College and California Water Pollution Control Association, 1970.

"Manual of Instruction for Sewage Treatment Plant Operators," New York State Department of Health.

Regulations for Safe Practices (total of 16) State of Florida, Department of Commerce, Bureau of Workman's Compensation,

Industrial Safety Section (110 So. Hoover Street, Suite 206, 272-3710).

"User's Safety Manual,' for Cranes Construction Industry Manufacturers Association.

"City of Tampa Department of Sanitary Sewers Safety Manual."

"Manual of Waste Water Operations, " The Texas Water Utilities Association.

OSHA Safety and Health Standards, U.S. Department of Labor.

VII-UT UTILITIES

A. GENERAL

This chapter contains information on the sources and distribution of the utilities used by the City of Tampa, Howard F. Curren Advanced Wastewater Treatment Plant which include electrical power, gas, telephone services and the City of Tampa potable water.

B. ELECTRICAL POWER

The primary source of electrical power for the Howard F. Curren Advanced Wastewater Treatment Plant is supplied by Tampa Electric Company through a substation located just northwest of the plant on Maritime Blvd. Two cables carrying 13, 200 volts are routed underground to our main switchgear building #1 located due north of the Main Pump Station. The 13.2 kv power is distributed throughout the plant and is delivered to each point of use through transformers that step down the voltage to 480 volts, except at the oxygen generation plants that utilize 4160 volt power.

The responsibility breakpoint in the system occurs at the outdoor switchgear #1 mentioned previously. Any questions about the service or problems encountered on the line back to the substation should be referred to:

Normal business hours:	Mr. Joe Patrick, (813) 228-4558
Emergency TECO numbers:	(813) 239-2757 or (813) 239-2747

The standby power generation equipment currently consists of four caterpillar diesel engine driven generators with individual outputs of 2000kw each. The four caterpillar diesel engines are located in a free standing building on site, northeast of the oxygen generation equipment.

The equipment responsible for sensing undervoltage or loss of power is designated as the 27 relay. The relays on both the TECO feeders will initiate a start signal to the generators only if undervoltage or loss occurs in both lines simultaneously. In the event of a loss or low voltage in one of the feeds the outside tie breaker will engage from its normally open condition to closed and will supply voltage from the active feeder to the feeder with the loss.

In the event of a total loss of TECO power, the 27 relays open, breaking the connection to TECO and send a signal to the generation equipment to initiate the start sequence for the generators. After the diesel engines have started and the generators have come up to voltage and synchronized they are ready to switch to the on-line mode by closing the distribution breakers in the generator building that are normally in the open position. The generated power is then fed to the "A" and "B" feeders back to the outdoor switch gear for further distribution into the plant.

After TECO service has been restored to normal, the generator power is synchronized with the TECO feed and shares the load with the TECO service until the majority of the load is transferred to TECO. At that time the two distribution breakers are opened, dropping the remaining load on the generators and alowing the controls to start the cool down cycle for the diesel engines.

Under normal operating conditions the plant has another important source of power available for use

in the electrical supply. The primary anaerobic digesters produce methane gas which is drawn off and used as fuel for five engine driven generators capable of producing 500kw of power each.

During a power outage these generator units are tripped off line by sensors in switchgear #60 and must be manually restarted after power is restored from TECO or the standby generators. When operating these generators under standard conditions the power that is fed into the system makes a substantial difference in the total electrical load that we are paying for as TECO Customers

C. TELEPHONE SYSTEM

The telephone service utilized by the plant is provided by General Telephone. The service cable enters the plant as an overhead line at the northwest corner of the plant. The line is connected into the underground cable network for all power, telemetry and communications functions.

The telephone system includes phones for interplant outside service and is supplemented with in plant and out of plant radios for communication in areas not supplied with phones. In general the telephones in the plant are utilized for communications between work areas in the plant but can be used for outside calls if programmed for that function. In some cases phones are needed as full functioning numbers and have complete outside access to local and long distance numbers.

The equipment for the telephone system controls and PBX board is supplied by Siemens and is a digital control system with analog capability. Currently we have approximately 110 phones installed throughout the plant with additional lines available lines available by installing switch cards in the processor that increase the available lines by 25 on each programmable card. The computer data and fax lines used in the plant are on separate circuits wired directly to their locations via the underground communication lines. Currently maintenance and repairs are carried out on a contract basis. The following is a current list of phone number for in plant personnel.

D. NATURAL GAS SUPPLY

The Howard F. Curren Plant has at this time two gas supply lines entering the property. The gas is supplied by Peoples Gas Co. (phone (813-272-1501) from a main line running along Guy Verger Blvd. on the east border of the plant sire. The Administration Building has a supply line connection on the north side of the building that consists of a three inch supply line to a meter that feeds the hot water heater and the main laboratory connections.

The second supply line is a six inch line east of the heat drying plant that enters a meter with a four inch bypass line around the meter. After the meter the line increases to eight inches in diameter to feed the heat drying process dryer and the afterburner air pollution control system.

E. CITY WATER

The potable water supply for the Howard F. Curren Advanced Wastewater Treatment Plant is supplied by the City of Tampa Water Department. Water is delivered to the Hookers Point area by a twenty inch water main operating at a nominal 70 psi. The plant has three main connections to the supply to serve the facility. The Maritime Blvd. main enters the plant to the northwest of the Maritime Blvd. gate and is a six inch main with

a meter and backflow preventer. The second connection is an eight inch main entering the sire on the east side from the Gut Verger supply main and also is metered and supplied with a backflow preventer. The third connection which was added at a later date is the connection for the Administration Building and is located at the northeast corner of the site near the parking area. This line is a six inch main with a meter and backflow preventer and serves the needs of the offices and laboratories located in the building. The Water Dept. emergency phone number is (813) 259-1634.

VIII-PE-IN INTRODUCTION

A. GENERAL

The City of Tampa, Howard F. Curren Advanced Wastewater Treatment Plant utilizes the most advanced methods of wastewater treatment technology. The resultant treated wastewater meets all water quality standards and has eliminated one of the major sources of pollution to Tampa Bay.

The key to successful and efficient operation of this facility is providing trained and competent personnel.

This section describes the jobs and qualifications of personnel required to operate and maintain the process and equipment.

B. ORGANIZATION

The organization of the Wastewater Treatment Division is shown in Figure VIII-PE-1. There are three sections including Operations, Technical Services and Maintenance reporting to the Wastewater Treatment Plant Administrator. The Wastewater Treatment Division is part of the Department of Sanitary Sewers.

The Operations section is responsible for the 24 hour-per-day operation of the Howard F. Curren Advanced Wastewater Treatment Plant at Hooker's Point.

The Technical Services Section is responsible for monitoring the waste discharge into the city sewage collection system from the many industrial installations in the Tampa area andspecial studies of sewage content, treatment methods and effects on the environment such as monitoring conditions in Hillsborough Bay.

The Maintenance Section is responsible for the maintenance of the treatment facilities and the operation and maintenance of the city sewage collection system's pump and ejector stations.

The summary of positions for the Wastewater Treatment Division are listed in Table VIII-PE-1. The staffing plan, by shifts, is shown in Table VIII-PE-2.

C. JOB DESCRIPTIONS

The job descriptions which follow in Appendix A describe the duties, responsibilities and necessary qualifications for each position.

TABLE VIII-PE-1 SUMMARY OF POSITIONS FOR WASTEWATER TREATMENT DIVISION

SECTION		ACTIVITY NUMBER	NUMBER OF POSITIONS
(A)	**ADMINISTRATION**	535025	11
(B)	**TECHNICAL SERVICES**		
	Industrial Waste	535025	5
	Bay Study Group	535027	5
	Analytical Laboratory	535032	13
(C)	**PLANT OPERATIONS**	535030	
	Operations Supervision		5
	Shift Operations		52
	Heat Drying		12
(D)	**PLANT MAINTENANCE**		
	Electrical Maintenance	535036	12
	Mechanical Maintenance	535041	15
	Buildings and Grounds Maintenance	535038	23
	Instrument Maintenance	535039	12
	Preventive Maintenance	535040	8
(E)	**PUMPING STATIONS**		
	Pumping Stations Operation	535035	17
	Pumping Stations Mechanical Maintenance	535037	10
	TOTAL		200

TABLE VIII-1-2 STAFFING PLAN BY SHIFTS
WASTEWATER TREATMENT DIVISION

	SECTION/POSITION	DAY/ SHIFT 1	SHIFT 2	SHIFT 3	SHIFT 4	SUB-TOTAL	TOTAL
A.	**ADMINISTRATION - 535025**						
	Wastewater Treatment Plant	1				1	
	Administrator	1				1	
	Wastewater Facility Operations	1				1	
	Manager	1				1	
	Wastewater Facility Maintenance	1				1	
	Manager	1				1	
	Wastewater Technical Supervisor	1				1	
	Administrative Assistant III	1				1	
	Maintenance & Planning Coordinator	1				1	
	Contract & Parts Support Supervisor	1				1	
	Personnel Assistant I	1				1	11
	Accounting Clerk II						
	Clerical Specialist II						
	Management Method Analyst						
B.	**TECHNICAL SERVICES**						
	INDUSTRIAL WASTE - 535026						
	Industrial Waste Division Supervisor	1				1	
	Field Services Technician I	2				2	
	Field Services Technician II	2				2	5
	BAY STUDY GROUP - 535027						
	Environmental Supervisor	1				1	
	Biologist I	2				2	
	Biologist II	2				2	5

TABLE VIII-1-2 STAFFING PLAN BY SHIFTS
WASTEWATER TREATMENT DIVISION

SECTION/POSITION	DAY/ SHIFT 1	SHIFT 2	SHIFT 3	SHIFT 4	SUB-TOTAL	TOTAL
ANALYTICAL LABORATORY - 535052						
Laboratory Supervisor	1				1	
Chemist III	1				1	
Chemist II	3				3	
Chemist I	1				1	
Laboratory Technician II	7				7	13
C. PLANT OPERATIONS - 535030						
OPERATIONS SUPERVISION						
Chief Operator III	2				2	
Chief Operator II	1				1	
Wastewater Operator III	1				1	
Power Facility Supervisor	1				1	5
SHIFT OPERATIONS						
Chief Operator II	1	1	1	1	4	
Chief Operator I	1	1	1	1	4	
Wastewater Operator III	2	2	2	2	8	
Wastewater Operator III	3	3	3	3	12	
Wastewater Operator I	3	3	3	3	12	
Wastewater Operator Trainee	1	1	1	1	3	
Power Facility Operator II	1				1	
Power Facility Operator I	1	1	1	1	4	
Services Crew Supervisor III	1				1	
Auto Equipment Operator III	1				1	
Speciality Equipment Operator	1				1	
Mechanical Technician II	1				1	52
HEAT DRYING						

TABLE VIII-1-2 STAFFING PLAN BY SHIFTS
WASTEWATER TREATMENT DIVISION

	SECTION/POSITION	DAY/ SHIFT 1	SHIFT 2	SHIFT 3	SHIFT 4	SUB-TOTAL	TOTAL
	Chief Operator III	1				1	
	Wastewater Operator III	1				1	
	Wastewater Operator II	1	1	1	1	4	
	Wastewater Operator I	1	1	1	I	4	
	Mechanical Technician III	1				1	
	Mechanical Technician II	1				1	12
D.	**PLANT MAINTENANCE**						
	ELECTRICAL MAINTENANCE - 535036						
	Electrical Maintenance Supervisor	1				1	
	Electrical Maintenance Asst.	1				1	
	Supervisor	10				10	12
	Electrical Technician II						
	MECHANICAL MAINTENANCE - 535041						
	Mechanical Maintenance Supervisor	1				1	
	Mechanical Maintenance Asst.	1				1	
	Supervisor	2				3	
	Mechanical Technician III	5				5	
	Mechanical Technician II	4				4	
	Mechanical Technician I	1				1	15
	Machine Shop Mechanic						

TABLE VIII-1-2 STAFFING PLAN BY SHIFTS
WASTEWATER TREATMENT DIVISION

SECTION/POSITION	DAY/ SHIFT 1	SHIFT 2	SHIFT 3	SHIFT 4	SUB-TOTAL	TOTAL
BLDG. & GRNDS MAINT. - 535038						
Facilities & Grnds. Maint. Supervisor	1				1	
Bldg. Maint. Supervisor I	2				2	
Maintenance Repairer III	3				3	
Maintenance Repairer II	2				2	
Services Crew Supervisor II	1				1	
Services Crew Supervisor I	1				1	
Services Attendant III	2				2	
Services Attendant II	10				10	
Auto Equipment Operator I	I				I	23
INSTRUMENT MAINTENANCE - 535039						
Instrumentation Maintenance Supvr.	1				1	
Instrumentaion Maintenance Asst.	1				I	
Supvr.	10				10	12
Instrumentation Technician II						
PREVENTIVE MAINT. - 535040						
Mechanical Maint. Supervisor	I				1	
Mechanical Technician III	I				I	
Mechanical Technician II	3				3	
Mechanical Technician I	2				2	
Clerical Specialist III	I				1	8

TABLE VIII-1-2 STAFFING PLAN BY SHIFTS
WASTEWATER TREATMENT DIVISION

SECTION/POSITION	DAY/ SHIFT 1	SHIFT 2	SHIFT 3	SHIFT 4	SUB-TOTAL	TOTAL
E. PUMPING STATIONS						
PUMP STATION OPERATION - 535035						
Pumping Station Chief Operation	1				1	
Pumping Station Operator III	1				1	
Pumping Station Operator II	9				9	
Pumping Station Operator I	6				6	17
P. S. MECHANICAL MAINTENANCE						
Mechanical Maint. Supvr.	1				1	
Pump Station Maint. Supvr.	1				1	
Mechanical Technician III	2				2	
Mechanical Technician II	3				3	
Mechanical Technician I	3				3	10
TOTAL POSITIONS						200

VIII-PE-JD JOB DESCRIPTIONS

Job descriptions for each job class listed on Table VIII-PE-2 are included in Appendix A in this section. As job descriptions are changed, added or deleted Appendix A will be modified.

Howard F. Curren

Advanced Wastewater Treatment Plant

OPERATION AND MAINTENANCE MANUAL

◆

VOLUME 3

◆

CITY OF TAMPA

GREELEY AND HANSEN
ENGINEERS

ISSUED TO: ERIC WEISS

SECTION: DSS 6TH FLOOR

FOREWORD

This manual describes the operation and maintenance requirements for the Howard F. Curren Advanced Wastewater Treatment Plant and is divided into five volumes as follows.

Volume 1:	
Chapter I	Introduction
Chapter II	Process Description
Chapter III (Part 1)	Operation and Control
Volume 2:	
Chapter III (Part 2)	Operation and Control
Chapter IV	Laboratory Control
Chapter V	Records
Chapter VI	Safety
Chapter VII	Utilities
Chapter VIII	Personnel
Volume 3:	
Chapter IX	Emergencies
Chapter X	Maintenance
Volume 4:	
Chapters II & III	Figures (11 x 17)

To facilitate use of the manual, a page, table and figure numbering system has been developed to identify chapter, section and page, table or figure number. Refer to section headed "Numbering System" of Chapter I, Introduction, for details.

A general Table of Contents is provided for each volume.

TABLE OF CONTENTS

CHAPTER/SECTION	DESCRIPTION	PAGE
I	**INTRODUCTION**	
I-IN-FW	FOREWORD	I-IN-1
I-IN-MG	USER GUIDE	I-IN-1
I-IN-NS	NUMBERING SYSTEM	I-IN-3
I-IN-PD	PLANT DESCRIPTION	I-IN-7
II	**PROCESS DESCRIPTION**	
II-PD-GN	GENERAL	II-PD-1
II-PD-PR	PRELIMINARY AND PRIMARY TREATMENT	II-PD-6
II-PD-AT	ADVANCED TREATMENT	II-PD-9
II-PD-ST	SLUDGE TREATMENT FACILITIES	II-PD-16
III	**OPERATION AND CONTROL**	
III-GN	**GENERAL**	III-GN-1
III-PR	**PRIMARY FACILITIES**	
III-PR-JC1	JUNCTION CHAMBER AND METER VAULT NO. 1	III-PR-1
III-PR-PST	PRIMARY SEDIMENTATION TANK NOS. 1-8	III-PR-35
III-PR-MSPS	MIXED SLUDGE PUMPING STATION	III-PR-47
III-PR-ADT	ANAEROBIC DIGESTION TANKS (SLUDGE CONTROL)	III-PR-59
III-PR-JC3	JUNCTION CHAMBER NO. 3	III-PR-87
III-PO	**POWER FACILITIES**	
III-PO-RSPS	RAW SEWAGE PUMPING STATION	III-PO-1
III-PO-PG	POWER GENERATION	III-PO-7
III-PO-SPF	STANDBY POWER FACILITY	III-PO-33
III-SG	**SCREENING AND GRIT REMOVAL**	
III-SG-SGB	SCREEN AND GRIT BUILDINGS NO. 1 AND NO. 2	III-SG-1
III-OB	**OXYGEN BIOLOGICAL SYSTEM**	
III-OB-MPS	MAIN PUMPING STATION	III-OB-1
III-OB-OR	OXYGEN REACTORS	III-OB-47
III-OB-JC2	JUNCTION CHAMBER AND METER VAULT NO. 2	III-OB-91
III-OB-IPS	INTERMEDIATE PUMPING STATION	III-OB-99

CHAPTER/SECTION	DESCRIPTION	PAGE
III-OG	**OXYGEN GENERATION AND STORAGE**	
III-OG-OGN & III-OG-OST	OXYGEN GENERATION AND STORAGE EQUIPMENT	III-OG-1
III-DA	**DIFFUSED AIR BIOLOGICAL SYSTEM**	
III-DA-DAR	DIFFUSED AIR REACTORS	III-DA-1
III-DA-BB	BLOWER BUILDING	III-DA-39
III-DA-NPS	NITRIFICATION PUMPING STATION AND JUNCTION CHAMBER NO. 5	III-DA-57
III-FS	**FINAL SEDIMENTATION TANKS**	
III-FS-FST	FINAL SEDIMENTATION TANK NOS. 1-12 AND 13-20	III-FS-1
III-FS-SPS	SLUDGE PUMPING STATION NOS. 1, 2, 3, 4 AND 5	III-FS-37
III-FS-ABP	ACCESS BUILDING AND PIPE TUNNEL	III-FS-69
III-FL	**FILTRATION**	
III-FL-FB	FILTER BUILDINGS NO. 1 AND NO. 2 AND JUNCTION CHAMBER NO. 6	III-FL-1
III-FL-DF	DENITRIFICATION FILTERS	III-FL-61
III-FL-CHF	CHEMICAL HANDLING FACILITIES	III-FL-95
III-FL-ACT	POST AERATION-CHLORINATION TANKS AND JUNCTION CHAMBER NO. 4	III-FL-109
III-FL-DCL	DECHLORINATION FACILITIES	III-FL-121
III-FL-RWPS	RECLAIMED WATER PUMPING STATION	III-FL-135
III-ST	**SLUDGE THICKENING**	
III-ST-STB	SLUDGE TREATMENT BUILDING AND THICKENING TANKS	III-ST-1
III-ST-BTB	BELT THICKENER BUILDING	III-ST-25
III-ST-FBST	FLOATING BIOLOGICAL SOLIDS THICKENER FACILITY	III-ST-55
III-SD	**SLUDGE DEWATERING**	
III-SD-SCB	CONTROL BUILDING AND SLUDGE STORAGE TANKS	III-SD-1
III-SD-SDR	SLUDGE DRYING BEDS	III-SD-21
III-SD-SDW	SLUDGE DEWATERING FACILITY	III-SD-29
III-SD-HDF	SLUDGE HEAT DRYING FACILITY	III-SD-65
III-SD-FPS	FILTRATE PUMPING STATION AND BACKFLOW STRUCTURE	III-SD-109
III-OS	**OVERFLOW STRUCTURE**	III-OS-1

CHAPTER/SECTION	DESCRIPTION	PAGE
III-AD	**ADMINISTRATION**	
III-AD-OMB	MAINTENANCE BUILDING	III-AD-1
III-AD-AB	ADMINISTRATION BUILDING	III-AD-17
III-ES	**ELECTRICAL SYSTEMS**	
III-ES-SWG	13.2 KV METALCLAD SWITCHGEAR	III-ES-1
III-ES-OST	OUTDOOR SUBSTATION TRANSFORMERS	III-ES-9
III-SU	**SITE UTILITY SYSTEMS**	
III-SU-VAL	VALVES	III-SU-1
III-SU-UPS	UTILITY PIPING SYSTEMS [1]	III-SU-9
IV	**LABORATORY CONTROL**	
IV-LC-IN	INTRODUCTION	IV-LC-1
IV-LC-PM	PROCESS MONITORING	IV-LC-2
IV-LC-AC	ANALYSIS OF PURCHASED CHEMICALS	IV-LC-13
IV-LC-IM	INSTRUMENTATION	IV-LC-16
IV-LC-MS	MISCELLANEOUS	IV-LC-18
V	**RECORDS**	
V-RC	RECORDS	V-RC-1
VI	**SAFETY**	
VI-SF-ET	EMERGENCY TELEPHONE NUMBERS	VI-SF-1
VI-SF-GN	GENERAL	VI-SF-1
VI-SF-OH	OCCUPATIONAL HAZARDS AND RISK REDUCTION	VI-SF-2
VI-SF-SW	SPECIAL HAZARDS	VI-SF-13
VI-SF-SE	SAFETY EQUIPMENT	VI-SF-25
VI-SF-LT	LOCKOUT/TAGOUT POLICY AND PROCEDURE	VI-SF-26
VI-SF-RE	REFERENCES	VI-SF-29
VII	**UTILITIES**	
VII-UT	UTILITIES	VII-UT-I

[1] Includes general purpose effluent water, plant water, city water, plant air, and process air systems.

CHAPTER/SECTION	DESCRIPTION	PAGE
VIII	**PERSONNEL**	
VIII-PE-IN	INTRODUCTION	VIII-PE-I
VIII-PE-JD	JOB DESCRIPTIONS	VIII-PE-8
IX	**EMERGENCIES**	
IX-EM-GN	GENERAL	IX-EM-1
IX-EM-EF	ELECTRICAL POWER FAILURE	IX-EM-12
IX-EM-AS	ALARM SYSTEM AND ALARM RESPONSE	IX-EM-16
IX-EM-MF	MECHANICAL EQUIPMENT FAILURE	IX-EM-21
IX-EM-IW	INDUSTRIAL WASTES	IX-EM-22
IX-EM-ER	EMERGENCY FLOW REROUTING	IX-EM-24
IX-EM-SW	SEVERE WEATHER	IX-EM-25
IX-EM-FR	FIRE	IX-EM-26
IX-EM-PI	PERSONAL INJURIES	IX-EM-27
IX-EM-UF	UTILITY FAILURE	IX-EM-27
IX-EM-EE	EMERGENCY EQUIPMENT INVENTORY	IX-EM-28
IX-EM-PP	PLANT PERSONNEL AND EMERGENCY RESPONSE CENTER	IX-EM-29
IX-EM-CO	COORDINATION OF POLICE/FIRE DEPARTMENTS	IX-EM-31
IX-EM-ET	EMERGENCY TELEPHONE NUMBERS	IX-EM-21
X	**MAINTENANCE**	
X-PR	**PRIMARY FACILITIES**	
X-PR-JC1	JUNCTION CHAMBER AND METER VAULT NO. 1	X-PR-1
X-PR-PST	PRIMARY SEDIMENTATION TANK NOS. 1-8	X-PR-28
X-PR-MSPS	MIXED SLUDGE PUMPING STATION	X-PR-45
X-PR-ADT	ANAEROBIC DIGESTION TANKS (SLUDGE CONTROL)	X-PR-51
X-PR-JC3	JUNCTION CHAMBER NO. 3	X-PR-76
X-PO	**POWER FACILITIES**	
X-PO-RSPS	RAW SEWAGE PUMPING STATION	X-PO-1
X-PO-PG	POWER GENERATION	X-PO-18
X-PO-SPF	STANDBY POWER FACILITY	X-PO-26
X-SG	**SCREENING AND GRIT REMOVAL**	
X-SG-SGB	SCREEN AND GRIT BUILDINGS NO. 1 AND NO. 2	X-SG-1

TABLE OF CONTENTS

CHAPTER/SECTION	DESCRIPTION	PAGE
X-OB	**OXYGEN BIOLOGICAL SYSTEM**	
X-OB-MPS	MAIN PUMPING STATION	X-OB-1
X-OB-OR	OXYGEN REACTORS	X-OB-36
X-OB-JC2	JUNCTION CHAMBER AND METER VAULT NO. 2	X-OB-48
X-OB-IPS	INTERMEDIATE PUMPING STATION	X-OB-53
X-DA	**DIFFUSED AIR BIOLOGICAL SYSTEM**	
X-DA-DAR	DIFFUSED AIR REACTORS	X-DA-1
X-DA-BB	BLOWER BUILDING	X-DA-11
X-DA-NPS	NITRIFICATION PUMPING STATION AND JUNCTION CHAMBER NO. 5	X-DA-25
X-FS	**FINAL SEDIMENTATION TANKS**	
X-FS-FST	FINAL SEDIMENTATION TANK NOS. 1-12 AND 13-20	X-FS-1
X-FS-SPS	SLUDGE PUMPING STATION NOS. 1, 2, 3, 4 AND 5	X-FS-7
X-FS-ABP	ACCESS BUILDING AND PIPE TUNNEL	X-FS-22
X-FL	**FILTRATION**	
X-FL-FB	FILTER BUILDINGS NO. 1 AND NO. 2 AND JUNCTION CHAMBER NO. 6	X-FL-1
X-FL-DF	DENITRIFICATION FILTERS	X-FL-65
X-FL-CHF	CHEMICAL HANDLING FACILITIES	X-FL-70
X-FL-ACT	POST AERATION-CHLORINATION TANKS AND JUNCTION CHAMBER NO. 4	X-FL-75
X-FL-DCL	DECHLORINATION FACILITIES	X-FL-82
X-FL-RWPS	RECLAIMED WATER PUMPING STATION	X-FL-91
X-ST	**SLUDGE THICKENING**	
X-ST-STB	SLUDGE TREATMENT BUILDING AND THICKENING TANKS	X-ST-1
X-ST-BTB	BELT THICKENER BUILDING	X-ST-16
X-ST-FBST	FLOATING BIOLOGICAL SOLIDS THICKENER FACILITY	X-ST-29
X-SD	**SLUDGE DEWATERING**	
X-SD-SCB	CONTROL BUILDING AND SLUDGE STORAGE TANKS	X-SD-1
X-SD-SDR	SLUDGE DRYING BEDS	X-SD-13
X-SD-SDB	SLUDGE DEWATERING FACILITY	X-SD-14
X-SD-HDF	SLUDGE HEAT DRYING FACILITY	X-SD-40
X-SD-FPS	FILTRATE PUMPING STATION	X-SD-114
X-OS	**OVERFLOW STRUCTURE**	X-OS-1

CHAPTER/SECTION	DESCRIPTION	PAGE
X-AD	**ADMINISTRATION**	
X-AD-OMB	MAINTENANCE BUILDING	X-AD-1
X-AD-AB	ADMINISTRATION BUILDING	X-AD-16
X-ES	**ELECTRICAL SYSTEMS**	
X-ES-SWG	13.2 KV METALCLAD SWITCHGEAR	X-ES-1
X-ES-OST	OUTDOOR SUBSTATION TRANSFORMERS	X-ES-3

IX-EM-GN GENERAL

A. INRODUCTION

The Emergencies Section describes emergency conditions that may arise from power failure, alarms, mechanical equipment failure, industrial wastes, hydraulic overloading, severe weather, fire, personal injuries, and utility failure. Measures for handling emergencies are suggested and other pertinent information is included to help maintain or restore stable and/or efficient operation of the treatment plant.

B. MUTUAL-AID AGREEMENTS

The City of Tampa Department and Sanitary Sewers has entered into Mutual-Aid Agreements with the following agencies:

- Department of Public Works
- Police Department
- Water Department
- Fire Department

The Department of Sanitary Sewers and the above agencies have agreed to support each other during emergency conditions. Copies of the Mutual-Aid Agreements are shown in Appendix A.

C. VULNERABILITY ANALYSIS

The Department of Sanitary Sewers has prepared a vulnerability analysis for the Howard F. Curren Advanced Wastewater Treatment Facility. The vulnerability analysis is summarized on the Vulnerability Analysis Work Sheets shown in Appendix B.

APPENDIX A

MUTUAL-AID AGREEMENT

EMERGENCY SITUATIONS COULD ARISE IN THE CITY OF TAMPA'S WASTEWATER TREATMENT SYSTEM THAT WOULD REQUIRE ASSISTANCE FROM ANOTHER CITY DEPARTMENT TO RESTORE NORMAL OPERATION.

IF AN EMERGENCY SITUATION ARISES IN THE CITY OF TAMPA WASTEWATER TREATMENT SYSTEM OR PUBLIC WORKS DEPARTMENT, THE OFFICIALS OF BOTH DEPARTMENTS AGREE TOSUPPORT EACH OTHER DURING THE EMERGENCY.

EACH DEPARTMENT HAS A CONTINGENCY PLAN FOR RESPONSE TO EMERGENCIES. THE DEPARTMENT OF PUBLIC WORKS AGREES TO SUPPORT THE DEPARTMENT OF SANITARY SEWERS IN THE FOLLOWING AREAS:

(1) EMERGENCY REPAIR CREWS AND EQUIPMENT; (2) COMMUNICATIONS;

(3) REPAIR MATERIALS; TO THE EXTENT POSSIBLE UPON REQUEST INITIATED BY:

R. L. Metcalf, II	J. Morriss
Name	Name
Director	Director
Title	Title
Dept. of Sanitary Sewers	Dept. of Public Works
Dept.	Dept.

PERSONNEL RESPONDING TO THE REQUESTS FOR ASSISTANCE UNDER THIS AGREEMENT WILL REMAIN UNDER THE CONTROL OF THE CITY DEPARTMENT PROVIDING THEM.

Signed	Signed
R. L. Metcalf, II	J. Morriss
Name	Name
Director	Director
Title	Title
Dept. of Sanitary Sewers	Dept. of Public Works
Dept.	Dept.

APPENDIX A (Continued)

MUTUAL-AID AGREEMENT

EMERGENCY SITUATIONS COULD ARISE IN THE CITY OF TAMPA'S WASTEWATER TREATMENT SYSTEM THAT WOULD REQUIRE ASSISTANCE FROM ANOTHER CITY DEPARTMENT TO RESTORE NORMAL OPERATION.

IF AN EMERGENCY SITUATION ARISES IN THE CITY OF TAMPA WASTEWATER TREATMENT SYSTEM, THE OFFICIALS OF BOTH OF THE DEPARTMENTS HEREIN BELOW NAMED AGREE TO SUPPORT EACH OTHER DURING THE EMERGENCY.

EACH DEPARTMENT HAS A CONTINGENCY PLAN FOR RESPONSE TO EMERGENCIES. THE TAMPA POLICE DEPARTMENT AGREES TO SUPPORT THE DEPARTMENT OF SANITARY SEWERS IN THE FOLLOWING AREAS: (1) PROTECTION AGAINST CIVIL DISORDER; (2) ENFORCEMENT OF CITY ORDINANCES WHICH IF NOT ENFORCED COULD LEAD TO EMERGENCY CONDITIONS IN THE TREATMENT SYSTEM; (3) TRAFFIC CONTROL AND AREA SECURITY; TO THE EXTENT POSSIBLE UPON REQUEST INITIATED BY:

R. L. Metcalf, II	B. Holder
Name	Name
Director	Chief of Police
Title	Title
Dept. of Sanitary Sewers	Tampa Police Department
Dept.	Dept.

PERSONNEL RESPONDING TO THE REQUESTS FOR ASSISTANCE UNDER THIS AGREEMENT WILL REMAIN UNDER THE CONTROL OF THE CITY DEPARTMENT PROVIDING THEM.

Signed	Signed
R. L. Metcalf, II	B. Holder
Name	Name
Director	Chief of Police
Title	Title
Dept. of Sanitary Sewers	Tampa Police Department
Dept.	Dept.

APPENDIX A (Continued)

MUTUAL-AID AGREEMENT

EMERGENCY SITUATIONS COULD ARISE IN THE CITY OF TAMPA'S WASTEWATER TREATMENT SYSTEM THAT WOULD REQUIRE ASSISTANCE FROM ANOTHER CITY DEPARTMENT TO RESTORE NORMAL OPERATION.

IF AN EMERGENCY SITUATION ARISES IN THE CITY OF TAMPA WASTEWATER TREATMENT SYSTEM OR THE CITY OF TAMPA WATER SYSTEM. THE OFFICIALS OF BOTH OF THE DEPARTMENTS HEREIN BELOW NAMED AGREE TO SUPPORT EACH OTHER DURING THE EMERGENCY.

EACH DEPARTMENT HAS A CONTINGENCY PLAN FOR RESPONSE TO EMERGENCIES. THE WATER DEPARTMENT AGREES TO SUPPORT THE DEPARTMENT OF SANITARY SEWERS IN THE FOLLOWING AREAS: (1) EMERGENCY REPAIR CREWS AND EQUIPMENT; (2) EMERGENCY CHEMICAL NEEDS; (3) COMMUNICATIONS; (4) OPERATION AND MAINTENANCE PERSONNEL; TO THE EXTENT POSSIBLE UPON REQUEST INITIATED BY:

R. L. Metcalf, II	Dave Tippin
Name	Name
Director	Director
Title	Title
Dept. of Sanitary Sewers	Water Department
Dept.	Dept.

PERSONNEL RESPONDING TO THE REQUESTS FOR ASSISTANCE UNDER THIS AGREEMENT WILL REMAIN UNDER THE CONTROL OF THE CITY DEPARTMENT PROVIDING THEM.

Signed	Signed
R. L. Metcalf, II	Dave Tippin
Name	Name
Director	Director
Title	Title
Dept. of Sanitary Sewers	Water Department
Dept.	Dept.

APPENDIX A (Continued)

MUTUAL-AID AGREEMENT

EMERGENCY SITUATIONS COULD ARISE IN THE CITY OF TAMPA'S WASTEWATER TREATMENT SYSTEM THAT WOULD REQUIRE ASSISTANCE FROM ANOTHER CITY DEPARTMENT TO RESTORE NORMAL OPERATION.

IF AN EMERGENCY SITUATION ARISES IN THE CITY OF TAMPA WASTEWATER TREATMENT SYSTEM, THE OFFICIALS OF BOTH DEPARTMENTS AGREES TO SUPPORT EACH OTHER DURING THE EMERGENCY.

EACH DEPARTMENT HAS A CONTINGENCY PLAN FOR RESPONSE TO EMERGENCIES. THE TAMPA FIRE RESCUE DEPARTMENT AGREES TO SUPPORT THE DEPARTMENT OF SANITARY SEWERS IN THE FOLLOWING AREAS: (1) HAZARDOUS MATERIAL RELEASES; (2) FIRE RESCUE; (3)TRAINING; TO THE EXTENT POSSIBLE UPON REQUEST INITIATED BY:

R. L. Metcalf, II	P. Botto
Name	Name
Director	Fire Chief
Title	Title
Dept. of Sanitary Sewers	Tampa Fire Rescue Department
Dept.	Dept.

PERSONNEL RESPONDING TO THE REQUESTS FOR ASSISTANCE UNDER THIS AGREEMENT WILL REMAIN UNDER THE CONTROL OF THE CITY DEPARTMENT PROVIDING THEM.

Signed	Signed
R. L. Metcalf, II	P. Botto
Name	Name
Director	Fire Chief
Title	Title
Dept. of Sanitary Sewers	Tampa Fire Rescue Department
Dept.	Dept.

APPENDIX B

VULNERABILITY ANALYSIS WORKSHEET

TREATMENT SYSTEM: CITY OF TAMPA, HOWARD F. CURREN AWT PLANT

ASSUMED EMERGENCY: Hurricane, flooding condition, high winds, gasoline spill

DESCRIPTION OF EMERGENCY: The flooding (100 yr. flood) and winds associated with a hurricane will close roads, flood buildings, and cause loss of utilities.

SYSTEM COMPONENT	Effects of Emergency Type and Extent	PREVENTATIVE MEASURES TAKEN OR PREVENTATIVE RECOMMENDATIONS	
Collection Lines			
(1)	River and Channel Crossings Hurricane Conditions	(1)	Not enough force to wash out.
(2)	Excessive inflow due to flooding conditions	(2) (a)	RaisEmanhole covers above flood Televations where possible.
		(b)	Eliminate all illegal Stormwater connections.
Pumping Stations			
(1)	High water and flooding	(1)	Sandbag entrances to pump rooms to prevent flooding.
(2)	Power failure	(2) (a)	Standby power provided at key stations by generator or dual power lines.
		(b)	Alarm system installed all stations to indicate high water.
		(c)	Adequate sump pumps in drywells.

APPENDIX B (CONTINUED)

VULNERABILITY ANALYSIS WORKSHEET

SYSTEM COMPONENT — Effects of Emergency Type and Extent	PREVENTATIVE MEASURES TAKEN OR PREVENTATIVE RECOMMENDATIONS
Communication Telephone lines down.	(1) Have two dedicated radio frequencies. (2) Have emergency phone system. (3) Have mobile and base station radios.
Personnel Personnel isolated at plant and at home due to high water.	(1) Select alternate routes to plant. (2) Provide supplies for stranded persons. (3) Provide auxiliary standby personnel. (4) Coordinate executional mutual-aid agreements.
Primary Plant (1) Power Failure (2) Flooding (3) Combustible Gas	(1) Dual and generated power supplied. (2) Sandbag low entrances. (3) (a) Alarm protected. (b) Primary tanks provided w/skimming system.

APPENDIX B (Continued)

VULNERABILITY ANALYSIS WORKSHEET

SYSTEM COMPONENT	Effects of Emergency Type and Extent	PREVENTATIVE MEASURES TAKEN OR PREVENTATIVE RECOMMENDATIONS
Junction Chamber #1	(1) Power Failure (2) Flooding (3) Combustible Gas	(1) (a) Has dual power. (b) Essential gates can be opened by hand if necessary. (2) Sandbag entrances to meter vault. (3) Protected by alarm system.
Screen & Grit Bldg. #1 & #2	(1) Power Failure (2) Flooding (3) Combustible Gas	(1) (a) Dual power provided. (b) Bar screens and gates can be operated manually. (2) Sandbag entrance to switch gear. (3) (a) Protected by alarm system. (b) Bypass to primary tanks. (c) Non-explosion proof equipment shuts down.

APPENDIX B (Continued)

VULNERABILITY ANALYSIS WORKSHEET

SYSTEM COMPONENT — Effects of Emergency Type and Extent	PREVENTATIVE MEASURES TAKEN OR PREVENTATIVE RECOMMENDATIONS
<u>Main Plant Pumping Station</u> (1) Power Failure (2) Flooding (3) Combustible Gas	(1) Dual Power plus generators. (2) (a) Sandbag all entrances. (b) Board glass windows. (3) (a) Protected by alarm. (b) Sewage may be bypassed to Cl_2 Contact Chamber. (c) Exhaust fans will evacuate wetwell combustibles.
<u>Pure Oxygen Reactors</u> (1) Power Failure (2) Flooding (3) Combustible Gas	(1) Dual power and generators supplies. (2) Does not pose problem. (3) (a) Alarm protected. (b) O_2 Plant vents to atmosphere. (c) Purge air system is engaged. (d) Mechanical equipment shuts down.

APPENDIX B (Continued)

VULNERABILITY ANALYSIS WORKSHEET

SYSTEM COMPONENT	Effects of Emergency Type and Extent	PREVENTATIVE MEASURES TAKEN OR PREVENTATIVE RECOMMENDATIONS
Oxygen Generation Facilities	(1) Power Failure (2) Flooding	(1) (a) Dual power supplied. (b) Liquid O_2 storage. (2) Area should be protected by dikes and pumps.
Intermediate Pumping Station	(1) Power Failure (2) Flooding	(1) Dual and generator power supplied. (2) High enough not to flood vital parts.
Return Sludge Pump Stations	(1) Power Failure (2) Flooding	(1) Dual and generator power supplied. (2) All entrances should be sand bagged.
Final Clarifiers	(1) Power Failure (2) Flooding and High Flows	(1) Dual and generated power supplied. (2) (a) Open all available clarifiers for use. (b) Some bypass may be necessary.

APPENDIX B (Continued)

VULNERABILITY ANALYSIS WORKSHEET

SYSTEM COMPONENT — Effects of Emergency Type and Extent	REVENTATIVE MEASURES TAKEN OR PREVENTATIVE RECOMMENDATIONS
Denitrification Filter Bldg. (1) Power Failure (2) Flooding and high Flows	(1) Dual and generated power supplied (2) (a) Open all available filters (b) Some bypass may be necessary (c) Sandbag all entrances
Chlorination System (1) Power Failure (2) Flooding and High flows	(1) Dual and generated power supplied (2) (a) All channels open (b) Stock adequate supply of Chlorine for the storm (c) Tie down all rail cars in position if possible
Dechlorination System (2) Flooding and High flows	(1) Dual and generated power supplied (2) Maintain adequate inventory (a) Tie down rail cars in position if possible
Sludge Handling	Dual and generated power available if needed
Power Supply Temporarily interrupted due to transmission lines down	(1) Provide dual power from TECO (2) Provide emergency generators (3) Provide tie breaker system on dual supply

IX-EM-EF ELECTRICAL POWER FAILURE

In the event of power failure, enough flexibility in the electrical system has been provided to insure that the treatment process can continue with no serious consequences.

A. TOTAL LOSS OF POWER

In event both power lines supplying the plant fail and all generators fail, Tampa Electric Company should be notified immediately and the operator should make all attempts to start the generation equipment. During this time the electricians on call should also be summoned to the plant to begin trouble-shooting the system.

If the power failure is of sufficient duration that water damage to equipment will occur, then and only then as a last resort, the Plant Manager will have to make the decision of whether to bypass or sustain the damage. The possibility of bypass is very unlikely, and considering the capacity of the stand-by generators on hand, the plant should be capable of maintaining near normal operation during TECO power outages.

To maintain the treatment process during a loss of power from TECO some load shedding may be necessary to maintain operation of essential process equipment.

When power is restored and TECO confirms power is then stable , then and only then all equipment should be restarted in the proper sequence after reactivating Tampa Electric Company Service.

B. LOSS OF PURCHASED POWER

This first case will deal with a momentary power interruption of less than five (5) seconds. When a power loss of less than five seconds occurs, all operating electrical equipment will stop, however, the generators will not begin the starting sequence.

Upon restoration of power some equipment will restart automatically, however, the balance of the equipment must be manually restarted. (Refer to Table III-II-9 in Chapter III, Section II for equipment which will automatically restart.)

When a power failure of this type occurs the operator should contact Tampa Electric Company to determine the stability of the power supply.

The next category of power failure is the sustained power interruption of 0 to 2 minutes. As in the previous condition all operating electrical equipment will stop.

After five to ten seconds the standby generators will begin the starting sequence. After approximately forty five seconds the generators should be up to speed and assume the automatic restart load (see Table III-II-9 in Chapter III, Section II).

Tampa Electric Company should be called to review the situation. When the operator is assured that the Teco system is stable, he should then restore the normal service and restart the plant equipment.

The third case to consider is the sustained power interruption of greater than two minutes. Again, all operating electrical equipment will ease to operate and the standby generation equipment will start after five to ten seconds and assume the automatic restart load.

Tampa Electric Company should be contacted to review the situation. Should TECO indicate that the system will not be stable for some time, the operators would then proceed to manually restart equipment in accordance with Table IX-EM-EF-1, Priority equipment Restart Schedule.

TABLE IX-EM-EF-1 - EQUIPMENT PRIORITY RESTART SCHEDULE (START UP)

LOCATION	RATING	NAME	QUAN-TITY	OPERATING HP	PRIORITY
Raw Sewage	High	Emergency Generators	5		
Pumping Station	High	Primary Plant	1		
Filter Building	High	Effluent Water Pump	1	200	
	High	Chlorine Solution Water Pump	1	50	
Main Plant	High	Process Blowers	1	400	
Pumping Station	Medium	Plant Water Pump	1	10	
	Low	Supply Fans MP-S-6, 7, 8, 3		15	
	Low	Exhaust Fan	1	1/2	
	Low	Sewage Sampler Pump	1	1/2	
Reactors	High	Mechanical Aerators	16	1,380	
Return Sludge Pumping Station	High	Return SludgePump 3 @ 75 hp	3	225	
	High	3 @ 125 hp	3	375	
	High	Sludge Collector Drives	24	12	
Screen and Grit	Medium	Screen Conveyor	1	2	
Building No. 2	Medium	Grit Washers	1	3	
	Medium	Grit Pumps	2	40	

LOCATION	RATING	NAME	QUAN-TITY	OPERATING HP	PRIORITY
	Medium	Grit Collectors	2	4	
	Low	Exhuast Fans	5	25	

During a power outage of this type it may be desirable if the power is to be off for a long duration to dump noncritical loads which have restarted automatically. Refer to Table IX-EM-EF-2 for nonessential loads which may be turned off.

TABLE IX-EM-EF-2 - NONESSENTIAL LOADS WHICH RESTART AUTOMATICALLY

LOCATION	NAME	QUAN-TITY	HP EACH	OPERATING HP	REMARKS
Screen and Grit Builing No. 2	Lighting, unnecessary	--	--	20 kw	Turned on estimated
Main Pumping Station	Main Sewage Pumps MP-MSP-1, 2, 5, 6 & 7	3	300	900	After an initial time delay and in a time delay sequence, run pumps maximum
	*Chilled Water Pump MP-CHP-1	1	5	5	Summer
	*Chiller MP-CH-1	1	100	100	Summer
	*Air Conditioning Units MP-AC-2 & 3	3	2 @ 7-1/2 2 @ 1-1/2	16.5	
	*Return Air Fans MP-R-1, 2 & 3	5,3 & 1	9	9	
	*Electric Heaters HP-EH-1, 2 & 3	3	2 @ 30 kw	30	Summer
	Lighting, unnecessary	--	--	5	Turned on estimated
Maintenance Building	Air Conditioning Units OM-AC-1 & 2	2	125	200	Thermostat controlled estimated

LOCATION	NAME	QUAN-TITY	HP EACH	OPERATING HP	REMARKS
Maintenance Building	Exhaust Fans OM-E-1 through 5 and OM-REF-1 through 7, 9 & 12	14	1/3	5	
	Heating and Ventilating, Units OM-HV-1 & 2	2	--	--	Thermostat controlled, summer estimated
	Duct Heaters OM-EH-1 through 13	13	AV 10 kw	40	Thermostat controlled, estimated summer
	Lighting, unnecessary	--	--	50 kw	Estimated
Filter Building	Condenser Compressor F-CD-1	1	40 kw	35 kw	Thermostat controlled, estimated
	Electric Duct Heaters F-RH-1 & 2	2	9 & 15 kw	15 kw	Thermostat controlled, summer estimated
	Unit Heaters F-RH-1 & 2	2	10 kw	10 kw	Thermostat controlled, estimated summer
	Lighting, unnecessary	--	--	40 kw	Turned on estimated
Junction Chamber No. 1	Lighting, unnecessary	--	--	5 kw	Turned on estimated
Sludge Treatment Facilities	Lighting, unnecessary	--	--	20 kw	Turned on estimated
Primary Treatment Plant**	TOTAL	--	--	200 kw	Estimated; detailed equipment not known
SUM TOTAL				2,504.66	

* May have to be restarted if temperature in the he Motor Control Center rises to 100 degrees F.
** Power will be supplied by existing emergency generators.

If one of the 13.8 kv incoming TECO power lines is lost, all equipment on that side of the bus will stop. At this time TECO should be notified.

After a short time delay the main breaker opens. The tie breaker will then close automatically restoring power to the side of the bus experiencing the power loss. Again, some equipment will restart automatically and the remainder must be manually restarted.

At this time it will be necessary to do whatever is necessary to do whatever is necessary to make repairs to the broken feeder and transfer the load back to that side of the bus when power is restored.

C. LOSS OF ON-SITE GENERATED POWER

Loss of one or more of the standby generators will not affect operations with TECO power available.

Efforts should be made to repair the out of service generator units as soon as possible to maintain our systems maximum capacity.

When TECO power is interrupted and one or more generators is out of service, it will be necessary to restart equipment according to the priority given in Table 1X-EM-EF-2. The load must not exceed the capacity of the remaining generators. When TECO power is interrupted, all noncritical loads must be taken off line before critical equipment is restarted.

Loss of all standby generators does not affect the treatment processes when the TECO system is functioning properly. A top priority should be given to repair and return the generators to standby service.

When all generators fail when TECO power is interrupted, refer to the subsection headed " Total Loss of Power" above.

IX-EM-AS ALARM SYSTEM AND ALARM RESPONSE

A. GENERAL

All alarms are transmitted to local annunciator panels in each facility. All alarm, equipment status indicators, and analog signals are received by RTU'S in each operating area. These digital and analog signals are transmitted to the SCADA computer located at the Process Control area of the Main Pumping Station. All information is displayed in report and graphic format on the computer monitors. All alarms are displayed and also printed out on a printer. Operators interface with the computer operator to respond to alarm conditions in the plant.

B. WATER LEVEL ALARMS

Water level alarms are provided in various locations in the he treatment plant to alarm the water level conditions shown in Table IX-EM-AS-1.

TABLE IX-EM-AS-1 - WATER LEVEL ALARMS

LOCATION	TYPE	PRIMARY DEVICE
Junction Chamber No. 1	High	Bubbler Tube
Junction Chamber No. 2	High	Bubbler Tube
Screen and Grit Building No. 2, Inlet ad Outlet Channels for Bar Screens	High, Low Differential	Bubbler Tube
Main Pumping Station Wet Well	High, Low	Bubbler Tube
Intermediate Pumping Station Wet Well	High, Low	Bubbler Tube
Scum Pump Inlet, Main Pumping Station	High	Differential Pressure Transmitter
Scum Pump Inlet, Meter Vault No. 1	High	Differential Pressure Transmitter
Dewatering Pump Inlet, Main Pumping Station	High	Differential Pressure Transmitter
Dewatering Pump Inlet, Sludge Treatment Building	High	Differential Pressure Transmitter
Each Denitrification Filter	High	Bubbler Tube
Digested Sludge Storage	High	Utrasonic Echo Sensor Type Level Transmitter
All Sump Pumps Sumps	High	Bell Chamber, Compressed Air, Pressure Type Alarm
All Methanol and Chemical Storage Tanks	High	Differential Pressure Transmitter
Mixed Sludge Pumping Station	High, High/High	
Nitrification Pumping Station Discharge Channel	High Level Alarm	Bubbler System Probe
Intermediate Pumping Station	High/Low Level Alarm	Bubbler System and Software Points to SCADA
Nitrification Pumping Station	High/Low Level Alarm	Bubbler System and Software Points to SCADA

Water level alarms are generally caused by incorrect positioning of sluice gates or control valves, failure of automatic pump control systems or clogging of sewage screens.

Corrective action will be necessary when a water level alarm is received. If the water alarm is due to positioning of sluice gates or control valves, the operator should make every attempt to immediately position the valves or gates properly.

If the water alarm is caused by failure of automatic pump controls or a bubbler system, the pumps may be operated with manual controls. The automatic pump control system should be repaired as soon as possible and the pumping equipment returned to automatic control.

C. COMBUSTIBLE GAS ALARMS

Combustible gas detectors and alarms are provided in screen channels, wet wells, grit pumping areas, reactors, and methanol handling areas. The locations of detectors are given in Table IX-EM-AS-2.

TABLE IX-EM-AS-2 - COMBUSTIBLE GAS DETECTORS

LOCATION	NUMBER OF SENSORS
Forty Third St. Pumping Station Wet Well	1
Krause Street Pumping Station Wet Wells	1
Main Plant Pumping Station Wet Well	1
Raw Sewage Pumping Station Wet Wells	1
San Carlos Pumping Station Wet Well	1
Ybor City Pumping Station Wet Well	1
East Tampa Pumping Station Wet Well	1
Junction Chamber No.	1
Screen and Grit Building No. 1	7
Screen and Grit Building No. 2	5
Reactors	2
Methanol Handling Areas	5
Generator Building	3
Sludge Control Building A	2
Sludge Control Building B	1

All areas protected by combustible gas detection sensors are no-smoking areas. Use no open flames or equipment not rated for use in hazardous locations. (See Chapter VI, Safety for Proper Equipment Selection.)

Each combustible gas detection sensor continuously monitors the atmosphere in its associated facility for the presence of combustible gases. Each sensor will initiate an alarm when a combustible gas level equal to 25 percent of the Lower Explosive Limits (LEL) is detected.

Each combustible gas detection sensor will initiate a second alarm when a combustible gas level equal to 50 percent LEL is detected. Many possibilities exist for the entrance of combustible material into the sewer system. Oil or gasoline usually will enter the sewer either through a direct spill or seepage from an underground tank migrating through the ground to a joint in a sewer pipe. The latter can be a very serious problem for a long time and very hard to find. Combustible materials may also enter the sewer lines through spills of hydrocarbons such as alcohols or industrial solvents.

Sources of combustible gas are detected first at either Krause Street Pumping Station, San Carlos Pumping Station, Ybor City Pumping Station, East Tampa Pumping Station, Forty Third St. Pumping Station, or the Raw Sewage Pumping Station. When a combustible gas level is indicated and alarmed (above 25 percent LEL) on the SCADA System; notify Instrumentation and Industrial Waste personnel.

Operating personnel dispatched to Junction Chamber No. 1 should visually determine if source of combustible gas is floating or dispersed in water.

If source of combustible gas is dispersed in water, divert all flow directly to Main Pumping Station Wet Well (via Screen and Grit Buildings No. 1 and No. 2). Close reactors influent channel sluice gates and bypass all flow to the post aeration-chlorination tanks until it has been determined that the source of the combustible gas is no longer present.

NOTE

Ventilation systems in Screen and Grit Building No. 2 and Main Pumping Station. Wet Well must function as described in Chapter III, Operation and Control.

If the source of combustible gas enters reactors, the associated combustible gas detection equipment will at 25 percent LEL shut off pure oxygen supply and purge the air space above the mixed liquor with process air.

Mechanical aerators will shut down at 50 percent LEL. See section headed " Reactors " in Chapter III, Operation and Control for detailed operation of reactor's combustible gas detection equipment.

When a combustible gas alarm is received from the Methanol Storage and Handling Area, a leak or spill of methanol is usually indicated.

NOTE

Methanol is toxic (see Chapter VI, Safety)

All personnel should be evacuated from the area immediately and the Fire Department notified immediately. Qualified personnel using protective equipment should be dispatched to the area to determine the source of the alarm. All associated equipment will automatically shut down (see section headed " Chemical Handling Facilities " of Chapter III, Operation and Control).

D. CHLORINE GAS ALARM

Chlorine gas detectors and alarms are provided in the chlorine room. Chlorine gas is an extremely hazardous material The Fire Department is to be called immediately.

It is essential that the cause and extent of any chlorine leakage be determined as quickly as possible and the leak sealed (refer to Chapter VI, Safety). If the release of chlorine is sufficient, personnel not assigned to that particular area should be evacuated as well as anyone which might be traveling through that area.

Anyone working in the area of the chlorine leak should be using suitable breathing equipment and protective clothing. Actual leak detection and control is discussed in the Safety Chapter. This will also include use of chlorine kits for tank cars.

If a person has been exposed to chlorine, appropriate first aid must be administered immediately. The following preliminary measures may be applied until a physician orders specific treatment:

(1) EYES

Even if only a small quantity of chlorine has entered the eyes, the eyelids should be held apart and the eyes flushed liberally with lukewarm water for 10-15 minutes.

(2) SKIN

If a person has come in contact with chlorine on their skin, they should be place under a shower immediately, their clothes removed while under the shower and large quantities of soap and water should be used to scrub the chlorine from the skin. Under no circumstances should any chemicals be used to try to neutralize the chlorine as this may have a more harmful effect.

(3) INHALATION

If the person is breathing he should be placed in a comfortable position and should be kept warm. If the person has stopped breathing, artificial respiration must be started immediately. This should be done by one of the employees trained in the CPR program. In an instance

where appreciable chlorine inhalation has taken place, the person should be taken to the hospital for treatment.

E. SULFUR DIOXIDE GAS ALARM

Sulfur dioxide gas detectors and alarms are provided in the sulfur dioxide room. Sulfur dioxide is an extremely hazardous material. The Fire Department is to be called immediately.

It is essential that the cause and extent of any sulfur dioxide leakage be determined as quickly as possible and the leak sealed (refer to Chapter VI, Safety). If the release of sulfur dioxide is sufficient, personnel not assigned to that particular area should be evacuated as well as anyone which might be traveling through that area.

Anyone working in the area of the sulfur dioxide leak should be using suitable breathing equipment and protective clothing. Actual leak detection and control is discussed in the Safety Chapter. This will also include use of sulfur dioxide kits for tank cars.

If a person has been exposed to chlorine, appropriate first aid must be administered immediately. The following preliminary measures may be applied until a physician orders specific treatment:

(1) EYES

Even if only a small quantity of sulfur dioxide has entered the eyes, the eyelids should be held apart and the eyes flushed liberally with lukewarm water for 10-15 minutes.

(2) SKIN

If a person has come in contact with sulfur dioxide on their skin, they should be place under a shower immediately, their clothes removed while under the shower and large quantities of soap and water should be used to scrub the sulfur dioxide from the skin. Under no circumstances should any chemicals be used to try to neutralize the sulfur dioxide as this may have a more harmful effect.

(3) INHALATION

If the person is breathing he should be placed in a comfortable position and should be kept warm. If the person has stopped breathing, artificial respiration must be started immediately. This should be done by one of the employees trained in the CPR program. In an instance where appreciable sulfur dioxide inhalation has taken place, the person should be taken to the hospital for treatment.

F. OXYGEN GENERATION PLANT ALARMS

For a complete discussion of oxygen generation plant alarms and recommended responses, refer to the Division 4L1 Contractor's O&M Manual.

IX-EM-MF MECHANICAL EQUIPMENT FAILURE

A. MAIN SEWAGE PUMPS

Electrical power failure will cause all main sewage pumps to shut down. Main sewage pumps restart automatically upon restoration of power. If the water level in the wet well rises above Elevation +8.00, primary sedimentation tank effluent weirs will flood; if water level in wet well exceeds Elevation +10.00, primary sedimentation tanks will flood.

In the event of mechanical failure of one pump, refer to section headed " Main Pumping Station " of Chapter III, Operation and Control.

B. EFFLUENT WATER PUMPS

General purpose effluent water pumps are required to supply cooling, seal and lubrication water to other equipment.

a. Electrical power failure - high priority restart.
b. Mechanical failure - start standby pump.

Chlorine solution water pumps are required to make up chlorine solution.

a. Electrical power failure - high priority restart.
b. Mechanical failure - start standby pump.

Thickening tanks dilution water pumps are required to supply dilution water to the sludge thickening tanks, if gravity thickeners are in operation.

a. Electrical power failure - high priority restart.
b. Mechanical failure - start standby pump.

Backwash water pumps are required to supply backwash water to denitrification filters.

a. Electrical power failure - medium priority restart.
b. Mechanical failure - start standby pump.
c. Failure of automatic controls - refer to the section headed "Denitrification Filters" of Chapter III, Operation and Control.

Lawn irrigation water pumps are required to supply irrigation water.

a. Electrical power failure - low priority restart.
b. Mechanical failure - start standby pump.
c. Failure of automatic controls - refer to the section headed "Filter Building" of Chapter III, Operation and Control.

C. PLANT AIR COMPRESSORS

Plant air compressors are required to provide compressed air to pneumatically operated valves, bubbler tube liquid level controls, the hydro-pneumatic plant water system, miscellaneous pneumatically operated equipment and hose connections.

a. Electrical power failure - restart automatically upon restoration of power.

b. Mechanical failure - automatic start up of standby unit.

D. CHLORINATION EQUIPMENT

Chlorination equipment is required to chlorinate the treatment plant effluent.

a. Two evaporators, chlorinators and ejectors are required, if any one fails, a standby is provided.

b. If supply line from railroad car to Chlorine Room fails, install spool piece in standby line and place in service. (Refer to Chapter III.)

E. DECHLORINATION EQUIPMENT (SULFUR DIOXIDE EQUIPMENT)

Dechlorination equipment is required to remove chlorine from the plant effluent.

a. Three sulfonators and three evaporators are in place and ready for use. Two are required for normal operation, with the third as a backup unit. If a breakdown occurs in one of the units, repairs should be scheduled as soon as possible.

b. If a failure occurs in the supply line from the rail car to the sulfur dioxide room, the second line should be put in service or feed should be established from the one ton cylinders.

F. PROCESS AIR

Process air is required for channel aeration and reactor's purge air during combustible gas alarm.

a. Three blowers are available, normally one is all that is required for normal process air requirements.

b. If the on-line blower fails, start up one of the stand by blowers.

G. OXYGEN GENERATION EQUIPMENT

The oxygen generation equipment is required to provide oxygen to the activated sludge process in the reactors.

a. Three blowers are available, normally one is all that is required for normal process air requirements.

b. If the on-line blower fails, start up one of the stand by blowers.

IX-EM-IW - INDUSTRIAL WASTES

Should a problem arise at the treatment plant which is suspected to be of industrial origin, the Industrial Waste Section should be notified immediately. The section will begin immediately to track the problem down and eliminate the source. Files are kept on each industry with previous sample data and potential problems. Table IX-EM-IW-1 lists major industries in the Tampa service area and the possible problems which should arise from a particular firm. Every attempt has been made through a pretreatment program to minimize the effects of toxic materials on the treatment system.

TABLE IX-EM-IW - POTENTIAL INDUSTRIAL WASTES

Industry	Acid/ Base	High BOD	High TSS	High TKN	High P	High TDS	Oil & Grease	Cyanide	Cadmium	Chromium	Copper	Lead	Nickel	Silver	Zinc	Organics/ Surfactants
ASAP Circuits	X							X								
Aramark Uniform Service	X	X	X	X			X									X
Axon Circuit	X							X			X	X	X			
Bakeries		X	X	X												
Ball Packaging Products	X															
Bausch & Lomb	X							X								X
CSX Transportation							X									
Carol Mathew Properties		X	X	X												
Catalina Finer Foods		X	X	X												
Cintas Corporation	X	X	X				X					X			X	X
Clorox Company			X													
Devoe & Reynolds		X	X													X
Diversified Environmental	X						X									X
Dobbs International SVC		X	X													
Drums Inc.		X	X				X				X				X	
Electro-Lab Inc.	X							X	X	X			X		X	
Gaylord Container Corp.		X	X	X			X				X					
George A. Levy Inc.	X							X			X		X			
Gulf Coast Recycling	X								X			X				
Happy Egg Dealers		X	X	X	X											
Johnson Controls Inc.	X											X				
LSG\SKY Chef		X	X													
Lykes Brothers		X	X	X	X	X										
Metal to Metal	X							X		X	X		X			
National Fisheries		X	X	X												
National Linen Service		X	X				X									X
Pepsi-Cola Bottling	X	X	X													
Photoengraving Inc.	X							X		X	X			X	X	X
Reynolds Metals Company	X															
Singleton Seafood		X	X	X	X											
South Florida Tank Wash					X											X
Southeast Dairy Processors		X	X	X	X											
Stroh Brewery Company	X	X	X	X												
Tampa Bay Fisheries		X	X	X												
Tampa Electric Company	X												X			
Tampa Electroplating Co.	X							X		X			X			
Tampa Maid Seafood		X	X	X	X											
Tampa Soap & Chemical		X	X	X			X									
Theochem Laboratories Inc.	X	X	X	X												X
Unifirst Corp.		X	X	X			X									X
Waste Haulers		X	X	X	X		X		X		X	X			X	
Weyerhauser Paper Co.											X					
Wheelabrator McKay Bay	X															
Wonder Bread		X	X	X												

IX-EM-ER EMERGENCY FLOW REROUTING

Emergency rerouting of sewage flow may become necessary upon occurrence of any of the following:

- Severe flooding
- Process upset
- Equipment failure
- Combustible gas alarm
- Toxic waste entering the treatment facility

Refer to associated figures in Chapter III and the text below for procedures to bypass various treatment plant structures.

A. BYPASS OF SCREEN AND GRIT BUILDING NO. I

- Gate JC1-SG-I5 to MS-I open
- Gates to No. I Screen and Grit Channels closed
- Gate from Existing Bypass Structure to Junction Chamber No. 3 open
- Gate from existing Bypass Structure to Junction Chamber No. 3 closed
- Gate JCI-SG-I5 to Screen and Grit Building in Junction Chamber No. 1 open

B. BYPASS OF SCREEN AND GRIT BUILDING NO. 2

- Gate JC1-SG-I5 to MS-I open
- Gates to No. I Screen and Grit Channels open
- Gate from Existing Bypass Structure to Junction Chamber No. 3 open
- Stop logs to primary tanks removed
- Stop log to main pumping Station wet well from primary tanks removed

C. BYPASS PRIMARY SEDIMENTATION TANKS

- All flow through Screen and Grit Building No. 2
- Gate JC2-SG-I to MRC-I closed
- Gate JC2-SG-2 to MRC-2 closed
- Gate JC2-SG-4 to MRC-4 open

D. BYPASS CARBONACEOUS STAGE REACTORS

- Gate UR-SG-I4 on south end of Main Pumping Station Discharge Channel closed
- Gates (UR-SG-5, 6, 6, 8, etc.) to Carbonaceous Reactors closed
- Stop gates between Carbonaceous & Nitrification open

E. BYPASS ALL REACTORS

- Gate UR-SG-I4 on south end of Main Pumping Station Discharge Channel open (MPF-I)
- Gate UR-SG-2 to Carbonaceous Reactors and Gate UR-SG-3 to the nitrification stage supplemental influent line closed
- Gates CA-SG-I, 2, 3, 4, in Cl_2 Contact from Secondary Treatment Control Conduit open

F. BYPASS DENITRIFICATION FILTERS

- Influent rectangular butterfly valves to filters closed
- Gates FB-SG-I and 2 from Filter Influent Conduit to Final Effluent Channel open

G. BYPASS ENTIRE TREATMENT PLANT

- All flow through Screen and Grit Building No. I
- Open existing bypass structure gate to Existing Effluent Building
- Close gate to Primary Tanks at existing bypass structure

IX-EM-SW SEVERE WEATHER

A. HURRICANES

Instructions given below may be superseded by the latest copy of the City of Tampa Hurricane Plan. Always refer to the latest copy of the official plan for details related to hurricane response.

(1) HURRICANE WATCH

This means that a hurricane has formed off shore and that its path is being tracked and its intensity is being monitored.

- All personnel are instructed to keep themselves updated on the the position, path, and strength of the storm
- Shift supervisors should review and be familiar with all emergency telephone numbers and be prepared to call a Hurricane Alert
- All key staff personnel should begin familiarizing themselves with procedures for Hurricane Alert and Warning

(2) HURRICANE ALERT

This means that the hurricane is on a path which could pass through this area.

- All loose articles should be secured or stored
- All equipment that may be damaged by high wind or water should be covered, secured, or stored
- Shift personnel should be placed on standby for possible manning of multiple shifts
- Prepare containers for storage of drinking water
- Portable generators, lamps, spare batteries, foul weather gear, and first aid kits will be double checked
- City boat will be moved to an inland fenced pumping station

(3) HURRICANE WARNING

This means the hurricane is quite certain to pass through or near this area within a short time.

- The shift scheduled to work at time of storm incidence will be doubled and will remain on duty for the duration of the storm or until relieved
- All nonessential personnel will be directed to remain home or seek a safe location of their choice for the duration of the storm
- Two mechanics and two electricians will be assigned standby for the duration of the storm
- Travel will be kept to a minimum, lift stations will be boarded or sandbagged according to instructions at the time
- When storm becomes imminent, all vehicular traffic will cease and personnel on duty will seek safe shelter
- All treatment plant buildings will be boarded and sandbagged for possible flooding which would affect operational equipment or controls. Windows not boarded will be taped for protection from shattering
- The secondary relief outfall gate will be opened and left open for the duration of the storm
- Emergency generators will be manned for the duration of the storm and started per instruction
- Portable generators, lamps, foul weather gear and first aid kits are to abe issued as necessary
- All power not essential to operation will be shut down according to instructions issued at the time
- Chlorine will be shut off at cars and cars will be secured and checked
- Sulfur dioxide will be shut off at cars and cars will be secured and checked
- Fresh water drinking supply will be stored in provided containers
- Radios will be supplied for storm advisories
- Storm advisory will be cancelled only by Plant Manager

B. FLOODING

Flooding is usually associated with a hurricane situation. The key to handling a flood situation is being prepared to board and sand bag all essential buildings and equipment to minimize all damages. When flood conditions exist, sewage flows to the plant will increase dramatically due to submerged manholes. During a time of severe flooding, possibilities of pumping stations overflows are also increased. This will warrant emergency chlorination where possible.

C. HIGH WIND OR TORNADO ALERT

In the case of high wind or a tornado alert, all equipment should be secured. Any materials which can be blown around should be tied down or moved There is usually very little advance notice for such events which indicates that good housekeeping and storage procedures are mandatory year round. During any storm where high wind and blowing debris is a problem, all personnel should stay inside and away from glass windows as much as possible.

IX-EM-FR FIRE

This section will deal with a variety of areas which are considered special fire hazards as well as generalized fire procedures.

A. GENERAL

In all cases, if a fire breaks out, the Fire Department should be notified at once see Section IX-15, Emergency Telephone Numbers). If the fire is minor, an attempt should be made to control the fire only if there is no threat of personal injury. In the case of a major fire, personnel should evacuate the area immediately.

The Fire Department should be alerted to any fires in the areas listed below because of the special precautions which will have to be taken or the fire fighting methods to be employed.

B. FIRES IN THE THE OXYGEN GENERATION, STORAGE AND DISSOLUTION AREAS

Combustion can occur more readily and be of much greater intensity in the presence of pure oxygen than in air.

C. FIRES IN THE METHANOL STORAGE AREA

Methanol in concentration of 6 percent to 36.5 percent in air is considered to be explosive. Methanol has a relatively low ignition point of 878 degrees F.

D. FIRES IN THE ANAEROBIC DIGESTION TANKS AREA

Fires in the area of the anaerobic digestion tanks may be especially hazardous because methane gas may be present in explosive concentrations.

E. ELECTRICAL FIRES

Fire Department officials should be informed of the location of circuit breakers designated to isolate electrical circuits within the plant. Electricians should also be called in when any electrical fire occurs.

F. FIRES IN CHLORINE HANDLING AREAS

In the case of fire, chlorine cars must be kept cool by constantly spraying them with water. If possible, the cars should be moved from the area. If the chlorine tank cars are in danger of becoming engulfed in the fire, the entire area downwind must be evacuated. This should be done with the help of the Police and Fire Departments.

G. FIRE IN SULFUR DIOXIDE HANDLING AREAS

In the case of fire in the sulfur dioxide handling area, the cars and equipment should be kept cool by spraying with water. If possible the cars should be disconnected and removed from the area. In case the cars become engulfed in fire the entire area downwind should be evacuated with help from the Police and Fire Dept.

H. FIRES IN THE HEAT DRYING PLANT

In the case of fire in the heat drying building, the operators should first turn off the gas feed and electrical breakers in the area. If the fire is small, it can be dealt with using hand held extinguishers and hoses located on site. If it is too large for the staff to handle, the operations supervisor should be notified and the Tampa Fire Dept. will have to be called. In the event of calling the Fire Dept. they should be met at the gate and directed to the fire. A fire located in the dryer drum or separator can be extinguished using the in place process quench system.

I. FIRES OR HEAT ELEVATION IN THE DRIED SLUDGE STORAGE SILOS

If silo temperatures begin to rise, they should be monitored on a more frequent basis to determine if a dangerous level has been reached. If temperatures reach 140 or above the heat drying supervisor should utilize the recirculation cooling loop to reduce temperatures. If temperatures continue to rise a contract pellet hauler should be contacted to remove enough pellets to lower the temperature in the silo.

In the event that temperatures rise to 150 or above, a trailer should be brought into position as soon as possible and filled with enough product to drop temperatures below 140 degrees. If a fire starts in a silo, the silo should be isolated from the rest of the system as soon as possible by stopping all conveyors to and from the silo. At the same time the rotary valve on the bottom should be closed. The electrical power should now be shut off to the area and secured. Tampa Fire Dept. should be notified and met at the gate to direct them to the site. Water should be used to flood the silo in order to extinguish the fire.

IX-EM-PI - PERSONAL INJURIES

First Aid kits have been provided in strategic locations in the plant for treatment of minor injuries. Employees should familiarize themselves with the locations of these supplies. In cases of major injuries, an ambulance should be summoned (se Section IX-15 Emergency Telephone Numbers). Attempts to move a seriously injured person should only be done by qualified persons. All personnel are urged to take the Multimedia First Aid course offered by the City Safety Department.

IX-EM-UF UTILITY FAILURE

A. CITY WATER FAILURE

City water is used for drinking water, sanitary facilities, inside wash water, and fire hydrants. If the City water is cut off, there is no alternate water supply. Should the City water supply be interrupted, it should be determined if the problem is with the Water Department or if there is a break on treatment plant property. In either case, repairs should be initiated immediately, either by Treatment Plant maintenance or Water Department maintenance personnel.

B. TELEPHONE SYSTEM FAILURE

If telephone service to the plant is interrupted, alternate sources of communication exist. The Telephone Company should be notified immediately to begin repairs. While repairs are being made, department communications can be carried out by radio. The department maintains its own dedicated frequencies for in plant and out of plant communication. This system can be used for communication between the base station and the mobile units or between the mobile units separately.

An outage may sever the phone lines that relay communication to the computer alarm system that monitors the pump stations. In this event the dispatcher will alert the pump station operators to monitor critical stations until the phone lines are repaired.

C. NATURAL GAS SYSTEM FAILURE

In the event that the natural gas supply is lost without prior warning, the Administration Building. Feed line should be closed off at the main valve located on the north side of the building. After a shutdown, the laboratory equipment and hot water heater should be prepared for restarting. After contacting the gas supplier and having the supply re-established, trained personnel should be notified to reopen the gas lines and restart the equipment.

Loss of gas to the heat drying facility will initiate an automatic shutdown of the gas feed valves to the after burners and to the driers. This will cause a shutdown of the entire facility. When gas flow and pressure has been restored to normal the facility may be brought back on line by using normal start-up procedures.

D. ELECTRICITY SYSTEM FAILURE

In the event of a power failure caused by loss of the TECO feeds to the plant, automatic switch-gear will enable our stand-by generators to start, and come on line. Currently the diesel engine generators have enough capacity to run all necessary equipment in the plant.

After the generators synchronize and come on line, the plant staff will restart any equipment necessary for normal operation. Once after contacting TECO and making sure power is reliably restored, the switch gear will allow TECO power to be transferred back to the plant without interruption.

IX-EM-EE EMERGENCY EQUIPMENT INVENTORY

A. CHLORINE AND SULFUR DIOXIDE SAFETY EQUIPMENT

- Three Chlorine Emergency Kits Type B
- Two Chlorine Emergency Kits Type C
- Ammonia bottles for leak detection
- Air Packs (see H below)

B. PORTABLE METERS

The treatment plant currently has forty nine portable gas detectors in service, the majority of which are Neotronics Exotox brand detectors. They are being replaced as necessary by detectors made by Industrial Scientific Corporation (Model TMX412)

- Nine detectors are assigned to lift station mechanics
- Eight detectors are assigned to Instrumentation
- Seven detectors are assigned to Operations
- Six detectors are assigned to the Electrical shop
- Five detectors are assigned to Industrial Waste
- Five detectors are assigned to Lift Station Operations
- Four detectors are assigned to the P.M. Section
- Two detectors are assigned to the Plant Mechanics
- One detector assigned to Building and Grounds

Calibration and maintenance is carried out by the Instrument Shop

C. MATERIALS

- Very large spare parts inventory for most critical equipment - electrical/mechanical
- Inventory of building materials - lumber, fasteners, stock metals, and masonry supplies

- Inventory of spare tools and related supplies
- Inventory of batteries, cleaners, fuels and lubricants
- Materials for shelter in place emergencies are located in designated areas throughout the plant

D. CHEMICALS

- Adequate supply of lime and HTH for disinfection of spills and overflows
- Emergency supplies of Chemicals used in AWT Process
- Standby rail car of Cl_2
- Liquid Oxygen
- Sulfur dioxide rail car and one ton cylinders

E. COMMUNICATIONS EQUIPMENT

- Two base stations
- One hundred twenty portable radios

F. PROTECTIVE CLOTHING

- Supply of rubber and vinyl gloves available
- Supply of goggles and full face shields available
- Supply of rubber boots and rain gear available
- Supply of dust masks on site
- Supply of chemical resistant vinyl suits available on site

G. FIRST AID EQUIPMENT

- Stretchers and blankets at strategic locations
- First aid kits located in each key building
- First aid supplies to replenish first aid kit inventories
- Laboratory contains eye wash, first aid kit, shower and bum blanket
- Eyewash stations in chemical handling areas

H. AIR PACKS

- Sixteen MSA air packs are currently located in the plant for general use
- Eighteen MSA air packs are assigned to the pump stations for use
- Two mask type scat packs are located at the chlorine connection platform
- One large bottle system with two masks is at the plant for general use
- Spare air tanks are stored at the main pump station in the treatment plant

IX-EM-PP PLANT PERSONNEL AND EMERGENCY RESPONSE CENTER

A. PLANT PERSONNEL FOR EMERGENCY OPERATIONS

The Treatment Plant Manager is responsible for implementing the emergency plans concerning the treatment plant and the pumping stations. The Treatment Plant Manager reports directly to the Director of the Department of Sanitary Sewers. The following is a listing of the treatment plant staff and their respective responsibilities:

(1) <u>TREATMENT PLANT MANAGER</u>

- Upon receipt of emergency condition message, activates appropriate portion of emergency operations plan based on initial alert information

- Brings together key personnel to assess severity and outline response actions. Key personnel might include: Maintenance Manager, Operation Manager, Laboratory Supervisor, Wastewater Technical Supervisor, and representatives from outside organizations providing assistance

- The various department heads are responsible for mobilizing their staffs and the Treatment Plant Manager should support this effort

- Notify State Department of Environmental Protection and Hillsborough County Environmental Protection Commission of the emergency situation

- Monitor and support all emergency response actions as required until normal operation is restored

- Critique emergency operations plan and upgrade the plan as required. Areas to be reviewed include: response time; adequacy of emergency procedures, equipment, communications, and personnel training; process flexibility; and performance of auxiliary personnel and other departments

(2) MAINTENANCE MANAGER

- Mobilize emergency maintenance teams as directed by nature of emergency

- Support emergency operations actions with personnel, equipment, and maintenance skills

- Coordinate with other organizations providing specialized maintenance skills and equipment through agreements or contracts

- Monitor and support as required all emergency maintenance team actions until normal operation is restored

- Critique the emergency response as viewed by the Maintenance Manager and provide Treatment Plant Manager with input to his overall emergency operations critique

(3) OPERATIONS MANAGER

- Mobilize emergency operating staff as dictated by nature of emergency

- Provide treatment Plant Manager with input concerning operational actions to minimize public health and environmental impact of incident

- Monitor and support as required all emergency actions involving operators until normal operation is restored

- Critique the emergency response as viewed by the plant operator and provide Treatment Plant Manager with input to his overall emergency operations critique

(4) WASTEWATER TECHNICAL SUPERVISOR

- Mobilize emergency crews as needed

- Provide Treatment Plant Manager with input concerning actions to minimize the public health and environmental impact of the emergency situation

- In the case of an industrial spill, efforts should be made to track down and eliminate the source

- Coordinate activities with regulatory agencies and where possible, carry out possible field operations to correct objectionable conditions

- Monitor and support all field service personnel until normal operation is restored
- Critique actions of field service personnel during the emergency situation and provide input to the Treatment Plant Manager for his overall critique

(5) LABORATORY SUPERVISOR

- Mobilize laboratory staff and conduct sampling for process control and severity analysis as required
- Ensure Treatment Plant Manager and Operations Manager are kept up to date on results of sampling during the emergency
- Monitor and support as required activities of laboratory personnel
- Critique actions of laboratory personnel during emergency situation and provide input to Treatment Plant Manager for his overall critique

B. EMERGENCY RESPONSE CENTER

The Emergency Response Center will be located in the Maintenance Facility and Operations Building. This center will be the hub for all emergency operations and will be stocked accordingly. This will eventually be a central location for all remote alarms and dispatching of field and /or operational personnel for the correction of the alarm condition. Maps of the entire system will be maintained as well as " as built drawings " of all structures. This will also be a central reference point for all manufacturers information and records. This center will also serve as the central point for all hurricane activities and related emergency supplies

When emergency condition notices are received by telephone, the operator on duty should ensure all pertinent information surrounding the emergency is accurately recorded in writing.

C. UPDATING EMERGENCY PLANS AND PROCEDURES

For emergency plans to be effective, they must be constantly reviewed and revised as needed. Each emergency response is critiqued when operations are back to normal. This critique procedure is probably the most valuable tool in revising and updating emergency procedures, hurricane activities and related emergency supplies.

IX-EM-CO COORDINATION OF POLICE/FIRE DEPARTMENTS

The coordination of the Sewer Department with Police and Fire is the responsibility of the Treatment Plant Manager or his agent. The Police Department should be notified in the case of vehicular accidents, civil disorders, vandalism, traffic obstructions, evacuation procedures, and plant security (see emergency telephone numbers listed in Section IX).

The Fire Department should be notified if at any point in our system: (1) a fire is experienced; (2) chlorine leakage occurs; (3) sulfur dioxide leak occurs; (4) a rescue operation is needed. The Fire Department also conducts yearly inspections of the premises for fire protection and prevention.

IX-EM-ET EMERGENCY TELEPHONE NUMBERS

EMERGENCY CALL

PERSONNEL	BEEPER NUMBER	HOME
IN CASE OF PUMP STATION ALARM		
First -Man on Call	255-8299	
Second-Tony Medero	339-0005	621-3136
Third-George Williams	255-8298	248-9369
Fourth-John Shearin	255-8289	926-0309
Fifth-Tony Leon	339-0017	973-1279
IN CASE OF ELECTRICAL FAILURE		
First-Man on Call	255-8286	
Second-Butch Paige	339-0011	904-588-5422
Third-Nelson Garcia	339-0012	884-8906
Fourth-Don Welch	339-0086	877-1145
Fifth-John Shearin	255-8289	926-0309
IN CASE OF PLANT EQUIPMENT FAILURE		
First-Man on Call	255-8288	
Second-Roger Lents	339-0008	935-2759
Third-Ray Vliet	339-0010	973-7050
Fourth-Bruce DeBonville	255-8292	988-6357
Fifth-John Shearin	255-8289	926-0309
IN CASE OF INSTRUMENTATION FAILURE		
First-Man on Call	Refer to call Schedule	
Second-Juergen Amann	339-0006	873-3572
Third-Richard Holbin	339-0009	961-1406
Fourth-Pat McPhee	339-0004	684-4493
Fifth-John Shearin	255-8289	926-0309

EMERGENCY CALL

PERSONNEL	BEEPER NUMBER	HOME
IN CASE OF BUILDING AND GROUNDS EMERGENCY		
First-Richard Fernandez	255-8293	932-0103
Second-Eddie Garriga	339-0022	885-4411
Third-Richard Birchmire		933-5585
Fourth-Gary Chartier		904-796-2017
Fifth-John Shearin	255-8289	926-0309
IN CASE OF A PLANT EMERGENCY		
First-Jim Wilson	255-8290	685-6594
Second-Eddie Driver	255-8296	973-1469
Third-Dan VanderSchuur	255-8291	962-2442
Fourth-Tom Smilie	255-8297	659-0166
Fifth-John Drapp		949-2034
Sixth-John Shearin	255-8289	926-0309
Seventh-Dave Pickard		961-4858
IN CASE OF LABORATORY EMERGENCY		
First-Dave Howell	255-8295	968-1926
Second- Roger Wise		264-5608
Third-Sharon Rozelle		985-7044
Fourth-Dan Page		885-1032
IN CASE OF COLLECTION SYSTEMS EMERGENCY		
First-Maintenance Yard (Base 2)		259-1693
Second-Man on Beeper		Refer to Call Schedule
Third-Bob Bell		626-0128
Fourth-Steve Sweeney		931-1078
IN CASE OF INDUSTRIAL WASTE EMERGENCY		
First-Man on Beeper	255-8294	
Second-John Daily		654-0677
Third-Dan Page		885-1032

OTHER ADMINISTRATIVE NUMBERS

	HOME	OFFICE
RALPH METCALF	837-8882	274-8108
BRAD BAIRD	837-5983	274-8075
HENRY DORZBACK	971-9035	274-8935
AL HOEL	527-2569	274-8475
PHIL RICE	347-1973	274-8078
STEVE SWEENEY	931-1078	259-1618

PHYSICIANS:	CLEVELAND MEDICAL CENTER - DR. LUBIN	253-3164
	DR. JOHN CARTHY	932-1151
	MEMORIAL HOSPITAL (after hours treatment)	873-6400
HOSPITALS:	ST. JOSEPH'S HOSPITAL	870-4000
	TAMPA GENERAL HOSPITAL	251-7000
	UNIVERSITY HOSPITAL	971-6000
EMERGENCY:	RESCUE	911
	AMBULANCE	911
	FIRE DEPARTMENT	911
	CITY POLICE	911
	HIGHWAY	911
	SHERIFF	911
	SAFETY DEPARTMENT	274-8724
UTILITIES:	TAMPA ELECTRIC COMPANY	622-8281
	GENERAL TELEPHONE	1-800-483-1000 OR 673-0025
	DEPARTMENT OF PUBLIC WORKS	274-8197
	PEOPLES GAS COMPANY	272-1500
	WATER DEPARTMENT	259-1634

EMERGENCY RESPONSE AGENCIES:	CHEMICAL TRANSPORTATION EMERGENCY CENTER, WASHINGTON, D.C	1-800-429-9300
	NATIONAL RESPONSE CENTER	1-800-424-8802
	STATE EMERGENCY RESPONSE COMMISSION	1-800-320-0519
	LOCAL EMERGENCY PLANNING COMMISSION	1-813-577-5151
REGULATORY AGENCIES:	HILLSBOROUGH COUNTY EPC	1-813-272-5960
	FLORIDA DEPARTMENT OF ENVIRONMENTAL PROTECTION	1-813-744-6100
	24 hr. STATEWIDE HOTLINE	1-904-413-9911
	UNITED STATES ENVIRONMENTAL PROTECTION (ATLANTA)	1-404-347-7428

MAINTENANCE

X. INTRODUCTION

A. GENERAL

A preventive maintenance program which includes regular inspection and timely service of all equipment will assure dependable operation of the wastewater treatment facility. The procedures described below are designed to keep the equipment and structures in good condition. Regularly scheduled inspections and servicing, periodic vibration analyses and/or instrument checks and timely repair or replacement of malfunctioning and worn parts are essential.

B. PLANT MAINTENANCE

A preventive maintenance program is established for the scheduled inspection of all mechanical and electrical equipment to detect malfunction in the early stages, worn parts and need for adjustments. The preventive maintenance program provides schedules for service and lubrication of mechanical equipment.

The maintenance task tables on the following pages identify plant equipment, and indicate specific maintenance tasks to be performed and the frequency of each. Abbreviated heading in the frequency columns indicate the following:

Symbol	Definition
D	Daily
W	Weekly
M	Monthly
Q	Quarterly
SA	Semi-Annually
A	Annually
O	Other

The markings within the frequency columns identify the frequency with which each task must be performed and the personnel responsible for the task. Personnel abbreviations are as follows:

Symbol	Definition
O	Operator
M	Mechanical Maintenance
E	Electrical Maintenance
I	Instrument Maintenance

A neat and clean treatment plant should be maintained at all times. All areas of the facility must be kept free of debris, spilled chemicals, spilled fuels and dirt accumulations. Painted surfaces of equipment and structures must be kept clean and be repainted as necessary.

Semi-annual inspections are to be made of all structures and roadways. If the inspections reveal signs of deterioration, repairs must be made promptly.

Painted surfaces of structures, machinery and electrical equipment must be recoated as required to prevent rust and corrosion. All surfaces to be repainted must be repaired and cleaned as required before application of the new coating. Established specifications and procedures must be carefully followed.

C. TOOLS AND EQUIPMENT

Adequate tools and lubrication equipment are necessary to properly maintain the equipment and systems of the wastewater treatment facility. In many cases, special tools and equipment for particular equipment repair procedures were provided with the equipment by the construction contractors. All tools must be properly maintained and stored until needed. Broken or damaged tools must be repaired or replaced.

D. LUBRICATION

Preventive maintenance requires timely and proper lubrication of moving parts with the correct lubricant. Lubrication frequency schedules for each piece of equipment are included in the Maintenance Task Tables. The frequencies listed for lubrication reflect the recommendations of the manufacturers. However, lubrication schedules may be adjusted to reflect actual operating times for specific equipment which are for example operated only part time.

The specific lubricant required for each piece of equipment is specified in the manufacturer's information in the O&M Manuals prepared by the respective contractors.

The Maintenance Department keeps and continuously updates a manual of the specific lubricants which are in use for each piece of equipment in the plant. In many cases alternate lubricants of equivalent specifications are obtained if the Purchasing Department for the City determines that there is an advantage in such substitutions. It should be carefully noted that any substitute lubricant must be specifically authorized by the Maintenance Manager before use.

E. MAINTENANCE FREQUENCY INTERVALS

The maintenance frequency intervals indicated in the tables in the following sections are the manufacturer's recommended maintenance intervals and are the maximum intervals. In practice, however, field experience may indicate that more frequent maintenance or other modification may be required. Such changes should be consistent with good practice to insure that equipment is maintained in a good state of repair so that performance is not impaired.

MAINTENANCE BUILDING (040)
SUMP PUMPS
040-008-01-0000 AND 040-008-02-0000

MAINTENANCE TASK	FREQUENCY						
	D	W	M	Q	SA	A	0
SUMP PUMP							
• Check for unusual noise and excessive vibration.	O						
• Check operating temperature of motor bearings; bearing temperature should not be above 200 degrees F.	O	M					
NOTES Operators are required to manually check the temperature of motor bearings daily. Mechanical Maintenance Personnel are required to check the temperature of motor bearings with a temperature sensing device, as recommended by the motor manufacturer weekly.							
• Check water lubrication line for damage and tightness.					M		
• Clean bearings from dirt and deteriorated lubricants.					M		
• Inspect parts of pump for wear and scoring.							M
• Check packing and gaskets. Replace if necessary.					M		
LUBRICATION							
• Inspect oil reservoir of oiler for intermediate bearings. Refill.	O						
• Lubricate motor bearings in accordance with manufacturer's recommended procedures. Do not over lubricate.							

MAINTENANCE BUILDING (040)
OVERHEAD CRANE
040-009-01-0000

MAINTENANCE TASK	FREQUENCY						
	D	W	M	Q	SA	A	0
OVERHEAD CRANE - GENERAL							
• Check all functional operating mechanisms for any maladjustments that may interfere with proper operation.			M				
• Check that warning labels, push button markings or capacity markings have not been removed or are illegible.					M		
• Check bolts, nuts and rivets for tightness.					M		
• Check pins, bearings, shafts and gears for excessive wear, cracks, distortion and corrosion; replace defective parts.					M		
• Check brake system for excessive wear and drift; adjust if required.						M	
• Check electrical contactors, limit switches and push buttons for pitting, loose wires, deterioration and contact wear. Check electrical wiring for cracked, cut or frayed insulation.						E	
• For detailed maintenance procedures and trouble-shooting charts refer to manufacturer's literature.							M
BOOKS							
• Check for deformation and chemical damage.			M				
• Check throat openings; replace if bent from normal opening.			M				
• Check for twists of hook; replace if twisted.			M				
• Check for hinge action wear at point of contact and elongation of hook.			M				
LOAD BEARING S.S. REEVED CABLE							
• Check load bearing cable for wear, twist, distortion, kinks, strand breaks, improper dead ending; replace cable if conditions described above are excessive.			M				
LUBRICATION							
• Check gear oil; maintain level at oil bath.					M		
• Lubricate bearings through a grease fitting.					M		
• Lubricate cable.			M				

MAINTENANCE BUILDING (040)
HOISTS
040-009-02-0000 THROUGH 040-009-05-0000

MAINTENANCE TASK	FREQUENCY						
	D	W	M	Q	SA	A	0
HOIST - GENERAL							
• Check all functional operating mechanisms for any maladjustments that may interfere with proper operation.			M				
• Check that warning labels, capacity markings have not been removed or are illegible.					M		
• Check bolts, nuts and rivets for tightness.					M		
• Check pins, bearings, shafts and gears for excessive wear, cracks, distortion and corrosion; replace defective parts.					M		
• Check brake system for excessive wear and drift; adjust if required.						M	
HOOKS							
• Check for deformation and chemical damage.			M				
• Check throat openings; replace if bent form normal opening.			M				
• Check for twists of hook; replace if twisted.			M				
• Check if hook is bent; replace if bent.			M				
• Check for hinge action wear at point of contact and elongation of hook.			M				
LOAD BEARING CHAIN							
• Check load bearing chain for war, twist, distortion, kinks, strand breaks, replace chain if conditions described above are excessive.			M				
LUBRICATION							
• Lubricate bearings of trolley through a grease fitting.					M		

MAINTENANCE BUILDING (040)
ROOF EXHAUST FANS
040-050-02-0000 THROUGH 040-050-08-0000
040-050-10-0000, 040-050-11-0000
040-050-13-0000 THROUGH 040-050-21-0000

MAINTENANCE TASK	FREQUENCY						
	D	W	M	Q	SA	A	0
ROOF EXHAUST FAN							
• Check for unusual noise and excessive vibration. If noises develop, check the fan for worn belt and bearings, proper installation and anchoring and for adequate clearance of rotating members.						M	
• Clean the blades from accumulated foreign material.						M	
• Check V-Belt tension. If adjustment is made, check pulley alignment.						M	
• Check condition of belt on belt driven unit. Replace if necessary.						M	
NOTE If unit is to be left idle for an extended period, remove belts and store in cool, dry place.							
• Check motor for free movement and motor bearings for excessive wear.						E	
• Check shafts for alignment and sheaves for chipping, dents or rough surface.						M	
LUBRICATION							
• Consult information printed on motor for lubrication instructions.						M	

MAINTENANCE BUILDING (040)
AIR HANDLER UNITS
040-051-01-0000 THROUGH 040-051-05-0000

MAINTENANCE TASK	FREQUENCY						
	D	W	M	Q	SA	A	0
AIR HANDLER UNIT							
• Inspect unit casing and accessories for paint chipping or corrosion. If damage is found, clean and repaint.						M	
• Check damper linkage, setscrews and blade adjustment for proper operation.				M			
• Check belt tension. Adjust if necessary.				M			
• Inspect all belts. Replace if broken or frayed.				M			
• Check the refrigerant for moisture. Refer to manufacturer's literature for instruction.			M				
• Check refrigeration system for leaks.				M			
• Clean fan and blower wheels and fan shaft. If rust is found on the fan shaft, remove with emery cloth and recoat.						M	
• If noises develop, check all fan bearings, races and locking devices for tightness, check the fan for worn bearings and for adequate clearance of rotating members.							M
• Check for excessive vibration and high temperature of motors.		O					
• Check drain pan of evaporator for foreign material.				O			
• Check all electrical terminals for tightness and electrical wires for damage.						E	
• Check that rubber insulators are in clamps around all refrigerant tubing. Clamps must not rub against tubing. Make certain all copper tubing is free from contact with other parts.				M			
• Check system for proper operation. Refer to manufacturer's literature for instruction.							M
• Refer to manufacturer's literature for trouble-shooting procedures.							M

MAINTENANCE BUILDING (040)
AIR HANDLER UNITS
040-051-01-0000 THROUGH 040-051-05-0000

MAINTENANCE TASK	FREQUENCY						
	D	W	M	Q	SA	A	0
LUBRICATION							
• Lubricate electric motors in accordance with manufacturer's instruction.							E
• Lubricate fan bearings. Do not over lubricate. Add grease only while fan is operating.					M		
• Lubricate blower bearings. Do not over grease.			M				

MAINTENANCE BUILDING (040)
AIR CONDITIONING UNIT
040-051-07-0000

MAINTENANCE TASK	FREQUENCY						
	D	W	M	Q	SA	A	0
AIR CONDITIONING UNIT							
• Inspect air filters and replace if needed.			M				
• Inspect unit coils. Clean if necessary.					M		
• Inspect unit casing and accessories for paint chipping or corrosion. If damage is found, clean and repaint.						M	
• Clean fan wheels and fan shaft. If rust is found on the fan shaft, remove with emery cloth and recoat.						M	
• Check condensate drain line and drain pan for foreign material.						M	
• Check damper linkage, setscrews and blade adjustment for proper operation.						M	
• Check refrigeration system for leaks.				M			
• Check thermostat control for proper operation. Refer to manufacturer's literature for instructions.							I
• Refer to manufacturer's literature for trouble-shooting procedures.							M
• Inspect the activated carbon canister and replace if necessary. Refer to manufacturer's literature for replacing procedure.							M
FAN BEARINGS							
• If noises develop, check all bearing races and locking devices for tightness, check the fan for worn bearings and for adequate clearance of rotating members.					M		
FAN MOTOR							
• Check for excessive vibration and high temperature.			O				
LUBRICATION							
• Lubricate fan bearings. Do not over lubricate. Add grease only while fan is operating.					M		
• Lubricate motor in accordance with manufacturer instruction.					E		
• Lubricate inlet vane and outlet damper bearings with a few drops of nondetergent SAE 20 oil.						M	

MAINTENANCE BUILDING (040)
HEATING AND VENTILATING UNIT
040-051-07-0000

MAINTENANCE TASK	FREQUENCY						
	D	W	M	Q	SA	A	0
HEATING AND VENTILATING UNIT							
• Inspect air filters and replace if needed.			M				
• Inspect unit coils. Clean if necessary.					M		
• Inspect unit casing and accessories for paint chipping or corrosion. If damage is found, clean and repaint.						M	
• Clean fan wheels and fan shaft. If rust is found on the fan shaft, remove with emery cloth and recoat.						M	
• Check damper linkage, setscrews and blade adjustment for proper operation.						M	
• Check thermostat control for proper operation. Refer to manufacturer's literature for instructions.							I
• Refer to manufacturer's literature for trouble-shooting procedures.							M
• Inspect for unusual noise and excessive vibration.		O					
FAN BEARINGS							
• If noises develop, check all bearing races and locking devices for tightness, check the fan for worn bearings and for adequate clearance of rotating members.					M		
FAN MOTOR							
• Check for excessive vibration and high temperature.			O				
LUBRICATION							
• Lubricate fan bearings. Do not over lubricate. Add grease only while fan is operating.					M		
• Lubricate motor in accordance with manufacturer instruction.					E		
• Lubricate inlet vane and outlet damper bearings with a few drops of nondetergent SAE 20 oil.						M	

MAINTENANCE BUILDING (040)
CHILLER UNITS
040-052-01-0000 AND 040-052-02-0000

MAINTENANCE TASK	FREQUENCY						
	D	W	M	Q	SA	A	0
WATER CHILLER UNIT							
• Inspect control center.			O				
• Check safety and operating controls for proper operation.			O				
• Change volute drain strainer and refrigerant filter.							M
• Inspect purge pump for air leakage.							M
• Inspect refrigerant flow chamber. Check valve travel and gasket.			M				
• Charge the system with refrigerant.							M
• Inspect and clean cooler tubes.					M		
• Clean condenser tubes.						M	
• Inspect starting equipment.				E			
LUBRICATION							
• Check oil level in reservoir sight glass. Add oil if necessary in accordance with manufacturer's recommendations.		O					
• Lubricate motor in accordance with manufacturer's recommendations.			E				

MAINTENANCE BUILDING (040)
CHILLER WATER PUMPS
040-053-01-0000 AND 040-053-02-0000

MAINTENANCE TASK	FREQUENCY						
	D	W	M	Q	SA	A	0
CHILLED WATER PUMP							
• Inspector motor bearings for overheating.			O				
• Check for noise, which may indicate trapped air or hydraulic problem.		O					
• Check suction pressure.							M
• Check discharge pressure.							M
LUBRICATION							
• Lubricate motor bearings in accordance with manufacturer's recommendations.							E

MAINTENANCE BUILDING (040)
040-054-01-0000 THROUGH 040-054-18-0000

MAINTENANCE TASK	FREQUENCY						
	D	W	M	Q	SA	A	0
ELECTRIC REHEAT COIL							
• Check heater element and air filter for dirt and foreign matter. Clean.					M		
• Inspect all connections for tightness.					E		
• Check wire and cable insulation for deterioration.						E	
• Refer to manufacturer's literature for trouble-shooting procedures.							E

MAINTENANCE BUILDING (040)
EXHAUST FANS
040-056-09-0000, 040-056-10-0000,
040-056-11-0000

MAINTENANCE TASK	FREQUENCY						
	D	W	M	Q	SA	A	0
EXHAUST FAN							
• Check for unusual noise and excessive vibration.		O					
• Inspect fan wheels, shafts, housing scroll and side liners for corrosion or abrasive wear. Replace if necessary.					M		
• Check all bolts and all connections for tightness.					M		
• Clean housing, wheels, louvers, inlet and outlet ductwork of dust and dirt.					M		
• Check for worn or damage belt. Replace if necessary.					M		
• Clean alignment of sheaves and belt tension.					M		
• Clean dampers and check for freedom of movement, corrosion and erosion.					M		
• Check all alignment of all parts.					M		
LUBRICATION							
• Lubricate fan bearings.					M		
• Lubricate motor bearings according to the manufacturer's recommendations. Do not over lubricate.			E				

MAINTENANCE BUILDING (040)
ELECTRIC UNIT HEATERS
040-064-01-0000 THROUGH 040-064-11-0000

MAINTENANCE TASK	FREQUENCY						
	D	W	M	Q	SA	A	0
ELECTRIC UNIT HEATERS							
• Check for unusual noise and excessive vibration.						M	
• Check for blades and unit housing for accumulation of foreign material and clean.					M		
• Inspect unit housing for paint chipping or corrosion.						M	
• Inspect heating element. Clean if necessary.						M	
• Inspect all wires and contacts for proper connection.						E	
• Check all bolts and connections for tightness.					M		

MAINTENANCE BUILDING (040)
ELEVATOR
040-172-01-0000

MAINTENANCE TASK	FREQUENCY						
	D	W	M	Q	SA	A	0
ELEVATOR							
• Check car door for proper operation. Adjust belts if necessary.				M			
• Inspect pump and pump motor for overheating, noise or vibration.				M			
• Test door interlock circuits.					E		
• Examine car guide shoes for excessive wear.					M		
• Test controller in accordance with manufacturer's recommendations.						M	
LUBRICATION							
• Lubricate car switch and car buttons.					M		
• Check jack packing for excessive oil seepage.							M

MAINTENANCE BUILDING (040)
CIRCULATING FANS
040-319-01-0000 THROUGH 040-319-11-0000

MAINTENANCE TASK	FREQUENCY						
	D	W	M	Q	SA	A	0
CIRCULATING FANS							
• Check for unusual noise and excessive vibration.		O					
• Inspect fan blades, shaft, etc. for corrosion or accumulated foreign matter and clear.					M		
• Check all bolts and connections for tightness.					M		
LUBRICATION							
• Should the gearbox require disassembly, the lubricant must be replenished. Check manufacturer's instructions for warnings and limitations.							M

ADMINISTRATION BUILDING (060)
SEWAGE PUMPS
060-015-01-0000 AND 060-015-02-0000

MAINTENANCE TASK	FREQUENCY						
	D	W	M	Q	SA	A	0
SUBMERSIBLE PUMP							
• Check impeller suction-side clearance gap for damage of excessive wear						M	
• Check supply cable for tears, scratches or blistering						M	
• Measure insulation resistance						E	
LUBRICATION							
• Change oil in accordance with manufacturer's recommendations							O

ADMINISTRATION BUILDING (060)
LABORATORY COMPRESSED AIR SYSTEM
060-020-01-0000 AND 060-020-02-0000

MAINTENANCE TASK	FREQUENCY						
	D	W	M	Q	SA	A	0
COMPRESSOR UNIT							
• Check temperature of compressor pedestal body bearing housings			O				
NOTE If bearing temperature exceeds 140°F (60°C) shut down compressor immediately and determine cause							
• Check that differential between seal water inlet and outlet temperature does not exceed 30°F (17°C)							O
• Check stability of discharge pressure							O
• Check for restrictions in air inlet line							
• Check stuffing box packing for proper leakage					M		
• Check pilot pressure switches for proper operation					M		
• Check seal water solenoid valve operation					M		
• Clean and inspect drain taps					M		
• Check pressure drop across heat exchanger					M		
• Check screens in seal line strainers. Clean if necessary					M		
• Check condition of separator and receiver gauge glasses					M		
• Clean and inspect ball float valves in separators						M	
• Check for proper operation of separator and receiver high water level probes						M	
• Clean and check inlet check valves and discharge check valves. Inspect hinge pins, pivots, springs and clapper nut						M	
• Check dryers for proper operation						M	
• Inspect compressor coupling sleeves on base-mounted unit						M	
• Check compressor stuffing box and replace if necessary						M	

ADMINISTRATION BUILDING (060)
LABORATORY COMPRESSED AIR SYSTEM
060-020-01-0000 AND 060-020-02-0000

MAINTENANCE TASK	FREQUENCY						
	D	W	M	Q	SA	A	0
LUBRICATION							
• Lubricate motor bearings in accordance with manufacturer's recommendations					E		

ADMINISTRATION BUILDING (060)
RETURN EXHAUST FANS
060-049-01-0000 AND 060-049-02-0000

MAINTENANCE TASK	FREQUENCY						
	D	W	M	Q	SA	A	0
IN-LINE CENTRIFUGAL FANS							
• Check belts for tightness		O					
• Clean wheel and housing							M
• Check fasteners for tightness		M					
LUBRICATION							
• Lubricate motor and bearings in accordance with manufacturer's recommendations							E

ADMINISTRATION BUILDING (060)
AIR CONDITIONING UNIT
060-051-01-0000

MAINTENANCE TASK	FREQUENCY						
	D	W	M	Q	SA	A	0
AIR CONDITIONING UNIT							
• Filter			M				
• Inspect unit coils. Clean if necessary					M		
• Inspect unit casing and accessories for paint chipping or corrosion. If damage is found, clean and repaint						M	
• Humidifier			M				
• Clean fan wheels and fan shaft. If rust is found on the fan shaft, remove with emery cloth and recoat			M				
• Check alignment of fan and motor sheaves. Adjust if necessary			M				
• Check damper linkage, set screws and blades adjustment for proper operation						M	
• Check drain line for sludge or other foreign material					M		
• If noises develop, check all bearings races and locking devices for tightness, check the fan for worn bearings, and for adequate clearance of rotating members			M				
• Check all electrical terminals for tightness and electrical wires for damage					E		
• Check for proper operation of controller temperature sensor and damper control							M
ELECTRICAL REHEAT COIL							
• Check heater element for dirt and foreign matter					M		
• Inspect all connections for tightness					E		
• Check wire and cable insulation for deterioration						E	
LUBRICATION							
• Lubricate electric motor in accordance with manufacturer's instruction							E
• Lubricate inlet vane and damper bearings						M	

ADMINISTRATION BUILDING (060)
CHILLER
060-052-01-0000

MAINTENANCE TASK	FREQUENCY						
	D	W	M	Q	SA	A	0
WATER CHILLER UNIT							
• Inspect control center			O				
• Check safety and operating controls for proper operation			O				
• Change volute drain strainer and refrigerant filter							M
• Inspect purge pump for air leakage							M
• Inspect refrigerant flow chamber. Check valve travel and gasket			M				
• Charge the system with refrigerant							M
• Inspect and clean cooler tubes					M		
• Clean condenser tubes						M	
• Inspect starting equipment				E			
LUBRICATION							
• Check oil level in reservoir sight glass. Add oil if necessary in accordance with manufacturer's recommendations		O					
• Lubricate motor in accordance with manufacturer's recommendations			E				

ADMINISTRATION BUILDING (060)
CHILLED WATER PUMPS
060-053-01-0000 AND 060-053-02-0000

MAINTENANCE TASK	FREQUENCY						
	D	W	M	Q	SA	A	0
IN-LINE PUMP							
• Inspect motor bearings for overheating. Temperature should not exceed 160°F			O				
• Check for noise, which may indicate trapped air or hydraulic problem		O					
• Check suction pressure							M
• Check discharge pressure							M
LUBRICATION							
• Lubricate motor bearings in accordance with manufacturer's recommendations							E

ADMINISTRATION BUILDING (060)
EXHAUST FANS
060-056-01-0000 TO 060-056-37-0000

MAINTENANCE TASK	FREQUENCY						
	D	W	M	Q	SA	A	0
CENTRIFUGAL FANS							
• Check variable inlet vanes for freedom of operation and wear		O					
• Check wheel, housing, bolts and set screws for tightness		M					
• Clean wheel and housing							M
• Check isolation bases, springs and rubber isolators							M
ROOF-MOUNTED FANS							
• Check belts for tightness	O						
• Clean wheel and housing							M
• Check fasteners for tightness	M						
PROPELLER FANS							
• Clean wheel and housing							M
• Check fasteners for tightness		M					
LUBRICATION							
• Lubricate motors and bearings in accordance with manufacturer's recommendations							E

ADMINISTRATION BUILDING (060)
CONDENSER WATER PUMP
060-083-01-0000

MAINTENANCE TASK	FREQUENCY						
	D	W	M	Q	SA	A	0
BASE-MOUNTED PUMP							
• Visually check for leaks		O					
• Adjust gland as necessary to maintain slight leakage		M					
• Hand test bearing housing for signs of overheating		M					
• Measure bearing temperature			O				
• Check bearing packing. Replace if necessary					M		
• Check pump and motor alignment. Check bolts for tightness					M		
• Check coupling for wear					M		
• Check rotating element for wear						M	
• Check wear ring clearances						M	
• Measure total dynamic suction and discharge head						M	
LUBRICATION							
• Clean and re-grease bearings in accordance with manufacturer's recommendations							M

ADMINISTRATION BUILDING (060)
RETENTION BASIN VALVE
060-125-01-0000

MAINTENANCE TASK	FREQUENCY						
	D	W	M	Q	SA	A	0
LUBRICATION							
• Lubricate packing other than PTFE							M
• Lubricate plug journals							M
• Lubricate electric operator in accordance with manufacturer's recommendation							E

ADMINISTRATION BUILDING (060)
HEATING BOILER
060-134-01-0000

MAINTENANCE TASK	FREQUENCY						
	D	W	M	Q	SA	A	0
BOILER							
• Confirm pilot flame is correct		O					
• Check that main burners light smoothly and flame is clean and normal		O					
• Check controls for proper operation		O					
• Check for obstructions to air and draft hood relief openings. Remove obstructions or clean as necessary		M					
• Check float-type water level controls for proper operation			O				
• Test all boiler and burner controls. Test all safety devices					M		
• Check boiler input and flame for proper combustion					O		
• Arrange inspection by local gas utility company						M	
VENTING SYSTEM							
• Check flue gas passages and exterior surfaces of boiler tubes			M				

ADMINISTRATION BUILDING (060)
LABORATORY VACUUM SYSTEM
060-141-01-0000 AND 060-141-02-0000

MAINTENANCE TASK	FREQUENCY						
	D	W	M	Q	SA	A	0
VACUUM PUMPS							
• Check temperature of bearing housing			O				
NOTE If bearing housing temperature exceeds 140°F (60°C), shut down vacuum pump immediately and determine cause							
• Check that differential between seal water inlet and outlet temperature does not exceed 30°F (17°C)							M
• Check for stability of vacuum							M
• Check for proper operation of pilot vacuum switches					M		
• Check operation of seal water solenoid valves					M		
• Check condition of screens in seal line strainers. Clean if necessary					M		
• Check condition of vacuum control tank gauge glass					M		
• Clean and check operation of inlet check valves. Inspect hinge pines, pivots, springs and clapper nut for wear						M	
• Check vacuum control tank relief valve for proper operation						M	
• Inspect coupling inserts on base-mounted pumps						M	
LUBRICATION							
• Lubricate motor bearings in accordance with manufacturer's recommendations					E		

ADMINISTRATION BUILDING (060)
ELEVATORS
060-172-01-0000 AND 060-172-02-0000

MAINTENANCE TASK	FREQUENCY						
	D	W	M	Q	SA	A	0
ELEVATOR							
• Check car door for proper operation. Adjust belts if necessary				M			
• Inspect pump and pump motor for overheating, noise or vibration				M			
• Test door interlock circuits					E		
• Examine car guide shoes for excessive wear					M		
• Test controller in accordance with manufacturer's recommendations						M	
LUBRICATION							
• Lubricate car switch and car buttons					M		
• Check jack packing for excessive oil seepage							M

ADMINISTRATION BUILDING (060)
AIR PURIFICATION UNIT
060-194-01-0000

MAINTENANCE TASK	FREQUENCY						
	D	W	M	Q	SA	A	0
PURIFICATION UNIT							
• Check particulate filters for proper air flow. Replace if required			O				
• Check air filter gauge for proper operation							M
• Check belt for tightness							M
LUBRICATION							
• Lubricate bearings with grease as recommended by manufacturer. Do not over grease				M			

ADMINISTRATION BUILDING (060)
DEIONIZED WATER SYSTEM
060-206-01-0000

MAINTENANCE TASK	FREQUENCY						
	D	W	M	Q	SA	A	0
CONDENSING TUBES							
• Clean with weak caustic solution							M
EXHAUST SYSTEM							
• Check for obstructions to the blower or water ejector							M
LUBRICATION							
• Lubricate direct-drive motor in accordance with the manufacturer's recommendation							E

ADMINISTRATION BUILDING (060)
AUTOCLAVE
060-226-01-0000

MAINTENANCE TASK	FREQUENCY						
	D	W	M	Q	SA	A	0
STERILIZER							
• Clean sediment screen	M						
• Clean exterior	M						
• Check safety valve		M					
• Clean chamber interior		M					
• Clean loading cars and transfer carriages		M					
• Check battery back-up system		M					
• Clean steam and water strainers				M			
STEAM GENERATOR							
• Perform maintenance in accordance with manufacturer's recommendations							M

ADMINISTRATION BUILDING (060)
GAS CHROMATOGRAPH MASS SPECTROMETER
060-232-01-0000

MAINTENANCE TASK	FREQUENCY						
	D	W	M	Q	SA	A	0
MASS SPECTROMETER							
• Check operation of cooling fans	O						
• Check air filter					M		
• Check calibration gas vial, fill or replace as necessary							M
• Check rotary vacuum pump oil level	O						
• Purge rotary vacuum pump oil		M					
• Clean ion volume				M			
• Clean ion source				M			
• Clean quadrupole mass analyzer				M			
LUBRICATION							
• Lubricate rotary vacuum pump. Change oil				M			

ADMINISTRATION BUILDING (060)
HOT WATER PUMPS
060-308-01-0000 AND 060-308-04-0000

MAINTENANCE TASK	FREQUENCY						
	D	W	M	Q	SA	A	0
IN-LINE PUMP							
• Inspect motor bearings for overheating. Temperature should not exceed 160°F			O				
• Check for noise, which may indicate trapped air or hydraulic problem		O					
• Check suction pressure							M
• Check discharge pressure							M
LUBRICATION							
• Lubricate motor bearings in accordance with manufacturer's recommendations							E

ADMINISTRATION BUILDING (060)
FAN COIL COOLING UNITS
060-309-01-0000 AND 060-30904-0000

MAINTENANCE TASK	FREQUENCY						
	D	W	M	Q	SA	A	0
COIL UNITS							
• Check for excessive condensation. May be due to chilled water running through the coils when unit fan is off							M
• Clean or replace filter							M
• Check drain pan and drain line for obstructions				M			
• Clean fan wheel				M			
• Clean electric heater							M

DIFFUSED AIR REACTORS (025)
SLUICE GATES
025-012-01-0000 THROUGH 025-012-23-0000

MAINTENANCE TASK	FREQUENCY						
	D	W	M	Q	SA	A	O
SLUICE GATES							
• Clean stem			O				
NOTES The frequency for cleaning the sluice gate stem applies to new equipment. The actual required cleaning frequency will be determined based on use of equipment.							
• Clean gate guide groove and stem guide of any foreign matter							O
• Check gate guide groove and stem guide for proper alignment						M	
• Check wedge attaching studs and locknuts for proper tightness. Adjust if required						M	
• Operate the entire gate assembly through one full cycle open and closed. Look for and remove any foreign objects against the gate disc and frame				O			
• Examine the thrust nut and wedges to ensure their proper position and condition. Check the HY-Q seal (if any). Clean and/or adjust if necessary					M		
• Examine the concrete support structures for any evidence of loss of integrity						O	
• Check tightness of stem guide anchorages and attaching hardware. Wipe away any debris and inspect for abnormal wear of stem guide bushing					O		
• Inspect stem guide coating and repaint as necessary						M	
• Inspect the couplings and thrust nuts. Inspect keys and set screws for position and tightness					M		
• Check tightness of anchorage hardware and general condition of hoist brackets or pedestal					M		

DIFFUSED AIR REACTORS (025)
SLUICE GATES
025-012-01-0000 THROUGH 025-012-23-0000 (cont.)

MAINTENANCE TASK	FREQUENCY						
	D	W	M	Q	SA	A	O
SLUICE GATES (cont.)							
• Inspect the surface of the stem for any signs of excessive wear, corrosion, abrasion, or other abnormalities. Look for any metal filings or grit in grease						M	
ELECTRIC MOTOR							
• Inspect the electric operator. Check attachment hardware, handwheel attachment, and all conduit entries. Ensure that all entries points to the operator are sealed tight. Operate the electric operator through one full gate cycle open and closed. Observe the feel and sound of the operator under load					E		
• Replace the O-ring gasket for the compartment cover					E		
• See manufacturer's recommendations for inspecting electrical connections					E		
• Refer to manufacturer's literature for trouble-shooting procedures							E
LUBRICATION							
• Check condition of lubricant					M		
• Clean and re-grease threaded portion of stem					M		
• Check gear case lubricant					M		

DIFFUSED AIR REACTORS (025)
SLIDE GATES
025-013-01-0000 THROUGH 025-013-22-0000

MAINTENANCE TASK	FREQUENCY						
	D	W	M	Q	SA	A	O
SLIDE GATES							
• Clean stem			O				
NOTE The frequency for cleaning the sluice gate stem applies to new equipment. The actual required cleaning frequency will be determined based on use of equipment.							
• Clean gate guide groove and stem guide of any foreign matter							O
• Check gate guide groove and stem guide for proper alignment and bolts for tightness						M	
• Check wedge attaching studs and locknuts for proper tightness. Adjust if required						M	
ELECTRIC MOTOR							
• Clean geared limit and torque switch contact. Use mineral spirits on lint-free cloth					E		
• Check limit switch gear box for damage; replace if necessary					E		
• Check wiring and push-button contacts					E		
• Check bolts between the actuator and the valve/gearbox for tightness					E		
• Refer to manufacturer's literature for trouble-shooting procedures							E
LUBRICATION							
• Lubricate drive sleeve top bearing			M				
• Lubricate threaded portion of stem			M				
• Check condition of lubricant					M		
• Lubricate actuator through grease nipple					M		

DIFFUSED AIR REACTORS (025)
MECHANICAL MIXERS
025-028-01-0000 THROUGH 025-028-16-0000

MAINTENANCE TASK	FREQUENCY						
	D	W	M	Q	SA	A	O
MECHANICAL MIXERS							
• Check for excessive noise and vibration	O						
• Check for proper alignment					M		
• Check rotor for bolt loosening, obstructions and damage					M		
• Check operating temperature of motor	O	M					
NOTE Operators are required to manually check the temperature of motor bearings daily. Mechanical Maintenance Personnel are required to check the temperature of motor bearings with a temperature sensing device, as recommended by the motor manufacturer weekly.							
• Clean or replace oil filter		M					
• Refer to manufacturer's literature for trouble-shooting procedures							M
LUBRICATION							
• Lubricate upper and lower motor bearings; inject new grease until old is forced out of drain plug						E	
• Lubricate lower gear unit bearing; inject approximately 5 ounces of grease						E	
• Check the oil level in gear drive oil reservoir	O						
• Change oil lubricant in gear drive					E		
• Lubricate flexible coupling						E	

DIFFUSED AIR REACTORS (025)
F.B.S. PUMPS
025-016-01-0000 THROUGH 025-016-03-0000

MAINTENANCE TASK	FREQUENCY						
	D	W	M	Q	SA	A	O
F.B.S. PUMPS							
• Check for unusual noise and excessive vibration	O						
• Wash down pump with pressure hose					M		
• Check and/or clean float switches. Visually inspect and work in sequence to check pump operation				M			
• Perform overall visual inspection						M	
• Refer to manufacturer's literature for repairs requiring removal of pump, inspection tips and trouble-shooting procedures							M
LUBRICATION							
• Check seal oil. Drain and replace if oil is discolored or emulsified. See manufacturer's literature for proper lubricant and replacement procedure						M	

DIFFUSED AIR REACTORS (025)
INSERT VENTURI METERS
025-036-11-0000 THROUGH 025-036-16-0000

MAINTENANCE TASK	FREQUENCY						
	D	W	M	Q	SA	A	O

DIFFUSED AIR REACTORS (025)
ALKALINITY SAMPLING PUMPS
025-032-01-0000 THROUGH 025-032-08-0000 AND
057-032-01-0000

MAINTENANCE TASK	FREQUENCY						
	D	W	M	Q	SA	A	O
SAMPLE PUMP							
• Perform overall visual inspection						M	
• Wash down exterior of pump with high-pressure hose				M			
• Inspect entire length of power cable for evidence of chafing, cuts or abrasion. Inspect area where cable enters terminal chamber lid				M			
• Inspect volute for plugging. Remove any debris				M			
• Refer to manufacturer's literature for trouble-shooting procedures							M
LUBRICATION							
• Check oil level in scaling chamber (refer to manufacturer's literature)				M			

DIFFUSED AIR REACTORS (025)
ALKALINITY MONITORING SYSTEM

MAINTENANCE TASK	FREQUENCY						
	D	W	M	Q	SA	A	O
FILTERS							
• Observe and verify filter gauge pressures	O						
• Clean filters (see manufacturer's literature for details)			M				
MULTI-STREAM SEQUENCING UNIT (M.S.U.)							
• Observe tubing and fittings for leaks	O						
• Observe solenoid valves for leaks or plugs	O						
• Verify filtrate flow rates on rotameters	O						
• Observe reservoirs for leaks, debris, plugging	O						
• Clean as needed (see manufacturer's literature)							M
ALKALINITY ANALYZER							
• Observe for leaks, plugging or fouling	O						
• Observe a complete titration cycle	O						
• Inspect and clean tubing. Clean reaction cell and electrode. Set titrant pump seals. Replace titrant solution calibrate electrode. Calibrate analyzer			I				
• Replace pH electrode				I			
• Replace standard pump tubing						I	
• Replace titrant pump seals and drive belt						I	

DIFFUSED AIR REACTORS (025)
DISSOLVED OXYGEN ANALYZERS
025-076-01-0000 THROUGH 025-076-12-0000

MAINTENANCE TASK	FREQUENCY						
	D	W	M	Q	SA	A	O
DO ANALYZERS							
• Inspect membrane for accumulation. Clean if necessary					I		
• Replace membrane as necessary for proper operation							I
• Clean anode					I		
• Replace anode every 2-3 years							I
• See manufacturer's literature for trouble-shooting procedures							I

DIFFUSED AIR REACTORS (025)
MAGNETIC FLOW METERS
025-036-02-0000 THROUGH 025-036-09-0000
025-036-80-0000 THROUGH 025-036-83-0000

MAINTENANCE TASK	FREQUENCY						
	D	W	M	Q	SA	A	O
MAGNETIC FLOW METERS							
• Check for leak on all connections	O						
• Verify performance periodically. See manufacturer's instructions							I
• Visually inspect the inner meter walls for accumulation						I	
• Refer to manufacturer's literature for trouble-shooting and detailed maintenance procedures							I

BLOWER BUILDING (058)
PROCESS AIR BLOWERS
058-018-01-0000 THROUGH 058-018-04-0000

MAINTENANCE TASK	FREQUENCY						
	D	W	M	Q	SA	A	O
AIR BLOWERS							
• Check for unusual noise and excessive vibration; refer to manufacturer's literature for possible cause and corrective action	O						
• Check bearing temperature; bearing temperature should not exceed 190 degrees F	O	M					
• Check coupling for alignment and wear					M		
• Check alignment of motor and drive shaft					M		
• Refer to manufacturer's literature for trouble-shooting procedures							M
MOTOR							
• Inspect for cleanliness, moisture, overloading, temperature and vibration	O						
• Test insulation resistance of motor winding. Refer to manufacturer's literature for instruction						E	
• Check bearing temperature. Bearing temperature should be less than 200 degrees F	O	M					
• Check winding temperature rise not in excess of rated value. Use a thermoscope	O	M					
• Check air gap					M		
• Clean motor inside and outside. See manufacturer's literature for instructions							E
• Refer to manufacturer's literature for trouble-shooting procedures							E
LUBRICATION							
• Check oil level	O						
• Re-lubricate the blower bearing. See manufacturer's literature for instructions					M		

BLOWER BUILDING (058)
PROCESS AIR BLOWERS
058-018-01-0000 THROUGH 058-018-04-0000 (cont.)

MAINTENANCE TASK	FREQUENCY						
	D	W	M	Q	SA	A	O
LUBRICATION (cont.)							
• Lubricate coupling in accordance with the manufacturer's instructions					M		
• Lubricate motor bearings in accordance with manufacturer recommendation. Do not over lubricate					E		

BLOWER BUILDING (058)
FAN-POWERED AIR TERMINAL
058-333-01-0000

MAINTENANCE TASK	FREQUENCY						
	D	W	M	Q	SA	A	O
FAN-POWERED AIR TERMINAL							
• Clean, inspect and check tightness of the external linkage and ball joints						M	
• Check control components for cracked or leaking tubing connections, replace tubing as necessary						M	
• Check control components for loose electrical connections						E	
• Check all electrical connections for tightness						E	
• Check air filters for cleanliness						M	
• Clean hot water coil depending upon severity of operating conditions							M
• See manufacturer's literature for trouble-shooting procedures							M
LUBRICATION							
NOTE The volume damper bearings require no lubrication and should not be lubricated as they could deteriorate per manufacturer's recommendations.							
• Lubricate external linkage and ball joints with a silicone base spray						M	

BLOWER BUILDING (058)
HOISTING EQUIPMENT
058-009-01-0000

MAINTENANCE TASK	FREQUENCY						
	D	W	M	Q	SA	A	O
OVERHEAD CRANE - GENERAL							
NOTE							
Refer to manufacturer's literature for inspection and maintenance checklist.							
• Check all functional operating mechanisms for any mal-adjustments that may interfere with proper operation	O		M				
• Check that warning labels, push-button markings or capacity markings have not been removed or are illegible					M		
• Check bolts, nuts and rivets for tightness					M		
• Check pins, bearings, shafts and gears for excessive wear, cracks, distortion and corrosion; replace defective parts					M		
• Check brake system for excessive wear and drift	O					M	
• Check limit switches for foreign debris, corrosion, tightness of wire termination points, proper settings and operation		E					
• Check electric motor brakes for proper magnetic air gap, shoe wear and equalization, brake wheel and shoe clearance, disc brakes for lining wear, resistor connections and tightness of wire terminations			E				
• Check all wire termination points of Eddy current brakes for tightness. Vacuum or blow out with dry, clean air				E			
• Check fuses and wire terminations of brake rectifier assemblies			E				
• Check overall condition of control panels and master switches. See manufacturer's literature			E				
• Inspect the bridge on regular schedule. Check wheel axle adjustment bolts and all connections are tight. Check wheel tread surfaces and truck sides for damage or wear. Replace worn or damaged parts							M
• Complete inspection, disassembly and maintenance every five years							M
• For detailed maintenance procedures, refer to manufacturer's literature							M

BLOWER BUILDING (058)
HOISTING EQUIPMENT
058-009-01-0000 (cont.)

MAINTENANCE TASK	FREQUENCY						
	D	W	M	Q	SA	A	O
MOTORS							
• Vacuum or blow out motor with clean, dry air. Wipe any dirt from creepage surfaces between exposed conductors and grounded parts					E		
• Check insulation resistance of stator and rotors with 500-volt Megger						E	
• Check brushes for free movement in brush holders, at least 80% full brush contact with slip rings				E			
RESISTORS							
• Check wire terminations at brush holders for tightness				E			
• Check resistor connection, jumpers and rod bolts for tightness				E			
• Check condition of resistor contact surfaces for burning or pitting				E			
COLLECTORS							
• Clean any accumulation of dust or dirt from collector					E		
• Check collector shoes. Replace worn collector shoes					E		
• Check spring tension to provide proper pressure on every collector shoe. Replace worn springs					E		
• Check for free mechanical action of collector head to conductor. Clean and lubricate where necessary					E		
• Re-align collectors vertically and horizontally to the collector mount and to the conductor					E		
CONDUCTORS							
• Clean contact surface and cover					E		
• Check alignment of conductor. Relieve hangar clamps to permit sliding action					E		
• Check cover for wear and misalignment at joints. Replace unduly worn sections					E		

BLOWER BUILDING (058)
HOISTING EQUIPMENT
058-009-01-0000 (cont.)

MAINTENANCE TASK	FREQUENCY						
	D	W	M	Q	SA	A	O
CONDUCTORS (cont.)							
• Replace where bar has been bent or broken. See manufacturer's literature					E		
HOOKS							
• Check for deformation and chemical damage	O		M				
• Check throat openings; replace if bent from normal opening	O		M				
• Check for twists of hook eye or hook; replace if twisted	O		M				
• Check if hook eye or hook is bent; replace if bent	O		M				
• Check for hinge action wear at point of contact and elongation of hook eye	O		M				
• Check hooks for craks in accordance with manufacturer's crack detecting procedure						M	
LOAD BEARING CABLE							
• Check load bearing cable for wear, twist, distortion, kinks, strand breaks, improper dead ending, replace cable if conditions described above are excessive	O		M				
LUBRICATION							
NOTE See manufacturer's literature for recommended lubricants.							
• Lubricate bridge and trolley wheel bearings				M			
• Lubricate line shaft pillow block bearings, flange cartridge bearings, stub shaft bearings and drum end bearings				M			
• Lubricate geared couplings				M			
• Check gearcase oil. Add oil in accordance with manufacturer's specifications			M				
• Lubricate brake pins, bushings and linkages every two months							M

BLOWER BUILDING (058)
HOISTING EQUIPMENT
058-009-01-0000 (cont.)

MAINTENANCE TASK	FREQUENCY						
	D	W	M	Q	SA	A	O
LUBRICATION (cont.)							
• Change hoist gearcase oil					M		
• Lubricate upper sheave bearings, bottom block sheave bearings and hook thrust bearings				M			
• Lubricate limit stop lever				M			
• Lubricate hoist cable			M				
• Lubricate upper and lower hook block					M		
• Inspect bridge and trolley ring gears and drive pinions every fifteen days and lubricate as required							M
• Inspect hoist drum gear reduction set every three months. Drain and refill yearly						M	
• Inspect parallel shaft and worm drive reducer every three months. See manufacturer's literature for lubrication interval							M

BLOWER BUILDING (058)
OVERHEAD ROLLING DOOR
058-176-01-0000

MAINTENANCE TASK	FREQUENCY						
	D	W	M	Q	SA	A	O
ROLLING DOOR							
• Inspect visually for cleanliness and ease of operation	O						
• Paint all non-lubricated steel surfaces with a good grade of rust-inhibiting, metallic based paint. More frequent painting may be required in corrosive environments						M	
• Clean accumulated grease and dirt from guides and debris from bottom of guides							M
• Inspect roller chain and gear reducer. Roller chain must remain taut for proper operation			M				
• Adjust spring in accordance with manufacturer's recommendations							M
LUBRICATION							
• Check oil level in gear reducer						M	
• Drain, flush and refill reducer with proper lubricant after a maximum of 500 hours; more often if inspections reveal sludge or condensation							M
• Lubricate curtain guides and the gear teeth in the chain hoist					M		
• See manufacturer's literature for recommended lubricants							M

BLOWER BUILDING (058)
GRINDER PUMP
058-015-01-0000

MAINTENANCE TASK	FREQUENCY						
	D	W	M	Q	SA	A	O
GRINDER PUMP							
• Check for unusual noise, vibration and heating of motor and reducer	O						
• Inspect cutters for damaged teeth					M		
• Inspect cutters, spacers and shafts for restrictive debris							M
• Inspect alignment and rigidity of grinder shafts					M		
• Inspect shaft and bearing connection					M		
• Inspect all parts of reducer. Replace defective parts if necessary					M		
• Clean motor and reducer with mineral spirits				E			
• See manufacturer's literature for trouble-shooting and disassembly procedures							M
LUBRICATION							
• Lubricate shaft bearings in accordance with manufacturer's recommendation. Do not over grease		M					
• Lubricate motor bearings in accordance with manufacturer's recommendation. Do not over grease				E			
• Refer to manufacturer's literature for trouble-shooting procedures			M				

BLOWER BUILDING (058)
ACTIVATED CARBON AIR FILTRATION SYSTEM
058-102-01-0000

MAINTENANCE TASK	FREQUENCY						
	D	W	M	Q	SA	A	O
F.R.P. PRESSURE BLOWER							
NOTE							
Maintenance may be more frequent depending upon operating conditions.							
• Check fan wheel for any build-up of foreign material or excessive wear					M		
• Check for unusual noise and/or excessive vibration	O						
• Check V-belt drive for proper alignment and tension. Replace worn belts					M		
• Refer to manufacturer's literature for repair/replace procedures							M
• Calibrate differential pressure gages						I	
LUBRICATION							
• Lubricate bearings in accordance with manufacturer's recommendations. Do not over-lubricate							M

BLOWER BUILDING (058)
ROOF EXHAUST FANS
058-050-01-0000 THROUGH 058-050-07-0000

MAINTENANCE TASK	FREQUENCY						
	D	W	M	Q	SA	A	0
ROOF EXHAUST FAN							
• Check for unusual noise and excessive vibration. If noises develop, check the fan for worn belt and bearings, proper installation and anchoring and for adequate clearance of rotating members.						M	
• Clean the blades from accumulated foreign material.						M	
• Check V-Belt tension. If adjustment is made, check pulley alignment.						M	
• Check condition of belt on belt driven unit. Replace if necessary.						M	
NOTE If unit is to be left idle for an extended period, remove belts and store in cool, dry place.							
• Check motor for free movement and motor bearings for excessive wear.						E	
• Check shafts for alignment and sheaves for chipping, dents or rough surface.						M	
LUBRICATION							
• Consult information printed on motor for lubrication instructions.						M	

BLOWER BUILDING (058)
AIR CONDITIONING UNIT
058-051-01-0000

MAINTENANCE TASK	FREQUENCY						
	D	W	M	Q	SA	A	0
AIR CONDITIONING UNIT							
• Inspect air filters and replace if needed.			M				
• Inspect unit coils. Clean if necessary.					M		
• Inspect unit casing and accessories for paint chipping or corrosion. If damage is found, clean and repaint.						M	
• Clean fan wheels and fan shaft. If rust is found on the fan shaft, remove with emery cloth and recoat.						M	
• Check condensate drain line and drain pan for foreign material.						M	
• Check damper linkage, setscrews and blade adjustment for proper operation.						M	
• Check refrigeration system for leaks.				M			
• Check thermostat control for proper operation. Refer to manufacturer's literature for instructions.							I
• Refer to manufacturer's literature for trouble-shooting procedures.							M
• Inspect the activated carbon canister and replace if necessary. Refer to manufacturer's literature for replacing procedure.							M
FAN BEARINGS							
• If noises develop, check all bearing races and locking devices for tightness, check the fan for worn bearings and for adequate clearance of rotating members.					M		
FAN MOTOR							
• Check for excessive vibration and high temperature.			O				
LUBRICATION							
• Lubricate fan bearings. Do not over lubricate. Add grease only while fan is operating.					M		
• Lubricate motor in accordance with manufacturer instruction.					E		
• Lubricate inlet vane and outlet damper bearings with a few drops of nondetergent SAE 20 oil.						M	

BLOWER BUILDING (058)
SUPPLY BLOWER
058-048-01-0000

MAINTENANCE TASK	FREQUENCY						
	D	W	M	Q	SA	A	O
SUPPLY BLOWER							
• Check for unusual noise and excessive vibration; refer to manufacturer's literature for possible cause and corrective action	O						
• Check bearing temperature; bearing temperature should be less than 190 degrees F	O	M					
NOTES Operators are required to manually check the temperature of blower bearings daily. Mechanical Maintenance Personnel are required to check the temperature of blower bearings with a temperature sensing device, as recommended by the manufacturer weekly.							
• Check coupling for alignment and wear					M		
• Refer to manufacturer's literature for trouble-shooting procedures							M
• Check alignment of motor and driven shaft					M		
• Clean process air filter with water or compressed air							M
NOTE Do not clean in gasoline or other petroleum solvent.							
MOTOR							
• Inspect for cleanliness, moisture, overloading, temperature and vibration	O						
• Test insulation resistance of motor winding. Refer to manufacturer's literature for instructions						E	
• Check bearing temperature. Bearing temperature should be less than 200 degrees F	O	M					
NOTES Operators are required to manually check the temperature of blower bearings daily.							

BLOWER BUILDING (058)
SUPPLY BLOWER
058-048-01-0000 (Cont.)

MAINTENANCE TASK	FREQUENCY						
	D	W	M	Q	SA	A	O
NOTES (cont.)							
Mechanical Maintenance Personnel are required to check the temperature of motor bearing with a temperature sensing device, as recommended by the motor manufacturer weekly.							
MOTOR (cont.)							
• Refer to manufacturer's literature for trouble-shooting procedures							E
LUBRICATION							
• Check oil level; keep filled to sight glass level; do not overfill	O						
• Drain and replace the bearing oil					M		
• Lubricate coupling in accordance with the manufacturer's instructions					M		
• Lubricate motor bearings in accordance with manufacturer recommendation. Do not over grease					E		

NITRIFICATION PUMPING STATION (057) AND JUNCTION CHAMBER NO. 5 (050)
SLUICE GATES
050-012-01-0000 THROUGH 050-012-04-0000

MAINTENANCE TASK	FREQUENCY						
	D	W	M	Q	SA	A	O
SLUICE GATES							
• Clean stem			O				
NOTES The frequency for cleaning the sluice gate stem applies to new equipment. The actual required cleaning frequency will be determined based on use of equipment.							
• Clean gate guide groove and stem guide of any foreign matter							O
• Check gate guide groove and stem guide for proper alignment						M	
• Check wedge attaching studs and locknuts for proper tightness. Adjust if required						M	
• Operate the entire gate assembly through one full cycle open and closed. Look for and remove any foreign objects against the gate disc and frame				O			
• Examine the thrust nut and wedges to ensure their proper position and condition. Check the HY-Q seal (if any). Clean and/or adjust if necessary					M		
• Examine the concrete support structures for any evidence of loss of integrity						O	
• Check tightness of stem guide anchorages and attaching hardware. Wipe away any debris and inspect for abnormal wear of stem guide bushing					O		
• Inspect stem guide coating and repaint as necessary						M	
• Inspect the couplings and thrust nuts. Inspect keys and set screws for position and tightness					M		
• Check tightness of anchorage hardware and general condition of hoist brackets or pedestal					M		

NITRIFICATION PUMPING STATION (057) AND JUNCTION CHAMBER NO. 5 (050)
SLUICE GATES
050-012-01-0000 THROUGH 050-012-04-0000 (cont.)

MAINTENANCE TASK	FREQUENCY						
	D	W	M	Q	SA	A	O
SLUICE GATES (cont.)							
• Inspect the surface of the stem for any signs of excessive wear, corrosion, abrasion, or other abnormalities. Look for any metal filings or grit in grease						M	
ELECTRIC MOTOR							
• Inspect the electric operator. Check attachment hardware, handwheel attachment, and all conduit entries. Ensure that all entries points to the operator are sealed tight. Operate the electric operator through one full gate cycle open and closed. Observe the feel and sound of the operator under load					E		
• Replace the O-ring gasket for the compartment cover					E		
• See manufacturer's recommendations for inspecting electrical connections					E		
• Refer to manufacturer's literature for trouble-shooting procedures							E
LUBRICATION							
• Check condition of lubricant					M		
• Clean and re-grease threaded portion of stem					M		
• Check gear case lubricant					M		

NITRIFICATION PUMPING STATION (057) AND JUNCTION CHAMBER NO. 5 (050)
MAGNETIC FLOW METERS
050-036-01-0000 AND 050-036-02-0000

MAINTENANCE TASK	FREQUENCY						
	D	W	M	Q	SA	A	O
MAGNETIC FLOW METERS							
• Check for leak on all connections	O						
• Verify performance periodically. See manufacturer's instructions							I
• Visually inspect the inner meter walls for accumulation						I	
• Refer to manufacturer's literature for trouble-shooting and detailed maintenance procedures							I

NITRIFICATION PUMPING STATION (057) AND JUNCTION CHAMBER NO. 5 (050)
SUMP PUMP
050-008-01-0000

MAINTENANCE TASK	FREQUENCY						
	D	W	M	Q	SA	A	O
SUMP PUMP							
• Check for unusual noise and excessive vibration; refer to manufacturer's literature for cause and corrective action	O						
• For maintenance requiring removal of pump, see manufacturer's literature							M
• Pressure-wash exterior of pump					M		
• Check float switch for build-up				M			
• Refer to manufacturer's literature for trouble-shooting procedures							M
LUBRICATION							
• Check seal oil						M	

NITRIFICATION PUMPING STATION (057) AND JUNCTION CHAMBER NO. 5 (050)
EXHAUST FAN
050-056-01-0000

MAINTENANCE TASK	FREQUENCY						
	D	W	M	Q	SA	A	O
EXHAUST FAN							
• Check for unusual noise and excessive vibration. If noises develop, check the fan for worn bearings, proper installation and anchoring and for adequate clearance of rotating members						M	
• Check condition of V-belt; replace if necessary					M		
• Check V-belt tension. If adjustment is made, check pulley alignment					M		
• Clean the centrifugal wheel, inlet and other moving parts				M			
LUBRICATION							
• Lubricate fan shaft ball bearings. Add grease with the fan running					M		
NOTE Use low pressure grease gun only.							
• Lubricate motor bearings. Apply grease while motor is running. Do not over grease					E		

NITRIFICATION PUMPING STATION (057) AND JUNCTION CHAMBER NO. 5 (050)
SLUICE GATES
057-012-01-0000 THROUGH 057-012-04-0000

MAINTENANCE TASK	FREQUENCY						
	D	W	M	Q	SA	A	O
SLUICE GATES							
• Clean stem			O				
NOTES The frequency for cleaning the sluice gate stem applies to new equipment. The actual required cleaning frequency will be determined based on use of equipment.							
• Clean gate guide groove and stem guide of any foreign matter							O
• Check gate guide groove and stem guide for proper alignment						M	
• Check wedge attaching studs and locknuts for proper tightness. Adjust if required						M	
• Operate the entire gate assembly through one full cycle open and closed. Look for and remove any foreign objects against the gate disc and frame				O			
• Examine the thrust nut and wedges to ensure their proper position and condition. Check the HY-Q seal (if any). Clean and/or adjust if necessary					M		
• Examine the concrete support structures for any evidence of loss of integrity						O	
• Check tightness of stem guide anchorages and attaching hardware. Wipe away any debris and inspect for abnormal wear of stem guide bushing					O		
• Inspect stem guide coating and repaint as necessary						M	
• Inspect the couplings and thrust nuts. Inspect keys and set screws for position and tightness					M		
• Check tightness of anchorage hardware and general condition of hoist brackets or pedestal					M		
• Inspect the surface of the stem for any signs of excessive wear, corrosion, abrasion, or other abnormalities. Look for any metal filings or grit in grease						M	

NITRIFICATION PUMPING STATION (057) AND JUNCTION CHAMBER NO. 5 (050)
SLUICE GATES
057-012-01-0000 THROUGH 057-012-04-0000 (cont.)

MAINTENANCE TASK	FREQUENCY						
	D	W	M	Q	SA	A	O
ELECTRIC MOTOR							
• Inspect the electric operator. Check attachment hardware, handwheel attachment, and all conduit entries. Ensure that all entries points to the operator are sealed tight. Operate the electric operator through one full gate cycle open and closed. Observe the feel and sound of the operator under load					E		
• Replace the O-ring gasket for the compartment cover					E		
• Refer to manufacturer's literature for trouble-shooting procedures							E
• See manufacturer's recommendations for inspecting electrical connections					E		
LUBRICATION							
• Check condition of lubricant					M		
• Clean and re-grease threaded portion of stem					M		
• Check gear case lubricant					M		

NITRIFICATION PUMPING STATION (057) AND JUNCTION CHAMBER NO. 5 (050)
NITRIFICATION PUMPS
057-331-01-0000 THROUGH 057-331-07-0000

MAINTENANCE TASK	FREQUENCY						
	D	W	M	Q	SA	A	O
NITRIFICATION PUMPS							
• Refer to manufacturer's literature for repair procedures							M
• Perform overall visual inspection						M	

13.2 KV METALCLAD SWITCHGEAR
044-039-01-0000; 010-039-01-0000 AND 047-040-01-0000

MAINTENANCE TASK	FREQUENCY						
	D	W	M	Q	SA	A	0
SWITCHGEAR - GENERAL							
• Remove dust from buses, connections, supports and enclosure surfaces with a vacuum cleaner and wipe clean with a solvent				E			
• Check labyrinths, grillwork and air passages for obstruction and accumulations of dirt				E			
• Clean interior of relays of dust and dirt				E			
NOTE For cleaning relays contacts use a flexible burnishing tool.							
• Check relays for correct operation. Refer to manufacturer's literature for instruction					E		
• Inspect contacts of control, transfer and instrument switches. Check switches for wear and pit marks				E			
• Check all wiring connections for tightness				E			
• Check for broken wire strands, pinched or damage insulation				E			
• Check insulation resistance of buses				E			
• Inspect battery and charging equipment. Remove accumulations of dust and dirt				E			
• For detailed repair or replacement procedures, refer to manufacturer's literature							E
• Refer to manufacturer's literature for trouble-shooting procedures							E
AIR CIRCUIT BREAKER							
• Check contact setting				E			
• Check contact for deterioration. Replace if necessary. Refer to manufacturer's literature for instruction				E			
• Check solenoid mechanism, latch check switch and mechanical timing. Adjust if necessary							E
• Clean arc chute and shields				E			

13.2 KV METALCLAD SWITCHGEAR
044-039-01-0000; 010-039-01-0000 AND 047-040-01-0000

MAINTENANCE TASK	FREQUENCY						
	D	W	M	Q	SA	A	0
AIR CIRCUIT BREAKER (continued)							
• Inspect arc chute for broken or cracked ceramic parts and for erosion of ceramics. Replace ceramic stack if necessary				E			
VACUUM CIRCUIT BREAKER							
• Check contact erosion. Refer to manufacturer's literature for instruction					E		
• Check solenoid mechanism, latch check switch and mechanical timing. Adjust if necessary					E		
• Lubricate operating mechanism					E		
VENTILATION							
• For maintenance and lubrication procedures for ventilation equipment, refer to the Chapter 10 Maintenance Tables for Screen and Grit Building No. 2							
LUBRICATION							
• Lubricate moving or mating mechanical parts of metalclad switchgear. Use a thin film of vaseline on disconnecting contacts				E			
• Lubricate sparingly pivot pins and latch rollers of circuit breaker mechanisms				E			
• Change grease for roller bearings on all circuit breaker mechanisms							E

OUTDOOR SUBSTATION TRANSFORMERS
044-038-01-0000 AND 044-038-02-0000; 046-038-01-0000 THROUGH 046-038-04-0000; 047-038-01-0000 AND 047-038-02-0000; 048-038-01-0000 AND 048-038-02-0000; 049-038-01-0000 AND 049-038-02-0000; 050-038-01-0000 AND 050-038-02-0000; 056-038-01-0000 AND 056-038-02-0000; 057-038-01-0000 AND 057-038-02-0000;058-038-01-0000 AND 058-038-02-0000; 059-038-01-0000 AND 059-038-02-0000; 041-038-01-0000 AND041-038-02-0000; 060-038-01-0000 AND 060-038-02-0000

MAINTENANCE TASK	FREQUENCY						
	D	W	M	Q	SA	A	O
TRANSFORMER							
• Check temperature. Refer to operation guide for temperature limits for any specific condition of loading							E
• Repaint the transformer if necessary							E
• Reset the semaphore and alarm switch of relief device after each operation							E
• Check tap changers for damage. Repair or replace if necessary					E		
• Check bushing for damage. Replace if necessary					E		
• Check insulating surface of the bushing				E			
• Check for leak of bushing. Repair if necessary					E		
• Check transformer tank for leak. Refer to manufacturer's literature for repair instruction							E
• Replace blown fuses							E
LUBRICATION							
• Maintain oil level		E					
• Check dialetric strength of oil. Purify oil if necessary					E		
• Check oil for carbonization and for sludge. Recondition oil if necessary					E		
NOTE Refer to manufacturer's literature for sampling oil from apparatus, for testing procedure and reconditioning.							

FILTER BUILDING NO. 1 AND NITRIFIED EFFLUENT CONDUIT (015)
SUMP PUMPS
015-008-01-0000 AND 015-008-03-0000

MAINTENANCE TASK	FREQUENCY						
	D	W	M	Q	SA	A	O
SUMP PUMP							
• Check operating temperature of motor bearings; bearing temperature should not be above 200 degrees F	O	M					
NOTES Operators are required to manually check the temperature of motor bearing daily. Mechanical Maintenance Personnel are required to check the temperature of motor bearings with a temperature sensing device, as recommended by the motor manufacturer weekly.							
• Check for unusual noise and excessive vibration; refer to manufacturer's literature for cause and corrective action	O						
• Check impeller clearance; adjust as required					M		
• Check coupling for wear and replace if necessary					M		
• Check for misalignment of coupling and shaft					M		
• Check shaft for straightness					M		
• Check water lubrication line damage and tightness					M		
• Refer to manufacturer's literature for trouble-shooting procedures							M
LUBRICATION							
• Lubricate thrust ball bearings			M				
• Lubricate electric motor in accordance with manufacturer recommendation. Do not over grease							E

FILTER BUILDING NO. 1 AND NITRIFIED EFFLUENT CONDUIT (015)
OVERHEAD CRANE AND MONORAIL HOISTS
015-009-01-0000 THROUGH 015-009-03-0000

MAINTENANCE TASK	FREQUENCY						
	D	W	M	Q	SA	A	O
HOISTING EQUIPMENT - GENERAL							
• Check all functional operating mechanism for any maladjustments that may interfere with proper operation			M				
• Check that warning labels, push buttons markings or capacity markings have not been removed or are illegible					M		
• Check bolts, nuts and rivets for tightness					M		
• Check brake system for excessive wear and drift					M		
• For detailed maintenance procedures, refer to manufacturer's literature							M
HOOKS							
• Check for deformation and chemical damage			M				
• Check throat opening; replace if bent from normal opening			M				
• Check for twist of hook eye or hook; replace if twisted			M				
• Check if hook eye or hook is bent; replace if bent			M				
• Check for hinge action wear at point of contact and elongation of hook eye			M				
LOAD BEARING CABLE							
• Check load bearing cable for wear, distortion, kinks, stands breaks, improper dead ending, replace cable if conditions described above are excessive			M				
LUBRICATION							
• Check gear oil, maintain level at oil bath			M				
• Lubricate bearings through a grease fitting					M		
• Lubricate shafts					M		

FILTER BUILDING NO. 1 AND NITRIFIED EFFLUENT CONDUIT (015)
SLUICE GATES
015-012-01-0000 AND 015-012-02-0000

MAINTENANCE TASK	FREQUENCY						
	D	W	M	Q	SA	A	O
SLUICE GATE							
• Clean stem			O				
NOTE The frequency for cleaning the sluice gate stem applies to new equipment. The actual required cleaning frequency will be determined based on use of equipment.							
• Clean gate guide groove and stem guide of any foreign matter							O
• Check gate guide groove and stem guide for proper alignment and bolts for tightness						M	
• Check wedge attaching studs and locknuts for proper tightness. Adjust if required						M	
ELECTRIC OPERATOR							
• Clean geared limit and torque switch contact. Use mineral spirits on lint-free cloth					E		
• Check limit switch gear box for damage; replace if necessary					E		
• Check wiring and push button contacts					E		
• Refer to manufacturer's literature for trouble-shooting procedures							E
LUBRICATION							
• Lubricate drive sleeve top bearing			M				
• Lubricated threaded portion of stem			M				
• Check condition of lubricant					M		
BATTERY							
• Clean the battery from dust, dirt and deposits				E			
NOTE Never use solvents, such as gasoline or kerosene, or cleaning compounds of any kind. Use only water.							

FILTER BUILDING NO. 1 AND NITRIFIED EFFLUENT CONDUIT (015)
SLUICE GATES
015-012-01-0000 AND 015-012-02-0000 (cont.)

MAINTENANCE TASK	FREQUENCY						
	D	W	M	Q	SA	A	O
BATTERY (cont.)							
• Maintain the electrolyte level above the plate tops by adding distilled or de-ionized water. Do not overfill							E
NOTE The actual frequency will be established during the first year's service by regular observations.							
• Check charging voltage and current output of the charger. Adjust when necessary to maintain the battery at the prescribed voltage						E	
• Refer to manufacturer's literature for trouble-shooting procedures in case of malfunction of charger							E

FILTER BUILDING NO. 1 AND NITRIFIED EFFLUENT CONDUIT (015)
RATE CONTROLLERS
015-014-01-0000 AND 015-014-02-0000

MAINTENANCE TASK	FREQUENCY						
	D	W	M	Q	SA	A	O
ELECTRONIC CONTROL MODULE							
• Check dead band adjustment. Refer to manufacturer's literature for procedure							I
• For detailed maintenance procedures of instrumentation equipment refer to manufacturer's literature							I
TRANSMITTER							
• Check the zero ant test head signals					I		
• Check calibration and operation as recommended by manufacturer					I		
ELECTRIC VALVE OPERATOR							
• Check actuator for proper function					E		
• Inspect motor brushes. Replace if the brush length is less than 3/8-inch						E	
• Inspect change gears					E		
• Refer to manufacturer's literature for trouble-shooting procedures							E
• LUBRICATION							
• Grease the gear teeth of valve operator					E		
• Brush grease onto the lead screw					E		

FILTER BUILDING NO. 1 AND NITRIFIED EFFLUENT CONDUIT (015)
BACKWASH AIR BLOWERS
015-018-01-0000 AND 015-018-02-0000

MAINTENANCE TASK	FREQUENCY						
	D	W	M	Q	SA	A	O
AIR BLOWER							
• Check for unusual noise and excessive vibration; refer to manufacturer's literature for possible cause and corrective action	O						
• Check bearing temperature; bearing temperature should be less than 190 degrees F	O	M					
NOTE Operators are required to manually check the temperature of bearings daily. Mechanical Maintenance personnel are required to check the temperature of bearings with a temperature sensing device, as recommended by manufacturer weekly.							
• Check coupling for alignment and wear. Replace if necessary					M		
• Refer to manufacturer's literature for trouble-shooting procedures							M
MOTOR							
• Check operating temperature of motor bearings, bearing temperature should be less than 200 degrees F	O	M					
NOTES Operators are required to manually check the temperature of motor bearings daily. Mechanical Maintenance personnel are required to check the temperature of motor bearing with a temperature sensing device, as recommended by the motor manufacturer weekly.							
• Check alignment of motor and driven shaft					M		
• Test insulation resistance of motor winding. Refer to manufacturer's literature for instructions						E	
• Inspect for cleanliness, moisture, overloading and excessive vibration							

FILTER BUILDING NO. 1 AND NITRIFIED EFFLUENT CONDUIT (015)
BACKWASH AIR BLOWERS
015-018-01-0000 AND 015-018-02-0000 (cont.)

MAINTENANCE TASK	FREQUENCY						
	D	W	M	Q	SA	A	O
MOTOR (cont.)							
• Refer to manufacturer's literature for trouble-shooting procedures							
LUBRICATION							
• Check oil level; keep filled to sight glass level; do not overfill		O					
• Drain and replace the bearing oil					M		
• Lubricate coupling in accordance with the manufacturer's instructions					M		
• Lubricate motor bearings; in accordance with the manufacturer's recommendation. Do not over grease					E		

FILTER BUILDING NO. 1 AND NITRIFIED EFFLUENT CONDUIT (015)
LIQUID ALUM CIRCULATING PUMPS
015-024-01-0000 AND 015-024-02-0000

MAINTENANCE TASK	FREQUENCY						
	D	W	M	Q	SA	A	O
LIQUID ALUM CIRCULATING PUMP							
• Check for unusual noise and excessive vibration	O						
• Check alignment of coupling. Adjust if required				M			
• Check operating temperature of motor bearing; bearing temperature should not be above 200 degrees f	O	M					
NOTES Operators are required to manually check the temperature of motor bearings daily. Mechanical Maintenance Personnel are required to check the temperature of motor bearings with a temperature sensing device, as recommended by the motor manufacturer weekly.							
• Check all bolts for proper torque				M			
• Check mechanical seal. Replace if necessary						M	
• Inspect impeller for evidence of chemical attack and for proper clearance. Refer to manufacturer's literature for procedure of impeller clearance setting						M	
• Check shaft and shaft sleeve for surface defect. Remove minor imperfection with emery paper						M	
• Refer to manufacturer's literature for trouble-shooting procedures							M
LUBRICATION							
• Check oil level in reservoir; the correct oil level is at the center of sight oil gauge. Keep oiler bottle filled	O						
• Drain oil through drain plug. Replenish					M		
• Lubricate motor bearings in accordance with manufacturer recommendation. Do not over grease					M		

FILTER BUILDING NO. 1 AND NITRIFIED EFFLUENT CONDUIT (015)
SAMPLE PUMPS
015-032-01-0000 THROUGH 015-032-03-0000

MAINTENANCE TASK	FREQUENCY						
	D	W	M	Q	SA	A	O
SAMPLE PUMP							
• Perform overall visual inspection						M	
• Check guide vane seal ring; replace if necessary						M	
NOTE							
Do not start unit until pump is filled with water.							
• Refer to manufacturer's literature for trouble-shooting procedures							M
LUBRICATION							
• Lubricate motor; refer to manufacturer's instruction			E				

FILTER BUILDING NO. 1 AND NITRIFIED EFFLUENT CONDUIT (015)
DENITRIFICATION FILTER INFLUENT WATER
015-036-01-0000

MAINTENANCE TASK	FREQUENCY						
	D	W	M	Q	SA	A	O
METER							
• Check for leaks on all connections	O						
• Check the pump output pressure. Adjust if necessary					I		
NOTE Pump output pressure should be 10-15 psi higher that the maximum line pressure.							
• Check the pressure sensor balance and operation as recommended by manufacturer					I		
• Clean the pressure sensor orifices and nozzles with the cleaning pins or by flushing if required					I		
• Check the output at zero flow as recommended by manufacturer					I		
• Refer to manufacturer's literature for trouble-shooting procedures							I
• For detailed maintenance procedures of instrumentation equipment refer to manufacturer's literature							I
TRANSMITTER							
• Check for leak of mercury on all connections	O						
• Check calibration and operation as recommended by manufacturer					I		
• Check zero adjustment					I		
LUBRICATION							
• Check the oil level in the pump reservoir and refill if required			O				
• Lubricate motor through the two rubber hoods. Use only a few drops of machine oil					E		

FILTER BUILDING NO. 1 AND NITRIFIED EFFLUENT CONDUIT (015)
GENERAL PURPOSE WATER METER
015-036-02-0000

MAINTENANCE TASK	FREQUENCY						
	D	W	M	Q	SA	A	O
METER							
• Check the zero and test head signals of transmitter					I		
• Check calibration and operation of transmitter as recommended by manufacturer					I		
• For detailed maintenance procedures of instrumentation equipment refer to manufacturer's literature							I

FILTER BUILDING NO. 1 AND NITRIFIED EFFLUENT CONDUIT (015)
MAGNETIC GENERAL PURPOSE EFFLUENT WATER FLOWMETER
015-036-06-0000

MAINTENANCE TASK	FREQUENCY						
	D	W	M	Q	SA	A	O
MAGNETIC METER							
• Check for proper operation of metering system. Perform static test of line power, reference and control signal, current output, magnetic drive and coils, ultrasonic generator and metering electrodes					I		
• Replace metering tube if meter electrode assemblies are corroded or shorted and liner is worn; after reinstallation perform alignment procedure							I
• Perform dynamic performance check to verify accuracy and proper performance of electronic circuitry of flow converter. If accuracy is not within specified tolerance recalibrate converter					I		
• For detailed checking and replacement procedures of metering system refer to manufacturer's literature							I
• Refer to manufacturer's literature for trouble-shooting procedures							I

FILTER BUILDING NO. 1 AND NITRIFIED EFFLUENT CONDUIT (015)
LIQUID ALUM CIRCULATING METER
015-036-03-0000

MAINTENANCE TASK	FREQUENCY						
	D	W	M	Q	SA	A	O
LIQUID ALUM CIRCULATING METER							
• Check for proper operation of metering system. Perform static test of line power, reference and control signal, current output, magnetic drive and coils, ultrasonic generator and metering electrodes.					I		
• Replace metering tube if meter electrode assemblies are corroded or shorted and liner is worn; after reinstallation perform alignment procedure							I
• Perform dynamic performance check to verify accuracy and proper performance of electronic circuitry of flow converter. If accuracy is not within specified tolerance recalibrate converter					I		
• For detailed checking and replacement procedures of metering system refer to manufacturer's literature							I
• Refer to manufacturer's literature for trouble-shooting procedures							I

FILTER BUILDING NO. 1 AND NITRIFIED EFFLUENT CONDUIT (015)
SEWAGE SAMPLER STATION
015-042-01-0000 AND 015-042-02-0000

MAINTENANCE TASK	FREQUENCY						
	D	W	M	Q	SA	A	O
SEWAGE SAMPLER STATION							
• Wipe down interior and exterior of the refrigerator when the sample container are removed	O						
• Check visually air pressure and adequate reservoir flow	O						
• Check visually one or two sampling cycles for proper operation of the sampler	O						
• Check visually oil level and air filter lubricator		O					
• Clean sample funnel, tube and sample cup		O					
• Clean reservoir		O					
• Defrost refrigerator and check operating temperature			O				
• Remove and empty lubricator, clean glass and refill with oil to the proper level			O				
• Clean filter bowl. Use drain valve		O					
• Clean filter parts with methanol			O				
NOTE Never use carbon tetrachloride, trichlorethylene, thinner, acetone or similar solvents.							
• Check diaphragm; replace if swollen or stiff					M		
• Check disc assembly; replace if it is worn or knicked					M		
• Check operating speeds of sampling arms. Adjust if necessary			O				
• Check solenoid valve					M		

FILTER BUILDING NO. 1 AND NITRIFIED EFFLUENT CONDUIT (015)
SUPPLY AND RETURN FANS
015-048-01-0000, 015-048-02-0000, AND 015-049-01-0000

MAINTENANCE TASK	FREQUENCY						
	D	W	M	Q	SA	A	O
SUPPLY AND RETURN FANS							
• Check for unusual noise and excessive vibration. if noises develop, check the fan for worn bearings, proper installation and anchoring and for adequate clearance of rotating members							M
• Check condition of V- belt; replace if necessary						M	
• Check V-belt tension. If adjustment is made, check pulley alignment						M	
LUBRICATION							
• Lubricate fan bearings. Admit grease slowly until it shows up at seals. Do not over lubricate						M	
NOTE Use low pressure grease gun only.							
• Lubricate motor bearings according to the manufacturer's recommendation. Do not over lubricate							E

FILTER BUILDING NO. 1 AND NITRIFIED EFFLUENT CONDUIT (015)
ROOF EXHAUST FANS
015-050-01-0000 AND 015-050-02-0000

MAINTENANCE TASK	FREQUENCY						
	D	W	M	Q	SA	A	O
ROOF EXHAUST FAN							
• Inspect fan wheels, shafts, housing scroll and side liners for corrosion or abrasive wear. Replace if necessary					M		
• Check all bolts and all connections for tightness					M		
• Clean housing, wheels, louvers, from dust and dirt					M		
• Clean dampers and check for freedom of movement, corrosion and erosion					M		
• Check alignment of all parts					M		
• Inspect wiring for deterioration					E		
LUBRICATION							
• Lubricate motor bearings according to the manufacturer's recommendations. Do not over lubricate					E		
• Lubricate fan bearings					M		

FILTER BUILDING NO. 1 AND NITRIFIED EFFLUENT CONDUIT (015)
AIR CONDITIONING UNIT
015-051-01-0000

MAINTENANCE TASK	FREQUENCY						
	D	W	M	Q	SA	A	O
AIR CONDITIONING UNIT							
• Inspect unit coils. Clean if necessary					M		
• Inspect unit casing and accessories for paint chipping or corrosion. If damage is found, clean and repaint						M	
• Clean fan wheels and fan shaft. If rust is found on the fan shaft, remove with emery cloth and recoat						M	
• Check fan belt tension. Adjust if necessary					M		
• Inspect fan belt. Replace if broken or frayed					M		
• Check alignment of fan and motor sheaves. Adjust if necessary					M		
• Check damper linkage, setscrews and blades adjustment for proper operation						M	
• Check drain line for sludge or other foreign material						M	
• If noises develop, check all bearings races and locking devices for tightness, check the fan for worn bearings, and for adequate clearance of rotating member					M		
• Check all electrical terminals for tightness and electrical wires for damage						E	
• Check for proper operation of controller temperature sensor and damper control							M
LUBRICATION							
• Lubricate electric motor in accordance with manufacturer's instruction							E
• Lubricate fan bearings. Do not over grease					M		

FILTER BUILDING NO. 1 AND NITRIFIED EFFLUENT CONDUIT (015)
ELECTRIC REHEAT COIL
015-054-01-0000 AND 015-054-02-0000

MAINTENANCE TASK	FREQUENCY						
	D	W	M	Q	SA	A	O
ELECTRIC REHEAT COIL							
• Check heater element for dirt and foreign matter. Clean					M		
• Inspect all connections for tightness					E		
• Check wire and cable insulation for deterioration						E	

FILTER BUILDING NO. 1 AND NITRIFIED EFFLUENT CONDUIT (015)
EXHAUST FAN
015-056-01-0000

MAINTENANCE TASK	FREQUENCY						
	D	W	M	Q	SA	A	O
EXHAUST FAN							
• Check for unusual noise and excessive vibration. If noises develop, check the fan for worn bearings, proper installation and anchoring and for adequate clearance of rotating members							M
• Check condition of V-belt; replace if necessary					M		
• Check V-belt tension. If adjustment is made, check pulley alignment					M		
LUBRICATION							
• Lubricate fan bearings. Admit grease slowly until it shows up at seals . Do not over lubricate					M		
NOTE Use low pressure grease gun only.							
• Lubricate motor bearings according to the manufacturer's recommendation. Do not over lubricate							E

FILTER BUILDING NO. 1 AND NITRIFIED EFFLUENT CONDUIT (015)
AUTOMATIC ROLL FILTER
015-057-01-0000

MAINTENANCE TASK	FREQUENCY						
	D	W	M	Q	SA	A	O
ROLL FILTER							
• Clean dust and dirt accumulation				M			
• Change filter media, when pressure drop across the filter reaches the maximum recommended by the manufacturer. Refer to manufacturer's literature for procedure of reloading the media							M
• Check pressure control for proper operation. Adjust zero setting of the pointer if required				I			

FILTER BUILDING NO. 1 AND NITRIFIED EFFLUENT CONDUIT (015)
COMPRESSOR CONDENSOR
015-063-01-0000

MAINTENANCE TASK	FREQUENCY						
	D	W	M	Q	SA	A	O
COMPRESSOR CONDENSOR							
• Inspect unit casing and accessories for paint chipping or corrosion. If damage is found, clean and repaint						M	
• Check belt tension. Adjust if necessary				M			
• Inspect belt. Replace if broken or frayed				M			
• Clean CONDENSOR coil with compressed air, vacuum cleaner or soft bristle brush				M			
• Clean fan wheels and shaft. If rust is found on the fan shaft, remove with emery cloth and recoat						M	
• If noises develop, check fan bearings, races and locking devices for tightness, check the fan for worn bearings and for adequate clearance of rotating members							M
• Check all electrical terminals for tightness and electrical wires for damage						E	
• Check condensate drain line for sludge or other foreign material				O			
• Check system for proper operation. Refer to manufacturer's literature for instruction							M
• Refer to manufacturer's literature for trouble-shooting procedures							M
LUBRICATION							
• Lubricate electric motor in accordance with manufacturer's instruction							E
• Lubricate fan bearings. Do not over grease					M		
• Check compressor oil system for proper operation	O						

FILTER BUILDING NO. 1 AND NITRIFIED EFFLUENT CONDUIT (015)
EFFLUENT WATER STRAINERS
015-060-01-0000 AND 015-060-02-0000

MAINTENANCE TASK	FREQUENCY						
	D	W	M	Q	SA	A	O
WATER STRAINER							
• Inspect straining media. Replace if necessary				M			
• Check proper shoe clearance. Adjust if required. Refer to manufacturer's literature for procedure				M			
• Make adjustment of strainer cone if motor becomes overloaded							M
• Remove heavy solids through drain plug			O				
• Check packing for wear. Replace if necessary with the size originally supplied						M	
LUBRICATION							
• Check oil level in gear case; keep filled to right glass level; do not overfill			O				
• Drain flush and refill gear case						M	
• Grease shaft bearings, reducer bearings and packing lantern			M				
• Lubricate motor in accordance with manufacturer's instruction			E				

FILTER BUILDING NO. 1 AND NITRIFIED EFFLUENT CONDUIT (015)
STRAINER BACKWASH WATER PUMPS
015-061-01-0000 and 015-061-02-0000

MAINTENANCE TASK	FREQUENCY						
	D	W	M	Q	SA	A	O
STRAINER BACKWASH WATER PUMP							
• Check pump alignment					M		
• Inspect case wear ring and rotating elements for excessive wear. Replace if necessary. Refer to manufacturer's literature for procedure					M		
• Inspect mechanical seal for wear. Replace if necessary. Refer to manufacturer's literature for procedure					M		
• Refer to manufacturer's literature for trouble-shooting procedures							M
• Check grease fitting and drain plug for leaks					M		
LUBRICATION							
• Lubricate motor in accordance with manufacturer recommendation					E		

FILTER BUILDING NO. 1 AND NITRIFIED EFFLUENT CONDUIT (015)
BACKWASH WATER PUMPS
015-062-01-0000 THROUGH 015-062-03-0000

MAINTENANCE TASK	FREQUENCY						
	D	W	M	Q	SA	A	O
BACKWASH WATER PUMP							
• Check for unusual noise and excessive vibration	O						
• Check bearing temperature; bearing temperature should not be 120 degrees F above the surrounding temperature	O	M					
NOTES Operators are required to manually check the temperature of bearings daily Mechanical Maintenance Personnel are required to check the temperature of bearings with a temperature sensing device, as recommended by the manufacturer weekly.							
• Check mechanical seal for leakage	O						
• Replace mechanical seal if required. Refer to manufacturer's literature for procedure							M
• Clean bearing housing and bearings. Use kerosene or mineral spirits. Repack with clean ball bearing grease. Check that water slingers are in correct places						M	
• Check for misalignment of coupling and shaft						M	
• Check shaft and shaft sleeve for scoring						M	
• Check coupling for wear						M	
• Refer to manufacturer's literature for trouble-shooting procedures							M
MOTOR							
• Check for unusual noise, excessive vibration and any other abnormal conditions	O						
• Check operating temperature of motor bearings; bearing temperature should not be 120 degrees F above the surrounding temperature	O	M					

FILTER BUILDING NO. 1 AND NITRIFIED EFFLUENT CONDUIT (015)
BACKWASH WATER PUMPS
015-062-01-0000 THROUGH 015-062-03-0000 (cont.)

MAINTENANCE TASK	FREQUENCY						
	D	W	M	Q	SA	A	O
MOTOR (cont.)							
NOTES							
Operators are required to manually check the temperature of motor bearings daily.							
Mechanical Maintenance Personnel are required to check the temperature of motor bearings with a temperature sensing device, as recommended by the motor manufacturer weekly.							
• Check terminal connections, assembly screws, bolts and nuts for tightness						E	
• Examine starter, switch, fuses and other control		E					
• Test insulation resistance of motor winding. Refer to manufacturer's literature for instruction						E	
• Clean the motor inside and outside. Use dry compressed air for dust and dry dirt and mineral spirits for accumulated sticky dirt and grease		M					
NOTE							
Do not use gasoline or other inflammable solvents.							
LUBRICATION							
• Lubricate pump bearings with ball-bearing grease. Do not over grease				M			
• Lubricate bearings of coupling through grease fittings in accordance with manufacturer's recommended procedure					E		
• Lubricate motor bearings in accordance with manufacturer recommendation. Do not over grease							E

FILTER BUILDING NO. 1 AND NITRIFIED EFFLUENT CONDUIT (015)
GENERAL PURPOSE EFFLUENT WATER PUMPS
015-062-13-0000, 015-062-05-0000, 015-062-13-0000 AND 015-062-14-0000

MAINTENANCE TASK	FREQUENCY						
	D	W	M	Q	SA	A	O
CENTRIFUGAL EFFLUENT WATER PUMP							
• Check for unusual noise and excessive vibration	O						
• Check bearing temperature; bearing temperature should not be 120 degrees F above the surrounding temperature	O	M					
NOTES Operators are required to manually check the temperature of bearings daily Mechanical Maintenance personnel are required to check the temperature of bearings with a temperature sensing device, as recommended by the manufacturer weekly.							
• Check mechanical seal for leakage	O						
• Replace mechanical seal if required. Refer to manufacturer literature for procedure							M
• Clean bearing housing and bearings. Use kerosene or mineral spirits. Repack with clean ball- bearing grease. Check that water slingers are in correct places						M	
• Check for misalignment of coupling and shaft						M	
• Check shaft and shaft sleeve for scoring						M	
• Check coupling for wear						M	
• Refer to manufacturer's literature for trouble-shooting procedures							M
MOTOR							
• Check for unusual noise, excessive vibration and any other abnormal conditions	O						
• Check operating temperature of motor bearings; bearing temperature should not be 120 degrees F above the surrounding temperature	O	M					

FILTER BUILDING NO. 1 AND NITRIFIED EFFLUENT CONDUIT (015)
GENERAL PURPOSE EFFLUENT WATER PUMPS
015-062-13-0000, 015-062-05-0000, 015-062-13-0000 AND 015-062-14-0000 (cont.)

MAINTENANCE TASK	FREQUENCY						
	D	W	M	Q	SA	A	O
MOTOR (cont.)							
NOTES							
Operators are required to manually check the temperature of motor bearings daily.							
Mechanical Maintenance Personnel are required to check the temperature of motor bearings with a temperature sensing device, as recommended by the motor manufacturer weekly.							
• Check terminal connections, assembly screws, bolts and nuts for tightness						E	
• Examine starter, switch, fuses and other control		E					
• Test insulation resistance of motor winding. Refer to manufacturer's literature for instruction						E	
• Clean the motor inside and outside. Use dry compressed air for dust and dry dirt and mineral spirits for accumulated stickly dirt and grease		M					
NOTE							
Do not use gasoline or other inflammable solvents.							
LUBRICATION							
• Lubricate pump bearings with ball-bearing grease. Do not over grease				M			
• Lubricate bearing of coupling through grease fittings in accordance with manufacturer's recommended procedures					E		
• Lubricate motor bearing is accordance with manufacturer recommendation. Do not over grease							E

FILTER BUILDING NO. 1 AND NITRIFIED EFFLUENT CONDUIT (015)
THICKENING TANKS DILUTION WATER PUMPS
015-062-06-0000 AND 015-062-07-0000

MAINTENANCE TASK	FREQUENCY						
	D	W	M	Q	SA	A	O
THICKENING TANKS DILUTION WATER PUMPS							
• Check for unusual noise and excessive vibration	O						
• Check bearing temperature; bearing temperature should not be 120 degrees F above the surrounding temperature	O	M					
NOTES Operators are required to manually check the temperature of bearings daily. Mechanical Maintenance Personnel are required to check the temperature of bearings with a temperature sensing device, as recommended by the manufacturer weekly.							
• Check mechanical seal for leakage	O						
• Replace mechanical seal if required. Refer to manufacturer literature for procedure							M
• Clean bearing housing and bearing. Use kerosene or mineral spirits. Repack with clean ball-bearing grease. Check that water slingers are in correct places						M	
• Check for misalignment of coupling and shaft						M	
• Check shaft and shaft sleeve for scoring						M	
• Check coupling for wear						M	
• Refer to manufacturer's literature for trouble shooting procedures							M
MOTOR							
• Check for unusual noise, excessive vibration and any other abnormal conditions	O						
• Check operating temperature of motor bearings; bearing temperature should not be 120 degrees F above the surrounding temperature	O	M					

FILTER BUILDING NO. 1 AND NITRIFIED EFFLUENT CONDUIT (015)
THICKENING TANKS DILUTION WATER PUMPS
015-062-06-0000 AND 015-062-07-0000 (cont.)

MAINTENANCE TASK	FREQUENCY						
	D	W	M	Q	SA	A	O
MOTOR (cont.)							
NOTES							
Operators are required to manually check the temperature of motor bearings daily.							
Mechanical Maintenance Personnel are required to check the temperature of motor bearing with a temperature sensing device, as recommended by the motor manufacturer weekly.							
• Check terminal connections, assembly screws, bolts and nuts for tightness						E	
• Examine starter, switch, fuses and other control		E					
• Test insulation resistance of motor winding. Refer to manufacturer's literature for instruction						E	
• Clean the motor inside and outside. Use dry compressed air for dust and dry dirt and mineral spirits for accumulated sticky dirt and grease		M					
NOTE							
Do not use gasoline or other inflammable solvents.							
LUBRICATION							
• Lubricate pump bearing with ball-bearing grease. Do not over grease				M			
• Lubricate bearings of coupling through grease fittings in accordance with manufacturer's recommended procedure					E		
• Lubricate motor bearings in accordance with manufacturer recommendation. Do not over grease							E

FILTER BUILDING NO. 1 AND NITRIFIED EFFLUENT CONDUIT (015)
CHLORINE SOLUTION WATER PUMPS
015-062-08-0000 AND 015-062-09-0000

MAINTENANCE TASK	FREQUENCY						
	D	W	M	Q	SA	A	O
CHLORINE SOLUTION WATER PUMPS							
• Check for unusual noise and excessive vibration	O						
• Check bearing temperature; bearing temperature should not be 120 degrees F above the surrounding temperature.	O	M					
NOTES Operators are required to manually check the temperature of bearings daily. Mechanical Maintenance Personnel are required to check the temperature of bearings with a temperature sensing device, as recommended by the manufacturer weekly.							
• Check mechanical seal for leakage	O						
• Replace mechanical seal if required. Refer to manufacturer literature for procedure							M
• Clean bearing housing and bearings. Use kerosene or mineral spirits. Repack with clean ball-bearing grease. Check water slingers are in correct places						M	
• Check for misalignment of coupling and shaft						M	
• Check shaft and shaft sleeve for scoring						M	
• Check coupling for wear						M	
• Refer to manufacturer's literature for trouble-shooting procedures							M
MOTOR							
• Check for unusual noise, excessive vibration and any other abnormal conditions	O						
• Check operating temperature of motor bearings; bearing temperature should not be 120 degrees F above the surrounding temperature	O	M					

FILTER BUILDING NO. 1 AND NITRIFIED EFFLUENT CONDUIT (015)
CHLORINE SOLUTION WATER PUMPS
015-062-08-0000 AND 015-062-09-0000 (cont.)

MAINTENANCE TASK	FREQUENCY						
	D	W	M	Q	SA	A	O
MOTOR (cont.)							
NOTES							
Operators are required to manually check the temperature of motor bearings daily							
Mechanical Maintenance Personnel are required to check the temperature of motor bearings with a temperature sensing device, as recommended by the motor manufacturer weekly.							
• Check terminal connections, assembly screws, bolts and nuts for tightness						E	
• Examine starter, switch, fuses and other control		E					
• Test insulation resistance of motor winding. Refer to manufacturer's literature for instruction						E	
• Clean the motor inside and outside. Use dry compressed air for dust and dry dirt and mineral spirits for accumulated sticky dirt and grease		M					
NOTE							
Do not use gasoline or other inflammable solvents.							
• Check the drive belts for excessive wear; replace if necessary					M		
NOTE							
Always replace entire set of belts							
• Check drive for belt misalignment and proper belt tension					M		
• Check parts of motion control variable speed sheave for wear and damage; replace if necessary			E				
• Clean flanges, motion sleeve and oil reservoir of drive unit. Use a solvent soaked rag; wipe dry immediately							

FILTER BUILDING NO. 1 AND NITRIFIED EFFLUENT CONDUIT (015)
CHLORINE SOLUTION WATER PUMP
015-062-012-0000 (cont.)

MAINTENANCE TASK	FREQUENCY						
	D	W	M	Q	SA	A	O
MOTOR (cont.)							
• Clean motor inside and outside. Use dry compressed air for dust and dry dirt and mineral spirits for accumulated sticky dirt or grease		M					
NOTE Do not use gasoline or other inflammable solvents.							
LUBRICATION							
• Lubricate bearings when shaft/bearing assembly is removed from the pump							E
• Lubricate gear joints when gear joints are disassembled							E
• Lubricate motor bearings in accordance with manufacturer's recommendations. Do not over grease							E

FILTER BUILDING NO. 1 AND NITRIFIED EFFLUENT CONDUIT (015)
SULFUR DIOXIDE SOLUTION WATER PUMPS
015-062-15-0000 AND 015-062-16-0000

MAINTENANCE TASK	FREQUENCY						
	D	W	M	Q	SA	A	O
SULFUR DIOXIDE SOLUTION WATER PUMPS							
• Check for unusual noise and excessive vibration	O						
• Check bearing temperature; bearing temperature should not be 120 degrees F above the surrounding temperature.	O	M					
NOTES Operators are required to manually check the temperature of bearings daily. Mechanical Maintenance Personnel are required to check the temperature of bearings with a temperature sensing device, as recommended by the manufacturer weekly.							
• Check mechanical seal for leakage	O						
• Replace mechanical seal if required. Refer to manufacturer literature for procedure							M
• Clean bearing housing and bearings. Use kerosene or mineral spirits. Repack with clean ball-bearing grease. Check water slingers are in correct places						M	
• Check for misalignment of coupling and shaft						M	
• Check shaft and shaft sleeve for scoring						M	
• Check coupling for wear						M	
• Refer to manufacturer's literature for trouble-shooting procedures							M
MOTOR							
• Check for unusual noise, excessive vibration and any other abnormal conditions	O						
• Check operating temperature of motor bearings; bearing temperature should not be 120 degrees F above the surrounding temperature	O	M					

FILTER BUILDING NO. 1 AND NITRIFIED EFFLUENT CONDUIT (015)
SULFUR DIOXIDE SOLUTION WATER PUMPS
015-062-15-0000 AND 015-062-16-0000 (cont.)

MAINTENANCE TASK	FREQUENCY						
	D	W	M	Q	SA	A	O
MOTOR (cont.)							
NOTES							
Operators are required to manually check the temperature of motor bearings daily							
Mechanical Maintenance Personnel are required to check the temperature of motor bearings with a temperature sensing device, as recommended by the motor manufacturer weekly.							
• Check terminal connections, assembly screws, bolts and nuts for tightness						E	
• Examine starter, switch, fuses and other control		E					
• Test insulation resistance of motor winding. Refer to manufacturer's literature for instruction						E	
• Clean motor inside and outside. Use dry compressed air for dust and dry dirt and mineral spirits for accumulated sticky dirt or grease		M					
NOTE							
Do not use gasoline or other inflammable solvents.							
LUBRICATION							
• Lubricate pump bearings with manufacturer's recommended grease. Do not over-grease				M			
• Lubricate bearings of coupling through grease fittings in accordance with manufacturer's recommended procedure					E		
• Lubricate motor bearings in accordance with manufacturer recommendation. Do not over-grease					E		

FILTER BUILDING NO. 1 AND NITRIFIED EFFLUENT CONDUIT (015)
LAWN IRRIGATION WATER PUMPS
015-062-10-0000 AND 015-062-11-0000

MAINTENANCE TASK	FREQUENCY						
	D	W	M	Q	SA	A	O
LAWN IRRIGATION WATER PUMPS							
• Check for unusual noise and excessive vibration	O						
• Check bearing temperature; bearing temperature should not be 120 degrees F above the surrounding temperature	O	M					
NOTES Operator are required to manually check the temperature of bearings daily. Mechanical Maintenance Personnel are required to check the temperature of bearings with a temperature sensing device, as recommended by the manufacturer weekly.							
• Check mechanical seal for leakage	O						
• Replace mechanical seal if required. Refer to manufacturer literature for procedure							M
• Clean bearing housing and bearings. Use kerosene or mineral spirits. Repack with clean ball-bearing grease. Check that water slingers are in correct places						M	
• Check for misalignment of coupling and shaft						M	
• Check shaft and shaft sleeve for scoring						M	
• Check coupling for wear						M	
• Refer to manufacturer's literature for trouble-shooting procedures							M
MOTOR							
• Check for unusual noise, excessive vibration and any other abnormal conditions	O						
• Check operating temperature of motor bearings; bearing temperature should not be 120 degrees F above the surrounding temperature	O	M					

FILTER BUILDING NO. 1 AND NITRIFIED EFFLUENT CONDUIT (015)
LAWN IRRIGATION WATER PUMPS
015-062-10-0000 AND 015-062-11-0000 (cont.)

MAINTENANCE TASK	FREQUENCY						
	D	W	M	Q	SA	A	O
MOTOR (cont.)							
NOTES							
Operators are required to manually check the temperature of motor bearings daily.							
Mechanical Maintenance Personnel are required to check the temperature of motor bearings with a temperature sensing device, as recommended by the motor manufacturer weekly.							
• Check terminal connections, assembly screws, bolts and nuts for tightness						E	
• Examine starter, switch, fuses and other control		E					
• Test insulation resistance of motor winding. Refer to manufacturer's literature for instruction						E	
• Clean the motor inside and outside. Use dry compressed air for dust and dry dirt and mineral spirits for accumulated sticky dirt and grease		M					
NOTE							
Do not use gasoline or other inflammable solvents.							
LUBRICATION							
• Lubricate pump bearings with ball-bearing grease. Do not over-grease				M			
• Lubricate bearings of coupling through grease fittings in accordance with manufacturer's recommended procedure					E		
• Lubricate motor bearings in accordance with manufacturer recommendation. Do not over grease							E

FILTER BUILDING NO. 1 AND NITRIFIED EFFLUENT CONDUIT (015)
POLYMER TANK MIXER
015-028-01-0000 AND 015-028-02-0000

MAINTENANCE TASK	FREQUENCY						
	D	W	M	Q	SA	A	O
POLYMER TANK MIXER							
• Check for unusual noise and excessive vibration	O						
• Check for overheating. Operating unit temperature should not exceed 180 degrees F	O						
• Check for oil leakage	O						
• Clean and flush breather elements			M				
• Check gap, angular and offset alignment of coupling					M		
• Check for worn bearings, seals, O-rings. Replace if necessary in accordance with manufacturer's recommended procedures							M
• Refer to manufacturer's literature for trouble shooting procedures							M
LUBRICATION							
• Lubricate oil seals			M				
• Check oil level in unit. Add oil if necessary. Do not overfill		M					
• Add grease to all grease fittings			M				
• Examine lube oil for contamination. If contaminated, drain and refill lubricating system			M				
• Change lubricant					M		
• Lubricate coupling. Use standard grease gun; fill with grease until an excess appears at the opening on the other side					M		
• Lubricate bearings of motor in accordance with manufacturer's recommended procedure. Do not over lubricate					E		

FILTER BUILDING NO. 1 AND NITRIFIED EFFLUENT CONDUIT (015)
POLYMER ACTIVATION UNITS
015-066-01-0000 AND 015-066-02-0000

MAINTENANCE TASK	FREQUENCY						
	D	W	M	Q	SA	A	O
POLYMER ACTIVATION UNIT							
• Check sensitivity of probes		O					
• Check for broken or rupture wires to level probes				M			
• Clean solenoid valve				M			
• Check seating and operation of solenoid valve. Replace worn or damage parts				M			
• Check alignment of pumps and drives					M		
• Inspect and reset heaters in motor starter of booster pump					M		
• Clean activator pump				M			
NOTE Wipe pump parts with clean cloth dipped in a suitable solvent or boil in caustic solution.							
• Check for worn stator of polymer pump					M		
• Check packing of polymer pump for tightness and wear. Replace if necessary			M				
• Check shaft of polymer pump for scoring. If shaft is scored as much as 1/64 inch deep it should be removed and polished before renewing packing				M			
• Inspect contacts of full voltage starters. Replace if severely burned, pitted or worn						E	
• Check for deposition of foreign material on the probe of no flow switch. Clean if necessary					M		
• Test for proper operation of probe of no-flow switch and associated equipment							M
• Refer to manufacturer's literature for trouble-shooting procedures							M

FILTER BUILDING NO. 1 AND NITRIFIED EFFLUENT CONDUIT (015)
POLYMER ACTIVATION UNITS
015-066-01-0000 AND 015-066-02-0000 (cont.)

MAINTENANCE TASK	FREQUENCY						
	D	W	M	Q	SA	A	O
LUBRICATION							
• Check the oil level through the plug in speed reducer. Replenish		E					
• Change the oil in speed reducer housing				E			
• Lubricate bearing of the polymer pump. Do not over grease			M				
• Lubricate packing of polymer pump. Do not over grease			M				
• Change grease in bearing housing of pump. Before re-mounting assembly wash bearing shaft assembly with clean benzine and add a few drops of oil to bearing seals						M	
• Lubricate electrical motors in accordance with manufacturer's recommendation							E

FILTER BUILDING NO. 1 AND NITRIFIED EFFLUENT CONDUIT (015)
POLYMER TRANSFER PUMP
015-067-01-0000

MAINTENANCE TASK	FREQUENCY						
	D	W	M	Q	SA	A	O
POLYMER TRANSFER PUMP							
• Clean and inspect all parts of safety relief valve for wear or damage. Repair or replace if necessary					M		
• Clean exterior of pump					O		
• Check for misalignment of coupling and shaft					M		
• Make thrust bearing adjustment if necessary							M
• Check closures, ball bearings, bushings, mechanical seal and all other parts for wear and damage. Replace if necessary							M
LUBRICATION							
• Lubricate motor; refer to manufacturer's instruction			E				
• Lubricate pump with a hand gun at all lubrication fittings provided. Do not over grease				M			

FILTER BUILDING NO. 1 AND NITRIFIED EFFLUENT CONDUIT (015)
POLYMER FEED PUMPS
015-068-01-0000, 015-068-02 AND 015-068-03-0000

MAINTENANCE TASK	FREQUENCY						
	D	W	M	Q	SA	A	O
POLYMER FEED PUMP							
• Check for unusual noise and excessive vibration	O						
• Clean exterior of the pump					O		
• Replace packing when leakage can no longer be regulated by tightening the gland nuts. Refer to manufacturer's literature for procedure.							M
• Clean bearing housing and bearings. Use mineral spirits. Repack with clean ball bearing grease					M		
• Check for misalignment of coupling and shaft						M	
• Check closures, ball bearings, drive shaft, seals, rotor and stator for wear and damage. Replace if necessary							M
• Refer to manufacturer's literature for trouble shooting procedures.							M
MOTOR							
• Check for unusual noise, excessive vibration or any other abnormal conditions	O						
• Check operating temperature of motor bearings; bearing temperature should not be 120 degrees F above the surrounding temperature	O	M					
NOTES						E	
Operators are required to manually check the temperature of motor bearings daily.							
Mechanical Maintenance Personnel are required to check the temperature of motor bearings with a temperature sensing device, as recommended by the motor manufacturer weekly.							
• Check terminal connections, assembly screws, bolts and nuts for tightness		I					
• Examine starter, switch, fuses and other control						E	

FILTER BUILDING NO. 1 AND NITRIFIED EFFLUENT CONDUIT (015)
POLYMER FEED PUMPS
015-068-01-0000, 015-068-02 AND 015-068-03-0000 (cont.)

MAINTENANCE TASK	FREQUENCY						
	D	W	M	Q	SA	A	O
MOTOR (cont.)							
• Test insulation resistance of motor winding. Refer to manufacturer's literature for instructions							
LUBRICATION							
• Lubricate bearings when shaft/bearing assembly is removed from the pump							E
• Lubricate gear joints when gear joints are disassembled							E
• Lubricate motor bearings in accordance with manufacturer's recommendations. Do not over-grease.							E

FILTER BUILDING NO. 1 AND NITRIFIED EFFLUENT CONDUIT (015)
CHLORINE EVAPORATOR
015-069-01-0000 THROUGH 015-069-03-0000

MAINTENANCE TASK	FREQUENCY						
	D	W	M	Q	SA	A	O
CHLORINE EVAPORATOR							
• Check operating temperature. Adjust	O						
• Check water level in water chamber through sight glass of water level gauge	O						
• Check for leaks at all joints in liquid chemical supply and gas discharge lines. Repair if necessary and perform pressure testing							I
• Check evaporator performance. Evaporator is operating satisfactory if minimum superheat requirement is 20 degrees F. Refer to manufacturer's literature for setting procedure		O					
• Clean vaporizing chamber from accumulated deposit. Use steam						I	
• Inspect all surfaces of vaporizing chamber and heating elements for sign of corrosion. Replace any worn or damaged part of evaporator						I	
• Refer to manufacturer's literature for trouble-shooting procedures							I

FILTER BUILDING NO. 1 AND NITRIFIED EFFLUENT CONDUIT (015)
CHLORINATOR
015-070-01-0000 THROUGH 015-070-03-0000

MAINTENANCE TASK	FREQUENCY						
	D	W	M	Q	SA	A	O
CHLORINATOR							
• Check heater for proper function	O						
• Inspect plug and seat surfaces of vacuum regulator for scratches or roughness. Replace if defective						I	
• Inspect all O-rings for brittleness, cuts or abrasion when cleaning parts. Replace if necessary						I	
• Inspect in the vacuum stabilizing and relief valve diaphragm for cracks or weakness and inspect valve seat and plug for roughness or damage. Replace if necessary						I	
• Check the alignment of variable orifice			O				
• Clean the gas filter						I	
• Clean valve seat for plug of vacuum regulator						I	
• Clean variable orifice						I	
• Clean flowmeter tube and float						I	
• Clean flowrator valve						I	
• Clean vacuum stabilizing and vacuum relief valve						I	
• Clean the drain relief valve						I	
NOTE For cleaning all parts of chlorinator use wood alcohol to remove any accumulated organic residues and muriatic acid to remove mineral deposits.							
IN-LINE CHLORINE SOLUTION FLOW INDICATOR							
• Clean tube, float and orifices from accumulated deposits. Use a soft cloth, brush or pipe cleaner wetted with alcohol						I	

FILTER BUILDING NO. 1 AND NITRIFIED EFFLUENT CONDUIT (015)
CHLORINATOR
015-070-01-0000 THROUGH 015-070-03-0000 (cont.)

MAINTENANCE TASK	FREQUENCY						
	D	W	M	Q	SA	A	O
IN-LINE CHLORINE SOLUTION FLOW INDICATOR (cont.)							
• Inspect the sharp edge of the orifice for nicks or scratches. Renew if necessary						I	
• Check O-ring seals for mechanical damage or brittleness. Replace if necessary							
LUBRICATION							
• Lubricate O-ring surfaces, when replacing them. Prevent any lubricant from entering the flow passages							I
• Lubricate sparingly the diaphragm on reassembly after inspection or cleaning of chlorinator							I

FILTER BUILDING NO. 1 AND NITRIFIED EFFLUENT CONDUIT (015)
EJECTOR
015-071-01-0000 THROUGH 015-071-03-0000

MAINTENANCE TASK	FREQUENCY						
	D	W	M	Q	SA	A	O
EJECTOR							
• Clean water strainer						I	
• Clean stem, nozzle and throat from accumulated mineral deposits. Use muriatic acid						I	
• Inspect the gaskets for cracks or weak spots. Renew if necessary						I	
• Clean and inspect backflow ball check valve ball and seat. Renew if necessary						I	
• Refer to manufacturer's literature for trouble-shooting procedures							I

FILTER BUILDING NO. 1 AND NITRIFIED EFFLUENT CONDUIT (015)
CHLORINE GAS LEAK DETECTION
015-072-01-0000

MAINTENANCE TASK	FREQUENCY						
	D	W	M	Q	SA	A	O
CHLORINE GAS LEAK DETECTION							
• Check the gas alarm circuit, the operation of the sensing cell, the detection circuit and the instrument fault circuit					E		
• Refer to manufacturer's literature for procedures					I		
• Clean the sealing surfaces from deposits of solid matter					I		
• Check O-ring seals for mechanical damage and brittleness. Replace if necessary					I		
• Check the liquid level in the constant head bottle of the electrolyte reservoir. Refill if necessary; for procedure refer to manufacturer's literature							I
• Clean sensing cell and electrode surfaces							I
• Replace the electrolyte, for procedure refer to manufacturer's literature	O						
• Check the level of the float in the flowmeter. Flow rate of air to the sensing cell should be maintained at 4,250 cc/min					I		
• Clean or replace air filter					I		
• Check the air lines for dirt accumulation. Clean if necessary						I	
• Check the air lines for mechanical damage. replace faulty lines						I	
• Clean out the pump chamber and the rotor slots of the air pump. Use compressed air						I	
• Inspect the air pump chamber. Replace any carbon vanes that shows excessive wear or is cracked or chipped						I	
NOTE							
Never lubricate the air pump							
LUBRICATION							
• Lubricate sparingly O-ring surfaces when replacing them							

FILTER BUILDING NO. 2 (047)
SUMP PUMPS
047-008-01-0000, 047-008-02-0000 AND 047-008-03-0000

MAINTENANCE TASK	FREQUENCY						
	D	W	M	Q	SA	A	0
SUMP PUMP							
• Check for unusual noise and excessive vibration; refer to manufacturer's literature for cause and corrective action	O						
• Test moisture detector for continuity			E				
• Refer to manufacturer's literature for trouble-shooting procedures							M
LUBRICATION							
• Lubricate electric motor in accordance with manufacturer recommendation. Do not over grease							E

FILTER BUILDING NO. 2 (047)
MONORAIL HOISTS
047-009-01-0000 AND 047-009-02-0000

MAINTENANCE TASK	FREQUENCY						
	D	W	M	Q	SA	A	0
HOISTING EQUIPMENT - GENERAL							
• Check all functional operating mechanisms for any maladjustments that may interfere with proper operation			M				
• Check that warning labels, push buttons markings or capacity markings have not been removed or are illegible					M		
• Check bolts, nuts and rivets for tightness					M		
• Check brake system for excessive wear and drift					M		
• For detailed maintenance procedures, refer to manufacturer's literature							M
HOOKS							
• Check for deformation and chemical damage			M				
• Check throat opening; replace if bent from normal opening			M				
• Check for twist of hook eye or hook; replace if twisted			M				
• Check if hook eye or hook is bent; replace if bent			M				
• Check for hinge action wear at point of contact and elongation of hook eye			M				
LOAD BEARING CABLE							
• Check load bearing cable for wear, twist distortion, kinks, strand breaks, improper dead ending, replace cable if conditions described above are excessive							
LUBRICATION							
• Check gear oil, maintain level at oil bath			M				
• Lubricate bearings through a grease fitting					M		
• Lubricate shafts					M		

FILTER BUILDING NO. 2 (047)
SLUICE GATE
047-012-01-0000

MAINTENANCE TASK	FREQUENCY						
	D	W	M	Q	SA	A	0
SLUICE GATE							
• Clean stem			O				
NOTE The frequency for cleaning the sluice gate stem applies to new equipment. The actual required cleaning frequency will be determined based on use of equipment							
• Clean gate guide groove and stem guide of any foreign matter				O			
• Check gate guide groove and stem guide for proper alignment and bolts for tightness						M	
• Check wedge attaching studs and locknuts for proper tightness. Adjust if required						M	
LUBRICATION							
• Lubricate drive sleeve top bearing			M				
• Lubricate threaded portion of stem					M		
• Check condition of lubricant					M		

FILTER BUILDING NO. 2 (047)
BACKWASH AIR BLOWERS
047-018-01-0000 THROUGH 047-018-03-0000

MAINTENANCE TASK	FREQUENCY						
	D	W	M	Q	SA	A	0
AIR BLOWER							
• Check for unusual noise and excessive vibration; refer to manufacturer's literature for possible cause and corrective action	O						
• Check bearing temperature; bearing temperature should be less than 190 degrees F	O	M					
NOTES Operators are required to manually check the temperature of bearings daily. Mechanical Maintenance Personnel are required to check the temperature of bearings with a temperature sensing device as recommended by manufacturer weekly.							
• Check coupling for alignment and wear. Replace if necessary					M		
• Refer to manufacturer's literature for trouble-shooting procedures							M
MOTOR							
• Check operating temperature of motor bearings; bearing temperature should be less than 200 degrees F	O	M					
NOTES Operators are required to manually check the temperature of motor bearings daily Mechanical Maintenance Personnel are required to check the temperature of bearings with temperature sensing device, as recommended by manufacturer weekly.							
• Check alignment of motor and driven shaft					M		
• Test insulation resistance of motor winding. Refer to manufacturer's literature for instructions						E	

FILTER BUILDING NO. 2 (047)
BACKWASH AIR BLOWERS
047-018-01-0000 THROUGH 047-018-03-0000

MAINTENANCE TASK	FREQUENCY						
	D	W	M	Q	SA	A	0
MOTOR (Continued)							
• Inspect for cleanliness, moisture, overloading and excessive vibration				O			
• Refer to manufacturer's literature for trouble-shooting procedures							M
LUBRICATION							
• Check oil level; keep filled to sight glass level; do not overfill		O					
• Drain and replace the bearing oil					M		
• Lubricate coupling in accordance with the manufacturer's instructions					M		
• Lubricate motor bearings; in accordance with manufacturer recommendation. Do not over grease					E		

FILTER BUILDING NO. 2 (047)
SAMPLE PUMPS
047-032-01-0000 AND 047-032-02-0000

MAINTENANCE TASK	FREQUENCY						
	D	W	M	Q	SA	A	0
SAMPLE PUMP							
• Perform overall visual inspection						M	
• Check guide vane seal ring; replace if necessary						M	
NOTE Do not start until pump is filled with water							
• Refer to manufacturer's literature for trouble-shooting procedures							M
LUBRICATION							
• Lubricate motor; refer to manufacturer's instruction			E				

FILTER BUILDING NO. 2 (047)
SUPPLY FANS
047-048-01-0000 THROUGH 047-048-08-0000

MAINTENANCE TASK	FREQUENCY						
	D	W	M	Q	SA	A	0
SUPPLY FANS							
• Check for unusual noise and excessive vibration. If noises develop, check the fan for worn bearings, proper installation and anchoring and for adequate clearance of rotating members							M
• Check condition of V-belt; replace if necessary					M		
• Check V- belt tension. If adjustment is made, check pulley alignment					M		
LUBRICATION							
• Lubricate fans bearings. Admit grease slowly until it shows up at seals. Do not over lubricate.					M		
NOTE Use low pressure grease gun only							
• Lubricate motor bearings according to the manufacturer's recommendation. Do not over lubricate.							E

FILTER BUILDING NO. 2 (047)
ROOF EXHAUST FAN
047-050-01-0000

MAINTENANCE TASK	FREQUENCY						
	D	W	M	Q	SA	A	0
ROOF EXHAUST FAN							
• Inspect fan wheels, shafts, housing scroll and side liners for corrosion or abrasive wear. Replace if necessary					M		
• Check all bolts and all connections for tightness					M		
• Clean housing, wheels, louvers, from dust and dirt					M		
• Clean dampers and check for freedom of movement, corrosion and erosion					M		
• Check alignment of all parts					M		
• Inspect wiring for deterioration					M		
LUBRICATION							
• Lubricate motor bearing according to the manufacturer's recommendations. Do not over lubricate					M		
• Lubricate fan bearings					M		

FILTER BUILDING NO. 2 (047)
AIR CONDITIONING UNIT
047-051-01-0000

MAINTENANCE TASK	FREQUENCY						
	D	W	M	Q	SA	A	0
AIR CONDITIONING UNIT							
• Inspect and clean air filter			M				

FILTER BUILDING NO. 2 (047)
BACKWASH WATER PUMPS
047-062-01-0000 THROUGH 047-062-03-0000

MAINTENANCE TASK	FREQUENCY						
	D	W	M	Q	SA	A	0
BACKWASH WATER PUMP							
• Check for unusual noise and excessive vibration	O						
• Check bearing temperature; bearing temperature should not be 120 degrees F above the surrounding temperature	O	M					
NOTES Operators are required to manually check the temperature of bearings daily. Mechanical Maintenance Personnel are required to check the temperature of bearings with a temperature sensing device, as recommended by the manufacturer weekly.							
• Check mechanical seal for leakage	O						
• Replace mechanical seal if required. Refer to manufacturer literature for procedure							M
• Clean bearing housing and bearing. Use kerosene or mineral spirits. Repack with clean ball-bearing grease. Check that water slingers are in correct places						M	
• Check for misalignment of coupling and shaft						M	
• Check shaft and shaft sleeve for scoring						M	
• Check coupling for wear						M	
• Refer to manufacturer's literature for trouble-shooting procedures							M
MOTOR							
• Check for unusual noise, excessive vibration and any other abnormal conditions	O						
• Check operating temperature for motor bearings; bearing temperature should not be 120 degrees F above the surrounding temperature							

FILTER BUILDING NO. 2 (047)
BACKWASH WATER PUMPS
047-062-01-0000 THROUGH 047-062-03-0000

MAINTENANCE TASK	FREQUENCY						
	D	W	M	Q	SA	A	0
MOTOR (Continued)							
NOTES							
Operators are required to manually check the temperature of motor bearings daily.							
Mechanical Maintenance Personnel are required to check the temperature of motor bearings with a temperature sensing device, as recommended by the motor manufacturer weekly.							
• Check terminal connections, assembly screws, bolts and nuts for tightness						E	
• Examine starter, switch, fuses and other control		E					
• Test insulation resistance of motor winding. Refer to manufacturer's literature for instruction						E	
• Clean the motor inside and outside. Use dry compressed air for dust and dry dirt and mineral spirits for accumulated sticky dirt and grease		M					
NOTE							
Do not use gasoline or other inflammable solvents.							
LUBRICATION							
• Lubricate pump bearings with ball-bearing grease. Do not over grease				M			
• Lubricate bearings of coupling through grease fittings in accordance with manufacturer's recommended procedure					E		
• Lubricate motor bearings in accordance with manufacturer recommendation. Do not over grease							E

FILTER BUILDING NO. 2 (047)
MAGNETIC FLOWMETER
047-036-01-0000, 047-036-02-0000
048-036-01-0000 AND 048-036-02-0000

MAINTENANCE TASK	FREQUENCY						
	D	W	M	Q	SA	A	0
MAGNETIC METER							
• Check for proper operation of metering system. Perform static test of line power, reference and control signal, current output, magnetic drive and coils, ultrasonic generator and metering electrodes					I		
• Replace metering tube if meter electrode assemblies are corroded or shorted and liner is worn; after reinstallation perform alignment procedure							I
• Perform dynamic performance check to verify accuracy and proper performance of electronic circuitry of flow converter. If accuracy is not within specified tolerance recalibrate converter					I		
• For detailed checking and replacement procedures of metering system refer to manufacturer's literature							I
• Refer to manufacturer's literature for trouble-shooting procedures							I

FILTER BUILDING NO. 2 (047)
OVERHEAD ROLLING DOORS
047-080-01-0000 AND 047-080-02-0000

MAINTENANCE TASK	FREQUENCY						
	D	W	M	Q	SA	A	0
ROLLING DOOR							
• Inspect visually for cleanliness and ease of operation			O				
• Check guides, guide mouths, curtain and hood for wear or damage							M
• Clean accumulated grease and dirt from guides and debris from bottom of guides							M
• Adjust brake when operating stroke has increased to 7/8-inch							M
• Replace worn brake lining							M
• Wash chain in kerosene							M
• Adjust tension of chain if necessary							M
• Adjust tension spring if necessary							M
• Clean magnetic reversing switch from dust, grease or moisture							M
• Refer to manufacturer's literature for trouble - shooting procedures			M				
LUBRICATION							
• Lubricate hoist shaft and gears							M
• Lubricate motor according to manufacturer's recommendation			E				
• Change oil in gear box							M
• Lubricate chain and guides						M	

FILTER BUILDING NO. 2 (047)
PLANT AIR SYSTEM - AIR COMPRESSORS
047-020-01-0000 AND 047-020-02-0000

MAINTENANCE TASK	FREQUENCY						
	D	W	M	Q	SA	A	0
AIR COMPRESSOR							
• Perform overall visual inspection for loose bolts, connections and wiring; note leaks	O						
• Check the entire system for unusual noise or excessive vibration	O						
• Check the entire installation for air leaks		O					
• Clean the unit by wiping it down	O						
• Check foundation bolts tightness						M	
• Check sheave alignment							M
• Check for proper belt tension. Adjust if necessary							M
• Drain accumulated moisture from the strainer; drain all condensate traps	O						
• Inspect and clean, if necessary crankcase breather					M		
• Clean oil strainer; use nonflammable cleaning solvent						M	
• Drain and clean filter shell, install new oil filter element and add one quart oil at shell					M		
• Inspect piston ring for wear and free movement						M	
• Check piston rod packing for leaks			M				
• Inspect oil scraper rings for leakage. Replace if necessary			M				
• Inspect air intake filter; clean if necessary, and install new gaskets					M		
• Inspect air intake filter; clean if necessary			M				
• Check cooling water temperature	O						
• Check for proper circulation of cooling water; clean clogged passages if required			M				
• Inspect condition of jacket						M	
• Check all safety devices for proper operation							

FILTER BUILDING NO. 2 (047)
PLANT AIR SYSTEM - AIR COMPRESSORS
047-020-01-0000 AND 047-020-02-0000

MAINTENANCE TASK	FREQUENCY						
	D	W	M	Q	SA	A	0
AIR COMPRESSOR (Continued)							
• Inspect pressure switches					E		
• Inspect all valves. Replace faulty parts					M		
• Clean solenoid valves, when leakage occurred. Inspect and replace worn or damaged parts							M
• Clean motor. Use mineral spirits					E		
• Refer to manufacturer's literature for trouble shooting procedures and for repair procedures							M
NOTE							
All air pressure must be relieved from compression cylinder before making repairs							
LUBRICATION							
• Check oil level; keep filled to oil level sight glass of crankcase	O						
• Check oil pressure; normal operating pressure should be 25 to 35 psi	O						
• Change crankcase oil					M		
• Lubricate electric motor in accordance with manufacturer recommendation							E

JUNCTION CHAMBER NO. 6 (049)
SLUICE GATES
049-012-01-0000 THROUGH 049-012-06-0000

MAINTENANCE TASK	FREQUENCY						
	D	W	M	Q	SA	A	0
SLUICE GATE							
• Clean stem			O				
NOTES							
The frequency for cleaning the sluice gate stem applies to new equipment.							
The actual required cleaning frequency will be determined based on use of equipment							
• Clean gate guide groove and stem guide of any foreign matter				O			
• Check operating nut				M			
• Check gate guide groove and stem guide for proper alignment and bolts for tightness					M		
• Check wedge attaching studs and locknuts for proper tightness. Adjust if required.					M		
ELECTRIC OPERATOR							
• Clean geared limit and torque switch contact. Use mineral spirits on lint-free cloth					E		
• Check limit switch gear box for damage; replace if necessary					E		
• Check wiring and push button contacts					E		
• Refer to manufacturer's literature for trouble-shooting procedures							E
LUBRICATION							
• Lubricate drive sleeve top bearing			M				
• Lubricated threaded portion of stem			M				
• Check condition of lubricant					M		

FILTER BUILDING NO. 2 (048)
DEWATERING PUMP
048-017-01-0000 AND 048-017-02-0000

MAINTENANCE TASK	FREQUENCY						
	D	W	M	Q	SA	A	O
DEWATERING PUMP							
• Check for unusual noise and vibration.	O						
• Check packing and replace if necessary. Verify that the lantern ring is centered in the stuffing box at the entrance of the water seal piping connection.					M		
• Check temperature of stuffing box, if overheating, packing may be too tight and is not allowing leakage of flushing water.			M				
• Check operating temperature of motor bearings; bearing temperature should not exceed 200 degrees F.	O	M					
NOTES Operators are required to manually check the temperature of motor bearings daily. Mechanical Maintenance Personnel are required to check the temperature of motor bearings with a temperature sensing device, as recommended by the motor manufacturer weekly.							
• Check shaft or shaft sleeve for scoring; scoring accelerates packing wear.					M		
• Check alignment of pump and motor; skim up unit if necessary; if misalignment occurs frequently, inspect the entire piping system; unbolt piping at suction and discharge flanges to see if it springs away indication strain on casing; inspect all pipe supports for soundness and effective support of load.					M		
• Check the drive belt for excessive wear; replace if necessary.					M		
• Check parts of motion control variable speed sheave for wear or damage. Replace if necessary.							E
• Clean motor. Use mineral spirits.			E				
• Refer to manufacturer's literature for trouble-shooting procedures.							M

DENITRIFICATION FILTERS NOS. 1 THROUGH 20 (014)
SUMP PUMP
014-008-01-0000

MAINTENANCE TASK	FREQUENCY						
	D	W	M	Q	SA	A	0
SUMP PUMP							
• Check operating temperature of motor bearings; bearing temperature should not be above 200 degrees F	O	M					
NOTES Operators are required to manually check the temperature of motor bearings daily. Mechanical Maintenance Personnel are required to check the temperature of motor bearings with a temperature sensing device, as recommended by the motor manufacturer weekly.							
• Check for unusual noise and excessive vibration; refer to manufacturer's literature for cause and corrective action	O						
• Check impeller clearance; adjust as required					M		
• Check coupling for wear and replace if necessary					M		
• Check for misalignment of coupling and shaft					M		
• Check shaft for straightness					M		
• Check water lubrication line for damage and tightness					M		
• Refer to manufacturer's literature for trouble-shooting procedures							M
LUBRICATION							
• Lubricate thrust ball bearings			M				
• Lubricate electric motor in accordance with manufacturer recommendation. Do not over grease							E

DENITRIFICATION FILTERS NOS. 1 THROUGH 20 (014)
MONORAIL HOIST
014-009-01-0000

MAINTENANCE TASK	FREQUENCY						
	D	W	M	Q	SA	A	0
MONORAIL HOIST- GENERAL							
• Check all functional operating mechanism for any maladjustments that may interfere with proper operation			M				
• Check that warning labels, push buttons markings or capacity markings have not been removed or are illegible					M		
• Check bolts, nuts and rivets for tightness					M		
• Check pins, bearings, shafts and gears for excessive wear, cracks, distortion and corrosion; replace defective parts					M		
• Check brake system for excessive wear and drift					M		
• Check electrical contactors, limit switches and push buttons for pitting, loose wires, deterioration and contact wear						E	
• Inspect starter. Replace contact and coil if necessary						E	
• For detailed maintenance procedures, refer to manufacturer's literature							M
HOOK							
• Check for deformation and chemical damage				M			
• Check throat opening; replace if bent from normal opening				M			
• Check for twist of hook eye or hook; replace if twisted				M			
• Check if hook eye or hook is bent; replace if bent				M			
• Check for hinge action wear at point of contact and elongation of hook eye				M			
LOAD BEARING ROPE							
• Check load bearing rope for wear, twist, distortion, kinks, strand breaks, improper dead ending; replace rope if conditions described above are excessive			M				

DENITRIFICATION FILTERS NOS. 1 THROUGH 20 (014)
MONORAIL HOIST
014-009-01-0000

MAINTENANCE TASK	FREQUENCY						
	D	W	M	Q	SA	A	0
LUBRICATION							
• Check gear oil; maintain level at oil bath			M				
• Lubricate rope						M	
• Lubricate bearings					M		

DENITRIFICATION FILTERS NOS. 21 THROUGH 26 AND 31 THROUGH 36 (O48)
SUPPLY FAN
048-048-03-0000

MAINTENANCE TASK	FREQUENCY						
	D	W	M	Q	SA	A	0
SUPPLY FAN							
• Check for unusual noise and excessive vibration. If noises develop, check the fan for worn bearings, proper installation and anchoring and for adequate clearance of rotating members							M
• Check condition of V-belt; replace if necessary					M		
• Check V-belt tension. If adjustment is made, check pulley alignment					M		
LUBRICATION							
• Lubricate fan bearings. Admit grease slowly until it shows up at seals. Do not over lubricate					M		
NOTE Use low pressure grease gun only.							
• Lubricate motor bearings according to the manufacturer's recommendation. Do not over lubricate							E

DENITRIFICATION FILTERS NOS 21 THROUGH 26 AND 31 THROUGH 36 (048)
SUMP PUMPS
048-008-01-0000 AND 048-008-02-0000

MAINTENANCE TASK	FREQUENCY						
	D	W	M	Q	SA	A	0
SUMP PUMP							
• Check for unusual noise and excessive vibration refer to manufacturer's literature for cause and corrective action	O						
• Test moisture detector for continuity			E				
• Refer to manufacturer's literature for trouble-shooting procedures							M
LUBRICATION							
• Lubricate electric motor in accordance with manufacturer recommendation. Do not over grease							E

CHEMICAL HANDLING FACILITIES (042)
CHEMICAL HANDLING EQUIPMENT PLATFORM (042)
METHANOL TRANSFER PUMPS
042-095-01-0000 AND 042-095-02-0000

MAINTENANCE TASK	FREQUENCY						
	D	W	M	Q	SA	A	O
METHANOL TRANSFER PUMP							
• Check for excessive vibration and unusual noises					O		
• Check bearing temperature with a thermometer. If bearings are hot, refer to manufacturer's literature for possible cause and cure			O				
• Check alignment of coupling					M		
• Refer to manufacturer's literature for trouble-shooting procedures							M
LUBRICATION							
• Lubricate mechanical seal			O				
• Lubricate electric motor in accordance with manufacturer's instruction					O		
• Check oil level in bearing reservoir. Keep filled to sight glass level; do not overfill			O				
• Drain oil reservoir and refill						O	

CHEMICAL HANDLING FACILITIES (042)
METHANOL FEED PUMPS
042-096-01-0000 THROUGH 042-096-04-0000

MAINTENANCE TASK	FREQUENCY						
	D	W	M	Q	SA	A	O
METHANOL FEED PUMP							
• Check and tighten all nuts and bolts on pumping unit					M		
• Check diaphragm for deterioration, holes, cracks and tears. Replace if necessary						M	
• Examine check valves for dirt and worn parts					M		
• Clean or replace check valve balls, seats and O-rings if necessary						M	
• Refer to manufacturer's literature for trouble-shooting procedures							M
ELECTRIC MOTOR AND CAPACITY CONTROLS							
• Check electrical control. Replace the fuse, motor of capacity control, potentiometer or the entire printed circuit if necessary							E
• Check manufacturer's literature for trouble-shooting procedures							E
• Check operation temperature of motor bearings	O	M					
NOTES Operators are required to manually check the temperature of motor bearings daily. Mechanical Maintenance Personnel are required to check the temperature of motor bearings with a temperature sensing device, as recommended by the motor manufacturer weekly.							
LUBRICATION							
• Lubricate motor, bearings, gear teeth, threads and sliding surfaces of electric capacity control					E		
• Lubricate electric motor in accordance with manufacturer recommendation			E				
• Drain and replace speed reducer oil				M			

CHEMICAL HANDLING FACILITIES (042)
METHANOL FEED PUMPS
042-096-01-0000 THROUGH 042-096-04-0000 (cont.)

MAINTENANCE TASK	FREQUENCY						
	D	W	M	Q	SA	A	O
LUBRICATION (cont.)							
NOTE Fill only to oil level plug.							
• Drain and replace pump housing oil				M			
NOTE Fill to the middle of oil level sight glass.							

CHEMICAL HANDLING FACILITIES (042)
SUMP PUMP
043-008-01-0000

MAINTENANCE TASK	FREQUENCY						
	D	W	M	Q	SA	A	O
SUMP PUMP							
• Check operating temperature of motor bearings; bearing temperature should not be above 200 degrees F	O	M					
NOTES Operators are required to manually check the temperature of motor bearings daily. Mechanical Maintenance Personnel are required to check the temperature of motor bearings with a temperature sensing device, as recommended by the motor manufacturer weekly.							
• Check for unusual noise and excessive vibration; refer to manufacturer's literature for cause and corrective action	O						
• Check impeller clearance; adjust as required					M		
• Check coupling for wear and replace if necessary					M		
• Check for misalignment of coupling and shaft					M		
• Check shaft for straightness					M		
• Check water lubricating line for damage and tightness					M		
• Refer to manufacturer's literature for trouble-shooting procedures							M
LUBRICATION							
• Lubricate trust ball bearings			M				
• Lubricate electric motor in accordance with manufacturer recommendation. Do not over grease							E

CHEMICAL HANDLING FACILITIES (042)
COMBUSTIBLE GAS DETECTION SENSORS
043-044-01-0000 THROUGH 043-044-05-0000

MAINTENANCE TASK	FREQUENCY						
	D	W	M	Q	SA	A	O
COMBUSTIBLE GAS DETECTION SYSTEM							
• Test and adjust alarm and warning points in accordance with the manufacturer's recommendation					M		
• Check alarm circuit					M		
• Check the calibration					M		

POST AERATION-CHLORINATION TANKS (016)
SLUICE GATES
016-012-01-0000 THROUGH 016-012-12-0000

MAINTENANCE TASK	FREQUENCY						
	D	W	M	Q	SA	A	O
SLUICE GATE							
• Clean stem.			O				
NOTE The frequency for cleaning the sluice gate stem applies to new equipment. The actual required cleaning frequency will be determined based on use of equipment.							
• Clean gate guide groove and stem guide of any foreign matter.							O
• Check gate guide groove and stem guide for proper alignment and bolts for tightness.						M	
• Check wedge attaching studs and locknuts for proper tightness. Adjust if required.						M	
ELECTRIC OPERATOR							
• Clean geared limit and torque switch contact. Use mineral spirits on lint-free cloth.					E		
• Check limit switch gear box for damage; replace if necessary.					E		
• Check wiring and push button contacts.					E		
• Refer to manufacturer's literature for trouble-shooting procedures.							E
LUBRICATION							
• Lubricate drive sleeve top bearing.			M				
• Lubricate threaded portion of stem.			M				
• Check condition of lubricant.					M		

POST AERATION-CHLORINATION TANKS (016)
DEWATERING PUMP
016-017-01-0000

MAINTENANCE TASK	FREQUENCY						
	D	W	M	Q	SA	A	O
DEWATERING PUMP							
• Check for unusual noise and excessive vibration	O						
• Wash down pump with pressure hose					M		
• Check and/or clean float switches. Visually inspect and work in sequence to check pump operation				M			
• Perform overall visual inspection						M	
• Refer to manufacturer's literature for repairs requiring removal of pump, inspection tips and trouble-shooting procedures							M
LUBRICATION							
• Check seal oil. Drain and replace if oil is discolored or emulsified. See manufacturer's literature for proper lubricant and replacement procedure						M	

POST AERATION-CHLORINATION TANKS (016)
CHLORINATED SAMPLE PUMPS
016-032-02-0000 AND 016-032-03-0000

MAINTENANCE TASK	FREQUENCY						
	D	W	M	Q	SA	A	O
SAMPLE PUMP -GENERAL							
• Perform overall visual inspection.						M	
• Check guide vane seal ring; replace if necessary.						M	
NOTE Do not start unit until pump is filled with water.							
• Refer to manufacturer's literature for trouble-shooting procedures.							M
LUBRICATION							
• Lubricate motor; refer to manufacturer's instruction.			E				

POST AERATION-CHLORINATION TANKS (016)
PRE-SULFONATED SAMPLE PUMP
016-032-04-0000

MAINTENANCE TASK	FREQUENCY						
	D	W	M	Q	SA	A	O
PRE-SULFONATED SAMPLE PUMP - GENERAL							
• Check impeller suction-side clearance gap for damage or excessive wear						M	
• Check supply cable for tears, scratches or blistering						M	
• Measure insulation resistance						E	
LUBRICATIONS							
• Change oil in accordance with manufacturer's recommendations							M

POST AERATION-CHLORINATION TANKS (016)
DISSOLVED OXYGEN METER
016-076-01-0000

MAINTENANCE TASK	FREQUENCY						
	D	W	M	Q	SA	A	O
DO METER							
• Check level of electrolyte in reservoir; replenish.			I				
• Change the electrolyte.						I	
• Check probe for algae and other growth; clean.			I				
• Check for excessive drift of the calibration setting. Re-calibrate if required. Refer to manufacturer's literature for procedure.			I				
• Check membrane for damage; replace if necessary; follow procedure recommended by manufacturer.					I		

JUNCTION CHAMBER NO. 4 (017)
TOTAL CHLORINE RESIDUAL ANALYZER

MAINTENANCE TASK	FREQUENCY						
	D	W	M	Q	SA	A	O
CHLORINE RESIDUAL ANALYZER							
• Electronics Check		E					
• Leak Check, Verify Meter Reading		M					
• Electrode			M				
• Reagent			M				
• Calibration			I				
• Inlet Screen				M			
• Tubing				M			
• Reagent Purification Column				M			
• Pump Seals				M			
• Pump Lubrication (use high quality machine oil and grease)				M			
• Air Filter Replacement				M			
• Replace Sensing Electrode						M	
• Check Electronics Calibration						E	
• Replace Air Pump						M	
• Replace "O" Rings and Grommets, if needed						M	

JUNCTION CHAMBER NO. 4
FINAL EFFLUENT SAMPLE PUMPS
017-032-01-0000

MAINTENANCE TASK	FREQUENCY						
	D	W	M	Q	SA	A	O
SAMPLE PUMP -GENERAL							
• Perform overall visual inspection.						M	
• Check guide vane seal ring; replace if necessary.						M	
NOTE Do not start unit until pump is filled with water.							
• Refer to manufacturer's literature for trouble-shooting procedures.							M
LUBRICATION							
• Lubricate motor; refer to manufacturer's instruction.			E				

DECHLORINATION FACILITIES (046)
TOTAL CHLORINE RESIDUAL ANALYZER
046-073-01-0000, 046-073-02-0000, 046-073-03-0000

MAINTENANCE TASK	FREQUENCY						
	D	W	M	Q	SA	A	O
• Electronics Check		X					
• Leak Check		X					
• Verify Meter Reading		X					
• Electrode			X				
• Reagent			X				
• Calibration			X				
• Inlet Screen				X			
• Tubing				X			
• Reagent Purification Column				X			
• Pump Seals				X			
• Pump Lubrication (use high-quality machine oil and grease)				X			
• Air Filter Replacement				X			
• Replace Sensing Electrode						X	
• Check Electronics Calibration						X	
• Replace Air Pump						X	
• Replace "O" Rings and Grommets						X	X

DECHLORINATION FACILITIES (046)
MOORE INDUSTRIES - DLM
DIGITAL LINEARIZING MODULE

MAINTENANCE TASK	FREQUENCY						
	D	W	M	Q	SA	A	O
• Input/Output terminals and Conductors Cleaning and Tightening							X

DECHLORINATION FACILITIES (046)
AIR PADDING SYSTEM

MAINTENANCE TASK	FREQUENCY						
	D	W	M	Q	SA	A	O
AIR DRYER							
• Check Desionant						X	
• Check Solenoid Operation			X				
PREFILTER							
• Clean or Replace Prefilter					X		
AFTER FILTER							
• Clean or Replace Afterfilter					X		
AUTOMATIC DRAIN VALVES							
• Check Operation		X					
• Clean and Inspect							X
PRESSURE SWITCHES							
• Check set points					X		

DECHLORINATION FACILITIES (046)
GAS MASKS

MAINTENANCE TASK	FREQUENCY						
	D	W	M	Q	SA	A	O
INSPECTION							
• Check Cylinder Pressure		X					
• Air Tightness			X				
• Audi-Larm Function			X				
• Diaphragm			X				
• Main Line Valves			X				
• By-Pass Valves			X				
AFTER USING							
• Clean and Sanitize Apparatus							X
• Examine Apparatus							X
RECORD KEEPING							
• Maintain Update Record Tags on Apparatus							X

DECHLORINATION FACILITIES (046)
EVAPORATOR
046-250-01-0000, 046-250-02-0000, 046-250-03-0000

MAINTENANCE TASK	FREQUENCY						
	D	W	M	Q	SA	A	O
INSPECTION							
• Routine						X	
• Cathodic Protection						X	
• Calibration						X	
• Thermostat						X	
• Water Level Control						X	
• Alarm Switches						X	
• Temperature Switch						X	
• Water Supply Control Valve						X	
• Gas Flow Shut-off Valve						X	

DECHLORINATION FACILITIES (046)
LEAK DETECTOR
046-252-01-0000, 046-252-02-0000, 046-252-03-0000

MAINTENANCE TASK	FREQUENCY						
	D	W	M	Q	SA	A	O
LEAK DETECTOR							
• Test		X					
• Reset "Zero"				X			
• Calibrate			X				

DECHLORINATION FACILITIES (046)
PRESSURE REDUCING VALVE
046-264-01-0000, 046-264-02-0000

MAINTENANCE TASK	FREQUENCY						
	D	W	M	Q	SA	A	O
INSPECTION							
• Valve Plug and Seat			X				

DECHLORINATION FACILITIES (046)
SULFONATORS
046-251-01-0000, 046-251-02-0000, 046-251-03-0000

MAINTENANCE TASK	FREQUENCY						
	D	W	M	Q	SA	A	O
SULFONATORS							
• Calibrate sufomatic valve, transmitter vacuum switches, alarms				X			
• Plug and seat surfaces						X	
• "O" Rings						X	
• Vacuum stabilizing and relief valve diaphragm						X	
• Valve seat and plug						X	
• Variable orifice						X	
• Gas filter						X	
• Flow meter						X	
• Drain valve						X	

DECHLORINATION FACILITIES (046)
SLUDGE MIXERS
017-028-01-0000 AND 017-028-02-0000

MAINTENANCE TASK	FREQUENCY						
	D	W	M	Q	SA	A	O
MIXER							
• Check for unusual noise and excessive vibration	O						
• Check for overheating. Operating unit temperature should not exceed 180 degrees F	O						
• Check for oil leakage	O						
• Clean and flush breather elements			M				
• Check gap, angular and offset alignment of coupling					M		
• Check for worn bearings, seals, O-rings. Replace if necessary in accordance with manufacturer's recommended procedures							M
• Refer to manufacturer's literature for trouble-shooting procedures							M
LUBRICATION							
• Lubricate oil seals			M				
• Check oil level in unit. Add oil if necessary. Do not overfill		M					
• Add grease to all grease fittings			M				
• Examine lube oil for contamination. If contaminated, drain and refill lubricating system			M				
• Change lubricant					M		
• Lubricate coupling. Use standard grease gun; fill with grease until an excess appears at the opening on the other side					M		
• Lubricate bearings of motor in accordance with manufacturer's recommended procedure. Do not over lubricate					E		

RECLAIMED WATER PUMPING STATION
KNIFE GATE VALVE
086-047-01-0000 THROUGH 086-047-08-0000

MAINTENANCE TASK	FREQUENCY						
	D	W	M	Q	SA	A	O
KNIFE GATE VALVE							
• Operate valves. Note any binding or leaking				M			

RECLAIMED WATER PUMPING STATION
WATER REUSE PUMP
086-062-01-0000, 086-062-02-0000 AND 086-062-03-0000

MAINTENANCE TASK	FREQUENCY						
	D	W	M	Q	SA	A	O
WATER REUSE PUMP							
• Check for unusual noise and vibration, loose bolts, loose piping, dirt and corrosion			M				
• Grease stuffing box after cleaning fittings of dirt and deteriorated lubricants			M				
• Lubricate upper and lower motor bearings					E		
• Inject new grease until old grease is forced out of the drain plug					E		
• Check general condition					E		

RECLAIMED WATER PUMPING STATION
RELIEF VALVE
086-012-01-0000

MAINTENANCE TASK	FREQUENCY						
	D	W	M	Q	SA	A	O
RELIEF VALVE							
• Inspect dash pot and piping for oil leaks			M				
• Check oil level in reservoir			M				

FINAL SEDIMENTATION TANKS 1-12 (012) AND 13-20 (061)
SLUICE GATES, SLIDE GATES AND FLOW CONTROL GATES
012-012-01-0000 THROUGH 012-012-53-0000
012-013-01-0000 THROUGH 012-013-30-0000
061-012-01-0000 THROUGH 061-012-68-0000
061-013-27-0000

MAINTENANCE TASK	FREQUENCY						
	D	W	M	Q	SA	A	O
SLUICE GATES, SLIDE GATES AND FLOW CONTROL GATES							
• Clean stem			O				
NOTE The frequency for cleaning the sluice gate stem applies to new equipment. The actual required cleaning frequency will be determined based on use of equipment.							
• Clean gate guide groove and stem guide of any foreign matter							O
• Check gate guide groove and stem guide for proper alignment and bolts for tightness						M	
• Check wedge attaching studs and locknuts for proper tight-ness. Adjust if required						M	
ELECTRIC OPERATOR							
• Clean geared limit and torque switch contact. Use mineral spirits on lint-free cloth					E		
• Check limit switch gear box for damage; replace if necessary					E		
• Check wiring and push-button contacts					E		
• Refer to manufacturer's literature for trouble-shooting procedures							E
LUBRICATION							
• Lubricate drive sleeve top bearing			M				
• Lubricate threaded portion of stem			M				
• Check condition of lubricant					M		

FINAL SEDIMENTATION TANKS 1-12 (012)
RATE CONTROLLER
012-014-01-0000

MAINTENANCE TASK	FREQUENCY						
	D	W	M	Q	SA	A	O
RATE CONTROLLER							
• Check for leaks on all connections	O						
• Check for pump output pressure. Adjust if necessary					I		
NOTE Pump output pressure should be 10-15 psi higher than the maximum line pressure.							
• Check the pressure sensor balance and operation as recommended by manufacturer					I		
• Clean the pressure sensor orifices and nozzles with the cleaning pins or by flushing if required					I		
• Check the output at zero flow as recommended by manufacturer					I		
• Refer to manufacturer's literature for trouble-shooting procedures							I
• For detailed maintenance procedures of instrumentation equipment refer to manufacturer's literature							I
TRANSMITTER							
• Check for leak of mercury on all connections	O						
• Check calibration and operation as recommended by manufacturer					I		
• Check zero adjustment					I		
LUBRICATION							
• Check the oil level in the pump reservoir and refill if required			O				
• Lubricate motor through the two rubber hoods. Use only a few drops of machine oil					E		

FINAL SEDIMENTATION TANKS 1-12 (012) AND 13-20 (061)
LONGITUDINAL COLLECTOR DRIVES
012-030-01-0000 THROUGH 012-030-24-0000
061-030-01-0000 THROUGH 061-030-16-0000
LONGITUDINAL AND CROSS COLLECTOR DRIVES
012-031-01-0000 THROUGH 012-031-24-0000
061-031-01-0000 THROUGH 061-031-16-0000

MAINTENANCE TASK	FREQUENCY						
	D	W	M	Q	SA	A	O
LONGITUDINAL AND LONGITUDINAL AND CROSS COLLECTORS							
• Check that all loose sprockets between set collars are turning freely					M		
• Check chain slack; remove links where necessary to obtain proper slack							M
• Check proper alignment of sprockets and shafts					M		
• Check anchor bolts of wall bearings					M		
• Check links, side bars and rollers of drive chain for wear. Replace, if necessary					M		
• Check sprocket teeth for wear and corrosion. Replace, if necessary					M		
• Refer to manufacturer's literature for trouble-shooting procedures							M
SPEED REDUCER							
• Check operating temperature		M					
• Check seals for leakage. Replace if necessary. Refer to manufacturer's literature for procedure			M				
• Clean vent of reducer		O					
MOTOR							
• Check for excessive noise or vibration	O						
• Check operating temperature of motor bearings; bearing temperature should not be above 200 degrees F	O	M					

FINAL SEDIMENTATION TANKS 1-12 (012) AND 13-20 (061)
LONGITUDINAL COLLECTOR DRIVES
012-030-01-0000 THROUGH 012-030-24-0000
061-030-01-0000 THROUGH 061-030-16-0000
LONGITUDINAL AND CROSS COLLECTOR DRIVES
012-031-01-0000 THROUGH 012-031-24-0000
061-031-01-0000 THROUGH 061-031-16-0000

MAINTENANCE TASK	FREQUENCY						
	D	W	M	Q	SA	A	O
MOTOR (Continued)							
NOTE							
Operators are required to manually check the temperature of motor bearings daily.							
Mechanical Maintenance Personnel are required to check the temperature of motor bearings with a temperature sensing device, as recommended by the motor manufacturer weekly.							
• Check for proper alignment of motor shaft and couplings			M				
LUBRICATION							
• Lubricate drive chain, bearings, jaw clutches, shear faces of sprockets and hubs and chain tightener sprockets			M				
• Grease wall bearings when tank is drained					M		
• Check oil level of speed reducer		O					
• Check oil for water condensation; if water is present drain completely, flush out and fill to proper level			M				
• Change oil in speed reducer reservoir and adjust the oil viscosity to suit temperature as recommended by manufacturer					M		
• Lubricate coupling					M		
• Lubricate motor bearings. Stop motor and apply grease with hand level gun only. Do not over grease					E		

FINAL SEDIMENTATION TANKS 1-12 (012)
SCUM PIPES AND OPERATORS
012-174-01-0000 THROUGH 012-174-24-0000

MAINTENANCE TASK	FREQUENCY						
	D	W	M	Q	SA	A	O
SCUM PIPE OPERATORS							
• Check oil level of drive unit. Check for condensation. If water is present, drain, flush, and refill with manufacturers recommended lubricant.			M				
• Lubricate threaded operator shaft. Allow 10 drops of SAE 40W motor oil to run down shaft. Run stem up and down on threads once to spread lubricant.			M				
SCUM PIPES							
• Check inside of pipe at open end to see if seal is leaking when scum pipe is not being used to skim. If water is entering pipe, either Hycar seal or plywood gasket is leaking. Re-tighten end support bolts to see if gasket is leaking. Otherwise, readjust or reposition seals. If this does not work, seal must be replaced.			M				
• Remove any floating debris before it enters pipe. Remove any obstructions from pipe which constrict or block flow.	O						
• Lubricate scum pipe end supports with a high quality marine grade lubricant such as "HydroTex 50" manufactured by Lubrication Engineers.			M				

FINAL SEDIMENTATION TANKS 1-12 (012)
SECONDARY CONTROL WEIR
012-011-01-0000 THROUGH 012-011-02-0000

MAINTENANCE TASK	FREQUENCY						
	D	W	M	Q	SA	A	O
SECONDARY CONTROL WEIR							
• Clean weir sliding surface and stem guide of any foreign matter.							O
• Check weir and stem guide for proper alignment and check bolts for tightness.						M	
ELECTRIC OPERATOR							
• Clean geared limit and torque switch contact. Use mineral spirits or lint free cloth.					E		
• Check limit switch gearbox for damage; replace if necessary.					E		
• Check wiring and push-button contacts					E		
• Refer to manufacturer's literature for trouble-shooting procedures.						E	
LUBRICATION							
• Lubricate drive sleeve & gearbox top bearings.			M				
• Lubricate threaded portion of stems.			M				
• Check condition of lubricant.					M		

SLUDGE PUMPING STATIONS NO.1-5 (022, 023, 024, 062 and 063)
SUMP PUMPS
022-008-01-0000 THROUGH 063-008-01-0000

MAINTENANCE TASK	FREQUENCY						
	D	W	M	Q	SA	A	O
SUMP PUMPS							
• Check operating temperature of motor bearings; bearing temperature should not be above 200 degrees F.	O	M					
NOTES Operators are required to manually check the temperature of motor bearings daily. Mechanical Maintenance Personnel are required to check the temperature of motor bearings with a temperature sensing device, as recommended by the Motor manufacturer weekly.							
• Check for unusual noise and excessive vibration; refer to manufacturer's literature for cause and corrective action	O						
• Check impeller clearance; adjust as required					M		
• Check coupling for wear and replace if necessary					M		
• Check for misalignment of coupling and shaft					M		
• Check water lubrication line for damage and tightness					M		
• Refer to manufacturer's literature for trouble-shooting procedures							M
LUBRICATION							
• Inspect oil level in reservoir of intermediate bearings; replenish		O					
• Lubricate thrust bearings in motor bracket as recommended by the manufacturer.			E				

SLUDGE PUMPING STATIONS NO.1-5 (022, 023, 024, 062 and 063)
HOISTING EQUIPMENT
022-009-01-0000 THROUGH 024-009-01-0000

MAINTENANCE TASK	FREQUENCY						
	D	W	M	Q	SA	A	O
HOISTING EQUIPMENT - GENERAL							
• Check all functional operating mechanisms for any maladjustments that may interfere with proper operation			M				
• Check that warning labels, push button markings have not bee removed or are illegible					M		
• Check bolts, nuts and rivets for tightness					M		
• Check brake system for excessive wear and drift					M		
• Check electrical contactors, limit switches and push buttons for pitting, loose wires, deterioration and contact wear					E		
• For detailed maintenance procedures refer to manufacturer's literature							M
LOAD BEARING S.S. CABLE							
• Check load bearing cable for wear, twist, distortion, kinks, strand breaks, improper dead ending; replace cable if conditions described above are excessive			M				
HOOKS							
• Check for deformation and chemical damage			M				
• Check throat opening; replace if bent from normal opening			M				
• Check for twists of hook eye or hook; replace if twisted			M				
• Check if hook eye or hook is bent; replace if bent			M				
• Check for hinge action wear at point of contact and elongation of hook eye			M				
LUBRICATION							
• Check gear oil; maintain level at oil bath			M				
• Lubricate bearings and shafts					M		

SLUDGE PUMPING STATIONS NO.1-5 (022, 023, 024, 062 and 063)
HOISTING EQUIPMENT (Continued)
062-009-01-0000 AND 063-009-01-0000

MAINTENANCE TASK	FREQUENCY						
	D	W	M	Q	SA	A	O
OVERHEAD CRANE - GENERAL							
• Check all functional operating mechanisms for any maladjustments that may interfere with proper operation			M				
• Check that warning labels, push button markings or capacity markings have not been removed or are illegible					M		
• Check bolts, nuts and rivets for tightness					M		
• Check pins, bearings, shafts and gears for excessive wear, cracks, distortion and corrosion; replace defective parts					M		
• Check brake system for excessive wear and drift						M	
• Check electrical contactors, limit switches and push buttons for pitting, loose wires, deterioration and contact wear						E	
• For detailed maintenance procedures, refer to manufacturer's literature							M
HOOKS							
• Check for deformation and chemical damage			M				
• Check throat openings; replace if bent from normal opening			M				
• Check for twists of hook eye or hook; replace if twisted			M				
• Check if hook eye or hook is bent; replace if bent			M				
• check for hinge action wear at point of contact and elongation of hook eye			M				
LOAD BEARING S.S. CABLE							
• Check load bearing cable for wear, twist, distortion, kinks, strand breaks, improper dead ending; replace cable if conditions described above are excessive			M				
LUBRICATION							
• Check gear oil; maintain level at oil bath			M				
• Lubricate bearings through a grease fitting					M		

SLUDGE PUMPING STATIONS NO.1-5 (022, 023, 024, 062 and 063)
MAGNETIC WASTE SLUDGE RATE CONTROLLERS
023-014-01-0000 THROUGH 023-014-03-0000

MAINTENANCE TASK	FREQUENCY						
	D	W	M	Q	SA	A	O
MAGNETIC METER							
• Check for proper operation of metering system. Perform static test of line power, reference and control signal, current output, magnetic drive and coils, ultrasonic generator and metering electrodes					I		
• Replace metering tube if meter electrode assemblies are corroded or shorted and liner is worn; after reinstallation perform alignment procedure							I
• Perform dynamic performance check to verify accuracy and proper performance of electronic circuitry of flow converter. If accuracy is not within specified tolerance recalibrate converter					I		
• For detailed checking and replacement procedures of metering system refer to manufacturer's literature							I
• Refer to manufacturer's literature for trouble-shooting procedures							I
TRANSMITTER							
• Check for leak of mercury on all connections	O						
• Check calibration and operation as recommended by the manufacturer					I		
• Check zero adjustment					I		
ELECTRIC VALVE OPERATOR							
• Check actuator for proper function					E		
• Inspect motor brushes. Replace if the brush length is less than 3/8 inch						E	
• Inspect change gears					E		
• Refer to manufacturer's literature for trouble-shooting procedures							E

SLUDGE PUMPING STATIONS NO.1-5 (022, 023, 024, 062 and 063)
RATE CONTROLLERS (Continued)
023-014-01-0000 THROUGH 023-014-03-0000

MAINTENANCE TASK	FREQUENCY						
	D	W	M	Q	SA	A	O
ELECTRONIC CONTROL MODULE							
• Check dead band adjustment in accordance with manufacturer instruction							
• Refer to manufacturer's literature for trouble-shooting procedures							
LUBRICATION							
• Check the oil level in the pump reservoir and refill if required			O				
• Lubricate motor of pump through the two rubber hoods. Use only a few deops of machine oil					E		
• Grease the gear teeth of valve activator					E		
• Brush grease onto the lead screw of valve actuator					E		

SLUDGE PUMPING STATIONS NO.1-5 (022, 023, 024, 062 and 063)
FBS PUMPS
061-016-01-0000 AND 061-016-02-0000

MAINTENANCE TASK	FREQUENCY						
	D	W	M	Q	SA	A	O
FBS PUMP							
• Check impeller suction-side clearance gap for damage or excessive wear						M	
• Check supply cable for tears, scratches or blistering						M	
• Measure insulation resistance						E	
LUBRICATIONS							
• Change oil in accordance with manufacturer's recommendations							M

SLUDGE PUMPING STATIONS NO.1-5 (022, 023, 024, 062 and 063)
DEWATERING PUMPS
062-017-01-0000 AND 063-017-01-0000

MAINTENANCE TASK	FREQUENCY						
	D	W	M	Q	SA	A	O
DEWATERING PUMP							
• Check impeller suction-side clearance gap for damage or excessive wear						M	
• Check supply cable for tears, scratches or blistering						M	
• Measure insulation resistance						E	
LUBRICATIONS							
• Change oil in accordance with manufacturer's recommendations							M

SLUDGE PUMPING STATIONS NO.1-5 (022, 023, 024, 062 and 063)
RETURN SLUDGE PUMPS
022-033-01-0000 THROUGH 063-033-05-0000

MAINTENANCE TASK	FREQUENCY						
	D	W	M	Q	SA	A	O
RETURN SLUDGE PUMP							
• Check for unusual noise and excessive vibration						E	
• Check bearing temperature; bearing temperature should not be above 200 degrees F	O	M					
NOTES Operators are required to manually check the temperature of bearings daily. Mechanical Maintenance Personnel are required to check the temperature of bearings with a temperature sensing device, as recommended by the manufacturer weekly.							
• Check packing and replace if necessary. Be sure the lantern ring is centered in stuffing boxes at the entrance of water seal piping					M		
• Inspect check valve						M	
• Check shaft or shaft sleeve for scoring					M		
• Check alignment of pump and motor			M				
• Clean out water seal piping. Remove any deposit or scaling							M
• Refer to manufacturer's literature for trouble-shooting procedures							M
EDDY-CURRENT COUPLING AND DRIVE							
• Clean unit using compressed air to remove dust and mineral spirits to remove grease and other adherent substances						E	
• Remove filters from the clutch housing and flush with cleaning solvent						E	
• Check slip rings and brushes; if slip rings become pitted or worn, replace. If brushes become so short that they bind in the brush holder, replace					E		

SLUDGE PUMPING STATIONS NO.1-5 (022, 023, 024, 062 and 063)
RETURN SLUDGE PUMPS (Continued)
022-033-01-0000 THROUGH 063-033-05-0000

MAINTENANCE TASK	FREQUENCY						
	D	W	M	Q	SA	A	O
EDDY-CURRENT COUPLING AND DRIVE (Continued)							
• Clean slip rings with canvas or other hard-woven, non-linting material. Do not use any lubricant							
• Check operating temperature of motor bearings; bearing temperature should not be above 200 degrees F	O	M			E		
NOTES Operators are required to manually check the temperature of motor bearings daily. Mechanical Maintenance Personnel are required to check the temperature of motor bearings with a temperature sensing device, as recommended by the motor manufacturer weekly.							
LUBRICATION							
• Lubricate pump bearings			M				
• Drain lubricant, wash out oil wells and bearings with kerosene. Refill with lubricant according to manufacturer's recommendation				M			
• Lubricate bearings of coupling and motor through grease fittings in accordance with manufacturer's recommended procedure. Do not over-lubricate			E				

SLUDGE PUMPING STATIONS NO.1-5 (022, 023, 024, 062 and 063)
VENTURI METERS
023-036-01-0000 THROUGH 023-036-02-0000

MAINTENANCE TASK	FREQUENCY						
	D	W	M	Q	SA	A	O
METER							
• Check for leaks on all connections	O						
• Check the pump output pressure. Adjust if necessary					I		
NOTE Pump output pressure should be 10-15 psi higher than the maximum line pressure.							
• Check the pressure sensor balance and operation as recommended by manufacturer					I		
• Clean the pressure sensor orifices and nozzles with the cleaning pins or by flushing if required					I		
• Check the output at zero flow as recommended by manufacturer					I		
• Refer to manufacturer's literature for trouble-shooing procedures							I
• For detailed maintenance procedures of instrumentation equipment refer to manufacturer's literature							I
TRANSMITTER							
• Check for leak of mercury on all connections	O						
• Check calibration and operation as recommended by manufacturer					I		
• Check zero adjustment					I		
LUBRICATION							
• Check the oil level in the pump reservoir and refill if required			O				
, Lubricate motor through the two rubber hoods. Use only a few drops of machine oil					E		

SLUDGE PUMPING STATIONS NO.1-5 (022, 023, 024, 062 and 063)
VENTILATION EQUIPMENT
022-048-01-0000 THROUGH 024-048-02-0000

MAINTENANCE TASK	FREQUENCY						
	D	W	M	Q	SA	A	O
CABINET SUPPLY FAN							
• Clean and inspect the fan, fan shaft and the internal parts of cabinet. Remove any rust on the fan shaft with emery cloth and recoat						M	
• Clean the air filter; replace if necessary					M		
• Check proper tension of fan belt					M		
• Check for worn or damaged fan belt; replace if necessary					M		
• Inspect the mixing box damper rod linkage, setscrews and blade adjustment					M		
• Check the fan wheel; replace if necessary					M		
• Check for unusual noise and excessive vibration		O					
LUBRICATION							
• Lubricate fan bearings through grease fittings					M		
• Lubricate fan motor; follow manufacturer's instruction					E		

SLUDGE PUMPING STATIONS NO.1-5 (022, 023, 024, 062 and 063)
VENTILATION EQUIPMENT (Continue)
022-048-03-0000 THROUGH 024-048-03-0000

MAINTENANCE TASK	FREQUENCY						
	D	W	M	Q	SA	A	O
DIRECT DRIVE SUPPLY FAN							
• Check for unusual noise and vibration. If noise develops, check the fan for worn bearings, proper installation and anchoring and for adequate clearance of rotating members							M
LUBRICATION							
• Lubricate fan shaft ball bearings. Add grease with the fan running					M		
NOTE Use low pressure grease gun only.							
• Lubricate motor bearings. Apply grease while motor is running. Do not over-grease					E		

SLUDGE PUMPING STATIONS NO.1-5 (022, 023, 024, 062 and 063)
VENTILATION EQUIPMENT (Continue)
062-048-01-0000 AND 063-048-02-0000

MAINTENANCE TASK	FREQUENCY						
	D	W	M	Q	SA	A	O
SUPPLY FAN							
• Check for unusual noise and vibration. If noises develop, check the fan for worn bearings, proper installation and anchoring and for adequate clearance of rotating members							M
LUBRICATION							
• Lubricate fan shaft ball bearings. Add grease with the fan running					M		
NOTE Use low pressure grease gun only.							
• Lubricate motor bearings. Apply grease while motor is running. Do not over grease					E		

SLUDGE PUMPING STATIONS NO.1-5 (022, 023, 024, 062 and 063)
OVERHEAD ROLLING DOOR
062-176-01-0000 AND 063-176-01-0000

MAINTENANCE TASK	FREQUENCY						
	D	W	M	Q	SA	A	O
ROLLING DOOR							
• Inspect visually for cleanliness and ease of operation			O				
• Check guides, guide mouths, curtain and hood for wear or damage							M
• Clean accumulated grease and dirt from guides and debris from bottom of guides							M
• Adjust brake when operating stroke has increased to 7/8-inch							M
• Replace worn brake lining							M
• Clean dust, grease and moisture from magnetic reversing switch.							M
• Refer to manufacturer's literature for trouble-shooting procedures							M
LUBRICATION							
• Lubricate hoist shaft and gears			M				
• Lubricate motor according to manufacturer's recommendation			E				
• Change oil in gear box						M	
• Lubricate chain and guides							M

SLUDGE PUMPING STATIONS NO.1-5 (022, 023, 024, 062 and 063)
WASTE SLUDGE PUMPING EQUIPMENT
023-316-01-0000 THROUGH 023-316-03-0000

MAINTENANCE TASK	FREQUENCY						
	D	W	M	Q	SA	A	O
WASTE SLUDGE PUMPING EQUIPMENT							
• Check for unusual noise and excessive vibration; refer to manufacturer's literature for cause and corrective action	O						
• Check temperature of seal box. If overheating, seal may not be receiving adequate seal water flow; may require adjustment or replacement of components			M				
• Check operating temperature of motor bearings; bearing temperature should not be above 200 degrees F	O	M					
NOTES Operators are required to manually check the temperature of motor bearings daily. Mechanical Maintenance Personnel are required to check the temperature of motor bearings with a temperature sensing device, as recommended by the motor manufacturer weekly.							
• Check packing, all gaskets and "O" rings; replace if necessary						M	
• Clean motor. Use mineral spirit			E				
• Check alignment of pump, drive motor and gear reducer					M		
• Check water seal piping for damage and tightness					M		
• Refer to manufacturer's literature for trouble-shooting procedures	O						
LUBRICATION							
• Check for adequate supply of bearing lubricating oil in all reservoirs and refill as necessary				M			
• Inspect bearing oil for contamination with water or sludge. If necessary, drain old oil from the bearing housing, wash the bearing shaft assembly with clean benzene and refill. Add a few drops of oil to bearing seals before remounting assembly							E
• Lubricate motor bearings in accordance with manufacturer's recommendation. Do not over grease	O						

ACCESS BUILDING AND PIPE TUNNEL
SUMP PUMP
045-008-01-0000

MAINTENANCE TASK	FREQUENCY						
	D	W	M	Q	SA	A	O
SUMP PUMP							
• Check operating temperature of motor bearings; bearing temperature should not be above 200 degrees F.	O	M					
NOTE Operators are required to manually check the temperature of motor bearings daily. Mechanical Maintenance Personnel are required to check the temperature of motor bearings with a temperature sensing device, as recommended by the motor manufacturer weekly.							
• Check for unusual noise and excessive vibration; refer to manufacturer's literature for cause and corrective action	O						
• Check impeller clearance; adjust as required.					M		
• Check coupling for wear and replace if necessary.					M		
• Check for misalignment of coupling and shaft.					M		
• Check water lubrication line for damage and tightness.					M		
• Refer to manufacturer's literature for trouble-shooting procedures.							M
LUBRICATION							
• Check oil level in reservoir for intermediate bearing; replenish	O						
• Lubricate thrust bearings in motor bracket as recommended by the manufacturer.			E				

ACCESS BUILDING AND PIPE TUNNEL
SUPPLY FAN
045-048-01-0000

MAINTENANCE TASK	FREQUENCY						
	D	W	M	Q	SA	A	0
SUPPLY FAN							
• Check for unusual noise and excessive vibration. If noises develop, check the fan for worn bearings, proper installation and anchoring and for adequate clearance of rotating members							M
• Check condition of V-belt; replace if necessary					M		
• Check V-belt tension. If adjustment is made, check pulley alignment					M		
LUBRICATION							
• Lubricate fan bearings. Admit grease slowly until it shows up at seals. Do not over lubricate					M		
NOTE Use low pressure grease gun only.							
• Lubricate motor bearings according to the manufacturer's recommendation. Do not over lubricate							E

OVERFLOW STRUCTURE (018)
SLUICE GATES
018-012-01-0000 AND 018-012-02-0000

MAINTENANCE TASK	FREQUENCY						
	D	W	M	Q	SA	A	O
SLUICE GATE							
• Clean stem			O				
NOTE The frequency for cleaning the sluice gate stem applies to new equipment. The actual required cleaning frequency will be determined based on use of equipment.							
• Clean gate guide groove and stem guide of any foreign matter							O
• Check gate guide groove and stem guide for proper alignment and bolts for tightness						M	
• Check wedge attaching studs and locknuts for proper tightness. Adjust if required.						M	
ELECTRIC OPERATOR							
• Clean geared limit and torque switch contact. Use mineral spirits on lint-free cloth					E		
• Check limit switch gear box for damage; replace if necessary					E		
• Check wiring and push button contacts					E		
• Refer to manufacturer's literature for trouble-shooting procedures							E
LUBRICATION							
• Lubrication drive sleeve top bearing			M				
• Lubricate threaded portion of stem			M				
• Check condition of lubricant					M		

OVERFLOW STRUCTURE (018)
TIDE GATE
018-094-01-0000

MAINTENANCE TASK	FREQUENCY						
	D	W	M	Q	SA	A	O
TIDE GATE							
LUBRICATION							
• Lubricate flap valve through fittings provided on the valve						M	

MAIN PUMPING STATION (010)
SUMP PUMPS
010-008-01-0000 AND 010-008-02-0000

MAINTENANCE TASK	FREQUENCY						
	D	W	M	Q	SA	A	O
SUMP PUMP							
• Check operating temperature of motor bearings; bearing temperature should not be above 200 degrees F	O	M					
NOTES Operators are required to manually check the temperature of motor bearings daily. Mechanical Maintenance Personnel are required to check the temperature of motor bearings with a temperature sensing device as recommended by the motor manufacturer weekly.							
• Check for unusual noise and excessive vibration; refer to manufacturer's literature for cause and corrective action	O						
• Check impeller clearance; adjust as required					M		
• Check coupling for wear and replace if necessary					M		
• Check for misalignment of coupling and shaft					M		
• Check water lubrication line for damage and tightness					M		
• Refer to manufacturer's literature for trouble-shooting procedures							M
LUBRICATION							
• Check oil level in reservoir for intermediate bearings; replenish	O						
• Lubricate thrust bearings in motor bracket as recommended by the manufacturer			E				

MAIN PUMPING STATION (010)
HOISTING EQUIPMENT
010-009-01-0000

MAINTENANCE TASK	FREQUENCY						
	D	W	M	Q	SA	A	O
OVERHEAD CRANE - GENERAL							
• Check all functional operating mechanisms for any maladjustments that may interfere with proper operation			M				
• Check that warning labels, push button markings or capacity markings have not been removed or are illegible					M		
• Check bolts, nuts and rivets for tightness					M		
• Check pins, bearings, shafts and gears for excessive wear, cracks, distortion and corrosion; replace defective parts					M		
• Check brake system for excessive wear and drift						M	
• Check electrical contactors, limit switches and push buttons for pitting, loose wires, deterioration and contact wear						E	
• For detailed maintenance procedures, refer to manufacturer's literature							M
HOOKS							
• Check for deformation and chemical damage			M				
• Check throat openings; replace if bent from normal opening			M				
• Check for twists of hook eye or hook; replace if twisted			M				
• Check if hook eye or hook is bent; replace if bent			M				
• check for hinge action wear at point of contact and elongation of hook eye			M				
LOAD BEARING S.S. CABLE							
• Check load bearing cable for wear, twist, distortion, kinks, strand breaks, improper dead ending; replace cable if conditions described above are excessive			M				
LUBRICATION							
• Check gear oil; maintain level at oil bath			M				
• Lubricate bearings through a grease fitting					M		

MAIN PUMPING STATION (010)
SLUICE GATES
010-012-01-0000 THROUGH 010-012-10-0000

MAINTENANCE TASK	FREQUENCY						
	D	W	M	Q	SA	A	O
SLUICE GATE							
• Clean stem			O				
NOTE The frequency for cleaning the sluice gate stem applies to new equipment. The actual required cleaning frequency will be determined based on use of equipment.							
• Clean gate guide groove and stem guide of any foreign matter							O
• Check gate guide groove and stem guide for proper alignment and bolts for tightness						M	
• Check wedge attaching studs and locknuts for proper tightness. Adjust if required						M	
ELECTRIC OPERATOR							
• Clean geared limit and torque switch contact. Use mineral spirits on lint-free cloth					E		
• Check limit switch gear box for damage; replace if necessary					E		
• Check wiring and push button contacts					E		
• Refer to manufacturer's literature for trouble-shooting procedures							E
LUBRICATION							
• Lubricate drive sleeve top bearing			M				
• Lubricate threaded portion of stem			M				
• Check condition of lubricant					M		

MAIN PUMPING STATION (010)
MAIN SEWAGE PUMPS
010-015-01-0000 THROUGH 010-015-07-0000

MAINTENANCE TASK	FREQUENCY						
	D	W	M	Q	SA	A	O
SEWAGE PUMP							
• Check bearing temperature; bearing temperature should not be above 200 degrees F	O	M					
NOTES Operators are required to manually check the temperature of bearings daily. Mechanical Maintenance Personnel are required to check the temperature of bearings with a temperature sensing device, as recommended by the manufacturer weekly.							
• Check stuffing box for proper leakage rate. Adjust seal water pressure. Adjust the packing by tightening the gland evenly	O						
• Clean bearing housing and bearings. Use kerosene or mineral spirits						M	
• Check for unusual noise and excessive vibration	O						
• Check for misalignment of coupling and shaft						M	
• Check packing and replace if necessary. Be sure the lantern ring is in its proper position at the entrance of the seal water in the stuffing box					M		
• Check shaft and shaft sleeve for scoring					M		
• Clean the impeller and casing from deposits and scale						M	
• Refer to manufacturer's literature for trouble-shooting procedures							M
MOTOR							
• Check for excessive vibration, unusual noise and temperature	O						
• Check temperature of motor with thermometer, thermocouple or by resistance. For rated temperature rise, check the motor nameplate			E				
• Drain accumulated moisture							E
• Test insulation resistance of motor winding. Refer to manufacturer's literature for instruction						E	

MAIN PUMPING STATION (010)
MAIN SEWAGE PUMPS
010-015-01-0000 THROUGH 010-015-07-0000

MAINTENANCE TASK	FREQUENCY						
	D	W	M	Q	SA	A	O
MOTOR (Continued)							
• Clean the motor inside and outside. Use mineral spirits			E				
EDDY-CURRENT							
• Clean unit using compressed air to remove dust and mineral spirits to remove grease and other adherent substances						E	
• Remove filters from clutch housing and flush with cleaning solvent						E	
• Check slip rings and brushes; if slip rings become pitted or worn, replace. If brushes become so short that they bind the brush holder, replace			E				
• Clean slip rings with canvas or other hard-woven non-linting material. Do not use any lubricant			E				
LUBRICANT							
• Lubricate pump bearings. Do not over grease	M						
• Check the quality of the lubricant in the pump bearing. Drain, flush and relubricate if required					M		
• Lubricate motor bearings in accordance with manufacturer's recommendation. Do not over grease					E		
• Lubricate bearings of coupling through grease fittings in accordance with manufacturer's recommended procedure. Do not over lubricate			E				

MAIN PUMPING STATION (010)
SCUM TRANSFER PUMPS
010-016-01-0000 AND 010-016-02-0000

MAINTENANCE TASK	FREQUENCY						
	D	W	M	Q	SA	A	O
SCUM TRANSFER PUMP							
• Check for excessive noise. Refer to manufacturer's literature for corrective action	O						
• Check alignment of pump and motor						M	
• Clean pump from dust; in particular around bearings. Use clean wiper cloth						M	
• Check water seal piping for damage and tightness					M		
• Refer to manufacturer's literature for trouble-shooting procedures							M
LUBRICATION							
• Lubricate pump bearings. Do not over grease			M				
• Inspect bearing grease for contamination with water or sludge. If necessary, drain old grease fro the bearing housing, wash the bearing shaft assembly with clean benzine and refill. Add a few drops of oil to bearing seals before remounting assembly				M			
• Lubricate motor bearings in accordance with manufacturer's recommendation. Do not over grease							E

MAIN PUMPING STATION (010)
DEWATERING PUMP
010-017-01-0000

MAINTENANCE TASK	FREQUENCY						
	D	W	M	Q	SA	A	O
DEWATERING PUMP							
• Check for unusual noise and vibration	O						
• Check packing and replace if necessary. Be sure the lantern ring is centered in the stuffing box at the entrance of the water seal piping connection					M		
• Check temperature of stuffing box, if overheating, packing may be too tight and is not allowing leakage of flushing water			M				
• Check operating temperature of motor bearings; bearing temperature should not be above 200 degrees F	O	M					
NOTES Operators are required to manually check the temperature of motor bearings daily. Mechanical Maintenance Personnel are required to check the temperature of motor bearings with a temperature sensing device as recommended by the motor manufacturer weekly.							
• Check shaft or shaft sleeve for scoring; scoring accelerates packing wear					M		
• Check alignment of pump and motor; shim up unit if necessary; if misalignment occurs frequently, inspect he entire piping system; unbolt piping at suction and discharge flanges to see if it springs away indicating strain in casing; inspect all pipe supports for soundness and effective support of load					M		
• Check the drive belt for excessive wear; replace if necessary					M		
• Check parts of motion control variable speed sheave for wear or damage. Replace if necessary							E
• Clean motor. Use mineral spirits			E				
• Refer to manufacturer's literature for trouble-shooting procedures							M

MAIN PUMPING STATION (010)
DEWATERING PUMP
010-017-01-0000

MAINTENANCE TASK	FREQUENCY						
	D	W	M	Q	SA	A	O
LUBRICATION							
• Check oil level in ball bearing reservoir; keep filled to sight glass level; do not overfill	O						
• Check oil level and refill the reservoir of motion control variable speed sheave		E					
• Lubricate motor bearings in accordance with manufacturer recommendation. Do not over grease					E		

MAIN PUMPING STATION (010)
PROCESS AIR BLOWERS
010-018-01-0000 THROUGH 010-018-03-0000

MAINTENANCE TASK	FREQUENCY						
	D	W	M	Q	SA	A	O
AIR BLOWER							
• Check for unusual noise and excessive vibration; refer to manufacturer's literature for possible cause and corrective action	O						
• Check bearing temperature; bearing temperature should be less than 190 degrees F	O	M					
NOTES Operators are required to manually check the temperature of blower bearings daily. Mechanical Maintenance Personnel are required to check the temperature of blower bearings with a temperature sensing device, as recommended by the manufacturer weekly.							
• Check coupling for alignment and wear					M		
• Refer to manufacturer's literature for trouble-shooting procedures							M
• Check alignment of motor and driven shaft					M		
• Clean process air filter with water or compressed air							M
NOTE Do not clean in gasoline or other petroleum solvent.							
MOTOR							
• Inspect for cleanliness, moisture, overloading, temperature and vibration	O						
• Test insulation resistance of motor winding. Refer to manufacturer's literature for instructions						E	
• Check bearing temperature. Bearing temperature should be less than 200 degrees F	O	M					

MAIN PUMPING STATION (010)
PROCESS AIR BLOWERS
010-018-01-0000 THROUGH 010-018-03-0000

MAINTENANCE TASK	FREQUENCY						
	D	W	M	Q	SA	A	O
NOTES							
Operators are required to manually check the temperature of blower bearings daily.							
Mechanical Maintenance Personnel are required to check the temperature of motor bearing with a temperature sensing device, as recommended by the motor manufacturer weekly.							
• Refer to manufacturer's literature for trouble-shooting procedures							E
LUBRICATION							
• Check oil level; keep filled to sight glass level; do not overfill	O						
• Drain and replace the bearing oil					M		
• Lubricate coupling in accordance with the manufacturer's instructions					M		
• Lubricate motor bearings in accordance with manufacturer recommendation. Do not over grease					E		

MAIN PUMPING STATION (010)
PLANT AIR SYSTEM - AIR COMPRESSORS
010-020-01-0000 THROUGH 010-020-03-0000

MAINTENANCE TASK	FREQUENCY						
	D	W	M	Q	SA	A	O
AIR COMPRESSORS							
• Perform overall visual inspection for loose bolts, connections and wiring; note leaks	O						
• Check the entire system for unusual noise or excessive vibration	O						
• Check the entire installation for air leaks		O					
• Clean the unit by wiping it down	O						
• Check foundation bolts tightness						M	
• Check sheave alignment							M
• Check for proper belt tension. Adjust if necessary							M
• Drain accumulated moisture from the strainer; drain all condensate traps	O						
• Inspect and clean if necessary, crankcase breather					M		
• Clean oil strainer; use nonflammable cleaning solvent						M	
• Drain and clean filter shell; install new oil filter element and add one quart oil at shell					M		
• Inspect piston ring for wear and free movement						M	
• Check piston rod packing for leaks			M				
• Inspect oil scraper rings for leakage. Replace if necessary			M				
• Inspect cylinder liner for scoring. Replace if necessary, and install new gaskets					M		
• Inspect air intake filter; clean if necessary			M				
• Check cooling water temperature	O						
• Check for proper circulation of cooling water; clean clogged passages if required			M				

MAIN PUMPING STATION (010)
PLANT AIR SYSTEM - AIR COMPRESSORS
010-020-01-0000 THROUGH 010-020-03-0000

MAINTENANCE TASK	FREQUENCY						
	D	W	M	Q	SA	A	O
• Inspection condition of jacket						M	
• Check all safety devices for proper operation					I		
• Inspect pressure switches					E		
• Inspect all valves. Replace faulty parts					M		
• Clean solenoid valves, when leakage occurred. Inspect and replace worn or damaged parts							M
• Clean motor. Use mineral spirits					E		
• Refer to manufacturer's literature for trouble-shooting procedures and for repair procedures							M
NOTE All air pressure must be relieved from compression cylinder before making repairs.							
LUBRICATION							
• Check oil level; keep filled to oil level sight glass of crankcase	O						
• Check oil pressure; normal operating pressure should be 25 to 35 psi	O						
• Change crankcase oil					M		
• Lubricate electric motor in accordance with manufacturer recommendation							E

MAIN PUMPING STATION (010)
STANDBY GENERATOR STARTING AIR COMPRESSOR
010-020-04-0000 AND 010-020-05-0000

MAINTENANCE TASK	FREQUENCY						
	D	W	M	Q	SA	A	O
AIR COMPRESSOR							
• Check for unusual noise and excessive vibration	O						
• Inspect for water, air or oil leak	O						
• Drain condensate	O						
• Clean and inspect for wear the crank case breather					M		
• Clean air filter			M				
NOTE Wash filter element in kerosene or hot water with solvent. Do not use gasoline or other explosive mixture.							
• Check air filter for leak and damage			M				
• Inspect water jackets			M				
• Check water tubes of intercooler for mineral deposits					M		
• Inspect and clean suction and discharge valves. Replace worn or leaking valve				M			
• Drain and clean oil filter					M		
• Refer to manufacturer's literature for trouble-shooting procedures							M
REMOTE RADIATOR							
• Clean outside fin surfaces			M				
NOTE Use compressed air of greaseless solvent.			M				
• Check the locknuts and screws of all moving parts for tightness		M					
• Check operating temperature of bearings with thermometer. The temperature should be around 130 degrees F			M				
• Check the belt tension. Adjust if necessary			M				

MAIN PUMPING STATION (010)
STANDBY GENERATOR STARTING AIR COMPRESSOR
010-020-04-0000 AND 010-020-05-0000

MAINTENANCE TASK	FREQUENCY						
	D	W	M	Q	SA	A	O
FLEXIBLE DIAPHRAGM COUPLING							
• Inspect for loose nuts, bolts, keys and hubs					M		
• Check alignment					M		
• Check the diaphragm for rust and corrosion				M			
PRESSURE REGULATOR							
• Inspect the seating surface of the valve plug and the seating edge of the orifice for damage. Replace if necessary					M		
• Remove the diaphragm and examine for damage. Replace if damage is noted.						M	
NOTE Before disassembling the regulator, isolate it from the pressure system and release all pressure.							
LIQUID FILTER							
• Replace filter element. Refer to manufacturer's literature for procedure				M			
• Check air eliminator for damage and proper function. Replace faulty parts						M	
• Drain accumulated sediment	O						
FLUID-GARD FILTER							
• Check unit for leaks and damage. Replace faulty parts						M	
• Replace filter cartridge, Refer to manufacturer's literature for procedure						M	
• Open vent cock and drain plug.	O						

MAIN PUMPING STATION (010)
STANDBY GENERATOR STARTING AIR COMPRESSOR
010-020-04-0000 AND 010-020-05-0000

MAINTENANCE TASK	FREQUENCY						
	D	W	M	Q	SA	A	O
LUBRICATION							
• Check oil pressure and level	O						
• Change lubricating oil				M			

MAIN PUMPING STATION (010)
PLANT WATER PUMPS
010-022-01-0000 AND 010-022-02-0000

MAINTENANCE TASK	FREQUENCY						
	D	W	M	Q	SA	A	O
PLANT WATER PUMP							
• Check for unusual noise and excessive vibration	O						
• Check operating temperature of bearings. Bearing temperature should not be above 200 degrees F	O	M					
NOTES Operators are required to manually check the temperature of bearings daily. Mechanical Maintenance Personnel are required to check the temperature of bearings with a temperature sensing device, as recommended by the manufacturer weekly.							
• Check for misalignment of coupling and shaft					M		
• Clean bearings of dirt and deteriorated lubricants					M		
LUBRICATION							
• Lubricate bearings. Do not over grease					M		
• Lubricate electric motor in accordance with manufacturer recommendation					E		

MAIN PUMPING STATION (010)
SEWAGE SAMPLING EQUIPMENT
010-032-01-0000

MAINTENANCE TASK	FREQUENCY						
	D	W	M	Q	SA	A	O
SAMPLE PUMP							
• Perform overall visual inspection						M	
• Check guide vane seal ring; replace if necessary						M	
NOTE							
Do not start unit until pump is filled with water.							
• Refer to manufacturer's literature for trouble-shooting procedures							M
LUBRICATION							
• Lubricate motor; refer to manufacturer's instruction			E				

MAIN PUMPING STATION (010)
PROCESS AIR METER
010-036-01-0000

MAINTENANCE TASK	FREQUENCY						
	D	W	M	Q	SA	A	O
PROCESS AIR METER							
• Check for leak on all connections	O						
• Check the pressure sensor balance and operation as recommended by manufacturer					I		
• Check the zero adjustment and test head signal of transmitter					I		
• Check the calibration and operation of transmitter as recommended by manufacturer					I		
• Refer to manufacturer's literature for trouble-shooting and detailed maintenance procedures							I

MAIN PUMPING STATION (010)
SEWAGE SAMPLER STATION
010-042-01-0000

MAINTENANCE TASK	FREQUENCY						
	D	W	M	Q	SA	A	O
SEWAGE SAMPLER STATION							
• Wipe down interior and exterior of the refrigerator when the sample containers are removed	O						
• Check visually air pressure and adequate reservoir flow	O						
• Check visually one or two sampling cycles for proper operation of the sampler	O						
• Check visually oil level and air filter lubricator		O					
• Clean sample funnel, tube and sample cup		O					
• Clean reservoir		O					
• Defrost refrigerator and check operating temperature			O				
• Remove and empty lubricator, clean glass and refill with oil to the proper level			O				
• Clean filter bowl. Use drain valve		O					
• Clean filter parts with methanol			O				
NOTE Never use carbon tetrachloride, trichlorethylene, thinner, acetone or similar objects.							
• Check diaphragm; replace if swollen or stiff					M		
• Check disc assembly; replace if it is worn or knicked					M		
• Check operating speeds of sampling arms. Adjust if necessary			O				
• Check solenoid valve					M		

MAIN PUMPING STATION (010)
COMBUSTIBLE GAS DETECTION SYSTEM
010-044-01-0000

MAINTENANCE TASK	FREQUENCY						
	D	W	M	Q	SA	A	O
COMBUSTIBLE GAS DETECTION EQUIPMENT							
• Test and adjust alarm with warning points in accordance with the manufacturer's recommendation						I	
• Check alarm circuit						I	
• Check the calibration							

MAIN PUMPING STATION (010)
HVAC EQUIPMENT
010-048-01-0000 THROUGH 010-048-08-0000

MAINTENANCE TASK	FREQUENCY						
	D	W	M	Q	SA	A	O
V-BELT DRIVE SUPPLY FAN							
• Check for unusual noise and excessive vibration. If noises develop, check the fan for worn bearings, proper installation and anchoring and for adequate clearance of rotating members							M
• Check condition of V-Belt; replace if necessary					M		
• Check V-belt tension. If adjustment is made, check pulley alignment					M		
LUBRICATION							
• Lubricate fan shaft ball bearings. Add grease with the fan running					M		
NOTE Use low pressure grease gun only.							
• Lubricate motor bearings. Apply grease while motor is running. Do not over grease					E		

MAIN PUMPING STATION (010)
HVAC EQUIPMENT
010-049-01-0000 THROUGH 010-049-03-0000

MAINTENANCE TASK	FREQUENCY						
	D	W	M	Q	SA	A	O
RETURN FAN							
• Check for unusual noise and excessive vibration		O					
• Clean and inspect the fan, fan shaft ant the internal parts of cabinet. Remove any rust on the fan shaft with emery cloth and recoat						M	
• Clean the air filter, replace if necessary					M		
• Check for proper tension on fan belt					M		
• Check for worn or damaged fan belt, replace if necessary					M		
• Inspect the mixing box damper, rod linkage, setscrews and blade adjustment					M		
• Check the fan wheel; replace if necessary					M		
LUBRICATION							
• Lubricate fan bearings, through grease fittings					M		
• Lubricate fan motor; follow manufacturer's instructions					E		

MAIN PUMPING STATION (010)
HVAC EQUIPMENT
010-050-01-0000 AND 010-050-02-0000

MAINTENANCE TASK	FREQUENCY						
	D	W	M	Q	SA	A	O
ROOF EXHAUST FAN							
• Check for unusual noise and excessive vibration. If noises develop, check the fan for worn bearings, proper installation and anchoring and for adequate clearance of rotating members						M	
• Check condition of V-belt; replace if necessary					M		
• Check V-belt tension. If adjustment is made, check pulley alignment					M		
LUBRICATION							
• Lubricate fan shaft ball bearings. Add grease with the fan running					M		
NOTE Use low pressure grease gun only.							
• Lubricate motor bearings, Apply grease while motor is running. Do not over grease.							

MAIN PUMPING STATION (010)
HVAC EQUIPMENT
010-051-01-0000 THROUGH 010-051-03-0000

MAINTENANCE TASK	FREQUENCY						
	D	W	M	Q	SA	A	O
AIR CONDITIONING UNIT - GENERAL							
• Inspect air filter and clean. Replace when filter bank manometer indicates the changeout pressure drop has been reached			M				
• Inspect unit coils and humidifier. Clean if necessary					M		
• Inspect unit casing and accessories for paint chipping or corrosion. If damage is found, clean and repaint						M	
• Clean fan wheels and fan shaft. If rust is found on the fan shaft, remove with emery cloth and recoat						M	
• Check condensate drain line and drain pan for sludge or other foreign material						M	
• Check damper linkage, setscrews and blade adjustment for proper operation						M	
• Refer to manufacturer's literature for trouble-shooting procedures							M
FAN BEARINGS							
• If noises develop, check all bearings races and locking devices for tightness, check the fan for worn bearings and for adequate clearance of rotating members					M		
SPRAYED COIL CLIMATE CHANGERS							
• Clean the spray tank and the spray pump return line strainer						M	
• Clean spray nozzles						M	
• Check spray nozzles for erosion. Replace if necessary						M	
• Check the spray float valve and pump pressure. Adjust if necessary, the float so that the water level is 1/2-inch below the overflow pipe						M	
• Check water sump for corrosive or scaling conditions			M				

MAIN PUMPING STATION (010)
HVAC EQUIPMENT
010-051-01-0000 THROUGH 010-051-03-0000

MAINTENANCE TASK	FREQUENCY						
	D	W	M	Q	SA	A	O
FAN MOTOR AND V-BELTS							
• Check for excessive vibration and high temperature			O				
• Check fan belt tension. Adjust if necessary					M		
• Inspect fan belt. Replace if broken or frayed					M		
• Check alignment of fan and motor sheaves. Adjust if necessary					M		
• Inspect electric heat climate changers junction box and control panel. Tighten any loose connections					E		
LUBRICATION							
• Lubricate fan bearings. Do not over lubricate. Add grease only while fan is operating					M		
• Lubricate motor in accordance with manufacturer instruction					E		
NOTE Do not use lubricants containing detergents.							

MAIN PUMPING STATION (010)
HVAC EQUIPMENT
010-052-01-0000

MAINTENANCE TASK	FREQUENCY						
	D	W	M	Q	SA	A	O
WATER CHILLER UNIT							
• Check flow of refrigerant through sight glass. If gas bubbles appear, check the system for leaks. Make repairs and add refrigerant		O					
• Clean condenser tubes. Refer to manufacturer's literature for recommended cleaning procedure						M	
• Inspect the entire system for unusual noise vibration		O					
• Clean drain and water strainer						M	
• Inspect all air handling equipment. Replace worn of frayed belts, if necessary						M	
• Inspect contracts of the motor starter and controls						E	
• Check calibration and setting and function of control device. Refer to manufacturer's literature for procedure						I	
• Inspect chiller, filter-dryer, solenoid and expansion valves, low side piping and compressor for damage. Repair or replace faulty parts						M	
• Test the entire chiller water circuit for leaks. Repair if necessary						M	
• Clean the condenser to be free of scale and sludge. Refer to manufacturer's literature for mechanical or chemical cleaning procedures			M				
• Charge the system with refrigerant							M
• Refer to manufacturer's literature for trouble-shooting procedures							M
LUBRICATION							
• Check oil level in the compressor. Replenish		O					
• Check oil pressure. Pressure should be 60 to 70 psi above the suction pressure		O					
• Lubricate each motor in the system in accordance with the manufacturer's recommendation			E				

MAIN PUMPING STATION (010)
HVAC EQUIPMENT
010-053-01-0000

MAINTENANCE TASK	FREQUENCY						
	D	W	M	Q	SA	A	O
CHILLED WATER PUMP							
• Clean bearings if dirty and deteriorated lubricants. Use heated light oil. Wipe bearing housing with rag soaked in diesel fuel or kerosene					M		
LUBRICATION							
• Lubricate bearings. Do not over lubricate			M				
NOTE Do not use grease with vegetable or animal fan base, containing graphite or other impurities.							
• Lubricate motor bearings in accordance with manufacturer's recommendation							E

MAIN PUMPING STATION (010)
HVAC EQUIPMENT
010-054-01-0000

MAINTENANCE TASK	FREQUENCY						
	D	W	M	Q	SA	A	O
ELECTRIC REHEAT COIL							
• Check heater element and air filter for dirt and foreign matter. Clean					M		
• Inspect all connections for tightness					E		
• Check wire and cable insulation for deterioration					E		

MAIN PUMPING STATION (010)
HVAC EQUIPMENT
010-055-01-0000

MAINTENANCE TASK	FREQUENCY						
	D	W	M	Q	SA	A	O
ELECTRIC STEAM HUMIDIFIER							
• Check humidistat for correct setting. Adjust pressure regulator to maintain 5 psi		O					
• Check for stem discharge			O				
• Check for leaks in stem lines			O				
• Clean drain solenoid valve and drain lines					M		
• Clean or replace filter cartridge					M		
• Replace cylinder if necessary. Refer to manufacturer's literature for replacement procedure					M		

MAIN PUMPING STATION (010)
HVAC EQUIPMENT
010-056-01-0000

MAINTENANCE TASK	FREQUENCY						
	D	W	M	Q	SA	A	O
EXHAUST FAN - GENERAL							
• Check for unusual noise and excessive vibration		O					
• Inspect fan wheels, shafts, housing scroll and side liners for corrosion or abrasive wear. Replace if necessary					M		
• Check all bolts and connections for tightness					M		
• Clean housing, wheels, louvers, inlet and outlet ductwork of dust and dirt					M		
• Check alignment of sheaves and belt tension					M		
• Clean dampers and check for freedom of movement, corrosion and erosion					M		
• Check alignment of all parts					M		
LUBRICATION							
• Lubricate fan bearings					M		
• Lubricate motor bearings according to the manufacturer's recommendation. Do not over lubricate			E				

MAIN PUMPING STATION (010)
ROLL FILTER
010-057-01-0000 THROUGH 010-057-03-0000

MAINTENANCE TASK	FREQUENCY						
	D	W	M	Q	SA	A	O
ROLL FILTER							
• Changer filter media. Refer to manufacturer's literature for procedure of reloading the media							M
• Check timer and pressure control for proper operation				I			
• Clean from dust and dirt accumulation				M			

MAIN PUMPING STATION (010)
OVERHEAD ROLLING DOORS
010-080-01-0000 AND 010-080-02-0000

MAINTENANCE TASK	FREQUENCY						
	D	W	M	Q	SA	A	O
ROLLING DOOR							
• Inspect visually for cleanliness and ease of operation			O				
• Check guides, guide mouths, curtain and hood for wear or damage							M
• Clean accumulated grease and dirt from guides and debris from bottom of guides							M
• Adjust brake when operating stroke has increased to 7/8-inch							M
• Replace worn brake lining							M
• Clean magnetic reversing switch from dust, grease or moisture							M
• Refer to manufacturer's literature for trouble-shooting procedures							M
LUBRICATION							
• Lubricate hoist shaft and gears			M				
• Lubricate motor according to manufacturer's recommendation			E				
• Change oil in gear box						M	
• Lubricate chain and guides							M

MAIN PUMPING STATION (010)
SPENT COOLING WATER RETURN PUMPS
010-326-01-000 AND 010-326-02-0000

MAINTENANCE TASK	FREQUENCY						
	D	W	M	Q	SA	A	O
SPENT COOLING WATER RETURN PUMPS							
• Check for unusual noise and excessive vibration	O						
• Check bearing temperature; bearing temperature should not be above 225 degrees F.	O	M					
NOTES Operators are required to manually check the temperature of bearings daily Mechanical Maintenance Personnel are required to check the temperature of bearings with a temperature sensing device, as recommended by the manufacturer weekly							
• Check mechanical seal for leakage	O						
• Replace mechanical seal if required. Refer to manufacturer's literature for procedure							M
• Check for misalignment of coupling and shaft						M	
• Check shaft and shaft sleeve for scoring						M	
• Check coupling for wear						M	
• Refer to manufacturer's literature for trouble-shooting procedures							M
MOTOR							
• Check for unusual noise, excessive vibration and any other abnormal conditions	O						
• Check for excessive vibration, unusual noise and temperature	O						
• Check terminal connections, assembly screws, bolts and nuts for tightness						E	

MAIN PUMPING STATION (010)
SPENT COOLING WATER RETURN PUMPS
010-326-01-000 AND 010-326-02-0000

MAINTENANCE TASK	FREQUENCY						
	D	W	M	Q	SA	A	O
• Examine starter, switch, fuses and other control		I					
• Test insulation resistance of motor winding. Refer to manufacturer's literature for instruction						E	
• Clean the motor inside and outside. Use dry compressed air for dust and dry dirt and mineral spirits for accumulated sticky dirt and grease		M					
NOTE Do not use gasoline or other inflammable solvents.							
LUBRICATION							
• Check oil level in reservoir for intermediate bearings; replenish	O						
• Replace oil in reservoir					O		
• Lubricate thrust bearings in motor bracket as recommended by the manufacturer			E				

OXYGEN REACTORS (011)
SLUICE GATES
011-012-01-000 THROUGH 011-012-27-000

MAINTENANCE TASK	FREQUENCY						
	D	W	M	Q	SA	A	Q
SLUICE GATE							
• Clean stem			O				
NOTE The frequency for cleaning the sluice gate stem applies to new equipment. The actual required cleaning frequency will be determined based on use of equipment.							
• Clean gate guide groove and stem guide of any foreign matter							O
• Check gate guide groove and stem guide for proper alignment and bolts for tightness						M	
• Check wedge attaching studs and locknuts for proper tightness. Adjust if required						M	
ELECTRIC OPERATOR							
• Clean geared limit and torque switch contact. Use mineral spirits on lint-free cloth					E		
• Check limit switch gear box for damage; replace if necessary					E		
• Check wiring and push button contacts					E		
• Refer to manufacturer's literature for trouble-shooting procedures							E
LUBRICATION							
• Lubricate drive sleeve top bearing			M				
• Lubricate threaded portion of stem			M				
• Check condition of lubricant					M		

OXYGEN REACTORS (011)
FLOW CONTROL GATES
011-013-01-000 THROUGH 011-013-04-000

MAINTENANCE TASK	FREQUENCY						
	D	W	M	Q	SA	A	Q
FLOW CONTROL GATE							
• Clean gate groove and stem guide of any foreign matter.							O
• Clean gate groove and stem guide for proper alignment and check bolts for tightness.						M	
ELECTRIC OPERATOR							
• Clean geared limit and torque switch contact. Use mineral spirits on lint-free cloth					E		
• Check limit switch gear box for damage; replace if necessary					E		
• Check wiring and push button contacts					E		
• Refer to manufacturer's literature for trouble-shooting procedures							E
LUBRICATION							
• Lubricate drive sleeve top bearing			M				
• Lubricate threaded portion of stem			M				
• Check condition of lubricant					M		

OXYGEN REACTORS (011)
RATE CONTROLLER
011-014-01-0000

MAINTENANCE TASK	FREQUENCY						
	D	W	M	Q	SA	A	D
METER							
• Check for leaks on all connections	O						
• Check the pump output pressure. Adjust if necessary					I		
NOTE Pump output pressure should be 10-15 psi higher than the maximum line pressure.							
• Check the pressure sensor balance and operation as recommended by the manufacturer					I		
• Clean the pressure sensor orifices and nozzles with the cleaning pins or by flushing if required					I		
• Check the output at zero flow as recommended by the manufacturer					I		
• Refer to manufacturer's literature for trouble-shooting procedures							I
• For detailed maintenance procedures of instrumentation equipment, refer to the manufacturer's literature							I
TRANSMITTER							
• Check for leak of mercury on all connections	O						
• Check calibration and operation as recommended by the manufacturer					I		
• Check zero adjustment					I		
LUBRICATION							
• Check the oil level in the pump reservoir and refill if required			O				
• Lubricate motor through the two rubber hoods. Use only a few drops of machine oil					E		

OXYGEN REACTORS (011)
RATE CONTROLLERS
011-014-02-0000 THROUGH 011-014-08-0000

MAINTENANCE TASK	FREQUENCY						
	D	W	M	Q	SA	A	Q
RATE CONTROLLER							
• Check for leaks on all connections	O						
• Check the pump output pressure. Adjust if necessary					I		
NOTE Pump output pressure should be 10-15 psi higher than the maximum line pressure.							
• Check the pressure sensor balance and operation as recommended by the manufacturer					I		
• Clean the pressure sensor orifices and nozzles with the cleaning pins or by flushing if required					I		
• Check the output at zero flow as recommended by the manufacturer					I		
• Refer to the manufacturer's literature for trouble-shooting procedures							I
• For detailed maintenance procedures of instrumentation equipment, refer to the manufacturer's literature							I
TRANSMITTER							
• Check the leak of mercury on all connections	O						
• Check calibration and operation as recommended by the manufacturer					I		
• Check zero adjustment					I		
ELECTRIC VALVE OPERATOR							
• Check actuator for proper function					E		
• Inspect motor brushes. Replace if the brush length is less than 3/8-inch						E	
• Inspect change gears					E		
• Refer to the manufacturer's literature for trouble-shooting procedures							E

OXYGEN REACTORS (011)
RATE CONTROLLERS (Continued)
011-014-02-0000 THROUGH 011-014-08-0000

MAINTENANCE TASK	FREQUENCY						
	D	W	M	Q	SA	A	Q
ELECTRONIC CONTROL MODULE							
• Check dead band adjustment in accordance with manufacturer instruction							I
• Refer to the manufacturer's literature for trouble-shooting procedures							I
LUBRICATION							
• Check the oil level in the pump reservoir and refill if required			O				
• Lubricate motor of pump through the two rubber hoods. Use only a few drops of machine oil					E		
• Grease the gear teeth of valve actuator					E		
• Brush grease onto the lead screw of valve actuator					E		

OXYGEN REACTORS (011)
MECHANICAL AERATORS
011-029-01-0000 THROUGH 011-029-24-0000

MAINTENANCE TASK	FREQUENCY						
	D	W	M	Q	SA	A	Q
MECHANICAL AERATOR							
• Check gap and angular alignment of coupling					M		
• Check for worn bearings, seals, O-rings. Replace if necessary in accordance with manufacturer's recommended procedures							M
LUBRICATION							
• Check the oil level in gear drive oil reservoir. Do not overfill			M				
• Change lubricant in gear drive					M		
• Lubricate impeller shaft bearings and gear drive bearings				M			
• Lubricate coupling. Use standard grease gun; fill with grease until an excess appears at the opening on the other side					M		
• Lubricate bearings of motor in accordance with manufacturer's recommended procedure. Do not over lubricate					E		

OXYGEN REACTORS (011)
SAMPLE PUMPS
011-032-01-0000 THROUGH 011-032-06-000

MAINTENANCE TASK	FREQUENCY						
	D	W	M	Q	SA	A	Q
SAMPLE PUMPS							
• Lubricate pump motor					E		
• Check motor amperage draw					E		

OXYGEN REACTORS (011)
AIR METERS
011-036-04-0000 THROUGH 011-036-09-000

MAINTENANCE TASK	FREQUENCY						
	D	W	M	Q	SA	A	Q
ELECTRONIC CONTROL MODULE							
• Check dead band adjustment. Refer to the manufacturer's literature for procedure							I
• For detailed maintenance procedures of instrumentation equipment, refer to the manufacturer's literature							I
TRANSMITTER							
• Check the zero and test head signals					I		
• Check calibration and operation as recommended by the manufacturer					I		
ELECTRIC VALVE OPERATOR							
• Check actuator for proper function					E		
• Inspect motor brushes. Replace if the brush length is less than 3/8-inch						E	
• Inspect change gears					E		
• Refer to the manufacturer's literature for trouble-shooting procedures							E
LUBRICATION							
• Grease the gear teeth of valve operator					E		
• Brush grease onto the lead screw					E		

OXYGEN REACTORS (011)
OXYGEN METERS
011-036-13-0000 THROUGH 011-036-20-0000

MAINTENANCE TASK	FREQUENCY						
	D	W	M	Q	SA	A	Q
FLOW TRANSMITTER							
• Check sensing element and circuit board for damage and proper function. Replace faulty parts if necessary. Refer to the manufacturer's literature for checking and replacement procedures					I		
• Check the zero and range. Adjust if necessary					I		
• Refer to the manufacturer's literature for trouble-shooting procedures							I
PRESSURE AND TEMPERATURE TRANSMITTERS							
• Check the zero and test head signal					I		
• Check calibration and operation as recommended by their manufacturer					I		
ELECTRONIC CONTROL MODULE							
• Check dead band adjustment. Refer to the manufacturer's literature for procedure							I
• For detailed maintenance procedures of instrumentation equipment, refer to the manufacturer's literature							I
ELECTRIC VALVE OPERATOR							
• Check actuator for proper function					E		
• Inspect motor brushes. Replace if the brush length is less than 3/8-inch						E	
• Inspect change gears					E		
• Refer to the manufacturer's literature for trouble-shooting procedures							E
LUBRICATION							
• Grease the gear teeth of valve operator					E		
• Brush grease onto the lead screw					E		

OXYGEN REACTORS (011)
OXYGEN PURITY ANALYZERS
011-043-01-0000 THROUGH 011-043-02-0000

MAINTENANCE TASK	FREQUENCY						
	D	W	M	Q	SA	A	Q
OXYGEN PURITY ANALYZER							
• Drain condensate from filter		O					
• Change the filter element when pressure drop exceeds three (3) times initial pressure drop							I
• Check span, amplifier, and gas zero. Refer to the manufacturer's literature for procedure		I					
• Check the performance of the instrument. Check loop gain, noisy or erratic recorder trace and instability as recommended by the manufacturer					I		
• Inspect circuits for proper function					I		
• Check measuring cell and prefocus lamp for damage. Replace if necessary. Refer to the manufacturer's literature for procedure					I		

OXYGEN REACTORS (011)
DISSOLVED OXYGEN ANALYZERS
011-043-07-0000 THROUGH 011-043-08-000

MAINTENANCE TASK	FREQUENCY						
	D	W	M	Q	SA	A	Q
DISSOLVED OXYGEN ANALYZER							
• Check level of electrolyte in reservoir, replenish			I				
• Change the electrolyte						I	
• Check probe for algae and other growths; clean			I				
• Check for excessive drift of the calibration setting. Recalibrate if required			I				
• Check membrane for damage; replace if necessary; follow procedure recommended by the manufacturer					I		

OXYGEN REACTORS (011)
COMBUSTIBLE GAS DETECTION SENSORS
011-044-01-0000 AND 011-044-02-0000

MAINTENANCE TASK	FREQUENCY						
	D	W	M	Q	SA	A	Q
COMBUSTIBLE GAS DETECTION SYSTEM							
• Test and adjust alarm and warning points in accordance with the manufacturer's recommendation					I		
• Check alarm circuit					I		
• Check the calibration					I		

JUNCTION CHAMBER NO. 2 (006)
SLUICE GATES
006-012-01-0000 AND 006-012-04-0000

MAINTENANCE TASK	FREQUENCY						
	D	W	M	Q	SA	A	O
SLUICE GATE							
• Clean stem			O				
NOTE The frequency for cleaning the sluice gate stem applies to new equipment. The actual required cleaning frequency will be determined based on use of equipment.							
• Clean gate guide groove and stem guide of any foreign matter.							O
• Check gate guide groove and stem guide for proper alignment and bolts for tightness.						M	
• Check wedge attaching studs and locknuts for proper tightness. Adjust if required						M	
ELECTRIC OPERATOR							
• Clean geared limit and torque switch contact. Use mineral spirits on lint-free cloth					E		
• Check limit switch gear box for damage; replace if necessary					E		
• Check wiring and push button contacts					E		
• Refer to manufacturer's literature for trouble-shooting procedures							E
LUBRICATION							
• Lubricate drive sleeve top bearing			M				
• Lubricate threaded portion of stem			M				
• Check condition of lubricant					M		

METER VAULT NO. 2 (007)
SUMP PUMP
007-008-01-0000

MAINTENANCE TASK	FREQUENCY						
	D	W	M	Q	SA	A	O
SUMP PUMP							
• Check operating temperature of motor bearings; bearing temperature should not be above 200 degrees F.	O	M					
NOTE Operators are required to manually check the temperature of motor bearings daily. Mechanical Maintenance Personnel are required to check the temperature of motor bearings with a temperature sensing device, as recommended by the motor manufacturer weekly.							
• Check for unusual noise and excessive vibration; refer to manufacturer's literature for cause and corrective action	O						
• Check impeller clearance; adjust as required.					M		
• Check coupling for wear and replace if necessary.					M		
• Check for misalignment of coupling and shaft.					M		
• Check water lubrication line for damage and tightness.					M		
• Refer to manufacturer's literature for trouble-shooting procedures.							M
LUBRICATION							
• Check oil level in reservoir for intermediate bearing; replenish	O						
• Lubricate thrust bearings in motor bracket as recommended by the manufacturer.			E				

METER VAULT NO. 2 (007)
RATE CONTROLLERS
007-014-01-0000 AND 007-014-04-0000

MAINTENANCE TASK	FREQUENCY						
	D	W	M	Q	SA	A	O
RATE CONTROLLERS - Differential Pressure							
• Check for leaks on all connections.	O						
• Flush DP Transmitter			I				
• Check the output at zero flow as recommended by manufacturer.			I				
• Refer to manufacturer's literature for trouble-shooting procedures.			I				
• For detailed maintenance procedures of instrumentation equipment refer to manufacturer's literature.			I				
TRANSMITTER							
• Check calibration and operation as recommended by manufacturer.					I		
• Check zero adjustment					I		

METER VAULT NO. 2 (007)
VENTILATION EQUIPMENT
007-048-01-0000 AND 007-048-02-0000

MAINTENANCE TASK	FREQUENCY						
	D	W	M	Q	SA	A	O
V-BELT DRIVE SUPPLY FAN							
• If noises develop, check the fan for worn bearings, proper installation and anchoring and for adequate clearance of rotating members							M
• Check condition of V-belt; replace if necessary.					M		
• Check V-belt tension. If adjustment is made, check pulley alignment					M		
LUBRICATION							
• Lubricate fan shaft ball bearings. Add grease with the fan running.					M		
NOTE Use low pressure grease gun only.							
• Lubricate motor bearings. Apply grease while motor is running. Do not over grease					E		

METER VAULT NO. 2 (007)
MAGNETIC FLOW METER
007-014-02-0000

MAINTENANCE TASK	FREQUENCY						
	D	W	M	Q	SA	A	O
RATE CONTROLLER - Magnetic							
• Check for proper operation of metering system. Perform static test of line power, reference and control signal, current output, magnetic drive and coils, ultrasonic generator and metering electrodes.					I		
• Replace metering tube if meter electrode assemblies are corroded or shorted and liner is worn; after reinstallation perform alignment procedure.							I
• Perform dynamic performance check to verify accuracy and proper performance of electronic circuitry of flow converter. If accuracy is not within specified tolerance recalibrate converter.					I		
• For detailed checking and replacement procedures of metering system refer to manufacturer's literature.							I
• Refer to manufacturer's literature for trouble-shooting procedures.							I

INTERMEDIATE PUMPING STATION (013)
HOISTING EQUIPMENT
013-009-01-0000

MAINTENANCE TASK	FREQUENCY						
	D	W	M	Q	SA	A	O
JIB CRANE - GENERAL							
• Check all functional operating mechanisms for any maladjustments that may interfere with proper operation			M				
• Check that warning labels pushbutton markings or capacity markings have not been removed or are illegible					M		
• Check bolts, nuts and rivets for tightness					M		
• Check pins, bearings, shafts and gears for excessive wear, cracks, distortion and corrosion; replace defective parts					M		
• Check brake system for excessive wear and drift						M	
• Check electrical contactors, limit switches and pushbuttons for pitting, loose wires, deterioration and contact wear						E	
• For detailed maintenance procedure refer to manufacturer's literature							M
HOOKS							
• Check for deformation and chemical damage			M				
• Check throat opening; replace if bent from normal opening			M				
• Check for twists of hook eye or hook; replace if twisted			M				
• Check if hook eye or hook is bent; replace if bent			M				
• Check for hinge action wear at point of contact and elongation of hook eye			M				
LOAD BEARING S.S. CABLE							
• Check load bearing cable for wear, twist, distortion, kinks, strand breaks, improper dead ends; replace cable if conditions described above are excessive			M				
LUBRICATION							
• Check gear oil; maintain level at oil bath			M				
• Lubricate bearings through a grease fittings					M		
• Lubricate shafts					M		

INTERMEDIATE PUMPING STATION (013)
INTERMEDIATE SEWAGE PUMPS
013-015-01-0000 THROUGH 013-015-04-0000

MAINTENANCE TASK	FREQUENCY						
	D	W	M	Q	SA	A	O
INTERMEDIATE SEWAGE PUMP							
• Check for unusual noise and excessive vibration	O						
• Check shaft for scoring						M	
• Check for misalignment of coupling and outer column sections						M	
• Inspect propeller. Replace if necessary. Refer to manufacturer's literature for procedure						M	
• Check packing in stuffing box. Replace if necessary. Do not over tighten packing				M			
• Check water lubrication line for leakage and damage	O						
MOTOR							
• Check for excessive vibration, unusual noise and temperature	O						
• Check temperature of motor with thermometer, thermocouple or by resistance. For rated temperature rise check the motor nameplate			E				
• Test insulation resistance of motor winding. Refer to manufacturer's literature instructions						E	
• Drain accumulated moisture							E
• Clean the motor inside and outside, use mineral spirits			E				
• Refer to manufacturer's literature for trouble-shooting procedures							

INTERMEDIATE PUMPING STATION (013)
INTERMEDIATE SEWAGE PUMPS
013-015-01-0000 THROUGH 013-015-04-0000

MAINTENANCE TASK	FREQUENCY						
	D	W	M	Q	SA	A	O
EDDY-CURRENT COUPLING							
• Clean unit using compressed air to remove dust and mineral spirits to remove grease and other adherent substances						E	
• Remove filters from the clutch housing and flush with cleaning solvent						E	
• Check slip rings and brushes; if slip rings become pitted or worn, replace. If brushes become so short that they bind in the brush holder, replace			E				
• Clean slip rings with canvas or other hard-woven, nonlinting material. Do not use any lubricant			E				
LUBRICATION							
• Lubricate bearings of coupling through grease fittings in accordance with manufacturer's recommended procedures. Do not over lubricate			E				
• Lubricate motor bearings in accordance with manufacturer recommendations. Do not over grease				E			

INTERMEDIATE PUMPING STATION (013)
SEWAGE SAMPLING EQUIPMENT
013-032-01-0000

MAINTENANCE TASK	FREQUENCY						
	D	W	M	Q	SA	A	O
SAMPLE PUMP							
• Perform overall visual inspection						M	
• Check guide vane seal ring; replace if necessary						M	
NOTE Do not start unit until pump is filled with water.							
• Refer to manufacturer's literature for trouble-shooting procedures							M
LUBRICATION							
• Lubricate motor; refer to manufacturer's instructions			E				

INTERMEDIATE PUMPING STATION (013)
SEWAGE SAMPLER STATION
013-042-01-0000

MAINTENANCE TASK	FREQUENCY						
	D	W	M	Q	SA	A	O
SEWAGE SAMPLER STATION							
• Wipe down interior and exterior of the refrigerator when the sample containers are removed							O
• Check visually air pressure and adequate reservoir flow	O						
• Check visually one or two sampling cycles for proper operation of the sampler	O						
• Check visually oil level and air filter lubricator		O					
• Clean sample funnel, tube and sample cup		O					
• Clean reservoir		O					
• Defrost refrigerator and check operating temperature			O				
• Remove and empty lubricator, clean glass and refill with oil to the proper level			O				
• Clean filter bowl. Use drain valve		O					
• Clean filter parts with methanol			O				
NOTE Never use carbon tetrachloride, trichlorethylene, thinner, acetone or similar solvents.							
• Check diaphragm; replace if swollen or stiff					M		
• Check disc assembly; replace if it is worn or knicked					M		
• Check operating speeds of sampling arms. Adjust if necessary			O				
• Check solenoid valve					M		

INTERMEDIATE PUMPING STATION (013)
SEWAGE SAMPLER STATION
013-042-01-0000

MAINTENANCE TASK	FREQUENCY						
	D	W	M	Q	SA	A	O
V-BELT DRIVE ROOF EXHAUST FAN							
• Check for unusual noise and excessive vibration. If noises develop, check the fan for worn bearings, proper installation and anchoring and for adequate clearance of rotating members							M
• Check condition of V-belt; replace if necessary					M		
• Check V-belt tension. If adjustment is made, check pulley alignment					M		
LUBRICATION							
• Lubricate fan shaft ball bearings. Add grease with the fan running					M		
NOTE Use low pressure grease gun only							
• Lubricate motor bearings. Apply grease while motor is running. Do not over grease					E		

RAW SEWAGE PUMPING STATION
SUMP PUMP
001-008-01-0000

MAINTENANCE TASK	FREQUENCY						
	D	W	M	Q	SA	A	O
Take amp readings and record					E		
Lubricate bearings					E		
Check on/off switch					E		
Check wiring and controls					E		
Check overall condition of pump					E		
Check pump for noise, vibration, leaks, bindings and temperature					M		
Check impeller for wear					M		
Check shaft					M		
Check stator and upper shaft seal					M		
Check lower mechanical shaft seal and oil					M		
Check pump cable, cable motor entry and grommet					M		
Check chains or cables, shackles and mounting hardware					M		

RAW SEWAGE PUMPING STATION
HOIST
001-009-01-0000

MAINTENANCE TASK	FREQUENCY						
	D	W	M	Q	SA	A	O
Check electrical operation of crane, push buttons and switches					E		

RAW SEWAGE PUMPING STATION
MAIN PUMP
001-015-01-0000 THROUGH 001-015-04-0000

MAINTENANCE TASK	FREQUENCY						
	D	W	M	Q	SA	A	O
Lubricate coupling bearings and fittings per manufacture's specifications					E		
Check motor temperature by thermometer, thermocouple or resist					E		
Check plate for rater temperature							
Lube motor bearing per manufacturer					E		
Test insulation resistance and motor windings per manufacturer's					E		
specifications					E		
Clean motor with mineral spirits							
					E		

RAW SEWAGE PUMPING STATION
AIR COMPRESSOR
001-020-030-0000 AND 001-020-04-0000

MAINTENANCE TASK	FREQUENCY						
	D	W	M	Q	SA	A	O
Check overall condition of unit		O					
Check aftercooler for obstructions and operation		O					
Check and test automatic drain valve operation		O					
Check lubrication oil level and condition. If oil is contaminated by water, drain, flush and refill with correct type oil		O					
Check belt condition and tension		O					
Check air intake filters - blow clean or replace as needed		O					
Clean cooling fins		O					
Check all hardware for tightness		O					
Test run unit		O					
Check pressure switches					E		
Clean motor with mineral spirits					E		
Lubricate motor as required					E		

RAW SEWAGE PUMPING STATION
PLANT WATER PUMP
001-022-01-0000 AND 001-022-02-0000

MAINTENANCE TASK	FREQUENCY						
	D	W	M	Q	SA	A	O
Check general condition of unit					E		
Lubricate motor bearings					E		

RAW SEWAGE PUMPING STATION
JACKET WATER PUMP
001-023-01-0000 AND 001-023-02-0000

MAINTENANCE TASK	FREQUENCY						
	D	W	M	Q	SA	A	O
Check general condition of unit					E		

RAW SEWAGE PUMPING STATION
FLOW METER
001-036-01-0000

MAINTENANCE TASK	FREQUENCY						
	D	W	M	Q	SA	A	O
Perform calibration test per equipment O and M information					I		

RAW SEWAGE PUMPING STATION
PRIMARY TRANSFORMER
001-038-01-0000

MAINTENANCE TASK	FREQUENCY						
	D	W	M	Q	SA	A	O
Clean insulating surface of bushing				E			
Check outside condition of transformer for damage, leaks, rust, etc.				E			
Lubricate all locks, hinges and handles				E			

RAW SEWAGE PUMPING STATION
GAS DETECTION SENSOR
001-044-01-0000

MAINTENANCE TASK	FREQUENCY						
	D	W	M	Q	SA	A	O
Perform calibration procedure as outlined in instruction manual			I				
Verify operation of low and high alarms through the Scada system and annunciator			I				
Check calibration of 4 - 20 MA output			I				
Inspect gas detector unit for damage, replace if unit has been wet			I				
Check horn circuit and alarm			I				

RAW SEWAGE PUMPING STATION
KNIFE VALVE
001-047-01-0000 THROUGH 001-047-04-0000

MAINTENANCE TASK	FREQUENCY						
	D	W	M	Q	SA	A	O
Inspect valve stem and plate for any build up of material, clean if needed						M	
Check for leaks around packing						M	

RAW SEWAGE PUMPING STATION
DUCT AXIAL SUPPLY FAN
001-048-04-0000

MAINTENANCE TASK	FREQUENCY						
	D	W	M	Q	SA	A	O
Check general condition of fan for noise and vibration			M				
Check and clean the suction screening of any rust build up			M				
Check circuit breaker and cabinet for wear, corrosion, loose wires, etc.					E		
Record meter readings					E		

RAW SEWAGE PUMPING STATION
MOTORIZED VALVE
001-124-01-0000 THROUGH 001-124-04-0000

MAINTENANCE TASK	FREQUENCY						
	D	W	M	Q	SA	A	O
Check condition of lubricant at rack and pinion					M		
Check air pressure and oil to air cylinder actuator					M		
Lubricate bearings and wear plates as required					M		
Check for air leaks around solenoid valve and cylinder					M		

RAW SEWAGE PUMPING STATION
VACUUM PUMP
001-141-01-0000 AND 001-141-02-0000

MAINTENANCE TASK	FREQUENCY						
	D	W	M	Q	SA	A	O
Check oil level			M				
Observe pump operation noting any noise, vibration or leaks			M				
Check couplings and belts			M				
Inspect filters and traps			M				
Inspect for oil leaks			M				

RAW SEWAGE PUMPING STATION
VACUUM TANK
001-14I-01-1000

MAINTENANCE TASK	FREQUENCY						
	D	W	M	Q	SA	A	O
Drain tank of any accumulated water			M				
Check tank controls for proper operation and settings			M				
Check vacuum pump silencers for cleanliness			M				

RAW SEWAGE PUMPING STATION
AIR RECEIVER TANK
001-147-03-0000 AND 001-147-04-0000

MAINTENANCE TASK	FREQUENCY						
	D	W	M	Q	SA	A	O
Check all piping and connections for corrosion and leaks					O		
Isolate air receiver tank from system					O		
Blow down tank and remove condensate drain					O		
Disassemble trap and clean					O		
Isolate drain assembly from air receiver					O		
Blow down drain assembly					O		
Remove drain assembly and disassemble, clean and inspect, reassemble					O		
Open all valves slowly and check for air leaks					O		

RAW SEWAGE PUMPING STATION
MOTOR CONTROL CENTER
001-190-01-0000

MAINTENANCE TASK	FREQUENCY						
	D	W	M	Q	SA	A	O
• Test all electrical "cans"						E	
• Tighten loose connectors						E	
• Take photographs of units showing signs of "hot spots"						E	

RAW SEWAGE PUMPING STATION
R.T.U. NO. 17
001-201-01-0000

MAINTENANCE TASK	FREQUENCY						
	D	W	M	Q	SA	A	O
• Observe unit running			M				
• Check door seal			M				
• Test battery back up system					I		
• Check battery voltage, amperage					I		
• Check to see if program is lost					I		
• Replace battery if needed					I		
• Change primary and canister filters, record date on inside cover of unit					M		

POWER GENERATION (001)
STARTING AIR COMPRESSORS
001-020-03-0000 AND 001-020-04-0000

MAINTENANCE TASK	FREQUENCY						
	D	W	M	Q	SA	A	O
STARTING AIR COMPRESSOR							
• Check overall condition		O					
• Check after cooler for obstructions		O					
• Check and test automatic drain valve operation		O					
• Check lube oil level. Drain, flush and refill if contaminated		O					
• Check belt condition and tension. Adjust or replace as required		O					
• Check air intake filters. Clean or replace as needed		O					
• Clean cooling fins, if required		O					
• Test run unit					E		
• Check pressure switches					E		
• Clean and lubricate motor as required					M		
• Check compressor intake filters. Clean or replace as needed					M		
• Change oil					M		
• Check belt tension, wear, guards and mounting					M		
CONDENSATE TANK							
• Check piping for corrosion and leaks					O		
• Isolate drain, disassemble, clean and inspect					O		
• Check for air leaks					O		

POWER GENERATION (001)
JACKET WATER PUMPS
001-023-01-0000 THROUGH 001-023-03-0000

MAINTENANCE TASK	FREQUENCY						
	D	W	M	Q	SA	A	O
JACKET WATER PUMPS							
• Check general condition	O						

POWER GENERATION (001)
VENTILATION EQUIPMENT
001-056-01-0000 AND 001-056-02-0000

MAINTENANCE TASK	FREQUENCY						
	D	W	M	Q	SA	A	O
SUPPLY AND EXHAUST FANS							
• Check for unusual noise and vibration. If noises develop, check the fan for worn bearings, proper installation and anchoring for adequate clearance of rotating members			M				
• Check fan belt tension			M				
• Clean and check fan shaft			M				
• Check fan and motor sheaves			M				
• Check alignment			M				
LUBRICATION							
• Lubricate fan shaft bearings. Add grease with fan running			E				
NOTE Use low pressure grease gun only.							

POWER GENERATION (001)
SLUDGE GAS FUEL COMPRESSORS (028)
028-089-02-0000 AND 028-089-03-0000

MAINTENANCE TASK	FREQUENCY						
	D	W	M	Q	SA	A	O
SLUDGE GAS FUEL COMPRESSORS							
• Grease seals and bearings as required			O				
• Check drive belts. Replace as needed			O				
• Look, listen and feel for unusual running characteristics			O				
• Check for loose hardware			O				
• Drain oil from gear case. Observe for glitter/sludge. Lock equipment if unusual material found in oil			O				
• Clean and wash unit			O				
• Check compressor for corrosion or oil contamination. Clean if required. Refer to manufacturer's literature for procedure and type of cleaners			M				
• Check operating temperature, terminal connections, and starter							E
• Test insulation resistance of motor winding							E
• Clean motor							E

POWER GENERATION (001)
ENGINE GENERATORS
081-170-01-0000 AND 081-170-02-0000
080-170-03-0000 THROUGH 080-170-05-0000

MAINTENANCE TASK	FREQUENCY						
	D	W	M	Q	SA	A	O
ENGINE GENERATORS							
• Exchange crankcase breather assembly			O				
• Change pre-air intake filter			O				
• Record engine hours			O				
• Check for noise and vibration while engine is running			O				
• Shut off lube oil from heater and oil pump. Drain lube oil from sump			O				
• Drain lube oil from Intercooler			O				
• Drain lube oil from filter			O				
• Replace lube oil filters and change cover O-Ring. Clean element springs and retainers before assembly.			O				
• Remove and clean oil strainer. Replace all O-Rings. Closely inspect for foreign matter			O				
• Refill crankcase and oil filter assembly with lube oil. Vent air from oil filter. Turn on Auxiliary Lube Oil Pump after 75 gallons is pumped into crankcase			O				
• Replace air intake pre-filters. Blow out main air filters or replace			O				
• Top off one-shot started lubricator, use Marvel Mystery Oil and keep one inch below inspect port. Do not over-fill			O				
• Remove, inspect, and clean "Y" Strainer			O				
• Remove and clean crankcase breather assembly. Replace gasket as required			O				
• Replace gas filter element			O				
• Grease governor to carburetor throttle linkage ball joints			O				

POWER GENERATION (001)
ENGINE GENERATORS
081-170-01-0000 AND 081-170-02-0000
080-170-03-0000 THROUGH 080-170-05-0000 (cont.)

MAINTENANCE TASK	FREQUENCY						
	D	W	M	Q	SA	A	O
ENGINE GENERATORS (cont.)							
• Top off generator bearing reservoir			O				
• Replace/clean spark plugs			O				
• Check and record crankcase pressure			O				
• Clean loose dust using dry, low-psi air			O				
• Check, record and adjust gas regulator IWC			O				
• Check intake vacuum			O				
• Replace thermocouple cylinders			O				
• Check, record and set engine timing			O				
• Clean generator			O				
• Clean and inspect gas solenoid valve assembly			O				

POWER GENERATION (001)
ENGINE GENERATORS (080, 081)
081-170-01-0000

MAINTENANCE TASK	FREQUENCY						
	D	W	M	Q	SA	A	O
ENGINE GENERATORS							
• Prior to engine shut-down, determine if push rod assemblies need replacement. Complete inspection after shut-down. Replace all deadman bolts when push rod assemblies are exchanged. Set valves; replace cover gaskets. Inspect valve covers for cracks or distortion; replace as required.					O		
• Set valves; replace all valve cover gaskets. Inspect valve covers for serious cracks and bends, replace if required					O		
• Drain, flush and refill engine cooling system. Add six (6) gallons NALCO 3000 and test the Ph. Add additional NALCO 3000 if needed					O		
• Rebuild main and mixer carburetors and butterfly assemblies. Reset						O	
• Remove and clean Intake Manifold. Inspect intake valves for oil leakage. Replace valve stem oil seals where required						O	
• Prior to engine shut-down, determine if pushrod tube O-Rings need to be replaced. Replace as required						O	
• Take cylinder compression tests. Record in record book						O	
• Rebuild (Fisher) Gas regulators						O	
• Rebuild governor drive gear dampeners						O	
• Replace lube oil pump bushings and nuts						O	
• Remove crank case doors, inspect sump for debris. Replace crankcase door gaskets. Clean sump area with lint-free clean rags. Inspect rags for tell-tale signs of excessive bearing or ring wear materials						O	
• Check coolant over temperature switch and wires, set if required to 200 degrees F						O	
• Replace spark plug cables						O	

POWER GENERATION (001)
ENGINE GENERATORS (080, 081)
081-170-01-0000 (cont.)

MAINTENANCE TASK	FREQUENCY						
	D	W	M	Q	SA	A	O
ENGINE GENERATORS (cont.)							
• Check all connections for tightness, leaks, etc. Correct any problems and report same						O	
• Test overspeed device. Reset if required						O	
• Lube coupling. Clean inside/outside of coupling housing						O	
• Clean Jacket Water and Auxiliary Intercoolers. Use fresh gaskets when closing assembly. Tag all closed water valves. Open all closed valves when work is completed and remove tags						O	
• Disassemble, clean, inspect Air Relay Valve in Start Air Line. Replace O-Rings as required						O	

STANDBY POWER FACILITIES (078)
DIESEL ENGINE GENERATORS
078-026-03-0000 THROUGH 078-026-06-0000

MAINTENANCE TASK	FREQUENCY						
	D	W	M	Q	SA	A	O
DIESEL ENGINE - GENERAL							
• Inspect engine for leaks and loose connections	M						
• Check and tighten all nuts, bolts, screws and coupling nuts		M					
• Inspect the engine parts for wear and damage. Replace if necessary. Refer to manufacturer's literature for fixing procedures				M			
• Inspect exterior surface coatings. Repaint if necessary						M	
• Make an operation leakage check after replacing any parts of the engine							M
• Check electrical harness leads and cables		E					
• Check all pressure gauges	O						
• Check all belts and hoses			M				
• Inspect zinc rods, replace if necessary		M					
• Check oil level in the engine crank case	O						
• Clean crank case breather system				M			
• Inspect all engine protective devices				M			
• Check fluid level in governor	O						
• Inspect crankshaft vibration damper						M	
• Inspect engine mounts						M	
• Inspect turbo chargers						M	
• Check engine valve lash and rotators						M	
• Refer to manufacturer's literature for removal and reinstallation procedures of all engine parts							M
• Refer to manufacturer's literature for trouble-shooting procedures							M

STANDBY POWER FACILITIES (078)
DIESEL ENGINE GENERATORS
078-026-03-0000 THROUGH 078-026-06-0000

MAINTENANCE TASK	FREQUENCY						
	D	W	M	Q	SA	A	0
JACKET WATER SYSTEM							
• Check jacket water level in the engine	O						
• Drain, flush and refill jacket water						M	
ENGINE FUEL OIL SYSTEM							
• Check fuel filter differential pressure	O						
• Replace fuel filters					M		
• Inspect fuel nozzles for spray tip damage. Replace if necessary					M		
• Clean fuel nozzles air shrouds				M			
ENGINE LUBE OIL SYSTEM							
• Check lube oil differential pressure	O						
• Obtain oil sample for analysis			M				
• Replace oil filters			M				
125V AND 24V BATTERY SYSTEM							
• Maintain the electrolyte level. Use distilled water and wipe off any water spilled on the cell tops			E				
• Clean battery from dirt and carbonate build-up						E	
GENERATOR SET							
• Inspect lead wires and control device wiring for cracked insulation and loose terminals				E			
• Inspect control devices for accumulation of dust, moisture and other foreign matter				M			
• Clean the generator assembly from dirt, oil and carbon deposits		M					
• Clean ventilation screens			M				

STANDBY POWER FACILITIES (078)
DIESEL ENGINE GENERATORS
078-026-03-0000 THROUGH 078-026-06-0000

MAINTENANCE TASK	FREQUENCY						
	D	W	M	Q	SA	A	0
GENERATOR SET (continued)							
• Check control devices and meters for correct adjustment and operation			M				
• Check for unusual noise and excessive vibration	O						
• Check alignment of generator set and prime mover			M				
• Test insulation resistance of generator motor windings. Refer to manufacturer's literature for instructions				E			
• Inspect control equipment for loose mounting hardware. Inspect meters for bent indicators and broken glass			I				
VOLTAGE REGULATOR							
• Check and tighten connections between the regulator and system		E					
• Clean unit from dirt				E			
• Test for effective operation			E				
• Check parts for damage and malfunction. Replace faulty components					E		
• Refer to manufacturer's literature for trouble-shooting procedures							E
ANNUNCIATOR							
• Check system for proper connection to the external devices and for faulty plug-in						I	
• Test for defective audible signal			I				
• Change burned-out lamps and check flashed for damage							I

STANDBY POWER FACILITIES (078)
HEAT EXCHANGERS AND SEPARATORS
078-136-01-0000 THROUGH 078-136-04-0000 AND
078-139-01-0000 THROUGH 078-139-02-0000

MAINTENANCE TASK	FREQUENCY						
	D	W	M	Q	SA	A	0
HEAT EXCHANGERS							
• Inspect condition of unit	O			M			
• Clean debris from unit	O						
• Inspect for fouling						M	
• Clean as needed							M
SEPARATORS							
• Purge after each extended use							M

STANDBY POWER FACILITIES (078)
JACKET WATER PUMPS
078-023-01-0000 THROUGH 078-023-03-0000

MAINTENANCE TASK	FREQUENCY						
	D	W	M	Q	SA	A	0
JACKET WATER PUMPS							
• Check for unusual noise and excessive vibration	O						
• Check bearing temperature; bearing temperature should not be 120 degrees F above the surrounding temperaurre	O	M					
NOTES Operators are required to manually check the temperature of bearings daily. Mechanical Maintenance Personnel are required to check the temperature of bearing with a temperature sensing device weekly, as recommended by the manufacturer.							
• Check mechanical seal for leakage	O						
• Replace mechanical seal if required. Refer to manufacturer's literature for procedure							M
• Clean bearing housing and bearings. Use kerosene or mineral spirits. Repack with clean ball-bearing grease. Check that water slingers are in correct places.						M	
• Check for misalignment of coupling and shaft						M	
• Check shaft and shaft sleeve for scoring						M	
• Check coupling for wear						M	
• Refer to manufacturer's literature for trouble-shooting							M
MOTOR							
• Check for unusual noise, excessive vibration and any other abnormal conditions	O						
• Check operating temperature of motor bearings, bearing temperature should not be 120 degrees F above the surrounding temperature	O	M					

STANDBY POWER FACILITIES (078)
JACKET WATER PUMPS
078-023-01-0000 THROUGH 078-023-03-0000

MAINTENANCE TASK	FREQUENCY						
	D	W	M	Q	SA	A	0
MOTOR (continued)							
NOTES Operators are required to manually check the temperature of bearings daily. Mechanical Maintenance Personnel are required to check the temperature of bearing with a temperature sensing device weekly, as recommended by the manufacturer.							
• Check terminal connections, assembly screws, bolts and nuts for tightness							E
• Examine starter, switch, fuses and other control		E					
• Test insulation resistance of motor winding. Refer to manufacturer's literature for instruction						E	
• Clean the motor inside and outside. Use dry compressed air for dust and dry dirt and mineral spirits for accumulated sticky dirt and grease		M					
NOTE Do not use gasoline or other inflammable solvents.							
LUBRICATION							
• Lubricate pump bearings with ball bearing grease. Do not over grease				M			
• Lubricate bearings of coupling through grease fittings in accordance with manufacturer's recommended procedure					E		
• Lubricate motor bearings in accordance with manufacturer recommendation. Do not over grease							E

STANDBY POWER FACILITIES (078)
COOLING TOWERS
078-287-01-0000 THROUGH 078-287-03-0000

MAINTENANCE TASK	FREQUENCY						
	D	W	M	Q	SA	A	0
COOLING TOWERS							
• Inspect condition of tower	O		M				
• Inspect and clean chamber strainer	O		M				
• Inspect and clean cold water sump	O		M				
• Inspect and clean air inlet louvers	O		M				
• Check and adjust water level in cold water sump	O		M				
• Check operation of make-up valve	O		M				
• Check bleed rate and adjust	O		M				
• Check condition of belt	O		M				
• Readjust tension on belt				M			
• Lubricate fan shaft bearings				M			
• Lubricate motor base adjusting screw				M			
• Clean outside of fan motor				M			

STANDBY POWER FACILITIES (078)
CHEMICAL FEED PUMP
078-024-01-0000

MAINTENANCE TASK	FREQUENCY						
	D	W	M	Q	SA	A	0
CHEMICAL FEED PUMP							
• Check for unusual noise and excessive vibration	O						
• Check bearing temperature; bearing temperature should not be 120 degrees F above the surrounding temperature	O	M					
NOTES Operators are required to manually check the temperature of bearings daily. Mechanical Maintenance personnel are required to check the temperature of bearing with a temperature sensing device weekly, as recommended by the manufacturer.							
• Check mechanical seal for leakage	O						
• Replace mechanical seal if required. Refer to manufacturer's literature for procedure							M
• Clean bearing housing and bearings. Use kerosene or mineral spirits. Repack with clean ball-bearing grease. Check that water slingers are in correct places						M	
• Check for misalignment of coupling and shaft						M	
• Check shaft and shaft sleeve for scoring						M	
• Check coupling for wear						M	
• Refer to manufacturer's literature for trouble-shooting procedures							M
MOTOR							
• Check for unusual noise, excessive vibration and any other abnormal conditions	O						

STANDBY POWER FACILITIES (078)
STARTING AIR COMPRESSORS
078-020-01-0000 AND 078-020-02-0000

MAINTENANCE TASK	FREQUENCY						
	D	W	M	Q	SA	A	0
STARTING AIR COMPRESSOR							
• Check for unusual noise and excessive vibration	O						
• Inspect for air or oil leak	O						
• Drain condensate (compressor and receiver)	O						
• Clean and inspect for wear the crank case breather					M		
• Clean air filter, cylinder cooling fins, after cooler and motor bearings			M				
NOTE Wash filter element in kerosene or water with solvent. Do not use gasoline or other explosive mixture							
• Check air filter for leak and damage			M				
• Inspect and clean suction and discharge valves. Replace worn or leaking valve				M			
• Refer to manufacturer's literature for trouble-shooting							M
• Check operation of all switches				M			
• Manually operate safety valves (compressor and receiver)			O				
• Check V-belt tension			M				
MOTOR							
• Inspect for cleanliness, moisture, overloading, temperature and vibration	O						
• Test insulation resistance of motor winding. Refer to manufacturer's literature for instructions						E	
• Check bearing temperature. Bearing temperature should be less than 200 degrees F	O	M					

STANDBY POWER FACILITIES (078)
STARTING AIR COMPRESSORS
078-020-01-0000 AND 078-020-02-0000

MAINTENANCE TASK	FREQUENCY						
	D	W	M	Q	SA	A	0
MOTOR (Continued)							
NOTES							
Operators are required to manually check the temperature of bearings daily.							
Mechanical Maintenance Personnel are required to check the temperature of motor bearings with a temperature sensing device weekly, as recommended by the motor manufacturer.							
• Refer to manufacturer's literature for trouble-shooting procedures							E
LUBRICATION							
• Check oil pressure and level	O						
• Inspect oil for contamination			M				
• Change lubrication oil				M			
• Lubricate electric motor in accordance with manufacturer recommendation					E		
• Lubricate O-ring						M	

STANDBY POWER FACILITIES (078)
FUEL OIL PUMPS
078-046-01-0000 AND 078-046-02-0000

MAINTENANCE TASK	FREQUENCY						
	D	W	M	Q	SA	A	0
FUEL OIL PUMPS							
• Check for unusual noise and excessive vibration	O						
• Check bearing temperature; bearing temperature should not be 120 degrees F above the surrounding temperature	O	M					
NOTES							
Operators are required to manually check the temperature of bearings daily.							
Mechanical Maintenance Personnel are required to check the temperature of bearing with a temperature sensing device weekly, as recommended by the manufacturer.							
• Check mechanical seal for leakage	O						
• Replace mechanical seal if required. Refer to manufacturer's literature for procedure							M
• Clean bearing housing and bearings. Use kerosene or mineral spirits. Repack with clean ball-bearing grease. Check that water slingers are in correct places						M	
• Check for misalignment of coupling and shaft						M	
• Check shaft and shaft sleeve for scoring						M	
• Check coupling for wear						M	
• Refer to manufacturer's literature for trouble-shooting procedures							M
MOTOR							
• Check for unusual noise, excessive vibration and any other abnormal conditions	O						
• Check operating temperature of motor bearings; bearing temperature should not be 120 degrees F above the surrounding temperature	O	M					

STANDBY POWER FACILITIES (078)
FUEL OIL PUMPS
078-046-01-0000 AND 078-046-02-0000

MAINTENANCE TASK	FREQUENCY						
	D	W	M	Q	SA	A	0
MOTOR (Continued)							
NOTES							
Operators are required to manually check the temperature of motor bearing daily.							
Mechanical Maintenance Personnel are required to check the temperature of motor bearings with a temperature sensing device weekly, as recommended by the motor manufacturer.							
• Check terminal connections, assembly screws, bolts and nuts for tightness							E
• Examine starter, switch, fuses and other control		E					
• Test insulation resistance of motor winding. Refer to manufacturer's literature for instruction						E	
• Clean the motor inside and outside. Use dry compressed air for dust and dry dirt and mineral spirits for accumulated sticky dirt and grease		M					

STANDBY POWER FACILITIES (078)
FUEL OIL COOLERS AND ACCESSORIES
078-211-01-0000 THROUGH 078-211-04-0000

MAINTENANCE TASK	FREQUENCY						
	D	W	M	Q	SA	A	0
FUEL OIL COOLERS							
• Check for unusual noise and excessive vibration	O						
• Clean the fin side with steam or air				M			
• Clean the tube side by circulating kerosene through the cooler						M	
NOTE Do NOT use water or acid to clean the tube side							
STRAINERS AND FILTERS							
• Check differential pressure	O						
• Clean strainer screen cylinder				M			
• Replace filter element						M	
FUEL OIL LEAK DETECTION SYSTEM							
• Test alarm console					O		
• Inspect sensors for fouling						M	
• Clean sensors if a leak occurs							M

STANDBY POWER FACILITIES (078)
FRESH AND WASTE LUBE OIL PUMPS
078-253-01-0000 AND 078-253-02-0000

MAINTENANCE TASK	FREQUENCY						
	D	W	M	Q	SA	A	0
FRESH AND WASTE LUBE OIL PUMPS							
• Check for unusual noise and excessive vibration	O						
• Check bearing temperature; bearing temperature should not be 120 degrees F above the surrounding temperature	O	M					
NOTES Operators are required to manually check the temperature of bearings daily. Mechanical Maintenance Personnel are required to check the temperature of bearing with a temperature device weekly, as recommended by the manufacturer.							
• Check mechanical seal for leakage	O						
• Replace mechanical seal if required. Refer to manufacturer's literature for procedure							M
• Clean bearing housing and bearings. Use kerosene or mineral spirits. Repack with clean ball-bearing grease. Check that water slingers are in correct places						M	
• Check for misalignment of coupling and shaft						M	
• Check shaft and shaft sleeve for scoring						M	
• Check coupling for wear						M	
• Refer to manufacturer's literature for trouble-shooting procedures							M
MOTOR							
• Check for unusual noise, excessive vibration and any other abnormal conditions	O						
• Check operating temperature of motor bearings; bearing temperature should not be 120 degrees F above the surrounding temperature	O	M					

STANDBY POWER FACILITIES (078)
FRESH AND WASTE LUBE OIL PUMPS
078-253-01-0000 AND 078-253-02-0000

MAINTENANCE TASK	FREQUENCY						
	D	W	M	Q	SA	A	0
MOTOR (Continued)							
NOTES Operators are required to manually check the temperature of motor bearing daily. Mechanical Maintenance Personnel are required to check the temperature of motor bearings with a temperature sensing device weekly, as recommended by the motor manufacturer.							
• Check terminal connections, assembly screws, bolts and nuts for tightness							E
• Examine starter, switch, fuses and other control		E					
• Test insulation resistance of motor winding. Refer to manufacturer's literature for instruction						E	
• Clean the motor inside and outside. Use dry compressed air for dust and dry dirt and mineral spirits for accumulated sticky dirt and grease		M					
NOTE Do not use gasoline or other inflammable solvents.							
LUBRICATION							
• Lubricate pump bearings with ball bearing grease. Do not over grease				M			
• Lubricate bearings of coupling through grease fittings in accordance with manufacturer's recommended procedure					E		
• Lubricate motor bearings in accordance with manufacturer recommendation. Do not over grease.							E

STANDBY POWER FACILITIES (078)
HOISTING EQUIPMENT
078-009-01-0000 AND 078-009-02-0000

MAINTENANCE TASK	FREQUENCY						
	D	W	M	Q	SA	A	0
HOISTING EQUIPMENT - GENERAL							
• Check all functional operating mechanisms for any maladjustments that may interfere with proper operation			M				
• Check that warning labels, push button markings or capacity markings have not been removed or are illegible					M		
• Check bolts, nuts and rivets for tightness					M		
• Check brake system for excessive wear and drift					M		
• For detailed maintenance procedures, refer to manufacturer's literature							M
HOOKS							
• Check for deformation and chemical damage			M				
• Check throat opening; replace if bent from normal opening			M				
• Check for twist of hook eye or hook; replace if twisted			M				
• Check for hinge action wear at point of contact and elongation of hook eye			M				
LOAD BEARING CABLE							
• Check load bearing cable for wear, twist, distortion, kinks, strand breaks, improper dead ending, replace cable if conditions described above are excessive			M				
LUBRICATION							
• Check gear oil; maintain level at oil bath			M				
• Lubricate bearings through a grease fitting					M		
• Lubricate shafts					M		

STANDBY POWER FACILITIES (078)
SUMP PUMP
078-008-01-0000

MAINTENANCE TASK	FREQUENCY						
	D	W	M	Q	SA	A	0
SUMP PUMP							
• Check for unusual noise and excessive vibration	O						
• Check bearing temperature; bearing temperature should not be 120 degrees F above the surrounding temperature	O	M					
NOTES Operators are required to manually check the temperature of bearings daily. Mechanical Maintenance Personnel are required to check the temperature of bearing with a temperature sensing device weekly, as recommended by the manufacturer.							
• Check mechanical seal for leakage	O						
• Replace mechanical seal if required. Refer to manufacturer's literature for procedure							M
• Clean bearing housing and bearings. Use kerosene or mineral spirits. Repack with clean ball-bearing grease. Check that water slingers are in correct places						M	
• Wash down pump					M		
• Check for misalignment of coupling and shaft						M	
• Check floats for sludge buildup				M			
• Check shaft and shaft sleeve for scoring						M	
• Check seal oil						M	
• Check coupling for wear						M	
• Refer to manufacturer's literature for trouble-shooting procedures							M
MOTOR							
• Check for unusual noise, excessive vibration and any other abnormal conditions	O						

STANDBY POWER FACILITIES (078)
SUMP PUMP
078-008-01-0000

MAINTENANCE TASK	FREQUENCY						
	D	W	M	Q	SA	A	0
MOTOR (continued)							
• Check operating temperature of motor bearings; bearing temperature should not be 120 degrees F above the surrounding temperature	O	M					
NOTES Operators are required to manually check the temperature of motor bearing daily. Mechanical Maintenance Personnel are required to check the temperature of motor bearings with a temperature sensing device weekly, as recommended by the motor manufacturer.							
• Check terminal connections, assembly screws, bolts and nuts for tightness							E
• Examine starter, switch, fuses and other control		E					
• Test insulation resistance of motor winding. Refer to manufacturer's literature for instruction						E	
• Clean the motor inside and outside. Use dry compressed air for dust and dry dirt and mineral spirits for accumulated sticky dirt and grease		M					

STANDBY POWER FACILITIES (078)
ROOF EXHAUST FANS AND EXHAUST ROOF VENTILATOR
078-050-01-0000 THROUGH 078-050-06-0000

MAINTENANCE TASK	FREQUENCY						
	D	W	M	Q	SA	A	0
ROOF EXHAUST FANS AND EXHAUST ROOF VENTILATOR							
• Check for unusual noise and excessive vibration		O					
• Inspect fan wheels, shafts, housing scroll and side liners for corrosion or abrasive wear. Replace if necessary					M		
• Check all bolts and all connections for tightness					M		
• Clean housing, wheels, louvers, inlet and outlet ductwork of dust and dirt					M		
• Check for worn or damaged belt. Replace if necessary					M		
• Clean alignment of sheaves and belt tension					M		
• Clean dampers and check for freedom of movement, corrosion and erosion					M		
• Check alignment of all parts					M		
LUBRICATION							
• Lubricate fan bearings					M		
• Lubricate motor bearings according to the manufacturer's recommendations. Do not over lubricate			E				

STANDBY POWER FACILITIES (078)
AIR CONDITIONING UNIT
078-051-01-0000

MAINTENANCE TASK	FREQUENCY						
	D	W	M	Q	SA	A	0
AIR CONDITIONING UNIT							
• Inspect air filters and replace if needed			M				
• Inspect pump and clean if needed			M				
• Inspect unit coils. Clean if necessary					M		
• Inspect unit casing and accessories for paint chipping or corrosion. If damage is found, clean and repaint						M	
• Clean fan wheels and fan shaft. If rust is found on the fan shaft, remove with emery cloth and recoat						M	
• Check condensate drain line and drain pan for sludge or other foreign material					M		
• Check damper linkage, setscrews and blade adjustment for proper operation						M	
• Check refrigeration system pressure				M			
• Check thermostat control for proper operation. Refer to manufacturer's literature for instructions							I
• Refer to manufacturer's literature for trouble-shooting procedures							M
• Inspect belts and pulleys					M		
FAN BEARINGS							
• If noises develop, check all bearing races and locking devices for tightness, check the fan for worn bearings and for adequate clearance of rotating members					M		
FAN MOTOR							
• Check for excessive vibration and high temperature			O				
LUBRICATION							
• Lubricate fan bearings. Do not over lubricate. Add grease only while fan is operating					M		
• Lubricate motor in accordance with manufacturer instruction					E		

JUNCTION CHAMBER AND METER VAULT NO. 1 AND ODOR CONTROL (002; 003; 037)
SLUICE GATES
002-012-01-0000 THROUGH 002-012-22-0000

MAINTENANCE TASK	FREQUENCY						
	D	W	M	Q	SA	A	O
SLUICE GATE							
• Clean stem			O				
NOTE The frequency for cleaning the sluice gate stem applies to new equipment. The actual required cleaning frequency will be determined based on use of equipment.							
• Clean gate guide groove and stem guide of any foreign matter				O			
• Check operating nut				M			
• Check gate guide groove and stem guide for proper alignment and bolts for tightness					M		
• Check wedge attaching studs and locknuts for proper tightness. Adjust if required					M		
ELECTRIC OPERATOR							
• Clean geared limit and torque switch contact. Use mineral spirits on lint-free cloth					E		
• Check limit switch gear box for damage; replace if necessary					E		
• Check wiring and push button contacts					E		
• Refer to manufacturer's literature for trouble-shooting procedures							E
LUBRICATION							
• Lubricate drive sleeve top bearing			M				
• Lubricate threaded portion of stem			M				
• Check condition of lubricate					M		

JUNCTION CHAMBER AND METER VAULT NO. 1 AND ODOR CONTROL (002; 003; 037)
AIR BLOWERS
002-018-01-0000 AND 002-018-04-0000

MAINTENANCE TASK	FREQUENCY						
	D	W	M	Q	SA	A	O
AIR BLOWER							
• Check for unusual noise and excessive vibration; refer to manufacture's literature for possible cause and corrective action.	O						
• Check bearing temperature; bearing temperature should be less than 190 degrees F	O	M					
NOTES							
Operators are required to manually check the temperature of bearings daily.							
Mechanical Maintenance Personnel are required to check the temperature of bearings with a temperature sensing device, as recommended by manufacturer weekly.							
• Check coupling for alignment and wear. Replace if necessary					M		
• Clean oil breather with solvent and blow out with clean compressed air					M		
• Clean filter element. Replace if necessary				M			
• Refer to manufacturer's literature for trouble-shooting procedures							M
MOTOR							
• Check operating temperature or motor bearings; bearing temperature should be less than 200 degrees F	O	M					
NOTES							
Operators are required to manually check the temperature of motor bearings daily.							
Mechanical Maintenance Personnel are required to check the temperature of motor bearings with a temperature sensing device, as recommended by the motor manufacturer weekly.							
• Check alignment of motor and driven shaft					M		
• Test insulation resistance of motor winding. Refer to manufacturer's literature for instructions						E	

JUNCTION CHAMBER AND METER VAULT NO. 1 AND ODOR CONTROL (002; 003; 037)
AIR BLOWERS
002-018-01-0000 AND 002-018-04-0000

MAINTENANCE TASK	FREQUENCY						
	D	W	M	Q	SA	A	O
MOTOR (continued)							
• Inspect for cleanliness, moisture, overloading and excessive vibration				O			
• Refer to manufacturer's literature for trouble-shooting procedures							M

JUNCTION CHAMBER AND METER VAULT NO. 1 AND ODOR CONTROL (002; 003; 037)
SCUM TRANSFER PUMP
003-016-01-0000

MAINTENANCE TASK	FREQUENCY						
	D	W	M	Q	SA	A	O
SCUM TRANSFER PUMP							
• Check for unusual noise and vibration	O						
• Check packing and replace if necessary. Be sure the lantern ring is centered in the stuffing box at the entrance of the water seal piping connection					M		
• Check temperature stuffing box, if overheating, packing may be too tight, and is not allowing leakage of flushing water			M				
• Check operating temperature of motor bearings; bearing temperature should not be above 200 degrees F	O	M					
NOTES Operators are required to manually check the temperature of motor bearings daily. Mechanical Maintenance Personnel are required to check the temperature of motor bearings with a temperature sensing device, as recommended by the motor manufacturer weekly.							
• Check shaft or shaft sleeve for scoring; scoring accelerates packing wear					M		
• Check alignment of pump and motor; skim up units if necessary; if misalignment occurs frequently, inspect the entire piping system; unbolt piping at suction and discharge flanges to see if it springs away indicating strain on casing; inspect all pipe supports for soundness and effective support of load					M		
• Check the drive belts for excessive wear; replace if necessary					M		
• Check parts of motion control variable speed sheave for wear or damage. Replace if necessary							E
• Clean motor. Use mineral spirits			E				
• Refer to manufacturer's literature for trouble-shooting procedures							M

JUNCTION CHAMBER AND METER VAULT NO. 1 AND ODOR CONTROL (002; 003; 037)
SCUM TRANSFER PUMP
003-016-01-0000

MAINTENANCE TASK	FREQUENCY						
	D	W	M	Q	SA	A	O
LUBRICATION							
• Check oil level in ball bearing reservoir; keep filled to sight glass level; do not overfill	O						
• Check oil level and refill the reservoir of motion control variable speed sheave		E					
• Lubricate motor bearings in accordance with manufacturer recommendation. Do not over grease					E		

JUNCTION CHAMBER AND METER VAULT NO. 1 AND ODOR CONTROL (002; 003; 037)
METER
003-036-01-0000

MAINTENANCE TASK	FREQUENCY						
	D	W	M	Q	SA	A	O
METER							
• Check for leaks on all connections	O						
• Check the pump output pressure. Adjust if necessary					I		
NOTE Pump output pressure should be 10-15 psi higher than the maximum line pressure.							
• Check the pressure sensor balance and operation as recommended by manufacturer					I		
• Clean the pressure sensor orifices and nozzles with the cleaning pins or by flushing if required					I		
• Check the output at zero flow as recommended by manufacturer					I		
• Refer to manufacturer's literature for trouble-shooting procedures							I
• For detailed maintenance procedures of instrumentation equipment refer to manufacturer's literature							I
TRANSMITTER							
• Check for leak of mercury on all connections	O						
• Check calibration and operation as recommended by manufacturer					I		
• Check zero adjustment					I		
LUBRICATION							
• Check the oil level in the pump reservoir and refill if required			O				
• Lubricate motor through the two rubber hoods. Use only a few drops of machine oil					E		

JUNCTION CHAMBER AND METER VAULT NO. 1 AND ODOR CONTROL (002; 003; 037)
SUPPLY FAN
002-048-01-0000, 003-048-01-0000, 037-048-01-0000

MAINTENANCE TASK	FREQUENCY						
	D	W	M	Q	SA	A	O
V-BELT DRIVE SUPPLY FAN							
• Check for unusual noise and vibration. If noises develop, check the fan for worn bearings, proper installation and anchoring and for adequate clearance of rotating members							M
• Check condition of V-belt; replace if necessary					M		
• Check V-belt tension. If adjustment is made, check pulley alignment					M		
LUBRICATION							
• Lubricate fan shaft ball bearings. Add grease with the fan running					M		
NOTE Use low pressure grease gun only.							
• Lubricate motor bearings. Apply grease while motor is running. Do not over grease					E		

JUNCTION CHAMBER AND METER VAULT NO. 1 AND ODOR CONTROL (002; 003; 037)
WASTEWATER SAMPLE EQUIPMENT
002-042-01-0000

MAINTENANCE TASK	FREQUENCY						
	D	W	M	Q	SA	A	O
WASTEWATER SAMPLE EQUIPMENT							
• Wipe down interior and exterior of the refrigerator when the sample containers are removed	O						
• Check visually air pressure and adequate reservoir flow	O						
• Check visually one or two sampling cycles for proper operation of the sampler	O						
• Check visually oil level and air filter lubricator		O					
• Clean sample funnel, tube and sample cup		O					
• Clean reservoir		O					
• Defrost refrigerator and check operating temperature			O				
• Remove and empty lubricator, clean glass and refill with oil to the proper level			O				
• Clean filter bowl. Use drain valve		O					
• Clean filter parts with methanol			O				
NOTE Never use carbon tetrachloride, trichlorethylene, thinner, acetone or similar solvents.							
• Check diaphragm; replace if swollen or stiff					M		
• Check disc assembly; replace if it is worn or nicked					M		
• Check operating speeds of sampling arms. Adjust if necessary			O				
• Check solenoid valve					M		

JUNCTION CHAMBER AND METER VAULT NO. 1 AND ODOR CONTROL (002; 003; 037)
ROOF EXHAUST FANS
002-050-01-0000 THROUGH 002-050-04-0000, 037-050-01-0000

MAINTENANCE TASK	FREQUENCY						
	D	W	M	Q	SA	A	O
ROOF EXHAUST FAN							
• Check for unusual noise and vibration. If noises develop, check the fan for worn bearings, proper installation and anchoring and for adequate clearance of rotating members							M
• Check condition of V-belt; replace if necessary					M		
• Check V-belt tension. If adjustment is made, check pulley alignment					M		
LUBRICATION							
• Lubricate fan shaft ball bearings. Add grease with the fan running					M		
NOTE Use low pressure grease gun only.							
• Lubricate motor bearings. Apply grease while motor is running. Do not over grease					E		

JUNCTION CHAMBER AND METER VAULT NO. 1 AND ODOR CONTROL (002; 003; 037)
EXHAUST FANS
002-056-01-0000 THROUGH 002-056-03-0000

MAINTENANCE TASK	FREQUENCY						
	D	W	M	Q	SA	A	O
EXHAUST FAN							
• Check for unusual noise and excessive vibration		O					
• Inspect fan wheels, shafts, housing scroll and side liners for corrosion or abrasive wear. Replace if necessary					M		
• Check all bolts and all connections for tightness					M		
• Clean housing, wheels, louvers, inlet and outlet ductwork of dust and dirt					M		
• Check for worn or damaged belt. Replace if necessary					M		
• Check alignment of sheaves and belt tension					M		
• Clean dampers and check for freedom of movement, corrosion and erosion					M		
• Check alignment of all parts					M		
• Clean by wiping the temperature control sensing coil					M		
LUBRICATION							
• Lubricate fan bearings					M		
• Lubricate motor bearings according to the manufacturer's recommendations. Do not over lubricate			E				

JUNCTION CHAMBER AND METER VAULT NO. 1 AND ODOR CONTROL (002; 003; 037)
OXYGEN PURITY ANALYZER
002-043-01-0000

MAINTENANCE TASK	FREQUENCY						
	D	W	M	Q	SA	A	O
OXYGEN PURITY ANALYZER							
• Drain condensate from filter		O					
• Change the filter element when pressure drop exceeds three times initial pressure drop							I
• Check span, amplifier and gas zero. Refer to manufacturer's literature for procedure		I					
• Check the performance of the instrument. Check loop gain, noisy or erratic recorder trace and instability as recommended by manufacturer					I		
• Inspect circuits for proper function					I		
• Check measuring cell and prefocus lamp for damage. Replace if necessary. Refer to manufacturer's literature for procedure					I		

JUNCTION CHAMBER AND METER VAULT NO. 1 AND ODOR CONTROL (002; 003; 037)
COMBUSTIBLE GAS DETECTION SENSOR
002-044-01-0000 AND 002-044-02-0000

MAINTENANCE TASK	FREQUENCY						
	D	W	M	Q	SA	A	O
COMBUSTIBLE GAS DETECTION SENSOR							
• Test and adjust alarm and warning points in accordance with the manufacturers recommendation					I		
• Check alarm circuit					I		
• Check the calibration					I		

JUNCTION CHAMBER AND METER VAULT NO. 1 AND ODOR CONTROL (002; 003; 037)
SUMP PUMP
003-008-01-0000 AND 002-008-01-0000

MAINTENANCE TASK	FREQUENCY						
	D	W	M	Q	SA	A	O
SUMP PUMP							
• Check operating temperature of motor bearings; bearing temperature should not be above 200 degrees F	O	M					
NOTE Operators are required to manually check the temperature of motor bearings daily Mechanical Maintenance Personnel are required to check the temperature of motor bearings with a temperature sensing device, as recommended by the motor manufacturer weekly.							
• Check for unusual noise and excessive vibration; refer to manufacturer's literature for cause and corrective action	O						
• Check impeller clearance; adjust as required					M		
• Check coupling for wear and replace if necessary					M		
• Check for misalignment of coupling and shaft					M		
• Check water lubrication line for damage and tightness					M		
• Refer to manufacturer's literature for trouble-shooting procedures							M
LUBRICATION			M				
• Lubricate thrust bearings							
• Lubricate motor bearings in accordance with manufacturer recommendation. Do not over grease					E		

JUNCTION CHAMBER AND METER VAULT NO. 1 AND ODOR CONTROL (002; 003; 037)
AIR COMPRESSOR
002-020-01-0000 AND 002-020-03-0000

MAINTENANCE TASK	FREQUENCY						
	D	W	M	Q	SA	A	O
AIR COMPRESSOR EQUIPMENT							
• Perform overall visual inspection for loose bolts, connections and wiring	O						
• Check the UNIT for unusual noise or excessive vibration	O						
• Clean the unit by wiping it down	O						
• Check foundation bolts tightness						M	
• Check sheave alignment							M
• Check for proper belt tension. Adjust if necessary							M
• Drain accumulated moisture from the strainer; drain all condensate traps	O						
• Inspect and clean, if necessary, crankcase breather					M		
• Clean oil strainer; use nonflammable cleaning solvent						M	
• Drain and clean filter shell; install new oil filter element and add one quart at shell					M		
• Inspect piston ring for wear and free movement						M	
• Check piston rod packing for leaks			M				
• Inspect oil scraper rings for leakage. Replace if necessary			M				
• Inspect cylinder liner for scoring. Replace if necessary, and install new gasket					M		
• Inspect air intake filter; clean if necessary			M				
• Check all safety devices for proper operation					I		
• Inspect pressure switches					E		
• Inspect all valves. Replace faulty parts					M		
• Clean solenoid valves, when leakage occurs. Inspect and replace worn or damaged parts							M

JUNCTION CHAMBER AND METER VAULT NO. 1 AND ODOR CONTROL (002; 003; 037)
WASTEWATER SAMPLE PUMPS
002-032-01-0000

MAINTENANCE TASK	FREQUENCY						
	D	W	M	Q	SA	A	O
SAMPLE PUMP							
• Perform overall visual inspection						M	
• Check guide vane seal ring; replace if necessary						M	
NOTE							
Do note start until pump is filled with water.							
• Refer to manufacturer's literature for trouble-shooting procedures							M
LUBRICATION							
• Lubricate motor; refer to manufacturer's instruction			E				

JUNCTION CHAMBER AND METER VAULT NO. 1 AND ODOR CONTROL (002; 003; 037)
ODOR CONTROL EXHAUST FANS
002-056-01-0000 AND 002-056-02-0000

MAINTENANCE TASK	FREQUENCY						
	D	W	M	Q	SA	A	O
EXHAUST FAN							
• Check for unusual noise and excessive vibration		O					
• Inspect fan wheels, shafts, housing scroll and side liners for corrosion or abrasive wear. Replace if necessary					M		
• Check all bolts and all connections for tightness					M		
• Clean housing, wheels, louvers, inlet and outlet ductwork of dust and dirt					M		
• Check for worn or damage belt. Replace if necessary					M		
• Clean alignment of sheaves and belt tension					M		
• Clean dampers and check for freedom of movement, corrosion and erosion					M		
• Check alignment of all parts					M		
LUBRICATION							
• Lubricate fan bearings					M		
• Lubricate motor bearings according to the manufacturer's recommendations. Do not over lubricate			E				

JUNCTION CHAMBER AND METER VAULT NO. 1 AND ODOR CONTROL (002; 003; 037)
AIR CONDITIONER
002-051-01-0000

MAINTENANCE TASK	FREQUENCY						
	D	W	M	Q	SA	A	O
AIR CONDITIONING EQUIPMENT							
• Inspect air filters and replace if needed			M				
• Inspect unit coils. Clean if necessary					M		
• Inspect unit casing and accessories for paint chipping or corrosion. If damage is found, clean and repaint						M	
• Clean fan wheels and fan shaft. If rust is found on the fan shaft, remove with emery cloth and recoat						M	
• Check condensate drain line and drain pan for sludge or other foreign material						M	
• Check damper linkage, setscrews and blade adjustment for proper operation						M	
• Check refrigeration system for leaks				M			
• Check thermostat control for proper operation. Refer to manufacturer's literature for instructions							I
• Refer to manufacturer's literature for trouble-shooting procedures							M
• Inspect the activated carbon canister and replace if necessary. Refer to manufacturer's literature for replacing procedure							M
FAN BEARINGS							
• If noises develop, check all bearing races and locking devices for tightness, check the fan for worn bearings and for adequate clearance of rotating members					M		
FAN MOTOR							
• Check for excessive vibration and high temperature			O				
LUBRICATION							
• Lubricate fan bearings. Do not over lubricate. Add grease only while fan is operating					M		
• Lubricate motor in accordance with manufacturer instruction					E		

JUNCTION CHAMBER AND METER VAULT NO. 1 AND ODOR CONTROL (002; 003; 037)
SCREEN ROOM RETURN AIR SUPPLY FAN
002-048-01-0000

MAINTENANCE TASK	FREQUENCY						
	D	W	M	Q	SA	A	O
SUPPLY FANS							
• Check for unusual noise and vibration. If noises develop, check the fan for worn bearings, proper installation and anchoring and for adequate clearance of rotating members							M
LUBRICATION							
• Lubricate fan shaft ball bearings. Add grease with the fan running					M		
NOTE Use low pressure grease gun only.							
• Lubricate motor bearings. Apply grease while motor is running. Do not over grease					M		

JUNCTION CHAMBER AND METER VAULT NO. 1 AND ODOR CONTROL (002; 003; 037)
CHEMICAL METERING PUMPS
002-105-01-0000 THROUGH 002-105-03-0000
AND
002-112-01-0000 THROUGH 002-112-03-0000

MAINTENANCE TASK	FREQUENCY						
	D	W	M	Q	SA	A	O
CHEMICAL METERING PUMP							
• Check unit for excessive noise or vibration	O						
• Clean unit from any dirt or dust			M				
• Refer to manufacturer's literature for trouble shooting procedures							M
• Calibrate the unit as discussed in manufacturer's literature							
LUBRICATION							
• Inspect and fill gear and oil reservoirs			M				
NOTES							
Do not run pump without oil. Do not remove main gear box cover while pump is running. Do not run pump with coupling guard removed. Do not put hands or fingers in gear box or reservoir when pump is running.							

EAST TAMPA PUMPING STATION
AIR COMPRESSORS
130-020-01-0000 AND 130-020-02-0000

MAINTENANCE TASK	FREQUENCY						
	D	W	M	Q	SA	A	O
AIR COMPRESSOR EQUIPMENT							
• Perform overall visual inspection for loose bolts, connections and wiring	O						
• Check the UNIT for unusual noise or excessive vibration	O						
• Clean the unit by wiping it down	O						
• Check foundation bolts tightness						M	
• Check sheave alignment							M
• Check for proper belt tension every 500 hours. Adjust if necessary							M
• Drain accumulated moisture from the strainer; drain all condensate traps	O						
• Inspect and clean, if necessary, crankcase breather					M		
• Clean oil strainer; use nonflammable cleaning solvent						M	
• Drain and clean filter shell; install new oil filter element and add one quart at shell					M		
• Inspect piston ring for wear and free movement						M	
• Check piston rod packing for leaks			M				
• Inspect oil scraper rings for leakage. Replace if necessary			M				
• Inspect cylinder liner for scoring. Replace if necessary, and install new gasket					M		
• Check all safety devices for proper operation					I		
• Inspect pressure switches					E		
• Inspect all valves. Replace faulty parts					M		
• Clean solenoid valves, when leakage occurs. Inspect and replace worn or damaged parts							M
• Clean/change air filter when alarm indicates							M

EAST TAMPA PUMPING STATION
AIR COMPRESSORS
130-020-01-0000 AND 130-020-02-0000

MAINTENANCE TASK	FREQUENCY						
	D	W	M	Q	SA	A	O
AIR COMPRESSOR EQUIPMENT (continued)							
• Change oil separator cartridge when alarm indicates							M
• Change oil filter when alarm indicates or every 2,000 hours							M
• Clean filter mats every 200 service hours, replace if necessary							M
• Check oil cooler and after cooler for contamination every 1,000 hours							M
• Check all electrical screw connections for tightness and tighten if necessary						E	
LUBRICATION							
• Regrease motor bearings with lithium base saponified bearings, grease every 500 hours						E	
• Check oil level and top off if necessary		M					
• Change oil according to manufacturer's recommendations							M

EAST TAMPA PUMPING STATION
STANDBY GENERATOR EQUIPMENT
130-026-01-0000

MAINTENANCE TASK	FREQUENCY						
	D	W	M	Q	SA	A	O
STANDBY GENERATOR EQUIPMENT							
NOTE Following maintenance to be performed before starting engine.							
• Inspect engine, radiator, and generator for debris, loose fittings, leaks and loose components (including governor and fuel system). Repair if necessary		O					
• Check/maintain proper coolant level		O					
• Check block heater for proper operation. Maintain 90 degrees F minimum coolant temperature at all times		O					
• Check battery charger for proper operation		O					
• Clean/check batteries; maintain electrolyte level, ensure tight connections		O					
• Check fuel system for leaks, keep fuel tank full		O					
• Check air cleaner for cleanliness and damage such as rips and tears		O					
NOTE Standard air cleaner is now serviceable and is intended for a maximum of 50 service hours.							
• Inspect all belts for wear, breaks and looseness		O					
• Inspect gauges. Repair or replace any broken gauge		O					
• Inspect governor and control panel loose, broken or damaged wiring or components		O					
NOTE Following maintenance to be performed with engine running.							

EAST TAMPA PUMPING STATION
STANDBY GENERATOR EQUIPMENT
130-026-01-0000

MAINTENANCE TASK	FREQUENCY						
	D	W	M	Q	SA	A	O
STANDBY GENERATOR EQUIPMENT (continued)							
• Inspect engine for leaks, unusual noises and loose connections and generator louvers for proper operation (able to open and close freely)		O					
• Check oil pressure		O					
• Check/record frequency (rpm) and generated voltage of SR4 generator		O					
NOTE Following maintenance to be performed after stopping the engine.							
• Inspect fuel level; refill when below three-fourths full		O					
• Record charging amperage reading from battery charger		O					
• Check automatic switches for proper position to execute autostart		O					
NOTE Following maintenance to be performed before starting the engine.							
• Check coolant level for leaks. Test/add coolant conditioner						M	
• Clean engine crankcase breather						M	
• Check valve lash and adjust if necessary						M	
• Drain water and sediment from fuel tank						M	
• Change fuel filters						M	
• Check and adjust all linkages if necessary						M	
• Test alarms and shutdown devices for proper operation						M	
• Check electrolyte level in batteries, clean terminals and connections						M	

EAST TAMPA PUMPING STATION
STANDBY GENERATOR EQUIPMENT
130-026-01-0000

MAINTENANCE TASK	FREQUENCY						
	D	W	M	Q	SA	A	O
STANDBY GENERATOR EQUIPMENT (continued)							
• Clean engine						M	
• Vacuum clean and check wiring of the regulator, exitor, and starter. Check generator windings with megohmeter and record readings for reference						M	
NOTE Following maintenance to be performed with engine running.							
• Inspect system and gauges for proper operation. After approximately 1 hour of operation, record gauge readings of oil pressure, fuel pressure, oil level, rpm (frequently), generated voltage, service meter, temperature, and engine jacket water temperature						M	
• Inspect engine mounts						M	
• Perform load test (see manufacturer's literature)						M	
• Inspect radiator for leaks and loose connections and louvers for proper operation						M	
NOTE Following maintenance to be performed after stopping engine.							
• Obtain oil sample for analysis						M	
• Record fuel tank level. Fill if below three-fourths full						M	
NOTE Following maintenance to be performed before starting engine.							
• Inspect/check bearing end play and radial clearance on the turbine wheel and shaft of turbocharger every three (3) years							M

EAST TAMPA PUMPING STATION
STANDBY GENERATOR EQUIPMENT
130-026-01-0000

MAINTENANCE TASK	FREQUENCY						
	D	W	M	Q	SA	A	O
STANDBY GENERATOR EQUIPMENT (continued)							
• Drain, clean and flush the cooling system, replace thermostat, refill with coolant solution and conditioner every three (3) years							M
• Replace rubber hoses and belts every three (3) years							M
• Replace batteries every three (3) years							M
• Perform a complete engine adjustment and tune-up every three (3) years							M
NOTE Following maintenance to be performed with engine running.							
• Inspect radiator for leaks and loose connections and louvers for proper operation						M	
• Inspect exhaust system for leaks every three (3) years. Repair or replace defective parts with engine stopped							M
NOTE Following maintenance to be performed after stopping engine.							
• Obtain coolant analysis every three (3) years							M
• Check automatic switches for proper position to execute auto-start		O					
LUBRICATION							
• Lubricate generator bearings						M	
• With engine running, check oil level in engine crankcase. Maintain the oil level between the ADD and full marks on the Engine Running side of the dipstick		O					
• Lubricate all linkage fittings						M	
• Replace engine oil and filters						M	

EAST TAMPA PUMPING STATION
ODOR CONTROL
130-103-01-0000 AND 130-103-02-0000

MAINTENANCE TASK	FREQUENCY						
	D	W	M	Q	SA	A	O
ODOR CONTROL							
• Check compressed air pressure is 56±2 psig	O						
• Check softwater flowrate is 0.25 - 0.75 gpm/nozzle	O						
• Check softwater pressure is 45±4 psig. Adjust softwater pressure regulator if required	O						
• Check the bleach and caustic feed pumps to be sure that they are pumping	O						
• Check the chemical and low level alarm indicator lights	O						
• Record set pints on the daily operation log sheet	O						
• Clean the water rotameter tubes when they become visibly dirty							M
• Clean the atomization nozzle when the softwater pressure goes above 50 psig or once very three (3) weeks, whichever comes first							M
• Refer to manufacturer's literature for specific maintenance procedures and trouble-shooting							M

EAST TAMPA PUMPING STATION
METERING PUMPS
130-105-01-0000, 103-105-02-0000, AND 130-112-01-0000, 130-112-02-0000

MAINTENANCE TASK	FREQUENCY						
	D	W	M	Q	SA	A	O
NaOCl METERING PUMPS							
• Check for assembly leakage at wetted end		M					
• Check pumping action by grasping output line and determining that obvious pulsation is felt during operation		M					
NaOH METERING PUMPS							
• Check for assembly leakage at wetted end		M					
• Check pumping action by grasping output line and determining that obvious pulsation is felt during operation		M					
MURIATIC ACID METERING PUMPS							
• Check for assembly leakage at wetted end		M					
• Check pumping action by grasping output line and determining that obvious pulsation is felt during operation		M					

SLIDE GATE
009-012-01-0000 THROUGH 009-012-04-0000

MAINTENANCE TASK	FREQUENCY						
	D	W	M	Q	SA	A	O
GATE OPERATORS							
Clean geared limit and toque switch					E		
Check limit switch gear box					E		
Check wiring and push button contacts					E		
SLIDE GATE							
Check condition of unit					M		
Operate open/close buttons					M		
Check condition of lubricant					M		
Check stem and stem cover for wear, cracks, etc.					M		

LONGITUDINAL COLLECTORS
009-030-01-0000 THROUGH 009-030-04-0000
082-030-01-0000 THROUGH 082-030-04-0000

MAINTENANCE TASK	FREQUENCY						
	D	W	M	Q	SA	A	O
NOTE Lock off main disconnect switch to collector drive motor before performing maintenance. Follow approved Lockout/Tagout procedures.							
Check shear pin			M				
Check chain and flight operator. Increase tension as needed.			M				
Check oil level in reducer.			M				
Check safety guards and devices, mounting, operation and repair.			M				
Wash down all equipment. Remove debris from components. Keep water away from bearing seals.			M				
Remove shear pin. Replace pin or bushing, if damaged.			M				
Check rotation hub inside drive sprocket.			M				
Lubricate jack shaft bearings per manufacture's specifications.			M				
Check reducer oil for contaminants. Drain, flush and refill if needed with fresh oil.			M				
Check floor and return shoes for wear. Reverse or replace. (Shoes worn to less than 1/8 in must be replaced)			M				
Check flights and reverse or replace floor wear shoes if shoes are scraping tank bottom.			M				
Grease coupling.			M				
ELECTRICAL INSPECTION							
Lubricate motor bearings per manufacture's specifications.					E		
Check general condition of unit.					E		
Check circuit breaker cabinets for wear, corrosion and loose wires.					E		
Check door strip for proper sealing.					E		
Meg motor and check amps against plate.					E		

COLLECTOR FLIGHT DRIVE
082-030-01-0000 THROUGH 082-030-04-0000

MAINTENANCE TASK	FREQUENCY						
	D	W	M	Q	SA	A	O
Drain, flush and refill with new industrial oil.					M		
Check units for oil leaks and general condition.					M		
Lubricate jack shafts.		M					
Inspect for worn or damaged parts or grease coming out of one side of the shaft.		M					

CROSS COLLECTORS
009-031-01-0000 THROUGH 009-031-04-0000
082-031-01-0000 THROUGH 082-031-04-0000

MAINTENANCE TASK	FREQUENCY						
	D	W	M	Q	SA	A	O
NOTE Lock off main disconnect switch to collector drive motor before performing maintenance. Follow approved Lockout/Tagout procedures.							
Check shear pin			M				
Check chain and flight operator. Increase tension as needed.			M				
Check oil level in reducer.			M				
Check safety guards and devices, mounting, operation and repair.			M				
Wash down all equipment. Remove debris from components. Keep water away from bearing seals.			M				
Remove shear pin. Replace pin or bushing, if damaged.			M				
Check rotation hub inside drive sprocket.			M				
Lubricate jack shaft bearings per manufacture's specifications.			M				
Check reducer oil for contaminants. Drain, flush and refill if needed with fresh oil.			M				
Check floor and return shoes for wear. Reverse or replace. (Shoes worn to less than 1/8 in must be replaced)			M				
Check flights and reverse or replace floor wear shoes if shoes are scraping tank bottom.			M				
Grease coupling.			M				
ELECTRICAL INSPECTION							
Lubricate motor bearings per manufacture's specifications.					E		
Check general condition of unit.					E		
Check circuit breaker cabinets for wear, corrosion and loose wires.					E		
Check door strip for proper sealing.					E		
Meg motor and check amps against plate.					E		

COLLECTOR FLIGHT DRIVE
082-031-01-0000 THROUGH 082-031-04-0000

MAINTENANCE TASK	FREQUENCY						
	D	W	M	Q	SA	A	O
Drain, flush and refill with new industrial 220 oil.					M		
Check units for oil leaks and general condition.					M		
Lubricate jack shafts.		M					
Inspect for worn or damaged parts or grease coming out of one side of the shaft.		M					

PRIMARY TANKS
009-127-01-0000 THROUGH 009-127-04-0000

MAINTENANCE TASK	FREQUENCY						
	D	W	M	Q	SA	A	O
FLIGHTS AND CHAINS							
Check all link pins, pusher links, flight boards, wear shoes, sprockets and wear strips for wear and looseness.						M	
Check chain tension and adjust. Remove links as required to achieve proper tension.						M	

SCUM SKIMMER MECHANISM
082-174-01-0000 THROUGH 082-174-08-0000

MAINTENANCE TASK	FREQUENCY						
	D	W	M	Q	SA	A	O
TIPPING WEIR							
Grease button head fittings using Siloo grease			M				
Exercise weir through full travel of operation			M				
Check hand wheel and hold down clamp for proper installation and adjustment.			M				

GENERAL ELECTRICAL
009-192-01-0000
082-192-01-0000

MAINTENANCE TASK	FREQUENCY						
	D	W	M	Q	SA	A	O
Check and repair inside and outside lighting circuits and fixtures					E		
Check light switches and lamp covers					E		
Check duplex receptacles and covers					E		
Check light and control transformers, capacitors and fuses					E		
Check special purpose receptacles and covers					E		
Check conduit, J boxes, covers and gaskets for rust or damage					E		
Check for vibration and undo noise. Clean fan blades.					E		

RTU #6
082-201-01-0000

MAINTENANCE TASK	FREQUENCY						
	D	W	M	Q	SA	A	O
CPU BATTERY							
Pull A/C power supply and check back-up battery system.					I		
Check battery for proper voltage and amperage.					I		
Check to see no program is lost.					I		

DEWATERNG PUMPS
083-017-01-0000 AND 083-017-02-0000

MAINTENANCE TASK	FREQUENCY						
	D	W	M	Q	SA	A	O
Check pumps for noise, vibration, leaks, bindings and temperature					M		
Check impeller for wear, clear foreign material					M		
Check stator and upper shaft seal as per manufacturer's schedule							M
Check lower shaft seal and oil as per manufacturer's schedule							M
Check pump cable, cable motor entry and grommets					M		
Check pump rails for corrosion and bracket fit					M		
Change oil every 4000 hours or once per year						M	
Check voltage output, record reading, meg motor and record					E		
Take amp reading and record					E		
Record hour meter reading					E		
Visually check motor cord for wear or damage					E		
Check J-box under cabinet					E		

RAW SLUDGE PUMPS
083-034-01-0000 AND 083-034-02-0000

MAINTENANCE TASK	FREQUENCY						
	D	W	M	Q	SA	A	O
Check pumps for noise, vibration, leaks, bindings and temperature					M		
Check impeller for wear, clear foreign material					M		
Check stator and upper shaft seal as per manufacturer's schedule					M		
Check lower shaft seal and oil as per manufacturer's schedule							M
Check pump cable, cable motor entry and grommets							M
Check pump rails for corrosion and bracket fit					M		
Change oil every 4000 hours or once per year						M	
Check voltage output, record reading, meg motor and record					E		
Take amp reading and record					E		
Record hour meter reading					E		
Visually check motor cord for wear or damage					E		
Check J-box under cabinet					E		

EXHAUST FAN
020-056-01-0000

MAINTENANCE TASK	FREQUENCY						
	D	W	M	Q	SA	A	O
Check fan for noise and vibration					M		
Check bearings, anchoring and blade clearance					M		
Check belt tension and wear					M		
Lubricate fan shaft bearings with fan running using low pressure lube gun					M		
Observe operation of motor. Check for vibration, noise or excess heat					E		
Lubricate motor bearings					E		

RAW SLUDGE PUMPS
020-034-01-0000 AND 020-034-02-0000

MAINTENANCE TASK	FREQUENCY						
	D	W	M	Q	SA	A	O
Check seal, seal water flow and rotometer			M				
Lube shaft bearings. Do not over-lubricate			M				
Check belts for tightness			M				
Check pulleys for wear			M				
Check belt guard			M				
Observe operation of motor. Check for vibration, noise or excess heat					E		
Lubricate motor bearings					E		

PLANT WATER PUMP
020-022-01-0000 AND 020-022-02-0000

MAINTENANCE TASK	FREQUENCY						
	D	W	M	Q	SA	A	O
Check alignment coupling and shaft					M		
Check pump bearing temperature (max 200 degrees)					M		
Lube bearings					M		
Observe operation of motor. Check for vibration, noise or excess heat					E		
Lubricate motor bearings					E		

AIR COMPRESSOR
020-020-01-0000

MAINTENANCE TASK	FREQUENCY						
	D	W	M	Q	SA	A	O
Check compressor operation, note start/stop pressure settings			M				
Check for noise, vibration, air or oil leaks			M				
Check compressor intake filters			M				
Check belts for tension, excess wear and alignment			M				
Check belt guards, secure mounting hardware			M				
Check line or dryer and filters for contamination			M				
Check supply pressure regulator for correct operating pressure			M				
Observe operation of motor. Check for vibration, noise or excess heat					E		
Lubricate motor bearings					E		

SUMP PUMP
020-008-01-0000
084-008-01-0000 AND 084-008-02-0000

MAINTENANCE TASK	FREQUENCY						
	D	W	M	Q	SA	A	O
Check pumps for noise, vibration, leaks, bindings and temperature					M		
Check sump for foreign objects, grit buildup and floor drain stoppages					M		
Check operation of discharge, check valves, and controls					M		
Check coupling wear and alignment					M		
Observe operation of motor. Check for vibration, noise or excess heat					E		
Lubricate motor bearings					E		

MOTOR CONTROL CENTER
020-190-01-0000 AND 083-190-01-0000

MAINTENANCE TASK	FREQUENCY						
	D	W	M	Q	SA	A	O
Test all electrical "cans" within the MCC			E				
Tighten all loose connections as per the torque specifications for nut, bolt and wire size			E				
Take photographs of all units that show signs of "Hot Spots" for future reference			E				

MIXED SLUDGE PUMPS
071-153-01-0000, 071-153-02-0000, AND 071-153-03-0000

MAINTENANCE TASK	FREQUENCY						
	D	W	M	Q	SA	A	O
MIXED SLUDGE PUMPS							
• Check for unusual noise and excessive vibration	O						
• Check bearing temperature; bearing temperature should not be above 225 degrees F.	O	M					
NOTES Operators are required to manually check the temperature of bearings daily Mechanical Maintenance Personnel are required to check the temperature of bearings with a temperature sensing device, as recommended by the manufacturer weekly							
• Check mechanical seal for leakage	O						
• Replace mechanical seal if required. Refer to manufacturer's literature for procedure							M
• Check for misalignment of coupling and shaft						M	
• Check shaft and shaft sleeve for scoring						M	
• Check coupling for wear						M	
• Refer to manufacturer's literature for trouble-shooting procedures							M
MOTOR							
• Check for unusual noise, excessive vibration and any other abnormal conditions	O						
• Check for excessive vibration, unusual noise and temperature	O						
• Check terminal connections, assembly screws, bolts and nuts for tightness						E	

MIXED SLUDGE PUMPS
071-153-01-0000, 071-153-02-0000, and 071-153-03-0000 (cont.)

MAINTENANCE TASK	FREQUENCY						
	D	W	M	Q	SA	A	O
MOTOR (cont.)							
• Examine starter, switch, fuses and other control		I					
• Test insulation resistance of motor winding. Refer to manufacturer's literature for instruction						E	
• Clean the motor inside and outside. Use dry compressed air for dust and dry dirt and mineral spirits for accumulated sticky dirt and grease		M					
NOTE Do not use gasoline or other inflammable solvents.							
LUBRICATION							
• Check oil level in reservoir for intermediate bearings; replenish	O						
• Replace oil in reservoir					O		

ELECTRIC MONORAIL HOIST
071-009-01-0000

MAINTENANCE TASK	FREQUENCY						
	D	W	M	Q	SA	A	O
ELECTRIC HOIST							
• Check operation of brakes for excessive dirt			O				
• Check operation of limit switch			O				
• Check reeving for kinks, unstranding, broken wires and corrosion. Replace as necessary			O				
• Lubricate drum drive spline			O				
• Lubricate hoist gear case, trolley gear case and crane gear case. Drain and refill					O		
• Lubricate hoisting cable			O				
• Lubricate bearings			O				
• Lubricate open gearing			O				
NOTE Refer to the manufacturer's literature for recommended lubricants.							
• Remove, inspect and clean magnetic disc plate and linings. Replace if necessary				M			
• Check for loose bolts and/or connections on both hoist/trolley and suspension system					M		
• Lubricate all flexible couplings					O		
• Check all load carrying parts such as sheaves, drums, bottom blocks, wheel pins, frames, and suspension bolts for wear, cracks, distortion or sign of overload. Replace or tighten secure as required					M		
• Refer to manufacturer's literature for trouble-shooting procedures.							M
CABLE REEL							
• Check all fasteners and hardware for tightness			O				

ELECTRIC MONORAIL HOIST
071-009-01-0000 (cont.)

MAINTENANCE TASK	FREQUENCY						
	D	W	M	Q	SA	A	O
CABLE REEL (cont.)							
• Check rollers on cable guides to keep them free-running			O				
• Check the brushes on the collector ring. Remove dirt, oxidation, or other contaminants							O
NOTE Collector ring inspections should be made after every 200-400 hours of operation under normal conditions.							

PLANT WATER SYSTEM PUMPS
071-022-01-0000 THROUGH 071-022-03-0000

MAINTENANCE TASK	FREQUENCY						
	D	W	M	Q	SA	A	O
PLANT WATER SYSTEM PUMPS NOTE No maintenance other than periodic inspection and occasional cleaning is required. The liquid end of the pump is lubricated by the fluid being pumped and therefore does not require periodic lubrication. Refer to manufacturer's literature for lubrication requirements for impeller shaft bearings. The motor may require lubrication, in which case the motor manufacturer's recommendation should be followed.							

SUMP PUMPS
071-008-01-0000 AND 071-008-02-0000

MAINTENANCE TASK	FREQUENCY						
	D	W	M	Q	SA	A	O
SUMP PUMP							
• Check operating temperature of motor bearings; bearing temperature should not be above 200 degrees F	O	M					
NOTES Operators are required to manually check the temperature of motor bearings daily. Mechanical Maintenance Personnel are required to check the temperature of motor bearings with a temperature sensing device as recommended by the motor manufacturer weekly.							
• Check for unusual noise and excessive vibration; refer to manufacturer's literature for cause and corrective action	O						
• Check impeller clearance; adjust as required					M		
• Check coupling for wear and replace if necessary					M		
• Check for misalignment of coupling and shaft					M		
• Check water lubrication line for damage and tightness					M		
• Refer to manufacturer's literature for trouble-shooting procedures							M
LUBRICATION							
• Check oil level in reservoir for intermediate bearings; replenish	O						
• Lubricate thrust bearings in motor bracket as recommended by the manufacturer			E				

ANAEROBIC DIGESTION FACILITIES (028, 029)
SLUDGE GAS MIXING COMPRESSORS
028-019-01-0000 THROUGH 028-019-06-0000
029-019-01-0000 THROUGH 029-019-02-0000

MAINTENANCE TASK	FREQUENCY						
	D	W	M	Q	SA	A	O
SLUDGE GAS MIXING COMPRESSOR							
• Check for unusual noise and excessive vibration	O						
• Check bearing temperature; bearing temperature should not be 120 degrees F above the surrounding temperature	O	M					
NOTES							
Operators are required to manually check the temperature of bearings daily.							
Mechanically Maintenance Personnel are required to check the temperature of bearings with a temperature sensing device, as recommended by the manufacturer weekly.							
• Check seal water piping line for leaks and damage				M			
• Clean bearing housing and bearings. Use kerosene or mineral spirits. Repack with clean ball-bearing grease.						M	
• Check belt tension. Adjust if necessary.				M			
• Inspect belt. Replace if broken or frayed.				M			
• Refer to manufacturer's literature for trouble-shooting procedures							M
MOTOR							
• Check for unusual noise, excessive vibration and any other abnormal conditions	O						
• Check operation temperature of motor bearing; bearing temperature should not be 120 degrees F above the surrounding temperature	O	M					
NOTES							
Operators are required to manually check the temperature of bearings daily.							
Mechanically Maintenance Personnel are required to check the temperature of bearings with a temperature sensing device, as recommended by the manufacturer weekly.							

ANAEROBIC DIGESTION FACILITIES (028, 029)
SLUDGE GAS MIXING COMPRESSORS
028-019-01-0000 THROUGH 028-019-06-0000
029-019-01-0000 THROUGH 029-019-02-0000

MAINTENANCE TASK	FREQUENCY						
	D	W	M	Q	SA	A	O
MOTOR (cont.)							
• Check terminal connections, assembly screws, bolts and nuts for tightness						E	
• Examine starter, switches, fuses and other controls		I					
• Test insulation resistance of motor winding. Refer to manufacturer's literature for instruction						E	
• Clean the motor inside and outside. Use dry compressed air for dust and dry dirt and mineral spirits for accumulated sticky dirt and grease		M					
NOTE							
Do not use gasoline or other inflammable solvents.							
LUBRICATION							
• Lubricate motor bearings in accordance with manufacturer recommendation. Do not over grease							E

ANAEROBIC DIGESTION FACILITIES (028, 029, 074)
SLUDGE CIRCULATING PUMPS
028-035-01-0000 THROUGH 028-035-04-0000
029-035-01-0000 THROUGH 029-035-02-0000
074-035-01-0000 THROUGH 074-035-04-0000

MAINTENANCE TASK	FREQUENCY						
	D	W	M	Q	SA	A	O
SLUDGE CIRCULATING PUMPS							
• Check for unusual noise and excessive vibration	O						
• heck bearing temperature; bearing temperature should not be 120 degrees F above the surrounding temperature	O	M					
NOTES Operators are required to manually check the temperature of bearings daily. Mechanically Maintenance Personnel are required to check the temperature of bearings with a temperature sensing device, as recommended by the manufacturer weekly.							
• Check packing, replace if leaking excessively	O						M
• Clean bearing housing and bearings. Use kerosene or mineral spirits. Repack with clean ball-bearing grease. Check that water slingers are in correct places						M	
• Check for misalignment of coupling and shaft						M	
• Check shaft and shaft sleeve for scoring						M	
• Check coupling for wear						M	
• Refer to manufacturer's literature for trouble-shooting procedures							M
• Check water seal piping for damage and tightness					M		
MOTOR							
• Check for unusual noise, excessive vibration and any other abnormal conditions	O						
• Check operating temperature of motor bearings; bearing temperature should not be 120 degrees F above the surrounding temperature	O	M					

ANAEROBIC DIGESTION FACILITIES (028, 029, 074)
SLUDGE CIRCULATING PUMPS
028-035-01-0000 THROUGH 028-035-04-0000
029-035-01-0000 THROUGH 029-035-02-0000
074-035-01-0000 THROUGH 074-035-04-0000

MAINTENANCE TASK	FREQUENCY						
	D	W	M	Q	SA	A	O
MOTOR (cont.)							
NOTES							
Operators are required to manually check the temperature of bearings daily.							
Mechanically Maintenance Personnel are required to check the temperature of bearings with a temperature sensing device, as recommended by the manufacturer weekly.							
• Check terminal connections, assembly screws, bolts and nuts for tightness						E	
• Examine starter, switch, fuses and other control		I					
• Test insulation resistance of motor winding. Refer to manufacturer's literature for instruction						E	
• Clean the motor inside and outside. Use dry compressed air for dust and dry dirt and mineral spirits for accumulated sticky dirt and grease		M					
NOTE							
Do not use gasoline or other inflammable solvents							
LUBRICATION							
• Lubricate bearings of coupling through grease fittings in accordance with manufacturer's recommended procedure					E		
• Lubricate motor bearings in accordance with manufacturer recommendation. Do not over grease.							E

ANAEROBIC DIGESTION FACILITIES (028, 029, 074)
DIGESTED SLUDGE PUMPS
028-085-01-0000, 028-085-02-0000, 029-085-01-0000
074-085-01-0000 THROUGH 074-085-04-0000

MAINTENANCE TASK	FREQUENCY						
	D	W	M	Q	SA	A	O
DIGESTED SLUDGE PUMP							
• Check for unusual noise and excessive vibration; refer to manufacturer's literature for cause and corrective action	O						
• Check temperature of stuffing box, if overheating, packing may be too tight and is not allowing proper leakage of flushing water of 1-2 drops per minute							
NOTE Do not over tighten packing. Damage to shaft will occur. Refer to manufacturer's literature for instructions							
• Check operating temperature of motor bearings; bearing temperature should not be 120 degrees F above the surrounding temperature	O	M					
NOTES Operators are required to manually check the temperature of bearings daily. Mechanically Maintenance Personnel are required to check the temperature of bearings with a temperature sensing device, as recommended by the manufacturer weekly.							
• Check packing, all gaskets and "O" rings; replace if necessary						M	
• Clean motor. Use mineral spirit			E				
• Replace or replenish oil in hydraulic drive. Refer to manufacturer's literature for instructions.							M
• Check alignment of pump, drive and motor					M		
• Check water seal piping for damage and tightness					M		
• Refer to manufacturer's literature for trouble-shooting procedures							

ANAEROBIC DIGESTION FACILITIES (028, 029, 074)
DIGESTED SLUDGE PUMPS
028-085-01-0000, 028-085-02-0000, 029-085-01-0000
074-085-01-0000 THROUGH 074-085-04-0000

MAINTENANCE TASK	FREQUENCY						
	D	W	M	Q	SA	A	O
LUBRICATION							
• Lubrication pump bearings. Do not over grease			M				
• Inspecting bearing grease for contamination with water or sludge. If necessary, drain old grease from the bearing housing, wash the bearing shaft assembly with clean bensine and refill. Add a few drops of oil to bearing seals before remounting assembly				M			
• Lubricate motor bearings in accordance with manufacturer's recommendation. Do not over grease.							E

ANAEROBIC DIGESTION FACILITIES (028, 029, 074)
SLUDGE HEAT EXCHANGER
028-136-01-0000 AND 028-136-02-0000
029-136-01-0000
074-136-01-0000 AND 074-136-02-0000

MAINTENANCE TASK	FREQUENCY						
	D	W	M	Q	SA	A	O
SLUDGE HEAT EXCHANGER							
• Manually inspect the pressure gauges at the sludge inlet and outlet of the heat exchangers.		O					
• If sludge pressure gauges indicate a differential pressure of more than 4.3 psi. The sludge tubes will need to be reamed and cleaned. Refer to manufacturer's instructions.							M
• Check for loose connections or leakage		O					
• Check for corrosion. Repair if necessary		O					

ANAEROBIC DIGESTION FACILITIES (028, 074)
DUAL FUEL WATER HEATERS
028-034-01-0000 AND 028-134-02-0000
074-134-01-0000 AND 074-134-02-0000

MAINTENANCE TASK	FREQUENCY						
	D	W	M	Q	SA	A	O
DUAL FUEL WATER HEATER							
• Check and clean pilot					M		
• Check all safety relief valves			O				
• Check thermostat operation		O					
• Check diesel fuel supply						O	
• Refer to manufacturer's literature for complete maintenance requirements							

ANAEROBIC DIGESTION FACILITIES (031, 079)
WASTE SLUDGE GAS BURNERS
033-169-01-0000 AND 033-169-02-0000
079-169-01-0000 AND 079-169-02-0000

MAINTENANCE TASK	FREQUENCY						
	D	W	M	Q	SA	A	O
WASTE SLUDGE GAS BURNERS							
• Visually inspect waste sludge gas burner using the inspection port to assure that waste sludge gas forms a complete ring around orifice when burning. Clean if necessary per manufacturer's instructions				M			

ANAEROBIC DIGESTION FACILITIES (028, 029)
SLUDGE METERING EQUIPMENT
028-036-01-0000 AND 029-036-01-0000

MAINTENANCE TASK	FREQUENCY						
	D	W	M	Q	SA	A	O
SLUDGE METERING EQUIPMENT							
• Check for proper operation of metering system. Perform static test of line power, reference and control signal, current output, magnetic drive and coils, ultrasonic generators and metering electrodes					I		
• Replace metering tube if meter electrode assemblies are corroded or shorted and liner is worn; after reinstallation perform alignment procedure							I
• Perform dynamic performance check to verify accuracy and proper performance of electronic circuitry of flow converter. If accuracy is not within specified tolerance recalibrate converter					I		
• For detailed checking and replacement procedures of metering system refer to manufacturer's literature							I
• Refer to manufacturer's literature for trouble-shooting procedures							I

ANAEROBIC DIGESTION FACILITIES (028, 029, 033)
SLUDGE GAS METERING EQUIPMENT
028-036-02-0000, 028-036-03-0000
029-036-02-0000 AND 033-036-01-0000

MAINTENANCE TASK	FREQUENCY						
	D	W	M	Q	SA	A	O
SLUDGE GAS METERING EQUIPMENT							
• Check for leaks on all connections	O						
• Check the pressure sensor balance and operation as recommended by manufacturer					I		
• Clean the pressure sensor orifices and nozzles with the cleaning pins					I		
• Check the output at zero flow as recommended by manufacturer					I		
• Refer to manufacturer's literature for trouble-shooting procedures							I
• For detailed maintenance procedures of instrumentation equipment refer to manufacturer's literature							I
TRANSMITTER							
• Check calibration and operation as recommended by manufacturer					I		
• Check zero adjustment					I		

ANAEROBIC DIGESTION FACILITIES (028)
CONDENSATE COLLECTORS
028-150-01-0000 THROUGH 028-150-04-0000

MAINTENANCE TASK	FREQUENCY						
	D	W	M	Q	SA	A	O
CONDENSATE COLLECTORS							
• Check condensate collector and connections for leakage or corrosion. Repair if necessary	O						M
• Visually inspect condensate collector through inspection pipe to determine amount of accumulated sediment. Refer to manufacturer's instructions for cleaning	O						M

ANAEROBIC DIGESTION FACILITIES (028, 074)
CONDENSATE TANKS
028-150-01-0000 AND 028-150-02-0000;
074-151-01-0000 AND 074-151-02-0000

MAINTENANCE TASK	FREQUENCY						
	D	W	M	Q	SA	A	O
CONDENSATE TANKS							
• Visually inspect condensate level in the condensate tank using the sight glass provided	O						
• Check internal pressure of tank by observing the pressure gauge	O						
• After high condensate level float switch has engaged alarm, drain condensate tank							O
• Check condensate tank and connections for leakage or corrosion. Repair if necessary							M
• Check condensate drain line for sludge or other foreign material							M

ANAEROBIC DIGESTION FACILITIES (028, 029)
COMBUSTIBLE GAS DETECTION SENSORS
028-044-01-0000 THROUGH 028-044-03-0000, AND 029-044-01-0000

MAINTENANCE TASK	FREQUENCY						
	D	W	M	Q	SA	A	O
COMBUSTIBLE GAS DETECTION SENSORS							
• Test and adjust alarm and warning points in accordance with the manufacturer's recommendation				I			
• Check alarm circuit				I			
• Check the calibration				I			

ANAEROBIC DIGESTION FACILITIES (028, 029, 074)
SUMP PUMP
028-008-01-0000 AND 029-008-01-0000
074-008-01-0000 AND 074-008-02-0000

MAINTENANCE TASK	FREQUENCY						
	D	W	M	Q	SA	A	O
SUMP PUMP							
• Check operating temperature of motor bearings; bearing temperature should not be above 200 degrees F	O	M					
NOTES							
Operators are required to manually check the temperature of bearings daily.							
Mechanically Maintenance Personnel are required to check the temperature of bearings with a temperature sensing device, as recommended by the motor manufacturer's weekly.							
• Check for unusual noise and excessive vibration; refer to manufacturer's literature for cause and corrective action	O						
• Check impeller clearance; adjust as required					M		
• Check coupling for wear and replace if necessary					M		
• Check for misalignment of coupling and shaft					M		
• Check water lubrication line for damage and tightness					M		
• Refer to manufacturer's literature for trouble-shooting procedures							M
LUBRICATION							
• Check oil level in reservoir for intermediate bearings; replenish	O						
• Lubricate thrust bearings in motor bracket as recommended by the manufacturer			E				

ANAEROBIC DIGESTION FACILITIES (028)
HOISTING EQUIPMENT
028-009-01-0000

MAINTENANCE TASK	FREQUENCY						
	D	W	M	Q	SA	A	O
HOISTING EQUIPMENT							
• Check all functional operating mechanisms for any maladjustments that may interfere with proper operation							
• Check that warning labels, push button markings or capacity markings have not been removed or are illegible							
• Check bolts, nuts and rivets for tightness							
• Check brake system for excessive wear and drift							
• For detailed maintenance procedures, refer to manufacturer's literature							
HOOKS							
• Check for deformation and chemical damage			M				
• Check throat opening; replace if bent from normal opening			M				
• Check for twists of hook eye or hook; replace if twisted			M				
• Check if hook eye or hook is bent; replace if bent			M				
• Check for hinge action wear at point of contact and elongation of hook eye			M				
LOAD BEARING CABLE							
• Check load bearing cable for wear, twist, distortion, kinks, strand breaks, improper dead ending; replace cable if conditions described above are excessive			M				
LUBRICATION							
• Check gear oil; maintain level at oil bath			M				
• Lubricate bearings through a grease fitting					M		
• Lubricate shafts					M		

ANAEROBIC DIGESTION FACILITIES (028)
VENTILATION EQUIPMENT
028-050-01-0000 THROUGH 028-050-04-0000

MAINTENANCE TASK	FREQUENCY						
	D	W	M	Q	SA	A	O
VENTILATION EQUIPMENT							
• If noises develop, check the fan for worn bearings, proper installation and anchoring and for adequate clearance of rotating members							M
• Check condition of V-belt; replace if necessary					M		
• Check V-belt tension. If adjustment is made, check pulley alignment					M		
LUBRICATION							
• Lubricate fan shaft ball bearings. Add grease with the fan running					M		
NOTE Use low pressure grease gun only.							
• Lubricate motor bearings. Apply grease while motor is running. Do not over grease.					E		

ANAEROBIC DIGESTION FACILITIES (079)
PRESSURE RELIEF AND FLAME TRAP ASSEMBLY
079-129-01-0000 AND 079-129-02-0000

MAINTENANCE TASK	FREQUENCY						
	D	W	M	Q	SA	A	O
PRESSURE RELIEF AND FLAME TRAP ASSEMBLY							
• Inspect internal parts, including fusible element on schedule or at any time it is known that a flash-back has occurred or that severe heat has been applied externally to valve; clean valve internals as part of inspection					M		
• Inspect flame arrester bank sheets for corrosion and contamination; clean or replace as required					M		
• Refer to manufacturer's literature for trouble-shooting							M

ANAEROBIC DIGESTION FACILITIES (028, 072, 079)
FLAME TRAP ASSEMBLY
028-128-01-0000 THROUGH 028-128-06-0000
072-128-01-0000 THROUGH 072-128-04-0000
074-128-01-0000

MAINTENANCE TASK	FREQUENCY						
	D	W	M	Q	SA	A	O
FLAME TRAP ASSEMBLY							
• Inspect internal parts, including fusible element on schedule or at any time it is known that a flash-back has occurred or that severe heat has been applied externally to valve; clean valve internals as part of inspection					M		
• Inspect flame arrester bank sheets for corrosion and contamination; clean or replace as required					M		
• Refer to manufacturer's literature for trouble-shooting							M

ANAEROBIC DIGESTION FACILITIES (021, 072)
DIGESTER FLOATING COVERS
021-149-01-0000 THROUGH 021-149-05-0000
072-149-01-0000 AND 072-149-02-0000

MAINTENANCE TASK	FREQUENCY						
	D	W	M	Q	SA	A	O
DIGESTER FLOATING COVERS							
• Lubricate roller assemblies				M			
• Inspect all portions of cover; tighten any loose fasteners or anchor bolts; wire brush or sandblast any areas where paint is loose or chipped or rust shows, and touch up paint				M			
• At any time a digestion tank is taken out of service, inspect cover ceiling and attic space; tighten any loose fasteners; wire brush or sandblast any areas where paint is chipped or loose or rust shows, and touch up paint							M

ANAEROBIC DIGESTION FACILITIES (074)
MAGNETIC FLOW METERS
074-036-01-0000 THROUGH 074-036-06-0000

MAINTENANCE TASK	FREQUENCY						
	D	W	M	Q	SA	A	O
MAGNETIC FLOW METERS							
• Visually inspect inner walls of meter and clean as required; inspect metering electrodes							I
• Replace metering tube if meter electrode assemblies are corroded or shorted and liner is worn; after reinstallation, perform alignment procedure							I
• Verify meter calibration per manufacturer's literature; recalibrate as necessary					I		
• Refer to manufacturer's literature for trouble-shooting							I

ANAEROBIC DIGESTION FACILITIES (072, 074)
GAS PRESSURE REGULATING VALVE
072-130-01-0000 AND 072-130-02-0000
074-130-01-0000

MAINTENANCE TASK	FREQUENCY						
	D	W	M	Q	SA	A	O
GAS PRESSURE REGULATING VALVE							
• Remove cover over linkage and inspect for ease of operation when weight arm is manually moved				M			
• Refer to manufacturer's literature for trouble-shooting							M

ANAEROBIC DIGESTION FACILITIES (072, 074, 079)
EXPLOSION RELIEF VALVE
072-126-01-0000 AND 072-126-02-0000
074-126-01-0000
079-126-01-0000 AND 079-126-02-0000

MAINTENANCE TASK	FREQUENCY						
	D	W	M	Q	SA	A	O
EXPLOSION RELIEF VALVE							
• Inspect for leaks or loose fasteners			M				
• Remove pallets and inspect and clean; inspect seat insert (frequency of inspection will be determined by experience)				M			

ANAEROBIC DIGESTION FACILITIES (072)
DIGESTER COVER POSITION INDICATOR
072-165-01-0000 AND 072-165-02-0000

MAINTENANCE TASK	FREQUENCY						
	D	W	M	Q	SA	A	O
DIGESTER COVER POSITION INDICATOR							
• Check all visible components for loose fastgeners; for kinked, frayed or rusted cables; and for cable operability		O					
• Check wiring for damaged insulation; check wiring terminations and tighten if necessary				I-E			
• Check limit switches for operability, and clean				I-E			

ANAEROBIC DIGESTION FACILITIES (074)
BOILER BOOSTER PUMPS
074-135-01-0000 AND 074-135-02-0000

MAINTENANCE TASK	FREQUENCY						
	D	W	M	Q	SA	A	O
BOILER BOOSTER PUMPS							
• Check pump and motor for vibration and overheating	O						
• Check seal and replace as necessary					M		
• Check shaft or shaft sleeve for scoring					M		
• Lubricate motor bearings					M		
• Refer to manufacturer's literature for trouble-shooting							E-M

JUNCTION CHAMBER NO. 3 (008)
MIXING EQUIPMENT
008-028-01-0000 AND 008-028-02-0000

MAINTENANCE TASK	FREQUENCY						
	D	W	M	Q	SA	A	O
MIXER							
• Check for unusual noise and excessive vibration	O						
• Inspect impeller for material build-up.		O					
• Clean breather in a solvent					O		
• Check coupling alignment					M		
• Lubricate motor bearings. Apply grease while motor is running. Do not over grease.					M		
• Check for worn and loose bearings and gear. Replace if necessary					M		
• Tighten all mounting and coupling bolts					M		
• Check for oil leaks	O						
• Refer to manufacturer's literature for trouble-shooting procedures							M
MOTOR							
• Tighten assembly screws, bolts, nuts and terminal connections					M		
• Check operating temparture of motor bearings thermometer. Bearing temperature should be less than 200 degress F	O	M					
NOTES Operators are required to manually check the temperature of motor bearings daily. Mechanical Maintenance Personnel are required to check the temperature of motor bearings with a temperature sensing device, as recommended by the motor manufacturer, weekly.							
• Check insulation resistance of motor. If the resistance is lower than one megohm the windings should be dried					E		
• Clean windings using compressed air to remove dust and cleaning volatile solvent to remove grease and other adherent substances						E	

JUNCTION CHAMBER NO. 3 (008)

MIXING EQUIPMENT
008-028-01-0000 AND 008-028-02-0000

MAINTENANCE TASK	FREQUENCY						
	D	W	M	Q	SA	A	O
NOTE Do not use gasoline or other inflammable solvents.							
LUBRICATION							
• Check oil levels, replenish if required		O					
• Lubricate bearings, couplings and seals				M			
• Check oil and grease for contamination					M		
• Change oil and add grease				M			
• Lubricate electric motor in accordance with manufacturer's recommendation				E			

SCREEN AND GRIT BUILDING NO. 1 (059)
MECHANICAL SEWAGE SCREENS
059-001-01-0000 THROUGH 059-001-03-0000

MAINTENANCE TASK	FREQUENCY						
	D	W	M	Q	SA	A	O
BAR SCREEN							
• Clean motor and reducer							M
• Clean cog rails and cog wheels in accordance with manufacturer's recommendation						M	
• Check drive and rake carriage for proper operation	O						
• Make sure bubbler tube is free of solids and/or suspended matter			M				
• Check cables and track for damage			M				
• Inspect brake system according to manufacturer's recommendation			M				
• Check cog rails, cog wheels and guide rollers for wear			M				
• Check cog rail side rails for damage			M				
• Check rake carriage arm and teeth for wear			M				
• Check wiper blade for proper operation and wipe blade for wear			M				
• Check grabber unit and clean in accordance with manufacturer's recommendation						M	
• Completely disassemble drive mechanism and clean parts in accordance with manufacturer's recommendation- every 3 yrs							M
LUBRICATION							
• Check drive system oil level		M					
• Change drive system oil in accordance with manufacturer's recommendation							M
• Lubricate cog rails and cog wheels in accordance with manufacturer's recommendations							M
• Lubricate electric motor in accordance with manufacturer's recommendations			E				

SCREEN AND GRIT BUILDING NO. 1 (059)
SCREEN CONVEYOR
059-002-01-0000

MAINTENANCE TASK	FREQUENCY						
	D	W	M	Q	SA	A	O
CONVEYOR							
• Check conveyor idlers, shafts, etc. thoroughly for accumulation of screenings or dirt deposits			O				
• Check alignment of sprockets, shafts and belt drive pulleys					M		
• Check for excessive wear of sprockets teeth and chain; replace if necessary					M		
• Maintain proper chain slack					M		
• Remove and overhaul worn or damaged idlers, wash all parts with solvent							M
• Check drive shaft seal; replace if necessary					M		
• Maintain proper tension of drive belt							M
• Check for worn drive belt and pulleys; replace if necessary					M		
• Refer to manufacturer's literature for trouble-shooting procedures							M
LUBRICATION							
• Check the speed reducer for proper oil level in reservoir; replenish			M				
• Check for condensation in oil, if there is any water present, drain unit completely and refill					M		
• Check proper level at oil well in chain case. Drain settled water			M				
• Lubricate idlers and fill center tube with grease			M				
• Lubricate motor bearings; do not over grease					E		

SCREEN AND GRIT BUILDING NO. 1 (059)
GRIT COLLECTORS
059-003-01-0000 THROUGH 059-03-04-0000

MAINTENANCE TASK	FREQUENCY						
	D	W	M	Q	SA	A	O
GRIT COLLECTOR MECHANISM							
• Check and tighten all bolts and nuts							M
• Check all parts for excessive wear and replace worn sections					M		
• Test overload alarm for proper function		M					
NOTE For replacement faulty parts of overload alarms refer to manufacturer's literature.							
• Paint entire mechanism above and below water line						M	
DRIVE ASSEMBLY FOR GRIT COLLECTOR							
• Check chain for alignment and tension							M
• Check manufacturer's literature for trouble-shooting procedures							O
LUBRICATION							
• Grease worm shaft bearings through fittings			M				
• Check level of oil bath for worm gearing and ball bearings		M					
NOTE Grease for roller and ball bearings must not contain any graphite.							
• Open drain plug of gear case to drain any accumulation of water			M				
• Lubricate electric motors and speed reducers in accordance with manufacturer's instruction			E				
• Drain and replace the bearing oil					M		
• Oil roller chain in the chain guard	M						

SCREEN AND GRIT BUILDING NO. 1 (059)
GRIT REMOVAL EQUIPMENT
059-004-01-0000 THROUGH 059-004-06-0000

MAINTENANCE TASK	FREQUENCY						
	D	W	M	Q	SA	A	O
GRIT SEPARATOR							
• Check feed inlet or vortex finder for plugging (indicated by high pressure reading on the feed line pressure gauge); unplug feed inlet or vortex finder by turning feeding grit pump ON and OFF	O						
• Check feed line for plugging (indicated by low pressure reading on feed line pressure gauge); clean feed line	O						
• Check rubber lining in the feed chamber and conical sections for wear; replace in accordance with manufacturer's instruction			M				
• Check apex valve for plugging (indicated by no discharge); clean by inserting a rod into valve opening	O						
• Check liquid discharge from the apex valve. Refer to manufacturer's literature for adjustment and trouble-shooting procedures	O						

SCREEN AND GRIT BUILDING NO. 1 (059)
GRIT REMOVAL EQUIPMENT
059-005-01-0000 THROUGH 059-005-03-0000

MAINTENANCE TASK	FREQUENCY						
	D	W	M	Q	SA	A	O
GRIT WASHER							
• Check all hangers and rods for tightness						M	
• Check cranks, links and rods of reciprocating raking mechanism for free movement, secure connections, tightness of bolts					M		
• Check sprays for clogging and clean	O						
• Check overflow connections and boxes for deposit accumulations and clean					O		
• Check tightness of drive chain; adjust					M		
• Check sprocket on input shaft; replace if necessary					M		
LUBRICATION							
• Lubricate all bearings and moving parts			M				
NOTE Grease must not contain any graphite.							
• Check oil level in spur gear oil bath and replenish			M				
• Open drain plug on the gear case to drain any accumulation of water			M				
• Change oil in the gear case					M		
• Lubricate electric motor in accordance with manufacturer's instruction			E				
• Lubricate shear pin device and alarm assembly				M			

SCREEN AND GRIT BUILDING NO. 1 (059)
GRIT CONVEYOR
059-006-01-0000

MAINTENANCE TASK	FREQUENCY						
	D	W	M	Q	SA	A	O
GRIT CONVEYOR							
• Check conveyor idlers, belt and shafts for deposits			O				
• Remove and overhaul worn or damaged idlers, wash all parts with solvent							M
• Maintain proper belt tension							M
• Check for worn drive belt and pulleys; replace if necessary					M		
LUBRICATION							
• Lubricate motor bearings; do not over grease					E		
• Lubricate idlers			M				
• Change grease in idler's reservoir					M		
• Check the speed reducer for proper oil level in reservoir; replenish			M				
• Check for condensation in oil, if there is any water present, drain unit completely and refill					M		

SCREEN AND GRIT BUILDING NO. 1 (059)
GRIT PUMPING EQUIPMENT
059-007-01-0000 THROUGH 059-007-08-0000

MAINTENANCE TASK	FREQUENCY						
	D	W	M	Q	SA	A	O
GRIT PUMP							
• Check for unusual noise and vibration	O						
• Check packing and replace if necessary. Be sure the lantern ring is centered in the stuffing box at the entrance of the water seal piping connection					M		
• Check temperature of stuffing box, if overheating, packing may be too tight and is not allowing leakage of flushing water			M				
• Check operating temperature of motor bearings; bearing temperature should not be above 200 degrees F	O	M					
NOTES Operators are required to manually check the temperature of motor bearings daily. Mechanical Maintenance Personnel are required to check the temperature of motor bearings with a temperature sensing device, as recommended by themotor manufacturer weekly.							
• Check shaft or shaft sleeve for scoring; scoring accelerates packing wear					M		
• Check alignment of pump and motor; shim up units if necessary; if misalignment occurs frequently, inspect the entire piping system; unbolt piping at suction and discharge flanges to see if it springs away indicating strain on casing; inspect all pipe supports for soundness and effective support of load					M		
• Check the drive belts for excessive wear; replace if necessary					M		
• Clean motor. Use mineral spirits			E				
• Refer to manufacturer's literature for trouble-shooting procedures					E		M
LUBRICATION							
• Check oil level in ball bearing reservoir; keep filled to sight glass level; do not overfill	O						
• Lubricate motor bearings in accordance with manufacturer recommendation. Do not over grease					E		

SCREEN AND GRIT BUILDING NO. 1 (059)
SUMP PUMPS
059-008-01-0000 THROUGH 059-008-03-0000

MAINTENANCE TASK	FREQUENCY						
	D	W	M	Q	SA	A	O
SUMP PUMP							
• Check the unusual noise and excessive vibration; refer to manufacturer's literature for cause and corrective action	O						
• Test moisture detector for continuity			E				
• Refer to manufacturer's literature for trouble-shooting procedures							M
LUBRICATION							
• Lubricate Electric motor as recommended by the manufacturer. Do not over grease							E

SCREEN AND GRIT BUILDING NO. 1 (059)
HOISTING EQUIPMENT
059-009-01-0000 THROUGH 059-009-03-0000

MAINTENANCE TASK	FREQUENCY						
	D	W	M	Q	SA	A	O
HOISTING EQUIPMENT - GENERAL							
• Check all functional operating mechanisms for any maladjustments that may interfere with proper operation			M				
• Check that warning labels, push button markings or capacity markings have not been removed or are illegible					M		
• Check bolts, nuts and rivets for tightness					M		
• Check brake system for excessive wear and drift					M		
• For detailed maintenance procedures, refer to manufacturer's literature							M
HOOKS							
• Check for deformation and chemical damage			M				
• Check throat opening; replace if bent from normal opening			M				
• Check for twists of hook eye or hook; replace if twisted			M				
• Check if hook eye or hook is bent; replace if bent			M				
• Check for hinge action wear at point of contact and elongation of hook eye			M				
LOAD BEARING CABLE							
• Check load bearing cable for wear, twist, distortion, kinks, strand breaks, improper dead ending; replace cable if conditions described above are excessive			M				
LUBRICATION							
• Check gear oil; maintain level at oil bath			M				
• Lubricate bearings through a grease fitting					M		
• Lubricate shafts					M		

SCREEN AND GRIT BUILDING NO. 1 (059)
CONTROL GATES: SLUICE GATES AND SLIDE GATE
059-012-01-0000 THROUGH 059-012-09-0000 AND 059-013-01-000

MAINTENANCE TASK	FREQUENCY						
	D	W	M	Q	SA	A	O
SLUICE GATE AND SLIDE GATE							
• Clean stem			O				
NOTE The frequency for cleaning the sluicE gate stem applies to new equipment. The actual required cleaning frequency will be determined based on use of equipment.							
• Clean gate guide groove and stem guide of any foreign matter				O			
• Check operating nut				M			
• Check gate guide groove and stem guide for proper alignment and bolts for tightness					M		
• Check wedge attaching studs and locknuts for proper tightness. Adjust if required					M		
ELECTRIC OPERATOR							
• Clean geared limit and torque switch contact. Use mineral spirits on lint-free cloth					E		
• Check limit switch gear box for damage; replace if necessary					E		
• Check wiring and push button contacts					E		
• Refer to manufacturer's literature for trouble-shooting procedures							E
LUBRICATION							
• Lubricate drive sleeve top bearing			M				
• Lubricate threaded portion of stem			M				
• Check condition of lubricant					M		

SCREEN AND GRIT BUILDING NO. 1 (059)
VENTILATION EQUIPMENT
059-048-01-0000 THROUGH 059-048-13-0000,
059-050-01-0000 THROUGH 059-050-09-0000,
059-056-01-0000 AND 059-056-02-0000

MAINTENANCE TASK	FREQUENCY						
	D	W	M	Q	SA	A	O
SUPPLY FANS AND EXHAUST FANS							
• If noises develop, check the fan for worn bearings, proper installation and anchoring and for adequate clearance of rotating members							M
• Check condition of V-belt; replace if necessary					M		
• Check V-belt tension. If adjustment is made, check pulley alignment					M		
LUBRICATION							
• Lubricate fan shaft ball bearings as recommended by the manufacturer. Add grease with the fan running					M		
NOTE See manufacturer's lubrication instructions to ascertain requirements							
• Lubricate motor bearings. Apply grease while motor is running. Do not over grease					E		

SCREEN AND GRIT BUILDING NO. 1 (059)
COMBUSTIBLE GAS DETECTION SYSTEM
059-044-01-0000

MAINTENANCE TASK	FREQUENCY						
	D	W	M	Q	SA	A	O
COMBUSTIBLE GAS DETECTION SYSTEM							
• Test and adjust alarm and warning points in accordance with the manufacturers recommendation					I		
• Check alarm circuit					I		
• Check the calibration					I		

SCREEN AND GRIT BUILDING NO. 1 (059)
OVERHEAD ROLLING DOORS
059-080-01-0000 THROUGH 059-080-04-0000

MAINTENANCE TASK	FREQUENCY						
	D	W	M	Q	SA	A	O
ROLLING DOOR							
• Inspect visually for cleanliness and ease of operation			O				
• Check guides, guide mouths, curtain and hood for wear or damage							M
• Clean accumulated grease and dirt from guides and debris from bottom of guides							M
• Adjust brake when operating stroke has increased to 7/8-inch							M
• Replace worn brake lining							M
• Wash chain in kerosene							M
• Adjust tension of chain if necessary							M
• Adjust torsion spring if necessary							M
• Clean magnetic reversing switch from dust, grease or moisture							M
• Refer to manufacturer's literature for trouble-shooting procedures							M
LUBRICATION							
• Lubricate hoist shaft and gears			M				
• Lubricate motor according to manufacturer's recommendation			E				
• Change oil in gear box						M	
• Lubricate chain and guides							M

SCREEN AND GRIT BUILDING NO. 1 (059)
GRIT AND SCREENINGS HANDLING EQUIPMENT
ELECTRIC FORKLIFT TRUCK

MAINTENANCE TASK	FREQUENCY						
	D	W	M	Q	SA	A	O
ELECTRIC FORKLIFT TRUCK							
• Check cartridge filter in the return line and breather cap filter of hydraulic system					M		
• Check hydraulic reservoir					M		
• Check chains for wear					M		
• Clean and lubricate chains			M				
• Check battery charge level; recharge or change	O						
• Check tires for wear					M		
LUBRICATION							
• Check oil level in drive gear oil bath and replenish			M				
• Lubricate all steering connections thru standard high pressure lubrication fittings			M				
• Check oil level gauge for the lift truck weight indicator			O				

SCREEN AND GRIT BUILDING NO. 2 (005)
MECHANICAL SEWAGE SCREENS
005-001-01-0000 AND 005-001-02-0000

MAINTENANCE TASK	FREQUENCY						
	D	W	M	Q	SA	A	O
BAR SCREEN							
• Paint all parts as needed							M
• Check and tighten locknuts holding rakes			M				
• Check and tighten all bolts joining sections of unit			M				
• Check rake wiper for proper contact and cleaning action			O				
• Check power drive chains and sprockets for proper alignment and tightness					M		
• Check that plunger is flexible and air escape is sealed		M					
• Check operating temperature of motor bearings; should be less than 200 degrees F		O					
LUBRICATION							
• Grease shearing surfaces of shear pin				M			
NOTE Corrosive properties of sewage gases could cause shearing surfaces to freeze together.							
• Swab or brush oil on drive chain		M					
• Lubricate grid couplings			M				
• Grease radius arm pivot lubrication fitting		M					
• Grease fitting on flex line of head and idler shaft bearings		M					
• Grease chain guide angles		M					
• Add oil to shock absorber through pin hole in cylinder		M					
• Check oil level of speed reducer		O					
• Check oil of speed reducer for water condensation; if water is present drain completely, flush out, and fill to proper level		M					
• Change the oil of speed reducer							
• Lubricate electric motor in accordance with manufacturer's recommendation							

SCREEN AND GRIT BUILDING NO. 2 (005)
SCREEN CONVEYOR
005-002-01-0000

MAINTENANCE TASK	FREQUENCY						
	D	W	M	Q	SA	A	O
CONVEYOR							
• Check conveyor idlers, shafts, etc. thoroughly for accumulation of screenings or dirt deposits			O				
• Check alignment of sprockets, shafts and belt drive pulleys					M		
• Check for excessive wear of sprockets teeth and chain; replace if necessary					M		
• Maintain proper chain slack					M		
• Remove and overhaul worn or damaged idlers, wash all parts with solvent							M
• Check drive shaft seal; replace if necessary					M		
• Maintain proper tension of drive belt							M
• Check for worn drive belt and pulleys; replace if necessary					M		
• Refer to manufacturer's literature for trouble-shooting procedures							M
LUBRICATION							
• Check the speed reducer for proper oil level in reservoir; replenish			M				
• Check for condensation in oil, if there is any water present, drain unit completely and refill					M		
• Check proper level at oil well in chain case. Drain settled water			M				
• Lubricate idlers and fill center tube with grease			M				
• Lubricate motor bearings; do not over grease					E		

SCREEN AND GRIT BUILDING NO. 2 (005)
GRIT COLLECTORS
005-003-01-0000 THROUGH 005-03-04-0000

MAINTENANCE TASK	FREQUENCY						
	D	W	M	Q	SA	A	O
GRIT COLLECTOR MECHANISM							
• Check and tighten all bolts and nuts							M
• Check all parts for excessive wear and replace worn sections					M		
• Test overload alarm for proper function		M					
NOTE For replacement faulty parts of overload alarms refer to manufacturer's literature.							
• Paint entire mechanism above and below water line							M
• Paint all rust spots as needed							M
DRIVE ASSEMBLY FOR GRIT COLLECTOR							
• Check chain for alignment and tension							M
• Check manufacturer's literature for trouble-shooting procedures							O
LUBRICATION							
• Grease worn shaft bearings through fittings			M				
• Check level of oil bath for worn gearing and ball bearings		M					
NOTE Grease for roller and ball bearings must not cntain any graphite.							
• Open drain plug of gear case to drain any accumulation of water			M				
• Lubricate electric motors and speed reducers in accordance with manufacturer's instruction			E				
• Drain and replace the bearing oil					M		
• Oil roller chain in the chain guard		M					

SCREEN AND GRIT BUILDING NO. 2 (005)
GRIT REMOVAL EQUIPMENT
005-004-01-0000 THROUGH 005-004-06-0000

MAINTENANCE TASK	FREQUENCY						
	D	W	M	Q	SA	A	O
GRIT SEPARATOR							
• Check feed inlet or vortex finder for plugging (indicated by high pressure reading on the feed line pressure gauge); unplug feed inlet or vortex finder by turning feeding grit pump ON and OFF	O						
• Check feed line for plugging (indicated by low pressure reading on feed line pressure gauge); clean feed line	O						
• Check rubber lining in the feed chamber and conical sections for wear; replace in accordance with manufacturer's instruction			M				
• Check apex valve for plugging (indicated by no discharge); clean be inserting a rod into valve opening	O						
• Check liquid discharge from the apex valve. Refer to manufacturer's literature for adjustment and trouble-shooting procedures	O						

SCREEN AND GRIT BUILDING NO. 2 (005)
GRIT REMOVAL EQUIPMENT
0005-005-01-0000 THROUGH 005-005-03-0000

MAINTENANCE TASK	FREQUENCY						
	D	W	M	Q	SA	A	O
GRIT WASHER							
• Check all hangers and rods for tightness						M	
• Check cranks, links and rods of reciprocating raking mechanism for free movement, secure connections, tightness of bolts					M		
• Check sprays for clogging and clean	O						
• Check overflow connections and boxes for deposit accumulations and clean					O		
• Check tightness of drive chain; adjust					M		
• Check sprocket on input shaft; replace if necessary					M		
LUBRICATION							
• Lubricate all bearings and moving parts			M				
NOTE Grease must not contain any graphite.							
• Check oil level in spur gear oil bath and replenish			M				
• Open drain plug on the gear case to drain any accumulation of water			M				
• Change oil in the gear case					M		
• Lubricate electric motor in accordance with manufacturer's instruction			E				
• Lubricate shear pin device and alarm assembly				M			

SCREEN AND GRIT BUILDING NO. 2 (005)
GRIT CONVEYOR
005-006-01-0000

MAINTENANCE TASK	FREQUENCY						
	D	W	M	Q	SA	A	O
GRIT CONVEYOR							
• Check conveyor idlers, belt and shafts for deposits			O				
• Remove and overhaul worn or damaged idlers, wash all parts with solvent							M
• Maintain proper belt tension							M
• Check for worn drive belt and pulleys; replace if necessary					M		
LUBRICATION							
• Lubricate motor bearings; do not over grease					E		
• Lubricate idlers			M				
• Change grease in idler's reservoir					M		
• Check the speed reducer for proper oil level in reservoir; replenish							
• Check for condensation in oil, if there is any water present, drain unit completely and refill							

SCREEN AND GRIT BUILDING NO. 2 (005)
GRIT PUMPING EQUIPMENT
005-007-01-0000 THROUGH 005-007-08-0000

MAINTENANCE TASK	FREQUENCY						
	D	W	M	Q	SA	A	O
GRIT PUMP							
• Check for unusual noise and vibration	O						
• Check packing and replace if necessary. Be sure the lantern ring is centered in the stuffing box at the entrance of the water seal piping connection					M		
• Check temperature of stuffing box, if overheating, packing may be too tight and is not allowing leakage of flushing water			M				
• Check operating temperature of motor bearings; bearing temperature should not be above 200 degrees F	O	M					
NOTES Operators are required to manually check the temperature of motor bearings daily. Mechanical Maintenance Personnel are required to check the temperature of motor bearings with a temperature sensing device, as recommended by themotor manufacturer weekly.							
• Check shaft or shaft sleeve for scoring; scoring accelerates packing wear					M		
• Check alignment of pump and motor; shim up units if necessary; if misalignment occurs frequently, inspect the entire piping system; unbolt piping at suction and discharge flanges to see if it springs away indicating strain on casing; inspect all pipe supports for soundness and effective support of load					M		
• Check the drive belts for excessive wear; replace if necessary					M		
• Clean motor. Use mineral spirits			E				
• Refer to manufacturer's literature for trouble-shooting procedures					E		M
LUBRICATION							
• Check oil level in ball bearing reservoir; keep filled to sight glass level; do not overfill	O						
• Lubricate motor bearings in accordance with manufacturer recommendation. Do not over grease					E		

SCREEN AND GRIT BUILDING NO. 2 (005)
SUMP PUMPS
005-008-01-0000 THROUGH 005-008-03-0000

MAINTENANCE TASK	FREQUENCY						
	D	W	M	Q	SA	A	O
SUMP PUMP							
• Check operating temperature of motor bearings; bearing temperature should not be above 200 degrees F	O	M					
NOTE Operators are required to manually check the temperature of motor bearings daily. Mechanical Maintenance Personnel are required to check the temperature of motor bearings with a temperature sensing device, as recommended by the motor manufacturer weekly							
• Check the unusual noise and excessive vibration; refer to manufacturer's literature for cause and corrective action	O						
• Check impeller clearance; adjust as required					M		
• Check coupling for wear and replace if necessary					M		
• Check for misalignment of coupling and shaft					M		
• Check water lubrication line for damage and tightness					M		
• Refer to manufacturer's literature for trouble-shooting procedures							M
LUBRICATION							
• Check oil level in reservoir for intermediate bearings; replenish	O						
• Lubricate thrust bearings in motor bracket as recommended by the manufacturer			E				

SCREEN AND GRIT BUILDING NO. 2 (005)
HOISTING EQUIPMENT
005-009-01-0000 THROUGH 005-009-03-0000

MAINTENANCE TASK	FREQUENCY						
	D	W	M	Q	SA	A	O
HOISTING EQUIPMENT - GENERAL							
• Check all functional operating mechanisms for any maladjustments that may interfere with proper operation			M				
• Check that warning labels, push button markings or capacity markings have not been removed or are illegible					M		
• Check bolts, nuts and rivets for tightness					M		
• Check brake system for excessive wear and drift					M		
• For detailed maintenance procedures, refer to manufacturer's literature							M
HOOKS							
• Check for deformation and chemical damage			M				
• Check throat opening; replace if bent from normal opening			M				
• Check for twists of hook eye or hook; replace if twisted			M				
• Check if hook eye or hook is bent; replace if bent			M				
• Check for hinge action wear at point of contact and elongation of hook eye			M				
LOAD BEARING CABLE							
• Check load bearing cable for wear, twist, distortion, kinks, strand breaks, improper dead ending; replace cable if conditions described above are excessive			M				
LUBRICATION							
• Check gear oil; maintain level at oil bath			M				
• Lubricate bearings through a grease fitting					M		
• Lubricate shafts					M		

SCREEN AND GRIT BUILDING NO. 2 (005)
CONTROL GATES: SLUICE GATES AND SLIDE GATE
005-012-01-0000 THROUGH 005-012-08-0000 AND 005-013-01-000

MAINTENANCE TASK	FREQUENCY						
	D	W	M	Q	SA	A	O
SLUICE GATE AND SLIDE GATE							
• Clean stem			O				
NOTE The frequency for cleaning the sluice gate stem applies to new equipment. The actual required cleaning frequency will be determined based on use of equipment.							
• Clean gate guide groove and stem guide of any foreign matter							O
• Check gate guide groove and stem guide for proper alignment and bolts for tightness						M	
• Check wedge attaching studs and locknuts for proper tightness. Adjust if required						M	
ELECTRIC OPERATOR							
• Clean geared limit and torque switch contact. Use mineral spirits on lint-free cloth					E		
• Check limit switch gear box for damage; replace if necessary					E		
• Check wiring and push button contacts					E		
• Refer to manufacturer's literature for trouble-shooting procedures							E
LUBRICATION							
• Lubricate drive sleeve top bearing			M				
• Lubricate threaded portion of stem			M				
• Check condition of lubricant					M		

SCREEN AND GRIT BUILDING NO. 2 (005)
VENTILATION EQUIPMENT
005-048-01-0000 THROUGH 005-048-03-0000
AND 005-050-01-0000 THROUGH 005-050-15-0000

MAINTENANCE TASK	FREQUENCY						
	D	W	M	Q	SA	A	O
SUPPLY FANS AND ROOF EXHAUST FANS							
• If noises develop, check the fan for worn bearings, proper installation and anchoring and for adequate clearance of rotating members							M
• Check condition of V-belt; replace if necessary					M		
• Check V-belt tension. If adjustment is made, check pulley alignment					M		
LUBRICATION							
• Lubricate fan shaft ball bearings. Add grease with the fan running					M		
NOTE Use low pressure grease gun only.							
• Lubricate motor bearings. Apply grease while motor is running. Do not over grease					E		

SCREEN AND GRIT BUILDING NO. 2 (005)
COMBUSTIBLE GAS DETECTION SYSTEM
005-044-01-0000 THROUGH 005-044-05-0000

MAINTENANCE TASK	FREQUENCY						
	D	W	M	Q	SA	A	O
COMBUSTIBLE GAS DETECTION SYSTEM							
• Test and adjust alarm and warning points in accordance with the manufacturers recommendation					I		
• Check alarm circuit					I		
• Check the calibration					I		

SCREEN AND GRIT BUILDING NO. 2 (005)
OVERHEAD ROLLING DOORS
005-080-01-0000 THROUGH 005-080-04-0000

MAINTENANCE TASK	FREQUENCY						
	D	W	M	Q	SA	A	O
ROLLING DOOR							
• Inspect visually for cleanliness and ease of operation			O				
• Check guides, guide mouths, curtain and hood for wear or damage							M
• Clean accumulated grease and dirt from guides and debris from bottom of guides							M
• Adjust brake when operating stroke has increased to 7/8-inch							M
• Replace worn brake lining							M
• Wash chain in kerosene							M
• Adjust tension of chain if necessary							M
• Clean magnetic reversing switch from dust, grease or moisture							M
• Refer to manufacturer's literature for trouble-shooting procedures							M
LUBRICATION							
• Lubricate hoist shaft and gears			M				
• Lubricate motor according to manufacturer's recommendation			E				
• Change oil in gear box						M	
• Lubricate chain and guides							M

SCREEN AND GRIT BUILDING NO. 2 (005)
GRIT AND SCREENINGS HANDLING EQUIPMENT
ELECTRIC FORKLIFT TRUCK

MAINTENANCE TASK	FREQUENCY						
	D	W	M	Q	SA	A	O
ELECTRIC FORKLIFT TRUCK							
• Check cartridge filter in the return line and breather cap filter of hydraulic system					M		
• Check hydraulic reservoir					M		
• Check chains for wear					M		
• Clean and lubricate chains			M				
• Check battery charge level; recharge or change	O						
• Check tires for wear					M		
LUBRICATION							
• Check oil level in drive gear oil bath and replenish			M				
• Lubricate all steering connections thru standard high pressure lubrication fittings			M				
• Check oil level gauge for the lift truck weight indicator			O				

CONTROL BUILDING AND SLUDGE STORAGE TANKS (054)
SUMP PUMP
054-008-01-0000

MAINTENANCE TASK	FREQUENCY						
	D	W	M	Q	SA	A	O
SUMP PUMP							
• Check operating temperature of motor bearings; bearing temperature should not be above 200 degrees F	O	M					
NOTES Operators are required to manually check the temperature of motor bearings daily. Mechanical Maintenance Personnel are required to check the temperature of motor bearings with a temperature sensing device, as recommended by the motor manufacturer weekly.							
• Check for unusual noise and excessive vibration; refer to manufacturer's literature for cause and corrective action	O						
• Check impeller clearance; adjust as required					M		
• Check coupling for wear and replace if necessary					M		
• Check for misalignment of coupling and shaft					M		
• Check water lubrication line for damage and tightness					M		
• Refer to manufacturer's literature for trouble-shooting procedures							M
LUBRICATION							
• Lubricate thrust bearings			M				
• Lubricate motor bearings in accordance with manufacturer's recommendation. Do not over grease					E		

CONTROL BUILDING AND SLUDGE STORAGE TANKS (054)
HOIST
054-009-01-0000

MAINTENANCE TASK	FREQUENCY						
	D	W	M	Q	SA	A	O
HOISTING EQUIPMENT - GENERAL							
• Check all functional operating mechanisms for any maladjustments that may interfere with proper operation			M				
• Check that warning labels, push button markings or capacity markings have not been removed or are illegible					M		
• Check bolts, nuts and rivets for tightness					M		
• Check brake system for excessive wear and drift					M		
• For detailed maintenance procedures, refer to manufacturer's literature							M
HOOKS							
• Check for deformation and chemical damage			M				
• Check throat opening; replace if bent from normal opening			M				
• Check for twists of hook eye or hook; replace if twisted			M				
• Check if hook eye or hook is bent; replace if bent			M				
• Check for hinge action wear at point of contact and elongation of hook eye			M				
LOAD BEARING CABLE							
• Check load bearing cable for wear, twist, distortion, kinks, strand breaks, improper dead ending; replace cable if conditions described above are excessive			M				
LUBRICATION							
• Check gear oil; maintain level at oil bath			M				
• Lubricate bearings through a grease fitting					M		
• Lubricate shafts					M		

CONTROL BUILDING AND SLUDGE STORAGE TANKS (054)
SLUDGE MIXERS
054-028-01-0000 THROUGH 054-028-07-0000

MAINTENANCE TASK	FREQUENCY						
	D	W	M	Q	SA	A	O
MIXER							
• Check for unusual noise and excessive vibration	O						
• Check for overheating. Operating unit temperature should not exceed 180 degrees F	O						
• Check for oil leakage	O						
• Clean and flush breather elements			M				
• Check gap, angular and offset alignment of coupling					M		
• Check for worn bearings, seals, O-rings. Replace if necessary in accordance with manufacturer's recommended procedures							M
• Refer to manufacturer's literature for trouble-shooting procedures							M
LUBRICATION							
• Lubricate oil seals			M				
• Check oil level in unit. Add oil if necessary. Do not overfill		M					
• Add grease to all grease fittings			M				
• Examine lube oil for contamination. If contaminated, drain and refill lubricating system			M				
• Change lubricant					M		
• Lubricate coupling. Use standard grease gun; fill with grease until an excess appears at the opening on the other side					M		
• Lubricate bearings of motor in accordance with manufacturer's recommended procedure. Do not over lubricate					E		

CONTROL BUILDING AND SLUDGE STORAGE TANKS (054)
AGING TANK MIXERS
054-028-08-0000 AND 054-028-09-0000

MAINTENANCE TASK	FREQUENCY						
	D	W	M	Q	SA	A	O
MIXERS							
• Check for unusual noise and excessive vibration	O						
• Check for overheating. Operation unit temperature should not exceed 180 degrees F	O						
• Check for oil leakage	O						
• Clean and flush breather elements			M				
• Check gap, angular and offset alignment of coupling					M		
• Check for worn bearings, seals, O-rings. Replace if necessary in accordance with manufacturer's recommended procedures							M
• Refer to manufacturer's literature for trouble-shooting procedures							M
LUBRICATION							
• Lubricate oil seals			M				
• Check oil level in unit. Add oil if necessary. Do not overfill		M					
• Add grease to all grease fittings			M				
• Examine lube oil for contamination. If contaminated, drain and refill lubricating system			M				
• Change lubricant in accordance with manufacturer's recommended procedure							M
• Lubricate bearings of motor in accordance with manufacturer's recommended procedure. Do not over lubricate							E

CONTROL BUILDING AND SLUDGE STORAGE TANKS (054)
SUPPLY FAN
054-048-01-0000

MAINTENANCE TASK	FREQUENCY						
	D	W	M	Q	SA	A	O
SUPPLY FAN							
• Check for unusual noise and excessive vibration. If noises develop, check the fan for worn bearings, proper installation and anchoring and for adequate clearance of rotating members							
• Check condition of V-belt; replace if necessary					M		
• Check V-belt tension. If adjustment is made, check pulley alignment					M		
• Refer to manufacturer's literature for trouble-shooting procedures							M
LUBRICATION							
• Lubricate fan bearings. Add grease with the fan running					M		
NOTE Use low pressure grease gun only.							
• Lubricate motor bearings. Add grease while motor is running. Do not over grease					E		

CONTROL BUILDING AND SLUDGE STORAGE TANKS (054)
ROOF EXHAUST FAN
054-050-01-0000

MAINTENANCE TASK	FREQUENCY						
	D	W	M	Q	SA	A	O
ROOF EXHAUST FAN							
• Check for unusual noise and excessive vibration. If noises develop, check the fan for proper installation and anchoring, for worn bearings and for adequate clearance of rotating members							M
• Check the blades for accumulated foreign material and clean if necessary						M	
• Check motor for free movement and motor bearings for excessive wear						E	
LUBRICATION							
• Lubricate motor bearings according to the manufacturer's recommendation. Do not over grease							E

CONTROL BUILDING AND SLUDGE STORAGE TANKS (054)
AIR CONDITIONING UNIT
054-051-01-0000

MAINTENANCE TASK	FREQUENCY						
	D	W	M	Q	SA	A	O
AIR CONDITIONING UNIT							
• Inspect unit coils. Clean if necessary					M		
• Inspect unit casing and accessories for paint chipping or corrosion. If damage is found, clean and recoat						M	
• Clean fan wheels and fan shaft. If rust is found on the fan shaft, remove with emery cloth and recoat						M	
• Change dirty filter media				M			
• Check drain line for sludge or other foreign materials						M	
• If noises develop, check locking devices for tightness, all bearings for wear and for adequate clearance of rotating members							M
• Check all electrical terminals for tightness and electrical wires for damage						E	
• Check alignment of motors and driven shafts. Adjust if necessary					M		
• Check system for proper operation. Refer to manufacturer's literature for instruction							M
• Refer to manufacturer's literature for trouble-shooting procedures							M
LUBRICATION							
• Lubricate electric motor in accordance with manufacturer's instruction							E
• Lubricate fan bearings. Do not over grease					M		

CONTROL BUILDING AND SLUDGE STORAGE TANKS (054)
POLYMER FEED PUMPS
054-075-01-0000 AND 054-075-02-0000

MAINTENANCE TASK	FREQUENCY						
	D	W	M	Q	SA	A	O
POLYMER FEED PUMP							
• Check for unusual noise and excessive vibration; refer to manufacturer's literature for cause and corrective action	O						
• Check operating temperature of motor bearings; bearing temperature should not be above 200 degrees F	O	M					
NOTES Operators are required to manually check the temperature of motor bearings daily. Mechanical Maintenance Personnel are required to check the temperature of motor bearings with a temperature sensing device, as recommended by the motor manufacturer weekly.							
• Clean motor. Use mineral spirit			E				
• Check the drive belts for proper tension. Adjust			M				
• Check the drive belts for excessive wear; replace if necessary					M		
• Check alignment of pump and drive motor					M		
• Refer to manufacturer's literature for trouble-shooting procedures							M
LUBRICATION							
• Lubricate pump bearings. Do not over grease			M				
• Inspect bearing grease for contamination with water or sludge. If necessary, drain old grease from the bearing housing, wash the bearing shaft assembly with clean benzine and refill. Add a few drops of oil to bearing seals before remounting assembly				M			
• Lubricate motor bearings in accordance with manufacturer's recommendation. Do not over grease							E

CONTROL BUILDING AND SLUDGE STORAGE TANKS (054)
LIQUID POLYMER BLENDING UNITS
054-087-01-0000 AND 054-087-02-0000

MAINTENANCE TASK	FREQUENCY						
	D	W	M	Q	SA	A	O
LIQUID POLYMER BLENDING UNIT							
• Check sensitivity of probes		O					
• Check for broken or rupture of wires to level probes				M			
• Clean solenoid valve				M			
• Check seating and operation of solenoid valve. Replace worn or damage parts				M			
• Check alignment of pumps and drives					M		
• Check for worn stator of polymer pump					M		
• Check packing of polymer pump for tightness and wear. Replace if necessary			M				
• Check shaft of polymer pump for scoring. If shaft is scored as much as 1/64 inch deep it should be removed and polished before renewing packing				M			
• Inspect contacts of full voltage starters. Replace if severely burned, pitted or worn						E	
• Check for deposition of foreign material on the probes of no-flow switch. Clean if necessary					M		
• Test for proper operation of probe of no flow switch and associated equipment							M
• Refer to manufacturer's literature for trouble-shooting procedures							M
LUBRICATION							
• Check the oil level through the plug in speed reducer. Replenish		E					
• Change the oil in speed reducer housing				E			
• Lubricate bearing of the polymer pump. Do not over grease			M				
• Lubricate packing of polymer pump. Do not over grease			M				
• Change grease in bearing housing of pump. Before remounting assembly wash bearing shaft assembly with clean benzine and add a few drops of oil to bearing seals						M	

CONTROL BUILDING AND SLUDGE STORAGE TANKS (054)
SLUDGE TRANSFER PUMPS
054-088-01-0000 AND 054-088-02-0000

MAINTENANCE TASK	FREQUENCY						
	D	W	M	Q	SA	A	O
SLUDGE TRANSFER PUMP							
• Check for excessive noise. Refer to manufacturer's literature for corrective action	O						
• Check alignment of pump and motor						M	
• Clean pump from dust; in particular around bearings. Use clean wiper cloth						M	
• Check water seal piping for damage and tightness					M		
• Refer to manufacturer's literature for trouble-shooting procedures							M
LUBRICATION							
• Lubricate pump bearings. Do not over grease			M				
• Inspect bearing grease for contamination with water or sludge. If necessary, drain old grease from the bearing housing, wash the bearing shaft assembly with clean benzine and refill. Add a few drops of oil to bearing seals before remounting assembly				M			
• Lubricate motor bearings in accordance with manufacturer's recommendation. Do not over grease							E

CONTROL BUILDING AND SLUDGE STORAGE TANKS (054)
MAGNETIC SLUDGE FLOWMETERS
054-036-02-0000 THROUGH 054-036-06-0000

MAINTENANCE TASK	FREQUENCY						
	D	W	M	Q	SA	A	O
MAGNETIC METER							
• Check for proper operation of metering system. Perform static test of line power, reference and control signal, current output, magnetic drive and coils, ultrasonic generator and metering electrodes					I		
• Replace metering tube if meter electrode assemblies are corroded or shorted and liner is worn; after reinstallation perform alignment procedure							I
• Perform dynamic performance check to verify accuracy and proper performance of electronic circuitry of flow converter. If accuracy is not within specified tolerance recalibrate converter					I		
• For detailed checking and replacement procedures of metering system refer to manufacturer's literature							I
• Refer to manufacturer's literature for trouble-shooting procedures							I

CONTROL BUILDING AND SLUDGE STORAGE TANKS (054)
MAGNETIC POLYMER FEED FLOWMETERS
054-036-07-0000 AND 054-036-08-0000

MAINTENANCE TASK	FREQUENCY						
	D	W	M	Q	SA	A	O
MAGNETIC METER							
• Check for proper operation of metering system. Perform static test of line power, reference and control signal, current output, magnetic drive and coils, ultrasonic generator and metering electrodes					I		
• Replace metering tube if meter electrode assemblies are corroded or shorted and liner is worn; after reinstallation perform alignment procedure							I
• Perform dynamic performance check to verify accuracy and proper performance of electronic circuitry of flow converter. If accuracy is not within specified tolerance recalibrate converter					I		
• For detailed checking and replacement procedures of metering system refer to manufacturer's literature							I
• Refer to manufacturer's literature for trouble-shooting procedures							I

SLUDGE DRYING BEDS (027)
DRIED SLUDGE CONVEYOR AND TRIP-OFF DEVICE
027-090-01-0000 THROUGH 027-090-08-0000 AND 027-091-01-0000

MAINTENANCE TASK	FREQUENCY						
	D	W	M	Q	SA	A	O
DRIED SLUDGE CONVEYOR AND TRIP-OFF DEVICE							
• Check for excessive vibration, unusual sounds, excessive beat and oil leakage of motor and reducer	O						
• Check parallel and angular alignment of coupling				M			
• Inspect all parts of reducer. Replace defective parts if necessary					M		
• Inspect motor for cleanliness, moisture, over loading and test insulation resistance of motor winding					E		
• Inspect idlers for broken or damage parts, make certain that all rolls turn freely and smoothly			M				
• Clean rolls surfaces from accumulated material		M					
• Clean reducer with mineral spirits or kerosene				M			
• Clean motor. Use mineral spirits				E			
• Clean breather with a solvent and blow out with clean compressed air.					M		
• Refer to manufacturer's literature for trouble-shooting procedures							M
LUBRICATION							
• Lubricate bearings of chain coupling		M					
• Lubricate carrying and return idlers. Apply grease while the idlers are operating				M			
• Check oil level of reducer's reservoir in sight level gage. Replenish			M				
• Check oil in reducer's reservoir for any signs of contamination. Drain and replace if necessary			M				
• Change oil in reducer's reservoir					M		
• Lubricate motor bearings in accordance with manufacturer's recommendation. Do not over grease					E		

SLUDGE DEWATERING FACILITY (032)
SLUDGE GRINDING EQUIPMENT
032-062-01-0000 THROUGH 032-162-04-0000

MAINTENANCE TASK	FREQUENCY						
	D	W	M	Q	SA	A	O
SLUDGE GRINDER EQUIPMENT							
• Check for unusual noise, vibration and heating of motor and reducer	O						
• Inspect cutters for damaged teeth					M		
• Inspect cutters, spacers and shafts for tangled rope or other restrictive debris							M
• Inspect alignment and rigidity of grinder shafts					M		
• Inspect shaft and bearing connection					M		
• Inspect all parts of reducer. Replace defective parts if necessary					M		
• Clean motor and reducer with mineral spirits				E			
• See manufacturer's literature for trouble-shooting and disassembly procedures							M
LUBRICATION							
• Lubricate shaft bearings. Use grease compatible with the nylon acetal type bearings, (See manufacturer's literature). Do not over grease		M					
• Lubricate motor bearings in accordance with manufacturer's recommendation. Do not over grease				E			
• Refer to manufacturer's literature for trouble-shooting procedures			M				

SLUDGE DEWATERING FACILITY (032)
SLUDGE FEED PUMPING EQUIPMENT
032-156-01-0000 THROUGH 032-156-10-0000

MAINTENANCE TASK	FREQUENCY						
	D	W	M	Q	SA	A	O
SLUDGE FEED PUMPING EQUIPMENT							
• Check for unusual noise and excessive vibration; refer to manufacturer's literature for cause and corrective action	O						
• Check temperature of stuffing box, if overheating, packing may be too tight and is not allowing proper leakage of flushing water of 1-2 drops per minute			M				
• Check operating temperature of motor bearings; bearing temperature should not be above 200 degrees F	O	M					
NOTES Operators are required to manually check the temperature of motor bearings daily. Mechanical Maintenance Personnel are required to check the temperature of motor bearings with a temperature sensing device, as recommended by the motor manufacturer weekly.							
• Check packing, all gaskets and "O" rings; replace if necessary			E				
• Clean motor. Use mineral spirit						M	
• Check alignment of pump, drive motor and gear reducer					M		
• Check water seal piping for damage and tightness							
• Refer to manufacturer's literature for trouble-shooting procedures			M				
LUBRICATION							
• Lubricate pump bearings. Do not over grease							M
• Inspect bearing grease for contamination with water or sludge. If necessary, drain old grease from the bearing housing, wash the bearing shaft assembly with clean benzine and refill. Add a few drops of oil to bearing seals before remounting assembly				M			
• Lubricate motor bearings in accordance with manufacturer's recommendation. Do not over grease							E

SLUDGE DEWATERING FACILITY (032)
LIQUID POLYMER AND DILUTED POLYMER TRANSFER PUMPS
032-067-01-0000 THROUGH 032-067-03-0000

MAINTENANCE TASK	FREQUENCY						
	D	W	M	Q	SA	A	O
POLYMER TRANSFER PUMPS							
• Check for unusual noise, vibration or motor heating	O						
• Clean exterior of pump and motor			M				
• Check for misalignment of coupling and shaft					M		
• Make thrust bearing adjustment if necessary							M
• Check closures, ball bearings, bushings, mechanical seal and all other parts for wear and damage. Replace if necessary							M
LUBRICATION							
• Lubricate motor; refer to manufacturer's instruction							E

SLUDGE DEWATERING FACILITY (032)
LIQUID POLYMER BLENDING UNITS
032-087-03-0000 THROUGH 032-087-06-0000

MAINTENANCE TASK	FREQUENCY						
	D	W	M	Q	SA	A	O
LIQUID POLYMER BLENDING UNIT							
• Check sensitivity of probes		O					
• Check for broken or rupture of wires to level probes				M			
• Clean solenoid valve				M			
• Check seating and operation of solenoid valve. Replace worn or damage parts				M			
• Check alignment of pumps and drives					M		
• Check for worn stator of polymer pump					M		
• Check packing of polymer pump for tightness and wear. Replace if necessary			M				
• Check shaft of polymer pump for scoring. If shaft is scored as much as 1/64 inch deep it should be removed and polished before renewing packing				M			
• Inspect contacts of full voltage starters. Replace if severely burned, pitted or worn						E	
• Check for deposition of foreign material on the probes of no-flow switch. Clean if necessary					M		
• Test for proper operation of probe of no flow switch and associated equipment							M
• Refer to manufacturer's literature for trouble-shooting procedures							M
LUBRICATION							
• Check the oil level through the plug in speed reducer. Replenish		E					
• Change the oil in speed reducer housing				E			
• Lubricate bearing of the polymer pump. Do not over grease			M				
• Lubricate packing of polymer pump. Do not over grease			M				

SLUDGE DEWATERING FACILITY (032)
LIQUID POLYMER BLENDING UNITS
032-087-03-0000 THROUGH 032-087-06-0000 (cont.)

MAINTENANCE TASK	FREQUENCY						
	D	W	M	Q	SA	A	O
LUBRICATION (cont.)							
• Change grease in bearing housing of pump. Before remounting assembly wash bearing shaft assemble with clean benzine and add a few drops of oil to bearing seals						M	
• Lubricate electrical motors in accordance with manufacturer's recommendation							E

SLUDGE DEWATERING FACILITY (032)
LIQUID POLYMER DILUTION UNITS
032-087-01-0000 THROUGH 032-087-02-0000

MAINTENANCE TASK	FREQUENCY						
	D	W	M	Q	SA	A	O
LIQUID POLYMER DILUTION UNITS							
• Check float switches for proper operation		O					
• Check for broken or ruptured wires to liquid level float switches				M			
• Clean solenoid valve				M			
• Check seating and operation of solenoid valve. Replace worn or damaged parts				M			
• Check alignment of pumps and drives					M		
• Clean mixing and polymer metering pumps				M			
NOTE Wipe pump parts with clean cloth dipped in a suitable solvent or boil in caustic solution.							
• Check packing of polymer pumps for tightness and wear. Replace if necessary			M				
• Check shafts of polymer pumps for scoring. If a shaft is scored as much as 1/64 inch deep it should be removed and polished before renewing packing				M			
• Refer to manufacturer's literature for trouble-shooting procedures							M
LUBRICATION							
• Lubricate bearings of the polymer mixing and metering pumps. Do not over grease					M		
• Change grease in bearing housing of pumps. Before re-mounting assembly wash bearing shaft assembly with clean benzine and add a few drops of oil to bearing seals						M	
• Lubricate electrical motors in accordance with manufacturer's recommendation							E

SLUDGE DEWATERING FACILITY (032)
LIQUID POLYMER AGING TANK MIXERS
032-028-01-0000 THROUGH 032-028-04-0000

MAINTENANCE TASK	FREQUENCY						
	D	W	M	Q	SA	A	O
MIXERS							
• Check for unusual noise and excessive vibration	O						
• Check for overheating. Operation unit temperature should not exceed 180 degrees F	O						
• Check for oil leakage	O						
• Clean and flush breather elements			M				
• Check gap, angular and offset alignment of coupling					M		
• Check for worn bearings, seals, O-rings. Replace if necessary in accordance with manufacturer's recommended procedures							M
• Refer to manufacturer's literature for trouble-shooting procedures							M
LUBRICATION							
• Lubricate oil seals			M				
• Check oil level in unit. Add oil if necessary. Do not overfill		M					
• Add grease to all grease fittings			M				
• Examine lube oil for contamination. If contaminated, drain and refill lubricating system			M				
• Change lubricant in accordance with manufacturer's recommended procedure							M
• Lubricate bearings of motor in accordance with manufacturer's recommended procedure. Do not over lubricate							E

SLUDGE DEWATERING FACILITY (032)
POLYMER FEED PUMPS
032-075-01-0000 THROUGH 032-075-16-0000

MAINTENANCE TASK	FREQUENCY						
	D	W	M	Q	SA	A	O
POLYMER FEED PUMP							
• Check for unusual noise and excessive vibration; refer to manufacturer's literature for cause and corrective action	O						
• Check operating temperature of motor bearings; bearing temperature should not be above 200 degrees F	O	M					
NOTES Operators are required to manually check the temperature of motor bearings daily. Mechanical Maintenance Personnel are required to check the temperature of motor bearings with a temperature sensing device, as recommended by the motor manufacturer weekly.							
• Clean motor. Use mineral spirit			E				
• Check the drive belts for proper tension. Adjust			M				
• Check the drive belts for excessive wear; replace if necessary					M		
• Check alignment of pump and drive motor					M		
• Refer to manufacturer's literature for trouble-shooting procedures							M
LUBRICATION							
• Lubricate pump bearings. Do not over grease			M				
• Inspect bearing grease for contamination with water or sludge. If necessary, drain old grease from the bearing housing, wash the bearing shaft assembly with clean benzine and refill. Add a few drops of oil to bearing seals before remounting assembly				M			
• Lubricate motor bearings in accordance with manufacturer's recommendation. Do not over grease							E

SLUDGE DEWATERING FACILITY (032)
BELT FILTER PRESS EQUIPMENT
032-084-04-0000 THROUGH 032-084-12-0000

MAINTENANCE TASK	FREQUENCY						
	D	W	M	Q	SA	A	O
BELT FILTER PRESS EQUIPMENT							
• Check belt spray-water operation for proper pressure and belt wetting effectiveness	O						
• Check automatic belt tracking mechanism for proper operation. Adjust tracking mechanisms if necessary	O						
• Check belt wear, replace when necessary	O						
• Check drive components for unusual noise or excessive vibration							O
• Inspect frame for nicks, scratches or cuts of the coating. Touch up coating if necessary	O						
• Inspect and clean rollers. Replace if damaged			M				
• Check roller bearing for noise, vibration or heat	O						
• Check all pipes connection for tightness and leaks	O	M					
• Check venturi mixer for clogging. Clean if necessary	O						
• Check spray water solenoid valves for proper seating and operation	O						
• Hose down the belt filter press equipment	O						
• Refer to manufacturer's literature for trouble-shooting procedures							M
LUBRICATION							
• Add grease to each set of grease fittings located on the frame of the belt filter press to supply grease to all required moving parts (See manufacturer's literature for proper lubricant)		M					
• Check lubricant level in drive gear reducer			M				
• Change lubricant in drive gear reducer (see manufacturer's literature for proper lubricant) every 2500 hours or one year whichever comes first							M

SLUDGE DEWATERING FACILITY (032)
SLUDGE CONVEYOR EQUIPMENT
032-090-12-0000 AND 032-090-13-0000

MAINTENANCE TASK	FREQUENCY						
	D	W	M	Q	SA	A	O
SLUDGE CONVEYOR							
• Check motor and reducer for excessive vibration, unusual noise, excessive heat and oil leakage	O						
• Check parallel and angular alignment of coupling				M			
• Inspect all parts of reducer. Replace defective parts if necessary					M		
• Inspect motor for cleanliness, moisture, over loading and test insulation resistance of motor winding					E		
• Inspect idlers for broken or damaged parts. Make certain that all rolls turn freely and smoothly			M				
• Clean roller surfaces of accumulated material		M					
• Clean reducer with mineral spirits or kerosene				M			
• Clean motor. Use mineral spirits				E			
• Clean breather with a solvent and blow out with clean compressed air					M		
• Inspect pneumatic sludge plows		O					
• Refer to manufacturer's literature for trouble-shooting procedures							M
LUBRICATION							
• Lubricate bearings of chain coupling		M					
• Lubricate carrying and return idlers. Apply grease while the idlers are operating			M				
• Check oil level of reducer's reservoir in sight level gage. Replenish							M
• Check oil in reducer's reservoir for any signs of contamination. Drain and replace if necessary			M				
• Change oil in reducer's reservoir					M		
• Lubricate motor bearings in accordance with manufacturer's recommendation. Do not over grease					E		

SLUDGE DEWATERING FACILITY (032)
PLANT WATER PUMPING EQUIPMENT
032-022-01-0000 THROUGH 032-022-03-0000

MAINTENANCE TASK	FREQUENCY						
	D	W	M	Q	SA	A	O
PLANT WATER PUMPS							
• Check for unusual noise and excessive vibration	O						
• Check bearing temperature; bearing temperature should not be 120 degrees F above the surrounding temperature	O	M					
NOTES Operators are required to manually check the temperature of bearings daily. Mechanical Maintenance Personnel are required to check the temperature of bearing with a temperature sensing device, as recommended by the manufacturer weekly.							
• Check mechanical seal for leakage	O						
• Replace mechanical seal if required. Refer to manufacturer's literature for procedure							M
• Clean bearing housing and bearings. Use kerosene or mineral spirits. Repack with clean ball-bearing grease. Check that water slingers are in correct places						M	
• Check for misalignment of coupling and shaft						M	
• Check shaft and shaft sleeve for scoring						M	
• Check coupling for wear						M	
• Refer to manufacturer's literature for trouble-shooting procedures							M
MOTOR							
• Check for unusual noise, excessive vibration and any other abnormal conditions	O						
• Check operating temperature of motor bearings; bearing temperature should not be 120 degrees F above the surrounding temperature	O	M					

SLUDGE DEWATERING FACILITY (032)
PLANT WATER PUMPING EQUIPMENT
032-022-01-0000 THROUGH 032-022-03-0000 (cont.)

MAINTENANCE TASK	FREQUENCY						
	D	W	M	Q	SA	A	O
MOTOR (cont.)							
NOTES							
Operators are required to manually check the temperature of motor bearing daily.							
Mechanical Maintenance Personnel are required to check the temperature of motor bearings with a temperature sensing device, as recommended by the motor manufacturer weekly.							
• Check terminal connections, assembly screws, bolts and nuts for tightness							E
• Examine starter, switch, fuses and other control		E					
• Test insulation resistance of motor winding. Refer to manufacturer's literature for instruction						E	
• Clean the motor inside and outside. Use dry compressed air for dust and dry dirt and mineral spirits for accumulated sticky dirt and grease		M					
NOTE							
Do not use gasoline or other inflammable solvents.							
LUBRICATION							
• Lubricate pump bearings with ball bearing grease. Do not over grease				M			
• Lubricate bearings of coupling through grease fittings in accordance with manufacturer's recommended procedure					E		
• Lubricate motor bearings in accordance with manufacturer recommendation. Do not over grease							E

SLUDGE DEWATERING FACILITY (032)
EFFLUENT WATER BOOSTER PUMPING EQUIPMENT
032--163-01-0000, 032-163-02-0000, 032-163-04-0000 AND 032-163-05-0000

MAINTENANCE TASK	FREQUENCY						
	D	W	M	Q	SA	A	O
EFFLUENT WATER BOOSTER PUMPS							
• Check for unusual noise and excessive vibration	O						
• Check bearing temperature; bearing temperature should not be 120 degrees F above the surrounding temperature	O	M					
NOTES Operators are required to manually check the temperature of bearings daily. Mechanical Maintenance Personnel are required to check the temperature of bearing with a temperature sensing device, as recommended by the manufacturer weekly.							
• Check mechanical seal for leakage	O						
• Replace mechanical seal if required. Refer to manufacturer's literature for procedure							M
• Clean bearing housing and bearings. Use Kerosene or mineral spirits. Repack with clean ball-bearing grease. Check that water slingers are in correct places						M	
• Check for misalignment of coupling and shaft						M	
• Check shaft and shaft sleeve for scoring						M	
• Check coupling for wear						M	
• Refer to manufacturer's literature for trouble-shooting procedures							M
MOTOR							
• Check for unusual noise, excessive vibration and any other abnormal conditions	O						
• Check operating temperature of motor bearings; bearing temperature should not be 120 degrees F above the surrounding temperature	O	M					

SLUDGE DEWATERING FACILITY (032)
EFFLUENT WATER BOOSTER PUMPING EQUIPMENT
032--163-01-0000, 032-163-02-0000, 032-163-04-0000 AND 032-163-05-0000 (cont.)

MAINTENANCE TASK	FREQUENCY						
	D	W	M	Q	SA	A	O
MOTOR (cont.)							
NOTES							
Operators are required to manually check the temperature of motor bearings daily.							
Mechanical Maintenance Personnel are required to check the temperature of motor bearings with a temperature sensing device, as recommended by the motor manufacturer weekly.							
• Check terminal connections, assembly screws, bolts and nuts for tightness							E
• Examine starter, switch, fuses and other control		E					
• Test insulation resistance of motor winding. Refer to manufacturer's literature for instruction						E	
• Clean the motor inside and outside. Use dry compressed air for dust and dry dirt and mineral spirits for accumulated sticky dirt and grease		M					
NOTE							
Do not use gasoline or other inflammable solvents.							
LUBRICATION							
• Lubricate pump bearings with ball-bearing grease. Do not over grease				M			
• Lubricate bearings of coupling through grease fittings in accordance with manufacturer's recommended procedure					E		
• Lubricate motor bearings in accordance with manufacturer recommendation. Do not over grease							E

SLUDGE DEWATERING FACILITY (032)
PLANT AIR COMPRESSOR EQUIPMENT
032-020-01-0000

MAINTENANCE TASK	FREQUENCY						
	D	W	M	Q	SA	A	O
AIR COMPRESSOR EQUIPMENT							
• Perform overall visual inspection for loose bolts, connections and wiring; note leaks	O						
• Check the entire system for unusual noise or excessive vibration	O						
• Check the entire installation for air leaks		O					
• Clean the unit by wiping it down	O						
• Check foundation bolts tightness						M	
• Check sheave alignment							M
• Check for proper belt tension. Adjust if necessary							M
• Drain accumulated moisture from the strainer; drain all condensate traps	O						
• Inspect and clean, if necessary, crankcase breather					M		
• Clean oil strainer; use nonflammable cleaning solvent						M	
• Drain and clean filter shell; install new oil filter element and add one quart at shell					M		
• Inspect piston ring for wear and free movement						M	
• Check piston rod packing for leaks			M				
• Inspect oil scraper rings for leakage. Replace if necessary			M				
• Inspect cylinder liner for scoring. Replace if necessary, and install new gasket					M		
• Inspect air intake filter; clean if necessary			M				
• Check all safety devices for proper operation					I		
• Inspect pressure switches					E		
• Inspect all valves. Replace faulty parts					M		

SLUDGE DEWATERING FACILITY (032)
PLANT AIR COMPRESSOR EQUIPMENT
032-020-01-0000 (cont.)

MAINTENANCE TASK	FREQUENCY						
	D	W	M	Q	SA	A	O
AIR COMPRESSOR EQUIPMENT (cont.)							
• Clean solenoid valves, when leakage occurs. Inspect and replace worn or damaged parts					M		
• Clean motor. Use mineral spirits					E		
• Refer to manufacturer's literature for trouble shooting procedures and for repair procedures							M
NOTE All air pressure must be relieved from compression cylinder before making repairs.							
LUBRICATION							
• Check oil level; keep filled to oil level sight glass of crankcase	O						
• Change crankcase oil in accordance with manufacturer's literature							M
• Lubricate electric motor in accordance with manufacturer recommendation							E

SLUDGE DEWATERING FACILITY (032)
HOISTING EQUIPMENT
032-009-01-0000 THROUGH 032-009-03-0000

MAINTENANCE TASK	FREQUENCY						
	D	W	M	Q	SA	A	O
HOISTING EQUIPMENT - GENERAL							
• Check all functional operating mechanisms for any maladjustments that may interfere with proper operation			M				
• Check that warning labels, push button markings or capacity markings have not been removed or are illegible					M		
• Check bolts, nuts and rivets for tightness					M		
• Check brake system for excessive wear and drift					M		
• For detailed maintenance procedures, refer to manufacturer's literature							M
HOOKS							
• Check for deformation and chemical damage			M				
• Check throat opening; replace if bent from normal opening			M				
• Check for twist of hook eye or hook; replace if twisted			M				
• Check if hook eye or hook is bent; replace if bent			M				
• Check for hinge action wear at point of contact and elongation of hook eye			M				
LOAD BEARING CABLE							
• Check load bearing cable for wear, twist, distortion, kinks, strand breaks, improper dead ending, replace cable if conditions described above are excessive			M				
LUBRICATION							
• Check gear oil; maintain level at oil bath			M				
• Lubricate bearings through a grease fitting					M		
• Lubricate shafts					M		

SLUDGE DEWATERING FACILITY (032)
SUPPLY FANS
032-048-01-0000 THROUGH 032-048-05-0000

MAINTENANCE TASK	FREQUENCY						
	D	W	M	Q	SA	A	O
SUPPLY FANS							
• Check for unusual noise and vibration. If noises develop, check the fan for worn bearings, proper installation and anchoring and for adequate clearance of rotating members							M
LUBRICATION							
• Lubricate fan shaft ball bearings. Add grease with the fan running					M		
NOTE Use low pressure grease gun only.							
• Lubricate motor bearings. Apply grease while motor is running. Do not over grease					M		

SLUDGE DEWATERING FACILITY (032)
AIR CONDITIONING EQUIPMENT
032-051-01-0000 THROUGH 032-051-03-0000

MAINTENANCE TASK	FREQUENCY						
	D	W	M	Q	SA	A	O
AIR CONDITIONING EQUIPMENT							
• Inspect air filters and replace if needed			M				
• Inspect unit coils. Clean if necessary					M		
• Inspect unit casing and accessories for paint chipping or corrosion. If damage is found, clean and repaint						M	
• Clean fan wheels and fan shaft. If rust is found on the fan shaft, remove with emery cloth and recoat						M	
• Check condensate drain line and drain pan for sludge or other foreign material						M	
• Check damper linkage, setscrews and blade adjustment for proper operation						M	
• Check refrigeration system for leaks				M			
• Check thermostat control for proper operation. Refer to manufacturer's literature for instructions							I
• Refer to manufacturer's literature for trouble-shooting procedures							M
• Inspect the activated carbon canister and replace if necessary. Refer to manufacturer's literature for replacing procedure							M
FAN BEARINGS							
• If noises develop, check all bearing races and locking devices for tightness, check the fan for worn bearings and for adequate clearance of rotating members					M		
FAN MOTOR							
• Check for excessive vibration and high temperature			O				
LUBRICATION							
• Lubricate fan bearings. Do not over lubricate. Add grease only while fan is operating					M		
• Lubricate motor in accordance with manufacturer instruction					E		

SLUDGE DEWATERING FACILITY (032)
EXHAUST FANS
032-056-01-0000 THROUGH 032-056-04-0000

MAINTENANCE TASK	FREQUENCY						
	D	W	M	Q	SA	A	O
EXHAUST FAN							
• Check for unusual noise and excessive vibration		O					
• Inspect fan wheels, shafts, housing scroll and side liners for corrosion or abrasive wear. Replace if necessary					M		
• Check all bolts and all connections for tightness					M		
• Clean housing, wheels, louvers, inlet and outlet ductwork of dust and dirt					M		
• Check for worn or damage belt. Replace if necessary					M		
• Clean alignment of sheaves and belt tension					M		
• Clean dampers and check for freedom of movement, corrosion and erosion					M		
• Check alignment of all parts					M		
LUBRICATION							
• Lubricate fan bearings					M		
• Lubricate motor bearings according to the manufacturer's recommendations. Do not over lubricate			E				

SLUDGE DEWATERING FACILITY (032)
MAGNETIC POLYMER FEED FLOWMETERS
032-036-01-0000 THROUGH 032-036-06-0000 AND 032-036-02-0000 THROUGH 032-036-25-0000

MAINTENANCE TASK	FREQUENCY						
	D	W	M	Q	SA	A	O
MAGNETIC METER							
• Check for proper operation of metering system. Perform static test of line power, reference and control signal, current output, magnetic drive and coils, ultrasonic generator and metering electrodes					I		
• Replace metering tube if meter electrode assemblies are corroded or shorted and liner is worn; after reinstallation perform alignment procedure							I
• Perform dynamic performance check to verify accuracy and proper performance of electronic circuitry of flow converter. If accuracy is not within specified tolerance recalibrate converter					I		
• For detailed checking and replacement procedures of metering system refer to manufacturer's literature							I
• Refer to manufacturer's literature for trouble-shooting procedures							I

SLUDGE DEWATERING FACILITY (032)
FLOWMETER
032-036-26-0000

MAINTENANCE TASK	FREQUENCY						
	D	W	M	Q	SA	A	O
MAGNETIC METER							
• Check for proper operation of metering system. Perform static test of line power, reference and control signal, current output, magnetic drive and coils, ultrasonic generator and metering electrodes					I		
• Replace metering tube if meter electrode assemblies are corroded or shorted and liner is worn; after reinstallation perform alignment procedure							I
• Perform dynamic performance check to verify accuracy and proper performance of electronic circuitry of flow converter. If accuracy is not within specified tolerance recalibrate converter					I		
• For detailed checking and replacement procedures of metering system refer to manufacturer's literature							I
• Refer to manufacturer's literature for trouble-shooting procedures							I

SLUDGE DEWATERING FACILITY (032)
MAGNETIC SLUDGE FLOWMETERS
032-036-12-0000 THROUGH 032-036-17-0000, AND 032-036-27-0000 THROUGH 032-036-29-0000

MAINTENANCE TASK	FREQUENCY						
	D	W	M	Q	SA	A	O
MAGNETIC METER							
• Check for proper operation of metering system. Perform static test of line power, reference and control signal, current output, magnetic drive and coils, ultrasonic generator and metering electrodes					I		
• Replace metering tube if meter electrode assemblies are corroded or shorted and liner is worn; after reinstallation perform alignment procedure							I
• Perform dynamic performance check to verify accuracy and proper performance of electronic circuitry of flow converter. If accuracy is not within specified tolerance recalibrate converter					I		
• For detailed checking and replacement procedures of metering system refer to manufacturer's literature							I
• Refer to manufacturer's literature for trouble-shooting procedures							I

SLUDGE DEWATERING FACILITY (032)
MAGNETIC EFFLUENT WATER FLOWMETER
032-036-30-0000 AND 032-036-31-0000

MAINTENANCE TASK	FREQUENCY						
	D	W	M	Q	SA	A	O
MAGNETIC METER							
• Check for proper operation of metering system. Perform static test of line power, reference and control signal, current output, magnetic drive and coils, ultrasonic generator and metering electrodes					I		
• Replace metering tube if meter electrode assemblies are corroded or shorted and liner is worn; after reinstallation perform alignment procedure							I
• Perform dynamic performance check to verify accuracy and proper performance of electronic circuitry of flow converter. If accuracy is not within specified tolerance recalibrate converter					I		
• For detailed checking and replacement procedures of metering system refer to manufacturer's literature							I
• Refer to manufacturer's literature for trouble-shooting procedures							I

SLUDGE DEWATERING FACILITY (032)
MAGNETIC DIGESTED SLUDGE FLOWMETER
032-036-32-0000

MAINTENANCE TASK	FREQUENCY						
	D	W	M	Q	SA	A	O
MAGNETIC METER							
• Check for proper operation of metering system. Perform static test of line power, reference and control signal, current output, magnetic drive and coils, ultrasonic generator and metering electrodes					I		
• Replace metering tube if meter electrode assemblies are corroded or shorted and liner is worn; after reinstallation perform alignment procedure							I
• Perform dynamic performance check to verify accuracy and proper performance of electronic circuitry of flow converter. If accuracy is not within specified tolerance recalibrate converter					I		
• For detailed checking and replacement procedures of metering system refer to manufacturer's literature							I
• Refer to manufacturer's literature for trouble-shooting procedures							I

SLUDGE DEWATERING FACILITY (032)
BELT SPRAY WATER FLOWMETERS
032-036-18-0000 AND 032-036-19-0000

MAINTENANCE TASK	FREQUENCY						
	D	W	M	Q	SA	A	O
MAGNETIC METER							
• Check for proper operation of metering system. Perform static test of line power, reference and control signal, current output, magnetic drive and coils, ultrasonic generator and metering electrodes					I		
• Replace metering tube if meter electrode assemblies are corroded or shorted and liner is worn; after reinstallation perform alignment procedure							I
• Perform dynamic performance check to verify accuracy and proper performance of electronic circuitry of flow converter. If accuracy is not within specified tolerance recalibrate converter					I		
• For detailed checking and replacement procedures of metering system refer to manufacturer's literature							I
• Refer to manufacturer's literature for trouble-shooting procedures							I

SLUDGE HEAT DRYING FACILITY (035)
ELEVATING BELT CONVEYOR
035-090-08-0000 AND 035-090-09-0000

MAINTENANCE TASK	FREQUENCY						
	D	W	M	Q	SA	A	O
ELEVATING BELT CONVEYOR							
• Check oil level in gear reducer and if needed check for unusual noise, wear, etc.			M				
• Lubricate bearings using Amalie LC-2 brown grease.			M				
• Check general condition of unit overall, record and report problems.			M				
• Check shafts and belt alignment.			M				
• Check belt tension, check belts for wear; replace if needed.			M				
• Drain-flush and refill oil reservoir with 2.25 quarts of Mobil 630 SAE 40 WT.					M		
• Lubricate motor bearings using Chevron SRI-2 grease only as per manufacturer's specifications.					E		
• Check overall condition of unit; MEG motor check and record amps.					E		

SLUDGE HEAT DRYING FACILITY (035)
HORIZONTAL BELT CONVEYOR TO WET SLUDGE STORAGE BIN
035-090-10-0000 AND 035-090-11-0000

MAINTENANCE TASK	FREQUENCY						
	D	W	M	Q	SA	A	O
HORIZONTAL BELT CONVEYOR							
• Check oil level in gear reducer and if needed check for unusual noise, wear, etc.			M				
• Lubricate bearings using Amalie LC-2 brown grease.			M				
• Check general condition of unit overall, record and report problems.			M				
• Check shafts and belt alignment.			M				
• Check belt tension, check belts for wear; replace if needed.			M				
• Drain-flush and refill oil reservoir with 2.25 quarts of Mobil 630 SAE 40 WT.					M		
• Lubricate motor bearings using Chevron SRI-2 grease only as per manufacturer's specifications.					E		
• Check overall condition of unit; MEG motor check and record amps.					E		

SLUDGE HEAT DRYING FACILITY (035)
WET SLUDGE WEIGHT INDICATORS
035-257-01-0000 AND 035-257-02-0000

MAINTENANCE TASK	FREQUENCY						
	D	W	M	Q	SA	A	O
WET SLUDGE WEIGHT INDICATORS							
• Check weight load cells for proper readout.	O						
• Keep the scale and scale area clean and free from material buildup that may impede the scale movement.	O						
• Check calibration of scale for accuracy.				I			

SLUDGE HEAT DRYING FACILITY (035)
PNEUMATIC SLUDGE DIVERTER PLOW
032-255-03-0000 AND 032-255-04-0000

MAINTENANCE TASK	FREQUENCY						
	D	W	M	Q	SA	A	O
PNEUMATIC SLUDGE DIVERTER PLOW							
• Check limit switch(es) for proper operation, tightness, and wear.			M				
• Check for air leaks in the hydraulic cylinder.			M				
• Check stroke speed of cylinder.			M				
• Check mechanical condition of leading edge plow.			M				
• Tighten all attachment hardware (nuts, bolts, brackets).			M				

SLUDGE HEAT DRYING FACILITY (035)
PNEUMATIC SLUDGE DIVERTER PLOW
035-255-02-0000 AND 035-255-03-0000
035-255-05-0000 AND 035-255-06-0000

MAINTENANCE TASK	FREQUENCY						
	D	W	M	Q	SA	A	O
PNEUMATIC SLUDGE DIVERTER PLOW							
• Check limit switch(es) for proper operation, tightness and wear.			M				
• Check for air leaks in the hydraulic cylinder.			M				
• Check stroke speed of cylinder.			M				
• Check mechanical condition of leading edge plow.			M				
• Tighten all attachment hardware (nuts, bolts, brackets).			M				

SLUDGE HEAT DRYING FACILITY (035)
TRUCK UNLOADING STATION
LEVEL MONITOR
035-110-07-0000

MAINTENANCE TASK	FREQUENCY						
	D	W	M	Q	SA	A	O
TRUCK UNLOADING STATION							
• Remove and clean the level sensor when unit performance indicates need, typically by loss of echo.							I

SLUDGE HEAT DRYING FACILITY (035)
24-INCH ELEVATING CONVEYOR FROM
TRUCK UNLOADING STATION
035-090-12-0000

MAINTENANCE TASK	FREQUENCY						
	D	W	M	Q	SA	A	O
24-INCH ELEVATING CONVEYOR							
• Check oil level in gear reducer and if needed check for unusual noise, wear, etc.			M				
• Lubricate bearings using Amalie LC-2 brown grease.			M				
• Check general condition of unit overall, record and report problems.			M				
• Check shafts and belt alignment.			M				
• Check belt tension, check belts for wear; replace if needed.			M				
• Drain-flush and refill oil reservoir with 2.25 quarts of Mobil 630 SAE 40 WT.					M		
• Lubricate motor bearings using Chevron SRI-2 grease only as per manufacturer's specifications.					E		
• Check overall condition of unit; MEG motor check and record amps.					E		

SLUDGE HEAT DRYING FACILITY (035)
SCREW CONVEYOR TRUCK UNLOADING STATION
035-258-56-0000

MAINTENANCE TASK	FREQUENCY						
	D	W	M	Q	SA	A	O
SCREW CONVEYOR TRUCK UNLOADING STATION							
• Check oil level in gear reducer and if needed check for unusual noise, wear, etc.			M				
• Lubricate bearings using Amalie LC-2 brown grease.			M				
• Check general condition of unit overall, record and report problems.			M				
• Check shafts and belt alignment.			M				
• Check belt tension, check belts for wear; replace if needed.			M				
• Drain-flush and refill oil reservoir with 10 gallons of Mobil 630 SAE 40 WT.					M		
• Lubricate motor bearings using Chevron SRI-2 grease only as per manufacturer's specifications.					E		
• Check overall condition of unit; MEG motor check and record amps.					E		

SLUDGE HEAT DRYING FACILITY (035)
TRUCK UNLOADING STATION
SUBMERSIBLE SUMP PUMPS
035-008-01-0000 AND 035-008-02-0000

MAINTENANCE TASK	FREQUENCY						
	D	W	M	Q	SA	A	O
TRUCK UNLOADING STATION SUBMERSIBLE PUMPS							
• Check the operation of each pump (at the pump control panel).	O						
• Clean sumps of any debris.		O					
• Check each float switch for operation.			M				
• Check float switches, cables for deterioration, and/or insulation breaks. Check cables attaching hardware.			M				
• Check general condition of wires, conduit, start and stop control operation.				E			
• Record and report problems.				E			
• Raise and check pump for impeller clearance, buildup of debris, and general condition of impeller. Tighten all component nuts and bolts. Coordinate with electricians for electrical PM which is due to the same time.					M		

SLUDGE HEAT DRYING FACILITY (035)
MICROWAVE MOISTURE ANALYZER

MAINTENANCE TASK	FREQUENCY						
	D	W	M	Q	SA	A	O
MICROWAVE MOISTURE ANALYZER							
• Periodic inspection and cleaning of the door seals and cavity. Clean these areas with warm, soapy water applied with a soft cloth followed by drying with a soft dry cloth. Do not use abrasive cleaners or solvents for this purpose.							O
MICROWAVE LEAKAGE MEASUREMENTS							
• Periodic (once a week) microwave leakage measurement should be made to assure that the containment has not been breached through damage of the door seal/cavity assembly or debris lodged in the door seal itself.	O						

SLUDGE HEAT DRYING FACILITY (035)
WET SLUDGE STORAGE BINS
03-256-02-0000 AND 03-256-03-0000

MAINTENANCE TASK	FREQUENCY						
	D	W	M	Q	SA	A	O
WET SLUDGE STORAGE BINS							
• Check the exterior of the unit for structural fatigue (at its supporting structures).		O					
• Check the lower apex inner section for abrasive wear, rust, and/or corrosion.			M				
• Check screw conveyor through section (point of attachment) for bowing or sludge leaks.			O				
• Check the overhead catwalks for proper attachment and safety installation.	O						

SLUDGE HEAT DRYING FACILITY (035)
ULTRASONIC BIN LEVEL MONITOR
035-110-03-0000 THROUGH 035-110-06-0000

MAINTENANCE TASK	FREQUENCY						
	D	W	M	Q	SA	A	O
ULTRASONIC BIN LEVEL MONITOR							
• Remove and clean the level sensor when unit performance indicates need, typically by loss of echo.							I

SLUDGE HEAT DRYING FACILITY (035)
WET SLUDGE STORAGE BIN OUTLET SCREW CONVEYOR
035-258-16-0000 AND 035-258-30-0000

MAINTENANCE TASK	FREQUENCY						
	D	W	M	Q	SA	A	O
WET SLUDGE STORAGE BIN OUTLET SCREW CONVEYOR							
• Check oil level in gear reducer and if needed check for unusual noise, wear, etc.			M				
• Lubricate bearings using Amalie LC-2 brown grease.			M				
• Check general condition of unit overall, record and report problems.			M				
• Check shafts and belt alignment.			M				
• Check belt tension, check belts for wear; replace if needed.			M				
• Drain-flush and refill oil reservoir with 10 gallons of Mobil 630 SAE 40 WT.					M		
• Lubricate motor bearings using Chevron SRI-2 grease only as per manufacturer's specifications.					E		
• Check overall condition of unit; MEG motor check and record amps.					E		

SLUDGE HEAT DRYING FACILITY (035)
SLUDGE FEED SCREW CONVEYOR TO PUG MILL MIXING UNIT
035-258-17-0000 AND 035-258-31-0000

MAINTENANCE TASK	FREQUENCY						
	D	W	M	Q	SA	A	O
SLUDGE FEED SCREW CONVEYOR TO PUG MILL MIXING UNIT							
• Check oil level in gear reducer and if needed check for unusual noise, wear, etc.			M				
• Lubricate bearings using Amalie LC-2 brown grease.			M				
• Check general condition of unit overall, record and report problems.			M				
• Check shafts and belt alignment.			M				
• Check belt tension, check belts for wear; replace if needed.			M				
• Drain-flush and refill oil reservoir with 4.0 quarts of Mobil 630 SAE 40 WT.					M		
• Lubricate motor bearings using Chevron SRI-2 grease only as per manufacturer's specifications.					E		
• Check overall condition of unit; MEG motor check and record amps.					E		

SLUDGE HEAT DRYING FACILITY (035)
PUG MILL MIXING UNIT
035-261-03-0000 THROUGH 035-261-06-0000

MAINTENANCE TASK	FREQUENCY						
	D	W	M	Q	SA	A	O
PUG MILL MIXING UNIT							
• Check for unusual noises.	O						
• Inspection should be performed on the paddles to determine if paddle bolts are loosening and to retighten if necessary.			M				
• Check twin shafts for parallel alignment. Check sprockets, shafts and belt drive alignment and excessive wear.			M				
• Bolts with hold replaceable paddle tips must be inspected and retightened as necessary. The locking bolts for the spoke adjustment must be inspected to determine whether the paddle has rotated in its setting and the paddles readjusted if necessary. Obvious signs of wear will also be reviewed at this time.			M				
• If the material has built up excessively on the paddle spokes or the paddles themselves, the unit must be cleaned periodically or as required. Too much buildup will cause blinding of the unit resulting in either overflow or poor mixing.		O					
• Lubricate bearings with #2 grease.		M					
• Check oil bath level, replenish if necessary (1.5 gallons).		M					
MOTOR LUBRICATION							
• Lubricate motor bearings using Chevron SRI-2 grease only as per manufacturer's specifications. Check overall condition of unit; meg motor check and record amps.					E		
• Drain flush and refill gear reducer with new oil. Mobil DTE extra heavy (1.5 gallons).					M		

SLUDGE HEAT DRYING FACILITY (035)
PUG MILL MIXING UNIT (continued)
035-261-03-0000 THROUGH 035-261-06-0000

MAINTENANCE TASK	FREQUENCY						
	D	W	M	Q	SA	A	O
REDUCER LUBRICATION							
• Check oil level in gear reducer, add if needed.			M				
• Change oil in gear reducer.					M		
• Check for excess wear on drive chains and sprockets.					M		
Recommended Lubricants: Mobil - DTE Heavy (5 gallons).							
BEARINGS LUBRICATION							
• Regrease bearings every 12 weeks with grease gun.							E
Recommended Lubricants: Shell Dolium R, Gulf Crown #2, Texaco Premium RB							

SLUDGE HEAT DRYING FACILITY (035)
RECYCLE BIN
035-293-02-0000 AND 035-293-03-0000

MAINTENANCE TASK	FREQUENCY						
	D	W	M	Q	SA	A	O
RECYCLE BIN							
• Walk around the unit and look for any signs of air leaks.	O						
• Check the unit for any loose exterior heat shield material.	O						
• Check the unit for any obvious signs of hot spots.	O						

SLUDGE HEAT DRYING FACILITY (035)
RECYCLE BIN LEVEL MONITOR (2)

MAINTENANCE TASK	FREQUENCY						
	D	W	M	Q	SA	A	O
RECYCLE BIN LEVEL MONITOR							
• Remove and clean the level sensor when unit performance indicates need, typically by loss of echo.							I

SLUDGE HEAT DRYING FACILITY (035)
RECYCLE FEED TO PUG MILL MIXING UNIT SCREW CONVEYOR
035-258-21-0000 AND 035-258-35-0000

MAINTENANCE TASK	FREQUENCY						
	D	W	M	Q	SA	A	O
RECYCLE FEED TO PUG MILL MIXING UNIT SCREW CONVEYOR							
• Check oil level in gear reducer and if needed check for unusual noise, wear, etc.			M				
• Lubricate bearings using Amalie LC-2 brown grease.			M				
• Check general condition of unit overall, record and report problems.			M				
• Check shafts and belt alignment.			M				
• Check belt tension, check belts for wear; replace if needed.			M				
• Drain-flush and refill oil reservoir with 2.25 quarts of Mobil 630 SAE 40 WT.					M		
• Lubricate motor bearings using Chevron SRI-2 grease only as per manufacturer's specifications.					E		
• Check overall condition of unit; MEG motor check and record amps.					E		

SLUDGE HEAT DRYING FACILITY (035)
ROTARY DRUM DRYER WITH DIRECT FURNACE GAS BURNER
035-260-02-0000 AND 035-260-03-0000

MAINTENANCE TASK	FREQUENCY						
	D	W	M	Q	SA	A	O
ROTARY DRUM DRYER							
• Every 8 Hours							
- Drum Rollers - Lubricate all grease fittings							M
- Compressor Air Cleaner - Clean Element							M
• Drum Bands - Lubricate with proper oil	M						
• Drive Chains - Lubricate with oil	M						
• Drum Bases - Check anchor bolts for tightness, check drum flotation on rollers	M						
• Fan Unit - Clean foreign material trap	M						
• Primary and Secondary Fans - Lubricate all grease fittings		M					
• Combustion Blower - Lubricate all grease fittings		M					
• Conveyor and Drum Drive Reducers - Check oil level		M					
• Air Compressor - Check oil level		M					
• Burners - Check oil nozzle		M					
• Compressor - Check mounting bolts for tightness, and drive belts		M					
• Combustion blower - Check mounting bolts for tightness, and drive belts		M					
• Conveyor - Check all moving parts for wear and a-lignment		M					
• Drum bases - Check rollers and bearings		M					
• Check "V" belts and drive chain for wear, tension and alignment		M					

SLUDGE HEAT DRYING FACILITY (035)
ROTARY DRUM DRYER WITH DIRECT FURNACE GAS BURNER
035-260-02-0000 AND 035-260-03-0000

MAINTENANCE TASK	FREQUENCY						
	D	W	M	Q	SA	A	O
ROTARY DRUM DRYER (continued)							
• Fan Units - Check anchor bolts for tightness. Check alignment with drum, check drive belt for wear, tension and alignment		M					
• Every Two Weeks							
- Oil and Gas Throttling Valves - Lubricate with grease							M
• Reducer oil change					M		
• Drain, flush and refill reducer with turbine 220 oil (14 gallons).					M		
• Semiannual rotating dryer gear box motor, lubricate motor bearings using Chevron SRI-2 grease only as per manufacturer's specifications. Check overall condition of unit, meg, motor check and record amps.					E		
• Outlet Gaskets - Check for wear and alignment.			M				
• Every Two Months							
- Oil Filter - Replace Element.							M
• Every 500 Hours							
- Air Compressor - Drain and refill with oil.							M
• Fire Brick - Inspection and deterioration.					M		
• Conveyor and Drum Base Reducers - Drain and refill with oil.					M		
• Electric Motors - Clean motors.						E	
• Drum - Thoroughly inspect drum.						M	

SLUDGE HEAT DRYING FACILITY (035)
TRUCK LOADING STATION SCREW CONVEYOR
035-258-61-0000 AND 035-258-63-0000

MAINTENANCE TASK	FREQUENCY						
	D	W	M	Q	SA	A	O
TRUCK LOADING STATION SCREW CONVEYOR							
• Check oil level in gear reducer and if needed check for unusual noise, wear, etc.			M				
• Lubricate bearings using Amalie LC-2 brown grease.			M				
• Check general condition of unit overall, record and report problems.			M				
• Check shafts and belt alignment.			M				
• Check belt tension, check belts for wear; replace if needed.			M				
• Drain-flush and refill oil reservoir with 2.25 quarts of Mobil 630 SAE 40 WT.					M		
• Lubricate motor bearings using Chevron SRI-2 grease only as per manufacturer's specifications.					E		
• Check overall condition of unit; MEG motor check and record amps.					E		

SLUDGE HEAT DRYING FACILITY (035)
SLUDGE DRYING FURNACE AND COMBUSTION AIR BLOWERS
035-259-02-000 AND 035-259-03-000

MAINTENANCE TASK	FREQUENCY						
	D	W	M	Q	SA	A	O
COMBUSTION BLOWER							
• Lubricate grease fittings	M						
• Check all moving parts for wear and alignment	M						
• Gas throttling valve - lubricate			M				

SLUDGE HEAT DRYING FACILITY (035)
SCREW CONVEYOR FROM DUAL CYCLONE TO RECYCLE FEED CONVEYOR
035-258-19-0000 AND 035-258-33-0000

MAINTENANCE TASK	FREQUENCY						
	D	W	M	Q	SA	A	O
SCREW CONVEYOR							
• Check oil level in gear reducer and if needed check for unusual noise, wear, etc.			M				
• Lubricate bearings using Amalie LC-2 brown grease.			M				
• Check general condition of unit overall, record and report problems.			M				
• Check shafts and belt alignment.			M				
• Check belt tension, check belts for wear; replace if needed.			M				
• Drain-flush and refill oil reservoir with 2.25 quarts of Mobil 630 SAE 40 WT.					M		
• Lubricate motor bearings using Chevron SRI-2 grease only as per manufacturer's specifications.					E		
• Check overall condition of unit; MEG motor check and record amps.					E		

SLUDGE HEAT DRYING FACILITY (035)
SETTLING CHAMBER
035-291-02-0000 AND 035-291-03-0000

MAINTENANCE TASK	FREQUENCY						
	D	W	M	Q	SA	A	O
SETTLING CHAMBER							
• Inspect the unit for any signs of air leaks.	O						
• Check the unit for any loose exterior heat shield material.	O						
• Check the unit for any obvious signs of hot spots.	O						

SLUDGE HEAT DRYING FACILITY (035)
SCREW CONVEYOR FROM SETTLING CHAMBER TO VIBRATING SCREEN
035-258-18-0000 AND 035-258-32-0000

MAINTENANCE TASK	FREQUENCY						
	D	W	M	Q	SA	A	O
SCREW CONVEYOR							
• Check oil level in gear reducer and if needed check for unusual noise, wear, etc.			M				
• Lubricate bearings using Amalie LC-2 brown grease.			M				
• Check general condition of unit overall, record and report problems.			M				
• Check shafts and belt alignment.			M				
• Check belt tension, check belts for wear; replace if needed.			M				
• Drain-flush and refill oil reservoir with 2.25 quarts of Mobil 630 SAE 40 WT.					M		
• Lubricate motor bearings using Chevron SRI-2 grease only as per manufacturer's specifications.					E		
• Check overall condition of unit; MEG motor check and record amps.					E		

SLUDGE HEAT DRYING FACILITY (035)
CYCLONE SEPARATORS
035-294-03-0000 THROUGH 035-294-06-0000

MAINTENANCE TASK	FREQUENCY						
	D	W	M	Q	SA	A	O
CYCLONE SEPARATORS							
• Inspect the unit for any signs of air leaks	O						
• Check the unit for any loose exterior heat shield material.	O						
• Check the unit for any obvious signs of hot spots.	O						
• Check all nuts and bolts for tightness at that point where the rotary valves are connected to the cyclone.		M					

SLUDGE HEAT DRYING FACILITY (035)
VIBRATING SCREEN
035-295-02-0000 AND 035-295-03-0000

MAINTENANCE TASK	FREQUENCY						
	D	W	M	Q	SA	A	O
VIBRATING SCREENS							
• Inspect top screen and spout. Weight load on screen. Bump through PLC.	M						
• Tap and tighten down clamping rings if necessary. Examine unit for any loose parts. Tighten as needed.			M				
• Inspect screens for proper tension.			M				
• Check sliders for wear; when less than 1/2-inch, replace them.			M				
LUBRICATION							
• Once every 100 hours of operation or weekly, add 2 to 4 strokes of the bearing grease used in a hand gun to the inlet grease fitting while the motion generator is running. DO NOT overgrease the bearings. Refer to the recommended grease shown below. (Use of any other grease will void the warranty.)	E						
NOTE When installing a new or rebuilt motion generator into the unit, purge the old bearing grease out of the lube lines before connecting to a replacement motion generator by pumping new bearing grease in.							
RECOMMENDED GREASE							
For Ambients - 10°F to 105°F. Sweco, Inc. recommends using Texaco 1939 Premium RB grease in our motion generators.							
For Ambients Below - 10°F Sweco, Inc. recommends using Chevron Oil Company's Avi-Motive grease in our motion generators.							

SLUDGE HEAT DRYING FACILITY (035)
ROTARY VALVES
035-292-04-0000 THROUGH 035-292-09-0000
035-292-11-0000 THROUGH 035-292-14-0000

MAINTENANCE TASK	FREQUENCY						
	D	W	M	Q	SA	A	O
ROTARY VALVES							
• Check alignment and wear of chain drive and sprockets.			M				
• Check all bolts for tightness.			M				
• Maintain proper chain slack.			M				
• Check oil level in reducer; add oil if necessary.			M				
• Check packing gland adjustment, adjust if necessary; replace if needed.			M				
• Check for any unusual noises or excessive vibration.		M					
• Inspect seal strips for wear; replace if necessary.				M			
• Lubricate roller chain.		M					
• Drain, flush, and refill reducer with Mobil Super 600W. Check overall condition of unit.					M		
• Lubricate motor.					E		
• Lubricate motor bearings using Chevron SRI-2 grease only as per manufacturer's specifications. Check overall condition of unit; meg motor check and record amps.					E		
NOTE Not applicable to silo rotary cut-off valves.							

SLUDGE HEAT DRYING FACILITY (035)
VIBRATING SCREEN TO RECYCLE BIN SCREW CONVEYOR
035-258-24-0000 AND 035-258-28-0000

MAINTENANCE TASK	FREQUENCY						
	D	W	M	Q	SA	A	O
VIBRATING SCREEN							
• Check oil level in gear reducer and if needed check for unusual noise, wear, etc.			M				
• Lubricate bearings using Amalie LC-2 brown grease.			M				
• Check general condition of unit overall, record and report problems.			M				
• Check shafts and belt alignment.			M				
• Check belt tension, check belts for wear; replace if needed.			M				
• Drain-flush and refill oil reservoir with 2.25 quarts of Mobil 630 SAE 40 WT.					M		

SLUDGE HEAT DRYING FACILITY (035)
DRIED MATERIAL CRUSHER
035-296-02-0000 THROUGH 035-296-03-0000

MAINTENANCE TASK	FREQUENCY						
	D	W	M	Q	SA	A	O
DRIED MATERIAL CRUSHER							
• Check for unusual vibration of crusher system. Refer to manufacturer's literature for corrective action.			M				
• Check and tighten bolts, nuts and screws of crusher.			M				
• Inspect crusher liners and their fastener, wear plates, hammers and their pines. Readjust plates and hammers or replace damaged parts of equipment if necessary.			M				
• Check for proper balance in the rotor assembly.			M				
• Check operating temperature of mill's bearing. Temperature of bearing housing should range between 150 degrees F and 175 degrees F. If the temperature exceeds 200 degrees F, shut the mill down.			M				
• Check for unusual noise, vibration and heating of motor and reducer and for excessive current of motor.			M				
• Check motor's terminal connections, assembly screws, bolts and nuts for tightness.					E		
• Test insulation resistance of motor winding. Refer to manufacturer's literature for instructions.					E		
• Inspect all parts of reducer. Replace defective parts.					M		
• Check drive belt for proper tension. Adjust.			M				
• Check sheaves and belt for damage and excessive wear. Replace if necessary.			M				
• Check drive system for proper alignment.			M				

SLUDGE HEAT DRYING FACILITY (035)
DRIED MATERIAL CRUSHER (continued)
035-296-02-0000 AND 035-296-03-0000

MAINTENANCE TASK	FREQUENCY						
	D	W	M	Q	SA	A	O
LUBRICATION							
• Lubricate motor bearings using Chevron SRI-2 grease only as per manufacturer's specifications. Check overall condition of unit, meg motor, check and record amps.					E		
• Lubricate bearings of crusher. Check nameplate for recommended lubricant and refer to manufacturer's literature for proper procedures.	M						
• Lubricate bearings of reducer in accordance with manufacturer's recommended procedures.	M						
• Drain, flush, refill gearbox with new oil, Mobil DTE heavy (14 quarts). Check overall condition of unit.					M		

SLUDGE HEAT DRYING FACILITY (035)
CRUSHER RETURN SCREW CONVEYOR
035-258-23-0000 AND 035-258-37-0000

MAINTENANCE TASK	FREQUENCY						
	D	W	M	Q	SA	A	O
CRUSHER RETURN SCREW CONVEYOR							
• Check oil level in gear reducer and if needed check for unusual noise, wear, etc.			M				
• Lubricate bearings using Amalie LC-2 brown grease.			M				
• Check general condition of unit overall, record and report problems.			M				
• Check shafts and belt alignment.			M				
• Check belt tension, check belts for wear; replace if needed.			M				
• Drain-flush and refill oil reservoir with 4 quarts of Mobil 630 SAE 40 WT.					M		
• Lubricate motor bearings using Chevron SRI-2 grease only as per manufacturer's specifications.					E		
• Check overall condition of unit; MEG motor check and record amps.					E		

SLUDGE HEAT DRYING FACILITY (035)
VENTURI PARTICULATE SCRUBBER WITH CYCLONE SEPARATOR
035-297-02-0000 AND 035-298-02-0000
035-297-03-0000 AND 035-298-03-0000

MAINTENANCE TASK	FREQUENCY						
	D	W	M	Q	SA	A	O
VENTURI PARTICULATE SCRUBBER							
• If heavy slurries are being used as the scrubbing liquid, periodic inspections should be made at the sight ports, at the top of the venturi, to determine whether or not any material buildup has occurred. Such buildup may be easily removed by flushing with liquid or manually scraping clean.							O

SLUDGE HEAT DRYING FACILITY (035)
DRY PRODUCT TRANSFER SCREW CONVEYOR
FROM VIBRATING SCREEN TO PRODUCT CONVEYOR
035-258-48-0000 AND 035-258-55-0000

MAINTENANCE TASK	FREQUENCY						
	D	W	M	Q	SA	A	O
DRY PRODUCT TRANSFER SCREW CONVEYOR							
• Check oil level in gear reducer and if needed check for unusual noise, wear, etc.			M				
• Lubricate bearings using Amalie LC-2 brown grease.			M				
• Check general condition of unit overall, record and report problems.			M				
• Check shafts and belt alignment.			M				
• Check belt tension, check belts for wear; replace if needed.			M				
• Drain-flush and refill oil reservoir with 2.25 quarts of Mobil 630 SAE 40 WT.					M		
• Lubricate motor bearings using Chevron SRI-2 grease only as per manufacturer's specifications.					E		
• Check overall condition of unit; MEG motor check and record amps.					E		

SLUDGE HEAT DRYING FACILITY (035)
KNIFE GATE VALVE
035-047-01-0000 AND 035-047-02-0000

MAINTENANCE TASK	FREQUENCY						
	D	W	M	Q	SA	A	O
KNIFE GATE VALVE							
• Lubrication - 100 hours of operation NLGI #2 Lithium based grease.		M					
- Gate rollers (cam followers): The lubrication of these items is accomplished by means of zerk fittings installed on each roller. At the time of lubrication, check to ensure that the rollers turn freely, and when the roller is turned, that no inward and outward movement in the roller occurs. If this occurs, the cam follower should be replaced. Some special stainless steel cam followers do not require lubrication and hence have no zerk fittings.							
- Flange Bearings: The lubrication of flange bearings is necessary only if the bearings have a grease fitting installed. Most bearings utilized are bushing type of a bronze material, and require only light oiling. Upon installation of the gate/valve, lubrication is not necessary. all lubrication points are lubricated at the factory.							
- Gear Boxes (reducer, etc): Refer to manufacturer's recommendations listed in specific component data sheet(s).							
- Rod End Bearings: If the rod end has a zerk fitting it should be serviced at this time.							
INSPECTION/MAINTENANCE							
• Air pressure to the pneumatic circuit, 80 to 100 psi should be the normal operating range. Adjust the pressure regulator if necessary.	O						
• Check filter element - clean or replace element every month - or when abnormal contaminant buildup is evident.			M				

SLUDGE HEAT DRYING FACILITY (035)
KNIFE GATE VALVE (continued)
035-047-01-0000 AND 035-047-02-0000

MAINTENANCE TASK	FREQUENCY						
	D	W	M	Q	SA	A	O
INSPECTION/MAINTENANCE (cont)							
• Check lubricator daily to insure that lubrication is always present to the pneumatic parts.	O						
• Drain the air receiver of water. If automatic drain is used, disregard this step.	O						
• Check air circuitry for leakage.						M	
• Check condition of valve seals.						M	

SLUDGE HEAT DRYING FACILITY (035)
PRODUCT FLOW METER
035-036-04-0000 AND 035-036-05-0000

MAINTENANCE TASK	FREQUENCY						
	D	W	M	Q	SA	A	O
PRODUCT FLOW METER							
• Check if material is sticking to the sensing plate; if so, incorporate a program to ensure that the impingement area remains clean.							O
• Remove back cover and ensure that the damper is full and has no air bubbles.			M				
• Check to ensure the gasket at the front of the sensing head is in good condition.			M				
• Check for wearing of the sensing plate.			M				
• Hang test weight over calibration pulley and compare the reading to the last time this act was performed.					M		
• Check linearity of flowmeter by placing decrements of the test weight value over the calibration pulley.							M
• Example: If a 1-kg weight gives a reading of 80 percent, then a 750-gm weight would give a reading of 60 percent and 500-gm weight would give a reading of 40 percent, etc. NOTE Ensure that the calibration pulley jewel pivot are in food working order before performing linearity tests.							

SLUDGE HEAT DRYING FACILITY (035)
PRODUCT TO SILO SCREW CONVEYOR
035-258-47-0000 AND 035-258-54-0000

MAINTENANCE TASK	FREQUENCY						
	D	W	M	Q	SA	A	O
PRODUCT TO SILO SCREW CONVEYOR							
• Check oil level in gear reducer and if needed check for unusual noise, wear, etc.			M				
• Lubricate bearings using Amalie LC-2 brown grease.			M				
• Check general condition of unit overall, record and report problems.			M				
• Check shafts and belt alignment.			M				
• Check belt tension, check belts for wear; replace if needed.			M				
• Drain-flush and refill oil reservoir with 2.25 quarts of Mobil 630 SAE 40 WT.					M		
• Lubricate motor bearings using Chevron SRI-2 grease only as per manufacturer's specifications.					E		
• Check overall condition of unit; MEG motor check and record amp.					E		

SLUDGE HEAT DRYING FACILITY (035)
PRODUCT TO SILO SCREW CONVEYOR
035-258-46-0000 AND 035-258-53-0000

MAINTENANCE TASK	FREQUENCY						
	D	W	M	Q	SA	A	O
PRODUCT TO SILO SCREW CONVEYOR							
• Check oil level in gear reducer and if needed check for unusual noise, wear, etc.			M				
• Lubricate bearings using Amalie LC-2 brown grease.			M				
• Check general condition of unit overall, record and report problems.			M				
• Check shafts and belt alignment.			M				
• Check belt tension, check belts for wear; replace if needed.			M				
• Drain-flush and refill oil reservoir with 2.25 quarts of Mobil 630 SAE 40 WT.					M		
• Lubricate motor bearings using Chevron SRI-2 grease only as per manufacturer's specifications.					E		
• Check overall condition of unit; MEG motor check and record amp.					E		

SLUDGE HEAT DRYING FACILITY (035)
SILO LOADING SCREW CONVEYOR
035-258-45-0000

MAINTENANCE TASK	FREQUENCY						
	D	W	M	Q	SA	A	O
SILO LOADING SCREW CONVEYOR							
• Check oil level in gear reducer and if needed check for unusual noise, wear, etc.			M				
• Lubricate bearings using Amalie LC-2 brown grease.			M				
• Check general condition of unit overall, record and report problems.			M				
• Check shafts and belt alignment.			M				
• Check belt tension, check belts for wear; replace if needed.			M				
• Drain-flush and refill oil reservoir with 2.25 quarts of Mobil 630 SAE 40 WT.					M		
• Lubricate motor bearings using Chevron SRI-2 grease only as per manufacturer's specifications.					E		
• Check overall condition of unit; MEG motor check and record amp.					E		

SLUDGE HEAT DRYING FACILITY (035)
SILO LOADING SCREW CONVEYOR
035-258-51-0000

MAINTENANCE TASK	FREQUENCY						
	D	W	M	Q	SA	A	O
SILO LOADING SCREW CONVEYOR							
• Check oil level in gear reducer and if needed check for unusual noise, wear, etc.			M				
• Lubricate bearings using Amalie LC-2 brown grease.			M				
• Check general condition of unit overall, record and report problems.			M				
• Check shafts and belt alignment.			M				
• Check belt tension, check belts for wear; replace if needed.			M				
• Drain-flush and refill oil reservoir with 2.25 quarts of Mobil 630 SAE 40 WT.					M		
• Lubricate motor bearings using Chevron SRI-2 grease only as per manufacturer's specifications.					E		
• Check overall condition of unit; MEG motor check and record amp.					E		

SLUDGE HEAT DRYING FACILITY (035)
PRODUCT TO SILO SCREW CONVEYOR
035-258-52-0000

MAINTENANCE TASK	FREQUENCY						
	D	W	M	Q	SA	A	O
PRODUCT TO SILO SCREW CONVEYOR							
• Check oil level in gear reducer and if needed check for unusual noise, wear, etc.			M				
• Lubricate bearings using Amalie LC-2 brown grease.			M				
• Check general condition of unit overall, record and report problems.			M				
• Check shafts and belt alignment.			M				
• Check belt tension, check belts for wear; replace if needed.			M				
• Drain-flush and refill oil reservoir with 2.25 quarts of Mobil 630 SAE 40 WT.					M		
• Lubricate motor bearings using Chevron SRI-2 grease only as per manufacturer's specifications.					E		
• Check overall condition of unit; MEG motor check and record amps.					E		

SLUDGE HEAT DRYING FACILITY (035)
STORAGE SILOS
035-127-02-1000 THROUGH 035-127-05-1000

MAINTENANCE TASK	FREQUENCY						
	D	W	M	Q	SA	A	O
STORAGE SILOS							
• Annual inspection of structure for paint integrity and wear.						M	

SLUDGE HEAT DRYING FACILITY (035)
STORAGE SILO THERMOROPES
035-303-06-0000 THROUGH 035-303-25-0000

MAINTENANCE TASK	FREQUENCY						
	D	W	M	Q	SA	A	O
STORAGE SILO THERMOROPES							
• Operations should notify instrumentation of any faulty thermoropes as determined by erroneous alarm readings.	O						

SLUDGE HEAT DRYING FACILITY (035)
SILO KNIFE GATE INLET VALVE
035-047-03-0000 THROUGH 035-047-10-0000

MAINTENANCE TASK	FREQUENCY						
	D	W	M	Q	SA	A	O
SILO KNIFE GATE INLET VALVE							
• Lubrication - 100 hours of operation NLGI #2 Lithium based grease.		M					
- Gate rollers (cam followers): The lubrication of these items is accomplished by means of zerk fittings installed on each roller. At the time of lubrication, check to ensure that the rollers turn freely, and when the roller is turned, that no inward and outward movement in the roller occurs. If this occurs, the cam follower should be replaced. Some special stainless steel cam followers do not require lubrication and hence have no zerk fittings.							
- Flange Bearings: The lubrication of flange bearings is necessary only if the bearings have a grease fitting installed. Most bearings utilized are bushing type of a bronze material, and require only light oiling. Upon installation of the gate/valve, lubrication is not necessary. All lubrication points are lubricated at the factory.							
- Gear Boxes (reducer, etc): Refer to manufacturer's recommendations listed in specific component data sheet(s).							
- Rod End Bearings: If the rod end has a zerk fitting it should be serviced at this time.							
INSPECTION/MAINTENANCE							
• Air pressure to the pneumatic circuit, 80 to 100 psi should be the normal operating range. Adjust the pressure regulator if necessary.	O						
• Check filter element - clean or replace element every month - or when abnormal contaminant buildup is evident.			M				
• Check lubricator daily to insure that lubrication is always present to the pneumatic parts.	O						

SLUDGE HEAT DRYING FACILITY (035)
SILO KNIFE GATE INLET VALVE (continued)
035-047-03-0000 THROUGH 035-047-10-0000

MAINTENANCE TASK	FREQUENCY						
	D	W	M	Q	SA	A	O
INSPECTION/MAINTENANCE(cont.)							
• Drain the air receiver of water. If automatic drain is used, disregard this step.	O						
• Check air circuitry for leakage.						M	
• Check condition of valve seals.						M	

SLUDGE HEAT DRYING FACILITY (035)
STORAGE SILO LEVEL MONITORS
035-110-08-0000 THROUGH 035-110-11-0000

MAINTENANCE TASK	FREQUENCY						
	D	W	M	Q	SA	A	O
STORAGE SILO LEVEL MONITORS							
• Remove and clean the level sensor when unit performance indicates needs, typically by loss of echo.							I

SLUDGE HEAT DRYING FACILITY (035)
SILO BIN VENTS AND DUST COLLECTOR
035-304-04-0000 THROUGH 035-304-07-0000

MAINTENANCE TASK	FREQUENCY						
	D	W	M	Q	SA	A	O
SILO BIN VENTS AND DUST COLLECTOR							
• Check, replace cartridge every two years.							M

SLUDGE HEAT DRYING FACILITY (035)
SILO BIN VIBRATOR
035-306-02-0000 THROUGH 035-306-05-0000

MAINTENANCE TASK	FREQUENCY						
	D	W	M	Q	SA	A	O
SILO BIN VENTILATOR							
• The vibrator and controller should be kept relatively clean and free from excessive moisture.							O
NOTE Excessive wear to the armature stop ring will cause the armature to strike the core causing damage to the vibrator. If striking occurs, IMMEDIATELY deenergize the unit.							

SLUDGE HEAT DRYING FACILITY (035)
SILO UNLOADING SCREW CONVEYOR
035-258-65-0000 THROUGH 035-258-68-0000

MAINTENANCE TASK	FREQUENCY						
	D	W	M	Q	SA	A	O
SILO UNLOADING SCREW CONVEYOR							
• Check oil level in gear reducer and if needed check for unusual noise, wear, etc.			M				
• Lubricate bearings using Amalie LC-2 brown grease.			M				
• Check general condition of unit overall, record and report problems.			M				
• Check shafts and belt alignment.			M				
• Check belt tension, check belts for wear; replace if needed.			M				
• Drain-flush and refill oil reservoir with 2.25 quarts of Mobil 630 SAE 40 WT.					M		
• Lubricate motor bearings using Chevron SRI-2 grease only as per manufacturer's specifications.					E		
• Check overall condition of unit; MEG motor check and record amps.					E		

SLUDGE HEAT DRYING FACILITY (035)
TRUCK LOADING STATION SCREW CONVEYOR
035-258-60-0000 AND 035-258-62-0000

MAINTENANCE TASK	FREQUENCY						
	D	W	M	Q	SA	A	O
TRUCK LOADING STATION SCREW CONVEYOR							
• Check oil level in gear reducer and if needed check for unusual noise, wear, etc.			M				
• Lubricate bearings using Amalie LC-2 brown grease.			M				
• Check general condition of unit overall, record and report problems.			M				
• Check shafts and belt alignment.			M				
• Check belt tension, check belts for wear; replace if needed.			M				
• Drain-flush and refill oil reservoir with 2.25 quarts of Mobil 630 SAE 40 WT.					M		
• Lubricate motor bearings using Chevron SRI-2 grease only as per manufacturer's specifications.					E		
• Check overall condition of unit; MEG motor check and record amps.					E		

SLUDGE HEAT DRYING FACILITY (035)
TRUCK LOADING STATION DUST COLLECTOR
035-304-01-0000 AND 035-304-02-0000

MAINTENANCE TASK	FREQUENCY						
	D	W	M	Q	SA	A	O
TRUCK LOADING STATION DUST COLLECTOR							
• Record the collector pressure drop daily for at least the first 30 days of operation. Adverse operating conditions can be detected by a change in pressure drop. A magnehelic or photohelic gauge is supplied by AAF. This gauge will provide the pressure drop reading across the dust cake and fabric. After start-up its normal operating level which will be about 3" to 5" w.g.							O
• A regular inspection of the filter bags should be made at lest every 30 days. Any faulty or worn tubes must be replaced to prevent damage to the collector. The compressed air line regulator, dryer and filter should be checked for proper operation. Also inspect the dust discharge device onto the hopper outlet for proper operation.			M				
• Ducts leading to and from the collector should be inspected for dust buildup at least once every six months.					M		
• Examine the fabric tubes for wear with special attention to seams and stitching.					M		
• Examine internal components for wear.					M		
• Inspect all joints for evidence of air or dust leakage.					M		
• Check for evidence of moisture or dust buildup within the collector.					M		
• Check all electrical apparatus for proper operation.					M		
• Check to see if the diaphragm and solenoid valves are pulsing when energized by the timer.					M		
• Check discharge gas condition for signs of dust.					M		
• Inspect explosion vents.					M		

SLUDGE HEAT DRYING FACILITY (035)
TRUCK LOADING STATION DUST COLLECTOR (continued)
035-304-01-0000 AND 035-304-02-0000

MAINTENANCE TASK	FREQUENCY						
	D	W	M	Q	SA	A	O
TRUCK LOADING STATION DUST COLLECTOR (cont)							
• Latches must have the explosion venting feature tested periodically to insure that corrosion and/or buildup of foreign materials has not affected the mechanism. Under normal operating conditions, lubricate the bearing pin within the laminated cam with a light (SAE 10-30) oil.							M
(Refer to Bulletin CAD-3-1-B2 for additional instructions.)							
LUBRICATION							
• Refer to the motor manufacturer's recommendations for lubrication procedures for the fan motor.							E
• Belted drive units with final filters are supplied with external fan grease fittings located at the front top center of the unit. Otherwise, all lubrication fittings are accessible.							M
• Bearings on belted units should be lubricated with #2 grease every two months.							M

SLUDGE HEAT DRYING FACILITY (035)
TRUCK LOADING STATION TRUCK SCALE
035-305-01-0000 AND 035-305-02-0000

MAINTENANCE TASK	FREQUENCY						
	D	W	M	Q	SA	A	O
TRUCK LOADING STATION TRUCK SCALE							
• The area between the foundation and the bottom of the scale platform should be inspected periodically for foreign matter. Foreign matter should be removed if detected. This area can be washed down if desired.							O
• The top and sides of the platform are painted with an epoxy paint. This area will require occasional repainting. When repainting, ensure that the deck is clean and any rust removed and resurface with an epoxy paint. The easiest method is to use paint rollers. The temperature must be 60°F (15°C) or higher.							O
• Check the calibration of the scale.					O		
• Replace the desiccant blocks in the junction boxes.						O	

SLUDGE HEAT DRYING FACILITY (035)
DAMPERS
035-300-10-0000 THROUGH 035-300-15-0000
AND
035-300-20-0000 THROUGH 035-300-25-0000

MAINTENANCE TASK	FREQUENCY						
	D	W	M	Q	SA	A	O
DAMPERS							
• Check unit for mechanical looseness throughout, check damper shaft and arm for proper operation, inspect for corrosion, wear, etc. Record and report problems.			M				

SLUDGE HEAT DRYING FACILITY (035)
MAIN ID & AFTERBURNER EXHAUST FANS
035-302-02-0000 AND 035-302-03-0000
035-299-02-0000 AND 035-299-93-0000

MAINTENANCE TASK	FREQUENCY						
	D	W	M	Q	SA	A	O
EXHAUST FAN							
• Check for unusual noise and excessive vibration.		O					
• Inspect fan wheels, shafts, housing scroll and side liners for corrosion or abrasive wear. Replace if necessary.					M		
• Check all bolts and all connections for tightness.					M		
• Check housing, wheels, louvers, inlet and outlet duct work of dust and dirt.					M		
• Check for worn or damaged belt.					M		
• Check alignment of sheaves and belt tension.					M		
• Clean dampers and check for freedom of movement, corrosion and erosion.					M		
• Check alignment of all parts.					M		
• Change oil each 90 days. Drain, flush and refill with Mobil DTE extra heavy to proper level.				M			
LUBRICATION							
• Lubricate fan bearings.					M		
• Lubricate motor bearings using chevron SRI-2 grease only as per manufacturer's recommendations. Check overall condition of unit, meg motor. Check and record amps.					E		
• Check all electrical connections for proper condition, fit, wear, corrosion. Replace if needed.					E		
• Inspect all moving parts for wear.					M		

SLUDGE HEAT DRYING FACILITY (035)
AFTERBURNER FURNACE AND COMBUSTION AIR BLOWERS
035-301-02-0000 AND 035-301-03-0000

MAINTENANCE TASK	FREQUENCY						
	D	W	M	Q	SA	A	O
INLET/OUTLINE FLOW CONTROL: VALVES							
• Inspect valve packing.					M		
• Lubricate thrust washers.					M		
VALVE DRIVE SYSTEM							
• Change oil in reducer.					M		
• Lubricate all shaft bearings.					M		
• Lubricate pillow block bearings.					M		
• Lubricate SEHB-16 hanger bearing.					M		
• Lubricate 9R24 roller bearing.					M		
• Lubricate secondary drive pin.					M		
INSULATION							
• Inspect refractory lining for damage.						M	
ID EXHAUST FAN							
• Inspect all moving parts for wear and proper lubrication.		M					
• Inspect bearings for lubrication.			M				
• Lubricate bearings			M				
• Change oil, Mobil SCH 630.				M			
GAS BURNERS							
• Inspect for centering of mixing cone.							M
BURNERS GAS PIPE TRAIN							
• Perform leak test.				M			
ELECTRIC DAMPER OPERATORS							
• Inspect for proper lubrication.						M	

SLUDGE HEAT DRYING FACILITY (035)
CHEMICAL STORAGE TANKS
035-098-01-0000 AND 035-098-02-0000

MAINTENANCE TASK	FREQUENCY						
	D	W	M	Q	SA	A	O
CHEMICAL STORAGE TANKS							
• Inspect structure for coating integrity, wear, and leaks.						M	

SLUDGE HEAT DRYING FACILITY (035)
CHEMICAL STORAGE TANK LEVEL TRANSMITTERS
035-203-01-0000 AND 035-203-02-0000

MAINTENANCE TASK	FREQUENCY						
	D	W	M	Q	SA	A	O
LEVEL TRANSMITTERS							
• Monitor the temperature controller. Heater should come on at <50°F. Notify instrumentation of any problems with controller.	O						

SLUDGE HEAT DRYING FACILITY (035)
SODIUM HYDROCHLORIDE PUMPS, SODIUM HYDROXIDE PUMPS, ACID PUMPS
035-105-01-0000 AND 035-105-02-0000
035-112-01-0000 AND 035-112-02-0000
035-146-01-0000 AND 035-146-02-0000

MAINTENANCE TASK	FREQUENCY						
	D	W	M	Q	SA	A	O
CHEMICAL METERING PUMPS							
• Check chemical levels.	O						
• Check for proper flow rates and pressures.	O						
• Check plastic tubing and rigid piping and fitting for deterioration, leaks and bad connections.			M				
• Calibrate unit.			O				
• Check all piping and tubing for tightness.	O						
• Check all piping for leaks.	O						

SLUDGE HEAT DRYING FACILITY (035)
CHEMICAL RECIRCULATION PUMP
035-024-01-0000

MAINTENANCE TASK	FREQUENCY						
	D	W	M	Q	SA	A	O
CHEMICAL RECIRCULATION PUMP							
• Check unit for proper operation. Check all piping and connections for leakage.	O						
• Check overall condition of unit for leaks, strange noises, looseness, etc. Correct any problems found as needed. Check all chemical hose connections for cracks, tightness of fittings.			M				

SLUDGE HEAT DRYING FACILITY (035)
DUPLEX WATER SOFTENER SYSTEM
035-227-01-0000 AND 035-227-02-0000

MAINTENANCE TASK	FREQUENCY						
	D	W	M	Q	SA	A	O
PREVENTIVE MAINTENANCE							
• Check water softener brine tank salt level.	O						
• Check for proper flow rates and pressures.	O						
• Replace water filter.			M				

SLUDGE HEAT DRYING FACILITY (035)
CHEMICAL REACTION CHAMBER
035-103-01-0000 AND 035-103-02-0000

MAINTENANCE TASK	FREQUENCY						
	D	W	M	Q	SA	A	O
CHEMICAL REACTION CHAMBER							
• Check chemical levels.	O						
• Check for proper flow rates and pressures.	O						
• Visually inspect reaction chamber's interior drain opening to see that there are no drain obstructions. (Follow all safety procedures.)					M		
• Check plastic tubing and rigid piping and fittings for deterioration and leaks.						M	

SLUDGE HEAT DRYING FACILITY (035)
CHEMICAL SPRAY NOZZLES
035-267-01-0000

MAINTENANCE TASK	FREQUENCY						
	D	W	M	Q	SA	A	O
CHEMICAL SPRAY NOZZLES							
• Acid clean spray nozzles.		O					
• Mechanically clean QUAD spray nozzles.			M				
• Change out the bronze sintered filters for the odor control tower nozzles air supply system. Use filter #5882-13 as supplied by Florida Filters Inc. Take used filters and soak in solution of soap and water for a few days, then rinse and hose off with air.			M				

SLUDGE HEAT DRYING FACILITY (035)
CHEMICAL REACTION CHAMBER pH METER
035-036-01-0000 AND 035-036-02-0000

MAINTENANCE TASK	FREQUENCY						
	D	W	M	Q	SA	A	O
pH METER							
• Check calibration of pH meter.		O					
• Replace sensor when required.							I

SLUDGE HEAT DRYING FACILITY (035)
VANE AXIAL EXHAUST FAN
035-050-01-0000 AND 035-050-02-0000

MAINTENANCE TASK	FREQUENCY						
	D	W	M	Q	SA	A	O
EXHAUST FAN							
• Check the fan impeller for any buildup of foreign material or wear from abrasion. Both can cause excessive vibration which will lead to damage of the impeller if excessive wear is noticed. Carefully clean the impeller of any foreign material.			M				
• Check V-belt drives for proper alignment, tension, and excessive wear.			M				
• Lubricate the fan and motor bearings.			M				
• Tighten all bolts and set screws.			M				
• Grease fan bearings through provided extended lube fittings, 6 strokes required.			M				
• Check and observe operation of unit. Check fan belt proper tension and wear. Replace if needed.			M				
• Check and tighten all flange bolts.			M				
• Motor manufacturer's greasing instructions and recommendations should be followed closely. Avoid the use of a pressure greasing system which tends to fill the bearing chamber completely. Do not overgrease. Use only 1 or 2 shots with a hand gun in most cases. Maximum hand gun rating 40 psi. Rotate bearings during lubrication where good safety practice permits.			M				
• Check circuit breaker and cabinet for wear, corrosion, looser wires, etc.						E	
• Meg motor, record drawings and hour meter if so equipped.						E	
• Lube motor per manufacturer's specifications if grease fittings are installed.					E		
• Do not overlube; record and report problems.					E		

SLUDGE HEAT DRYING FACILITY (035)
AIR COMPRESSORS
035-020-01-0000 AND 035-020-02-0000

MAINTENANCE TASK	FREQUENCY						
	D	W	M	Q	SA	A	O
AIR COMPRESSORS							
• Prior to starting machine, check the fluid level in the sump. Should the level be low, add the necessary amount.	O						
• Check for proper flow rates and pressures.	O						
• Observe the instrument panel gauges and be sure they monitor the correct readings for that particular phase of operation.	O						
• A general check of the overall machine and instrument panel should be made to assure that the compressor is running properly.	O						
• Drain air filter.	O						
• Every 1000 Hours							
- Clean the return line strainer.							M
- Lubricate the Sullicon Control linkage.							M
- Replace the bearing filter element and clean or replace the main strainer element.							M
- Standard Machines only! Drain the sump and change the compressor fluid.							M
- Replace bearing filter and clean or replace main strainer element under any of the following conditions, whichever occur first:							M
As indicated by the maintenance indicator.							
Every 1,000 hours.							
Every 6 months.							
Standard Machines Only. Every fluid change.							

SLUDGE HEAT DRYING FACILITY (035)
AIR RECEIVING TANK
035-147-01-0000

MAINTENANCE TASK	FREQUENCY						
	D	W	M	Q	SA	A	O
AIR RECEIVING TANK							
• Drain water from the air receiver tank.	O						

SLUDGE HEAT DRYING FACILITY (035)
FIRE SPRINKLER SYSTEM

MAINTENANCE TASK	FREQUENCY						
	D	W	M	Q	SA	A	O
FIRE SPRINKLER SYSTEM							
• Coordinate periodic inspections through City of Tampa Fire Department.							O

SLUDGE HEAT DRYING FACILITY (035)
HALON FIRE SUPPRESSION SYSTEM
035-242-01-0000

MAINTENANCE TASK	FREQUENCY						
	D	W	M	Q	SA	A	O
HALON FIRE SUPPRESSION SYSTEM							
• Routine inspection and maintenance by contracted service with system supplier.							O

SLUDGE HEAT DRYING FACILITY (035)
ROOF EXHAUST FANS (ELECTRICAL ROOM & HALON EXHAUST)
035-056-02-0000 AND 035-056-03-0000

MAINTENANCE TASK	FREQUENCY						
	D	W	M	Q	SA	A	O
ROOF EXHAUST FAN							
• Check for unusual noise and excessive vibration.		O					
• Inspect fan wheels, shafts, housing scroll and side liners for corrosion or abrasive wear. Replace if necessary.					M		
• Check all boots and all connections for tightness.					M		
• Clean housing, wheels, louvers, inlet and outlet ductwork of dust and dirt.					M		
• Check for worn or damaged fan belt. Replace if necessary.					M		
• Check alignment of sheaves and belt tension.					M		
• Clean dampers and check for freedom of movement, corrosion and erosion.					M		
• Check alignment of all parts.					M		
LUBRICATION							
• Lubricate fan bearings.					M		
• Lubricate motor bearings according to the manufacturer's recommendation. Do not over lubricate.			E				

SLUDGE HEAT DRYING FACILITY (035)
ROOF EXHAUST FAN (BATHROOM)
035-056-001-0000

MAINTENANCE TASK	FREQUENCY						
	D	W	M	Q	SA	A	O
ROOF EXHAUST FAN							
• Check for unusual noise and excessive vibration. If noises develop, check the fan for worn bearings, proper installation and anchoring and for adequate clearance of rotating members.						M	

SLUDGE HEAT DRYING FACILITY (035)
DEEP BED SCRUBBER
035-194-01-0000

MAINTENANCE TASK	FREQUENCY						
	D	W	M	Q	SA	A	O
DEEP BED SCRUBBER							
• Change filters once each month (4) 2x24x24 Hi pleats req. PC# 19-3388-1911.			M				
• Inspect unit for wear or corrosion. Inspect door strips for sealing. Record and report problems.					M		
• Lube bearings once per 90 days. Do not overgrease; wipe off excess.				E			
• Heat drying mechanics purifal media. Change primary side #1 and secondary side #2. Annual change of media material on the primary side of scrubber unit. Take sample of old media for testing before removing. Notice: 800's are necessary on media for complete change out.						M	

FILTRATE PUMPING STATION
SUBMERSIBLE SEWAGE PUMPS
031-015-0000 AND 031-015-02-0000

MAINTENANCE TASK	FREQUENCY						
	D	W	M	Q	SA	A	O
SUBMERSIBLE SEWAGE PUMPS							
• Check impeller suction-side clearance gap for damage or excessive wear						M	
• Check supply cable for tears, scratches or blistering						M	
• Measure insulation resistance						E	
LUBRICATIONS							
• Change oil in accordance with manufacturer's recommendations							M

SLUDGE TREATMENT BUILDING AND THICKENING TANKS (030)
MIXERS
026-028-01-0000 AND 026-028-02-0000

MAINTENANCE TASK	FREQUENCY						
	D	W	M	Q	SA	A	O
MIXER							
• Check for unusual noise and excessive vibration	O						
• Inspect impeller for material buildup. Clean		O					
• Clean breather in a solvent					M		
• Check coupling alignment					M		
• tighten all mounting and coupling bolts					M		
• Check for oil leaks	O						
• Refer to manufacturer's literature for trouble-shooting procedures							M
MOTOR							
• Tighten assembly screws, bolts, nuts and terminal connections					M		
• Check operating temperature	O						
• Check insulation resistance of motor. If the resistance is lower than one megohm the windings should be dried					E		
• Clean windings using compressed air to remove dust and mineral spirits to remove grease and other adherent substance						E	
NOTE Do not use gasoline or other inflammable solvents.							
LUBRICATION							
• Check oil level; replenish if required	O						
• Lubricate bearings, couplings and seals							
• Check oil and grease for contamination					M		
• Change oil and add grease					M		
• Lubricate electric motor in accordance with manufacturer's recommendations. Do not over-grease					E		

SLUDGE TREATMENT BUILDINGAND THICKENING TANKS (030)
THICKENING TANK COLLECTOR DRIVE
026-081-01-0000 AND 026-081-02-0000

MAINTENANCE TASK	FREQUENCY						
	D	W	M	Q	SA	A	O
THICKENING TANK COLLECTOR							
• Check for minimal noise and vibration	O						
• Hose down and brush V-notch weirs, launders and scum box		O					
• Remove scum build-up from stilling well		O					
• Check for proper alignment of shafts and couplings					M		
• Check operating temperature	O						
• Tighten nuts and bolts					M		
LUBRICATION							
• Check oil level; add oil to maintain level		O					
• Change oil					M		
• Lubricate motor bearings in accordance with manufacturer's recommendations. Do not over-grease					M		

SLUDGE TREATMENT BUILDINGAND THICKENING TANKS (030)
SUMP PUMPS
030-008-01-0000 THROUGH 030-008-03-0000

MAINTENANCE TASK	FREQUENCY						
	D	W	M	Q	SA	A	O
SUMP PUMP							
• Check operating temperature of motor bearings; bearing temperature should not be above 200 degrees F	O	M					
NOTES Operators are required to manually check the temperature of motor bearings daily. Mechanical Maintenance Personnel are required to check the temperature of motor bearings with a temperature sensing device, as recommended by the motor manufacturer weekly.							
• Check for unusual noise and excessive vibration; refer to manufacturer's literature for cause and corrective action.	O						
• Check impeller clearance; adjust as required					M		
• Check coupling for wear and replace if necessary					M		
• Check for misalignment of coupling and shaft					M		
• Check shaft for straightness					M		
• Check water lubrication line for damage and tightness					M		
• Refer to manufacturer's literature for trouble-shooting procedures							M
LUBRICATION							
• Lubricate trust ball bearings			M				
• Lubricate electric motor in accordance with manufacturer recommendation. Do not over-grease							E

SLUDGE TREATMENT BUILDINGAND THICKENING TANKS (030)
HOISTING EQUIPMENT
030-009-01-0000

MAINTENANCE TASK	FREQUENCY						
	D	W	M	Q	SA	A	O
MONORAIL HOIST - GENERAL							
• Check all functional operating mechanisms for any maladjustments that may interfere with proper operation			M				
• Check that warning labels, push button markings or capacity markings have not been removed or are illegible					M		
• Check bolts, nuts and rivets for tightness					M		
• Check pins, bearings, shafts and gears for excessive wear, cracks, distortion and corrosion; replace defective parts					M		
• Check brake system for excessive wear and drift					M		
• Check electrical contactors, limit switches and push buttons for pitting, loose wires, deterioration and contact wear					E		
HOOKS							
• Check for deformation and chemical damage				M			
• Check throat openings; replace if bent from normal opening				M			
• Check for twists of hook eye or hook; replace of twisted				M			
• Check of hook eye or hook is bent; replace if bent				M			
• Check for hinge action wear at point of contact and elongation of hook eye				M			
LOAD BEARING ROPE							
• Check load bearing rope for wear, twist, distortion, kinks, strand breaks, improper dead ending; replace rope if conditions described above are excessive			M				
LUBRICATION							
• Lubricate rope						M	
• Lubricate bearings					M		
• Check gear oil; maintain level at oil bath			M				

SLUDGE TREATMENT BUILDINGAND THICKENING TANKS (030)
THICKENING TANK DILUTION WATER RATE CONTROLLERS
030-014-01-0000 and 030-014-02-0000

MAINTENANCE TASK	FREQUENCY						
	D	W	M	Q	SA	A	O
ELECTRIC CONTROL MODULE							
• Check dead band adjustment. Refer to manufacturer's literature for procedure							I
• For detailed maintenance procedures of instrumentation equipment, refer to manufacturer's literature							I
TRANSMITTER							
• Check for zero and test head signals					I		
• Check calibration and operation as recommended by manufacturer					I		
ELECTRIC VALVE OPERATOR							
• Check actuator for proper function					E		
• Inspect motor brushes. Replace if the brush length is less than 3/8 inch						E	
• Inspect change gears					E		
• Refer to manufacturer's literature for trouble-shooting procedures							E
LUBRICATION							
• Grease the gear teeth of valve operator					E		
• Brush grease onto the lead screw					E		

SLUDGE TREATMENT BUILDINGAND THICKENING TANKS (030)
MAGNETIC WASTE ACTIVATED SLUDGE FLOWMETER
030-036-06-0000

MAINTENANCE TASK	FREQUENCY						
	D	W	M	Q	SA	A	O
MAGNETIC METER							
• Check for proper operation of metering system. Perform static test of line power, reference and control signal, current output, magnetic drive and coils, ultrasonic generator and metering electrodes					I		
• Replace metering tube if meter electrode assemblies are corroded or shorted and liner is worn; after reinstallation perform alignment procedure							I
• Perform dynamic performance check to verify accuracy and proper performance of electronic circuitry of flow converter. If accuracy is not within specified tolerance, recalibrate converter.					I		
• For detailed checking and replacement procedures of metering system, refer to manufacturer's literature							I
• Refer to manufacturer's literature for trouble-shooting procedures							I

SLUDGE TREATMENT BUILDINGAND THICKENING TANKS (030)
POLYMER FEED PUMPS
030-068-01-0000; 030-068-02-0000; and 030-068-03-0000

MAINTENANCE TASK	FREQUENCY						
	D	W	M	Q	SA	A	O
POLYMER FEED PUMPS							
• Check for unusual noise and excessive vibration	O						
• Clean exterior of the pump					O		
• Replace packing when leakage can no longer be regulated by tightening the gland nuts. Refer to manufacturer's literature for procedure							M
• Clean bearing housing and bearings. Use mineral spirits. Repack with clean ball bearing grease					M		
• Check for misalignment of coupling and shaft						M	
• Check closures, ball bearings, drive shaft, seals, rotor, and stator for wear and damage. Replace if necessary							M
• Refer to manufacturer's literature for trouble-shooting procedures							M
MOTOR							
• Check for unusual noise, excessive vibration or any other abnormal conditions	O						
• Check operating temperature of motor bearings; bearing temperature should not be 120° F above the surrounding temperature	O	M					
NOTES Operators are required to manually check the temperature of motor bearings daily. Mechanical Maintenance Personnel are required to check the temperature of motor bearings with a temperature sensing device, as recommended by the motor manufacturer weekly.							
• Check terminal connections, assembly screws, bolts, and nuts for tightness						E	

SLUDGE TREATMENT BUILDINGAND THICKENING TANKS (030)
POLYMER FEED PUMPS (cont.)
030-068-01-0000; 030-068-02-0000; AND 030-038-03-0000

MAINTENANCE TASK	FREQUENCY						
	D	W	M	Q	SA	A	O
• Examine starter, switch, fuses, and other control		I					
• Test insulation resistance of motor winding. Refer to manufacturer's literature for instruction						E	
LUBRICATION							
• Lubricate bearings when shaft/bearing assembly is removed from the pump							E
• Lubricate gear joints when gear joints are disassembled.							E
• Lubricate motor bearings in accordance with manufacturer's recommendations. Do not over-grease.							E

SLUDGE TREATMENT BUILDINGAND THICKENING TANKS (030)
POLYMER FEED UNITS
030-087-01-0000 THROUGH 030-087-06-0000

MAINTENANCE TASK	FREQUENCY						
	D	W	M	Q	SA	A	O
POLYMER FEED UNITS							
• Flush system with plant water for 30 minutes when changing polymer types or brands or when removing unit from operation for any extended period of time							M
SOLENOID VALVE							
• Inspect internal valve parts for damage or excessive wear. Replace parts as necessary					E		
• Check for unusual noise, sluggish valve operation and excessive leaking. Clean valve as necessary							E
• Operate at least once a month to ensure proper opening and closing			O				
• Refer to manufacturer's literature for trouble-shooting procedures							E
LIQUID METERING PUMP							
• Check pump operation for proper prime conditions	O						
• Refer to manufacturer's literature for trouble-shooting procedures							M

SLUDGE TREATMENT BUILDINGAND THICKENING TANKS (030)
POLYMER TRANSFER PUMP
030-0607-01-0000

MAINTENANCE TASK	FREQUENCY						
	D	W	M	Q	SA	A	O
POLYMER TRANSFER PUMP							
• Check for unusual noise and excessive vibration	O						
• Clean exterior of pump					O		
• Replace packing when leakage can no longer be regulated by tightening the gland nuts. Refer to manufacturer's literature for procedure							M
• Clean bearing housing and bearings. Use mineral spirits. Repack with clean ball bearing grease					M		
• Check for misalignment of coupling and shaft						M	
• Check closures, ball bearings, drive shaft, seals, rotor, and stator for wear and damage. Replace if necessary							M
• Refer to manufacturer's literature for trouble-shooting procedures							M
MOTOR							
• Check for unusual noise, excessive vibration or any other abnormal conditions	O						
• Check operating temperature of motor bearings; bearing temperature should not be 120° F above the surrounding temperature	O	M					
NOTES							
Operators are required to manually check the temperature of motor bearings daily.							
Mechanical Maintenance Personnel are required to check the temperature of motor bearings with a temperature sensing device, as recommended by the motor manufacturer weekly.							
• Check terminal connections, assembly screws, bolts, and nuts for tightness						E	

SLUDGE TREATMENT BUILDINGAND THICKENING TANKS (030)
POLYMER TRANSFER PUMP (cont.)
030-067-01-0000

MAINTENANCE TASK	FREQUENCY						
	D	W	M	Q	SA	A	O
• Examine starter, switch, fuses and other control		I					
• Test insulation resistance of motor winding. Refer to manufacturer's literature for instructions						E	
LUBRICATION							
• Lubricate bearings when shaft/bearing assembly is removed from the pump							E
• Lubricate gear joints when gear joints are disassembled							E
• Lubricate motor bearings in accordance with manufacturer's recommendations. Do not over-grease							E

SLUDGE TREATMENT BUILDINGAND THICKENING TANKS (030)
PLANT WATER PUMPS
030-022-01-0000 AND 025-022-02-0000

MAINTENANCE TASK	FREQUENCY						
	D	W	M	Q	SA	A	O
PLANT WATER PUMPS							
• Check for unusual noise and excessive vibration	O						
• Check bearing temperature; bearing temperature should not be 120° F above the surrounding temperature	O	M					
• Check mechanical seal for leakage	O						
• Replace mechanical seal if required. Refer to manufacturer's literature for procedure							M
• Clean bearing housing and bearings. Use kerosene or mineral spirits. Repack with clean ball-bearing grease. Check that water slingers are in correct places						M	
• Check for misalignment of coupling and shaft						M	
• Check shaft and shaft sleeve for scoring						M	
• Check coupling for wear						M	
• Refer to manufacturer's literature for trouble-shooting procedures							M
MOTOR							
• Check for unusual noise, excessive vibration or any other abnormal conditions	O						
• Check operating temperature of motor bearings; bearing temperature should not be 120° F above the surrounding temperature	O	M					
NOTES							
Operators are required to manually check the temperature of motor bearings daily.							
Mechanical Maintenance Personnel are required to check the temperature of motor bearings with a temperature sensing device, as recommended by the motor manufacturer weekly.							

SLUDGE TREATMENT BUILDINGAND THICKENING TANKS (030)
PLANT WATER PUMPS (cont.)
030-022-01-0000; AND 030-022-02-0000

MAINTENANCE TASK	FREQUENCY						
	D	W	M	Q	SA	A	O
• Check terminal connections, assembly screws, bolts, and nuts for tightness						E	
• Examine starter, switch, fuses, and other control		I					
• Test insulation resistance of motor winding. Refer to manufacturer's literature for instruction						E	
• Clean the motor inside and outside. Use dry compressed air for dust and dry dirt and mineral spirits for accumulated sticky dirt and grease		M					
NOTE							
Do not use gasoline or other inflammable solvents.							
LUBRICATIONS							
• Lubricate pump bearings with ball-bearing grease. Do not over grease				M			
• Lubricate bearings of coupling through grease fittings in accordance with the manufacturer's recommended procedure					E		
• Lubricate motor bearings in accordance with manufacturer's recommendation. Do not over-grease							E

SLUDGE TREATMENT BUILDINGAND THICKENING TANKS (030)
SUPPLY FANS
030-048-01-0000 AND 030-048-02-0000

MAINTENANCE TASK	FREQUENCY						
	D	W	M	Q	SA	A	O
SUPPLY FAN							
• Check for unusual noise and excessive vibration. If noises develop, check the fan for worn bearings, proper installation and anchoring and for adequate clearance of rotating members							M
• Check condition of V-belt; replace if necessary					M		
• Check V-belt tension. If adjustment is made, check pulley alignment					M		
LUBRICATION							
• Lubricate fan bearings. Admit grease slowly until it shows up at seals. Do not over-grease					M		
NOTE Use low-pressure grease gun only.							
• Lubricate motor bearings according to the manufacturer's recommendation. Do not over-lubricate							E

SLUDGE TREATMENT BUILDINGAND THICKENING TANKS (030)
WASTE SLUDGE PUMPING EQUIPMENT
030-316-01-0000 AND 030-316-02-0000

MAINTENANCE TASK	FREQUENCY						
	D	W	M	Q	SA	A	O
WASTE SLUDGE PUMPING EQUIPMENT							
• Check for unusual noise and excessive vibration; refer to manufacturer's literature for cause and corrective action	O						
• Check temperature of seal box, if overheating. Seal may not be receiving adequate seal water flow; may require adjustment or replacement of components			M				
• Check operating temperature of motor bearings; bearing temperature should not be above 200 degrees F	O	M					
NOTES Operators are required to manually check the temperature of motor bearings daily. Mechanical Maintenance Personnel are required to check the temperature of motor bearings with a temperature sensing device, as recommended by the motor manufacturer weekly.							
• Check packing, all gaskets and "O" rings; replace if necessary						M	
• Clean motor. Use mineral spirit			E				
• Check alignment of pump, drive motor and gear reducer					M		
• Check water seal piping for damage and tightness					M		
• Refer to manufacturer's literature for trouble-shooting procedures	O						
LUBRICATION							
• Check for adequate supply of bearing lubricating oil in all reservoirs and refill as necessary				M			
• Inspect bearing oil for contamination with water or sludge. If necessary, drain old oil from the bearing housing, wash the bearing shaft assembly with clean benzine and refill. Add a few drops of oil to bearing seals before remounting assembly							E
• Lubricate motor bearings in accordance with manufacturer's recommendation. Do not over grease	O						

BELT THICKENER BUILDING (056)
HOISTING EQUIPMENT
056-009-01-0000

MAINTENANCE TASK	FREQUENCY						
	D	W	M	Q	SA	A	O
HOISTING EQUIPMENT							
• Check all functional operating mechanisms for any maladjustments that may interfere with proper operation			M				
• Check that warning labels, push button markings or capacity markings have not been removed or are illegible					M		
• Check bolts, nuts and rivets for tightness					M		
• Check pins, bearings, shafts and gears for excessive wear, cracks, distortion and corrosion; replace defective parts					M		
• Check brake system for excessive wear and drift					M		
• Check electrical contactors, limit switches and push buttons for pitting, loose wires, deterioration and contact wear					E		
HOOKS							
• Check for deformation and chemical damage				M			
• Check throat openings; replace if bent from normal opening				M			
• Check for twists of hook eye or hook; replace of twisted				M			
• Check of hook eye or hook is bent; replace if bent				M			
• Check for hinge action wear at point of contact and elongation of hook eye				M			
LOAD BEARING ROPE							
• Check load bearing rope for wear, twist, distortion, kinks, strand breaks, improper dead ending; replace rope if conditions described above are excessive			M				
LUBRICATION							
• Lubricate rope						M	
• Lubricate bearings					M		
• Check gear oil; maintain level at oil bath			M				

BELT THICKENER BUILDING (056)
MAGNETIC FLOWMETERS
056-036-01-0000 THROUGH 056-036-05-0000

MAINTENANCE TASK	FREQUENCY						
	D	W	M	Q	SA	A	O
MAGNETIC METER							
• Check for proper operation of metering system. Perform static test of line power, reference and control signal, current output, magnetic drive and coils, ultrasonic generator and metering electrodes					I		
• Replace metering tube if meter electrode assemblies are corroded or shorted and liner is worn; after reinstallation perform alignment procedure							I
• Perform dynamic performance check to verify accuracy and proper performance of electronic circuitry of flow converter. If accuracy is not within specified tolerance recalibrate converter					I		
• For detailed checking and replacement procedures of metering system refer to manufacturer's literature							I
• Refer to manufacturer's literature for trouble-shooting procedures							I

BELT THICKENER BUILDING (056)
SUPPLY FAN
056-048-01-0000

MAINTENANCE TASK	FREQUENCY						
	D	W	M	Q	SA	A	O
SUPPLY FAN							
• Check for unusual noise and excessive vibration. If noises develop, check the fan for worn bearings, proper installation and anchoring and for adequate clearance of rotating members							M
• Check condition of V-belt; replace if necessary					M		
• Check V-belt tension. If adjustment is made, check pulley alignment					M		
LUBRICATION							
• Lubricate fan bearings. Admit grease slowly until it shows up at seals. Do not over-grease					M		
NOTE Use low-pressure grease gun only.							
• Lubricate motor bearings according to the manufacturer's recommendation. Do not over-lubricate							E

BELT THICKENER BUILDING (056)
ROOF EXHAUST FANS
056-050-01-0000 THROUGH 056-050-05-0000

MAINTENANCE TASK	FREQUENCY						
	D	W	M	Q	SA	A	0
ROOF EXHAUST FAN							
• Check for unusual noise and excessive vibration. If noises develop, check the fan for worn belt and bearings, proper installation and anchoring and for adequate clearance of rotating members.						M	
• Clean the blades from accumulated foreign material.						M	
• Check V-Belt tension. If adjustment is made, check pulley alignment.						M	
• Check condition of belt on belt driven unit. Replace if necessary.						M	
NOTE If unit is to be left idle for an extended period, remove belts and store in cool, dry place.							
• Check motor for free movement and motor bearings for excessive wear.						E	
• Check shafts for alignment and sheaves for chipping, dents or rough surface.						M	
LUBRICATION							
• Consult information printed on motor for lubrication instructions.						M	

BELT THICKENER BUILDING (056)
AIR CONDITIONING EQUIPMENT
056-051-01-0000

MAINTENANCE TASK	FREQUENCY						
	D	W	M	Q	SA	A	O
AIR CONDITIONING EQUIPMENT							
• Inspect unit coils. Clean if necessary					M		
• Inspect unit casing and accessories for paint chipping or corrosion. If damage is found, clean and recoat						M	
• Clean fan wheels and fan shaft. If rust is found on the fan shaft, remove with emery cloth and recoat						M	
• Change dirty filter media				M			
• Check drain line for sludge or other foreign materials						M	
• If noises develop, check locking devices for tightness, all bearings for wear and for adequate clearance of rotating members							M
• Check all electrical terminals for tightness and electrical wires for damage						E	
• Check alignment of motors and driven shafts. Adjust if necessary					M		
• Check system for proper operation. Refer to manufacturer's literature for instruction							M
• Refer to manufacturer's literature for trouble-shooting procedures							M
LUBRICATION							
• Lubricate electric motor in accordance with manufacturer's instruction							E
• Lubricate fan bearings. Do not over grease					M		

BELT THICKENER BUILDING (056)
LIQUID POLYMER TRANSFER PUMP
056-067-01-0000

MAINTENANCE TASK	FREQUENCY						
	D	W	M	Q	SA	A	O
LIQUID POLYMER TRANSFER PUMP							
• Check for unusual noise and excessive vibration	O						
• Clean exterior of pump					O		
• Replace packing when leakage can no longer be regulated by tightening the gland nuts. Refer to manufacturer's literature for procedure							M
• Clean bearing housing and bearings. Use mineral spirits. Repack with clean ball bearing grease					M		
• Check for misalignment of coupling and shaft.						M	
• Check closures, ball bearings, drive shaft, seals, rotor and stator for wear and damage. Replace if necessary							M
• Refer to manufacturer's literature for trouble-shooting procedures							M
MOTOR							
• Check for unusual noise, excessive vibration or any other abnormal conditions.	O						
• Check operating temperature of motor bearings; bearing temperature should not be 120° F above the surrounding temperature	O	M					
NOTES							
Operators are required to manually check the temperature of motor bearings daily.							
Mechanical Maintenance Personnel are required to check the temperature of motor bearings with a temperature sensing device, as recommended by the motor manufacturer weekly.							
• Check terminal connections, assembly screws, bolts, and nuts for tightness						E	

BELT THICKENER BUILDING (056)
LIQUID POLYMER TRANSFER PUMP
056-067-01-0000 (continued)

MAINTENANCE TASK	FREQUENCY						
	D	W	M	Q	SA	A	O
MOTOR (continued)							
• Examine starter, switch, fuses and other control		I					
• Test insulation resistance of motor winding. Refer to manufacturer's literature for instructions						E	
LUBRICATION							
• Lubricate bearings when shaft/bearing assembly is removed from the pump							E
• Lubricate gear joints when gear joints are disassembled							E
• Lubricate motor bearings in accordance with manufacturer's recommendations. Do not over-grease							E

BELT THICKENER BUILDING (056)
LIQUID POLYMER FEED UNITS
056-068-01-0000 THROUGH 056-068-04-0000

MAINTENANCE TASK	FREQUENCY						
	D	W	M	Q	SA	A	O
POLYMER FEED UNITS							
• Flush system with plant water for 30 minutes when changing polymer types or brands or when removing unit from operation for any extended period of time							O
SOLENOID VALVE							
• Inspect internal valve parts for damage or excessive wear. Replace parts as necessary					E		
• Check for unusual noise, sluggish valve operation and excessive leaking. Clean valve as necessary							E
• Operate at least once a month to ensure proper opening and closing			O				
• Refer to manufacturer's literature for trouble-shooting procedures							E
LIQUID METERING PUMP							
• Check pump operation for proper prime conditions. Reprime if necessary	O						
• Refer to manufacturer's literature for trouble-shooting procedures.							M

BELT THICKENER BUILDING (056)
THICKENED SLUDGE PUMPING EQUIPMENT
056-082-01-0000 THROUGH 056-082-06-0000

MAINTENANCE TASK	FREQUENCY						
	D	W	M	Q	SA	A	O
THICKENED SLUDGE PUMPING EQUIPMENT							
• Check for unusual noise and excessive vibration; refer to manufacturer's literature for cause and corrective action	O						
• Check temperature of seal box, if overheating. Seal may not be receiving adequate seal water flow; may require adjustment or replacement of components			M				
• Check operating temperature of motor bearings; bearing temperature should not be above 200 degrees F	O	M					
NOTES Operators are required to manually check the temperature of motor bearings daily. Mechanical Maintenance Personnel are required to check the temperature of motor bearings with a temperature sensing device, as recommended by the motor manufacturer weekly.							
• Check packing, all gaskets and "O" rings; replace if necessary						M	
• Clean motor. Use mineral spirit			E				
• Check alignment of pump, drive motor and gear reducer					M		
• Check water seal piping for damage and tightness					M		
• Refer to manufacturer's literature for trouble-shooting procedures	O						
LUBRICATION							
• Check for adequate supply of bearing lubricating oil in all reservoirs and refill as necessary				M			
• Inspect bearing oil for contamination with water or sludge. If necessary, drain old oil from the bearing housing, wash the bearing shaft assembly with clean benzine and refill. Add a few drops of oil to bearing seals before remounting assembly							E
• Lubricate motor bearings in accordance with manufacturer's recommendation. Do not over grease	O						

BELT THICKENER BUILDING (056)
SLUDGE FEED PUMPING EQUIPMENT
056-156-01-0000 THROUGH 056-156-04-0000

MAINTENANCE TASK	FREQUENCY						
	D	W	M	Q	SA	A	O
SLUDGE FEED PUMPING EQUIPMENT							
• Check for unusual noise and excessive vibration; refer to manufacturer's literature for cause and corrective action	O						
• Check temperature of stuffing box			M				
• Check operating temperature of motor bearings; bearing temperature should not be above 200 degrees F	O	M					
NOTES Operators are required to manually check the temperature of motor bearings daily. Mechanical Maintenance Personnel are required to check the temperature of motor bearings with a temperature sensing device, as recommended by the motor manufacturer weekly.							
• Check packing, all gaskets and "O" rings; replace if necessary			E				
• Clean motor. Use mineral spirit						M	
• Check alignment of pump, drive motor and gear reducer					M		
• Check water seal piping for damage and tightness							
• Refer to manufacturer's literature for trouble-shooting procedures			M				
LUBRICATION							
• Lubricate pump bearings. Do not over grease							M
• Inspect bearing grease for contamination with water or sludge. If necessary, drain old grease from the bearing housing, wash the bearing shaft assembly with clean benzine and refill. Add a few drops of oil to bearing seals before remounting assembly				M			
• Lubricate motor bearings in accordance with manufacturer's recommendation. Do not over grease							E

BELT THICKENER BUILDING (056)
SLUDGE GRINDING EQUIPMENT
056-162-01-0000, 056-162-02-0000

MAINTENANCE TASK	FREQUENCY						
	D	W	M	Q	SA	A	O
SLUDGE GRINDER EQUIPMENT							
• Check for unusual noise, vibration and heating of motor and reducer	O						
• Inspect cutters for damaged teeth					M		
• Inspect cutters, spacers and shafts for tangled rope or other restrictive debris							M
• Inspect alignment and rigidity of grinder shafts					M		
• Inspect shaft and bearing connection					M		
• Inspect all parts of reducer. Replace defective parts if necessary					M		
• Clean motor and reducer with mineral spirits				E			
• See manufacturer's literature for trouble-shooting and disassembly procedures							M
LUBRICATION							
• Lubricate shaft bearings. Use grease compatible with the nylon acetal type bearings, (See manufacturer's literature). Do not over grease		M					
• Lubricate motor bearings in accordance with manufacturer's recommendation. Do not over grease				E			
• Refer to manufacturer's literature for trouble-shooting procedures			M				

BELT THICKENER BUILDING (056)
EFFLUENT WATER BOOSTER PUMPS
056-163-01-0000, 056-163-02-0000

MAINTENANCE TASK	FREQUENCY						
	D	W	M	Q	SA	A	O
EFFLUENT WATER BOOSTER PUMPS							
• Check for unusual noise and excessive vibration	O						
• Check bearing temperature, bearing temperature should not be 120° F above the surrounding temperature	O	M					
• Check mechanical seal for leakage	O						
• Replace mechanical seal if required. Refer to manufacturer's literature for procedure							M
• Clean bearing housing and bearings. Use kerosene or mineral spirits. Repack with clean ball-bearing grease. Check that water slingers are in correct places						M	
• Check for misalignment of coupling and shaft						M	
• Check shaft and shaft sleeve for scoring						M	
• Check coupling for wear						M	
• Refer to manufacturer's literature for trouble-shooting procedures.							M
MOTOR							
• Check for unusual noise, excessive vibration or any other abnormal conditions	O						
• Check operating temperature of motor bearings; bearing temperature should not be 120° F above the surrounding	O	M					
NOTES							
Operators are required to manually check the temperature of motor bearings daily.							
Mechanical Maintenance Personnel are required to check the temperature of motor bearings with a temperature sensing device, as recommended by the motor manufacturer weekly.							
• Check terminal connections, assembly screws, bolts, and nuts for tightness						E	

BELT THICKENER BUILDING (056)
EFFLUENT WATER BOOSTER PUMPS
056-163-01-0000, 056-163-02-0000 (continued)

MAINTENANCE TASK	FREQUENCY						
	D	W	M	Q	SA	A	O
MOTOR (Continued)							
• Examine starter, switch, fuses, and other control		I					
• Test insulation resistance of motor winding. Refer to manufacturer's literature for instruction						E	
• Clean the motor inside and outside. Use dry compressed air for dust and dry dirt and mineral spirits for accumulated sticky dirt and grease		M					
NOTE Do not use gasoline or other inflammable solvents.							
LUBRICATIONS							
• Lubricate pump bearings with ball bearing grease. Do not over-grease				M			
• Lubricate bearings of couplings through grease fittings in accordance with manufacturer's recommended procedure					E		
• Lubricate motor bearings in accordance with manufacturer's recommendation. Do not over-grease							E

FLOATING BIOLOGICAL SOLIDS THICKENER FACILITY (070)
SUMP PUMP
070-008-01-0000 AND 070-008-02-0000

MAINTENANCE TASK	FREQUENCY						
	D	W	M	Q	SA	A	O
LUBRICATION							
• Grease all bearings			M				
• Check couplings for alignment			M				
• Check for proper pumping record			M				

FLOATING BIOLOGICAL SOLIDS THICKENER FACILITY (070)
COLLECTOR DRIVE
070-030-01-0000 THROUGH 070-030-03-0000

MAINTENANCE TASK	FREQUENCY						
	D	W	M	Q	SA	A	O
MAINTENANCE			M				
• Check all bearings			M				
• Check oil levels			M				
• Check drive chain for looseness			M				
• Grease all bearings							

FLOATING BIOLOGICAL SOLIDS THICKENER FACILITY (070)
CHAINS AND FLIGHTS
070-037-01-0000 THROUGH 070-037-03-0000

MAINTENANCE TASK	FREQUENCY						
	D	W	M	Q	SA	A	O
MAINTENANCE							
• Spray chains and rail assembly with lightweight oil		M					
• Take notice of chain slack		M					

FLOATING BIOLOGICAL SOLIDS THICKENER FACILITY (070)
SKIMMER TANK MECHANISM
070-161-01-0000 THROUGH 070-161-03-0000

MAINTENANCE TASK	FREQUENCY						
	D	W	M	Q	SA	A	O
LUBRICATION							
• Grease all bearings			M				
• Check oil levels in gear boxes			M				
• Check V belts for looseness			M				
• Check drive chains			M				
• Check oil flight chains			M				

FLOATING BIOLOGICAL SOLIDS THICKENER FACILITY (070)
MOTOR CONTROL CENTER NO. 43
070-190-02-0000

MAINTENANCE TASK	FREQUENCY						
	D	W	M	Q	SA	A	O
MAINTENANCE							
• Test all electrical "cans"						E	
• Tighten loose connectors						E	
• Take photographs of units showing signs of "hot spots"						E	

FLOATING BIOLOGICAL SOLIDS THICKENER FACILITY (070)
R.T.U. NO. 14
070-201-01-0000

MAINTENANCE TASK	FREQUENCY						
	D	W	M	Q	SA	A	O
MAINTENANCE							
• Observe unit running			M				
• Check door seal			M				
• Test battery back up system					E		
• Check battery voltage, amperage					E		
• Check to see if program is lost					E		
• Replace battery if needed					E		
• Change primary and canister filters, record date on inside cover of unit					M		
• Check door gasket					M		

Howard F. Curren

Advanced Wastewater Treatment Plant

OPERATION AND MAINTENANCE MANUAL

◆

VOLUME 4

◆

CITY OF TAMPA

GREELEY AND HANSEN
ENGINEERS

LIST OF FIGURES

CHAPTER	FIGURES	DESCRIPTION
II		GENERAL
	II-1	SITE PLAN
	II-2A	PLANT FLOW DIAGRAM (WEST SIDE)
	II-2B	PLANT FLOW DIAGRAM (EAST SIDE)
	II-3	HYDRAULIC PROFILE - SERIES MODE
III		PRIMARY FACILITIES
	III-PR-JC1-1	JUNCTION CHAMBER AND METER VAULT NO. 1 FLOW DIAGRAM
	III-PR-JC1-2	JUNCTION CHAMBER NO. 1 SECTION
	III-PR-JC1-3	SCUM TRANSFER PUMP DISCHARGE CURVES
	III-PR-JC1-4	SEWAGE SAMPLING DIAGRAM
	III-PR-JC1-5	ODOR CONTROL AIR FLOW DIAGRAM
	III-PR-JC1-6	ODOR CONTROL COMPRESSED AIR AND CHEMICAL SYSTEM DIAGRAM
	III-PR-JC1-7	TYPICAL SUMP PUMP INSTALLATION
	III-PR-PST-1	SCHEMATIC DIAGRAM OF OUTSIDE PIPING
	III-PR-PST-2	PRIMARY SEDIMENTATION TANKS
	III-PR-MSPS-1	MIXED SLUDGE PUMP STATION FEED PIPING
	III-PR-ADTG-1	GENERALIZED SLUDGE FLOW DIAGRAM
	III-PR-ADTG-2	SLUDGE FLOW DIAGRAM FOR ANAEROBIC DIGESTORS NOS. 1-5
	III-PR-ADTG-3	SLUDGE FLOW DIAGRAM FOR ANAEROBIC DIGESTORS NOS. 6 AND 7
	III-PR-ADTG-4	ANAEROBIC DIGESTER - TYPICAL PLAN
	III-PR-ADTG-5	DIGESTER TYPICAL SECTION
	III-PR-JC3-1	JUNCTION CHAMBER NO. 3 - PLAN
		POWER FACILITIES
	III-PO-RSP-1	RAW SEWAGE PUMPING STATION SCHEMATIC
	III-PO-PG-1	JACKET WATER DIAGRAM - RSPS
	III-PO-PG-2	JACKET WATER DIAGRAM
	III-PO-PG-3	OUTDOOR SECONDARY SUBSTATION NO. 60 ONE LINE DIAGRAM
III		POWER FACILITIES (cont.)
	III-PO-SPF-1	STANDBY GENERATOR EXTERNAL ENGINE WASTE HEAT COOLING SYSTEM DIAGRAM
	III-PO-SPF-2	STANDBY GENERATOR AIR DIAGRAM
	III-PO-SPF-3	STANDBY GENERATOR FUEL OIL SUPPLY SYSTEM DIAGRAM
	III-PO-SPF-4	STANDBY GENERATOR LUBRICATION OIL SUPPLY SYSTEM DIAGRAM
	III-PO-SPF-5	STANDBY POWER FACILITY PLANT AIR, PLANT WATER, CITY WATER, WASH FOUNTAIN AND SUMP PUMP DIAGRAM
	III-PO-SPF-6	STANDBY POWER FACILITY VENTILATION SYSTEM
	III-PO-SPF-7	13.2kV DISTRIBUTION DIAGRAM
	III-PO-SPF-8	13.2kV INDOOR SWITCHGEAR NO. 3 CONTROL SECTION
		SCREENING AND GRIT REMOVAL
	III-SG-SG1-1	SCREEN AND GRIT BUILDING NO. 1 FLOW DIAGRAM
	III-SG-SG2-2	SCREEN AND GRIT BUILDING NO. 2 FLOW DIAGRAM
	III-SG-SG1-3	SCREEN AND GRIT BUILDING NO. 1 FLOW SEPARATION CURVES
	III-SG-SG1/SG2-4	SCREENING REMOVAL CURVES
	III-SG-SG1/SG2-5	SCREEN AND GRIT BUILDING NOS. 1 & 2 GRIT TANKS SURFACE LOADING CURVES
	III-SG-SG1-6	GRIT PUMP DISCHARGE CURVE SCREEN AND GRIT BUILDING NO. 1
	III-SG-SG1-7	GRIT PUMP DISCHARGE CURVE SCREEN AND GRIT BUILDING NO. 2
	III-SG-SG1/SG2-8	CYCLONE GRIT SEPARATOR OPERATING CURVE
	III-SG-SG1/SG2-9	SCREEN AND GRIT BUILDING NO. 1 & 2 CYCLONE GRIT SEPARATOR

LIST OF FIGURES (cont.)

CHAPTER	FIGURES	DESCRIPTION
III		OXYGEN BIOLOGICAL SYSTEM
	III-OB-MPS-1	MAIN PUMPING STATION LOWER FLOOR SCHEMATIC PLAN
	III-OB-MPS-2	MAIN PUMPING STATION OPERATING FLOOR SCHEMATIC PLAN
	III-OB-MPS-3	MAIN PUMPING STATION CROSS SECTION
	III-OB-MPS-4	MAIN SEWAGE PUMPS MP-MSP-2 AND 5 (CONSTANT SPEED) DISCHARGE CURVES
	III-OB-MPS-5	MAIN SEWAGE PUMPS MP-MSP-1,6 AND 7 (VARIABLE SPEED) DISCHARGE CURVES
	III-OB-MPS-6	MAIN SEWAGE PUMPS MP-MSP-3 AND 4 (VARIABLE SPEED) DISCHARGE CURVES
	III-OB-MPS-7	SCUM TRANSFER PUMP DISCHARGE CURVES
	III-OB-MPS-8	DEWATERING PUMP DISCHARGE CURVES
	III-OB-MPS-9	PLANT AIR COMPRESSOR DIAGRAM
	III-OB-MPS-10	PLANT AIR COMPRESSOR DIAGRAM
	III-OB-MPS-11	SEWAGE SAMPLING DIAGRAM
	III-OB-MPS-12	STANDBY GENERATOR LUBRICATION OIL DIAGRAM
	III-OB-OR-1	HPO REACTORS FLOW DIAGRAM
	III-OB-OR-2	HPO ACTIVATED SLUDGE FACILITIES MODES OF OPERATION
	III-OB-OR-3	HPO REACTOR CROSS SECTION
	III-OB-OR-4	RATE CONTROLLERS MRC-6,7,8,9,10,11, & 12 DIAGRAM
	III-OB-OR-5	HPO REACTORS OXYGEN PURITY CONTROL DIAGRAM
	III-OB-OR-6	RATE CONTROLLER MRC-5 DIAGRAM
	III-OB-JC2-1	JUNCTION CHAMBER AND METER VAULT NO. 2 FLOW DIAGRAM
	III-OB-JC2-2	RATE CONTROLLERS MRC-1, MRC-2 AND MRC-4 DIAGRAM
	III-OB-IPS-1	INTERMEDIATE PUMPING STATION - PLAN AND SECTION
	III-OB-IPS-2	CONSTANT SPEED INTERMEDIATE SEWAGE PUMP DISCHARGE CURVES
	III-OB-IPS-3	VARIABLE SPEED INTERMEDIATE SEWAGE PUMP DISCHARGE CURVES
	III-OB-IPS-4	INTERMEDIATE PUMPING STATION - SEWAGE SAMPLING DIAGRAM

CHAPTER	FIGURES	DESCRIPTION
III		DIFFUSED AIR BIOLOGICAL SYSTEM
	III-DA-DAR-1	DIFFUSED AIR REACTORS
	III-DA-DAR-2	DIFFUSED AIR REACTORS - SECTION
	III-DA-NPS-1	JUNCTION CHAMBER NO. 5
	III-DA-NPS-2	NITRIFICATION PUMPING STATION
	III-DA-NPS-3	NITRIFICATION PUMPING STATION - SECTION
	III-DA-BB-1	BLOWER BUILDING
		FINAL SEDIMENTATION TANKS
	III-FS-FST-1	FINAL SEDIMENTATION TANKS FLOW DIAGRAM TANKS 1 THROUGH 6
	III-FS-FST-2	FINAL SEDIMENTATION TANKS FLOW DIAGRAM TANKS 7 THROUGH 12
	III-FS-FST-3	FINAL SEDIMENTATION TANKS 1-12 SECTIONS
	III-FS-FST-4	FINAL SEDIMENTATION TANKS FLOW DIAGRAM TANKS 13 THROUGH 16
	III-FS-FST-5	FINAL SEDIMENTATION TANKS FLOW DIAGRAM TANKS 17 THROUGH 20
	III-FS-FST-6	FINAL SEDIMENTATION TANKS 13-20 SECTIONS
	III-FS-SPS-1	RETURN SLUDGE PUMPING STATION NO. 1 FLOW DIAGRAM
	III-FS-SPS-2	RETURN SLUDGE PUMPING STATION NO. 2 FLOW DIAGRAM
	III-FS-SPS-3	RETURN SLUDGE PUMPING STATION NO. 3 FLOW DIAGRAM
	III-FS-SPS-4	RETURN SLUDGE PUMPING STATION NO. 4 FLOW DIAGRAM
	III-FS-SPS-5	RETURN SLUDGE PUMPING STATION NO. 5 FLOW DIAGRAM
	III-FS-SPS-6	RETURN SLUDGE PUMP (RSP) DISCHARGE CURVES SLUDGE PUMPING STATION NO. 1
	III-FS-SPS-7	RETURN SLUDGE PUMP (RSP) DISCHARGE CURVES SLUDGE PUMPING STATION NOS. 2 AND 3

LIST OF FIGURES (cont.)

CHAPTER	FIGURES	DESCRIPTION
III		FINAL SEDIMENTATION TANKS (cont.)
	III-FS-SPS-8	RETURN SLUDGE PUMP (RSP) DISCHARGE CURVES SLUDGE PUMPING STATION NO. 1
	III-FS-SPS-9	RETURN SLUDGE PUMP (RSP) DISCHARGE CURVES SLUDGE PUMPING STATION NOS. 2 AND 3
	III-FS-SPS-10	RETURN SLUDGE PUMP (RSP) DISCHARGE CURVES SLUDGE PUMPING STATION NOS. 1 AND 2
	III-FS-SPS-11	RETURN SLUDGE PUMP (RSP) DISCHARGE CURVES SLUDGE PUMPING STATION NOS. 2 AND 3
	III-FS-SPS-12	RETURN SLUDGE PUMP (RSP) DISCHARGE CURVES SLUDGE PUMPING STATION NOS. 1 AND 2
	III-FS-SPS-13	RETURN SLUDGE PUMP (RSP) DISCHARGE CURVES SLUDGE PUMPING STATION NOS. 1 AND 2
	III-FS-SPS-14	RETURN SLUDGE PUMP (RSP) DISCHARGE CURVES SLUDGE PUMPING STATION NOS. 4 AND 5
	III-FS-SPS-15	RETURN SLUDGE PUMP (RSP) DISCHARGE CURVES SLUDGE PUMPING STATION NOS. 4 AND 5
	III-FS-SPS-16	WASTE SLUDGE PUMPS 1, 2 OR 3 DISCHARGE CURVES
	III-FS-SPS-17	FLOW METERS MS-2 AND MS-3 DIAGRAM
	III-FS-SPS-18	TYPICAL RETURN SLUDGE SAMPLE SINK
	III-FS-SPS-19	RATE CONTROLLERS MRC-13. MRC-14 AND MRC-25 DIAGRAM
	III-FS-SPS-20	FLOATING BIOLOGICAL SOLIDS (FBS) PUMP DISCHARGE CURVES
	III-FS-SPS-21	DEWATERING PUMP DISCHARGE CURVES
	III-FS-ABP-1	ACCESS BUILDING AND PIPE TUNNEL SCHEMATIC
		FILTRATION
	III-FL-FB-1	FILTER BUILDING NO. 1 PIPING DIAGRAM
	III-FL-FB-2	FILTER BUILDING NO. 2, JUNCTION CHAMBER NO. 6 WASTEWATER FLOW DIAGRAM
	III-FL-FB-3	FILTER BUILDING NO. 2 EQUIPMENT SCHEMATIC
	III-FL-FB-4	FLOW METER MS-4, FE-48 (MS10) AND FE-49 (MS-11)
	III-FL-FB-5	FLOW METER MS-5 AND FE-60 DIAGRAM
	III-FL-FB-6	RATE CONTROLLER MRC-18 AND MRC-19 DIAGRAM
	III-FL-FB-7	RATE CONTROLLERS FE-53 (MRC-20) AND FE-54 (MRC-21)

CHAPTER	FIGURES	DESCRIPTION
III		FILTRATION (cont.)
	III-FL-FB-8	EFFLUENT WATER STRAINERS DIAGRAM
	III-FL-FB-9	THICKENING TANKS DILUTION WATER PUMPS DISCHARGE CURVES
	III-FL-FB-10	GENERAL PURPOSE EFFLUENT WATER PUMPS DISCHARGE CURVES
	III-FL-FB-11	CHLORINE SOLUTION WATER PUMPS DISCHARGE CURVES
	III-FL-FB-12	LAWN IRRIGATION WATER PUMPS DISCHARGE CURVES
	III-FL-FB-13	FILTER BUILDING NO. 1 BACKWASH WATER PUMPS DISCHARGE CURVES
	III-FL-FB-14	FILTER BUILDING NO. 2 BACKWASH WATER PUMPS DISCHARGE CURVES
	III-FL-FB-15	POLYMER SYSTEM DIAGRAM
	III-FL-FB-16	CHLORINE SYSTEM DIAGRAM
	III-FL-FB-17	SEWAGE SAMPLING FLOW DIAGRAM
	III-FL-FB-18	PLANT AIR COMPRESSOR DIAGRAM
	III-FL-DF-1	DENITRIFICATION FILTERS AND MISC. FACILITIES FLOW DIAGRAM
	III-FL-DF-2	DENITRIFICATION FILTERS SCHEMATIC
	III-FL-DF-3	DENITRIFICATION FILTER NOS. 21-26 AND 31-36 SCHEMATIC
	III-FL-DF-4	TYPICAL DENITRIFICATION FILTER PLAN AND SECTION
	III-FL-DF-5	TYPICAL DENITRIFICATION FILTER SECTION
	III-FL-DF-6	DENITRIFICATION FILTER NOS. 1-20 BACKWASH AIR SCHEMATIC
	III-FL-DF-7	DENITRIFICATION FILTER NOS. 21-26 AND 31-36 BACKWASH AIR SCHEMATIC
	III-FL-DF-8	DENITRIFICATION FILTER GENERAL INSTRUMENT AND CONTROL DIAGRAM
	III-FL-DF-9	DENITRIFICATION FILTER TYPICAL GROUP OPERATION DIAGRAM
	III-FL-DF-10	DENITRIFICATION FILTER TYPICAL NITROGEN RELEASE CYCLE DIAGRAM
	III-FL-DF-11	DENITRIFICATION FILTER TYPICAL FULL BACKWASH SEQUENCE DIAGRAM

LIST OF FIGURES (cont.)

CHAPTER	FIGURES	DESCRIPTION
III		FILTRATION (cont.)
	III-FL-CHF-1	CHEMICAL SYSTEM DIAGRAM
	III-FL-CHF-2	METHANOL USAGE CURVES
	III-FL-ACT-1	POST AERATION-CHLORINATION TANKS SCHEMATIC
	III-FL-ACT-2	POST AERATION-CHLORINATION TANKS DETENTION TIME CURVES
	III-FL-ACT-3	SAMPLE PUMP PIPIING SCHEMATIC
	III-FL-DCL-1	DECHLORINATION PROCESS PIPING SCHEMATIC
	III-FL-DCL-2	EFFLUENT SAMPLING EQUIPMENT
	III-FL-RWP-1	RECLAIMED WATER PUMPING STATION
		SLUDGE THICKENING
	III-ST-STB-1	SLUDGE TREATMENT FACILITIES SCHEMATIC
	III-ST-STB-2	SLUDGE POLYMER SYSTEM AND PLANT WATER DIAGRAM
	III-ST-STB-3	WASTE ACTIVATED SLUDGE PUMPS
	III-ST-STB-4	SLUDGE THICKENER BUILDING METERING AND CONTROL DIAGRAM
	III-ST-BTB-1	BELT THICKENER BUILDING SLUDGE THICKENER FACILITIES WASTE ACTIVATED SLUDGE SCHEMATIC
	III-ST-BTB-2	BELT THICKENER BUILDING SLUDGE THICKENING FACILITIES METERING AND CONTROL DIAGRAM
	III-ST-BTB-3	BELT THICKENER BUILDING WAS SLUDGE AND THICKENED SLUDGE DISCHARGE DIAGRAM
	III-ST-BTB-4	BELT THICKENER BUILDING POLYMER FEED, EFFLUENT WATER PLANT AIR AND PLANT WATER DIAGRAM
	III-ST-BTB-5	BELT THICKENER BUILDING POLYMER FEED UNIT CONTROL PANEL AND OPERATIONAL SCHEMATIC
	III-ST-FBS-1	SCHEMATIC DIAGRAM OF OUTSIDE PIPING
	III-ST-FBS-2	FBS THICKENER FACILITY

CHAPTER	FIGURES	DESCRIPTION
III		SLUDGE DEWATERING
	III-SD-SCB-1	CONTROL BUILDING AND SLUDGE STORAGE TANKS SCHEMATIC
	III-SD-SCB-2	SLUDGE STORAGE TANK CROSS SECTION
	III-SD-SCB-3	POLYMER SYSTEM DIAGRAM
	III-SD-SDR-1	SLUDGE DRYING BEDS - INFLUENT SCHEMATIC
	III-SD-SDR-2	SLUDGE DRYING BEDS - UNDERDRAIN SCHEMATIC
	III-SD-SDR-3	SLUDGE DRYING BEDS - DRIED SLUDGE CONVEYING
	III-SD-SDR-4	SLUDGE GRINDER STATION PLANS AND ELEVATIONS AND SLUDGE TRIP-OFF DETAILS
	III-SD-SDB-1	SLUDGE DEWATERING BUILDING SLUDGE FEED DIAGRAM
	III-SD-SDB-2	SLUDGE DEWATERING BUILDING WEST LIQUID POLYMER DIAGRAM
	III-SD-SDB-3	SLUDGE DEWATERING BUILDING EAST LIQUID POLYMER DIAGRAM
	III-SD-SDB-4	SLUDGE DEWATERING BUILDING POLYMER TRANSFER DIAGRAM
	III-SD-SDB-5	SLUDGE DEWATERING BUILDING WEST PLANT WATER DIAGRAM
	III-SD-SDB-6	SLUDGE DEWATERING BUILDING EFFLUENT WATER DIAGRAM
	III-SD-SDB-7	SLUDGE DEWATERING BUILDING PLANT AIR DIAGRAM
	III-SD-SDB-8	SLUDGE DEWATERING BUILDING CONVEYOR DIAGRAM
	III-SD-SDB-9	SLUDGE DEWATERING BUILDING VENTILATION DIAGRAM
	III-SD-SDB-10	SLUDGE DEWATERING BUILDING VENTILATION DIAGRAM
	III-SD-HDF-1	SLUDGE PELLETIZING PROCESS SYSTEM FLOW/MATERIAL BALANCE 14% SOLIDS FEED SLUDGE
	III-SD-HDF-2	SLUDGE PELLETIZING PROCESS SYSTEM FLOW/MATERIAL BALANCE 18% SOLIDS FEED SLUDGE
	III-SD-HDF-3	SLUDGE PELLETIZING PROCESS SYSTEM FLOW/MATERIAL BALANCE 22% SOLIDS FEED SLUDGE

LIST OF FIGURES (cont.)

CHAPTER	FIGURES	DESCRIPTION
III		SLUDGE DEWATERING (cont.)
	III-SD-HDF-4	SLUDGE PELLETIZING PROCESS SYSTEM FLOW AIR/FUEL PROCESS
	III-SD-HDF-5	CHART RECORDERS
	III-SD-HDF-6	DRUM BURNER CONTROL PANEL
	III-SD-HDF-7	SECTIONAL VIEW OF ROTARY DRYER
	III-SD-HDF-8	AIR POLLUTION CONTROL PROCESS AFTERBURNER
	III-SD-HDF-9	SLUDGE PELLETIZING PROCESS AFTERBURNER
	III-SD-HDF-10	SLUDGE PELLETIZING PROCESS AFTERBURNER
	III-SD-HDF-11	SLUDGE PELLETIZING PROCESS AFTERBURNER
	III-SD-HDF-12	SLUDGE PELLETIZING PROCESS AFTERBURNER
	III-SD-HDF-13	SLUDGE PELLETIZING PROCESS AFTERBURNER
	III-SD-HDF-14	AFTERBURNER CONTROL PANEL
	III-SD-FPS-1	FILTRATE PUMPING STATION AND BACKFLOW STRUCTURE FLOW DIAGRAM
	III-SD-FPS-2	FILTRATE PUMPING STATION AND SET POINT ELEVATIONS
		OVERFLOW STRUCTURE
	III-OS-1	OVERFLOW STRUCTURE SCHEMATIC
		ADMINISTRATION
	III-AD-OMB-1	MAINTENANCE BUILDING PLAN AT GRADE LEVEL AND SERVICE TUNNEL
	III-AD-OMB-2	MAINTENANCE BUILDING PLAN AT MEZZANINE LEVEL
	III-AD-AB-1	ADMINISTRATION BUILDING FLOOR PLAN
	III-AD-AB-2	ADMINISTRATION BUILDING AIR FLOW AND CONTROL DIAGRAM
	III-AD-AB-3	ADMINISTRATION BUILDING CHILLED WATER FLOW AND CONTROL DIAGRAM
	III-AD-AB-4	ADMINISTRATION BUILDING HEATING HOT WATER FLOW AND CONTROL DIAGRAM

CHAPTER	FIGURES	DESCRIPTION
III		SITE UTILITY SYSTEMS
	III-SU-UPS-1	PLANT AIR DIAGRAM
	III-SU-UPS-2	PLANT AIR DIAGRAM
	III-SU-UPS-3	PLANT AIR DIAGRAM
	III-SU-UPS-4	PLANT AND CITY WATER DIAGRAM
	III-SU-UPS-5	GENERAL PURPOSE EFFLUENT WATER WEST SECTION
	III-SU-UPS-6	GENERAL PURPOSE EFFLUENT WATER NORTH SECTION
	III-SU-UPS-7	GENERAL PURPOSE EFFLUENT WATER SOUTH SECTION
	III-SU-UPS-8	GENERAL PURPOSE EFFLUENT WATER NORTHEAST SECTION
	III-SU-UPS-9	GENERAL PURPOSE EFFLUENT WATER SOUTHEAST SECTION
	III-SU-UPS-10	PROCESS AIR DIAGRAM - NORTH SECTION
	III-SU-UPS-11	PROCESS AIR DIAGRAM - SOUTH SECTION

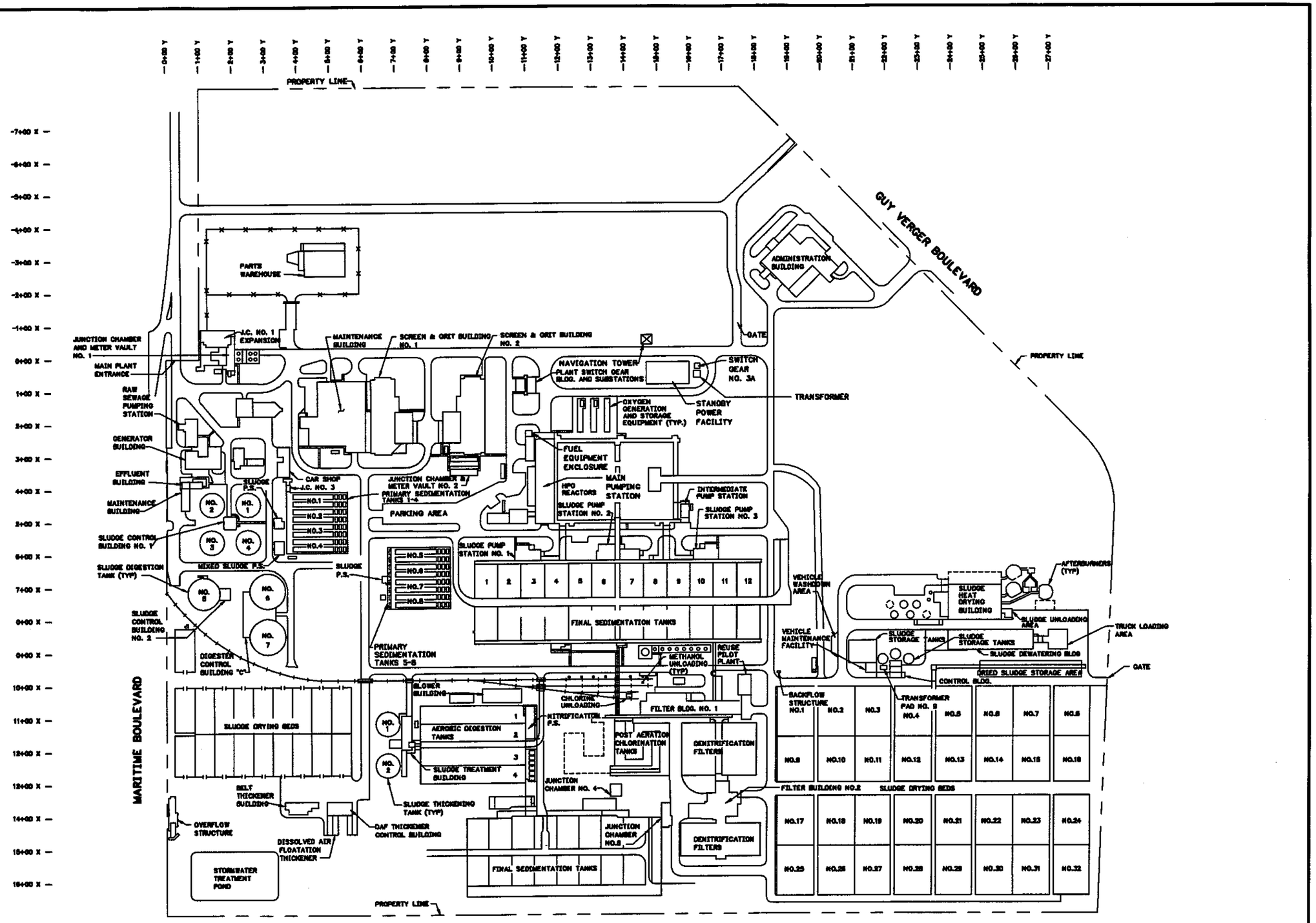

GREELEY AND HANSEN
ENGINEERS

FIGURE II-1
SITE PLAN

FILE: II-1 1:1 07/12/99 10:04 GH-E

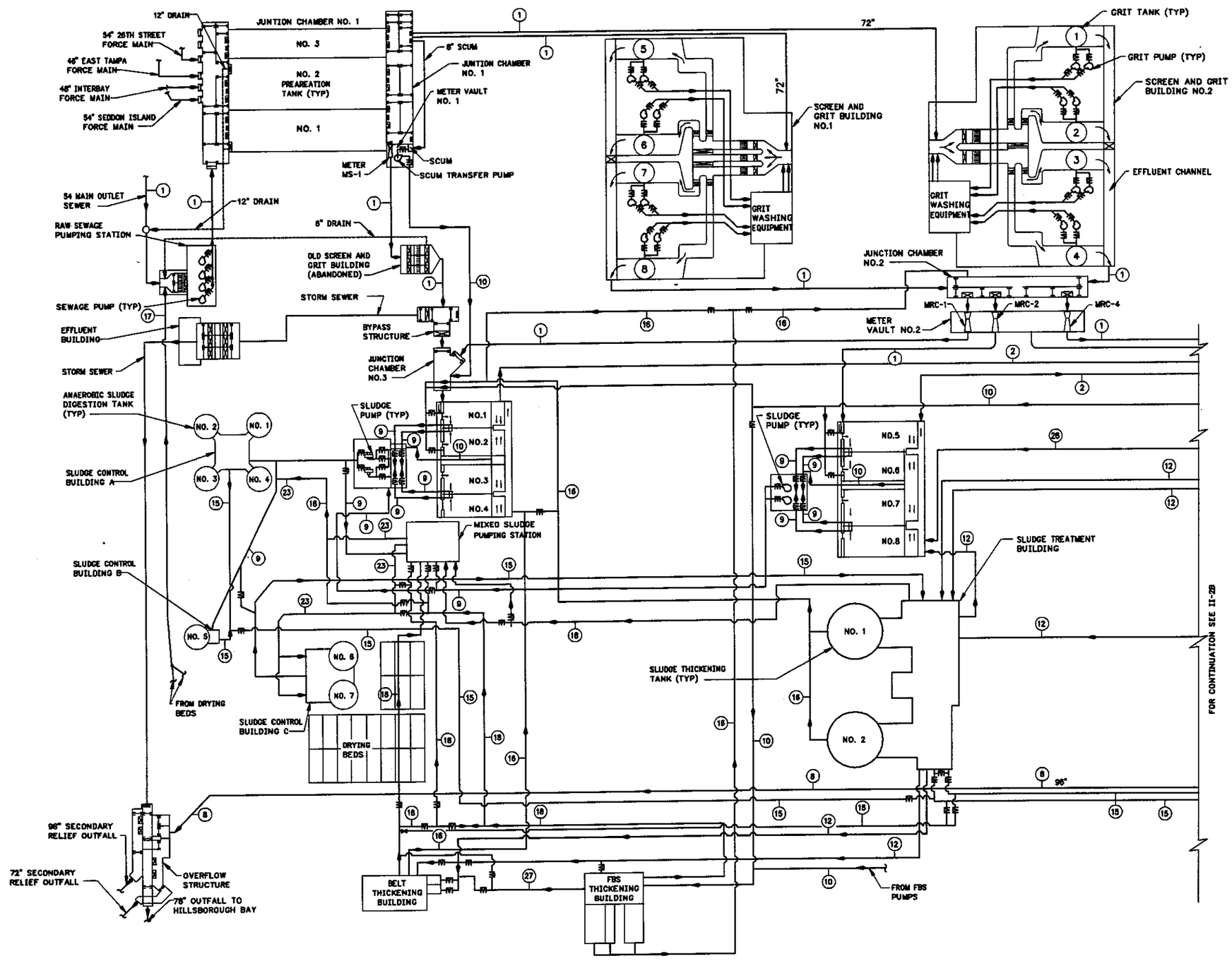

LEGEND

1. RAW SEWAGE
2. PRIMARY TANK EFFLUENT
3. CARBONACEOUS REACTORS EFFLUENT
4. CARBONACEOUS FINAL SEDIMENTATION TANKS EFFLUENT (SECONDARY EFFLUENT)
5. NITRIFICATION REACTORS EFFLUENT
6. NITRIFICATION FINAL SEDIMENTATION TANKS EFFL.
7. DENITRIFICATION FILTERS EFFLUENT
8. PLANT EFFLUENT
9. PRIMARY SLUDGE
10. SCUM OR FBS
11. RETURN SLUDGE
12. WASTE SLUDGE
13. GRIT PUMP DISCHARGE
14. GRIT WASHING EQUIPMENT EFFLUENT
15. DIGESTED SLUDGE
16. THICKENING OVERFLOW OR DRAINAGE
17. DRYING BED UNDERFLOW
18. THICKENED SLUDGE
19. MIXED LIQUOR
20. FILTERS BACKWASH WATER
21. FILTERS BACKWASH WATER DRAIN
22. CHLORINATED EFFLUENT WATER
23. MIXED SLUDGE
24. MAIN DRAIN
25. DENITRIFICATION FILTER INFLUENT
26. DEWATERING
27. THICKENED FBS

FIGURE II-2A
PLANT FLOW DIAGRAM (WEST SIDE)

GREELEY AND HANSEN ENGINEERS

FILE: II-2A 1:1 02/24/99 08:37 GH-E

FIGURE II-2A
PLANT FLOW DIAGRAM
(WEST SIDE)

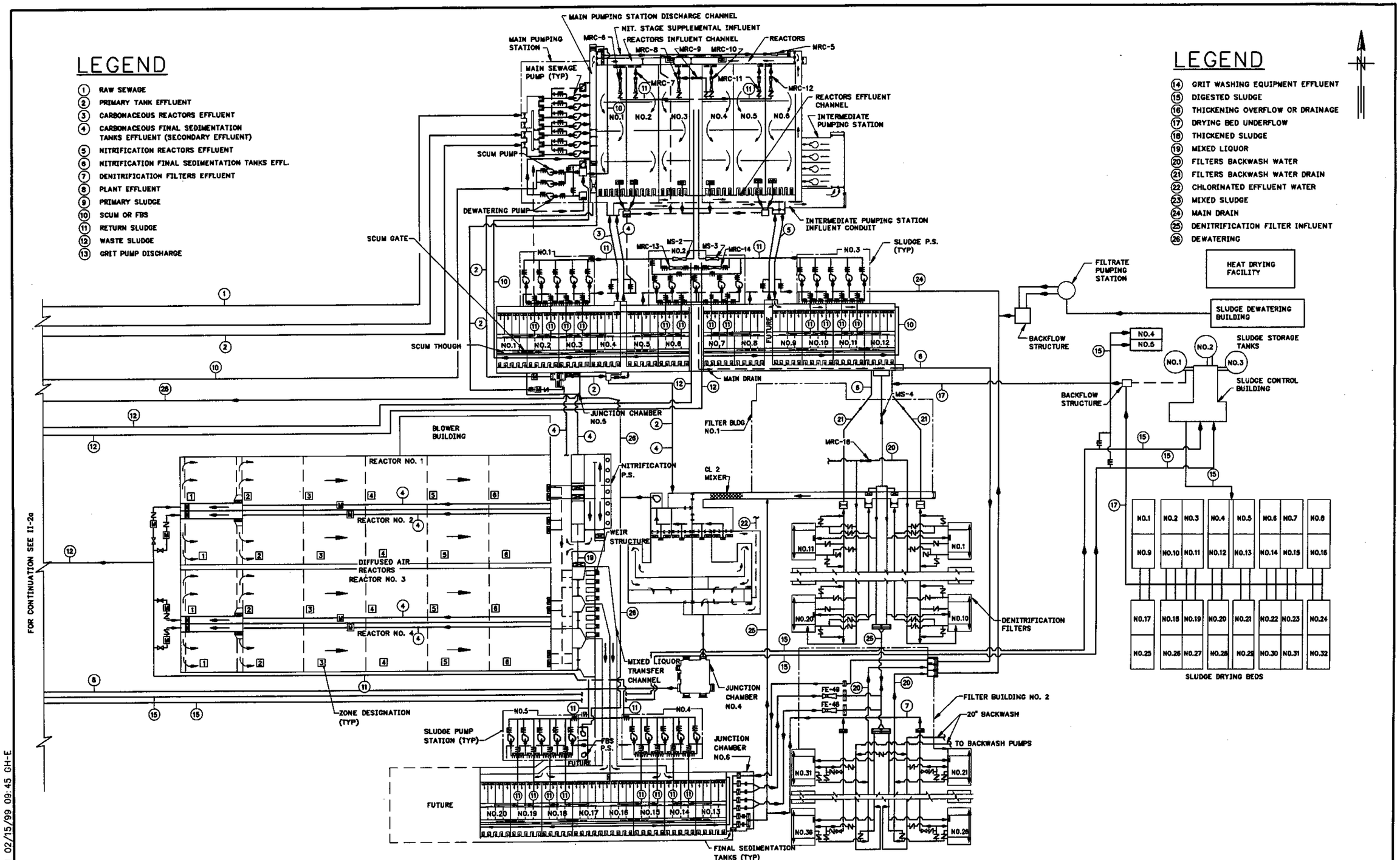

FIGURE II-2B
PLANT FLOW DIAGRAM (EAST SIDE)

GREELEY AND HANSEN
ENGINEERS

FIGURE II-2B
PLANT FLOW DIAGRAM
(EAST SIDE)

FILE: II-2B 1:1 02/15/99 09:45 GH-E

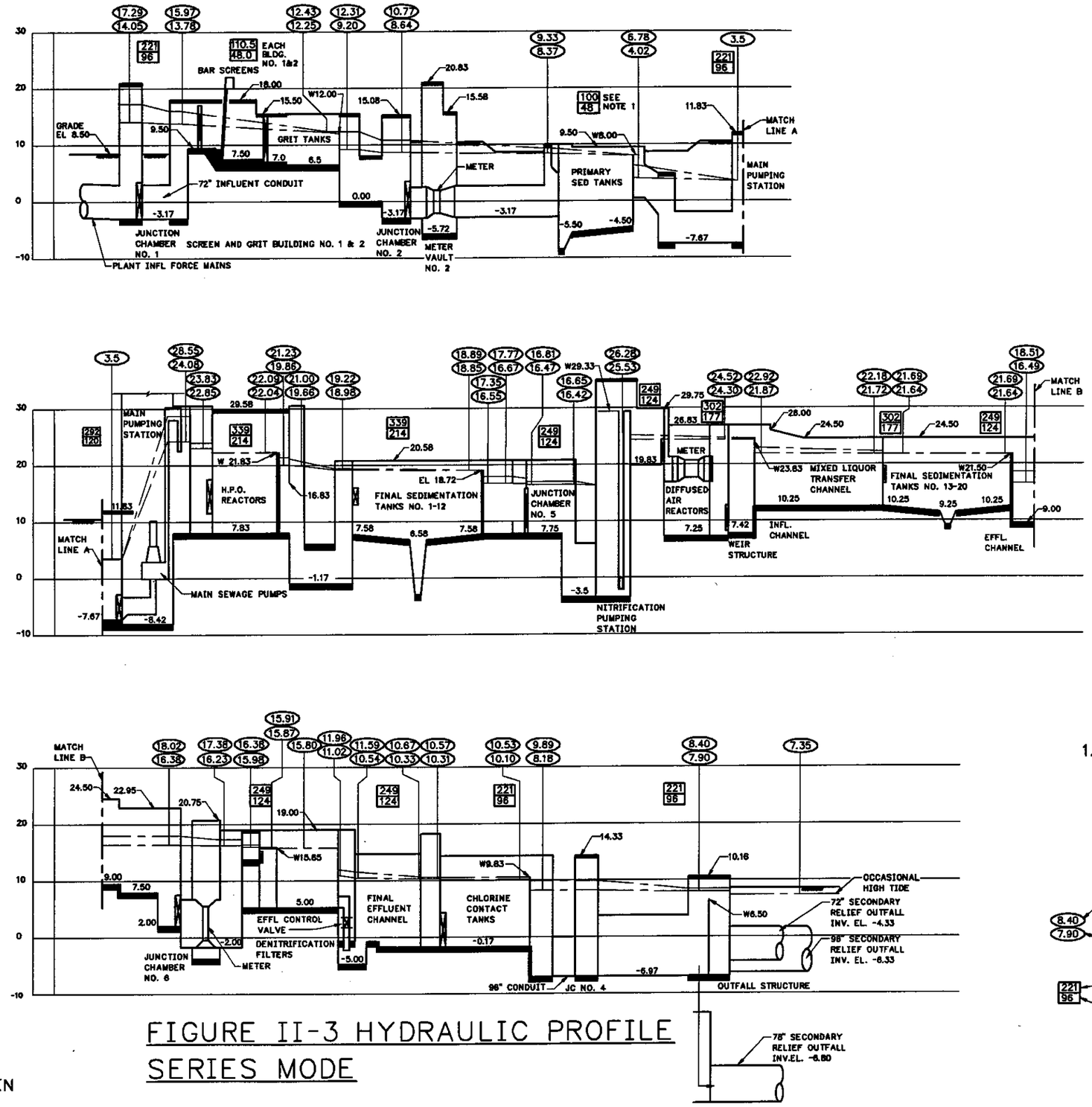

FIGURE II-3 HYDRAULIC PROFILE SERIES MODE

NOTES:

1. FLOW TO EACH EAST AND WEST SIDE AT PEAK FLOW, 21 MGD MUST BYPASS PRIMARIES AND GO DIRECTLY TO THE MAIN P.S.

LEGEND

- (8.40) HYDRAULIC GRADE LINE AT PEAK FLOW
- (7.90) HYDRAULIC GRADE LINE AT AVERAGE FLOW
- [221] PEAK FLOW
- [96] ANNUAL AVERAGE FLOW

GREELEY AND HANSEN ENGINEERS

FIGURE II-3
HYDRAULIC PROFILE - SERIES MODE

FILE: II-3 1:1 02/24/99 08:51 GH-E

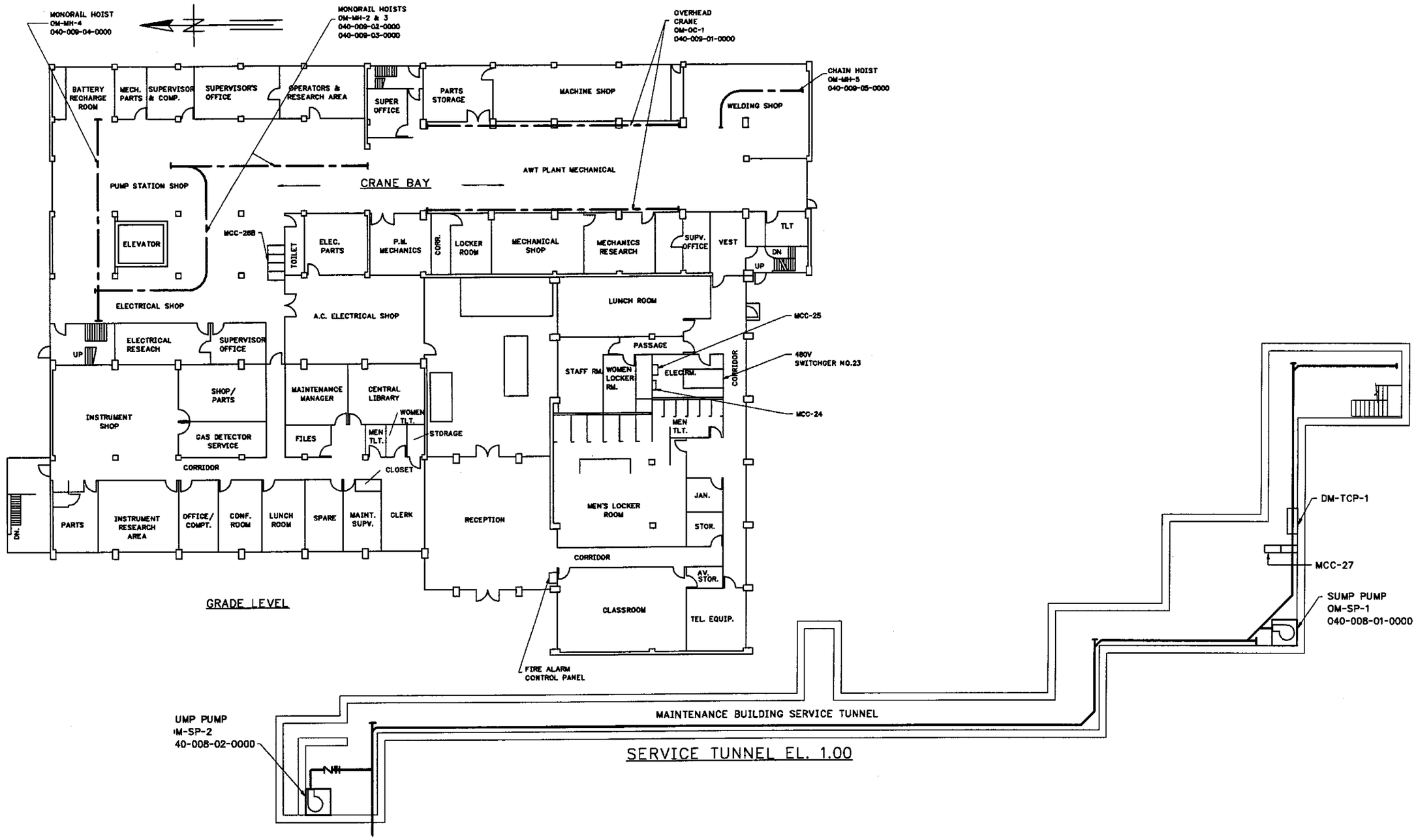

FIGURE III-AD-OMB-1 MAINTENANCE BUILDING PLAN AT GRADE LEVEL AND SERVICE TUNNEL

FILE: AD-OMB-1 1:1 03/01/99 15:50 GH-E

GREELEY AND HANSEN
ENGINEERS

FIGURE III-AD-OMB-1
MAINTENANCE BUILDING PLAN
AT GRADE LEVEL AND
SERVICE TUNNEL

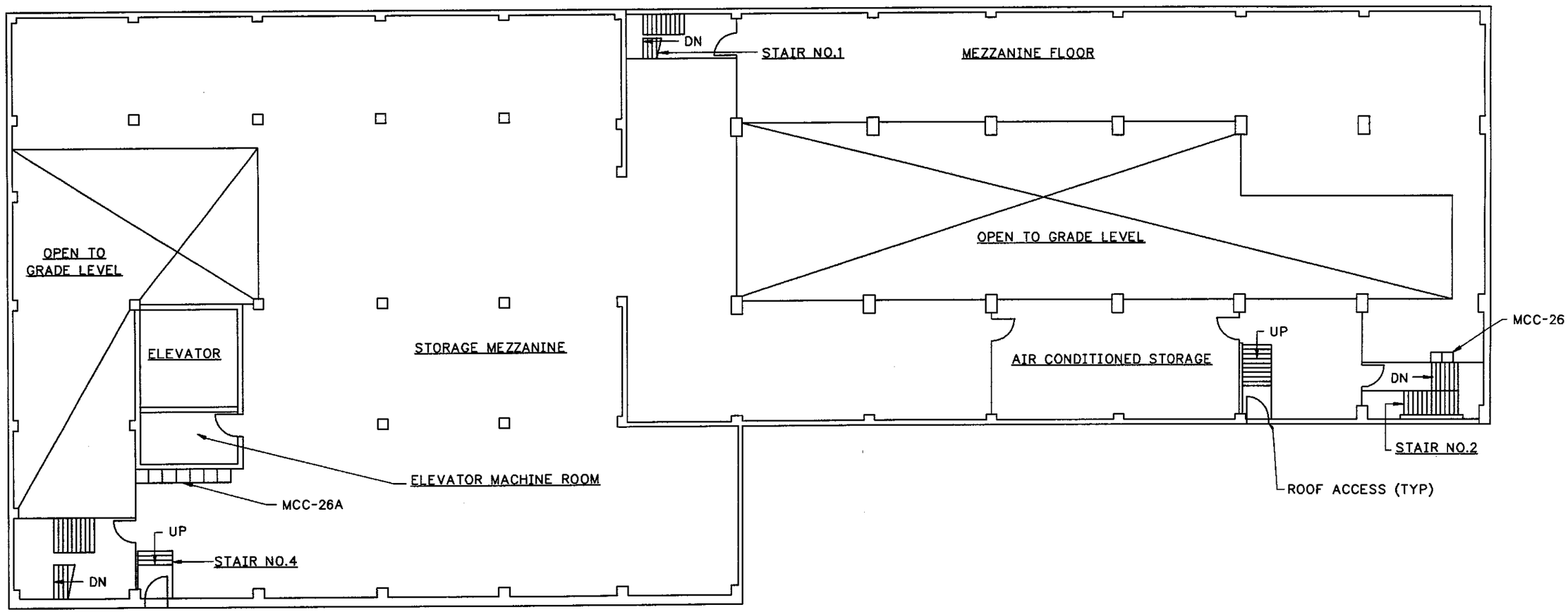

FIGURE III-AD-OMB-2 MAINTENANCE BUILDING PLAN AT MEZZANINE LEVEL

FILE: AD-OMB-2 1:1 03/02/99 08:35 GH-E

GREELEY AND HANSEN
ENGINEERS

FIGURE III-AD-OMB-2
MAINTENANCE BUILDING PLAN
AT MEZZANINE LEVEL

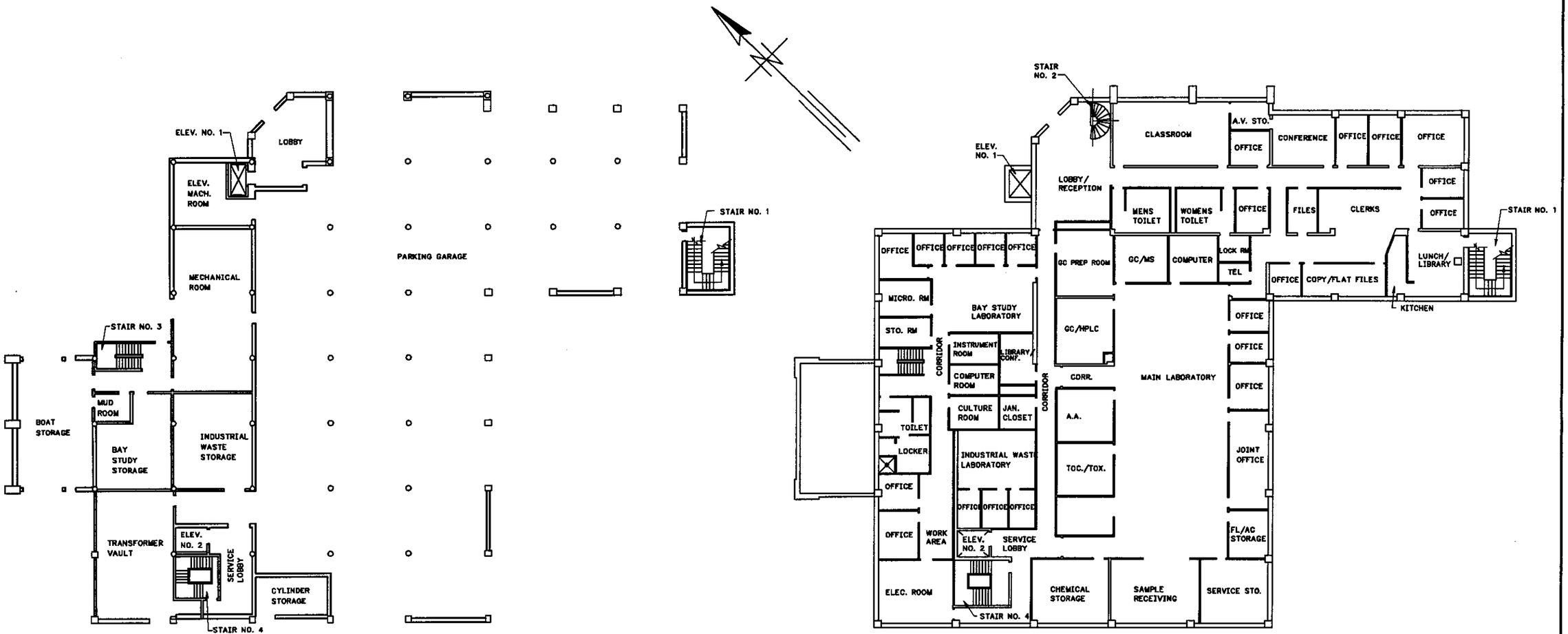

GROUND FLOOR PLAN

MAIN FLOOR PLAN
(SECOND FLOOR)

FIGURE III-AD-AB-1 ADMINISTRATION BUILDING FLOOR PLAN

FILE: AD-AB-1 1:1 03/02/99 08:42 GH-E

GREELEY AND HANSEN
ENGINEERS

FIGURE III-AD-AB-1
ADMINISTRATION BUILDING
FLOOR PLANS

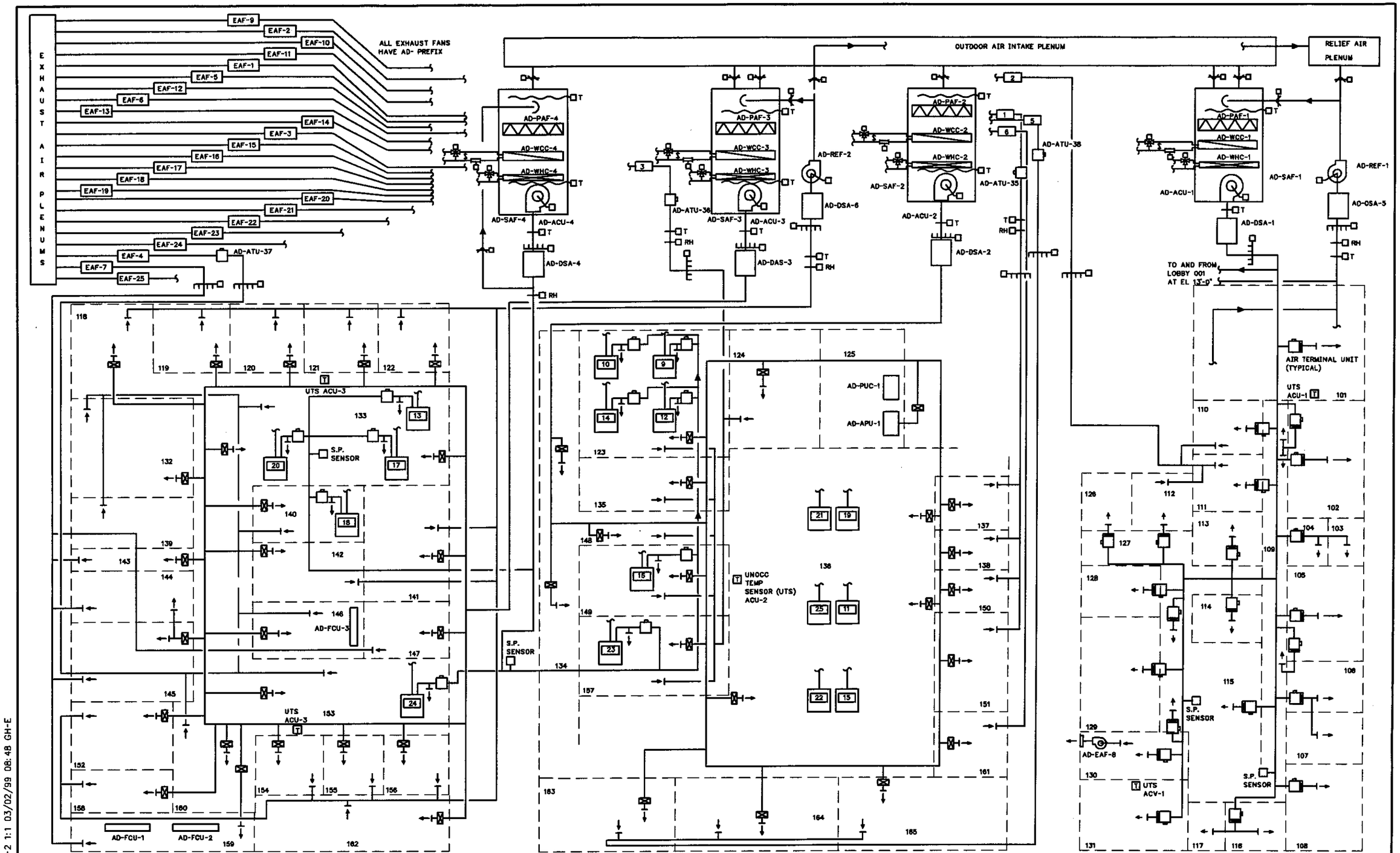

GREELEY AND HANSEN ENGINEERS

FIGURE III-AD-AB-2 AIR FLOW AND CONTROL DIAGRAM

FIGURE III-AD-AB-2
ADMINISTRATION BUILDING
AIR FLOW AND CONTROL DIAGRAM

FILE: AD-AB-2 1:1 03/02/99 08:48 GH-E

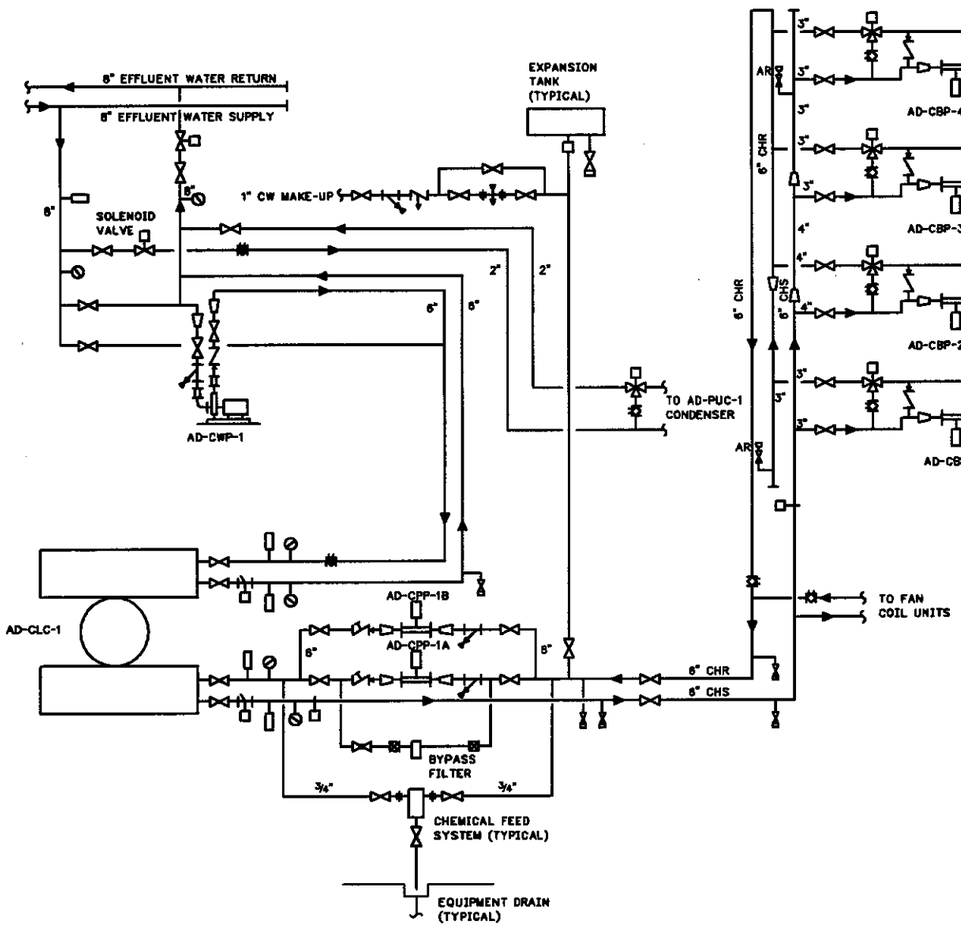

FIGURE III-AD-AB-3 CHILLED WATER FLOW AND CONTROL DIAGRAM

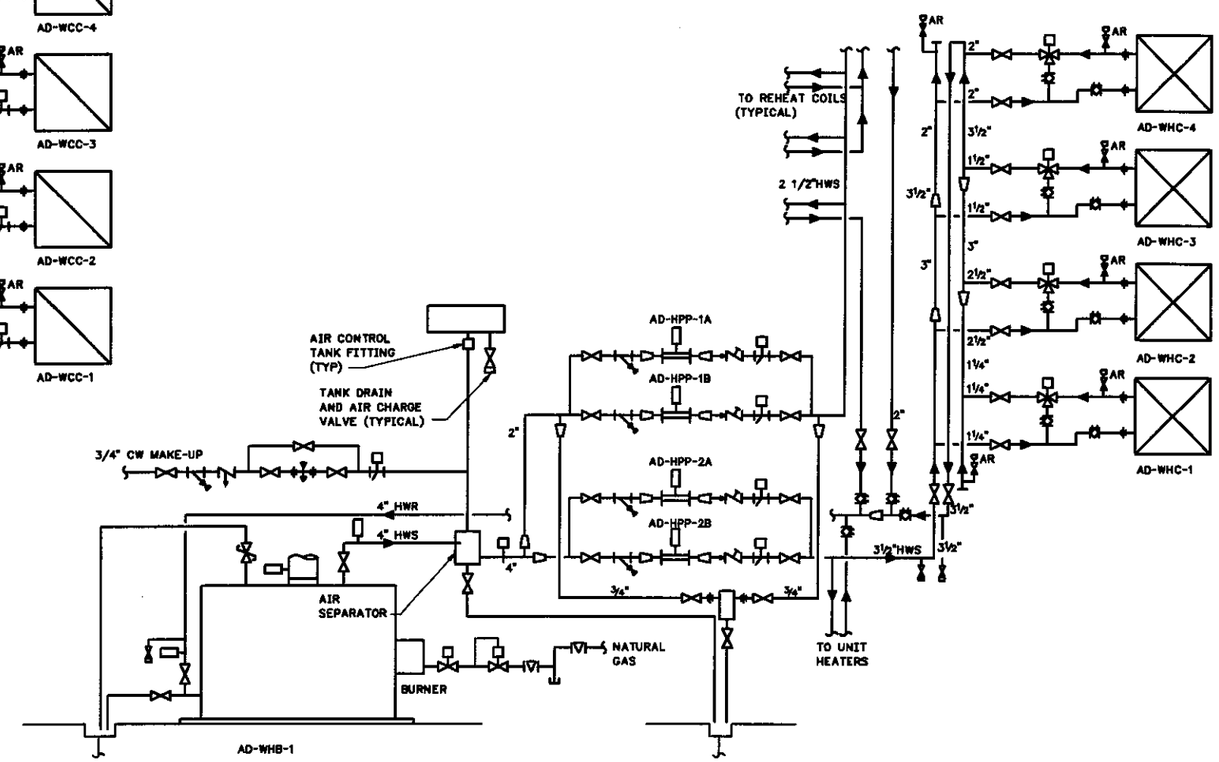

FIGURE III-AD-AB-4 HEATING HOT WATER FLOW AND CONTROL DIAGRAM

FILE: AD-AB-4 1:1 03/02/99 08:53 GH-E

GREELEY AND HANSEN
ENGINEERS

FIGURE III-AD-AB-3
CHILLED WATER FLOW AND
CONTROL DIAGRAM
FIGURE III-AD-AB-4
HEATING HOT WATER FLOW
AND CONTROL DIAGRAM

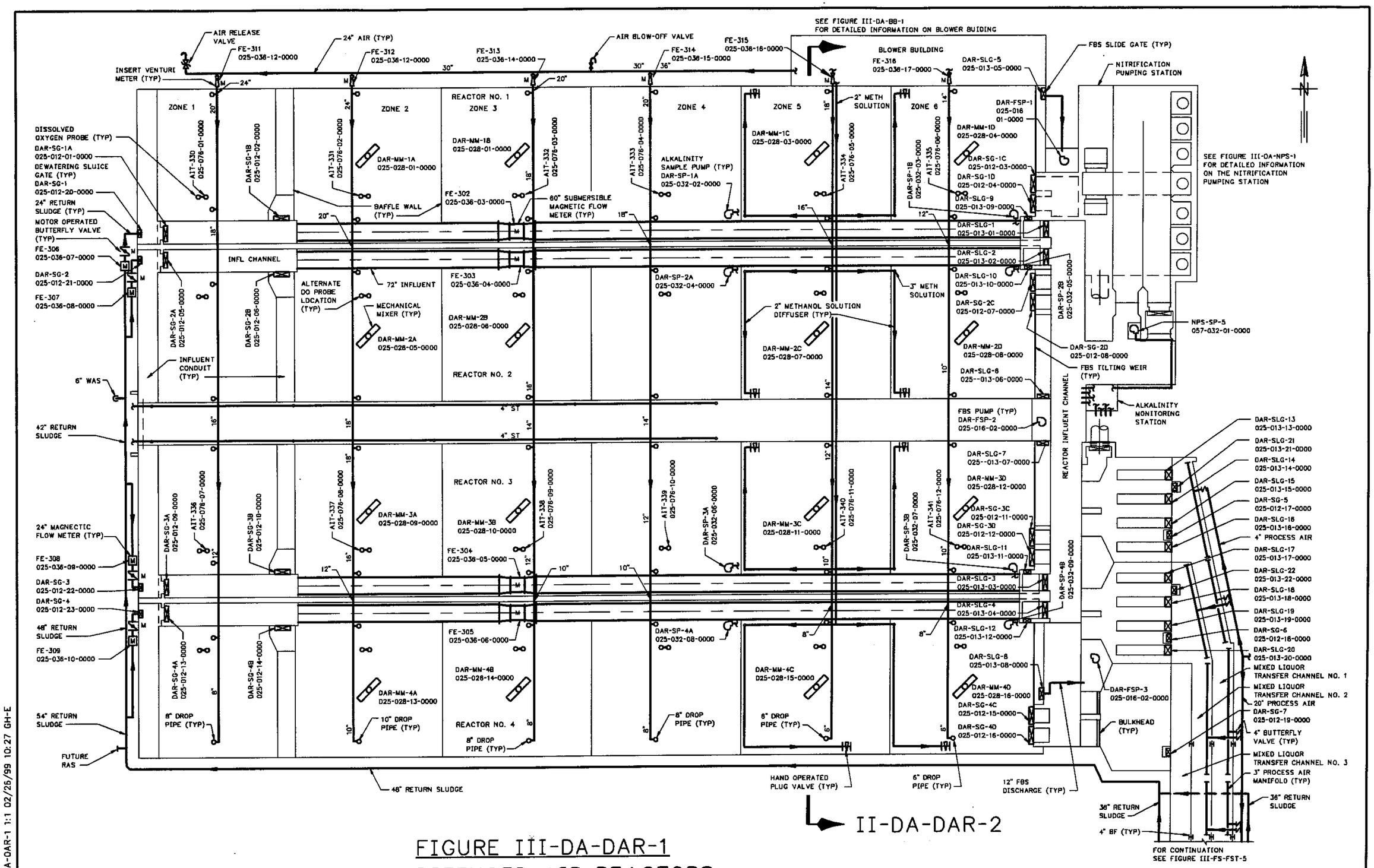

FIGURE III-DA-DAR-1
DIFFUSED AIR REACTORS

GREELEY AND HANSEN ENGINEERS

FILE: DA-DAR-1 1:1 02/26/99 10:27 GH-E

FIGURE III-DA-DAR-1
DIFFUSED AIR REACTORS

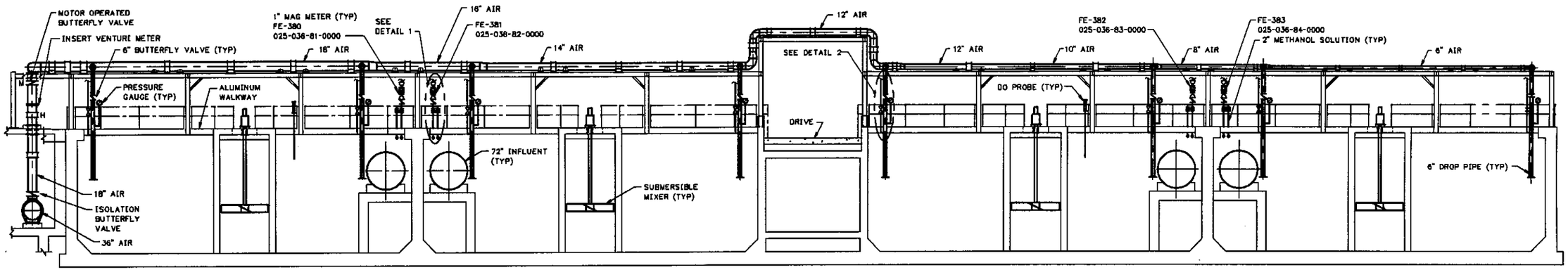

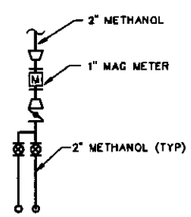

DETAIL1

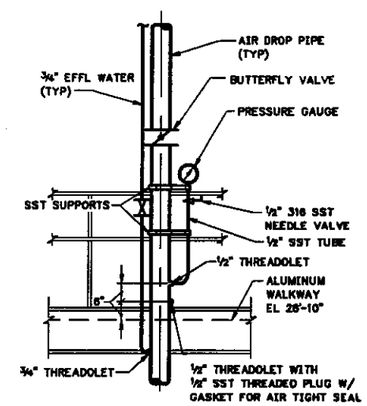

DETAIL2

FIGURE III-DA-DAR-2
DIFFUSED AIR REACTORS - SECTION

FILE: DA-DAR-2 1:1 02/26/99 10:43 GH+E

GREELEY AND HANSEN
ENGINEERS

FIGURE III-DA-DAR-2
DIFFUSED AIR REACTORS
SECTION

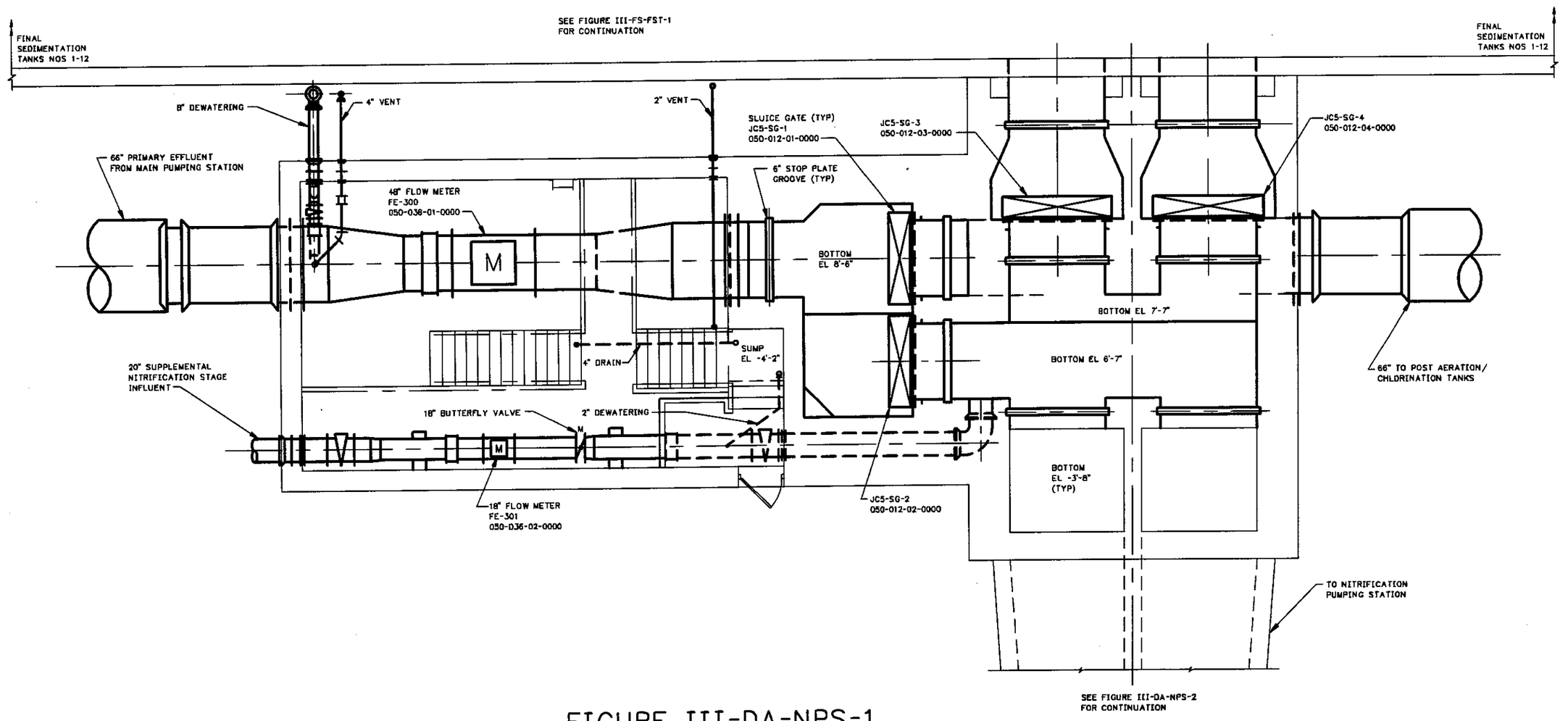

FIGURE III-DA-NPS-1
JUNCTION CHAMBER NO.5

FILE: DA-NPS-1 1:1 02/26/99 10:50 GH-E

GREELEY AND HANSEN
ENGINEERS

FIGURE III-DA-NPS-1
JUNCTION CHAMBER NO. 5

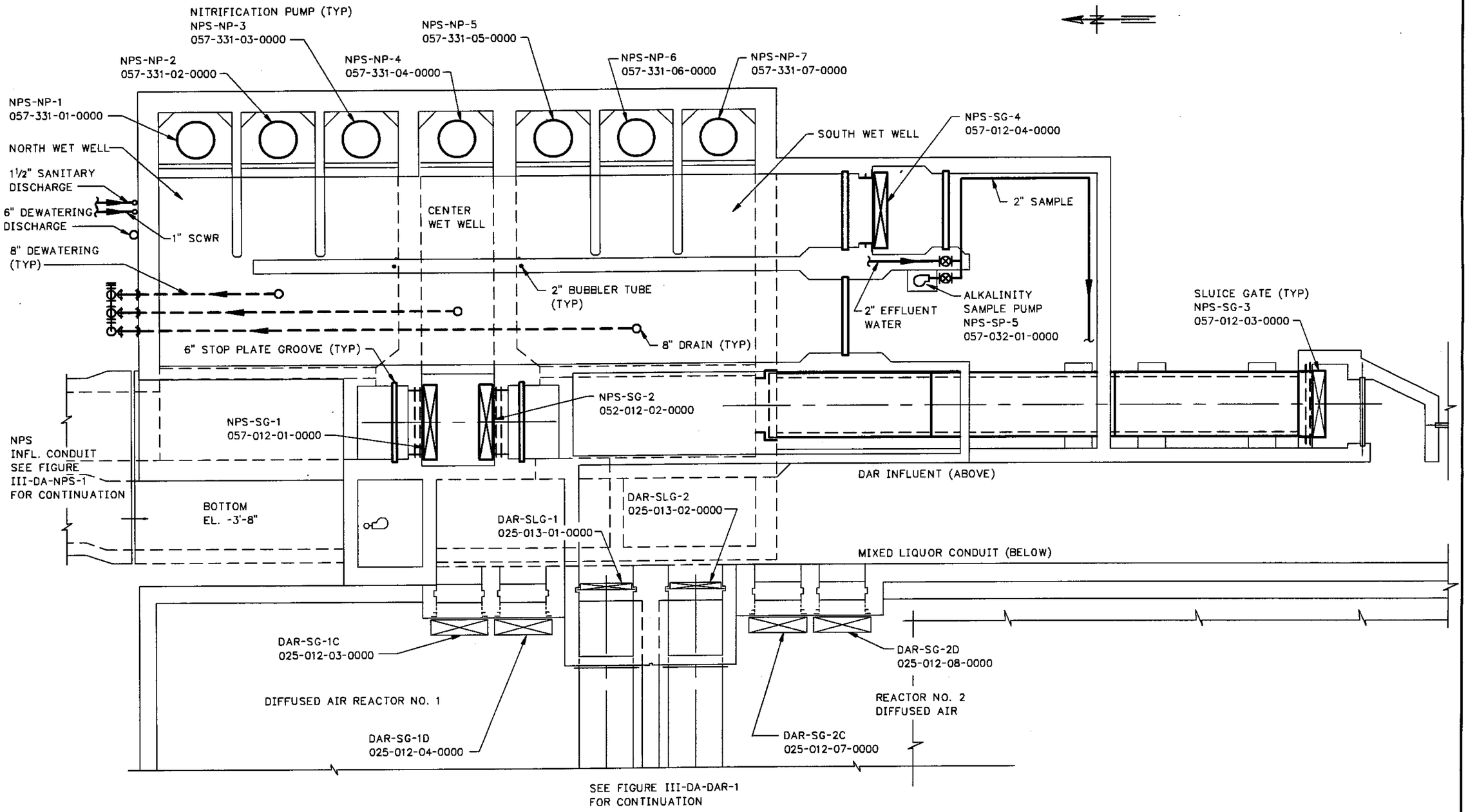

FIGURE III-DA-NPS-2
NITRIFICATION PUMPING STATION

GREELEY AND HANSEN
ENGINEERS

FIGURE III-DA-NPS-2
NITRIFICATION PUMPING STATION

FILE: DA-NPS-2 1:1 02/26/99 11:03 GH-E

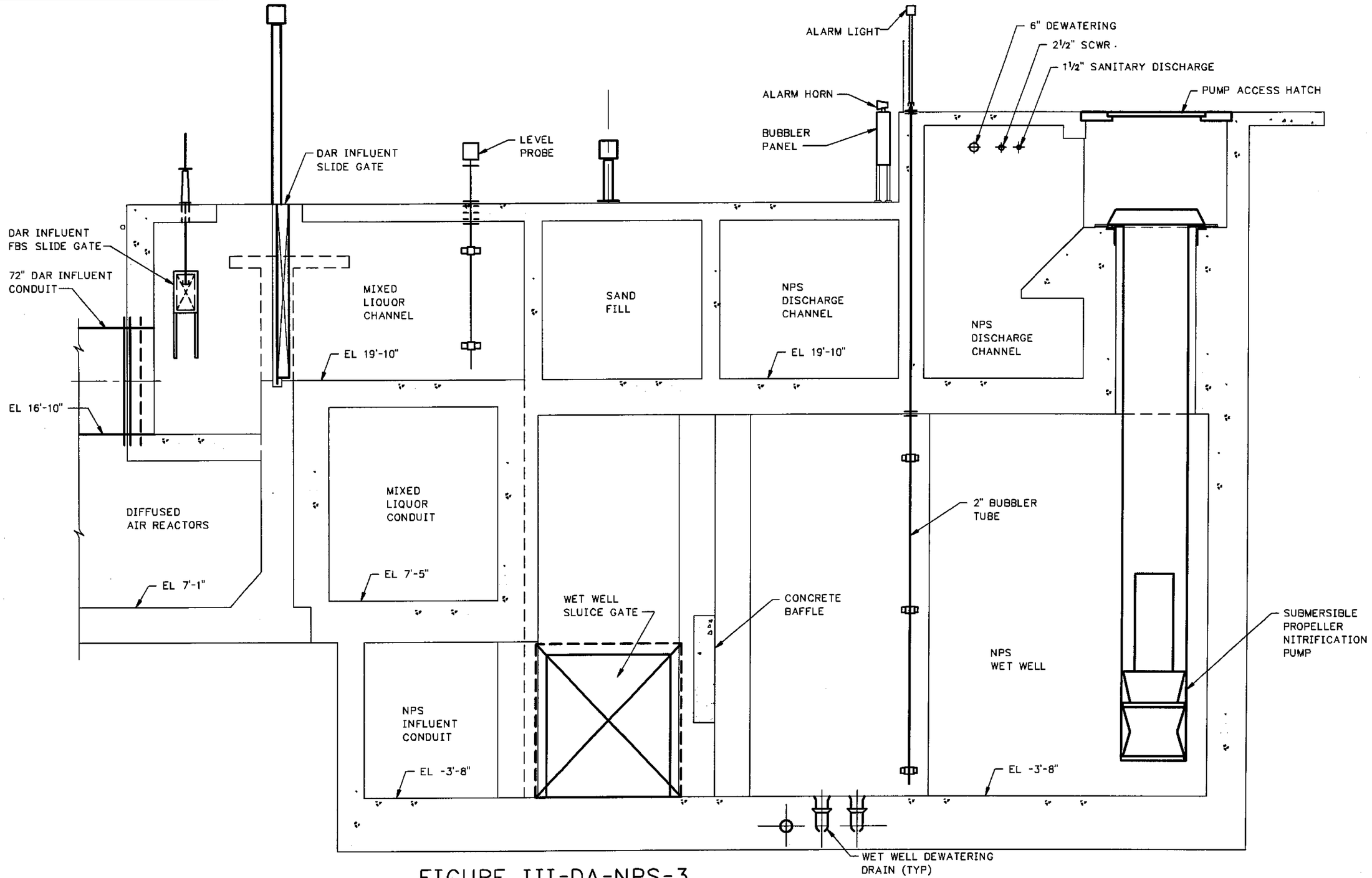

FIGURE III-DA-NPS-3
NITRIFICATION PUMPING STATION SECTION

GREELEY AND HANSEN
ENGINEERS

FILE: DA-NPS-3 1:1 02/26/99 11:03 GH-E

FIGURE III-DA-NPS-3
NITRIFICATION PUMPING STATION
SECTION

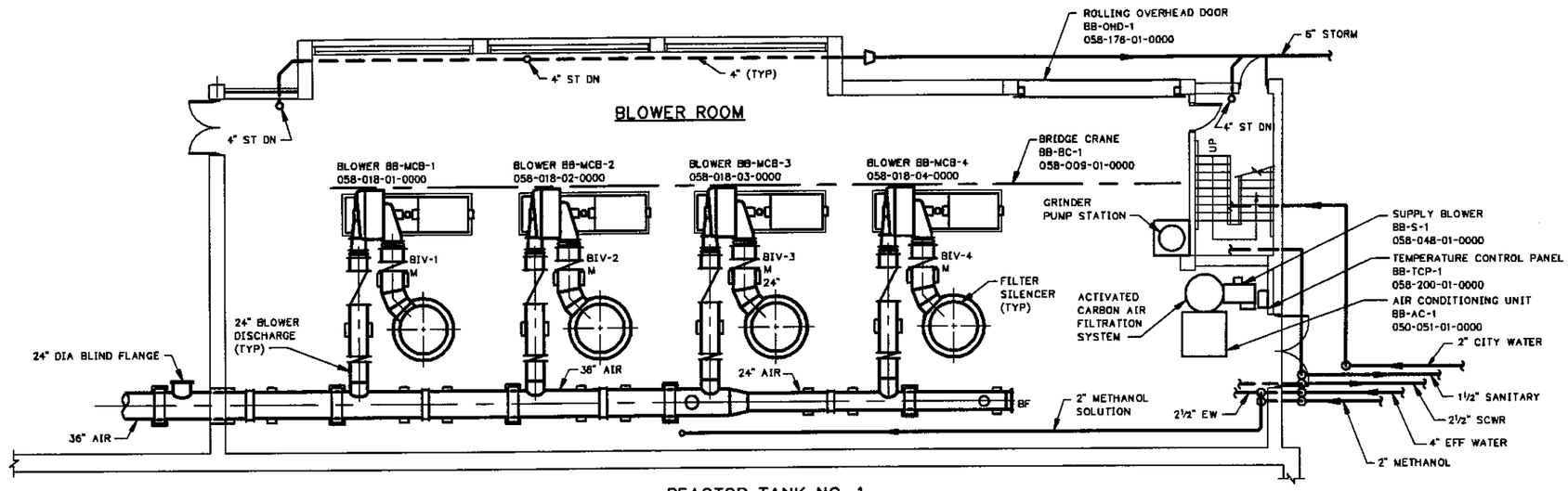

REACTOR TANK NO. 1

PLAN AT EL 11'-2"

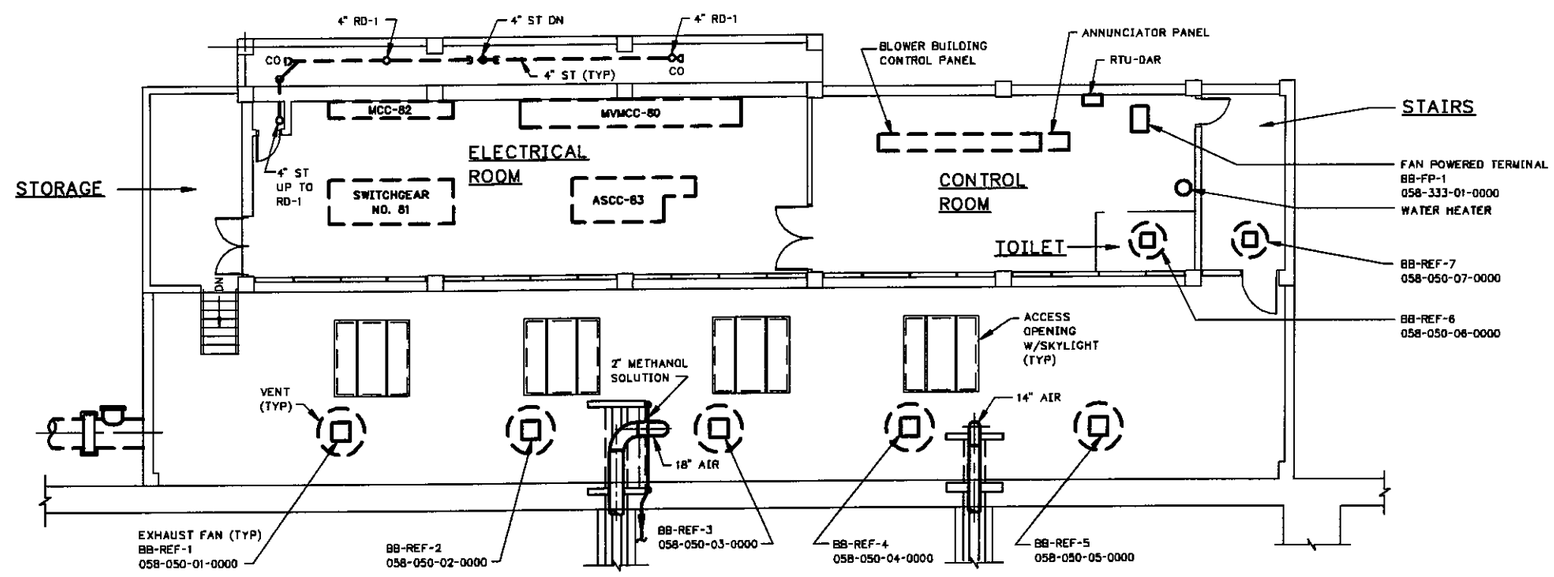

PLAN AT EL 32'-4"

FIGURE III-DA-BB-1
BLOWER BUILDING

FILE: DA-BB-1 1:1 02/26/99 10:46 GH-E

GREELEY AND HANSEN
ENGINEERS

FIGURE III-DA-BB-1
BLOWER BUILDING

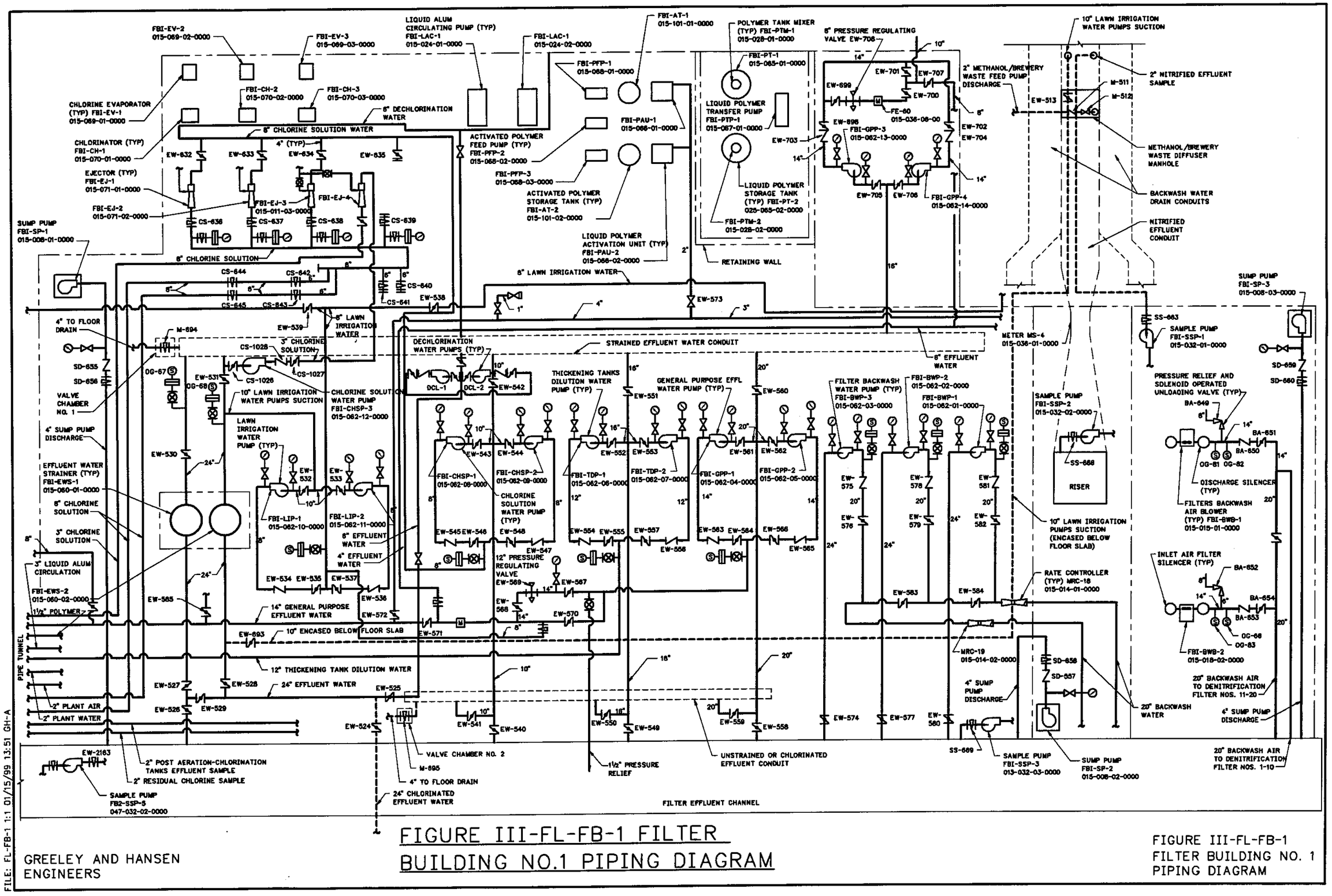

GREELEY AND HANSEN
ENGINEERS

FIGURE III-FL-FB-1 FILTER
BUILDING NO.1 PIPING DIAGRAM

FIGURE III-FL-FB-1
FILTER BUILDING NO. 1
PIPING DIAGRAM

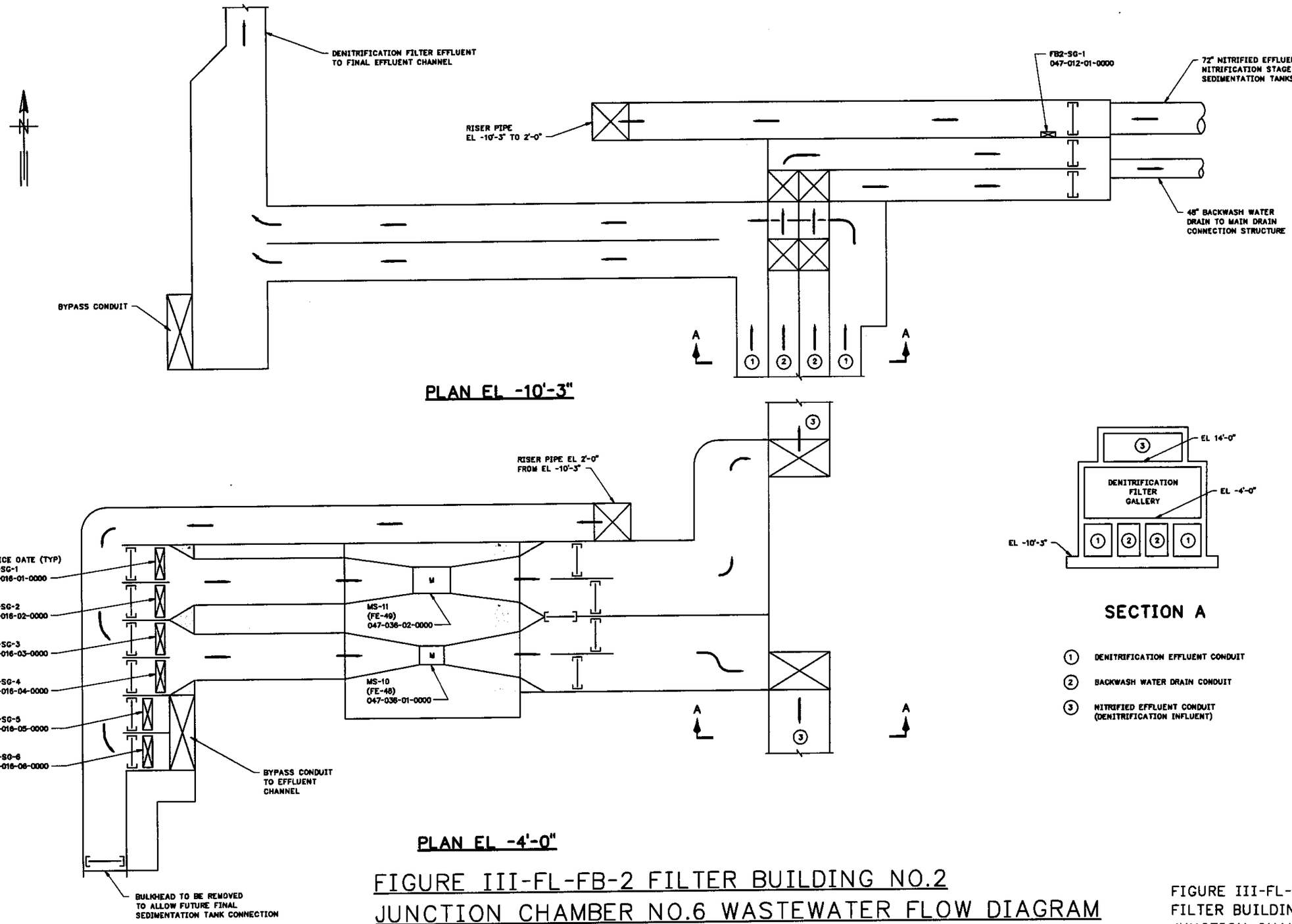

FIGURE III-FL-FB-2 FILTER BUILDING NO.2
JUNCTION CHAMBER NO.6 WASTEWATER FLOW DIAGRAM

FIGURE III-FL-FB-2
FILTER BUILDING NO. 2
JUNCTION CHAMBER NO. 6
WASTEWATER FLOW DIAGRAM

GREELEY AND HANSEN
ENGINEERS

FILE: FL-FB-2 1:1 03/04/99 10:06 GH-E

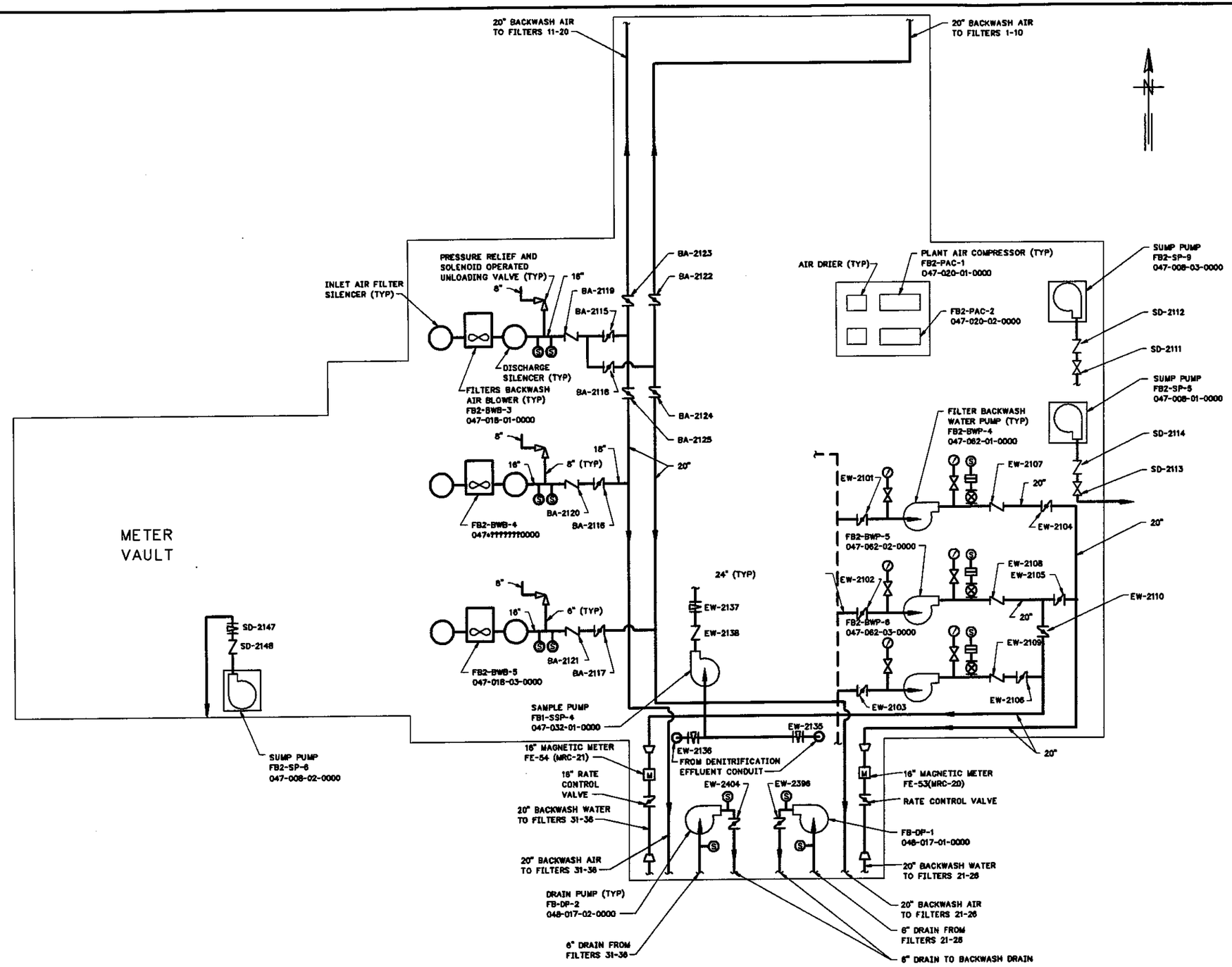

FIGURE III-FL-FB-3
FILTER BUILDING NO.2 EQUIPMENT SCHEMATIC

GREELEY AND HANSEN
ENGINEERS

FILE: FL-FB-3 1:1 03/04/99 10:09 GH-E

FIGURE III-FL-FB-3
FILTER BUILDING NO. 2
EQUIPMENT SCHEMATIC

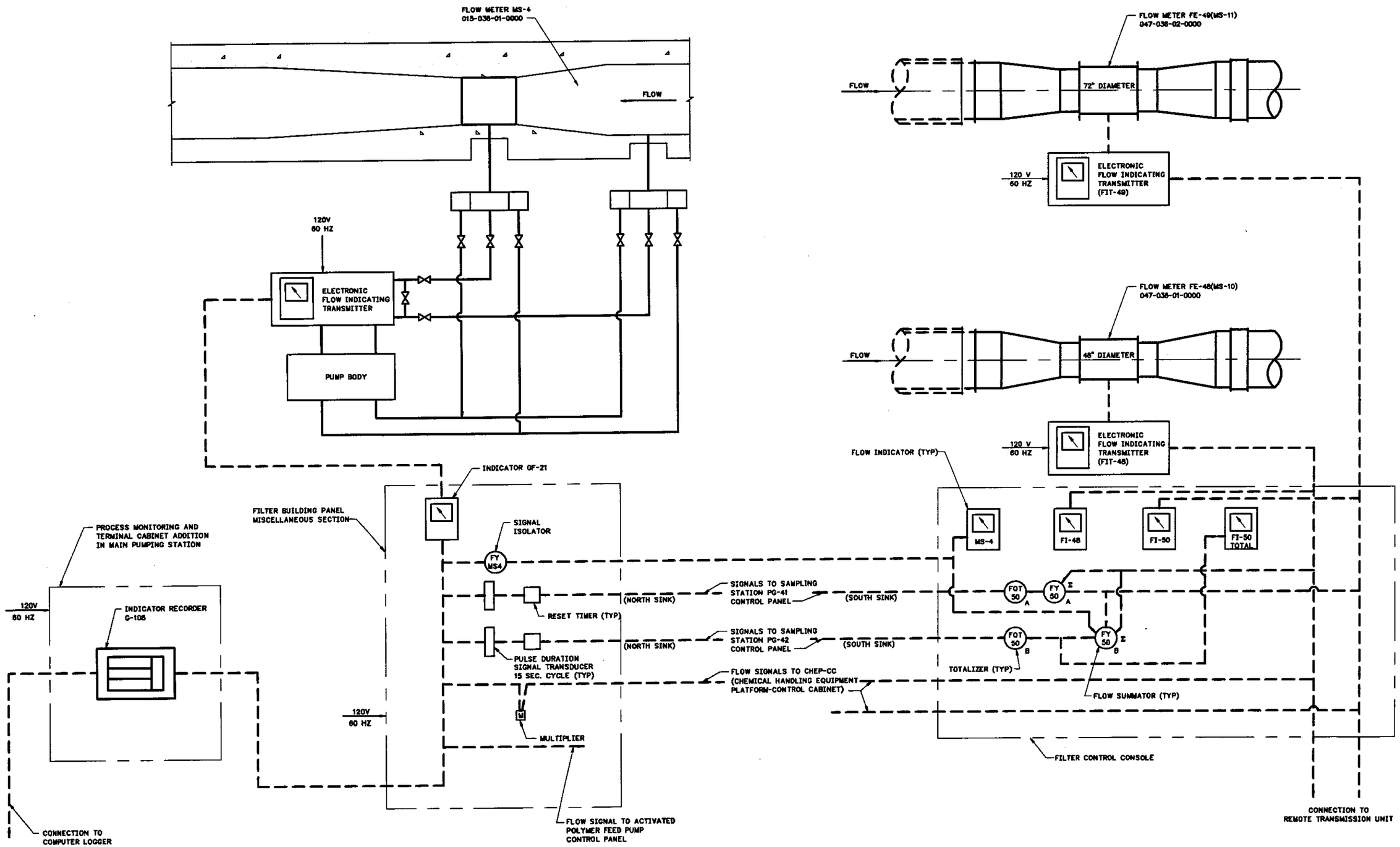

FIGURE III-FL-FB-4 FLOW METER MS-4
FE-48(MS10) AND FE-49(MS-11)

GREELEY AND HANSEN
ENGINEERS

FIGURE III-FL-FB-4
FLOW METERS MS-4,
FE-48(MS-10) AND FE-49(MS-11)

FILE: FL-FB-4 1:1 03/04/99 10:11 GH-E

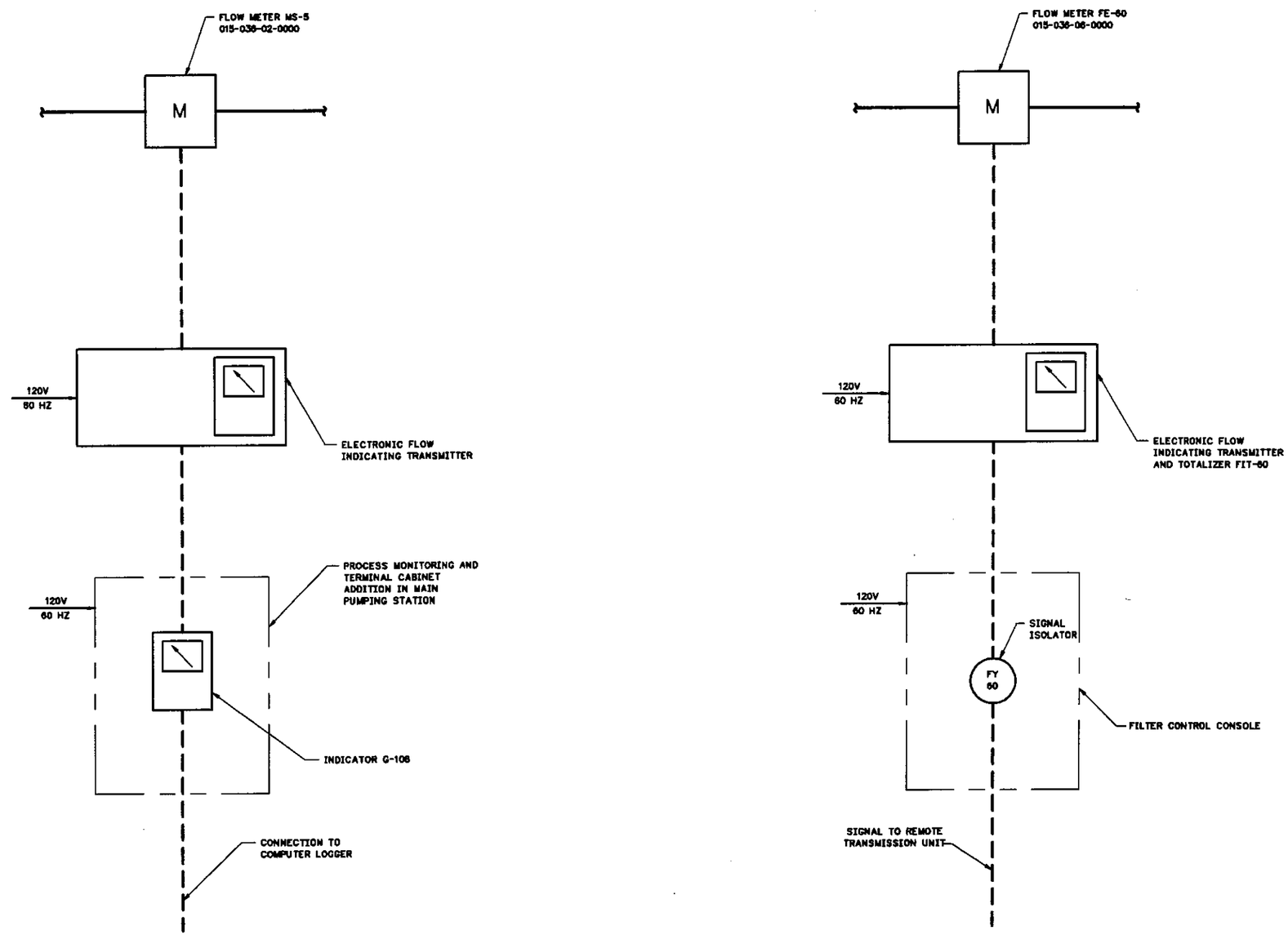

FIGURE III-FL-FB-5 FLOW METER
MS-5 AND FE-60 DIAGRAM

GREELEY AND HANSEN
ENGINEERS

FIGURE III-FL-FB-5
FLOW METER MS-5 AND FE-60
DIAGRAM

FILE: FL-FB-5 1:1 03/04/99 10:13 GH-E

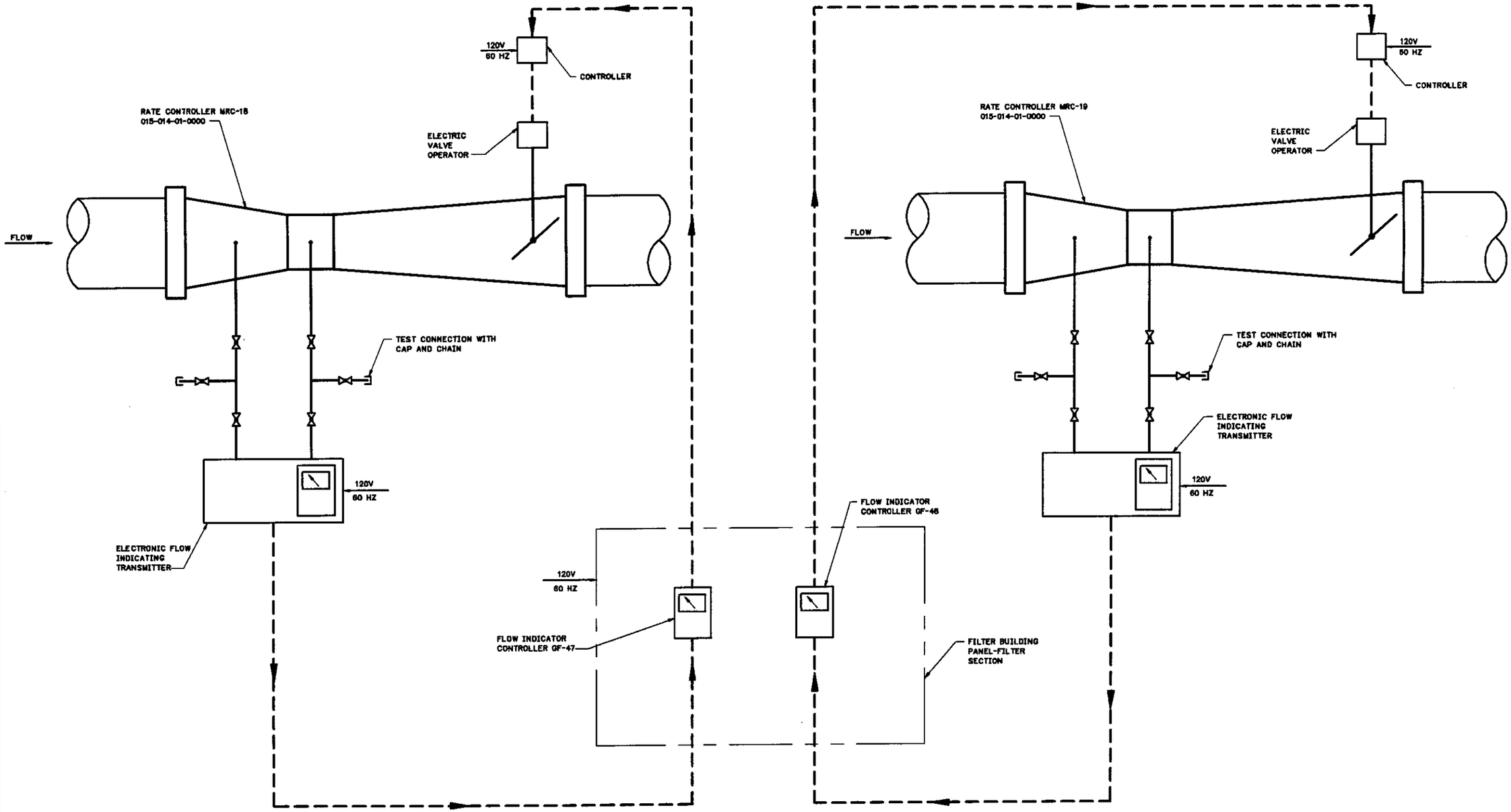

FIGURE III-FL-FB-6 RATE CONTROLLER
MRC-18 AND MRC-19 DIAGRAM

GREELEY AND HANSEN
ENGINEERS

FILE: FL-FB-6 1:1 03/04/99 10:15 GH-E

FIGURE III-FL-FB-6
RATE CONTROLLERS MRC-18 AND
MRC-19 DIAGRAM

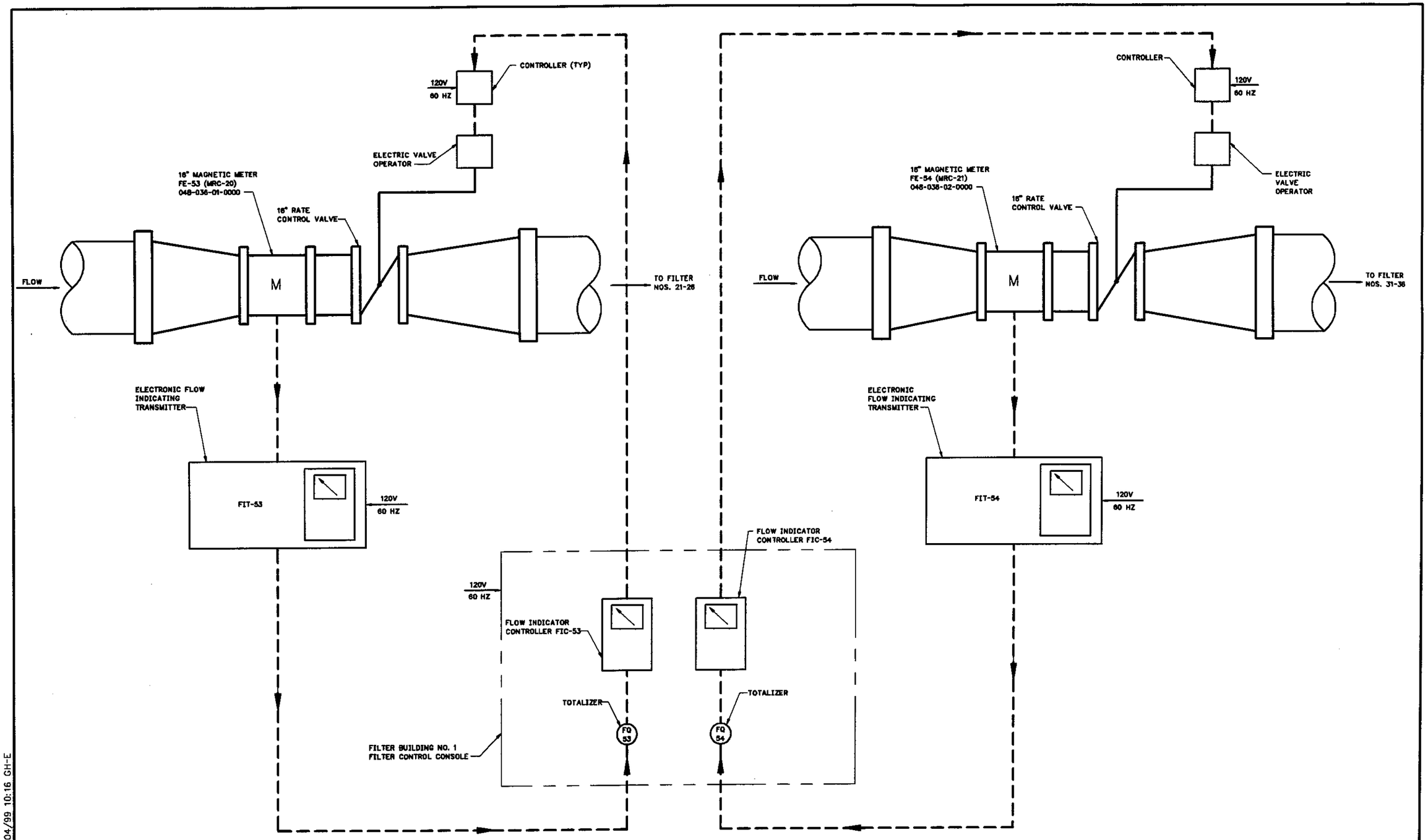

FIGURE III-FL-FB-7 RATE CONTROLLERS
FE-53 (MRC-20) AND FE-54 (MRC-21)

FILE: FL-FB-7 1:1 03/04/99 10:16 GH-E

GREELEY AND HANSEN
ENGINEERS

FIGURE III-FL-FB-7
RATE CONTROLLERS FE-53 (MRC-20) AND
FE-54 (MRC-21)

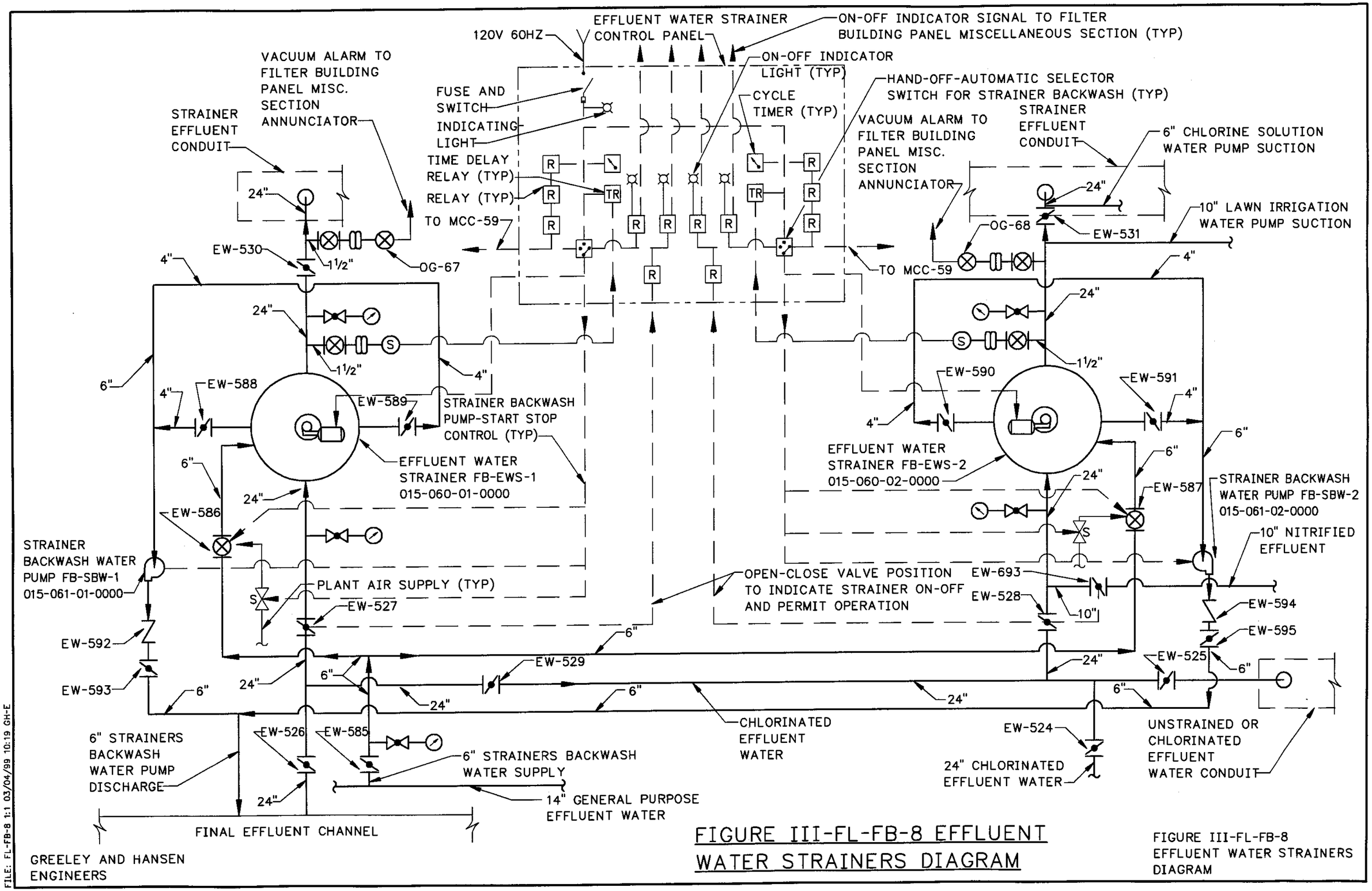

FIGURE III-FL-FB-8 EFFLUENT WATER STRAINERS DIAGRAM

FIGURE III-FL-FB-8
EFFLUENT WATER STRAINERS
DIAGRAM

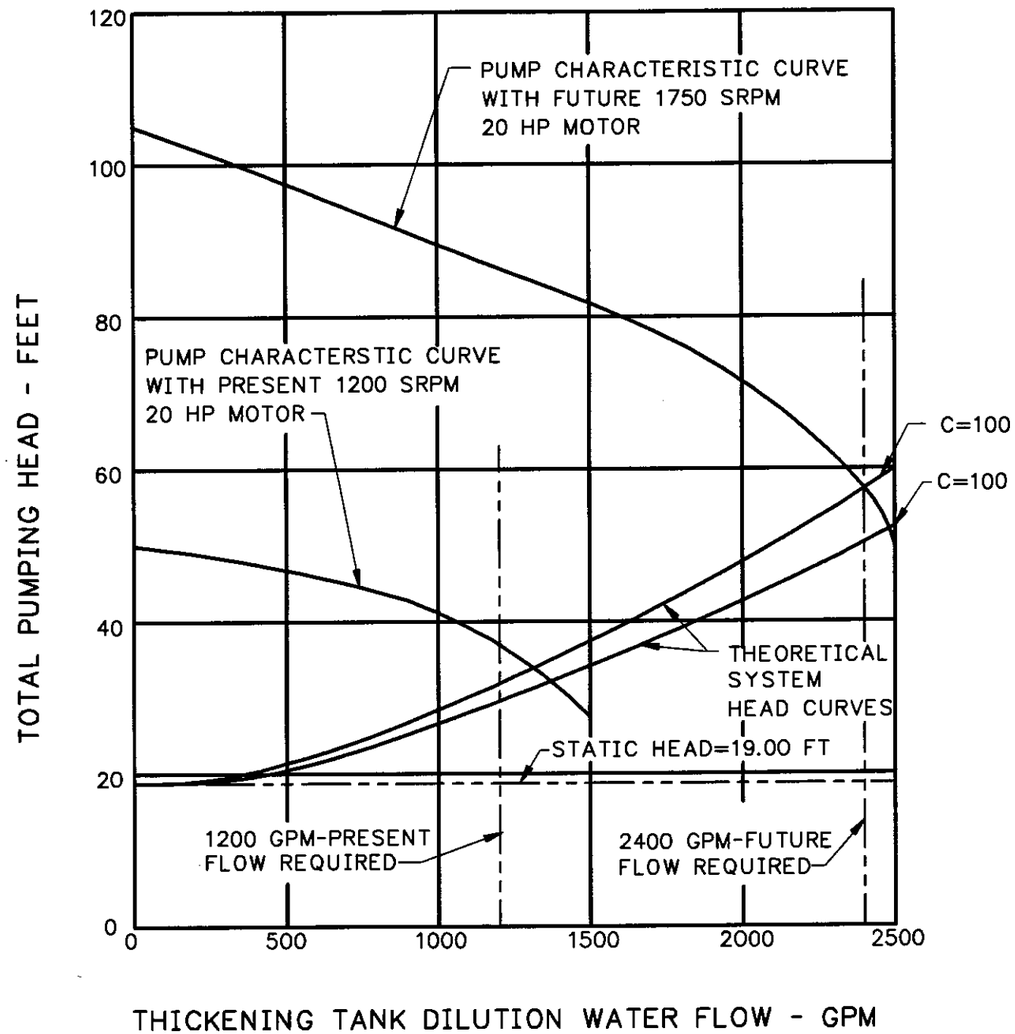

FIGURE III-FL-FB-9 THICKENING TANKS DILUTION WATER PUMPS DISCHARGE CURVES

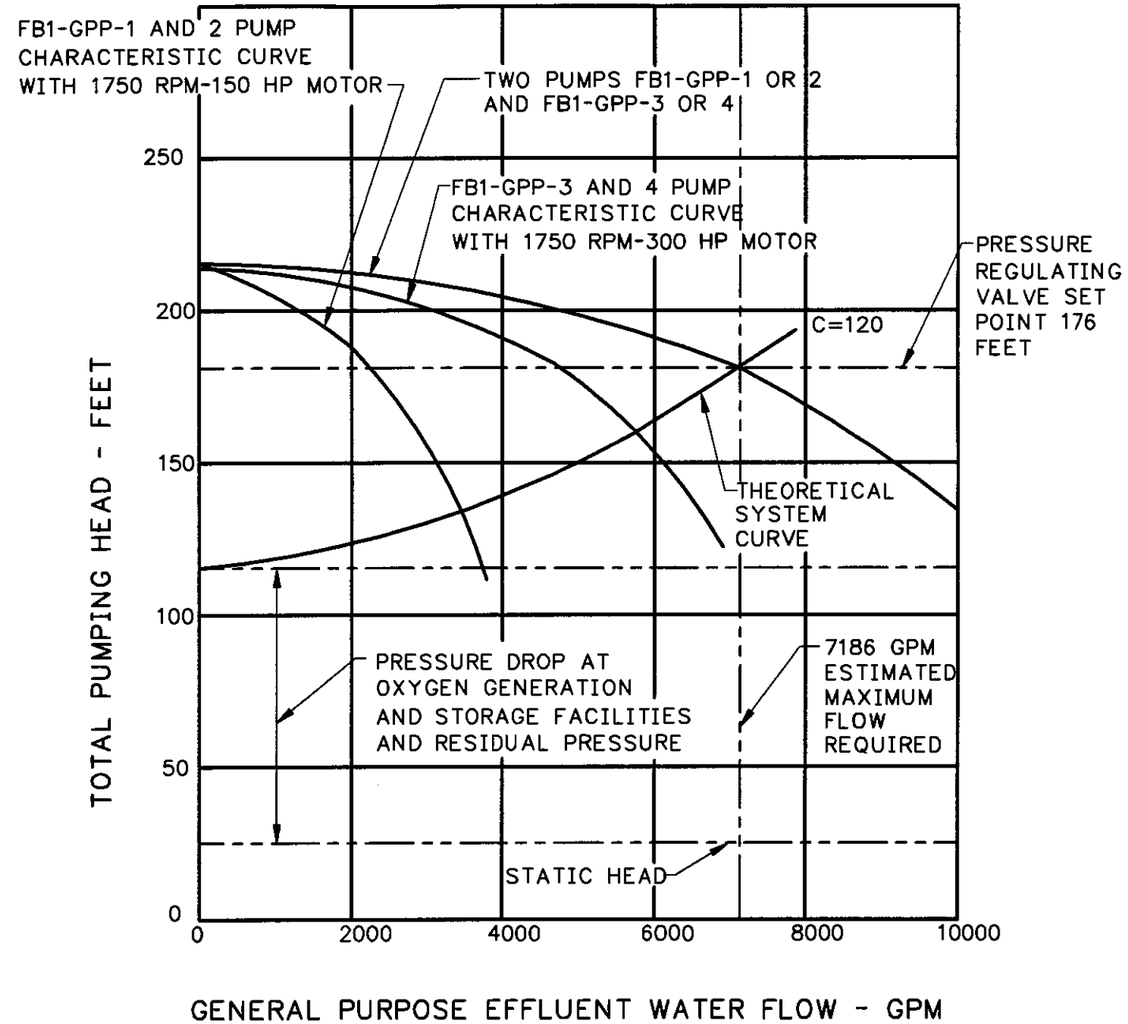

FIGURE III-FL-FB-10 GENERAL PURPOSE EFFLUENT WATER PUMPS DSCHARGE CURVES

FIGURE III-FL-FB-9
THICKENING TANKS DILUTION
WATER PUMPS DISCHARGE CURVES
FIGURE III-FL-FB-10
GENERAL PURPOSE EFFLUENT
WATER PUMPS DISCHARGE CURVES

GREELEY AND HANSEN
ENGINEERS

FILE: FL-FB-10 1:1 03/04/99 10:20 GH-E

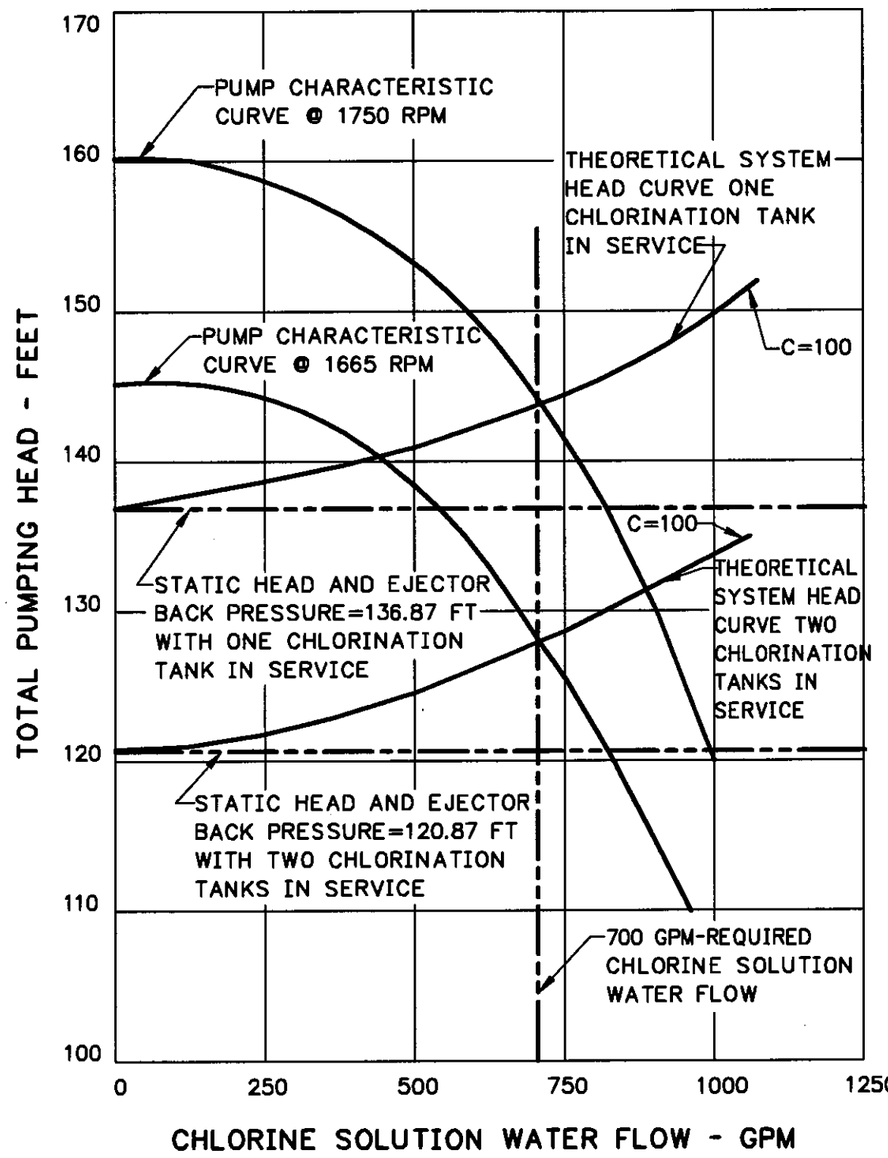

FIGURE III-FL-FB-11 CHLORINE SOLUTION WATER PUMPS DISCHARGE CURVES

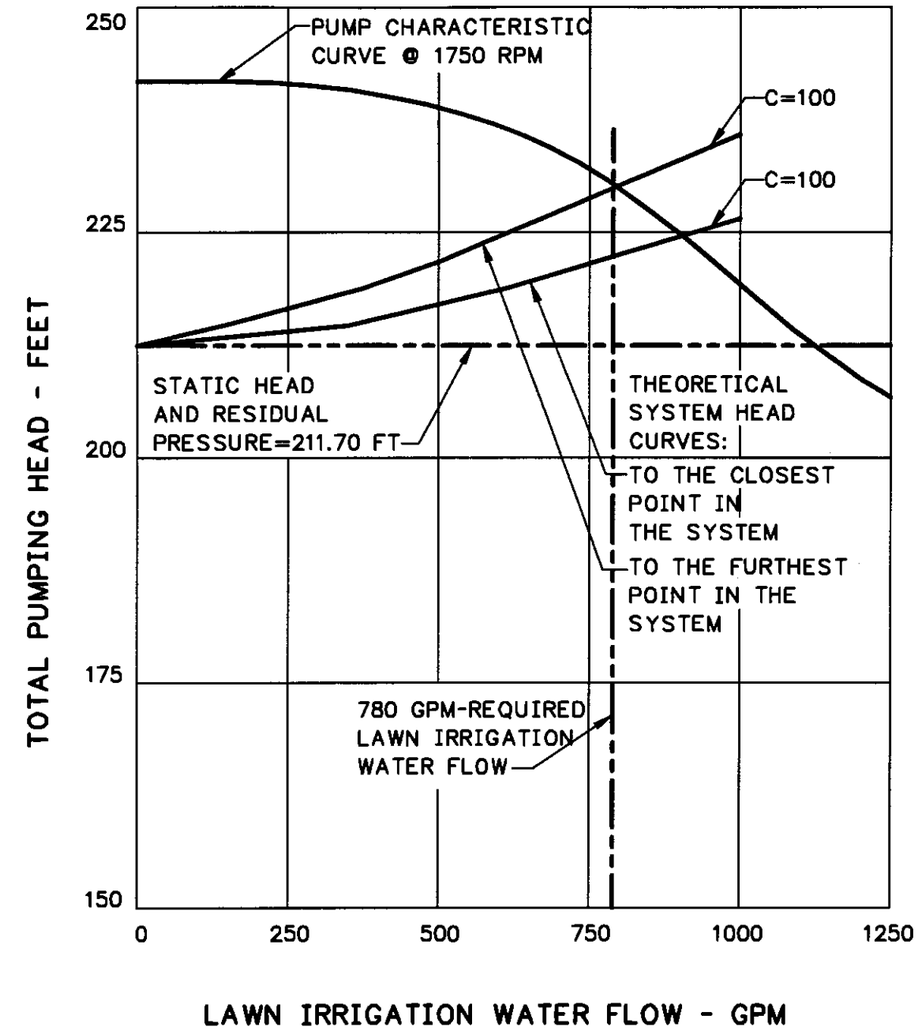

FIGURE III-FL-FB-12 LAWN IRRIGATION WATER PUMPS DISCHARGE CURVES

FILE: FL-FB-12 1:1 03/04/99 10:21 GH-E

GREELEY AND HANSEN
ENGINEERS

FIGURE III-FL-FB-11 CHLORINE SOLUTION WATER PUMPS DISCHARGES CURVES
FIGURE III-FL-FB-12 LAWN IRRIGATION WATER PUMPS DISCHARGE CURVES

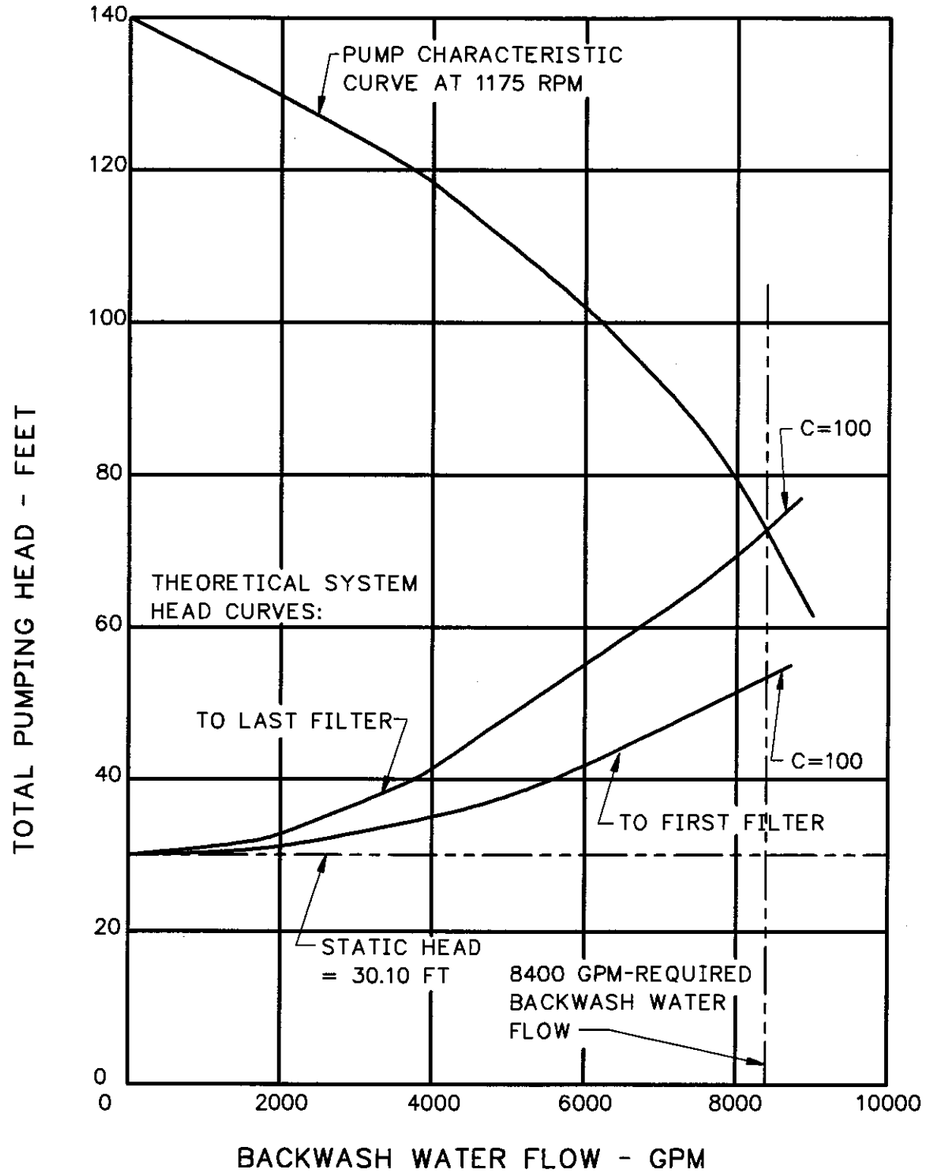

FIGURE III-FL-FB-13 FILTER BUILDING NO.1
BACKWASH WATER PUMPS DISCHARGE CURVES

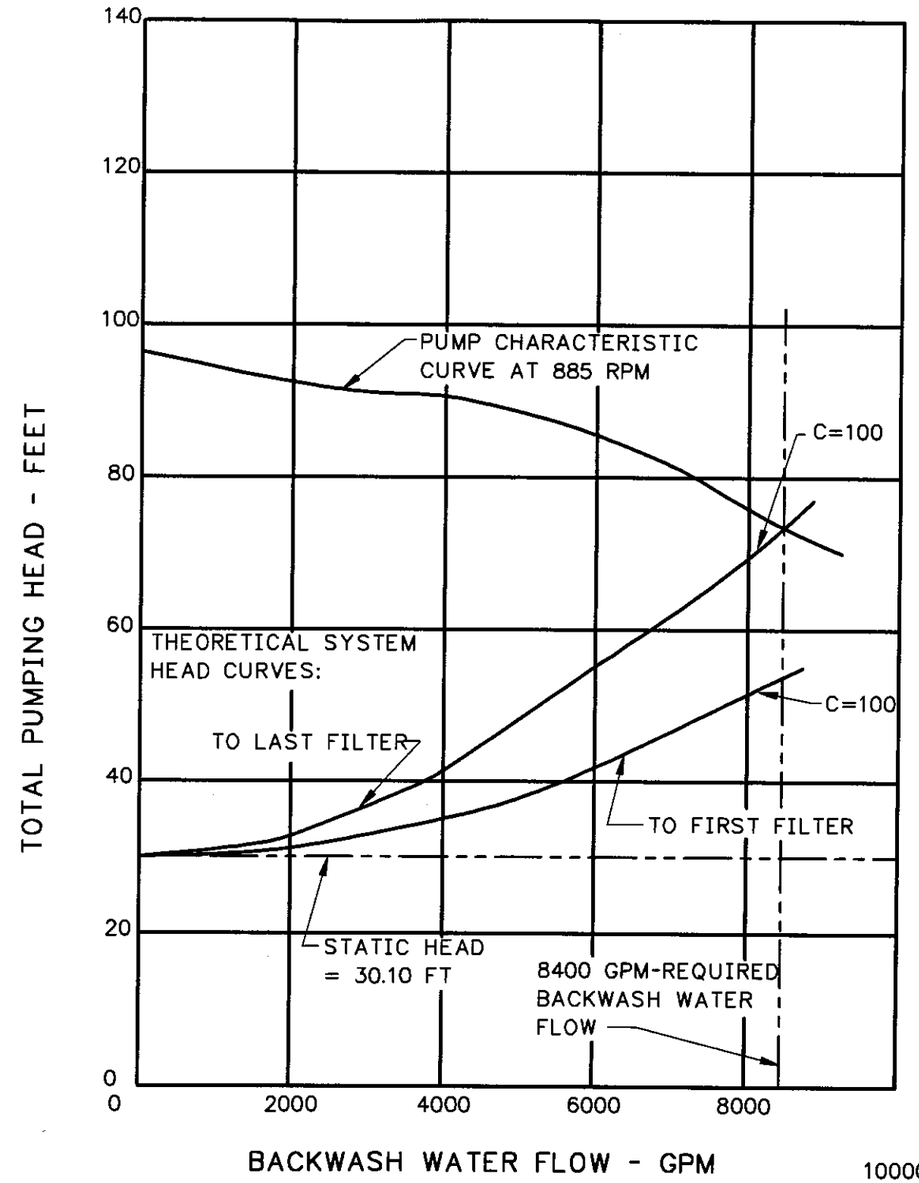

FIGURE III-FL-FB-14 FILTER BUILDING NO.2
BACKWASH WATER PUMPS DISCHARGE CURVES

FIGURE III-FL-FB-13
BACKWASH WATER PUMPS
FILTER BUILDING NO. 1
FIGURE III-FL-FB-14
BACKWASH WATER PUMPS
FILTER BUILDING NO. 2

GREELEY AND HANSEN
ENGINEERS

FILE: FL-FB-14 1:1 03/04/99 10:21 GH-E

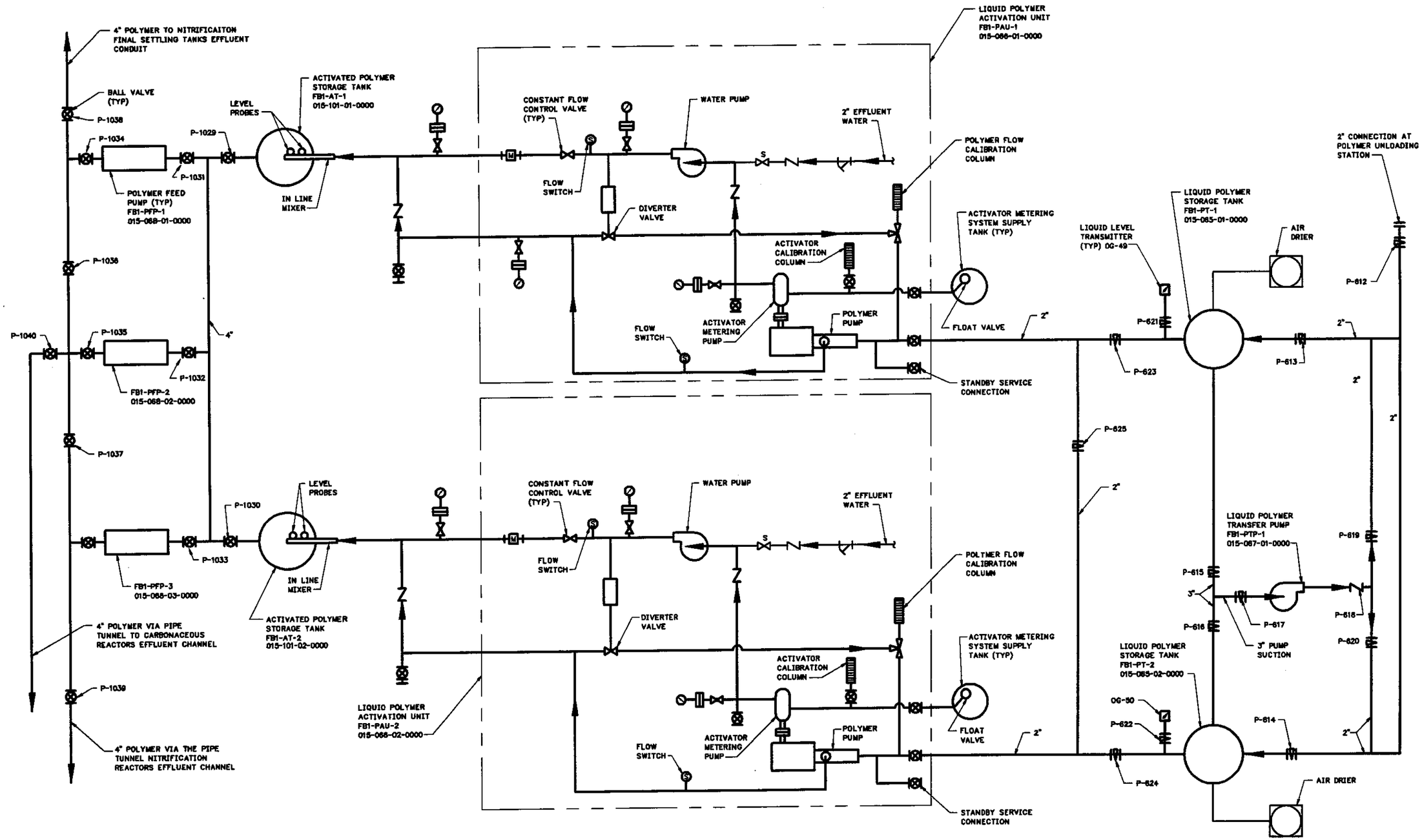

FIGURE III-FL-FB-15
POLYMER SYSTEM DIAGRAM

GREELEY AND HANSEN
ENGINEERS

FILE: FL-FB-15 1:1 03/04/99 10:23 GH-E

FIGURE III-FL-FB-15
POLYMER SYSTEM DIAGRAM

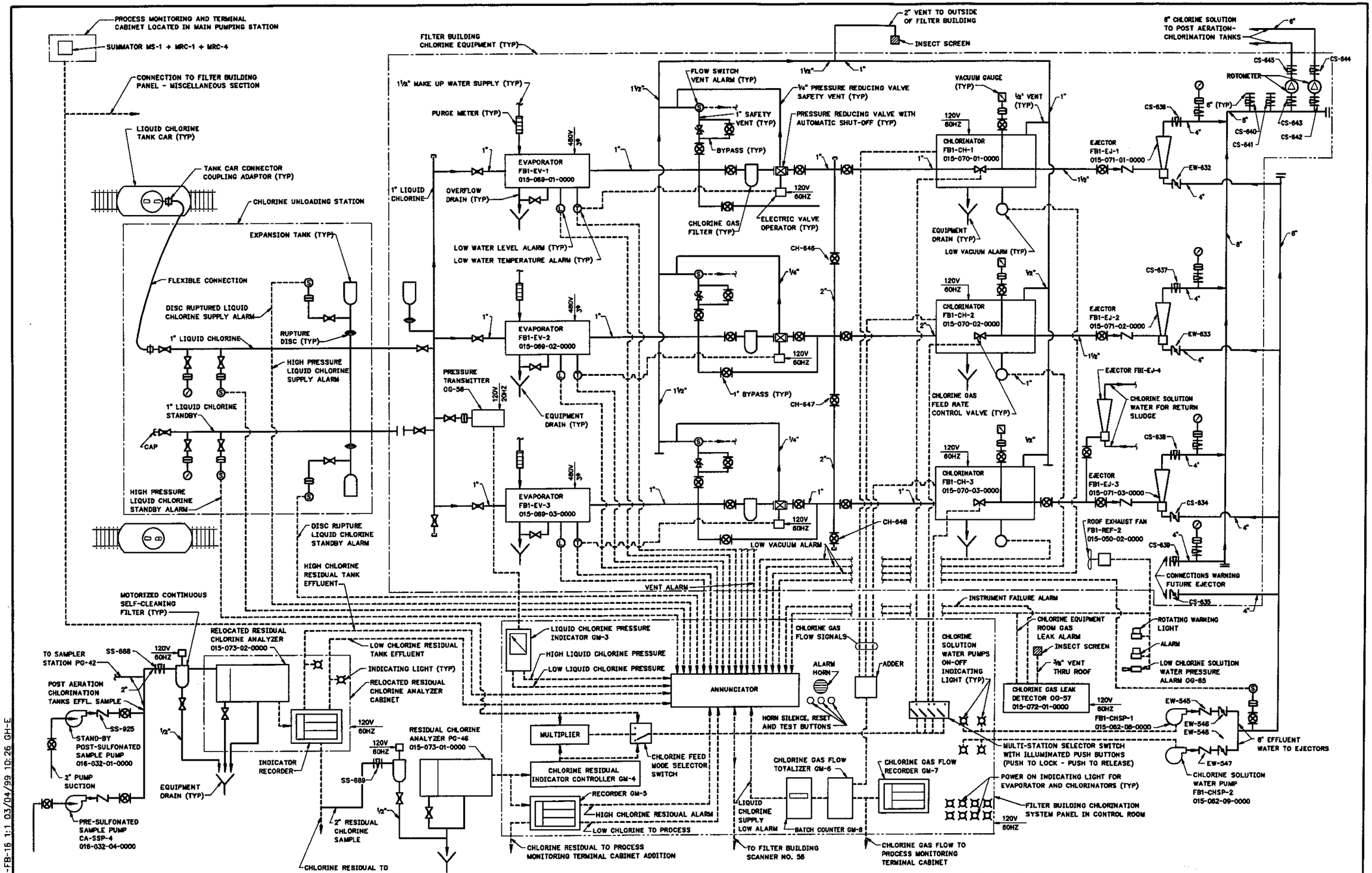

FIGURE III-FL-FB-16 CHLORINE SYSTEM DIAGRAM

GREELEY AND HANSEN ENGINEERS

FILE: FL-FB-16 1:1 03/04/99 10:26 GH-E

FIGURE III-FL-FB-16
CHLORINE SYSTEM DIAGRAM

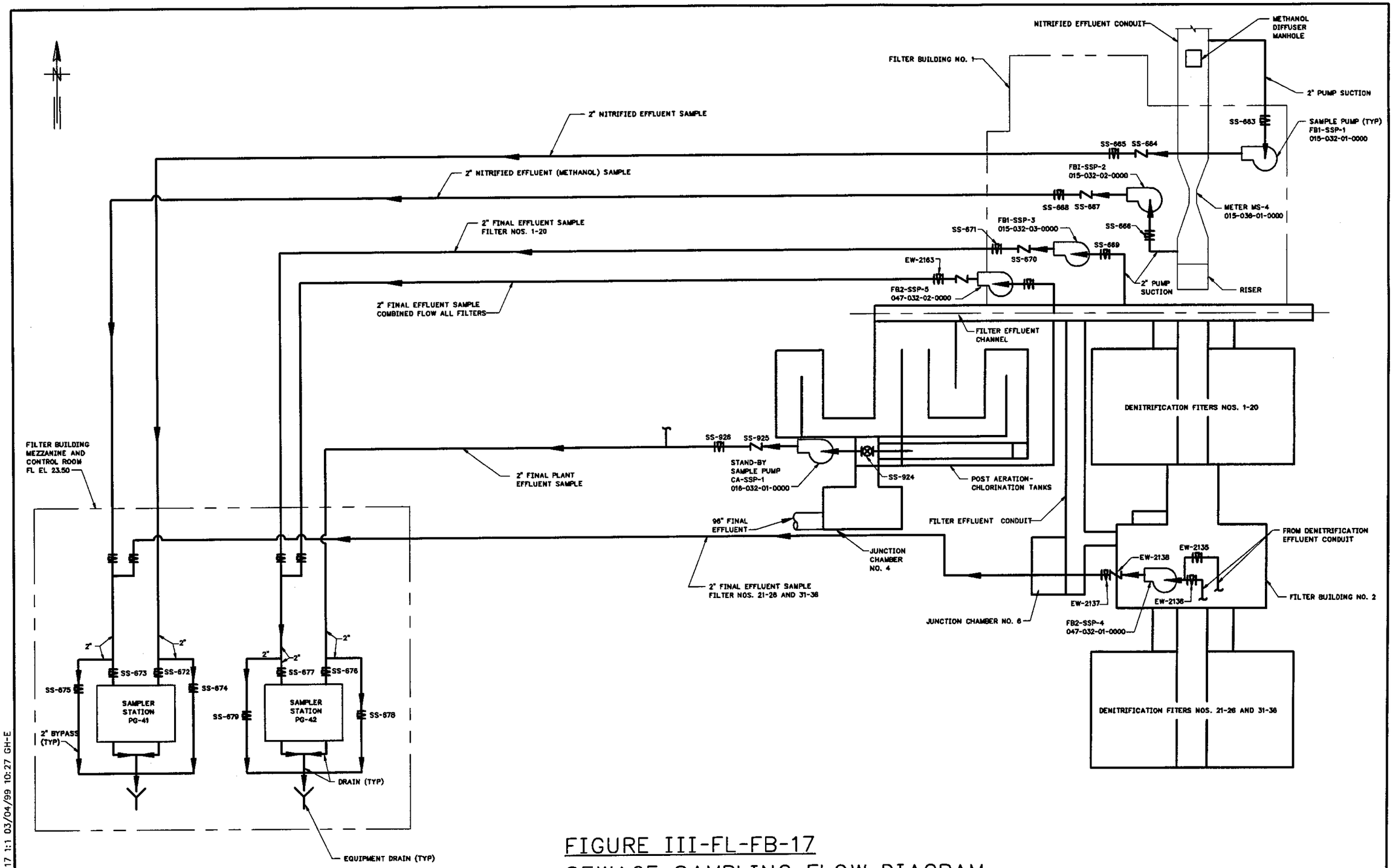

FIGURE III-FL-FB-17
SEWAGE SAMPLING FLOW DIAGRAM

GREELEY AND HANSEN
ENGINEERS

FILE: FL-FB-17 1:1 03/04/99 10:27 GH-E

FIGURE III-FL-FB-17
SEWAGE SAMPLING FLOW DIAGRAM

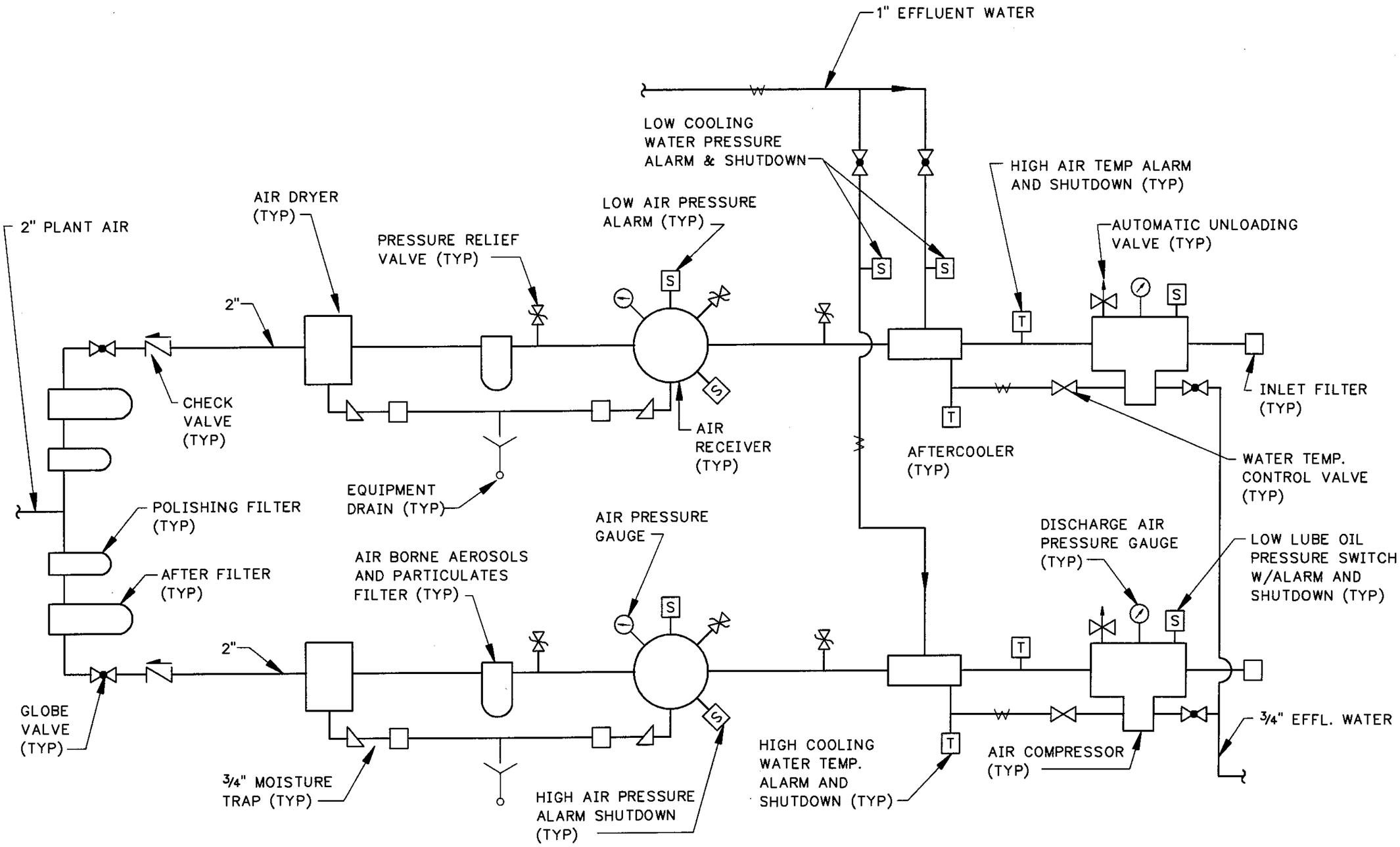

FIGURE III-FL-FB-18
PLANT AIR COMPRESSOR DIAGRAM
NOT TO SCALE

GREELEY AND HANSEN ENGINEERS

FILE: FL-FB-1B 1:1 01/15/99 13:44 GH-A

FIGURE III-FL-FB-18
PLANT AIR
COMPRESSOR DIAGRAM

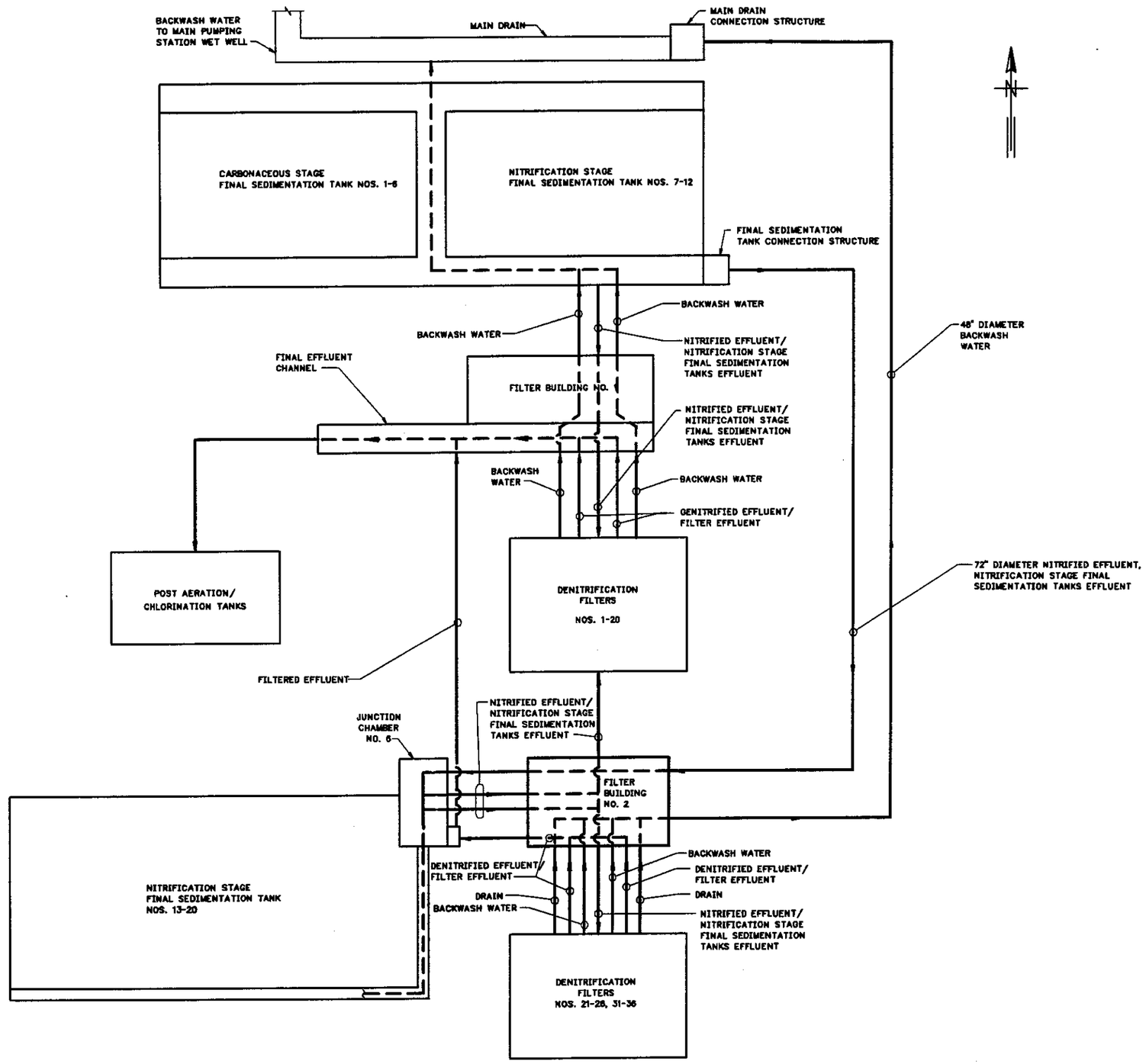

FIGURE III-FL-DF-1 DENITRIFICATION FILTERS AND MISC. FACILITIES FLOW DIAGRAM

GREELEY AND HANSEN ENGINEERS

FILE: FL-DF-1 1:1 03/04/99 12:50 GH-E

FIGURE III-FL-DF-1
DENITRIFICATION FILTERS
AND MISC. FACILITIES
FLOW DIAGRAM

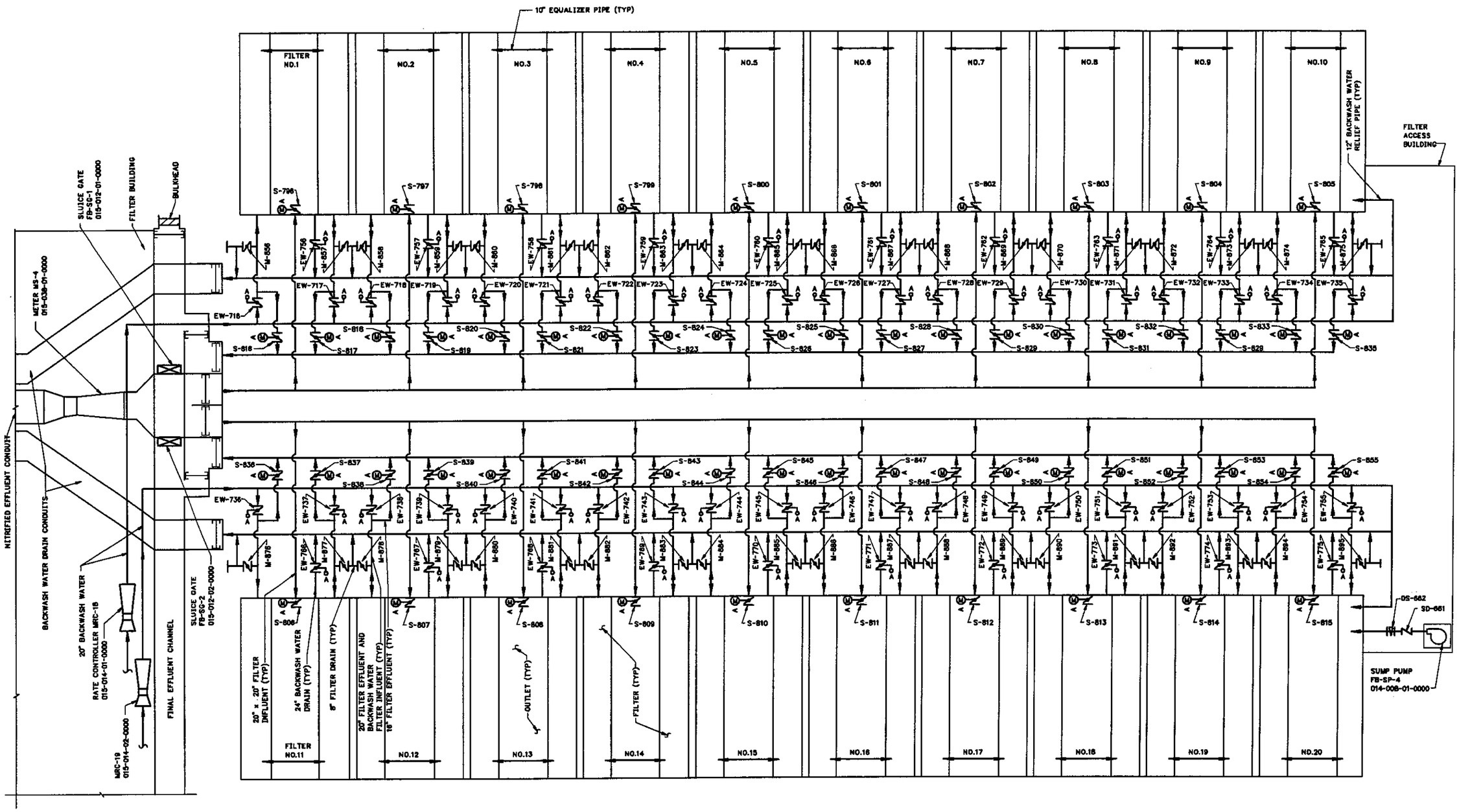

FIGURE III-FL-DF-2 DENITRIFICATION FILTERS SCHEMATIC

GREELEY AND HANSEN
ENGINEERS

FIGURE III-FL-DF-2
DENITRIFICATION FILTERS
SCHEMATIC

FILE: FL-DF-2 1:1 03/04/99 12:54 GH-E

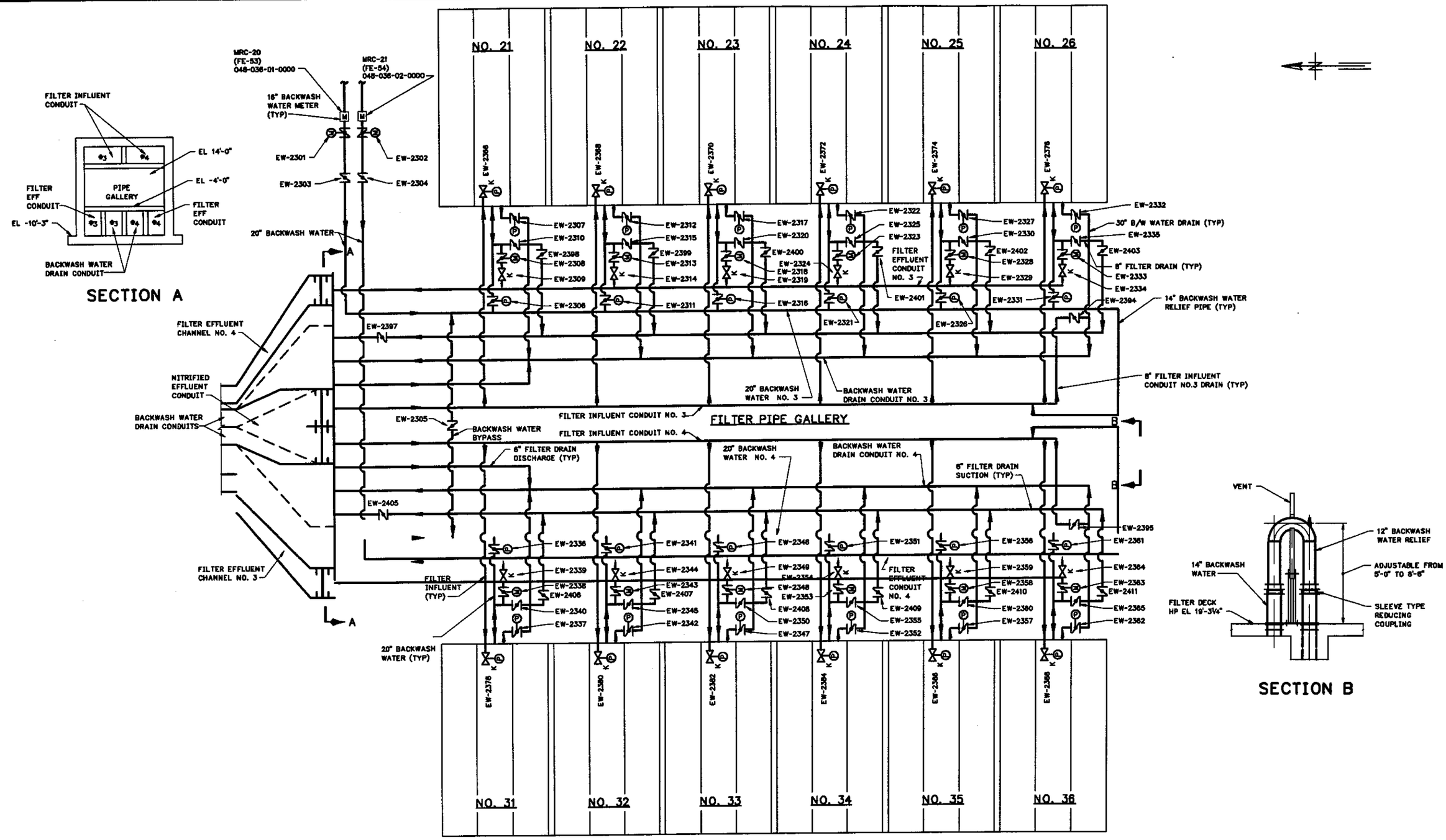

FIGURE III-FL-DF-3 DENITRIFICATION FILTER NOS. 21-26 AND 31-36 SCHEMATIC

GREELEY AND HANSEN ENGINEERS

FILE: FL-DF-3 1:1 03/04/99 10:08 GH-E

FIGURE III-FL-DF-3
DENITRIFICATION FILTER NOS. 21-26
AND 31-36 SCHEMATIC

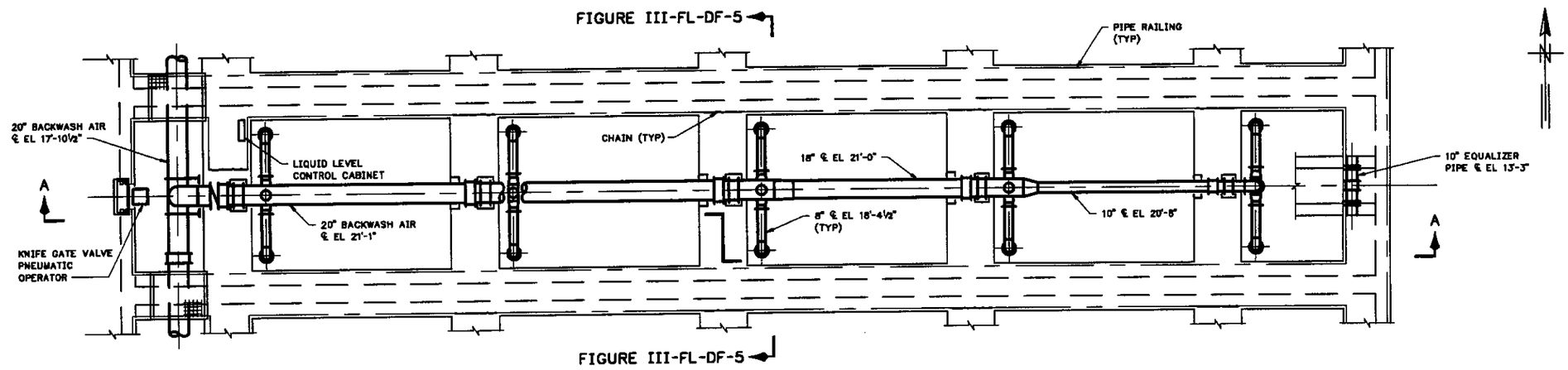

TYPICAL FILTER PLAN

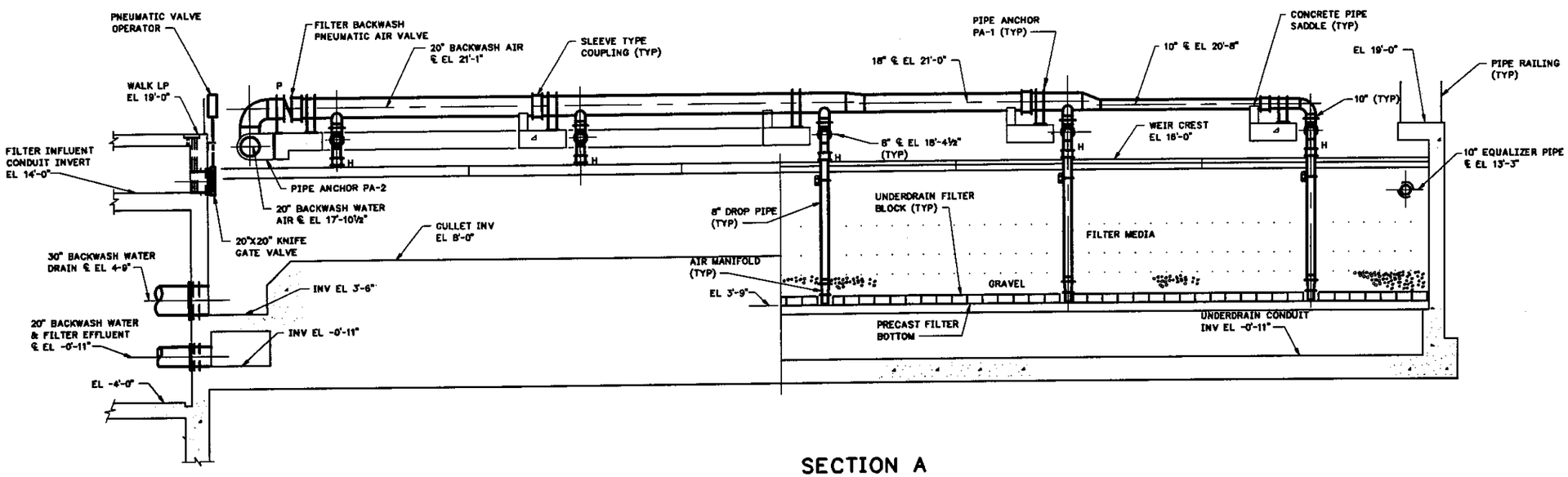

SECTION A

FIGURE III-FL-DF-4 TYPICAL DENITRICATION FILTER PLAN AND SECTION

GREELEY AND HANSEN ENGINEERS

FIGURE III-FL-DF-4
TYPICAL DENITRIFICATION
FILTER PLAN AND SECTION

FILE: FL-DF-4 1:1 03/04/99 14:09 GH-E

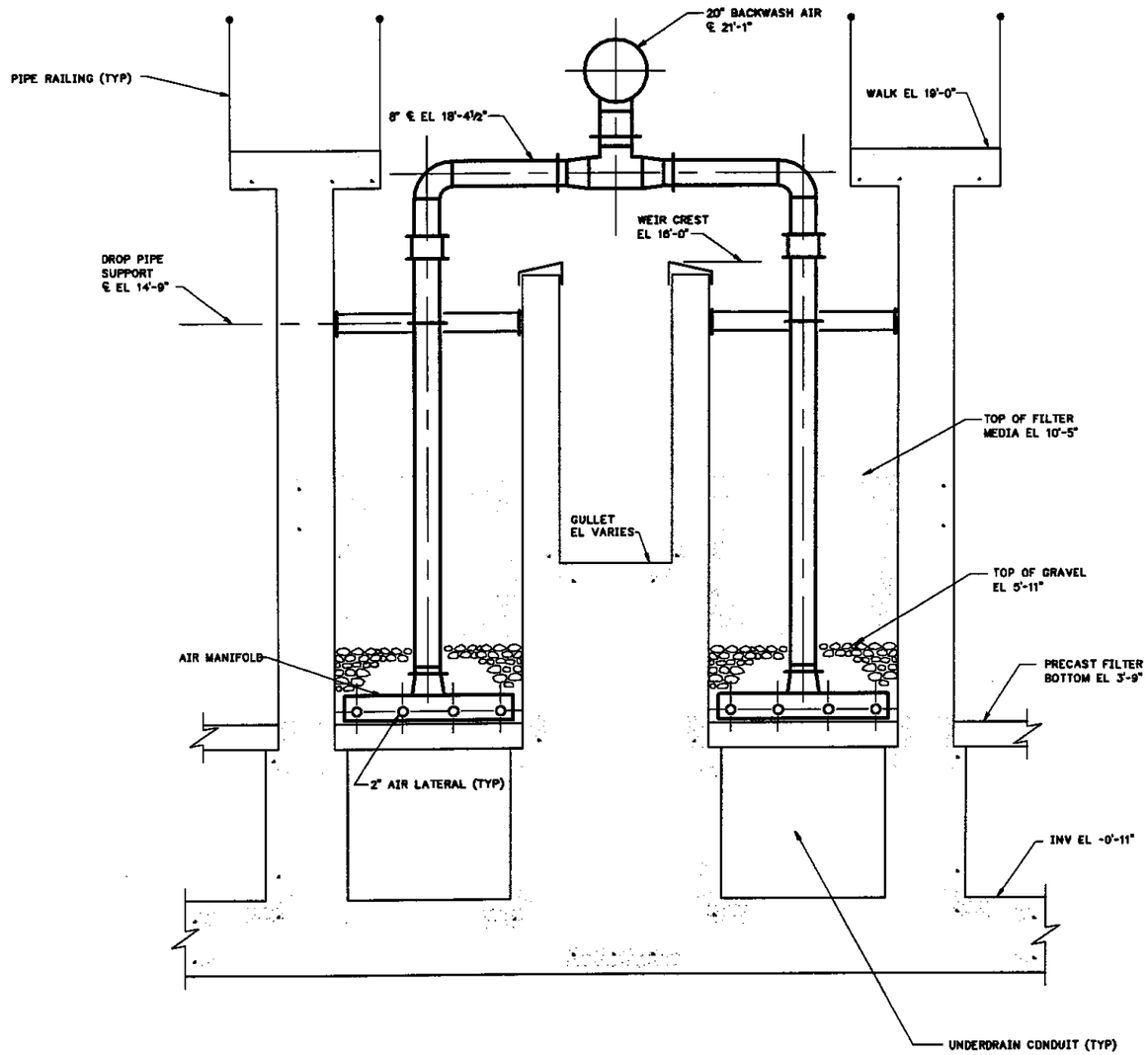

FIGURE III-FL-DF-5 TYPICAL
DENITRIFICATION FILTER SECTION

FILE: FL-DF-5 1:1 03/04/99 14:14 GH-E

GREELEY AND HANSEN
ENGINEERS

FIGURE III-FL-DF-5
TYPICAL DENITRIFICATION
FILTER SECTION

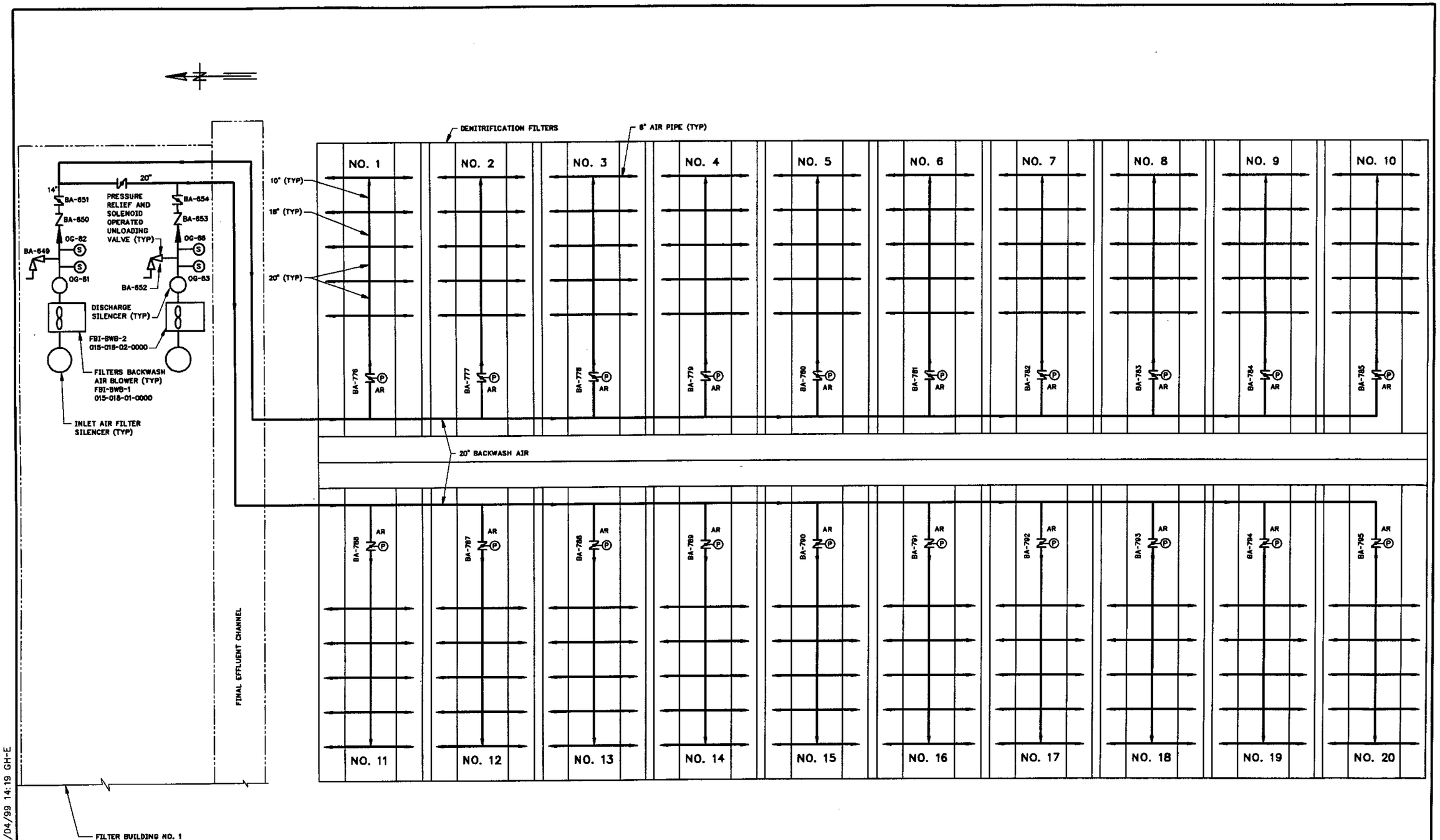

FIGURE III-FL-DF-6 DENITRIFICATION FILTER NOS. 1-20 BACKWASH AIR SCHEMATIC

FILE: FL-DF-6 1:1 03/04/99 14:19 GH-E

GREELEY AND HANSEN ENGINEERS

FIGURE III-FL-DF-6
DENITRIFICATION FILTER NOS. 1-20
BACKWASH AIR SCHEMATIC

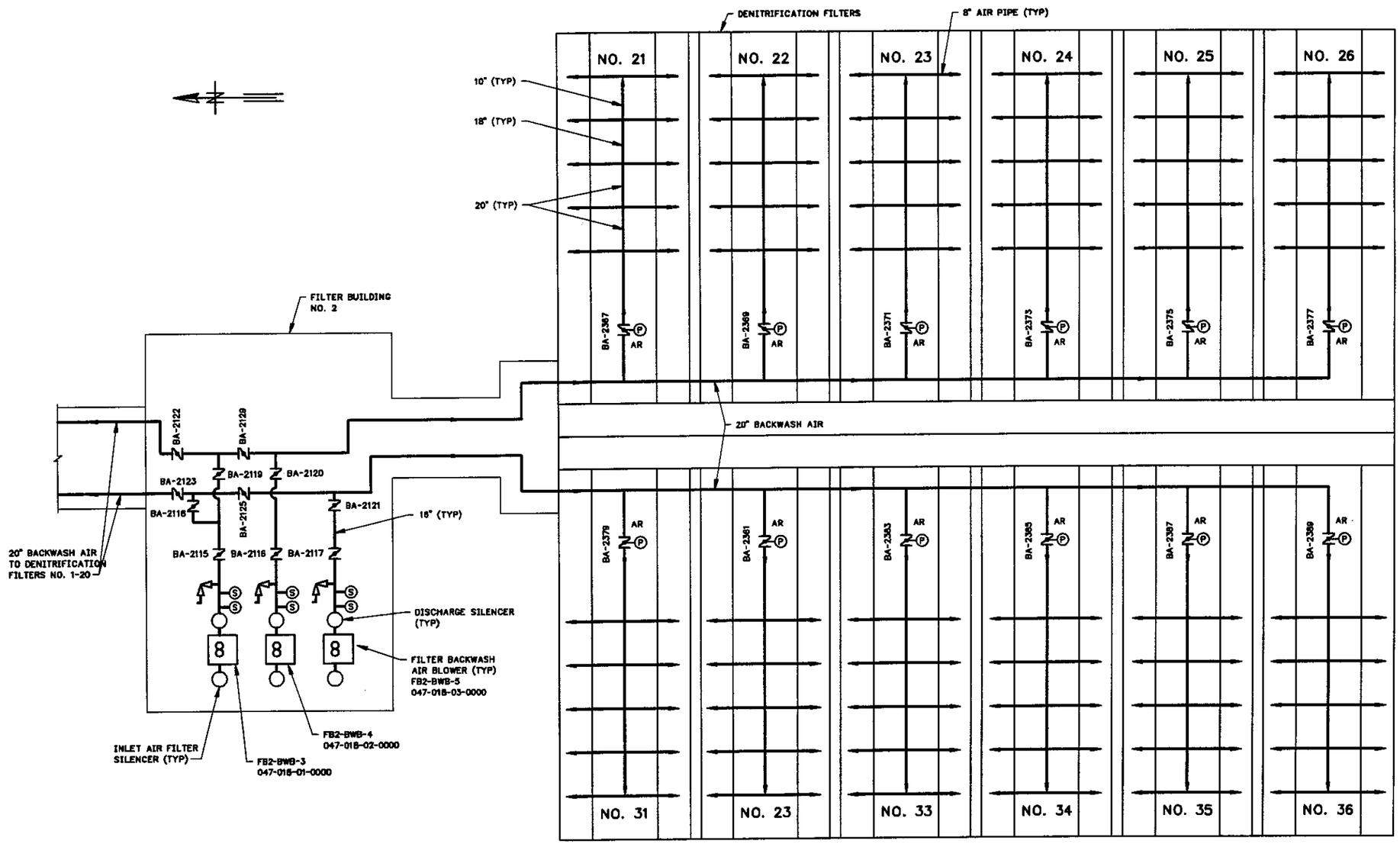

FIGURE III-FL-DF-7 DENITRICATION FILTER
NOS. 21-26 AND 31-36 BACKWASH AIR SCHEMATIC

GREELEY AND HANSEN
ENGINEERS

FIGURE III-FL-DF-7
DENITRIFICATION FILTER
NOS. 21-26 AND 31-36
BACKWASH AIR SCHEMATIC

FILE: FL-DF-7 1:1 03/04/99 14:23 GH-E

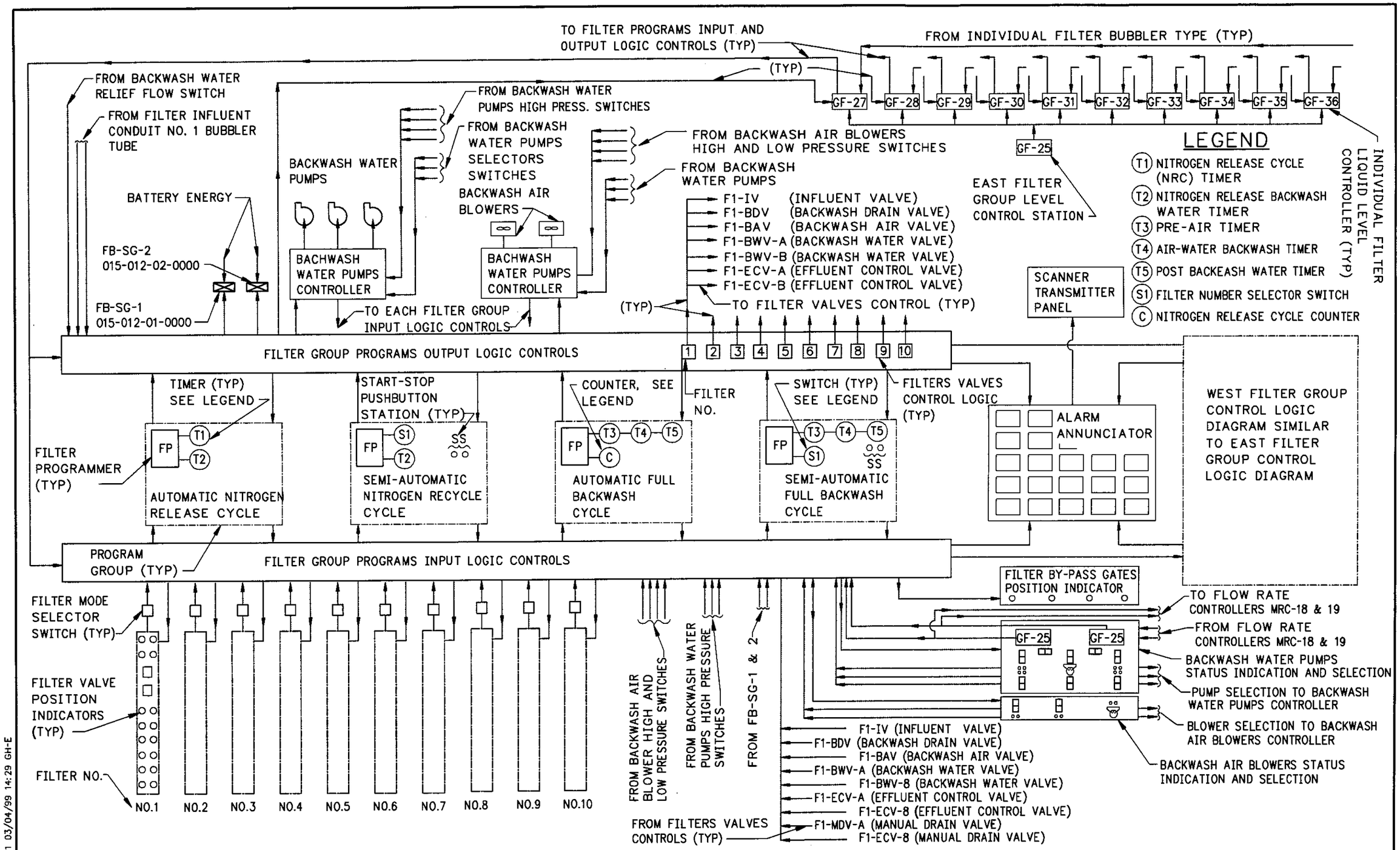

FIGURE III-FL-DF-8 DENITRICATION FILTERS GENERAL INSTRUMENT AND CONTROL DIAGRAM

FIGURE III-FL-DF-8 DENITRIFICATION FILTERS GENERAL INSTRUMENT AND CONTROL DIAGRAMS

GREELEY AND HANSEN ENGINEERS

FILE: FL-DF-8 1:1 03/04/99 14:29 GH-E

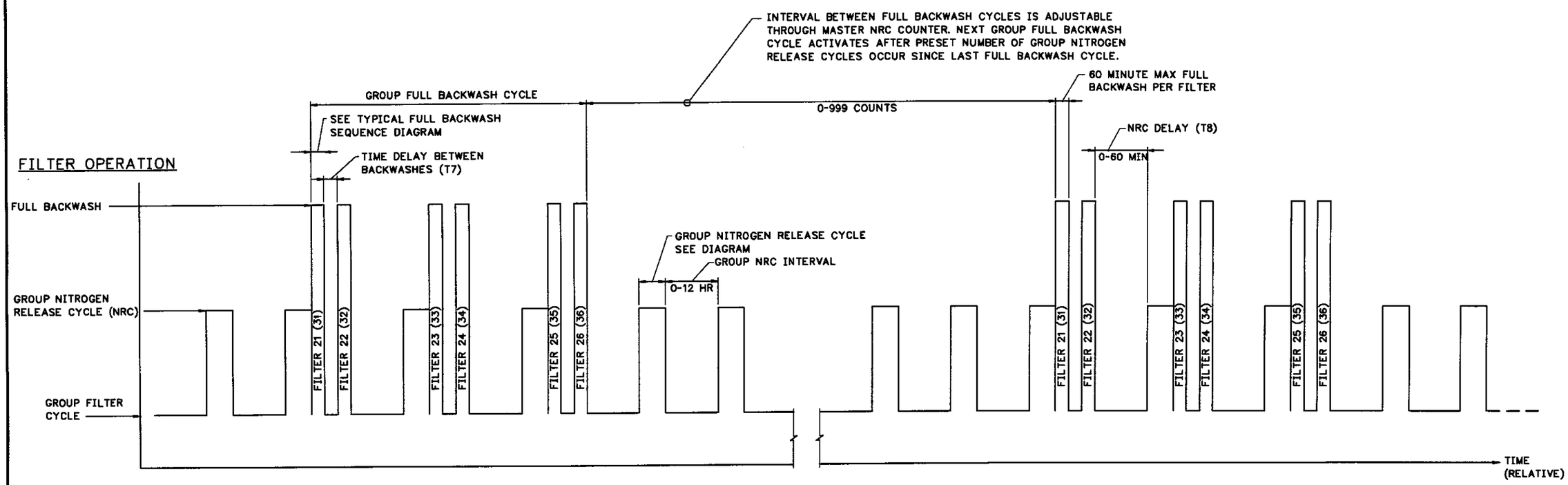

FIGURE III-FL-DF-9 DENITRIFICATION FILTER
TYPICAL GROUP OPERATION DIAGRAM

FILE: FL-DF-9 1:1 03/04/99 14:31 GH-E

GREELEY AND HANSEN
ENGINEERS

FIGURE III-FL-DF-9
DENITRIFICATION FILTER
TYPICAL GROUP OPERATION DIAGRAM

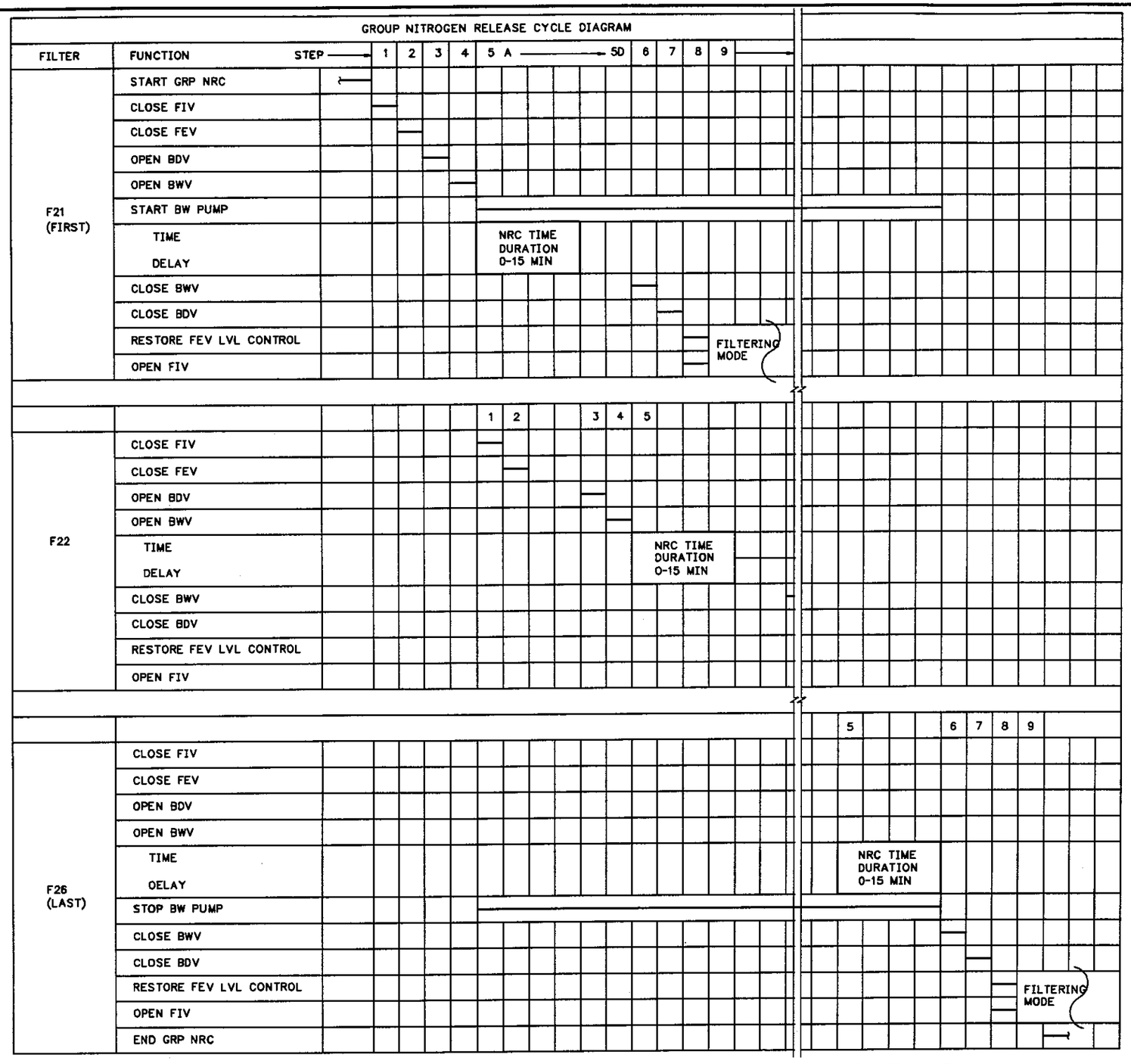

FIGURE III-FL-DF-10 DENITRIFICATION FILTER TYPICAL NITROGEN RELEASE CYCLE DIAGRAM

GREELEY AND HANSEN ENGINEERS

FIGURE III-FL-DF-10
DENITRIFICATION FILTER TYPICAL
GROUP NITROGEN RELEASE
CYCLE DIAGRAM

FILE: FL-DF-10 1:1 03/04/99 14:32 GH-E

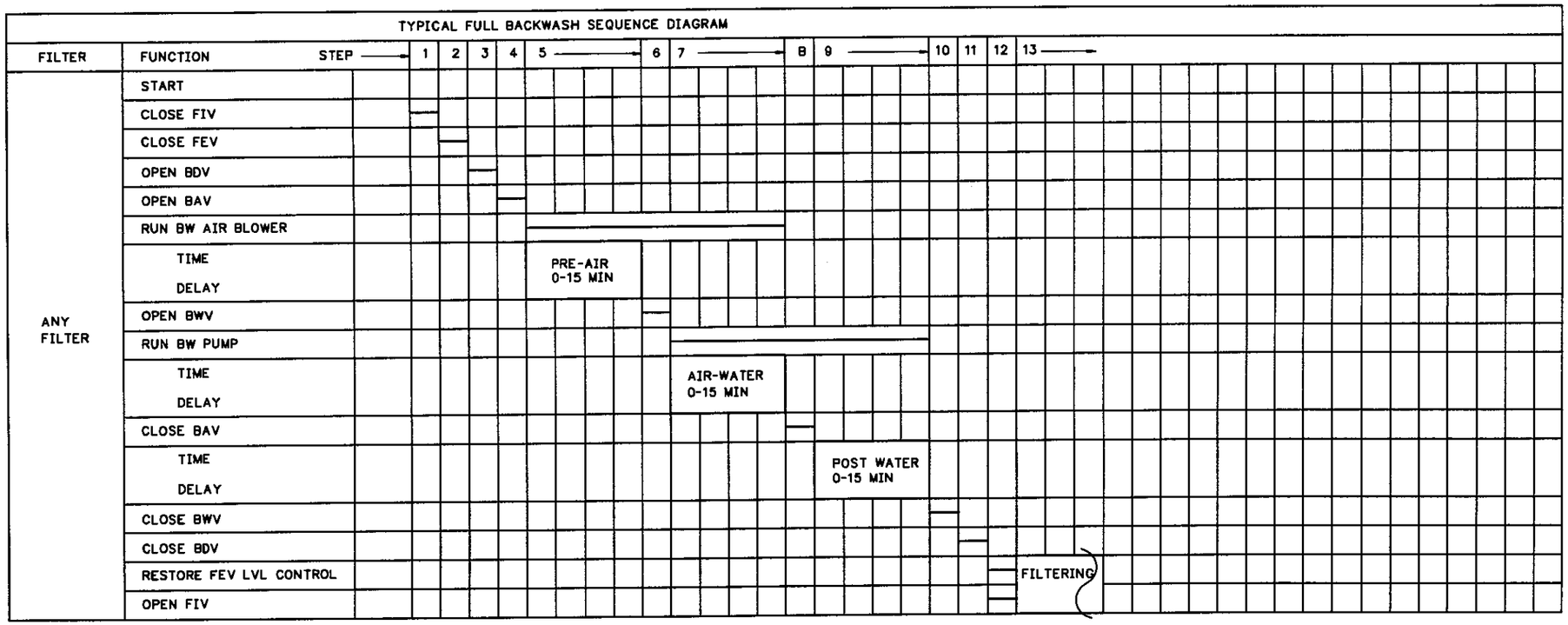

FIGURE III-FL-DF-11 DENITRICATION TYPICAL FULL BACKWASH SEQUENCE DIAGRAM

FILE: FL-DF-11 1:1 03/04/99 14:32 GH-E

GREELEY AND HANSEN
ENGINEERS

FIGURE III-FL-DF-11
DENITRIFICATION TYPICAL
FULL BACKWASH
SEQUENCE DIAGRAM

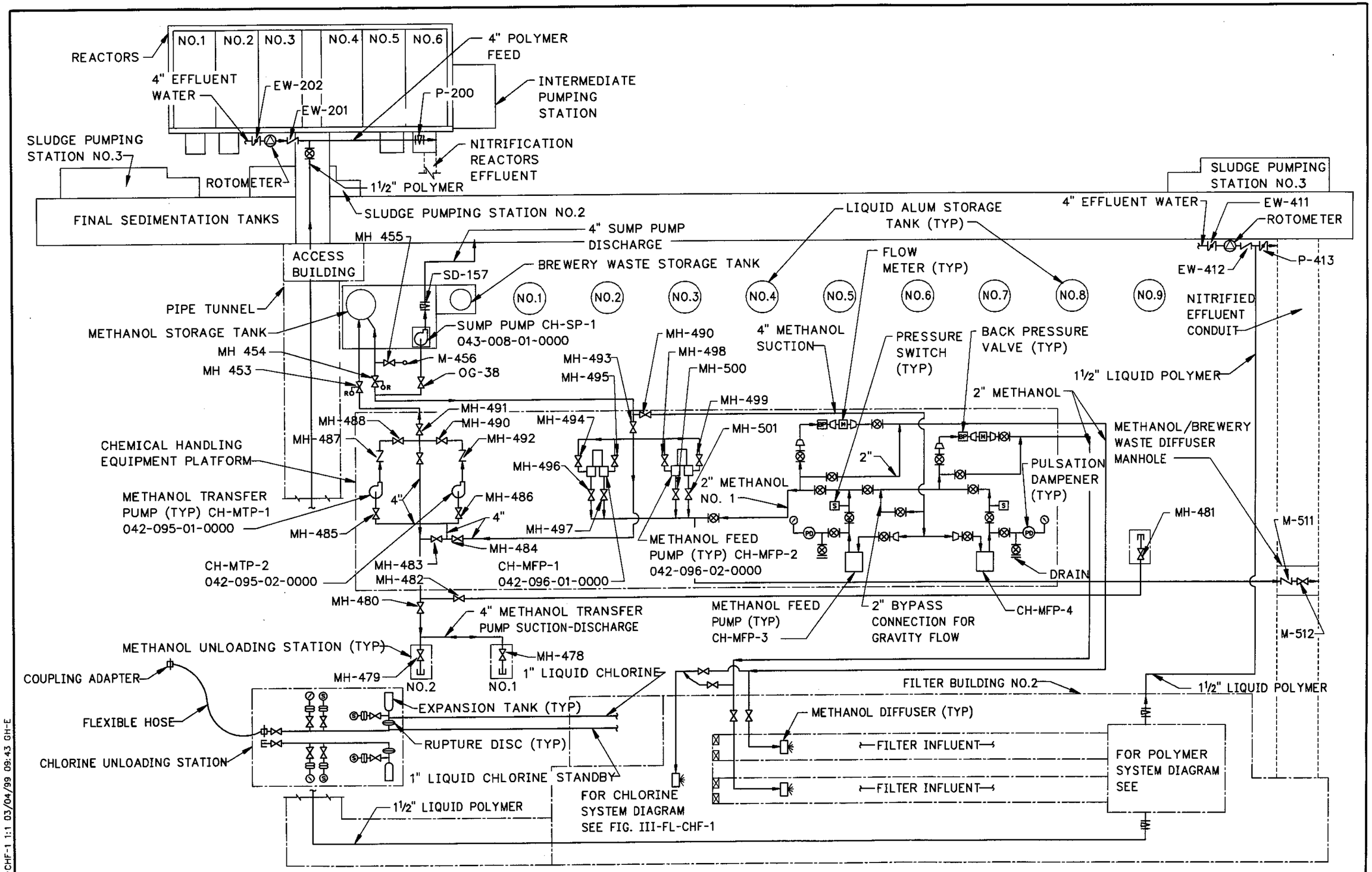

FILE: FL-CHF-1 1:1 03/04/99 09:43 GH-E

GREELEY AND HANSEN ENGINEERS

FIGURE III-FL-CHF-1 CHEMICAL SYSTEM DIAGRAM

FIGURE III-FL-CHF-1
CHEMICAL SYSTEM DIAGRAM

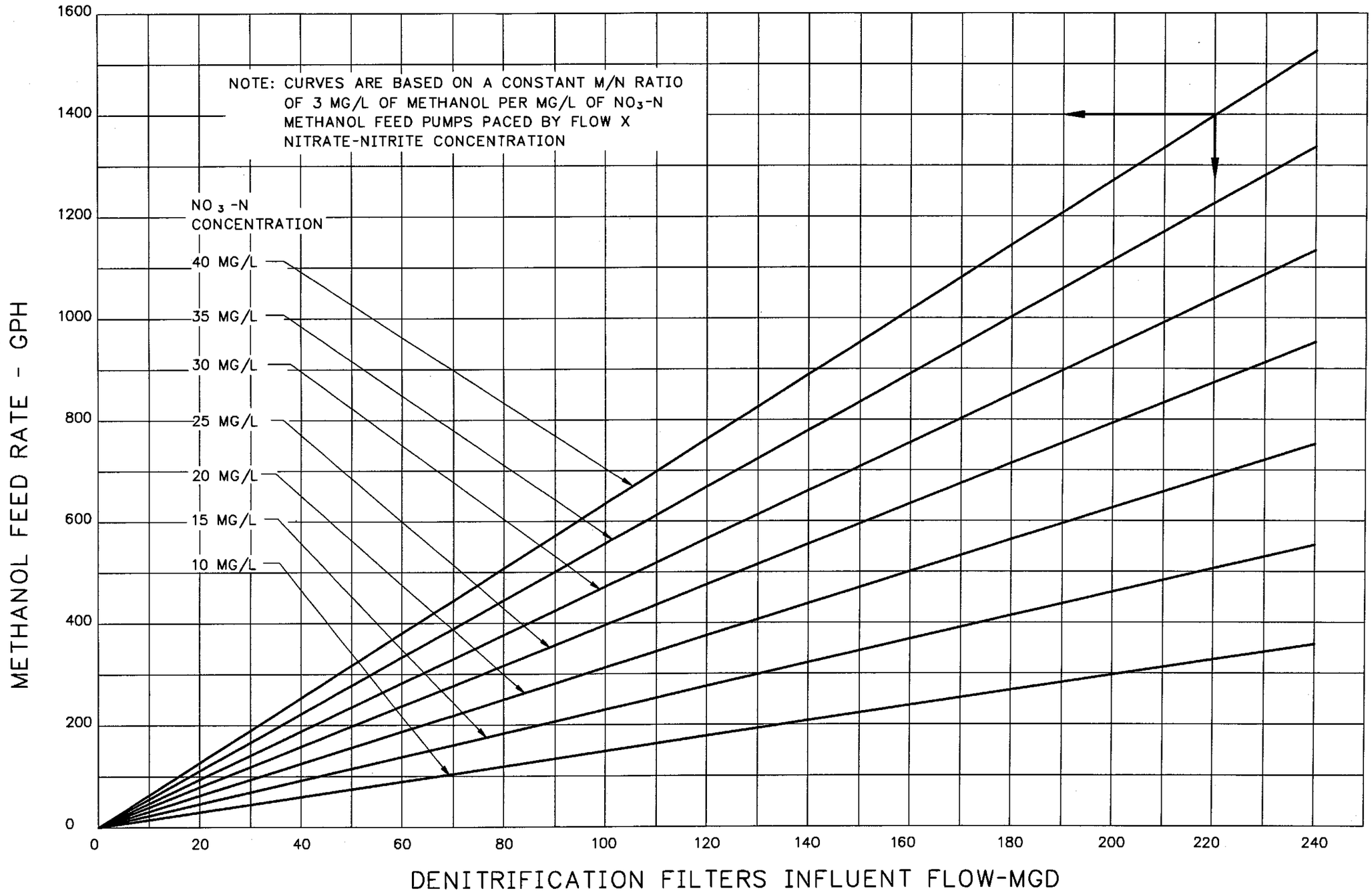

FIGURE FL-CHF-2 METHANOL USAGE CURVES

GREELEY AND HANSEN
ENGINEERS

FIGURE III-FL-CHF-2
METHANOL USAGE CURVES

FILE: FL-CHF-2 1:1 03/04/99 10:03 GH-E

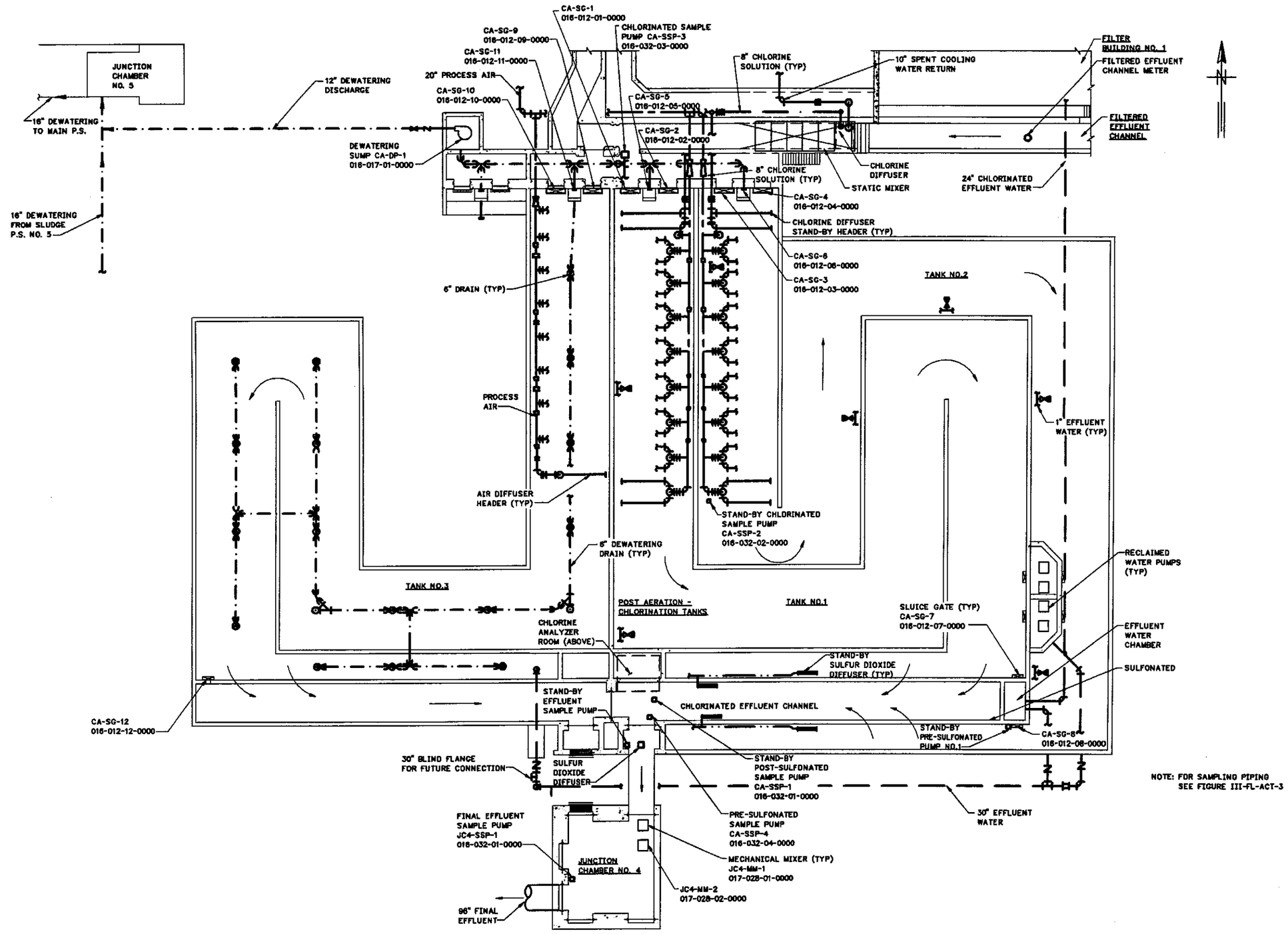

FIGURE III-FL-ACT-1 POST AERATION-CHLORINATION TANKS SCHEMATIC

GREELEY AND HANSEN ENGINEERS

FIGURE III-FL-ACT-1
POST AERATION-CHLORINATION TANKS SCHEMATIC

FILE: FL-ACT-1 1:1 03/02/99 16:10 GH-E

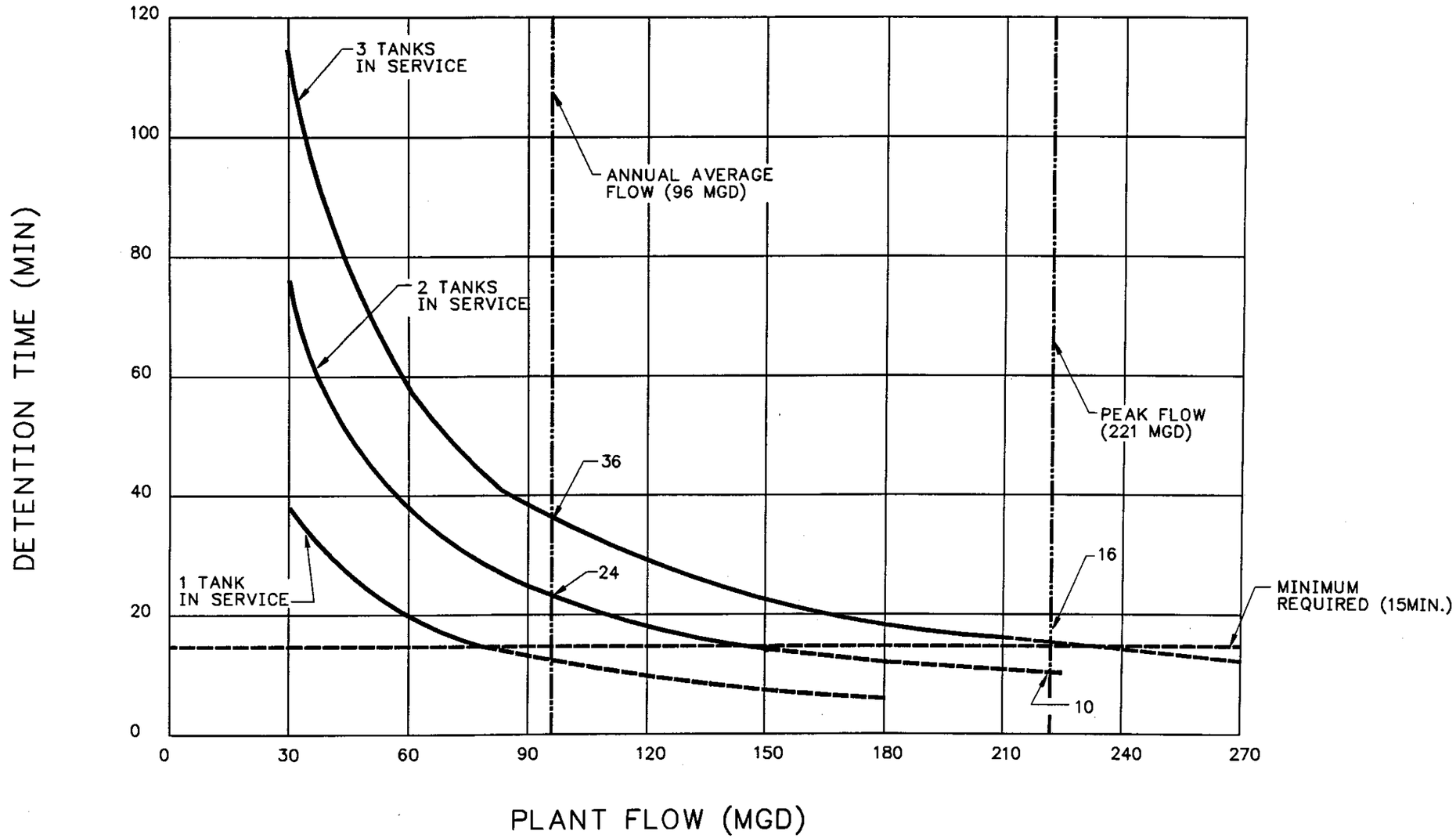

FIGURE III-FL-ACT-2 POST AERATION-CHLORINATION TANKS DETENTION TIME CURVES

FILE: FL-ACT-2 1:1 03/02/99 16:15 GH-E

GREELEY AND HANSEN
ENGINEERS

FIGURE III-FL-ACT-2
POST AERATION-CHLORINATION
TANKS DETENTION TIME CURVES

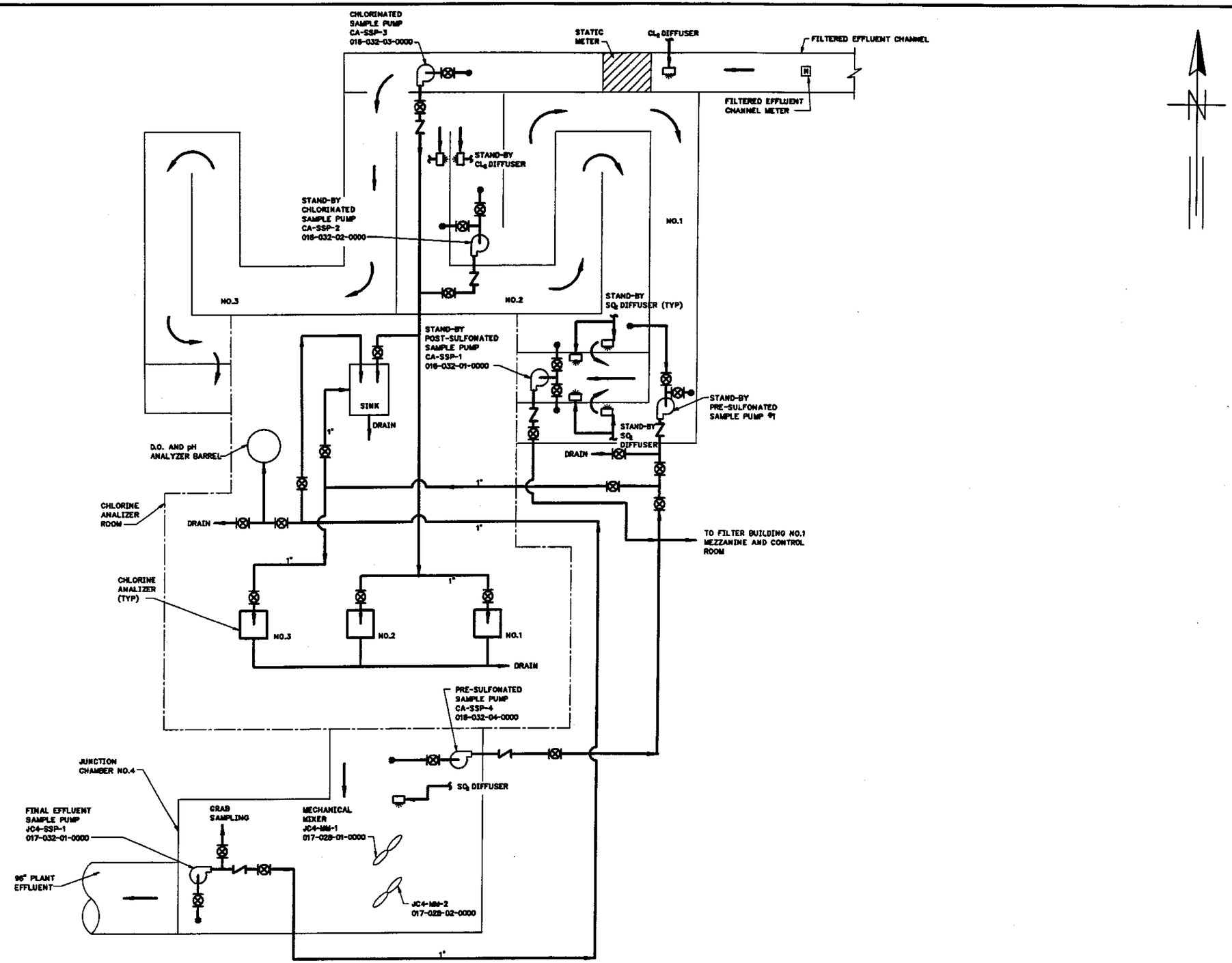

FIGURE III-FL-ACT-3 SAMPLE PUMP PIPING SCHEMATIC

GREELEY AND HANSEN ENGINEERS

FILE: FL-ACT-3 1:1 03/02/99 16:18 GH-E

FIGURE III-FL-ACT-3
SAMPLE PUMP
PIPING SCHEMATIC

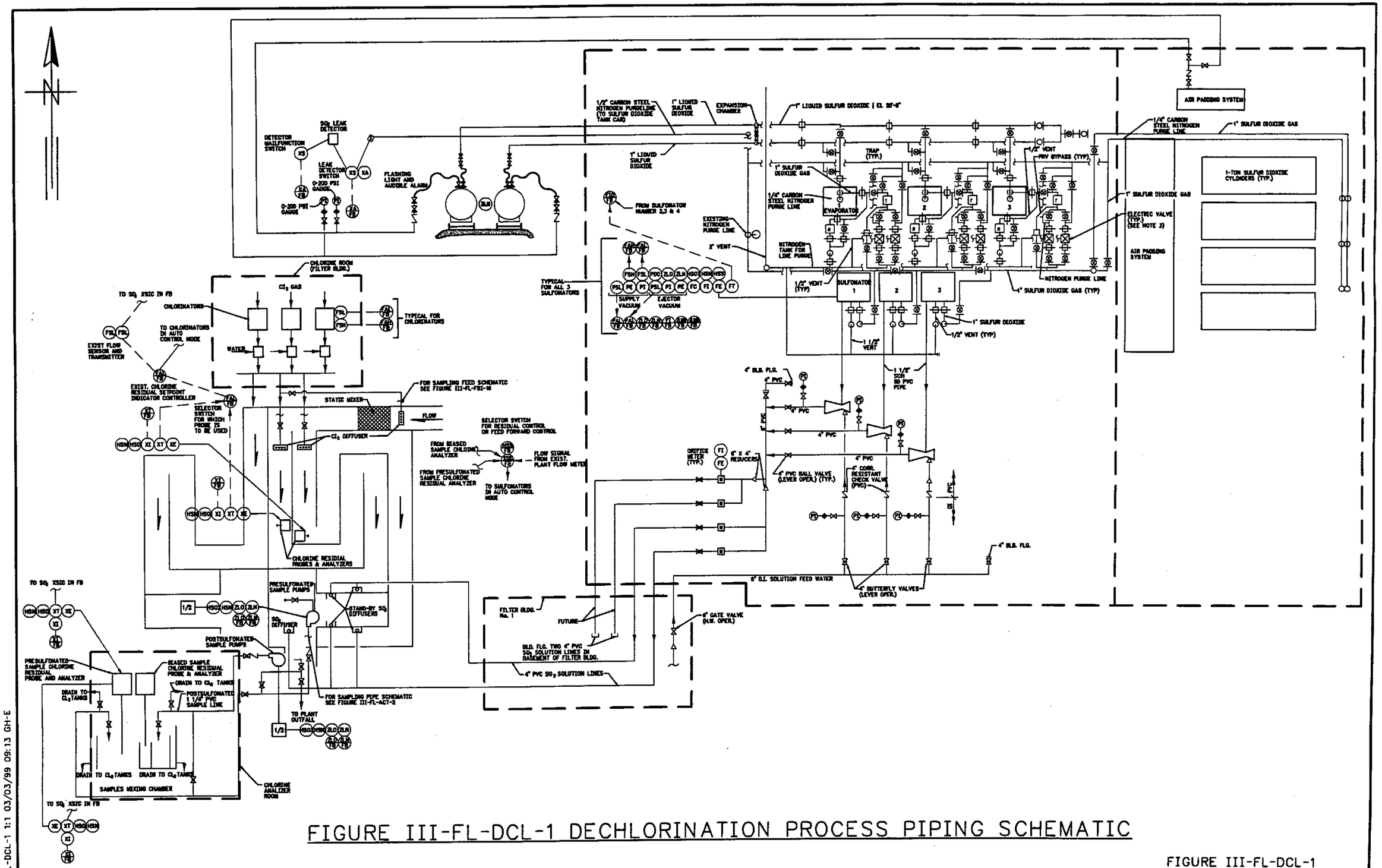

FIGURE III-FL-DCL-1 DECHLORINATION PROCESS PIPING SCHEMATIC

GREELEY AND HANSEN ENGINEERS
FALLER, DAVIS & ASSOCIATES

FIGURE III-FL-DCL-1
DECHLORINATION PROCESS
PIPING SCHEMATIC

FILE: FL-DCL-1 1:1 03/03/99 09:13 GH-E

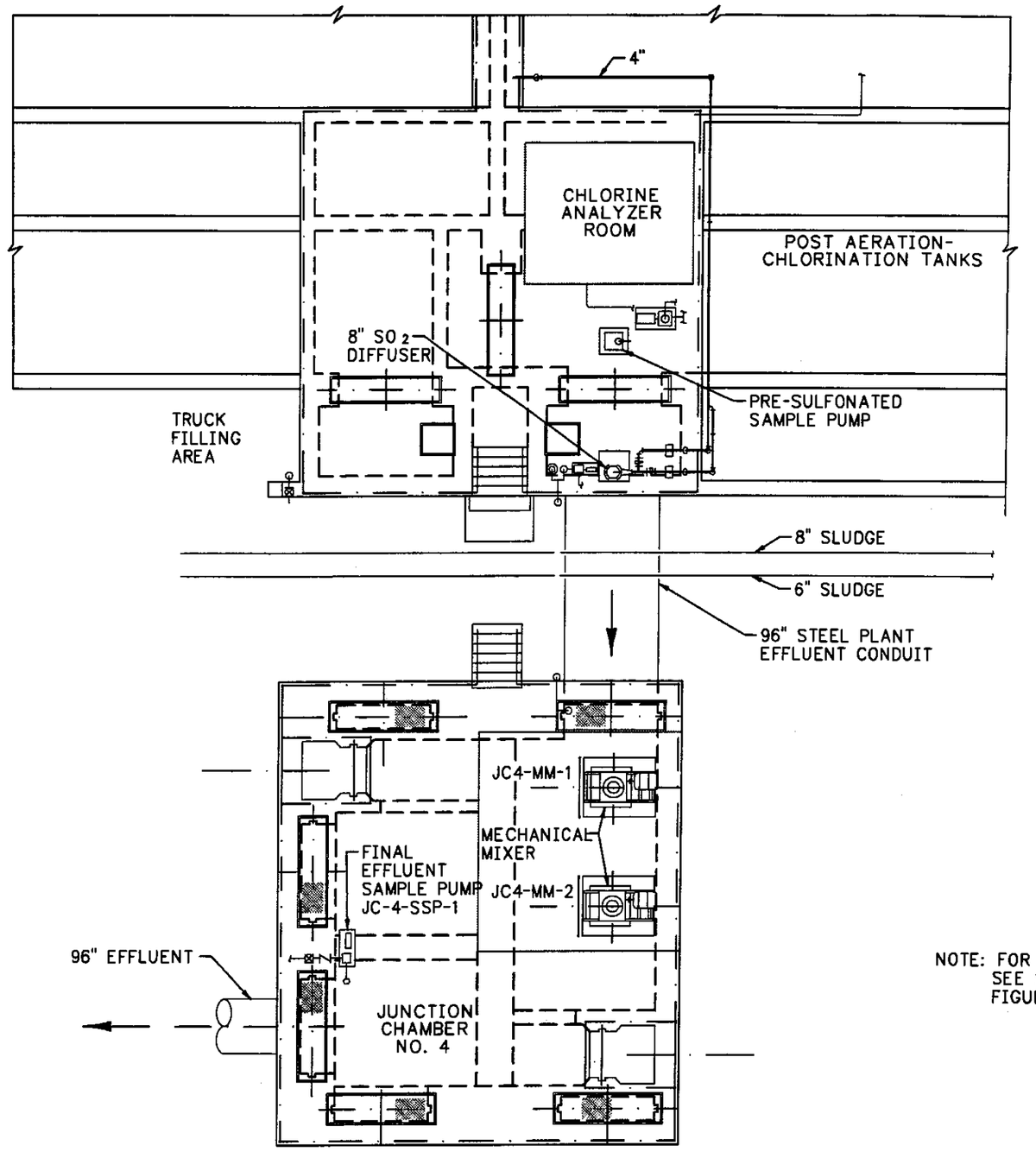

NOTE: FOR SAMPLING PIPING SEE SCHEMATIC IN FIGURE III-FL-ACT-2

FIGURE III-FL-DCL-2 EFFLUENT SAMPLING EQUIPMENT

GREELEY AND HANSEN ENGINEERS
FALLER, DAVIS & ASSOCIATES

FIGURE III-FL-DCL-2
EFFLUENT SAMPLING
EQUIPMENT

FILE: FL-DCL-2 1:1 03/03/99 09:22 GH-E

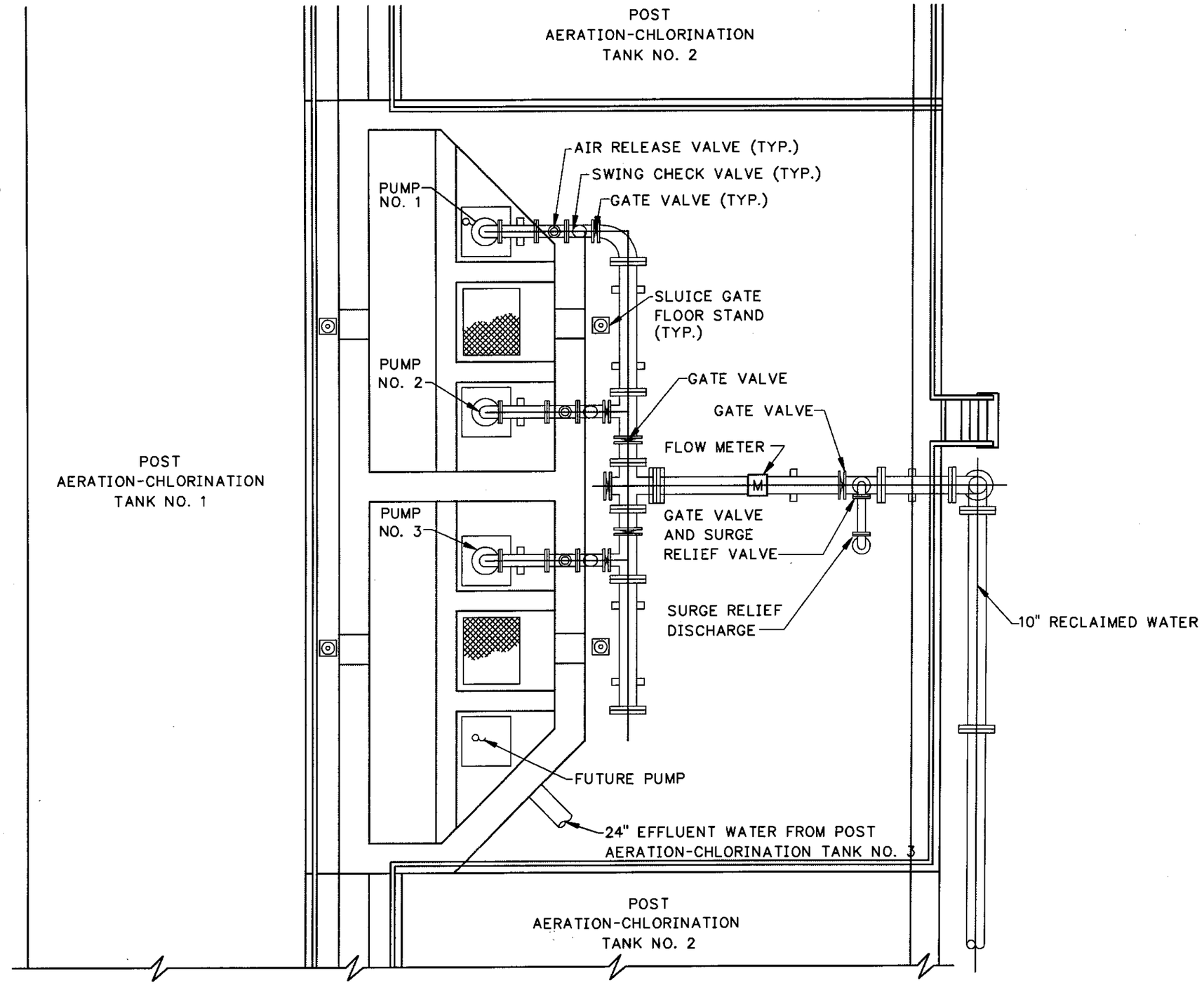

FIGURE III-FL-RWP-1 RECLAIMED WATER PUMPING STATION

GREELEY AND HANSEN ENGINEERS
FALLER, DAVIS & ASSOCIATES

FIGURE III-FL-RWP-1
RECLAIMED WATER
PUMPING STATION

FILE: FL-RWP-1 1:1 03/04/99 10:05 GH-E

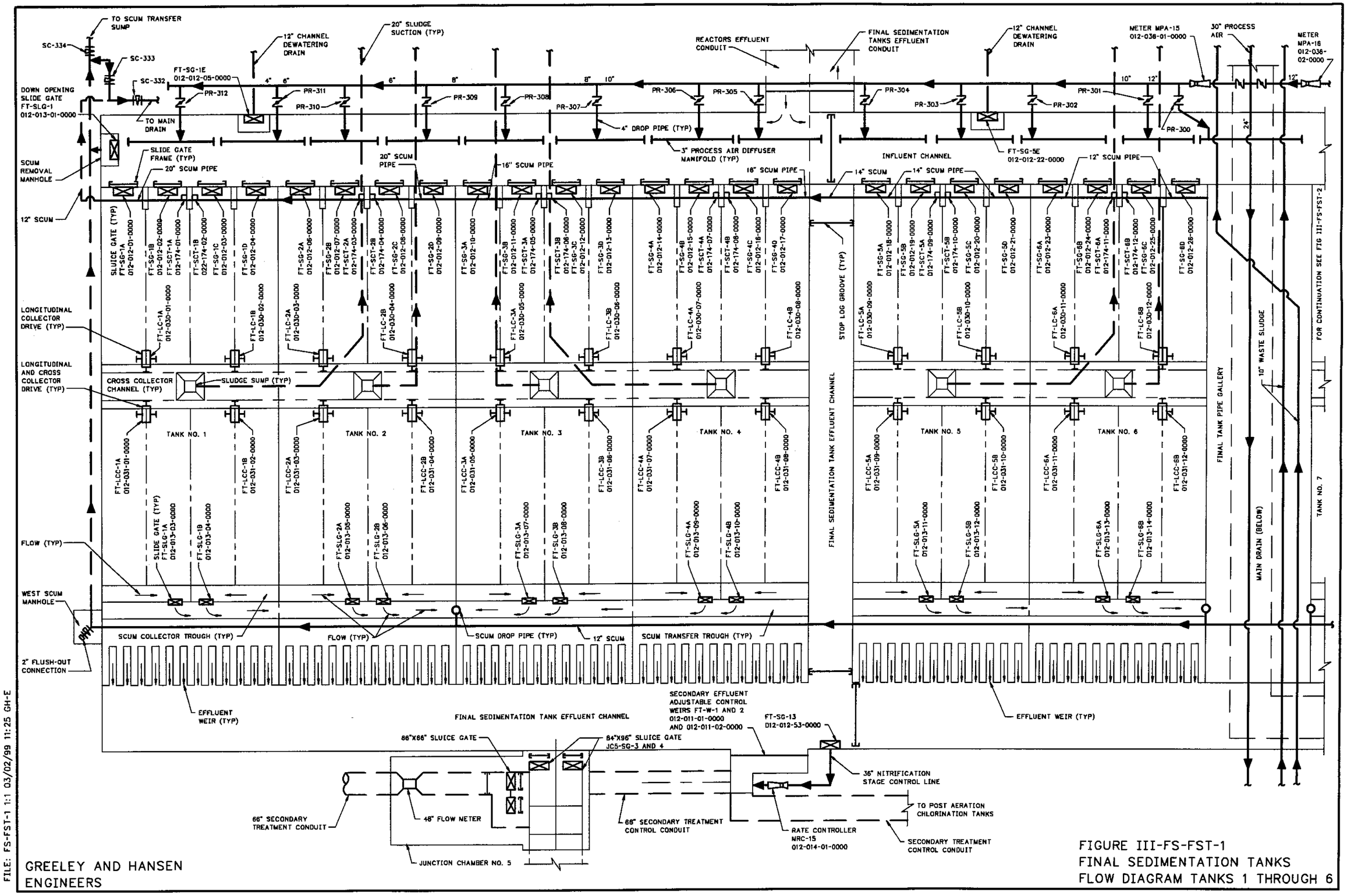

GREELEY AND HANSEN ENGINEERS

FIGURE III-FS-FST-1
FINAL SEDIMENTATION TANKS
FLOW DIAGRAM TANKS 1 THROUGH 6

FILE: FS-FST-1 1:1 03/02/99 11:25 GH-E

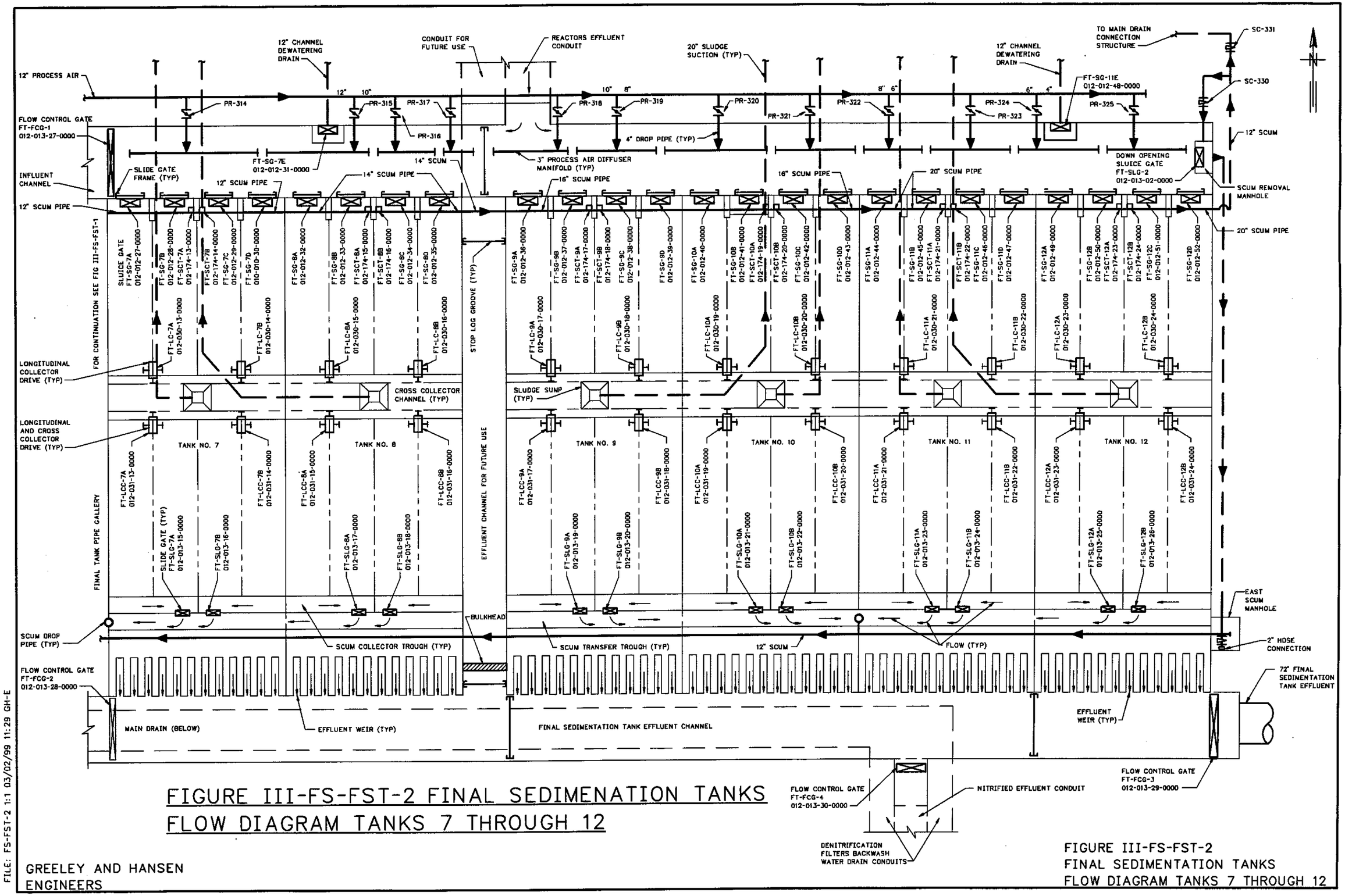

FIGURE III-FS-FST-2 FINAL SEDIMENATION TANKS
FLOW DIAGRAM TANKS 7 THROUGH 12

GREELEY AND HANSEN
ENGINEERS

FIGURE III-FS-FST-2
FINAL SEDIMENTATION TANKS
FLOW DIAGRAM TANKS 7 THROUGH 12

FILE: FS-FST-2 1:1 03/02/99 11:29 GH-E

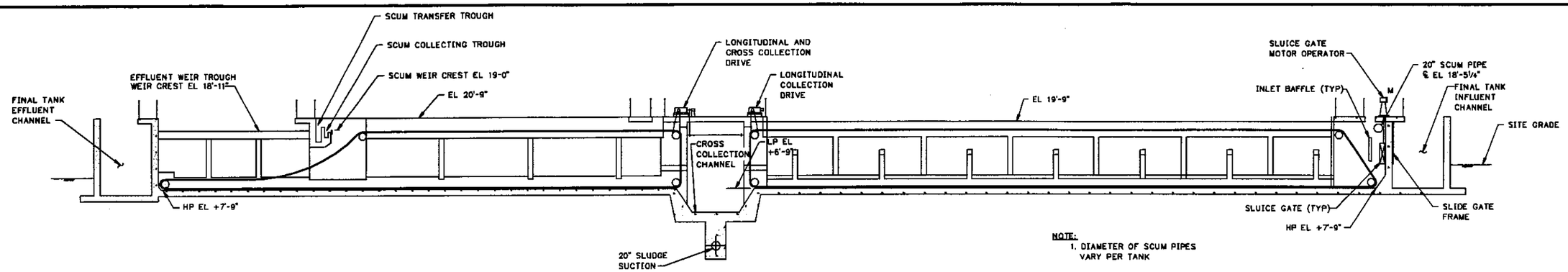

NOTE:
1. DIAMETER OF SCUM PIPES VARY PER TANK

TYPICAL LONITUDINAL TANK SECTION

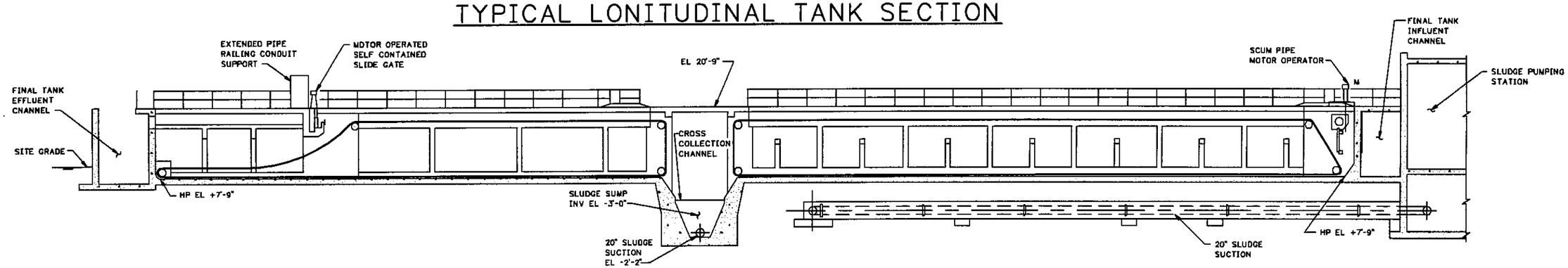

TYPICAL LONITUDINAL TANK SECTION AT SLUDGE SUMP

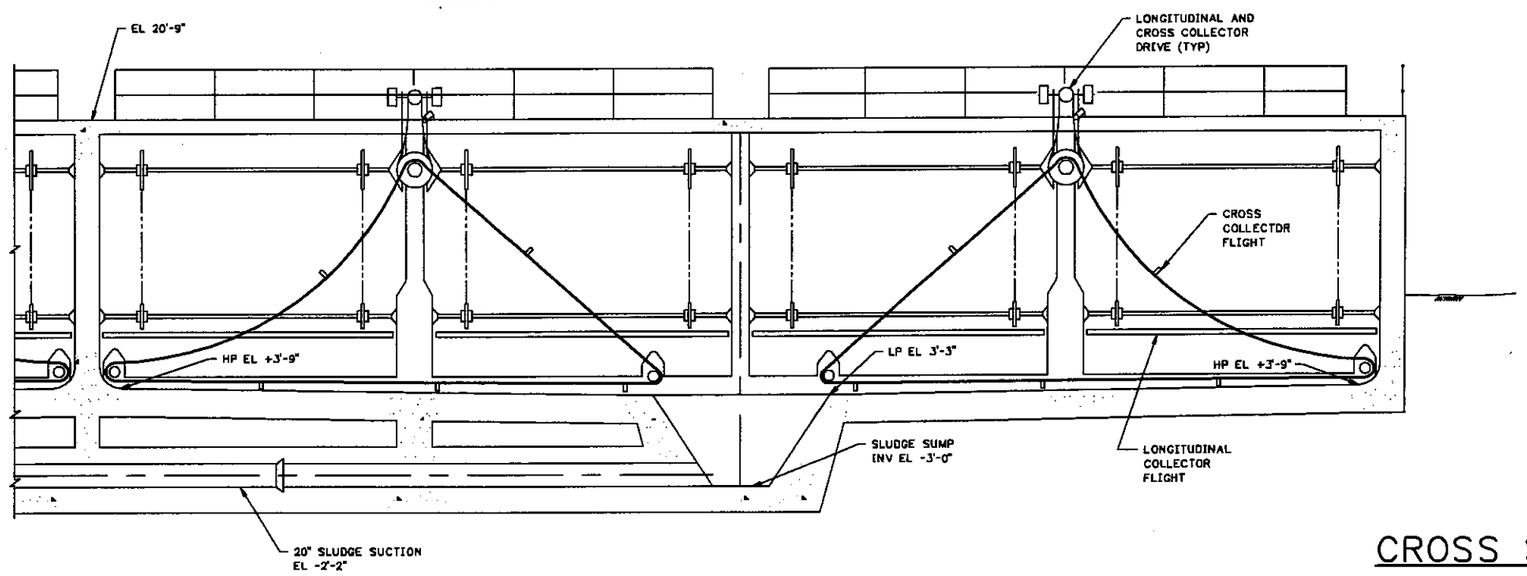

LONITUDINAL SECTION OF CROSS COLLECTOR CHANNEL

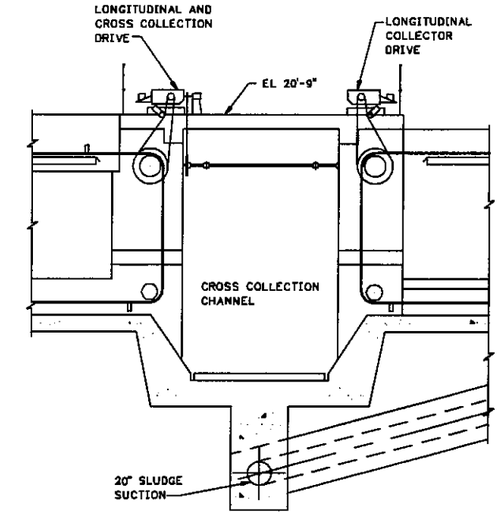

CROSS SECTION OF COLLECTOR CHANNEL

FILE: FS-FST-3 1:1 03/02/99 13:16 GH-E

GREELEY AND HANSEN
ENGINEERS

FIGURE III-FS-FST-3
FINAL SEDIMENTATION
TANKS 1-12 SECTIONS

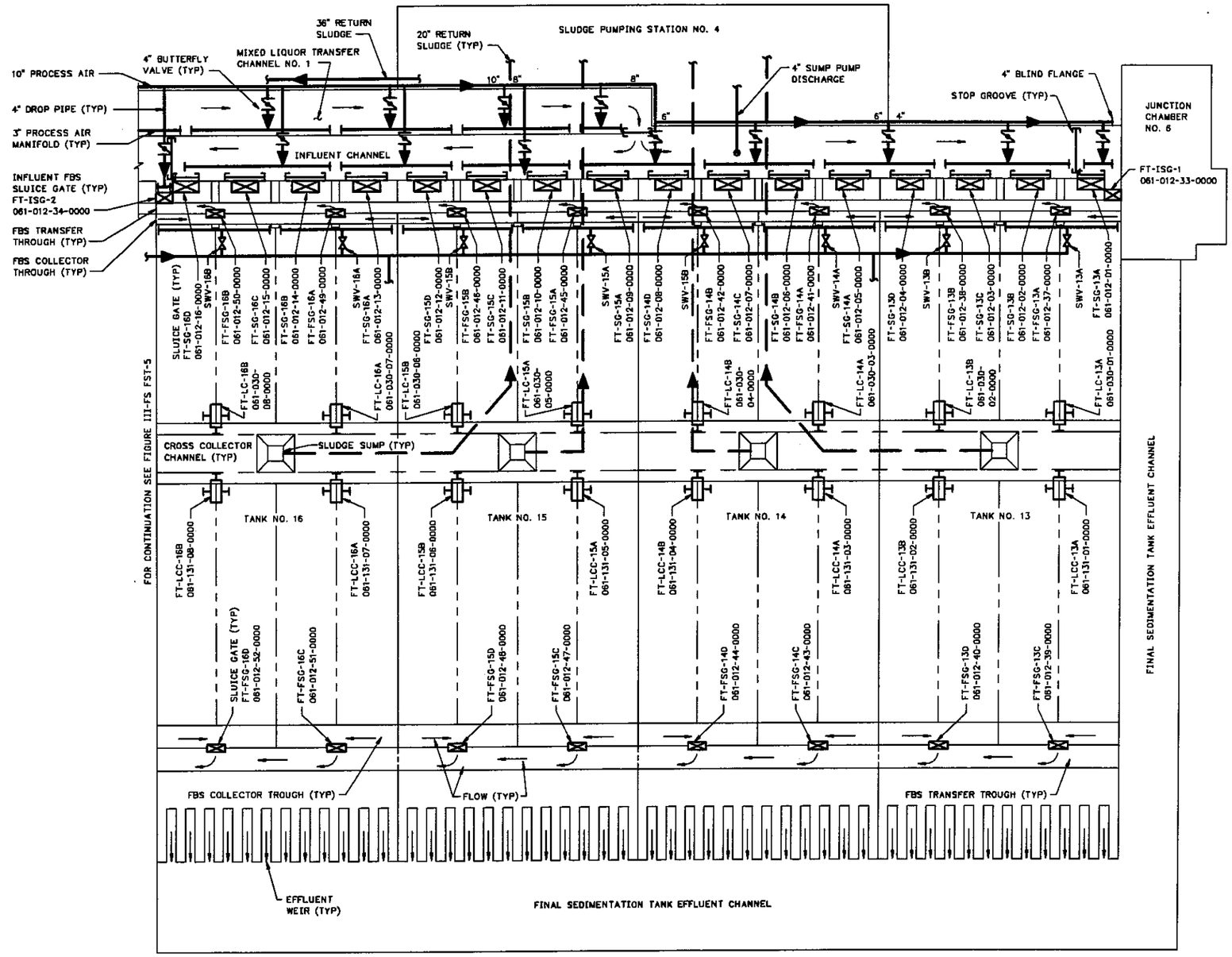

FIGURE III-FS-FST-4 FINAL SEDIMENTATION TANKS FLOW DIAGRAM TANKS 13 THROUGH 16

GREELEY AND HANSEN
ENGINEERS

FIGURE III-FS-FST-4
FINAL SEDIMENTATION TANKS
FLOW DIAGRAM TANKS 13 THROUGH 16

FILE: FS-FST-4 1:1 03/02/99 13:27 GH-E

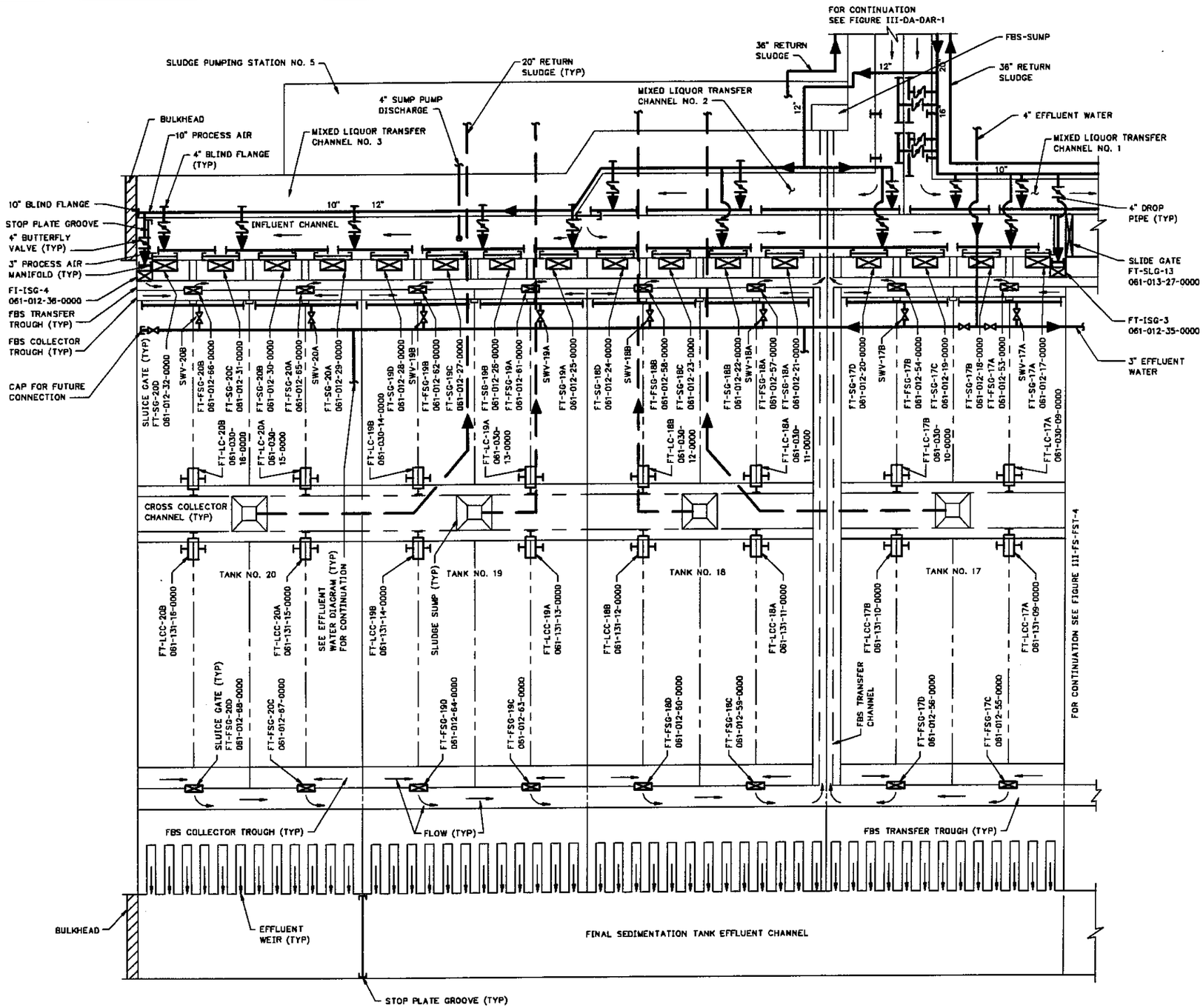

FIGURE III-FS-FST-5 FINAL SEDIMENTATION TANKS FLOW DIAGRAM TANKS 17 THROUGH 20

FILE: FS-FST-5 1:1 03/02/99 13:31 GH-E

GREELEY AND HANSEN ENGINEERS

FIGURE III-FS-FST-5
FINAL SEDIMENTATION TANKS
FLOW DIAGRAM TANKS 17 THROUGH 20

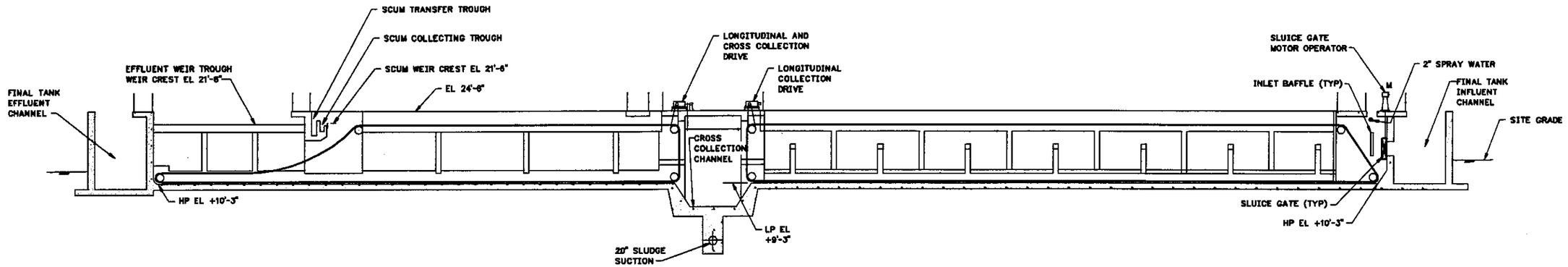

TYPICAL LONGITUDINAL TANK SECTION

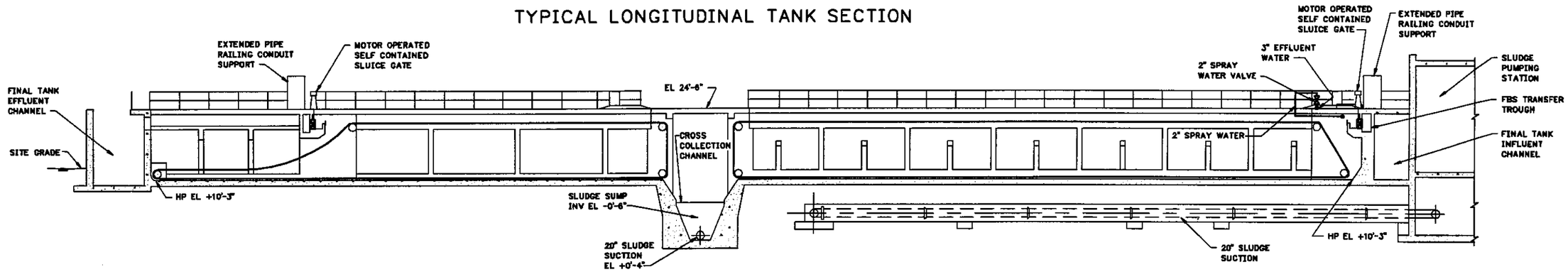

TYPICAL LONGITUDINAL TANK SECTION AT SLUDGE SUMP

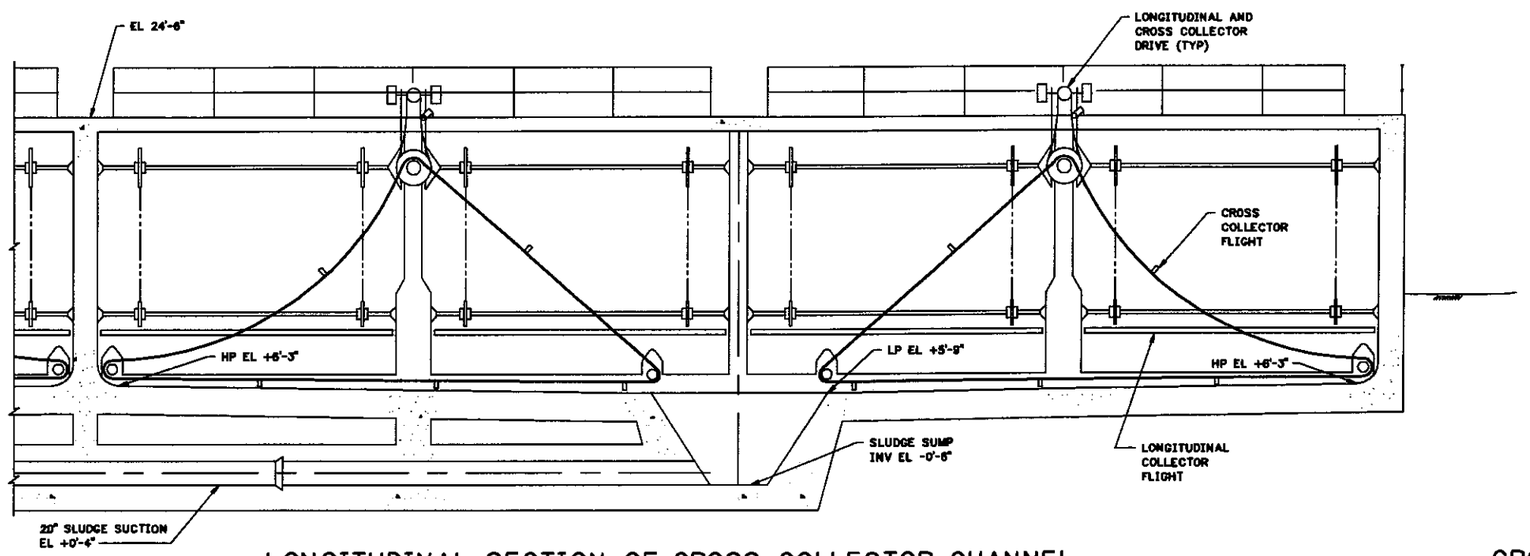

LONGITUDINAL SECTION OF CROSS COLLECTOR CHANNEL

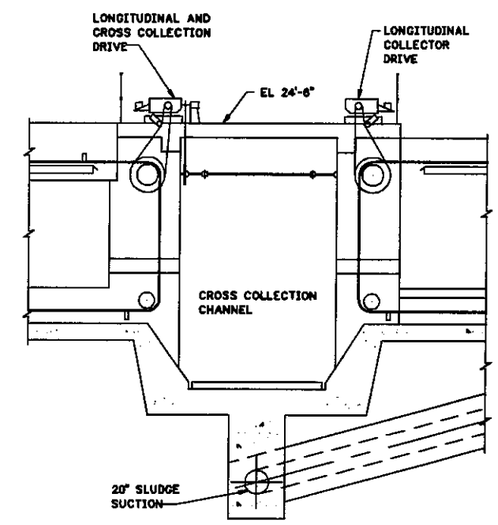

CROSS SECTION OF CROSS COLLECTOR CHANNEL

FILE: FS-FST-6 1:1 03/02/99 13:34 GH-E

GREELEY AND HANSEN
ENGINEERS

FIGURE III-FS-FST-6
FINAL SEDIMENTATION
TANKS 13-20 SECTIONS

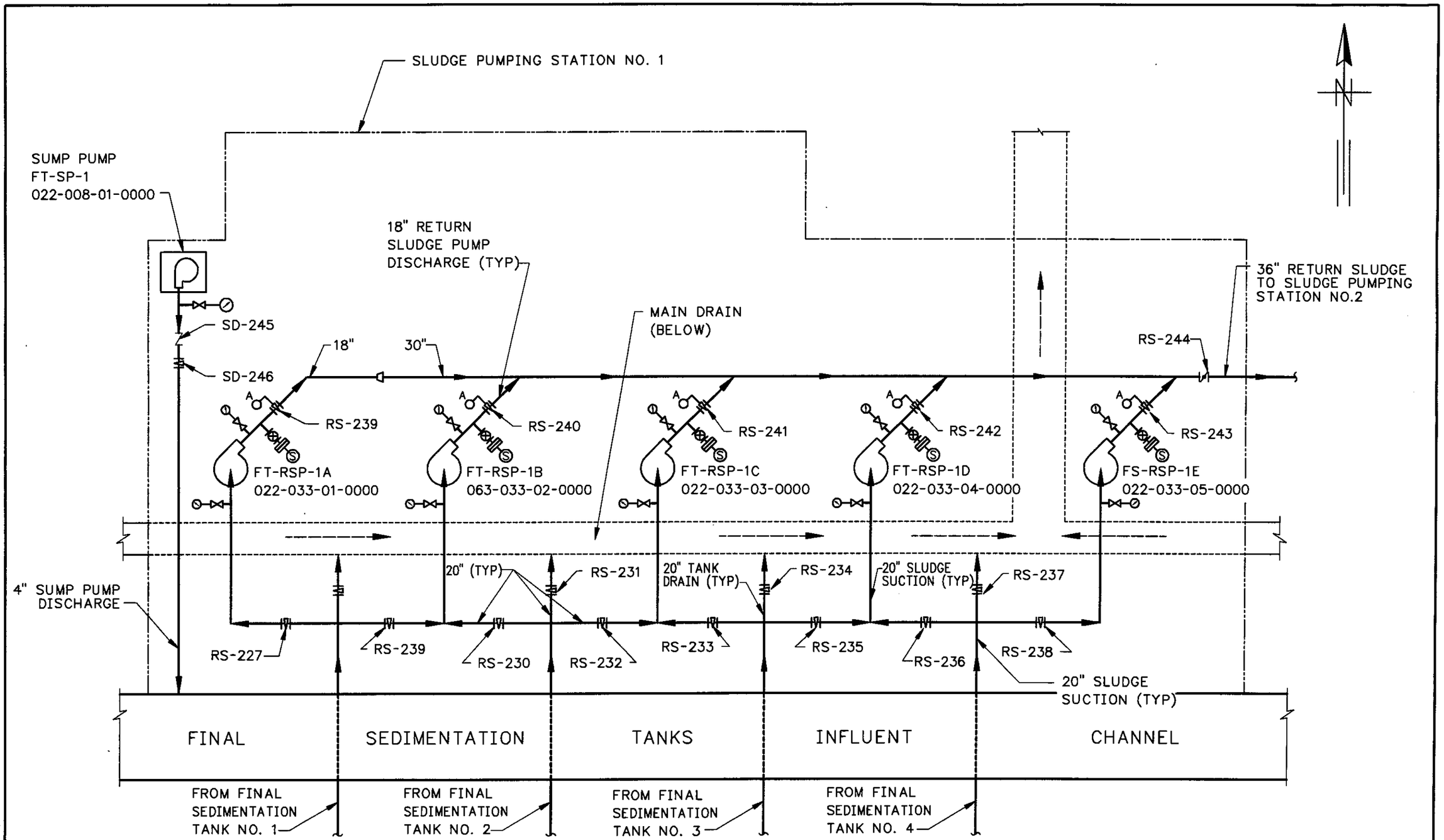

FIGURE III-FS-SPS-1 RETURN SLUDGE PUMPING STATION NO. 1 FLOW DIAGRAM

FILE: FS-SP-1 1:1 03/02/99 13:39 GH-E

GREELEY AND HANSEN
ENGINEERS

FIGURE III-FS-SPS-1
RETURN SLUDGE PUMPING
STATION NO. 1 FLOW DIAGRAM

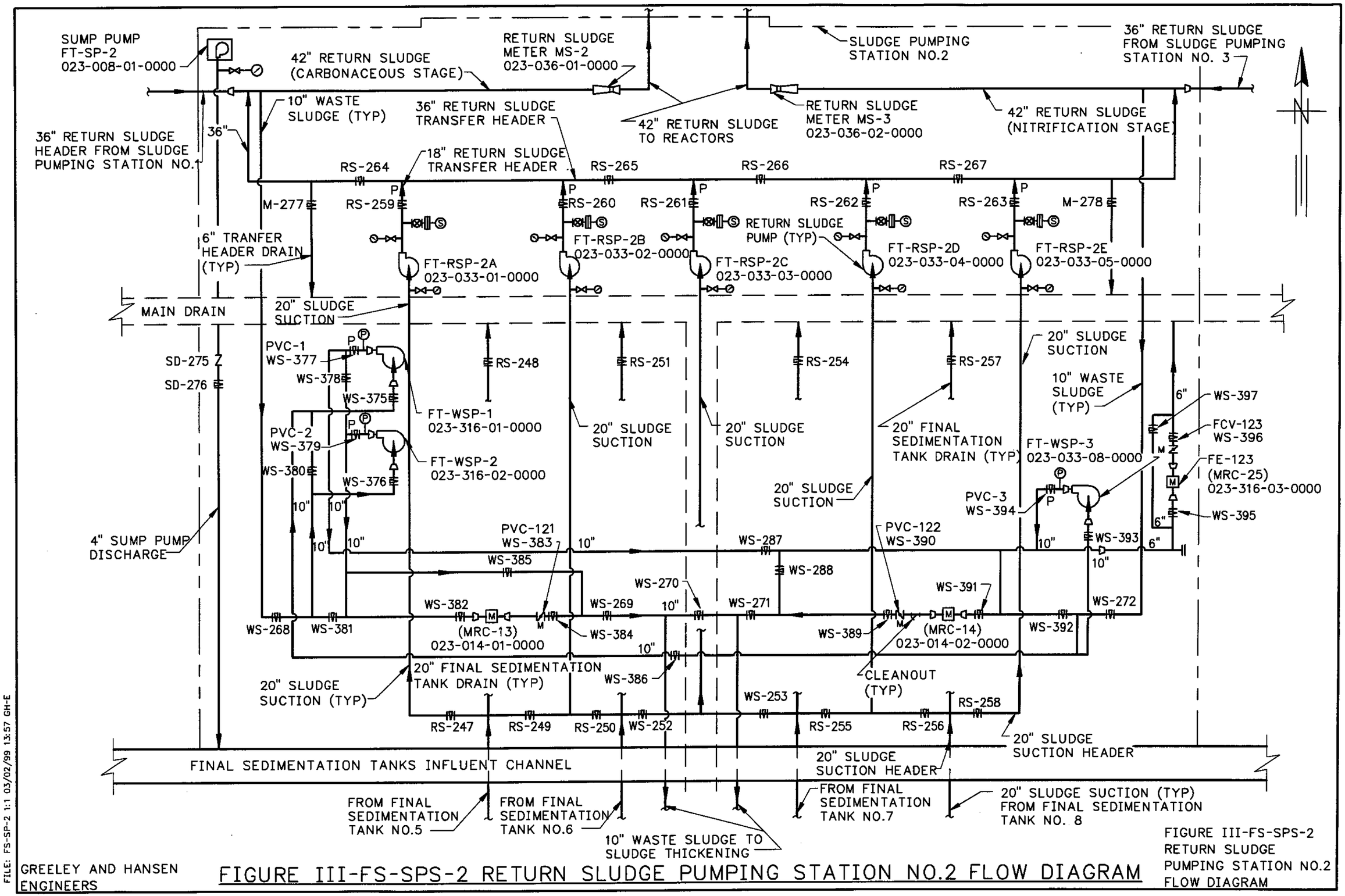

FIGURE III-FS-SPS-2 RETURN SLUDGE PUMPING STATION NO.2 FLOW DIAGRAM

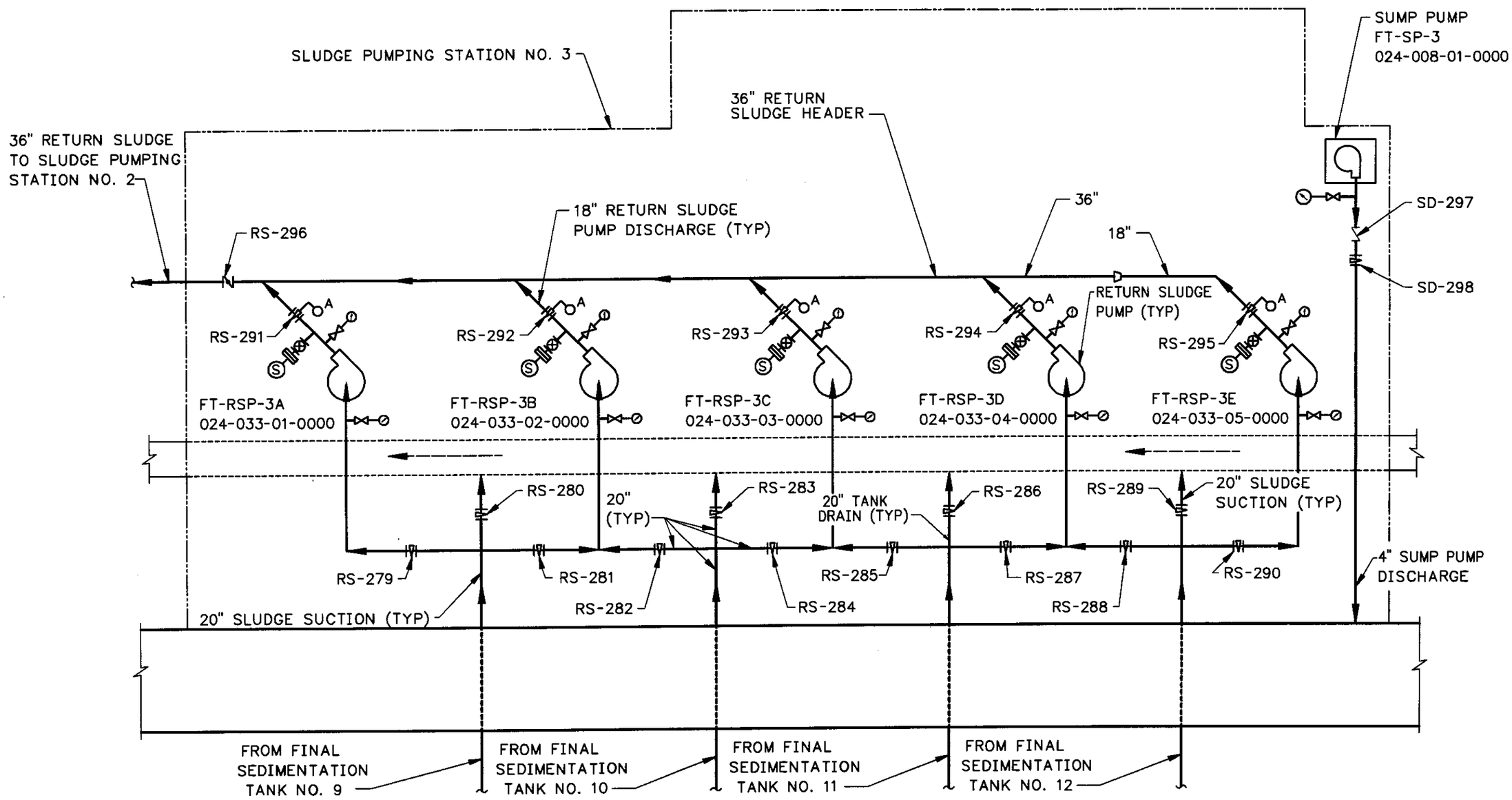

FIGURE III-FS-SPS-3 RETURN PUMPING STATION NO. 3 FLOW DIAGRAM

FILE: FS-SP-3 1:1 03/02/99 14:03 GH-E

GREELEY AND HANSEN ENGINEERS

FIGURE III-FS-SPS-3
RETURN SLUDGE PUMPING
STATION NO.3 FLOW DIAGRAM

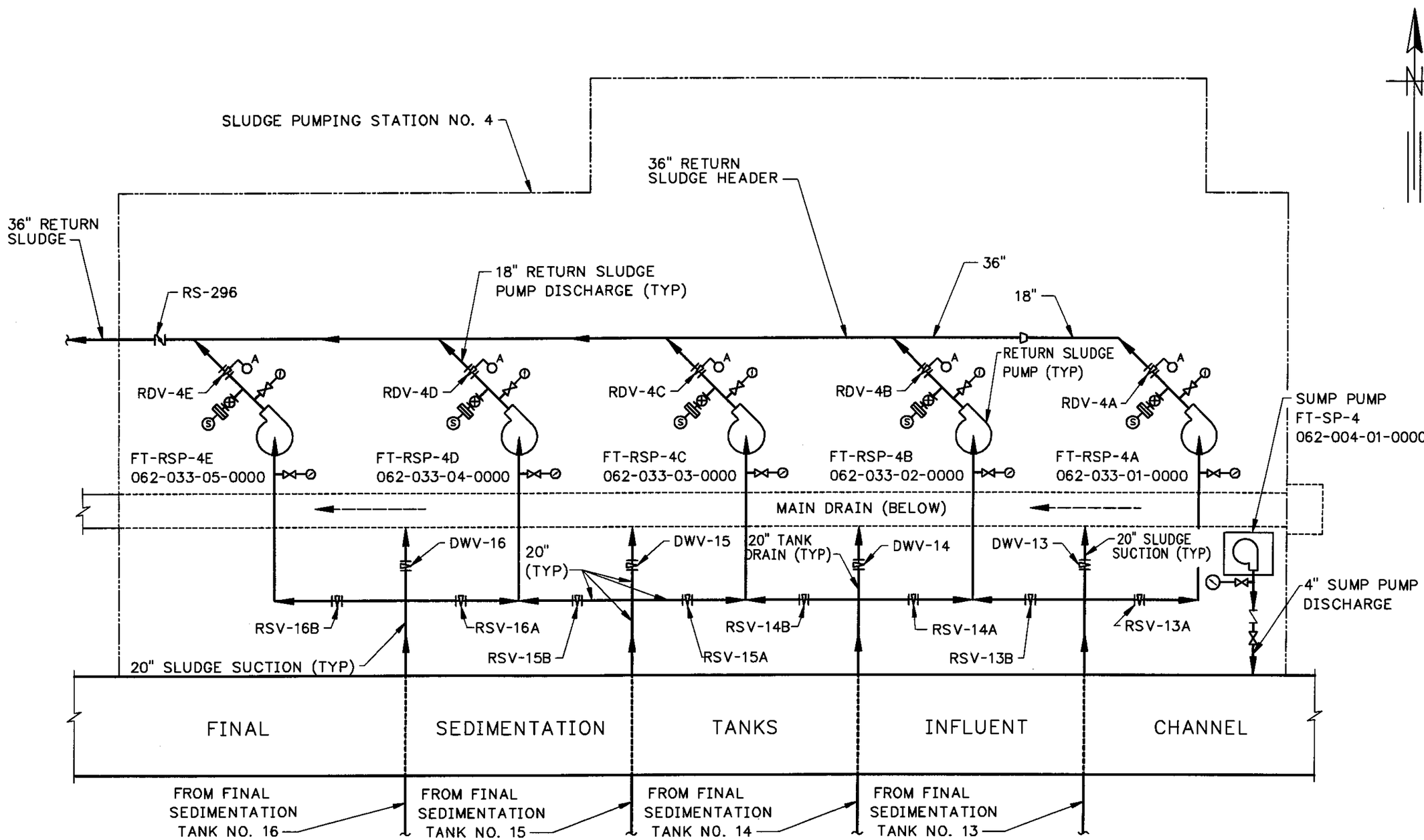

FIGURE III-FS-SPS-4 RETURN SLUDGE PUMPING STATION NO. 4 FLOW DIAGRAM

FILE: FS-SP-4 1:1 03/02/99 14:05 GH-E

GREELEY AND HANSEN ENGINEERS

FIGURE III-FS-SPS-4
RETURN SLUDGE PUMPING
STATION NO. 4 FLOW DIAGRAM

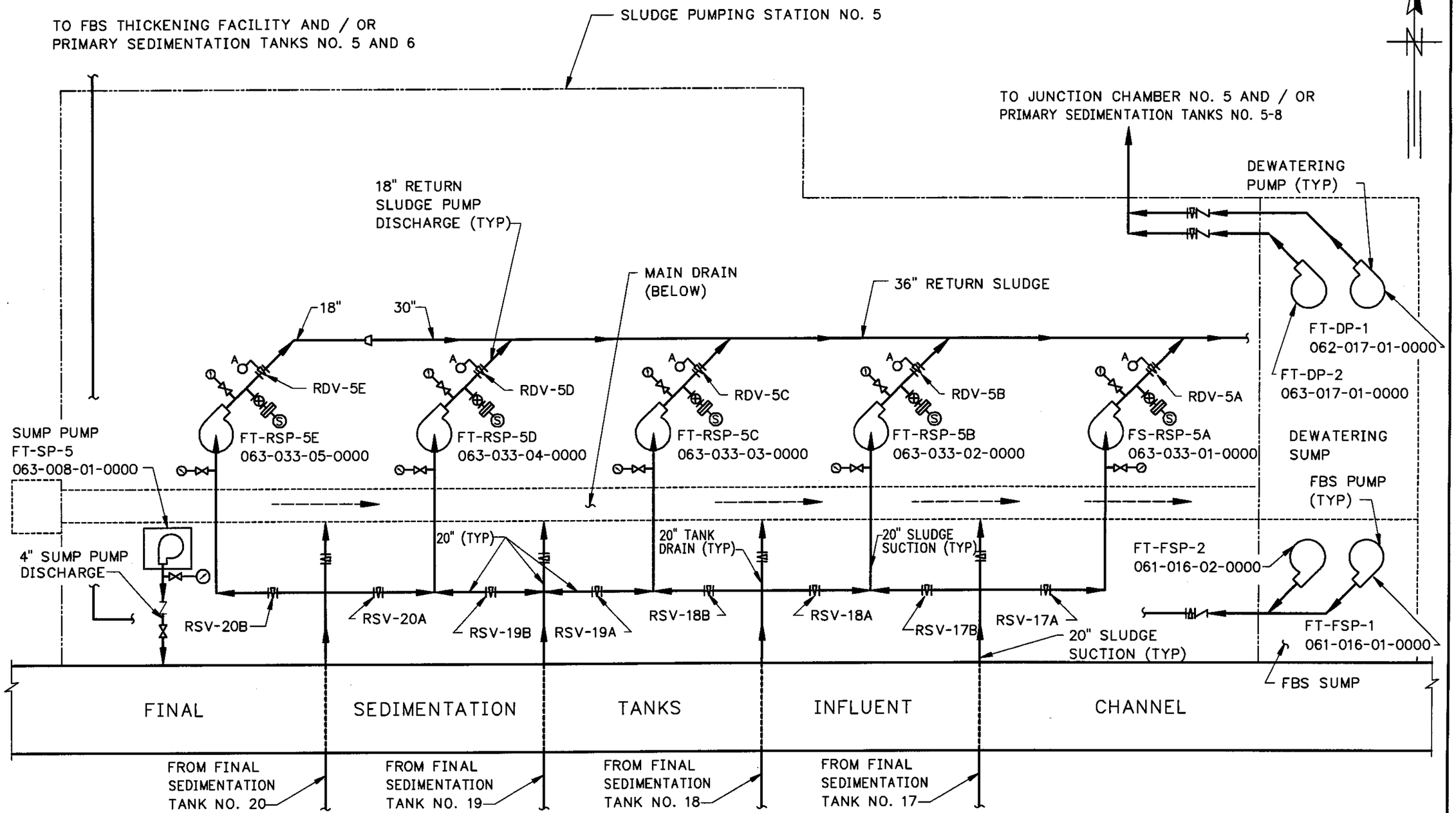

FIGURE III-FS-SPS-5 RETURN SLUDGE PUMPING STATION NO. 5 FLOW DIAGRAM

FILE: FS-SP-5 1:1 03/02/99 14:10 GH-E

GREELEY AND HANSEN
ENGINEERS

FIGURE III-FS-SPS-5
RETURN SLUDGE PUMPING
STATION NO. 5 FLOW DIAGRAM

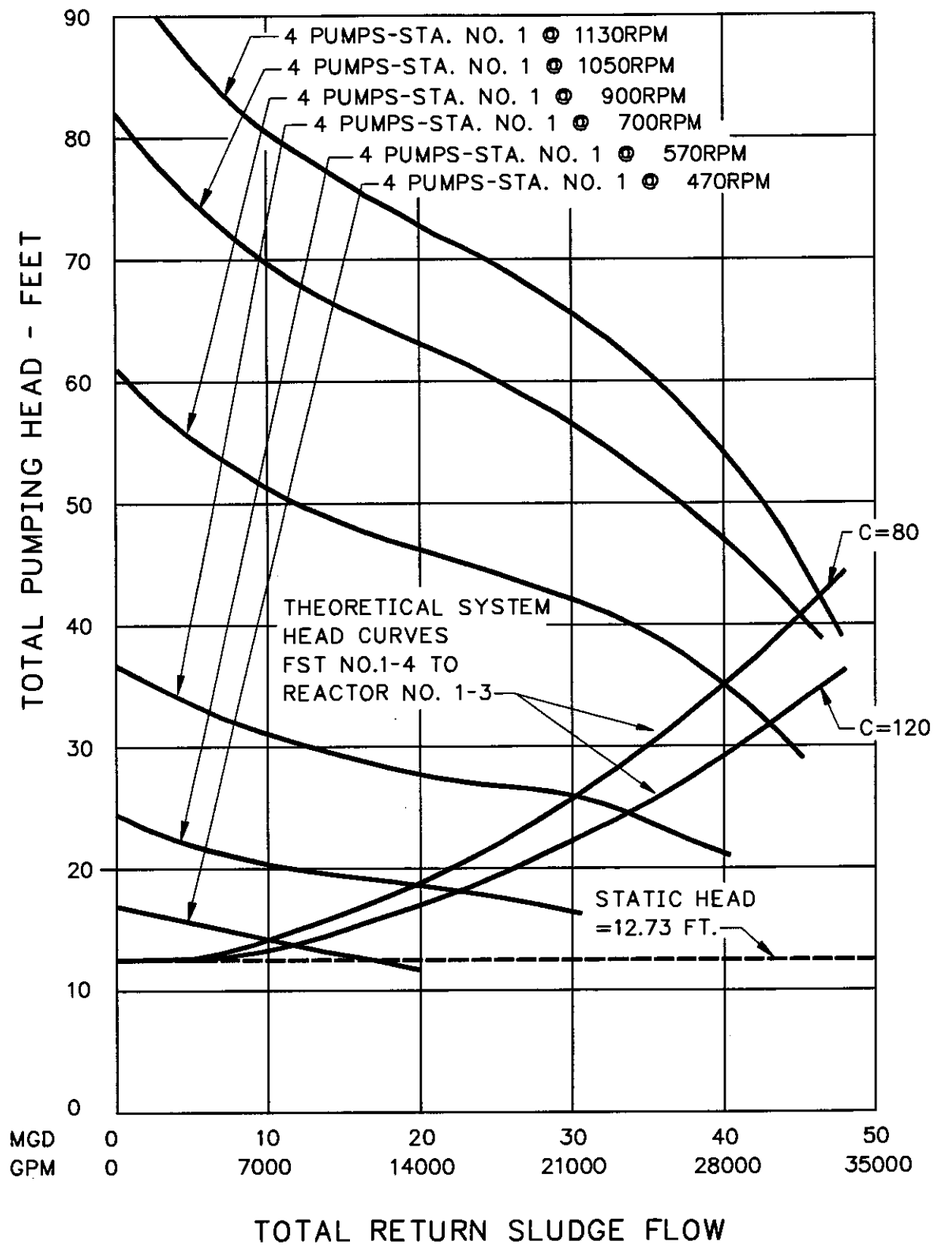

FIGURE III-FS-SPS-6 RETURN SLUDGE PUMP (RSP) DISCHARGE CURVES-SLUDGE PUMPING STATION NO. 1

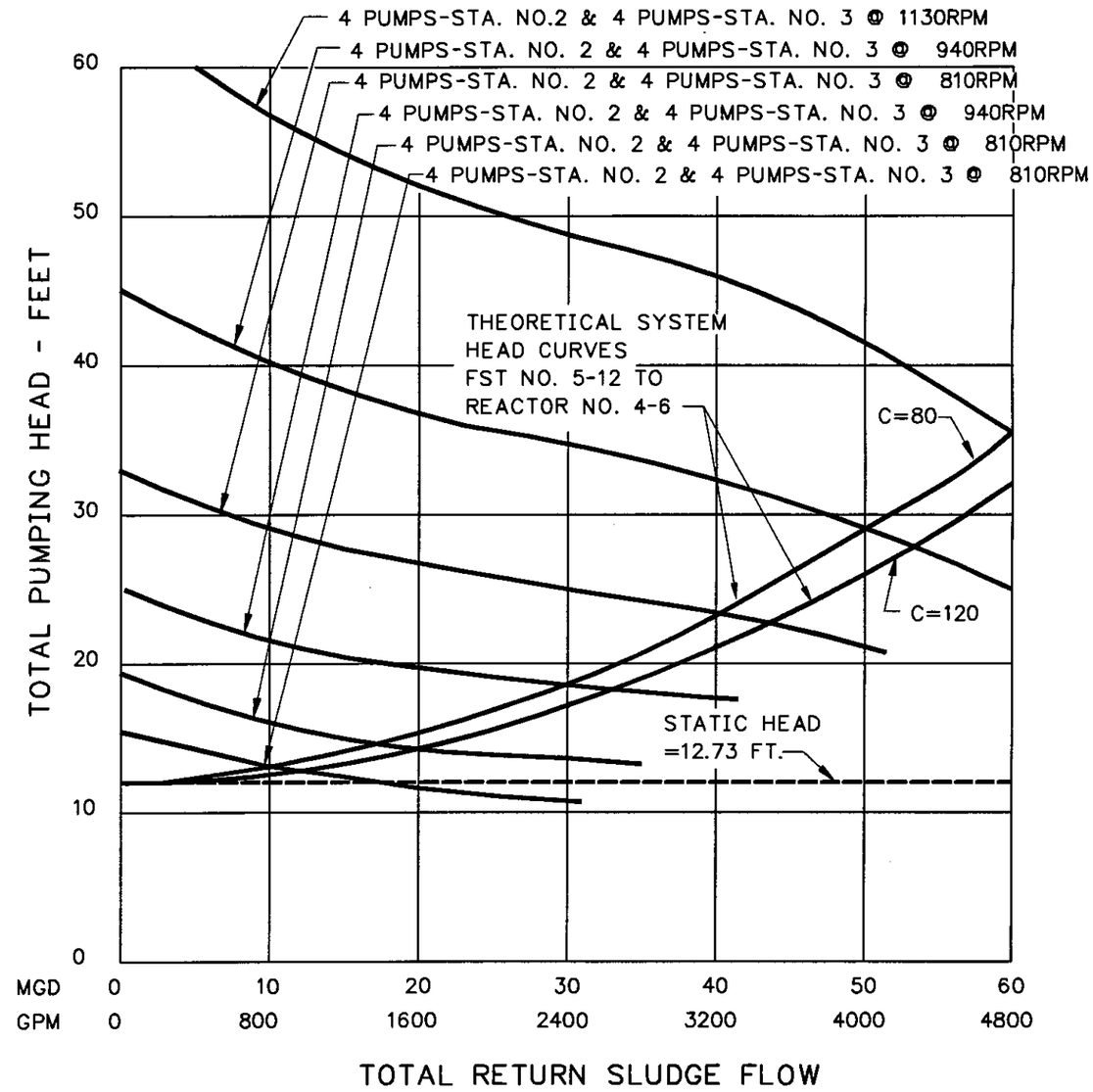

FIGURE III-FS-SPS-7 RETURN SLUDGE PUMP (RSP) DISCHARGE CURVES-SLUDGE PUMPING STATION NOS. 2 AND 3

FIGURE III-FS-SPS-6
RSP DISCHARGE CURVES-
SLUDGE PUMPING STATION NO.1

FIGURE III-FS-SPS-7
RSP DISCHARGE CURVES-
SLUDGE PUMPING STATIONS
NOS. 2 AND 3

GREELEY AND HANSEN
ENGINEERS

FILE: FS-SP-7 1:1 03/02/99 14:15 GH-E

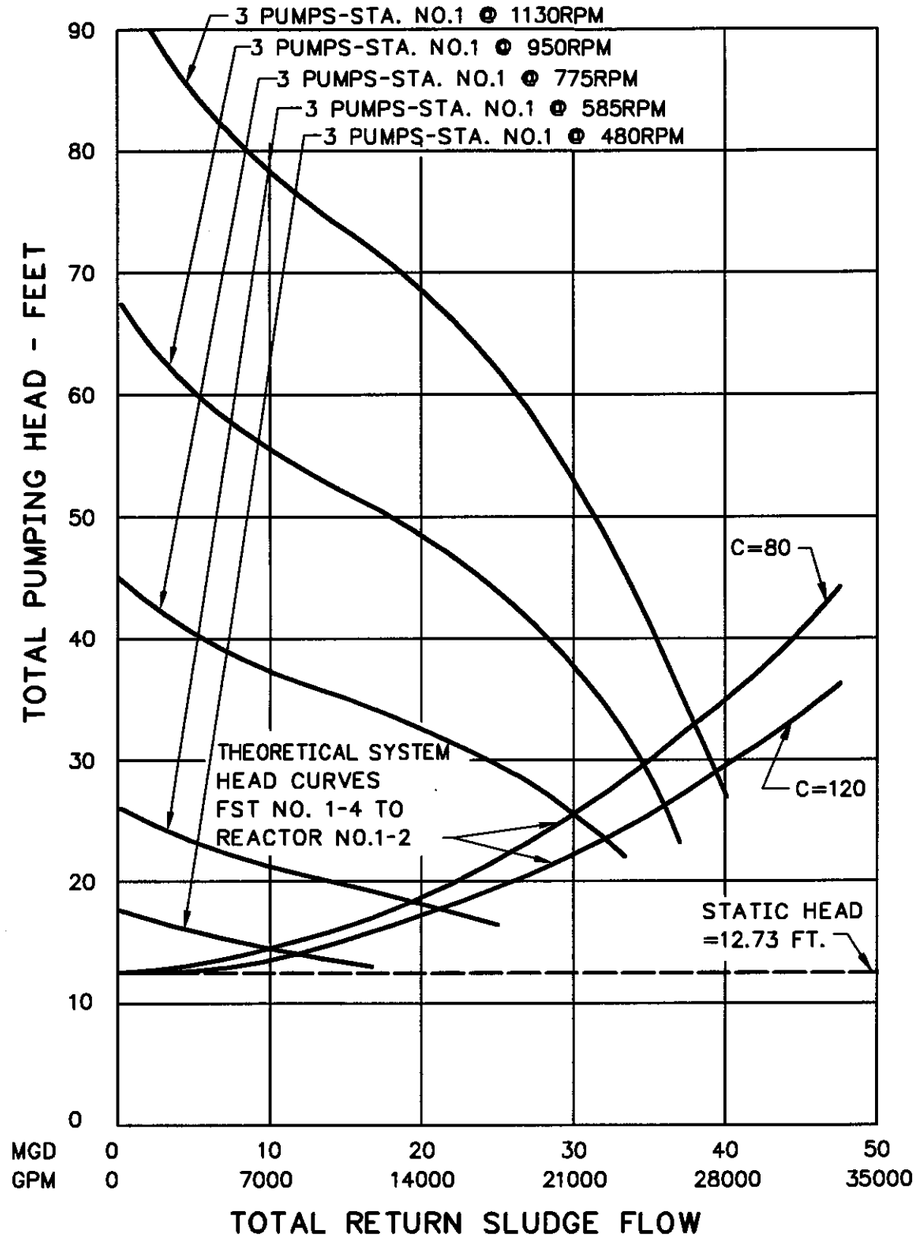

FIGURE III-FS-SPS-8 RETURN SLUDGE PUMP (RSP) DISCHARGE CURVES -SLUDGE PUMPING STATION NO. 1

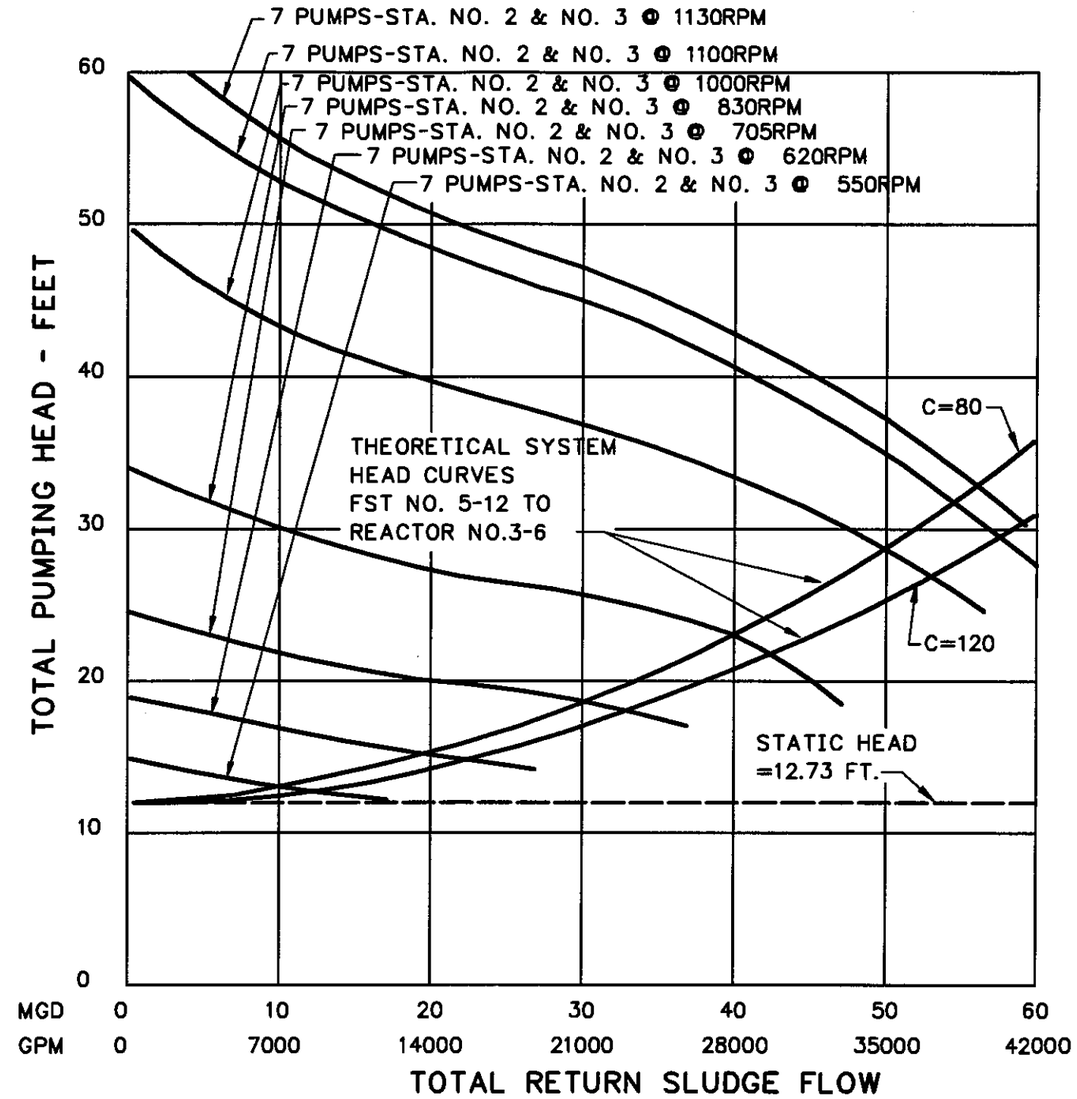

FIGURE III-FS-SPS-9 RETURN SLUDGE PUMP (RSP) DISCHARGE CURVES-SLUDGE PUMPING STATION NOS. 2 AND 3

FIGURE III-FS-SPS-8
RSP DISCHARGE CURVES-
SLUDGE PUMPING STATION
NO.1

FIGURE III-FS-SPS-9
RSP DISCHARGE CURVES-
SLUDGE PUMPING STATIONS
NOS. 2 AND 3

GREELEY AND HANSEN
ENGINEERS

FILE: SF-SPS-9 SCALE: 1:1 02/20, 1997 at 08:48 - s13 c4s

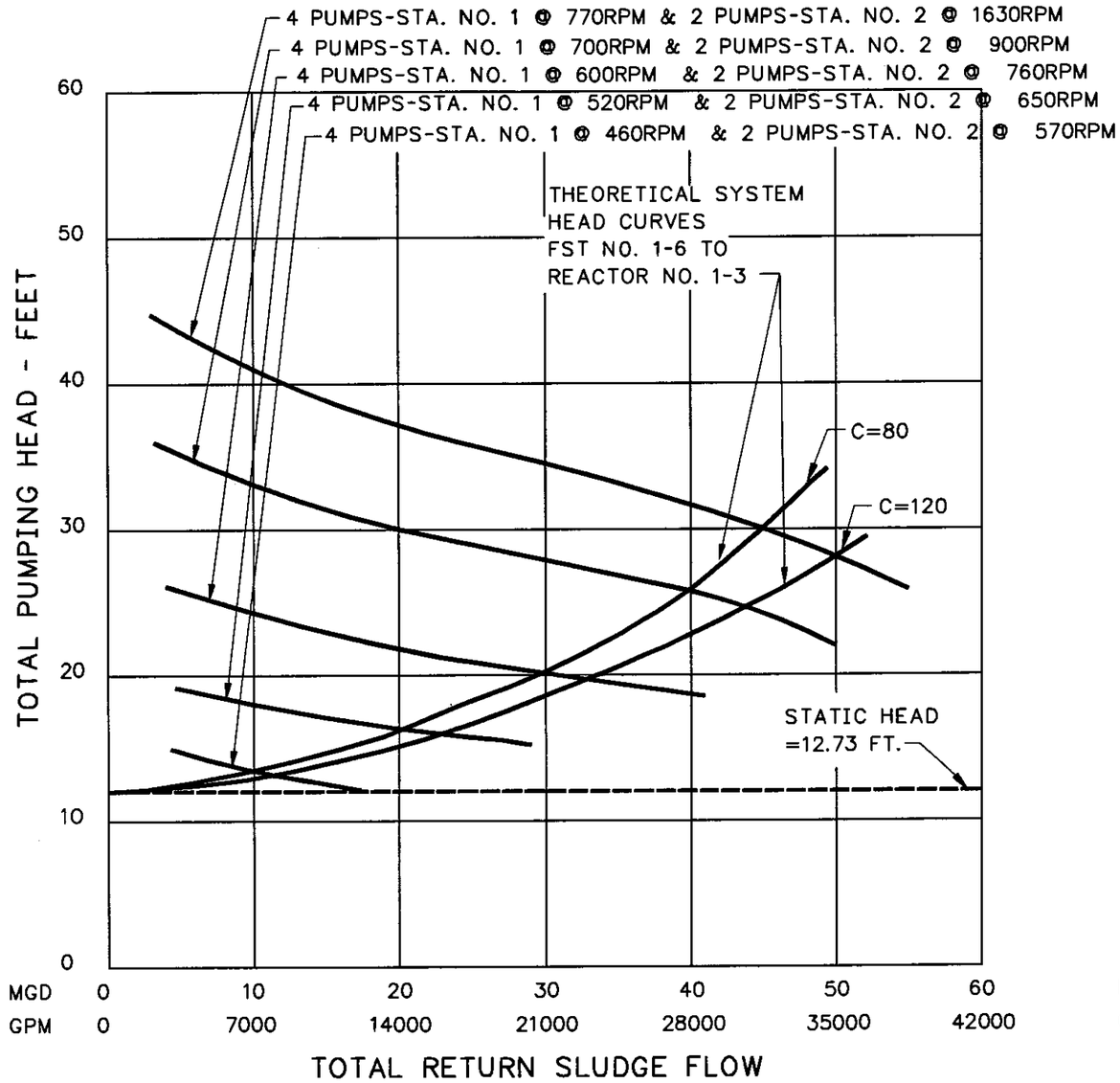

FIGURE III-FS-SPS-10 RETURN SLUDGE PUMP (RSP) DISCHARGE CURVES-SLUDGE PUMPING STATIONS NOS. 1 AND 2

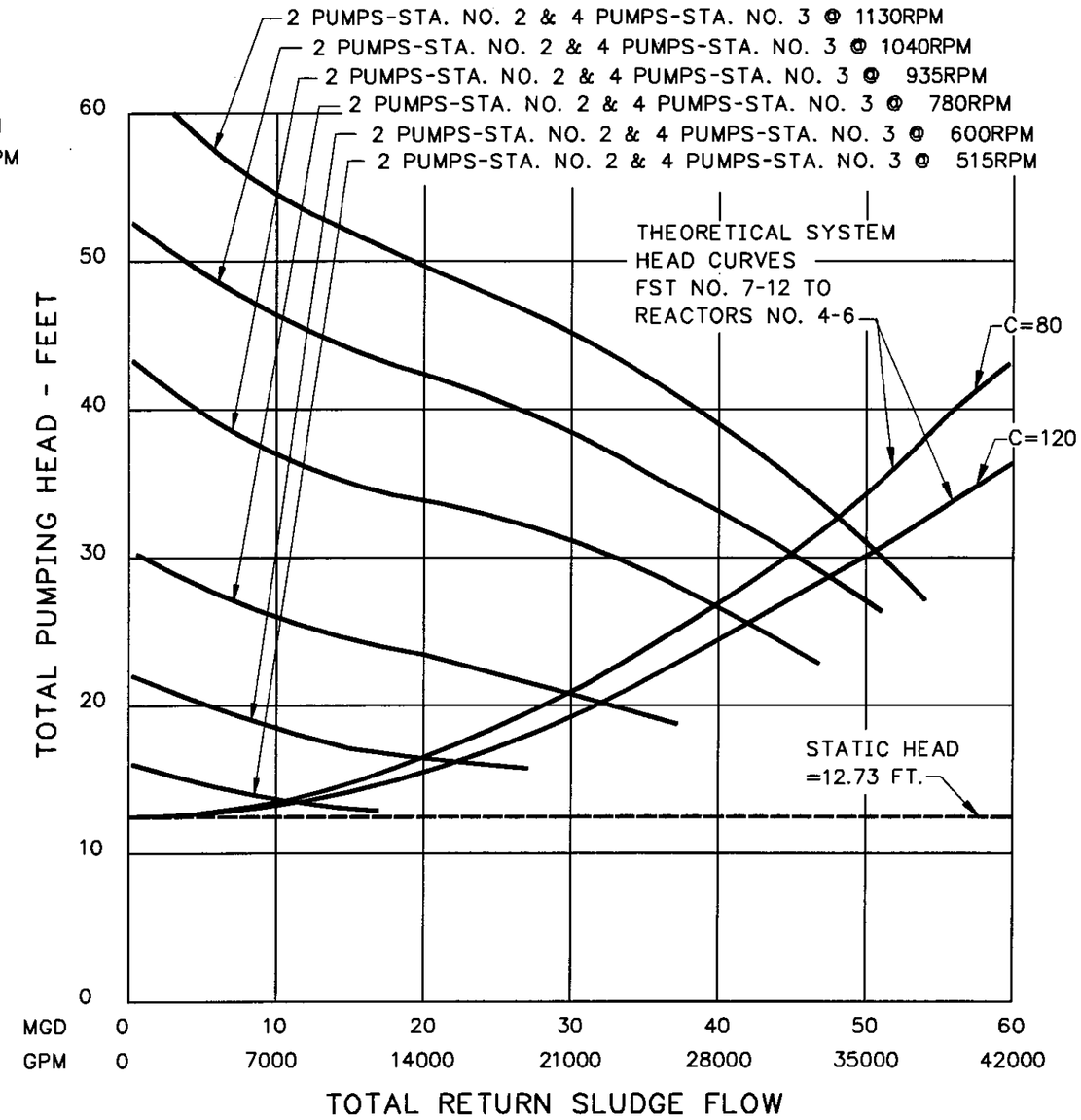

FIGURE III-FS-SPS-11 RETURN SLUDGE PUMP (RSP) DISCHARGE CURVES-SLUDGE PUMPING STATIONS NOS. 2 AND 3

FIGURE III-FS-SPS-10
RSP DISCHARGE CURVES-
SLUDGE PUMPING STATIONS
NOS.1 AND 2

FIGURE III-FS-SPS-11
RSP DISCHARGE CURVES-
SLUDGE PUMPING STATIONS
NOS.2 AND 3

GREELEY AND HANSEN
ENGINEERS

FILE: FS-SP-11 1:1 03/02/99 14:24 GH-E

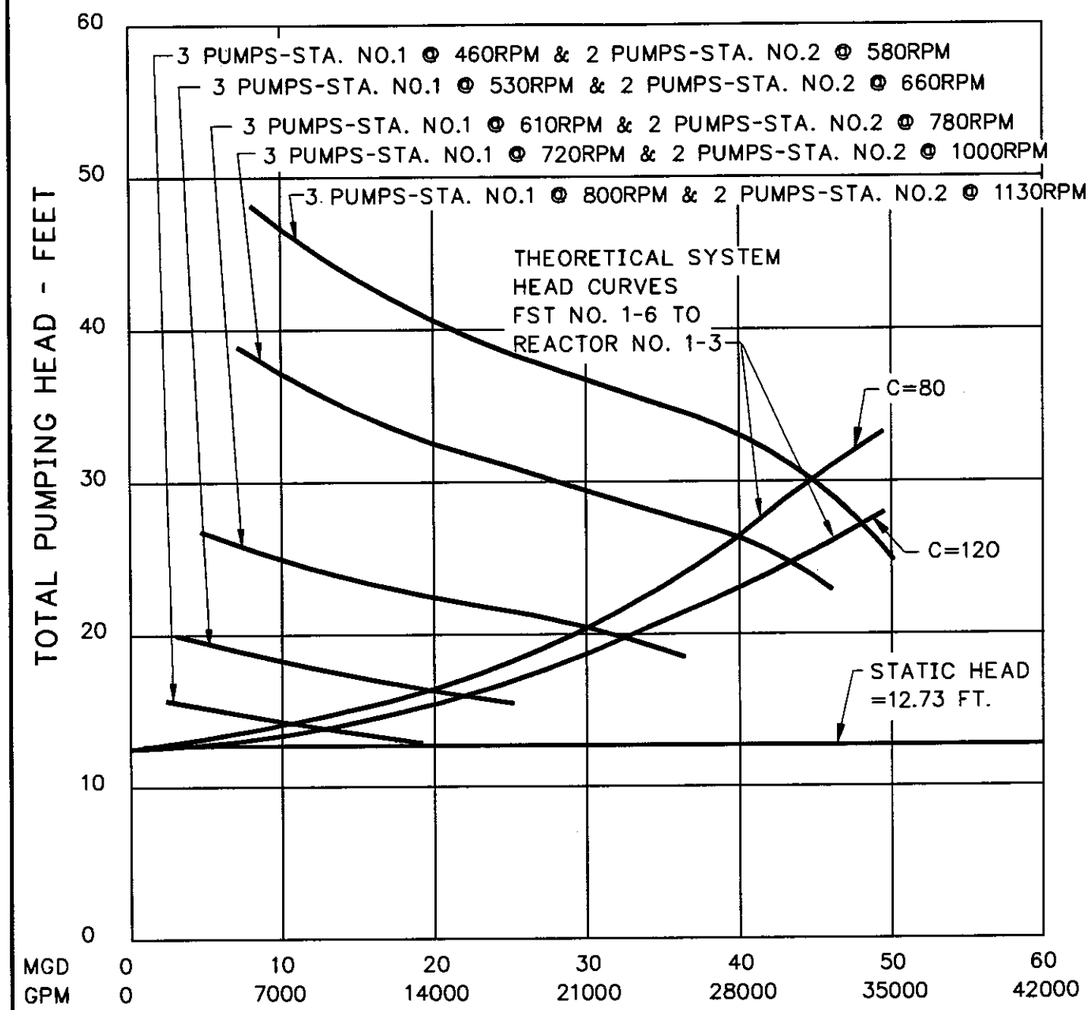

FIGURE III-FS-SPS-12 RETURN SLUDGE PUMP (RSP) DISCHARGE CURVES-SLUDGE PUMPING STATIONS NOS. 1 AND 2

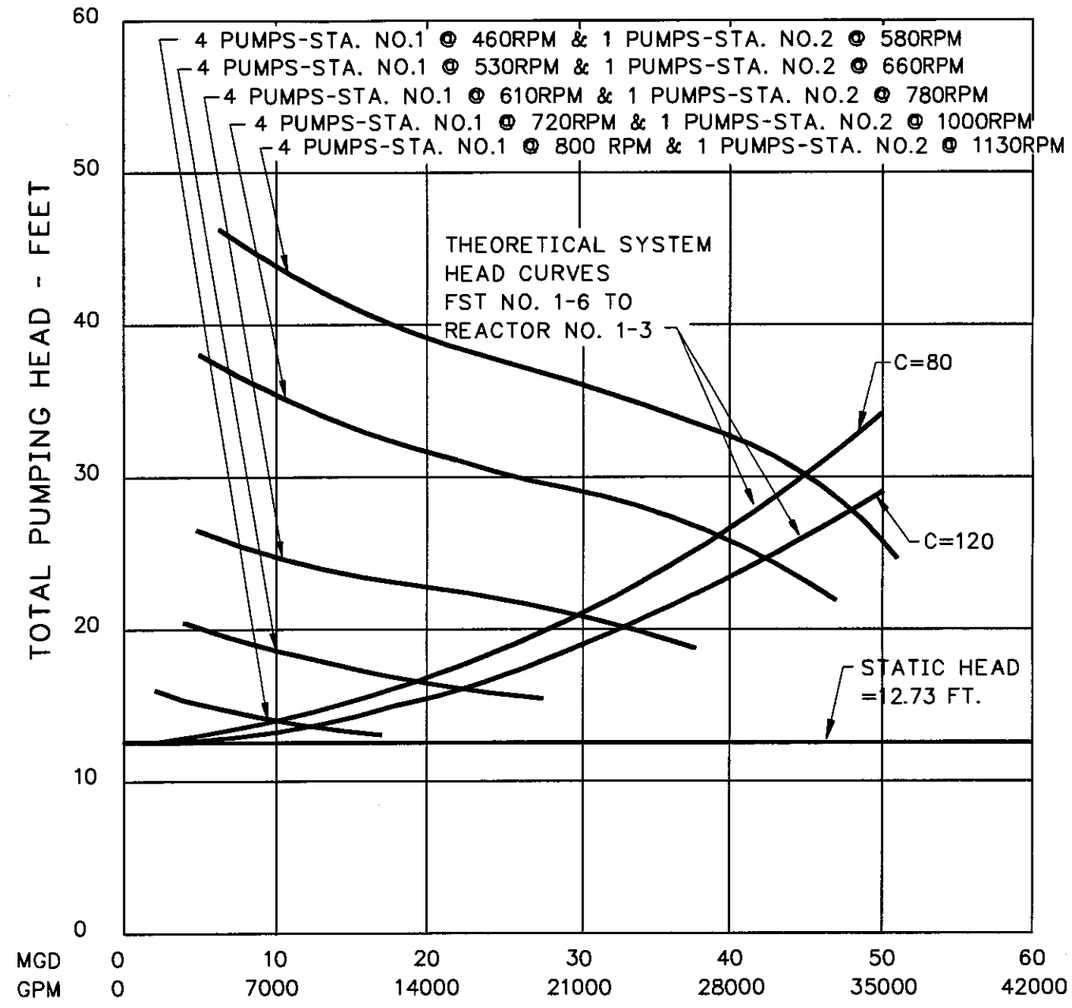

FIGURE III-FS-SPS-13 RETURN SLUDGE PUMP (RSP) DISCHARGE CURVES-SLUDGE PUMPING STATIONS NOS. 1 AND 2

FIGURE III-FS-SPS-12
RSP DISCHARGE CURVES-
SLUDGE PUMPING STATIONS
NOS.1 AND 2

FIGURE III-FS-SPS-13
RSP DISCHARGE CURVES-
SLUDGE PUMPING STATIONS
NOS.1 AND 2

GREELEY AND HANSEN
ENGINEERS

FILE: FS-SP-13 1:1 03/02/99 14:37 GH-E

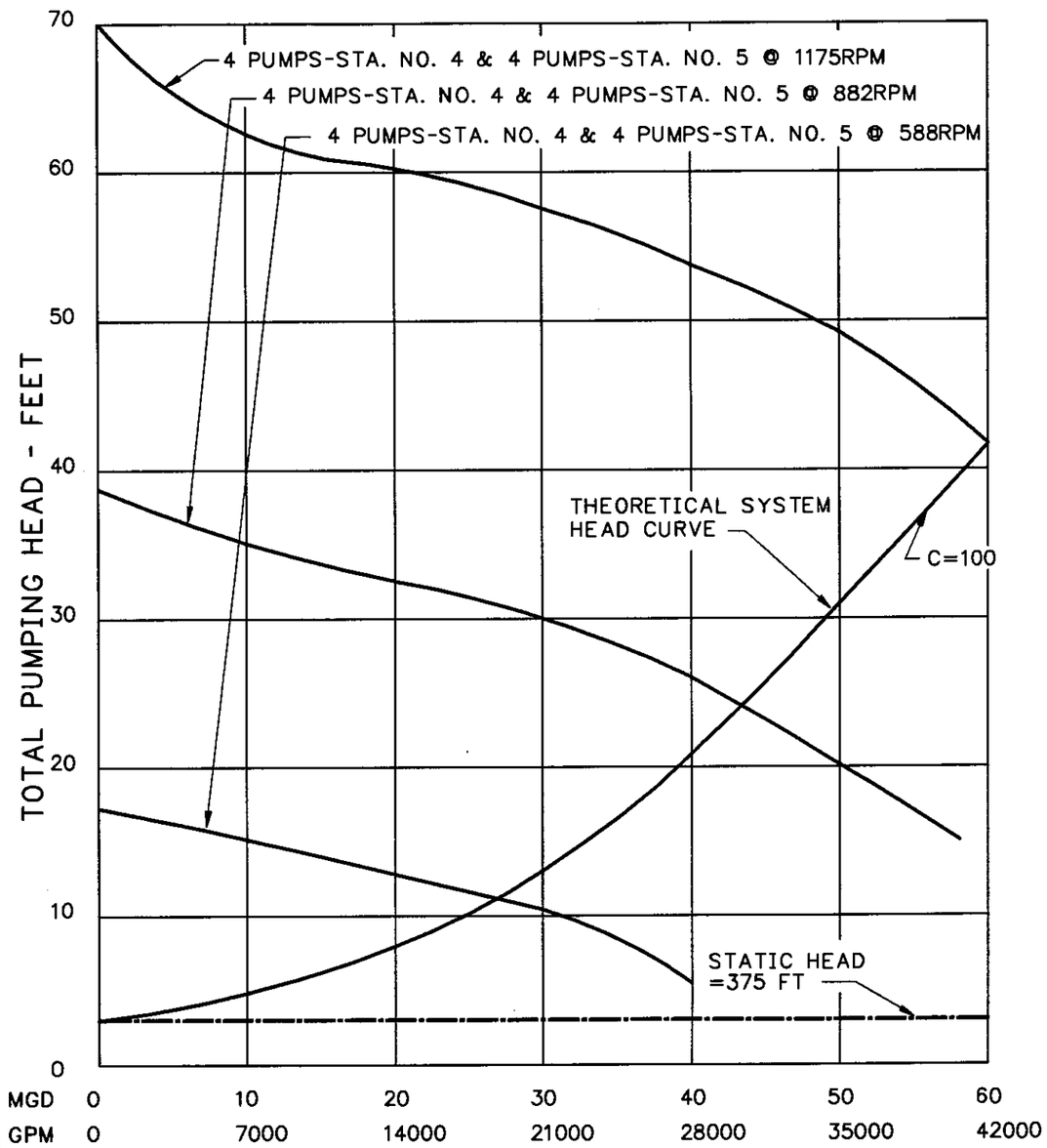

FIGURE III-FS-SPS-14 RETURN SLUDGE PUMP (RSP) DISCHARGE CURVE - SLUDGE PUMPING STATION NO. 4 AND NO. 5

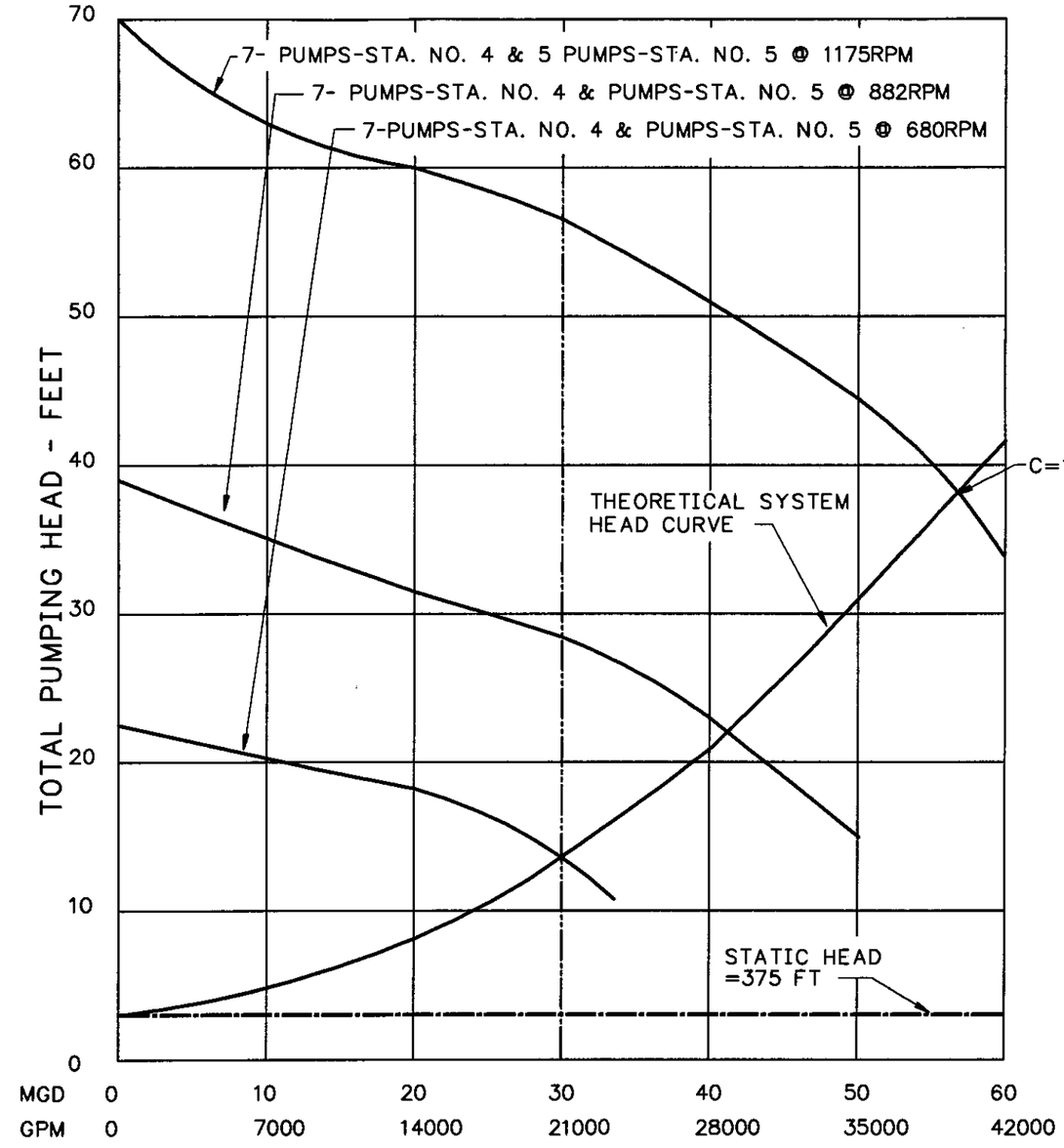

FIGURE III-FS-SPS-15 RETURN SLUDGE PUMP (RSP) DISCHARGE CURVE - SLUDGE PUMPING STATION NO. 4 AND NO. 5

FILE: FS-SP-15 1:1 03/02/99 14:44 GH-E

GREELEY AND HANSEN
INGINEERS

FIGURE III-SP-SPS-14 &15
RETURN SLUDGE PUMP
DISCHARGE CURVES

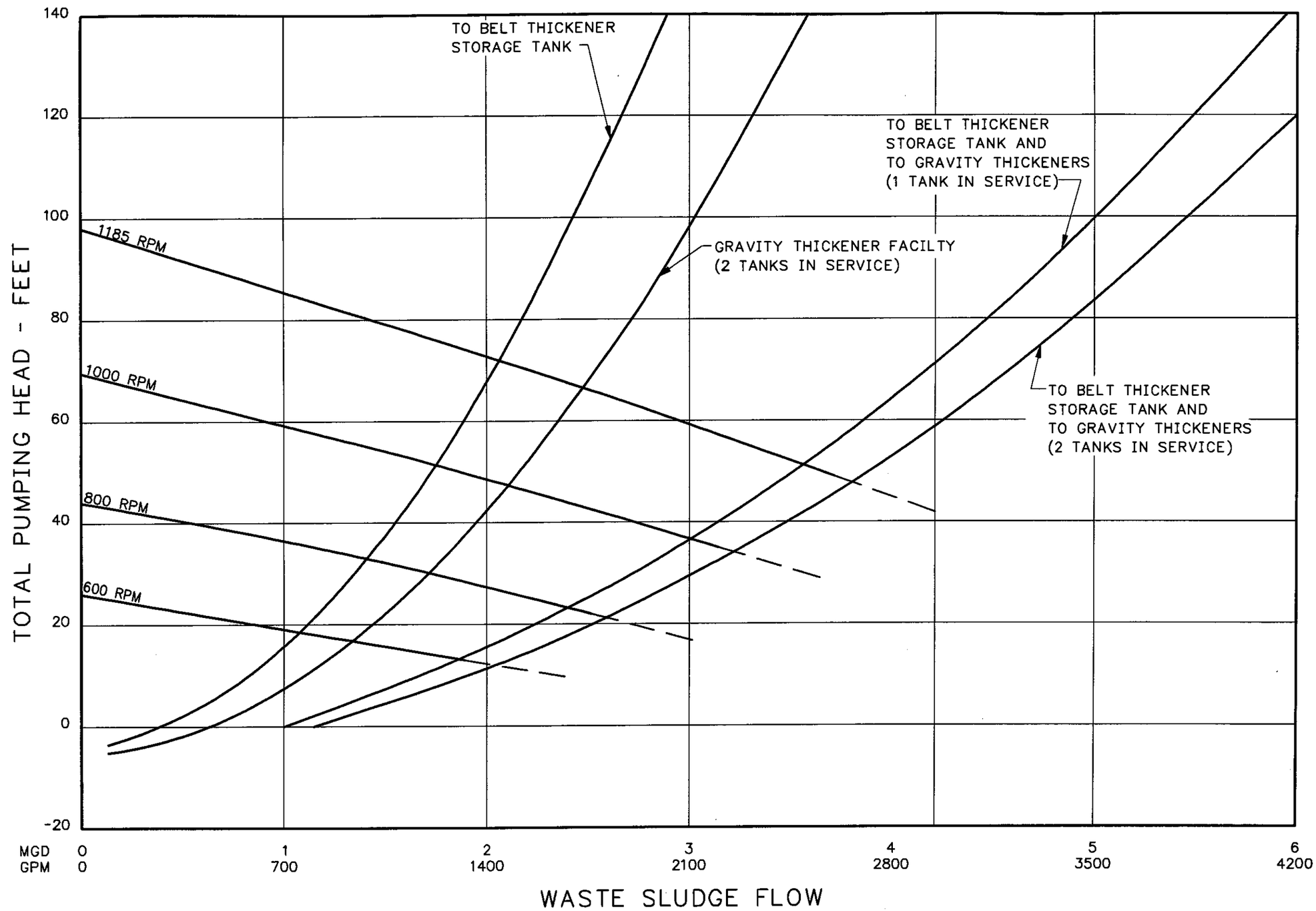

FIGURE III-FS-SPS-16 WASTE SLUDGE
PUMPS 1, 2 OR 3 DISCHARGES CURVES

GREELEY AND HANSEN
ENGINEERS

FILE: FS-SP-16 1:1 03/02/99 14:50 GH-E

FIGURE III-FS-SPS-16
WASTE SLUDGE
PUMP 1, 2 AND 3
DISCHARGES CURVES

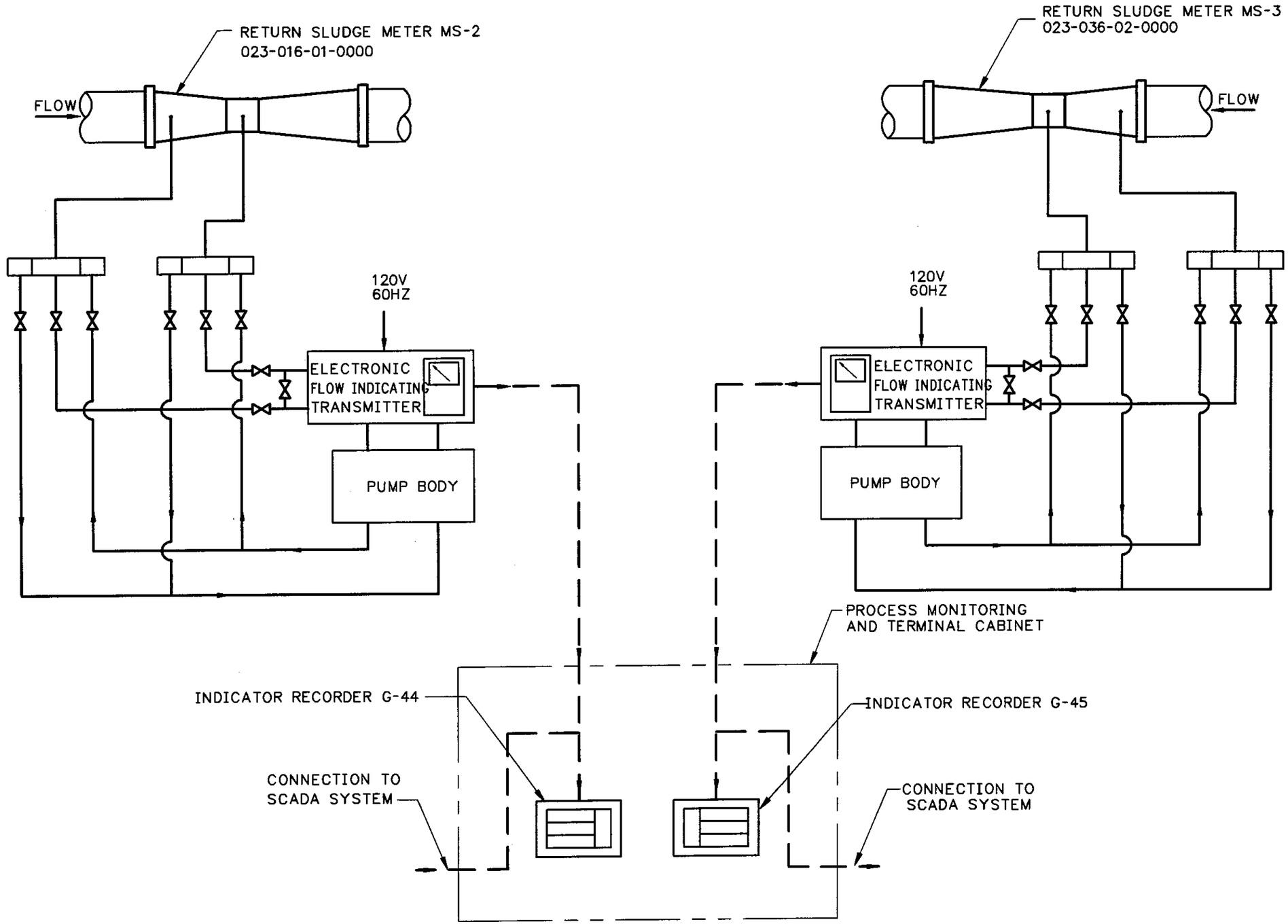

FIGURE III-FS-SPS-17 FLOW METERS MS-2 AND MS-3 DIAGRAM

GREELEY AND HANSEN
ENGINEERS

FILE: FS-SP-17 1:1 03/02/99 14:57 GH-E

FIGURE III-FS-SPS-17
FLOW METERS MS-2
AND MS-3 DIAGRAM

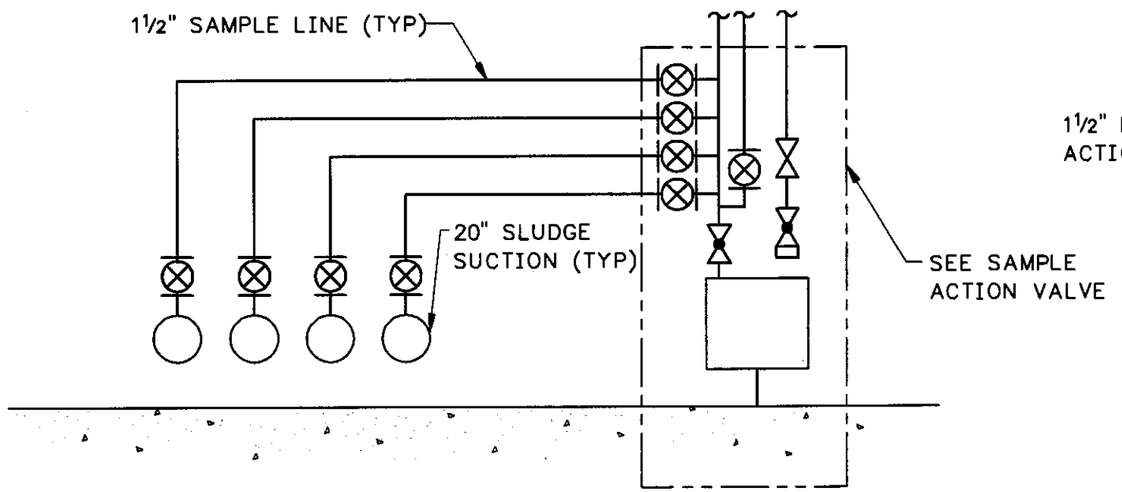

SLUDGE SAMPLING DIAGRAM

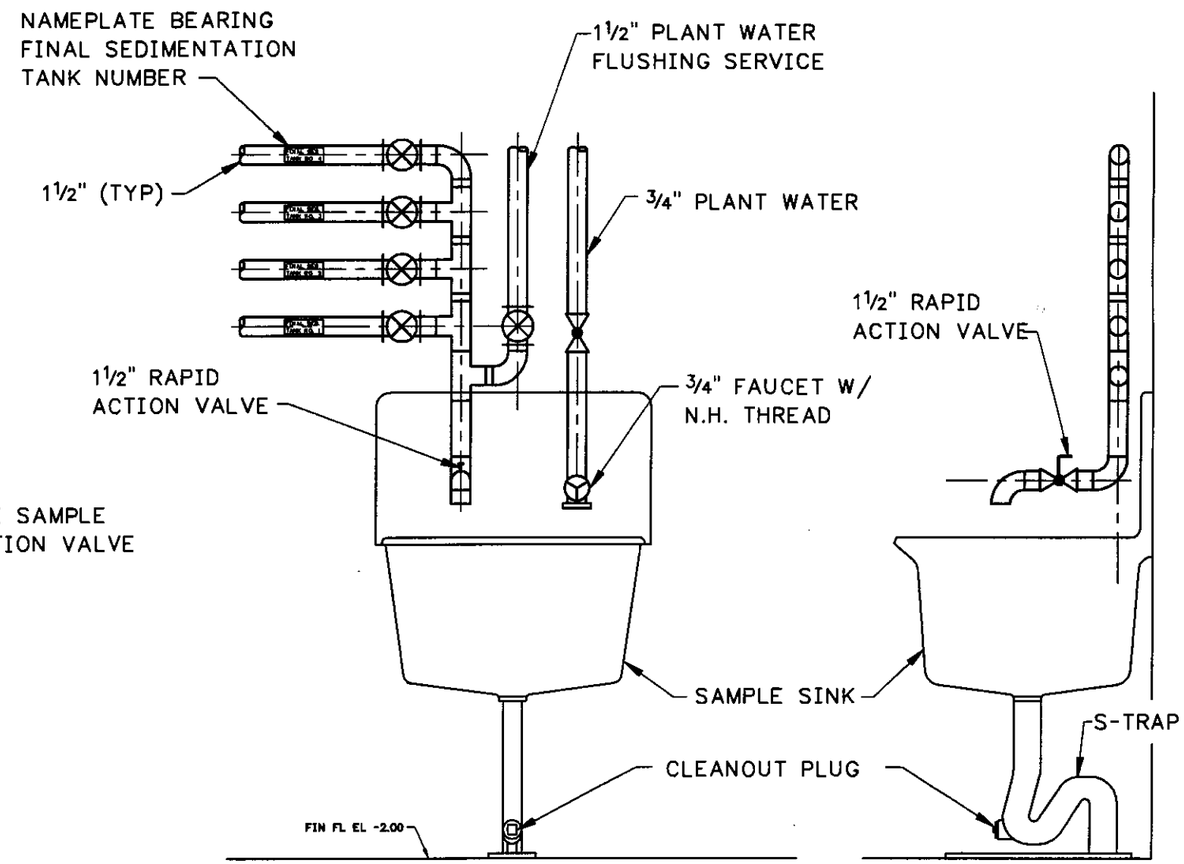

SAMPLE SINK DETAIL

FIGURE III-FS-SPS-18 TYPICAL RETURN SLUDGE SAMPLE SINK

FILE: FS-SP-18 1:1 03/02/99 15:01 GH-E

GREELEY AND HANSEN
ENGINEERS

FIGURE III-FS-SPS-18
TYPICAL RETURN SLUDGE
SAMPLE SINK

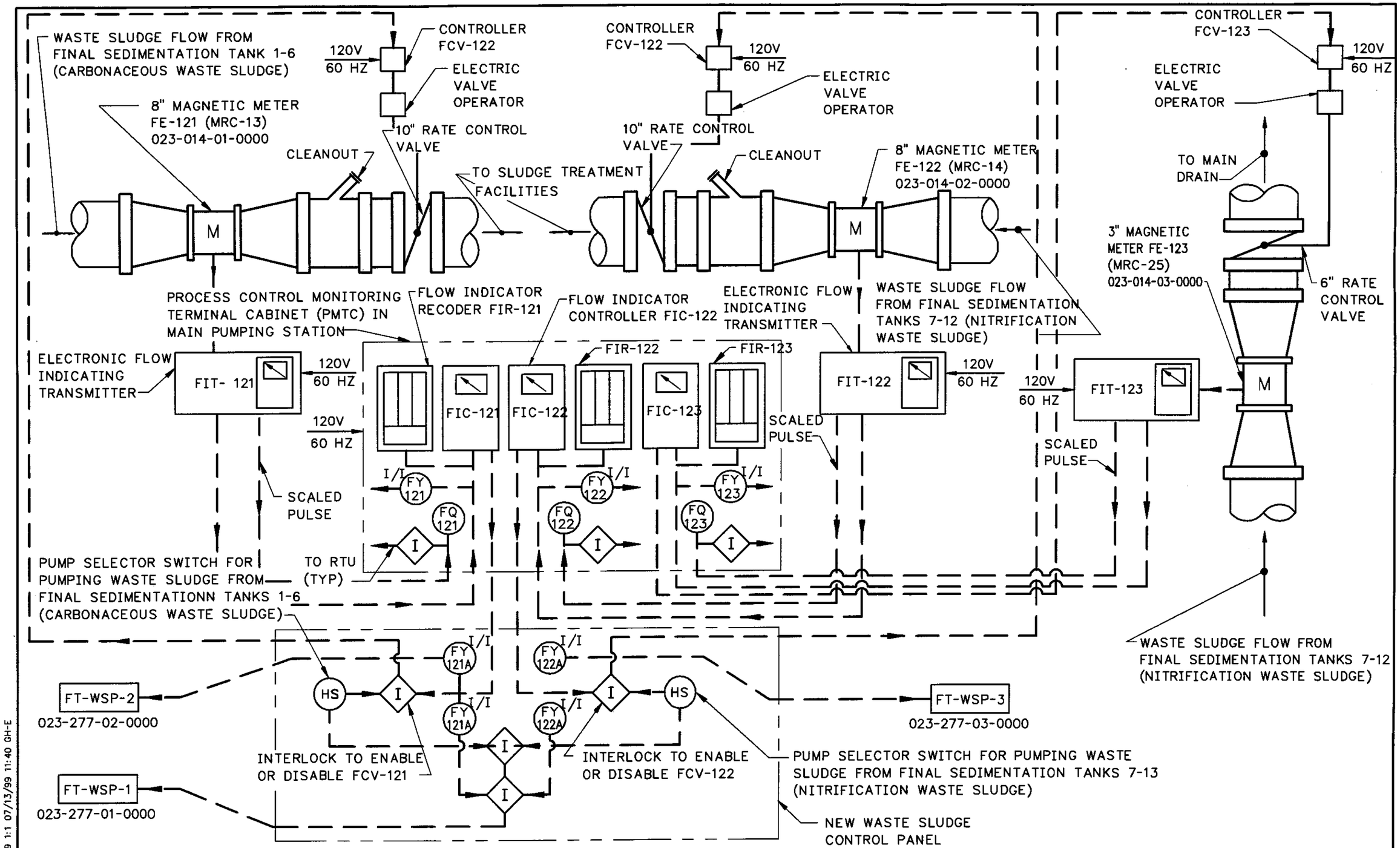

FIGURE III-FS-SPS-19 RATE CONTROLLERS MRC-13, MRC-14 AND MRC-25 DIAGRAM

GREELEY AND HANSEN ENGINEERS

FILE: FS-SP-19 1:1 07/13/99 11:40 GH-E

FIGURE III-FS-SPS-19 RATE CONTROLLERS MRC-13, MRC-14 AND MRC-25

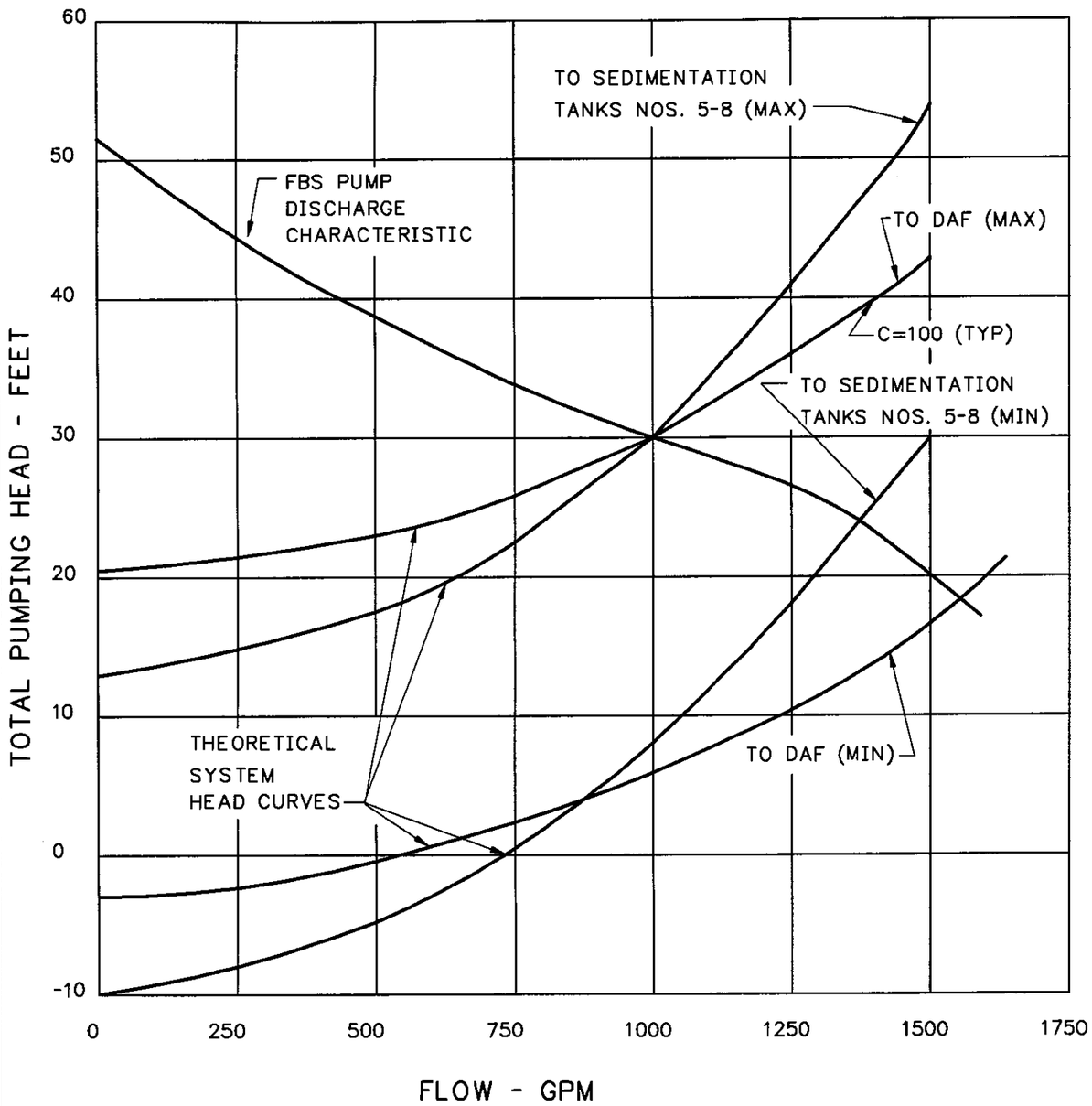

FIGURE III-FS-SPS-20 FLOATING BIOLOGICAL SOLIDS (FBS) PUMP DISCHARGE CURVES

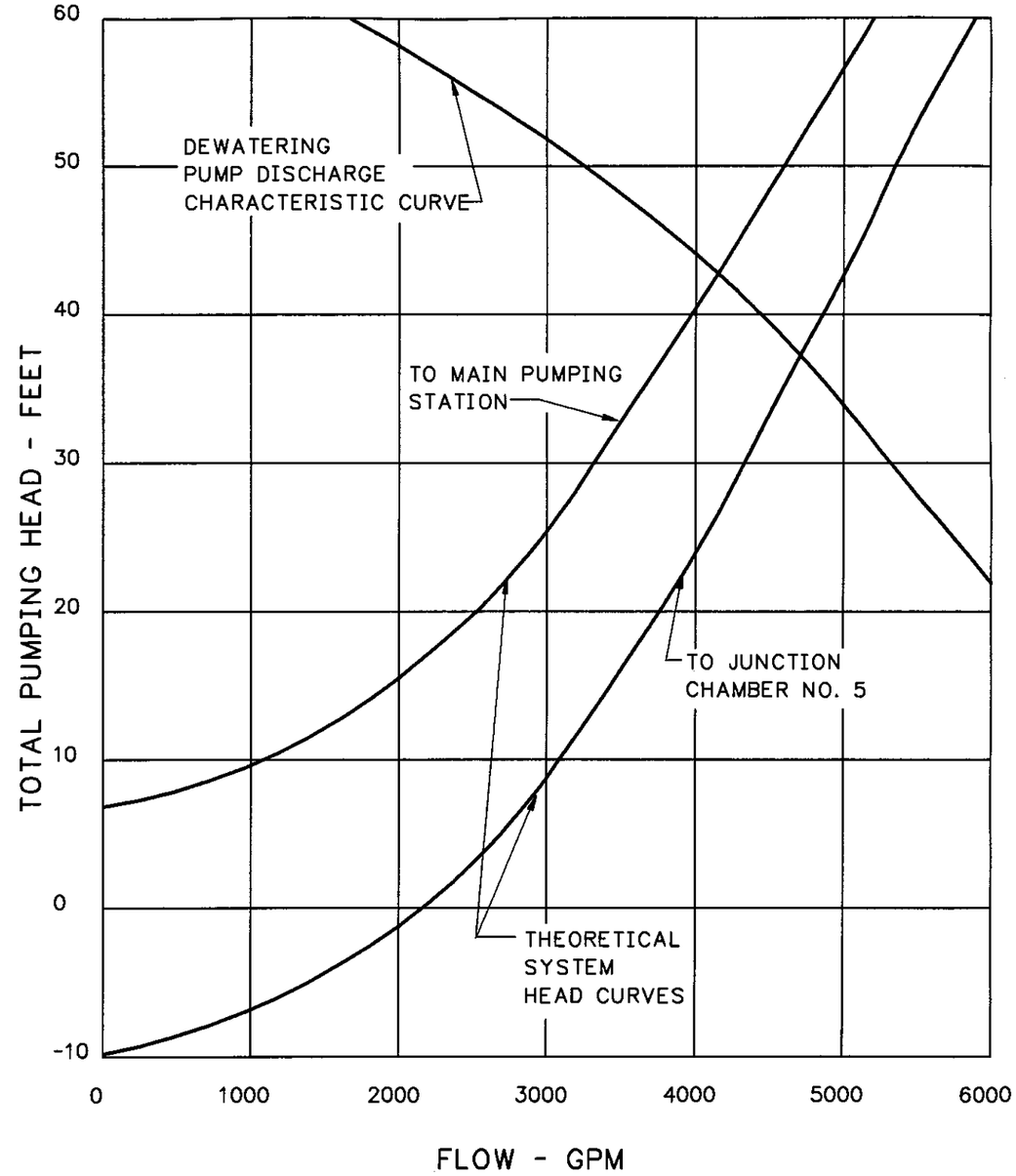

FIGURE III-FS-SPS-21 DEWATERING PUMP DISCHARGE CURVES

FIGURE III-FS-SPS-20
FBS PUMP
DISCHARGE CURVES

FIGURE III-FS-SPS-21
DEWATERING PUMP
DISCHARGE CURVES

GREELEY AND HANSEN
ENGINEERS

FILE: FS-SP-22 1:1 03/02/99 15:16 GH-E

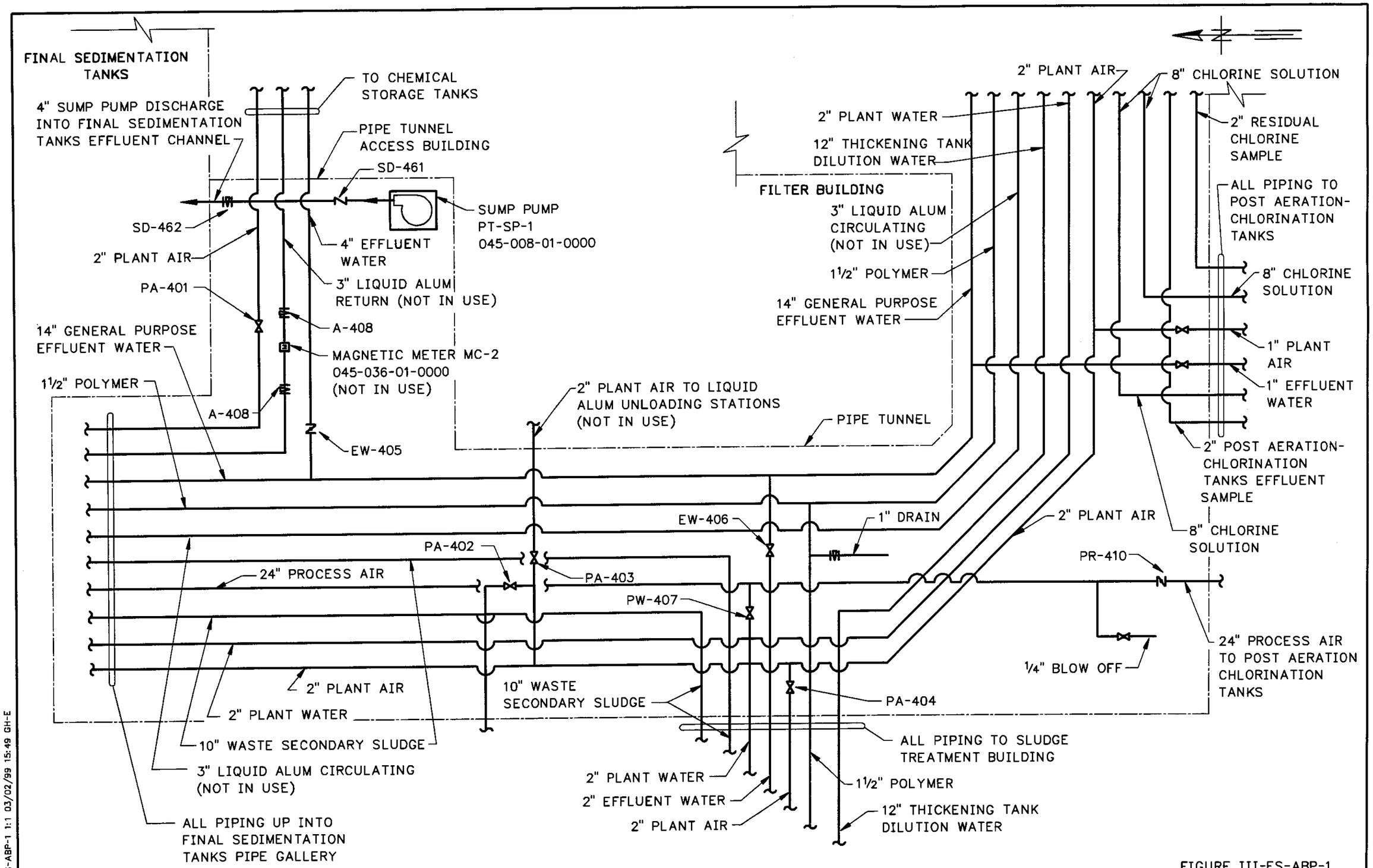

FILE: FS-ABP-1 1:1 03/02/99 15:49 GH-E

GREELEY AND HANSEN ENGINEERS

FIGURE III-FS-ABP-1 ACCESS BUILDING AND PIPE TUNNEL SCHEMATIC

FIGURE III-FS-ABP-1
ACCESS BUILDING AND
PIPE TUNNEL SCHEMATIC

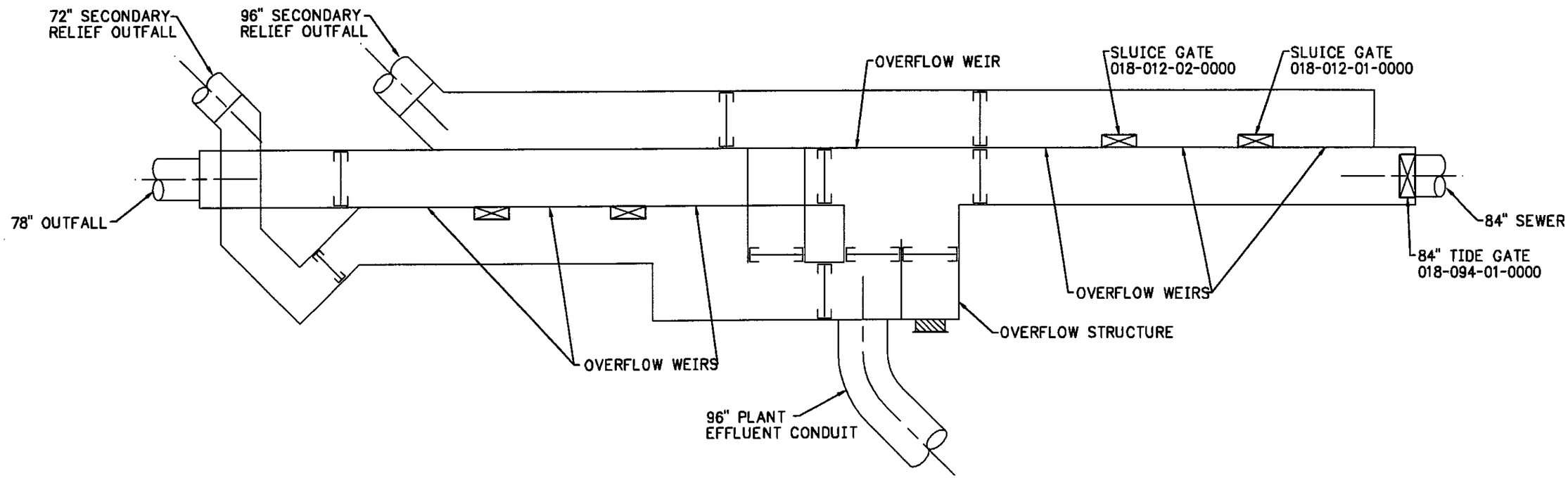

FIGURE III-OS-1 OVERFLOW STRUCTURE SCHEMATIC

GREELEY AND HANSEN ENGINEERS
FALLER, DAVIS & ASSOCIATES

FIGURE III-OS-1
OVERFLOW STRUCTURE
SCHEMATIC

FILE: OS-1 1:1 02/22/99 09:26 GH-E

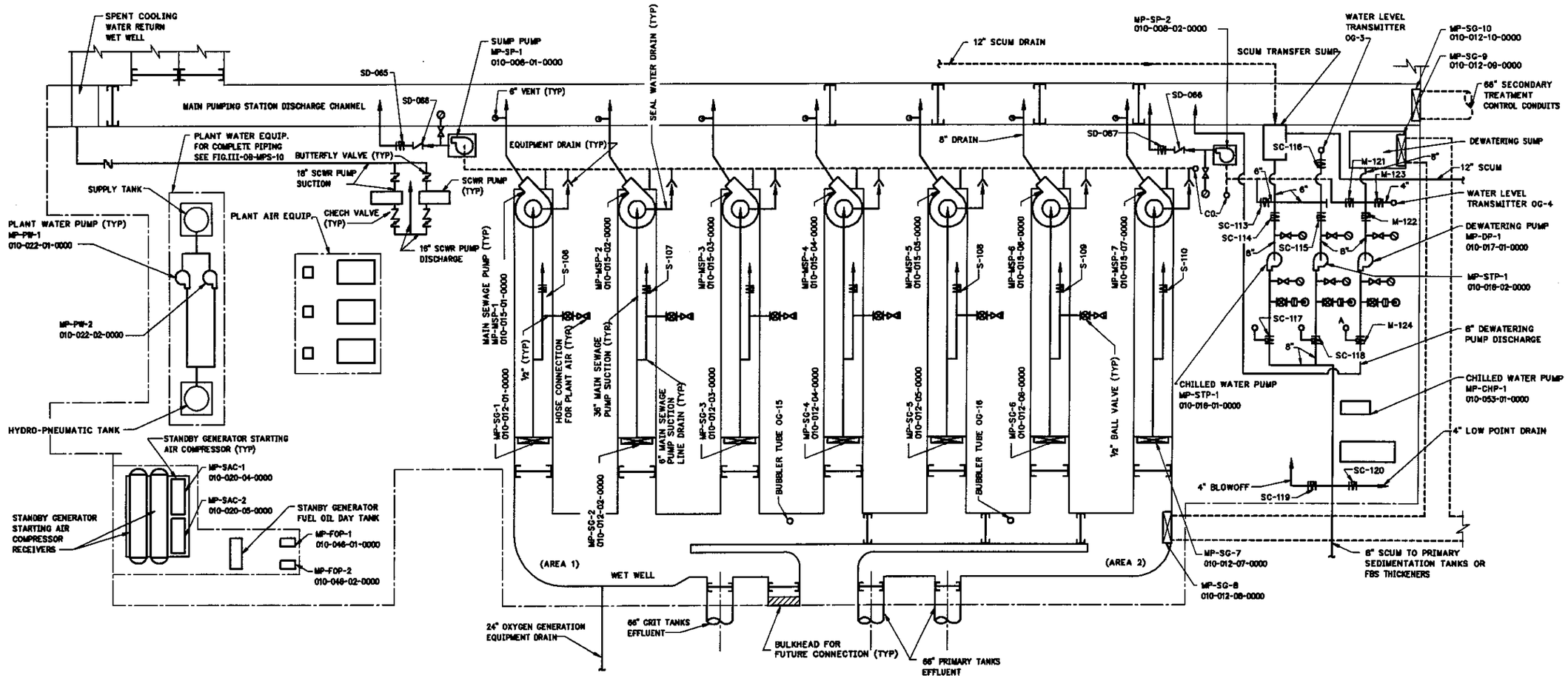

FIGURE III-OB-MPS-1 MAIN PUMPING STATION LOWER FLOOR SCHEMATIC PLAN

FILE: OB-MP-1 1:1 02/26/99 11:31 GH-E

GREELEY AND HANSEN
ENGINEERS

FIGURE III-OB-MPS-1
MAIN PUMPING STATION LOWER
FLOOR SCHEMATIC PLAN

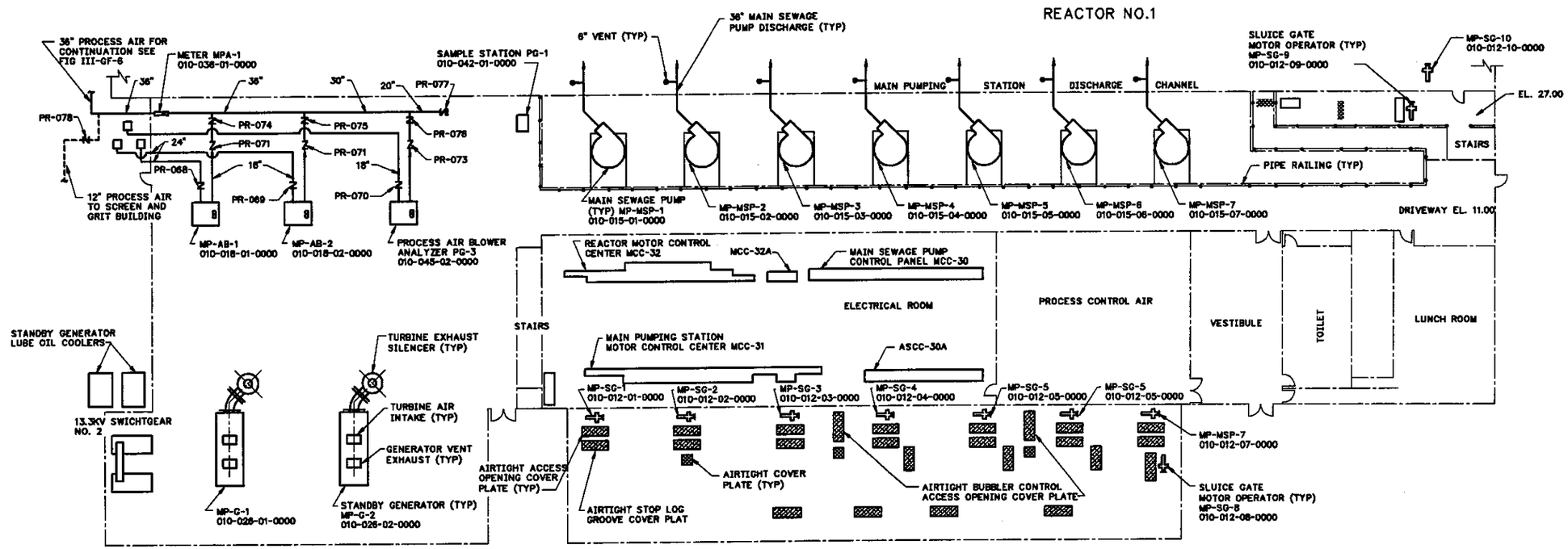

FIGURE III-OB-MPS-2 MAIN PUMPING STATION OPERATING FLOOR SCHEMATIC PLAN

FILE: OB-MP-2 1:1 02/26/99 11:36 GH-E

GREELEY AND HANSEN
ENGINEERS

FIGURE III-OB-MPS-2
MAIN PUMPING STATION OPERATING
FLOOR SCHEMATIC PLAN

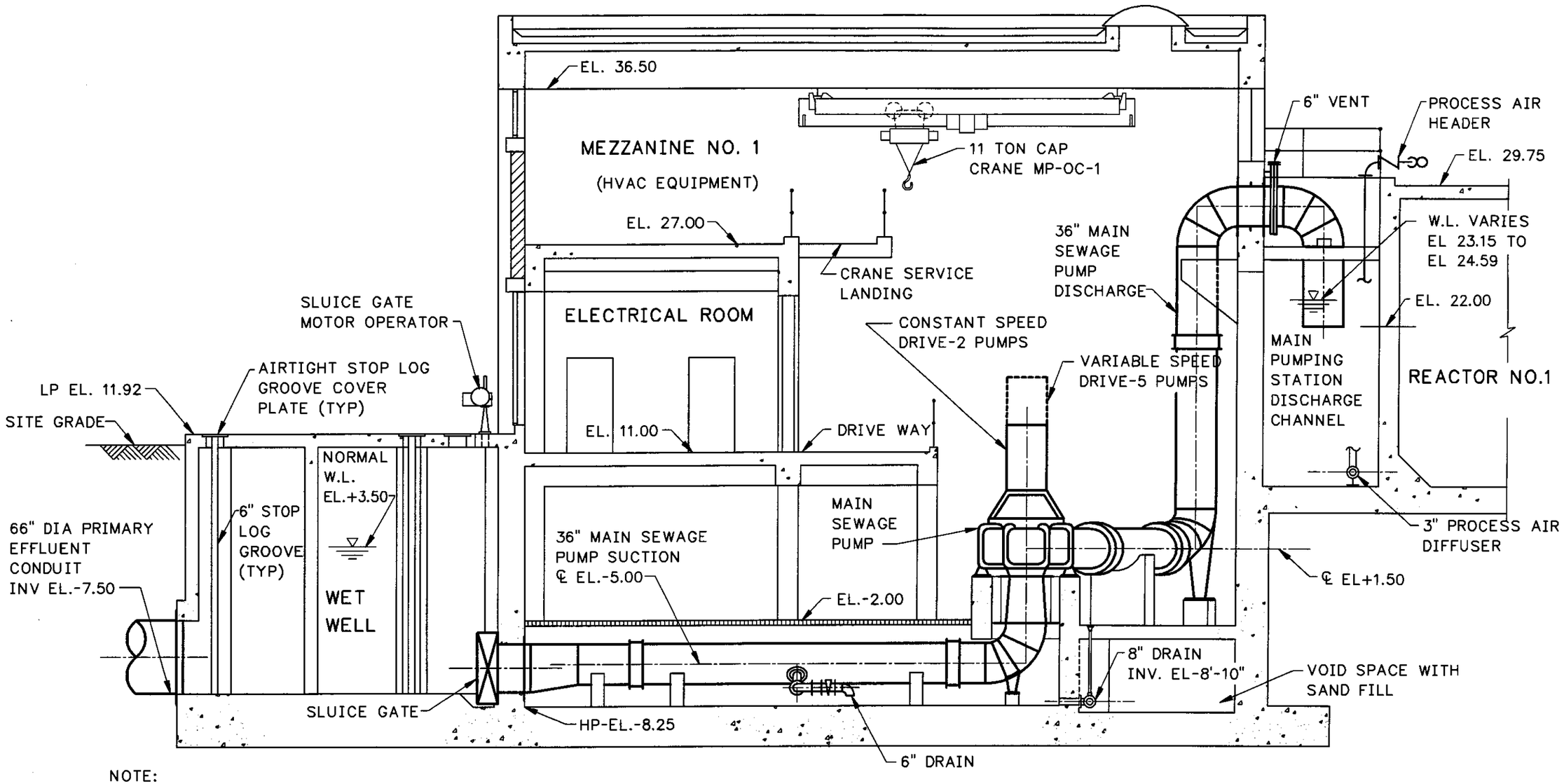

NOTE:
HVAC DUCTWORK AND ELECTRICAL CONDUITS NOT SHOWN. SEE CONTRACT PLANS OR SHOP DRAWINGS.

FIGURE III-OB-MPS-3 MAIN PUMPING STATION CROSS SECTION

FILE: OB-MP-3 1:1 02/26/99 11:45 GH-E

GREELEY AND HANSEN
ENGINEERS

FIGURE III-OB-MPS-3
MAIN PUMPING STATION
CROSS SECTION

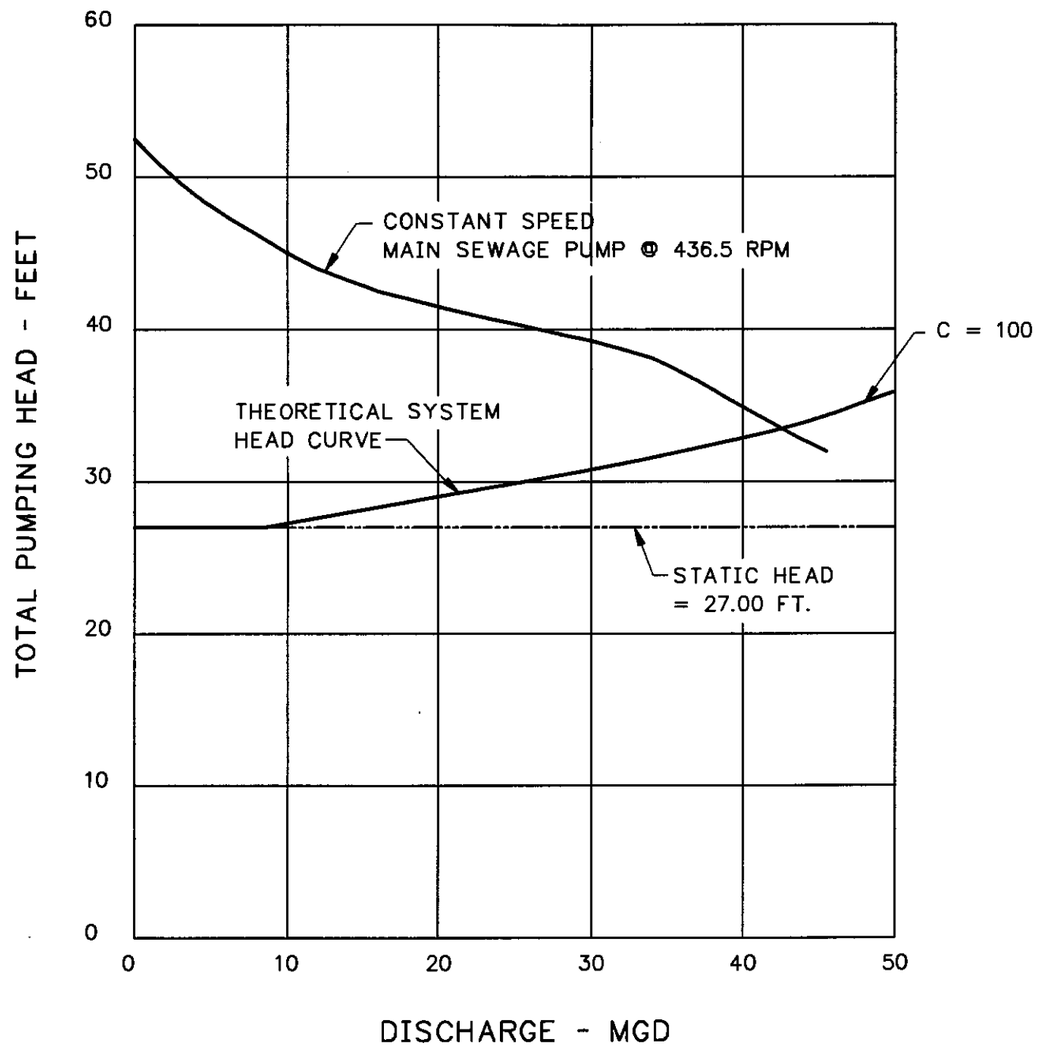

FIGURE III-OB-MPS-4 MAIN SEWAGE PUMPS
MP-MPS-2 AND 5 (CONSTANT SPEED)
DISCHARGE CURVES

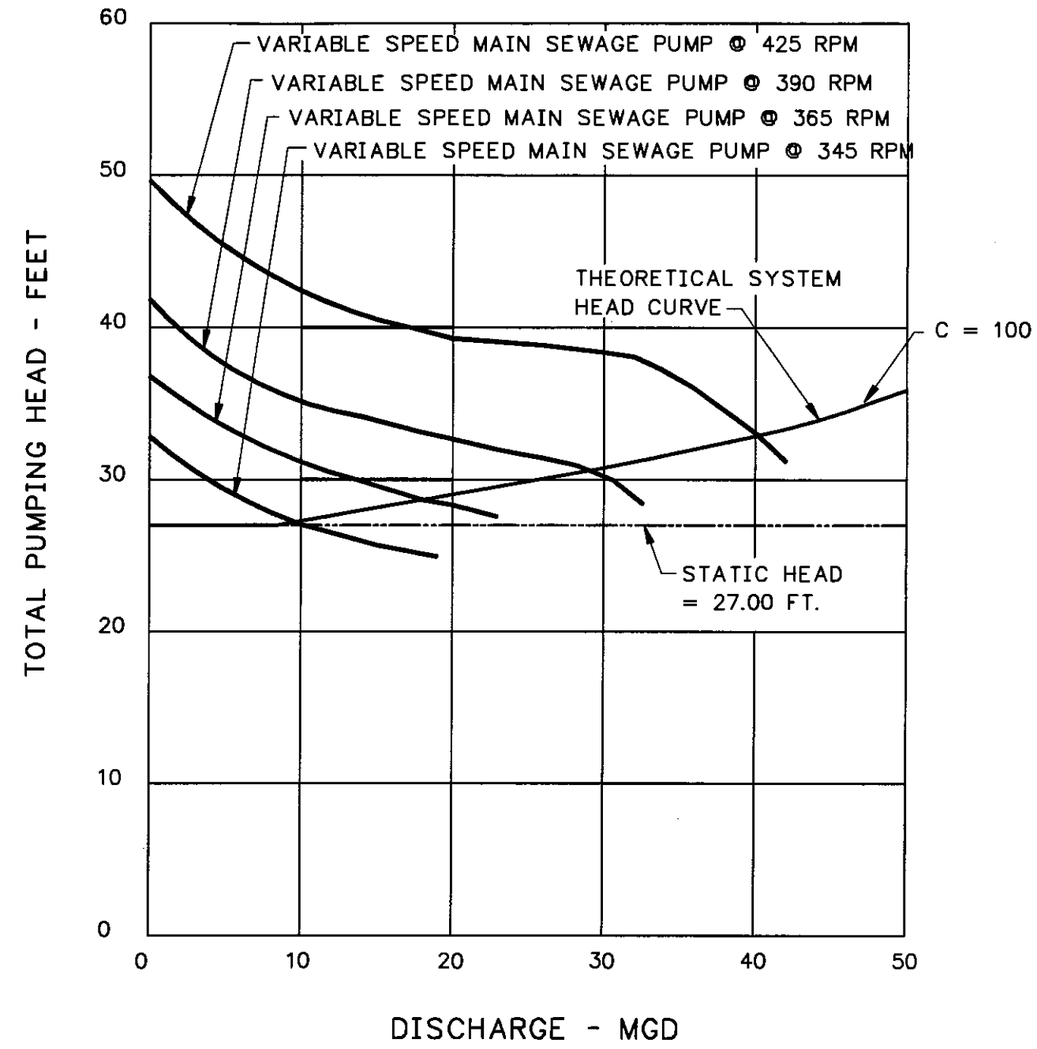

FIGURE III-OB-MPS-5 MAIN SEWAGE PUMPS
MP-MSP-1, 6 AND 7 (VARIABLE SPEED)
DISCHARGE CURVES

FIGURE III-OB-MPS-4 MAIN SEWAGE PUMPS
MP-MSP-2 AND 5 (CONSTANT SPEED)
DISCHARGE CURVES

FIGURE III-OB-MPS-5 MAIN SEWAGE PUMPS
MP-MSP-1, 6 AND 7 (VARIABLE SPEED)
DISCHARGE CURVES

FILE: OB-MP-5 1:1 02/26/99 13:09 GH-E

GREELEY AND HANSEN
ENGINEERS

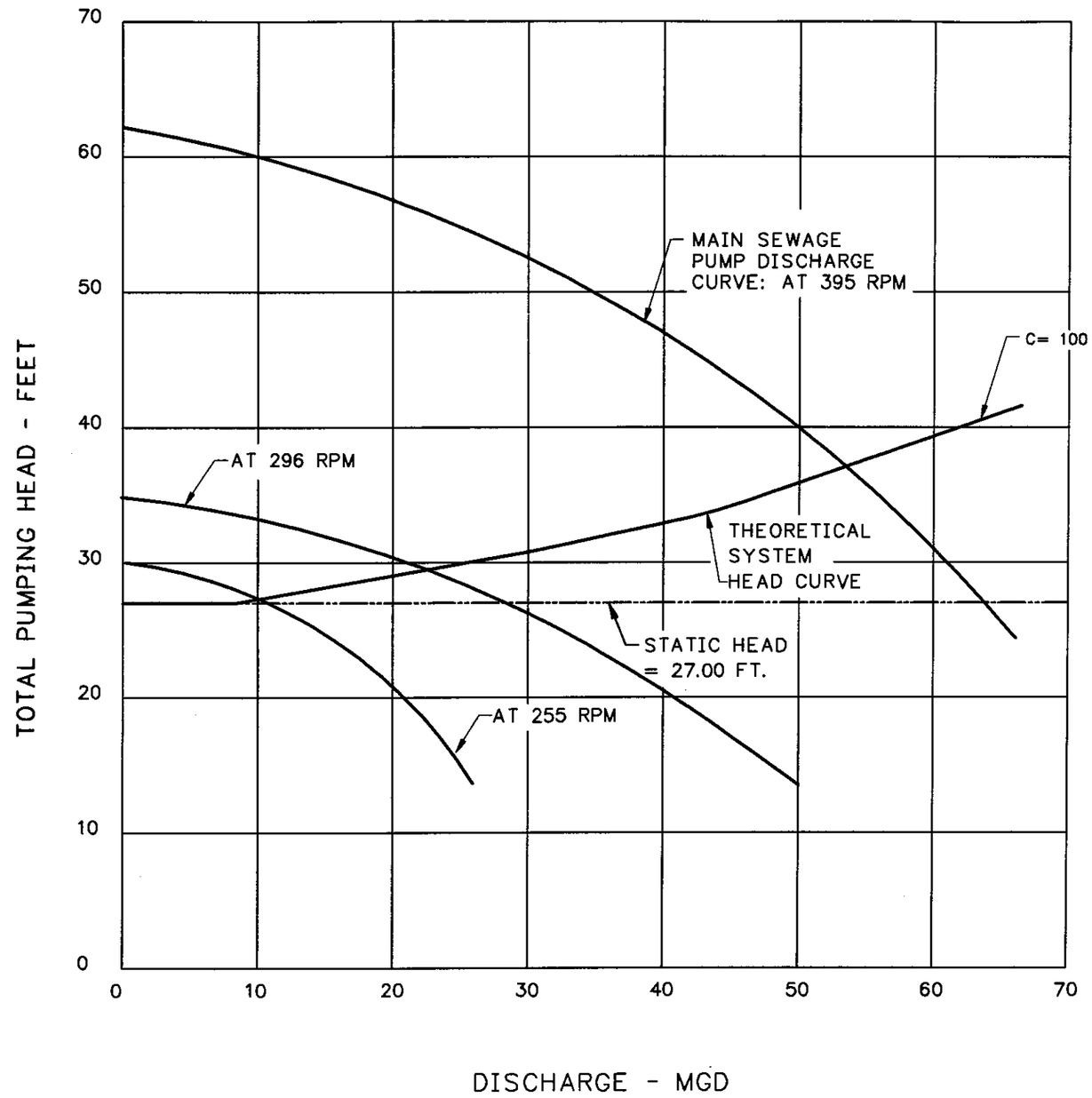

FIGURE III-OB-MPS-6 MAIN SEWAGE PUMPS
MP-MSP-3 AND 4 (VARIABLE SPEED)
DISCHARGE CURVES

GREELEY AND HANSEN
ENGINEERS

FILE: OB-MP-6 1:1 02/26/99 13:26 GH-E

FIGURE III-OB-MPS-6 MAIN SEWAGE PUMPS
MP-MSP-3 AND 4 (VARIABLE SPEED)
DISCHARGE CURVES

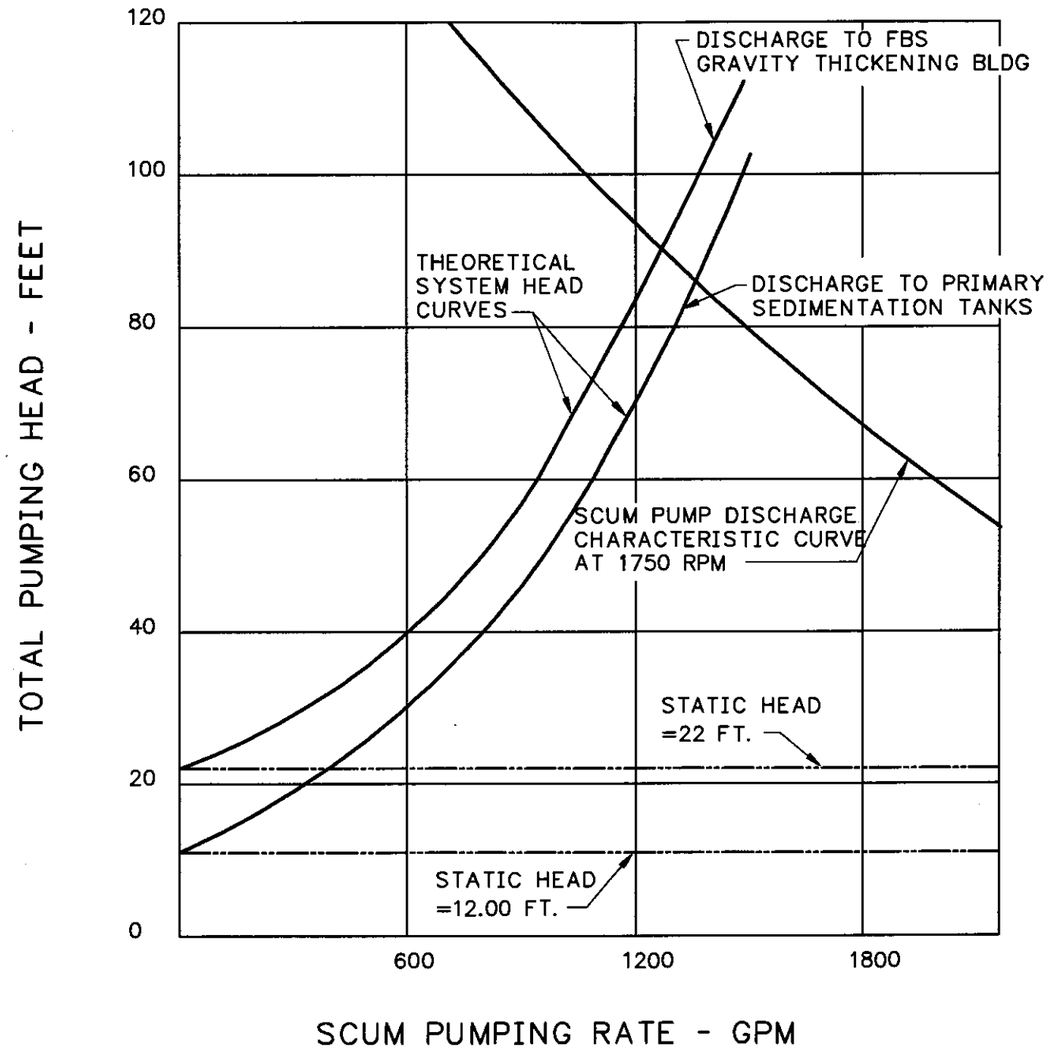

FIGURE III-OB-MPS-7 SCUM TRANSFER PUMP DISCHARGE CURVES

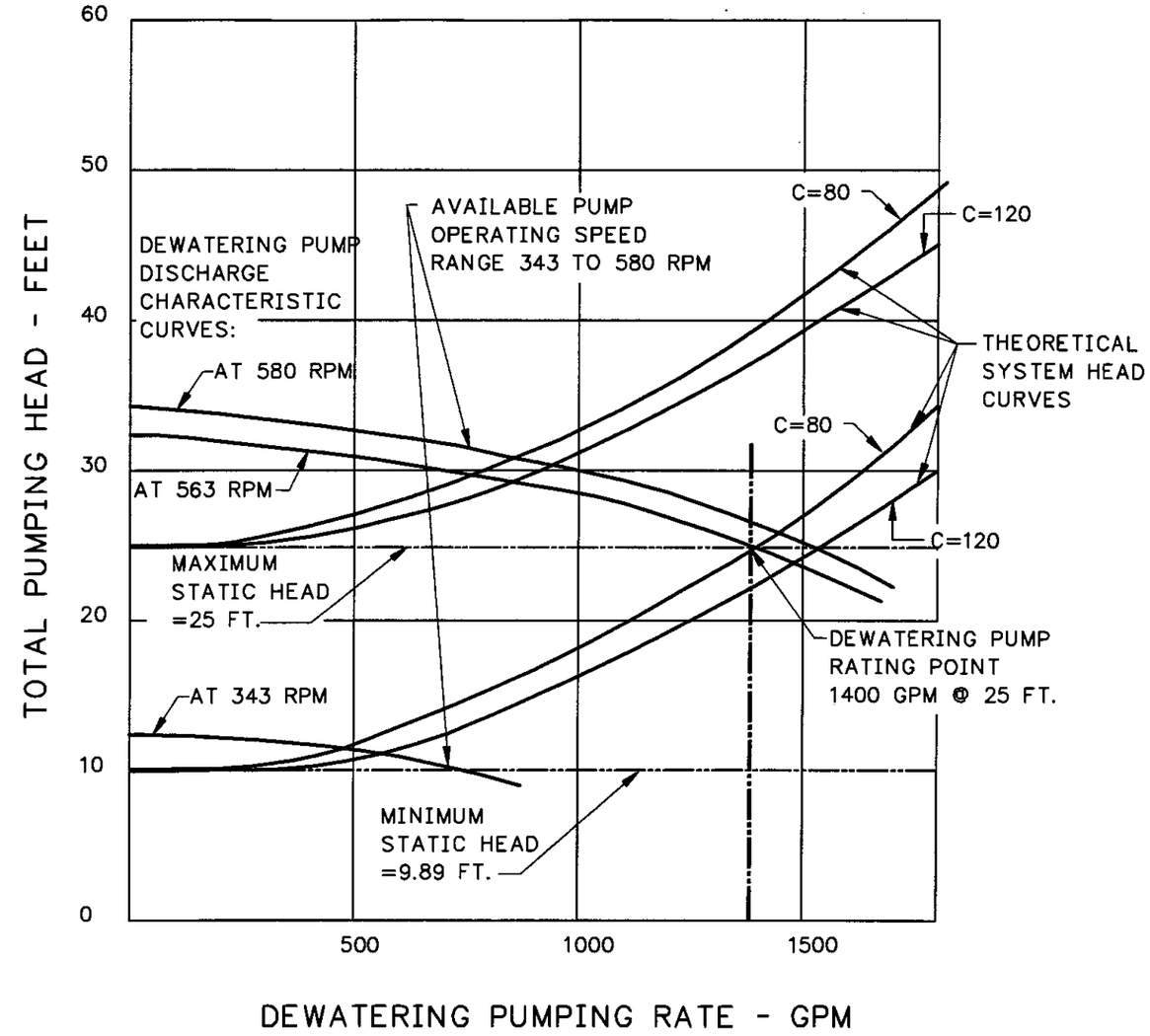

FIGURE III-OB-MPS-8 DEWATERING PUMP DISCHARGE CURVES

FIGURE III-OB-MPS-7
SCUM TRANSFER PUMP
DISCHARGE CURVES

FIGURE III-OB-MPS-8
DEWATERING PUMP
DISCHARGE CURVES

GREELEY AND HANSEN
ENGINEERS

FILE: OB-MP-8 1:1 02/26/99 13:20 GH-E

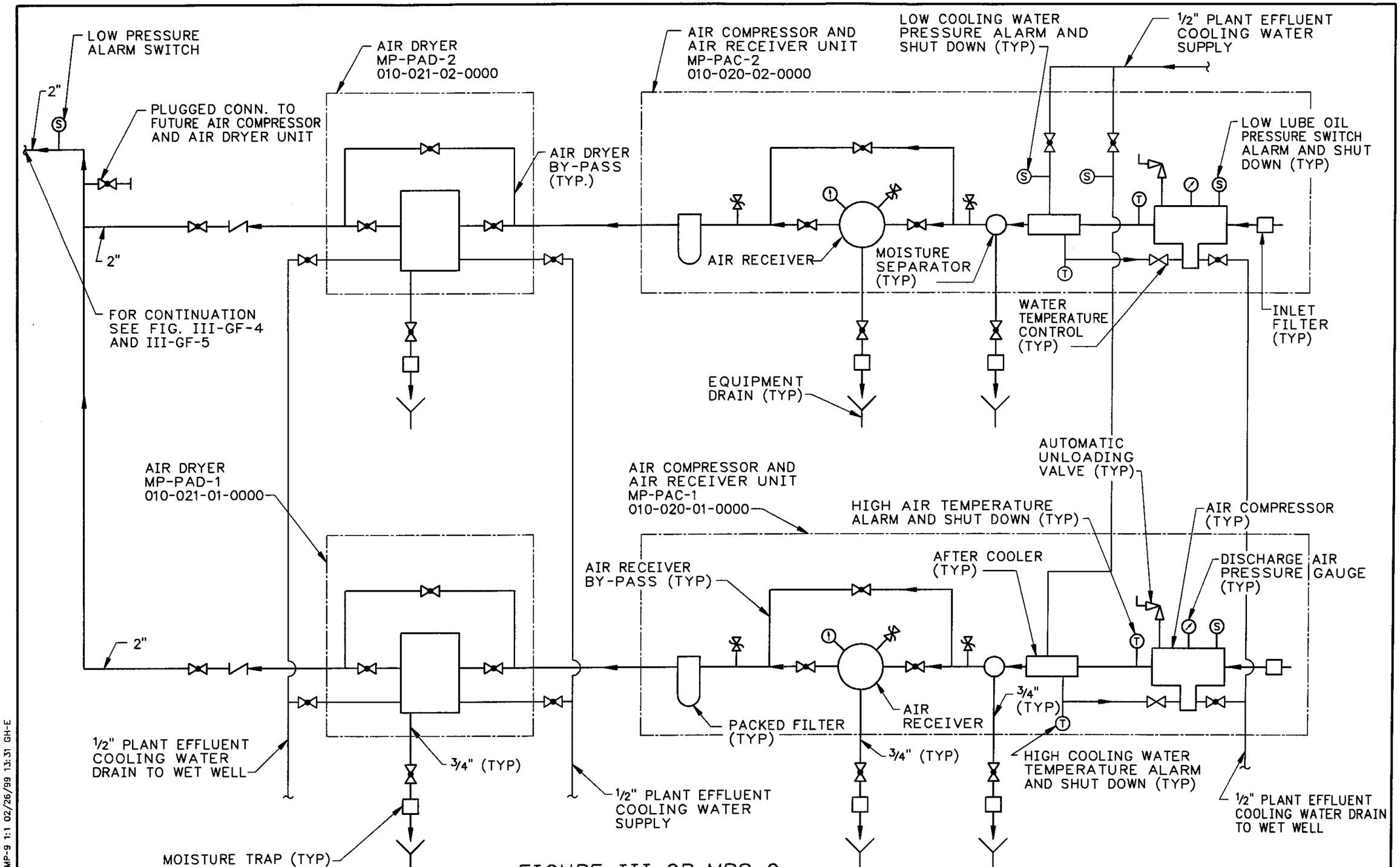

FIGURE III-OB-MPS-9
PLANT AIR COMPRESSOR DIAGRAM

GREELEY AND HANSEN ENGINEERS

FILE: OB-MP-9 1:1 02/26/99 13:31 GH-E

FIGURE III-OB-MPS-9
PLANT AIR COMPRESSOR DIAGRAM

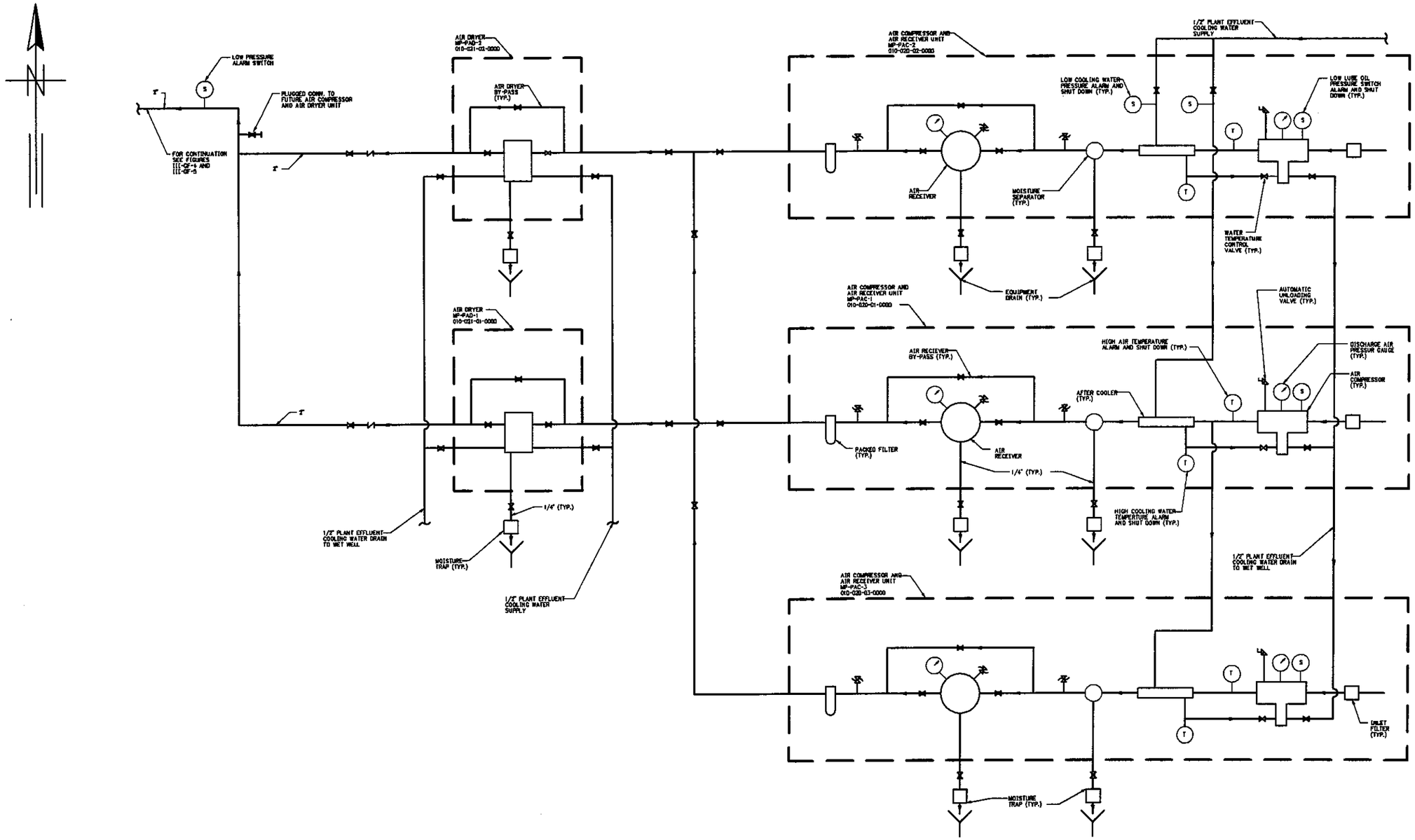

FIGURE III-OB-MPS-10
PLANT AIR COMPRESSOR DIAGRAM

FILE: OB-MP-10 1:1 02/26/99 13:53 GH-E

GREELEY AND HANSEN ENGINEERS
FALLER, DAVIS & ASSOCIATES

FIGURE III-OB-MPS-10
PLANT AIR COMPRESSOR
DIAGRAM

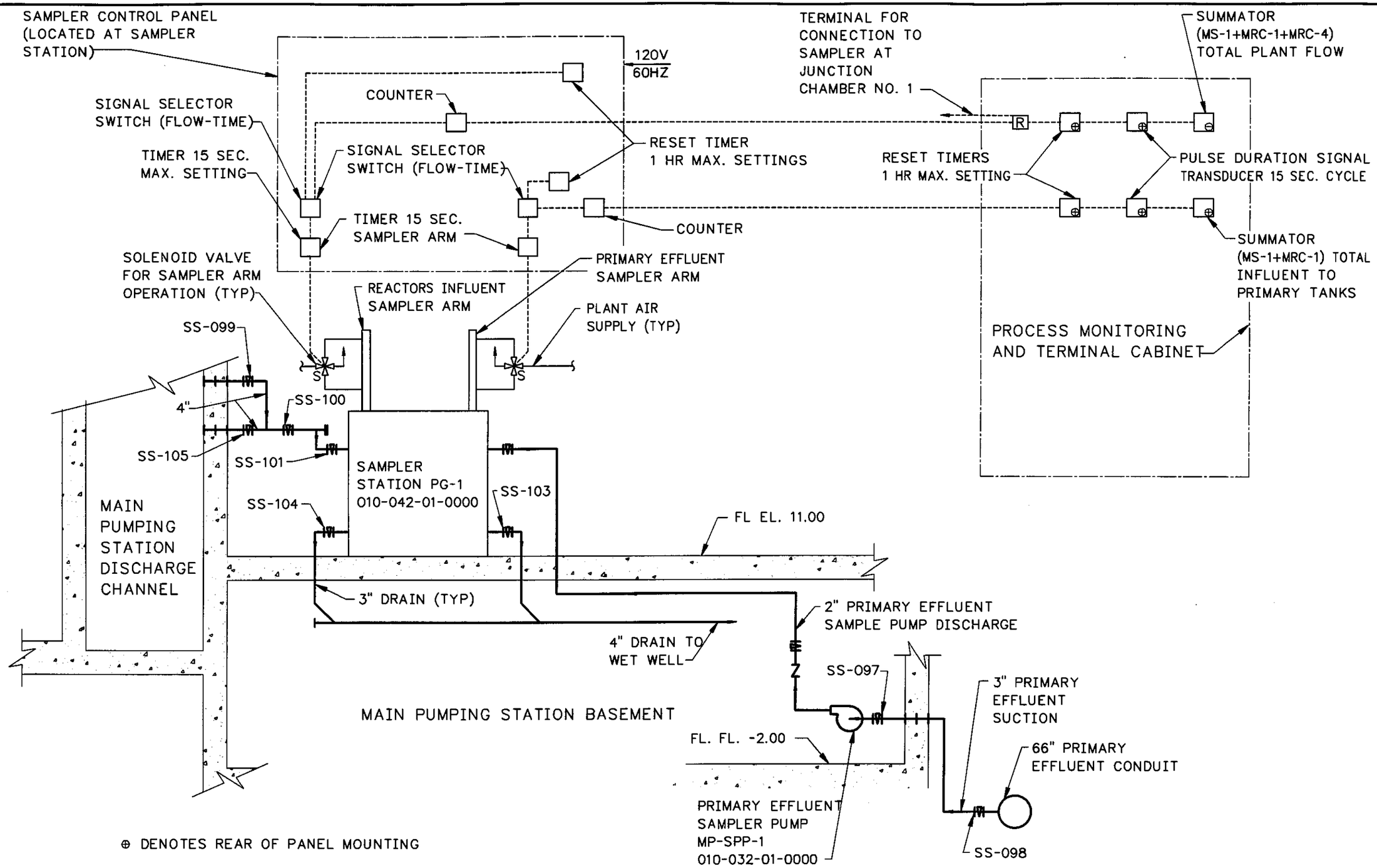

FILE: OB-MP-11 1:1 02/26/99 13:57 GH-E

GREELEY AND HANSEN ENGINNERS

FIGURE III-OB-MPS-11
SEWAGE SAMPLING DIAGRAM

FIGURE III-OB-MPS-11
SEWAGE SAMPLING DIAGRAM

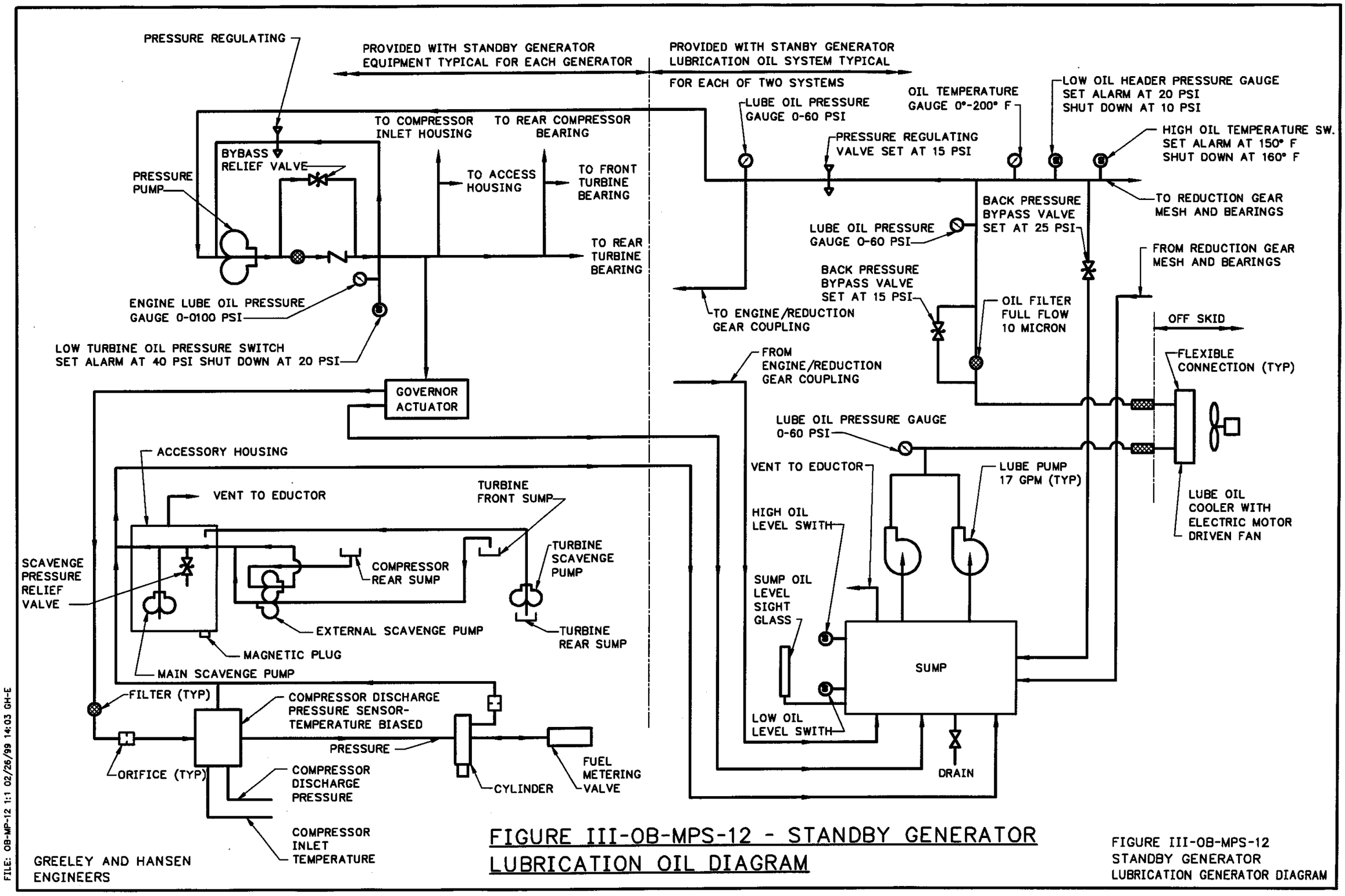

FIGURE III-OB-MPS-12 - STANDBY GENERATOR LUBRICATION OIL DIAGRAM

FIGURE III-OB-MPS-12
STANDBY GENERATOR
LUBRICATION GENERATOR DIAGRAM

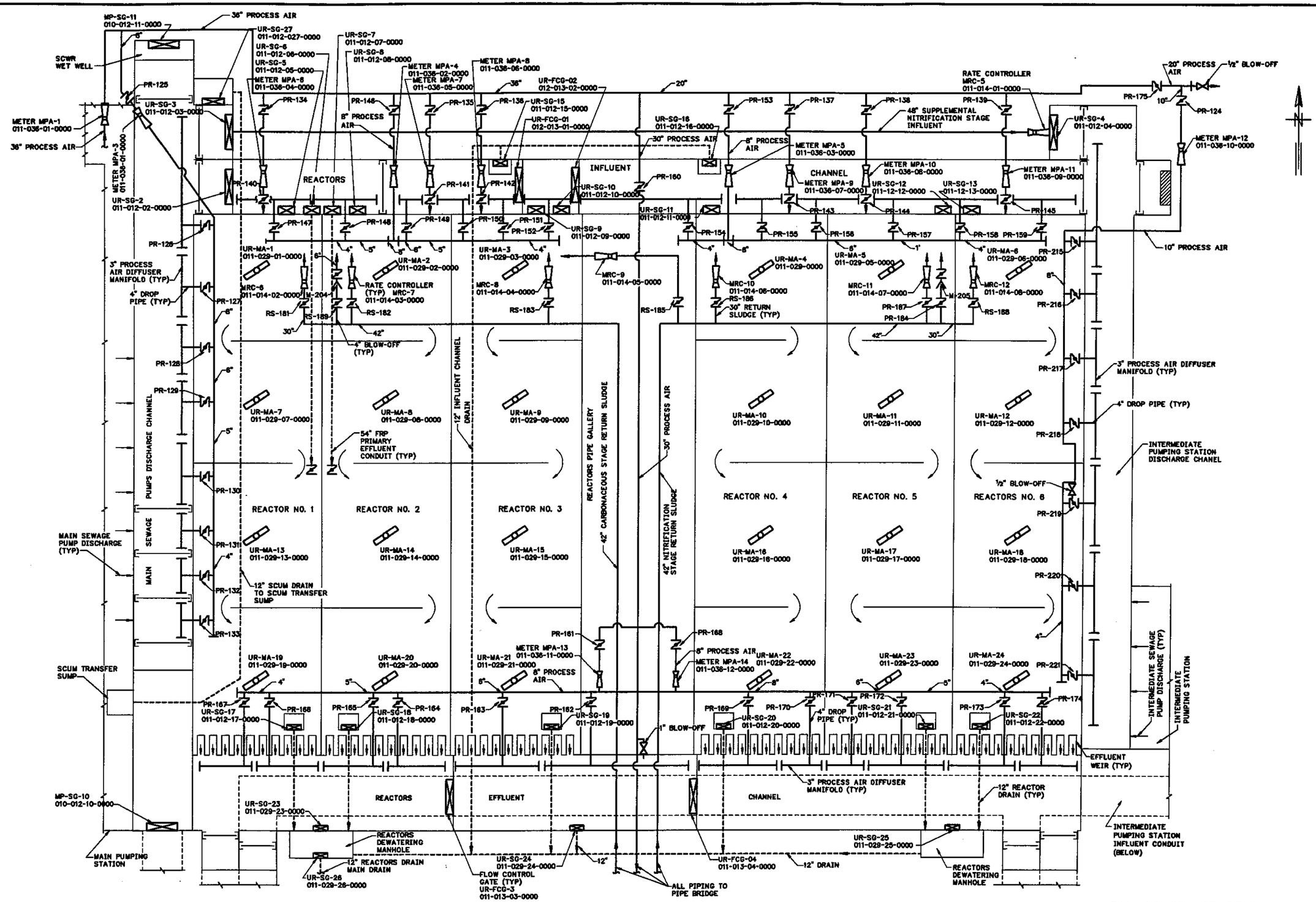

GREELEY AND HANSEN ENGINEERS

FIGURE III-OB-OR-1 HPO REACTORS FLOW DIAGRAM

FIGURE III-OB-OR-1
HPO REACTORS FLOW DIAGRAM

FILE: OB-OR-1 1:1 02/26/99 14:08 GH-E

PARALLEL MODE

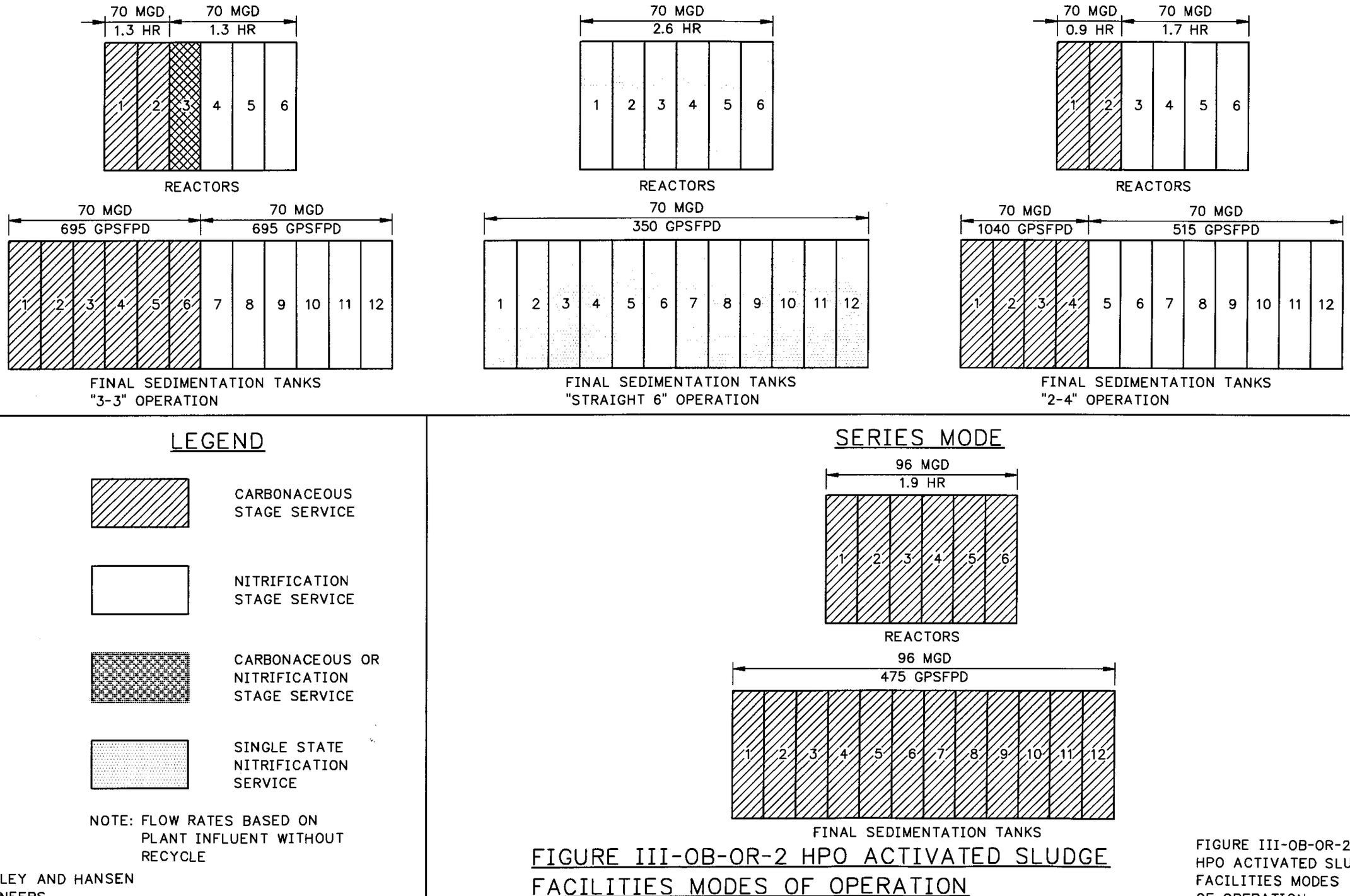

GREELEY AND HANSEN
ENGINEERS

FILE: OB-OR-2 1:1 02/26/99 14:15 GH-E

FIGURE III-OB-OR-2 HPO ACTIVATED SLUDGE FACILITIES MODES OF OPERATION

FIGURE III-OB-OR-2
HPO ACTIVATED SLUDGE
FACILITIES MODES
OF OPERATION

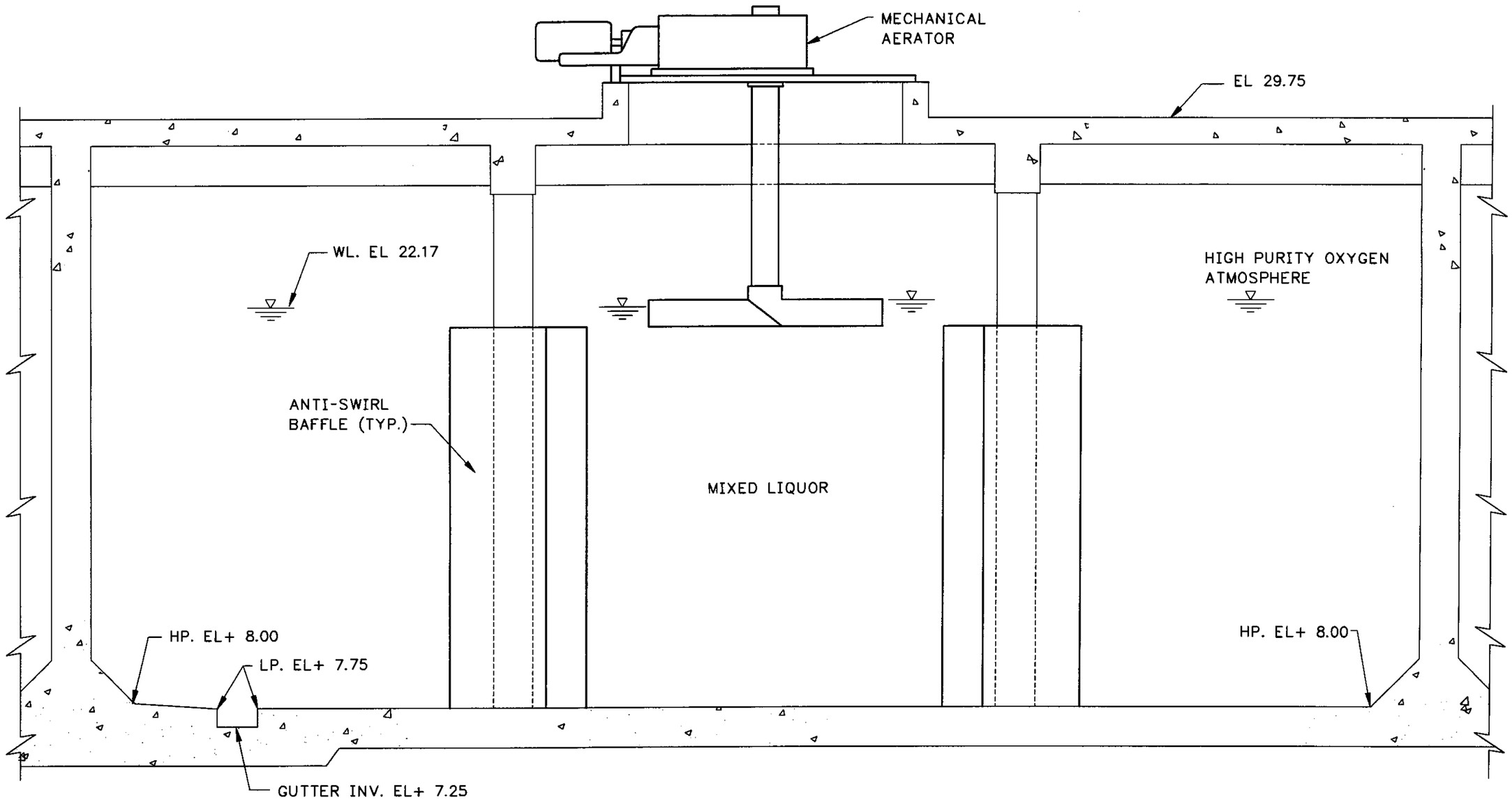

FIGURE III-OB-OR-3
HPO REACTOR CROSS SECTION

GREELEY AND HANSEN
ENGINEERS

FILE: OB-OR-3 1:1 02/26/99 14:20 GH-E

FIGURE III-OB-OR-3
HPO REACTOR CROSS SECTION

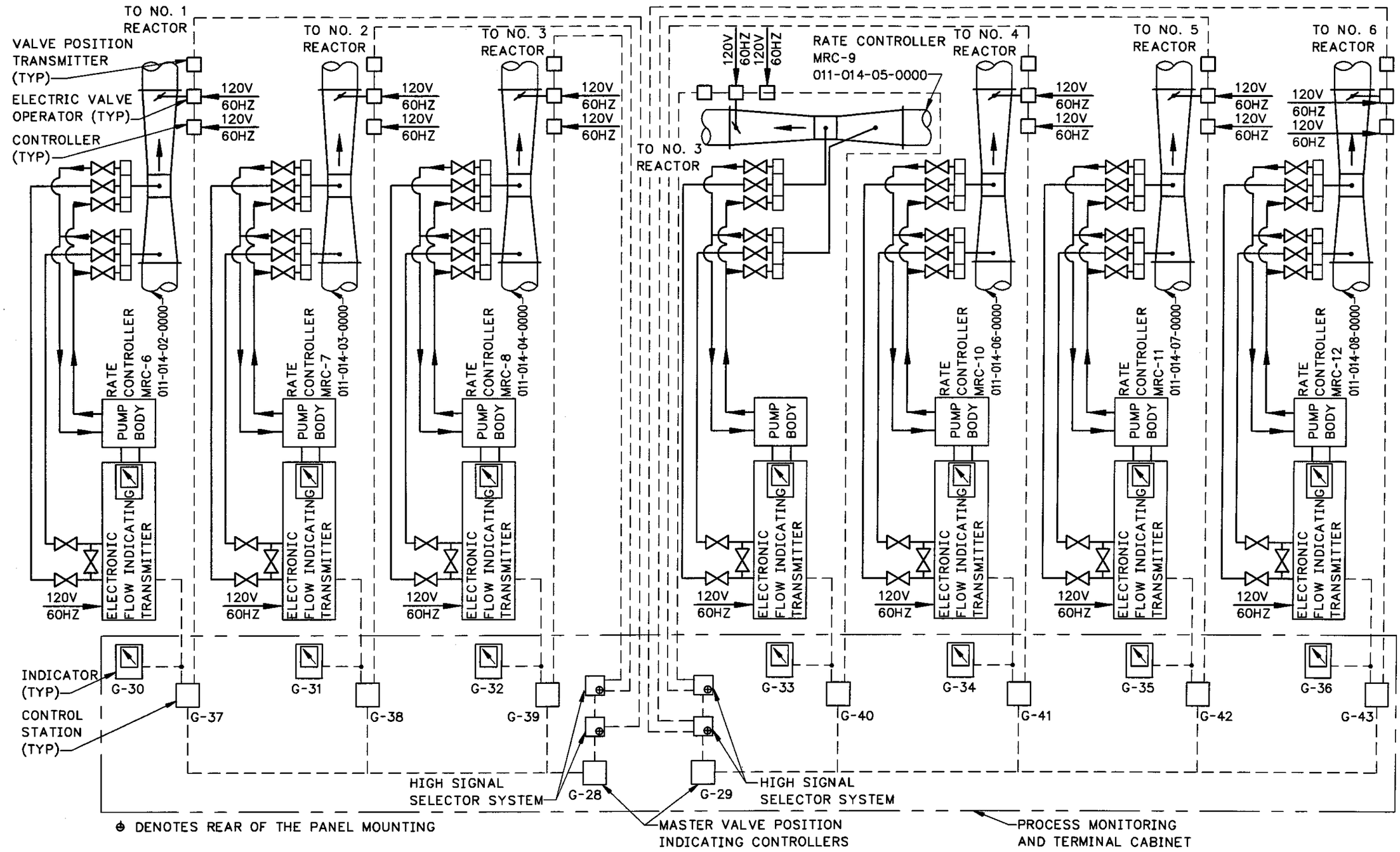

FILE: OB-OR-4 1:1 02/26/99 14:46 GH-E

GREELEY AND HANSEN ENGINEERS

FIGURE III-OB-OR-4 RATE CONTROLLERS MRC-6,7,8,9,10,11 & 12 DIAGRAM

FIGURE III-OB-OR-4 RATE CONTROLLERS MRC-6, 7,8,9,10,11 & 12 DIAGRAM

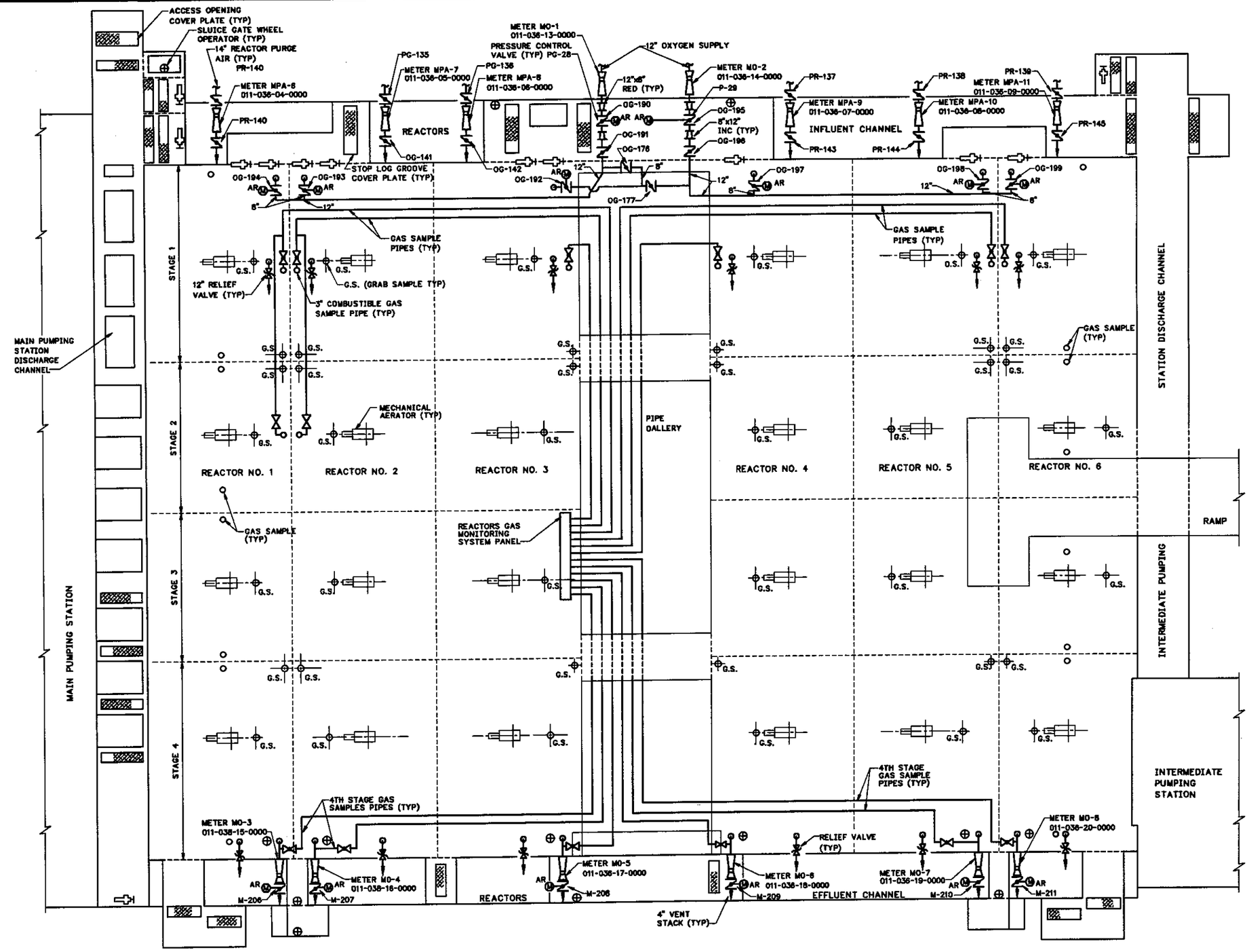

FIGURE III-OB-OR-5 HPO REACTORS OXYGEN PURITY CONTROL DIAGRAM

FIGURE III-OB-OR-5
HPO REACTORS OXYGEN
PURITY CONTROL DIAGRAM

GREELEY AND HANSEN
ENGINEERS

FILE: OB-OR-5 1:1 02/26/99 14:52 GH-E

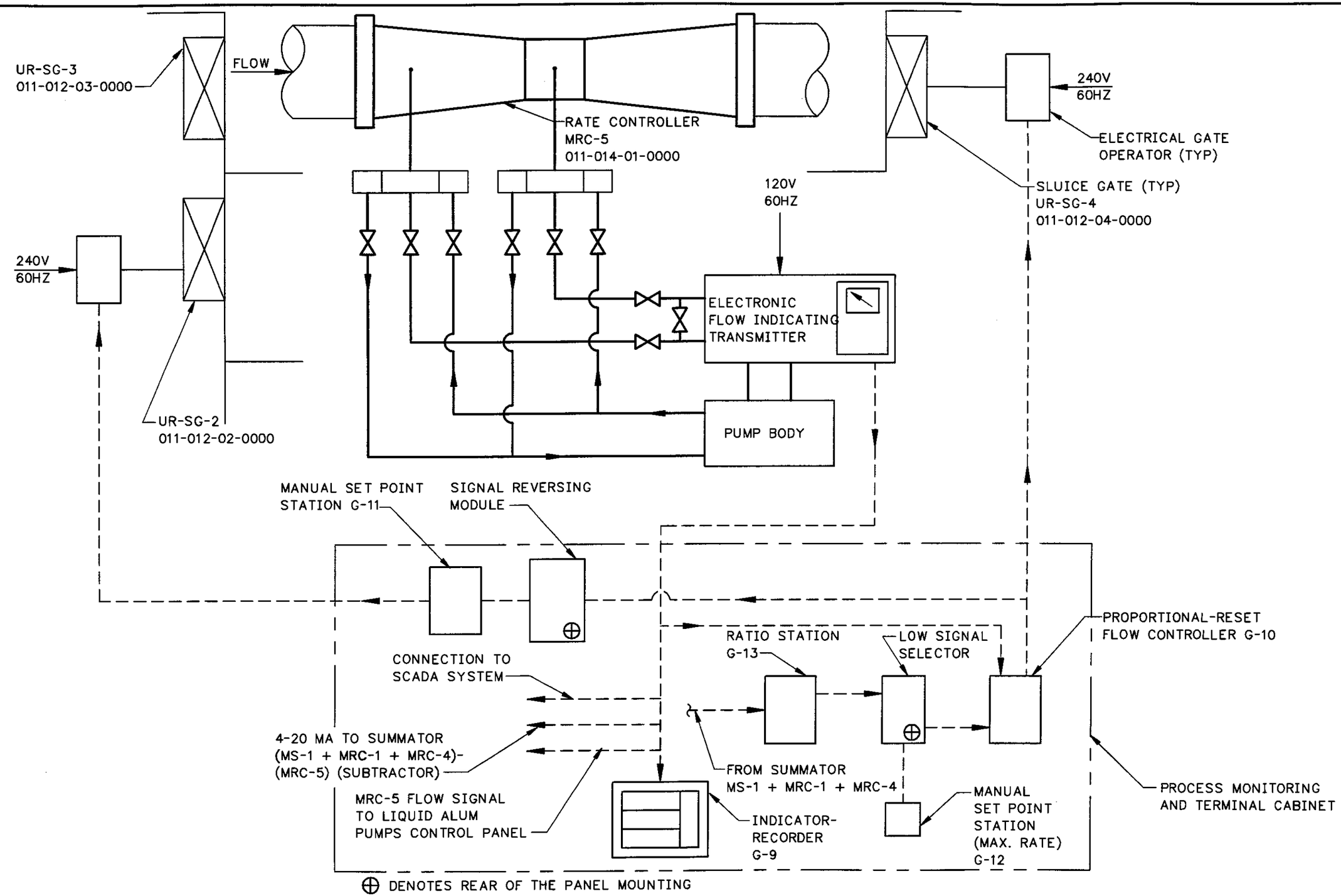

FIGURE III-OB-OR-6 RATE CONTROLLER MRC-5 DIAGRAM

GREELEY AND HANSEN ENGINEERS

FILE: OB-OR-6 1:1 02/26/99 15:09 GH-E

FIGURE III-OB-OR-6
RATE CONTROLLER
MRC-5 DIAGRAM

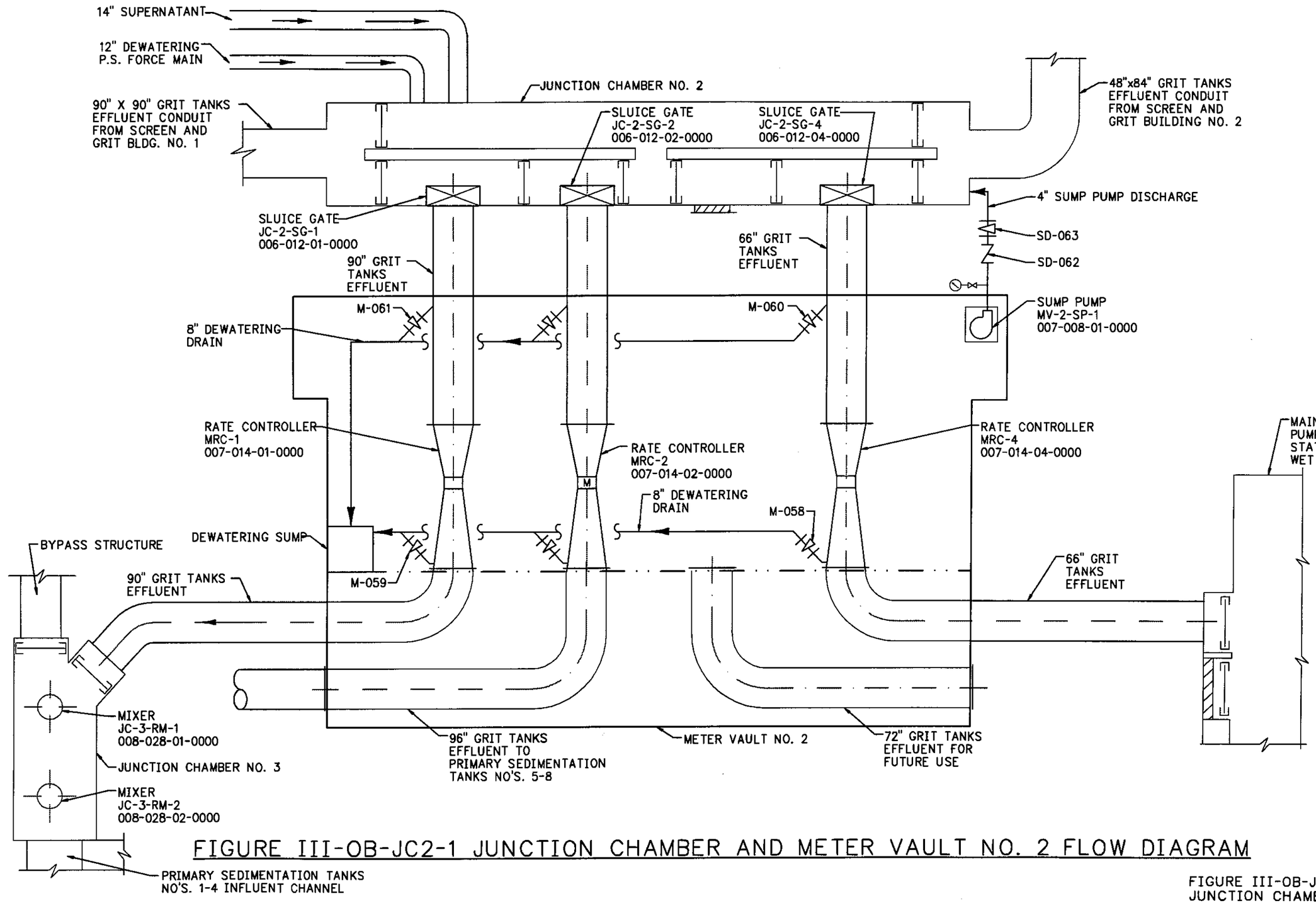

FIGURE III-OB-JC2-1 JUNCTION CHAMBER AND METER VAULT NO. 2 FLOW DIAGRAM

FILE: OB-JC2-1 1:1 02/26/99 11:15 GH-E

GREELEY AND HANSEN ENGINEERS
FALLER, DAVIS & ASSOCIATES

FIGURE III-OB-JC2-1
JUNCTION CHAMBER AND METER VAULT NO. 2 FLOW DIAGRAM

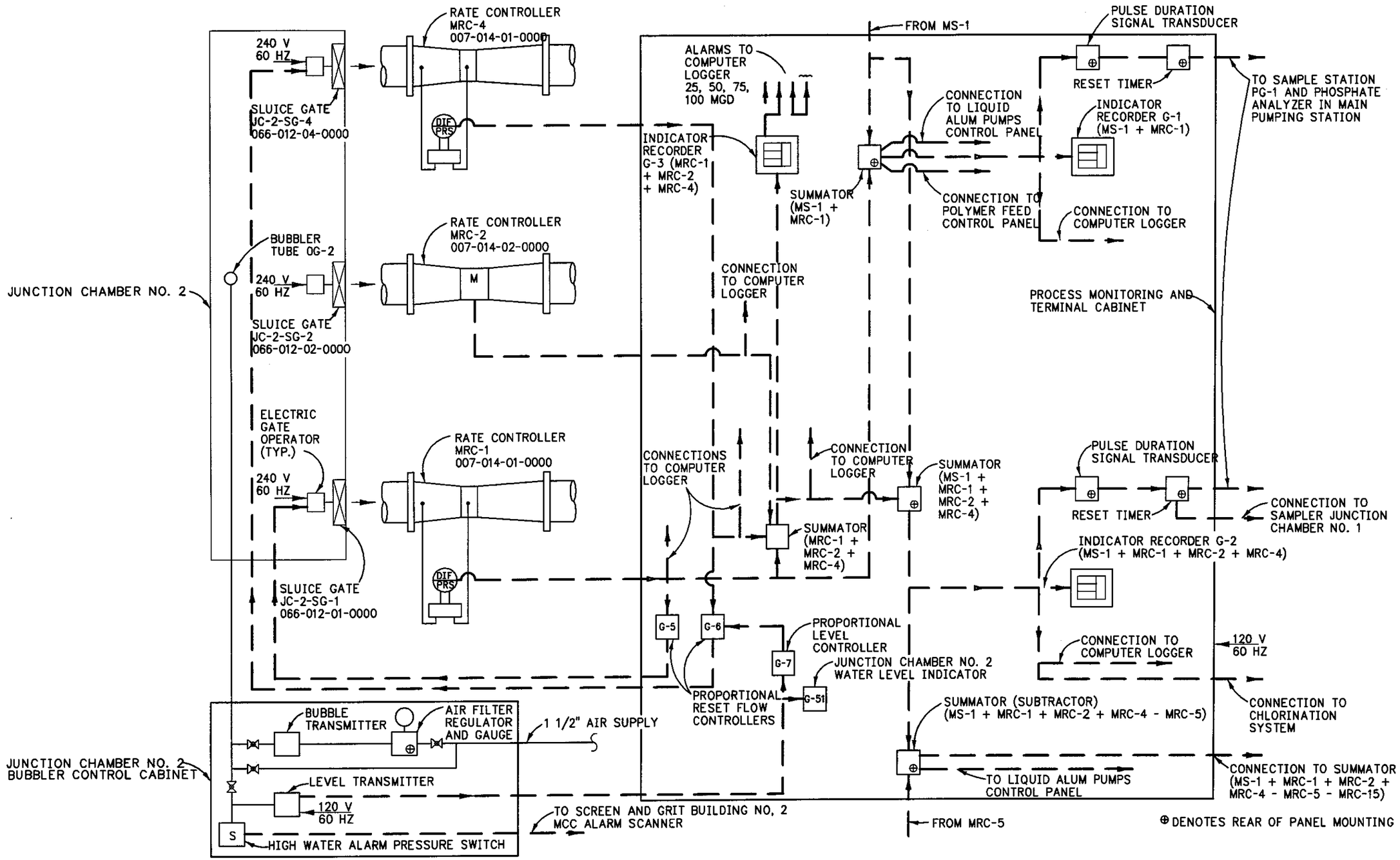

FIGURE III-OB-JC2-2 RATE CONTROLLERS MRC-1, MRC-2 AND MRC-4 DIAGRAM

GREELEY AND HANSEN ENGINEERS
FALLER, DAVIS & ASSOCIATES

FIGURE III-OB-JC2-2
RATE CONTROLLERS
MRC-1, MRC-2 AND
MRC-4 DIAGRAM

FILE: OB-JC2-2 1:1 02/26/99 11:25 GH-E

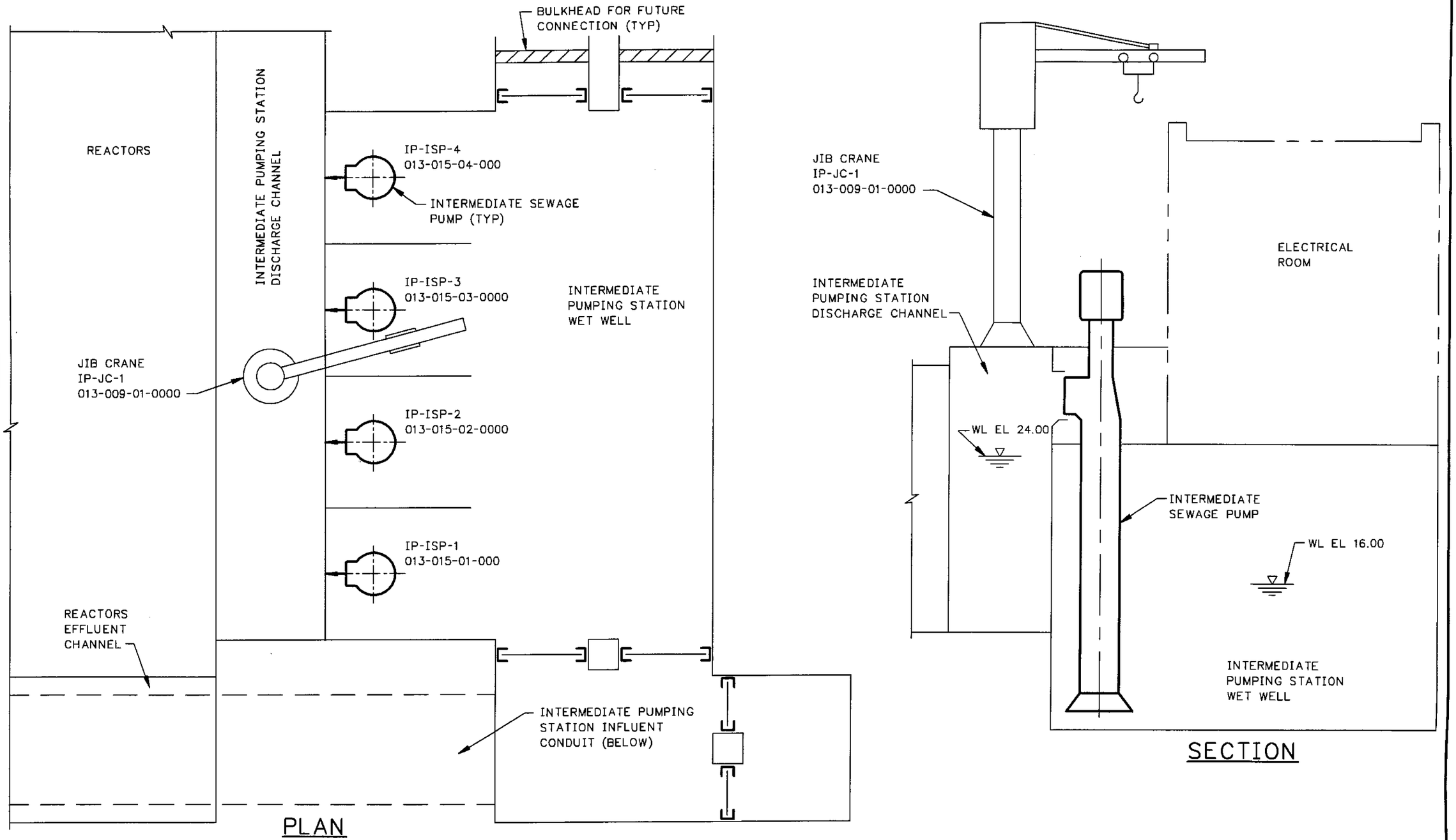

FIGURE III-OB-IPS-1
INTERMEDIATE PUMPING STATION - PLAN AND SECTION

GREELEY AND HANSEN
ENGINEERS

FIGURE III-OB-IPS-1
INTERMEDIATE PUMPING STATION
PLAN AND SECTION

FILE: OB-IPS-1 1:1 02/26/99 15:14 GH-E

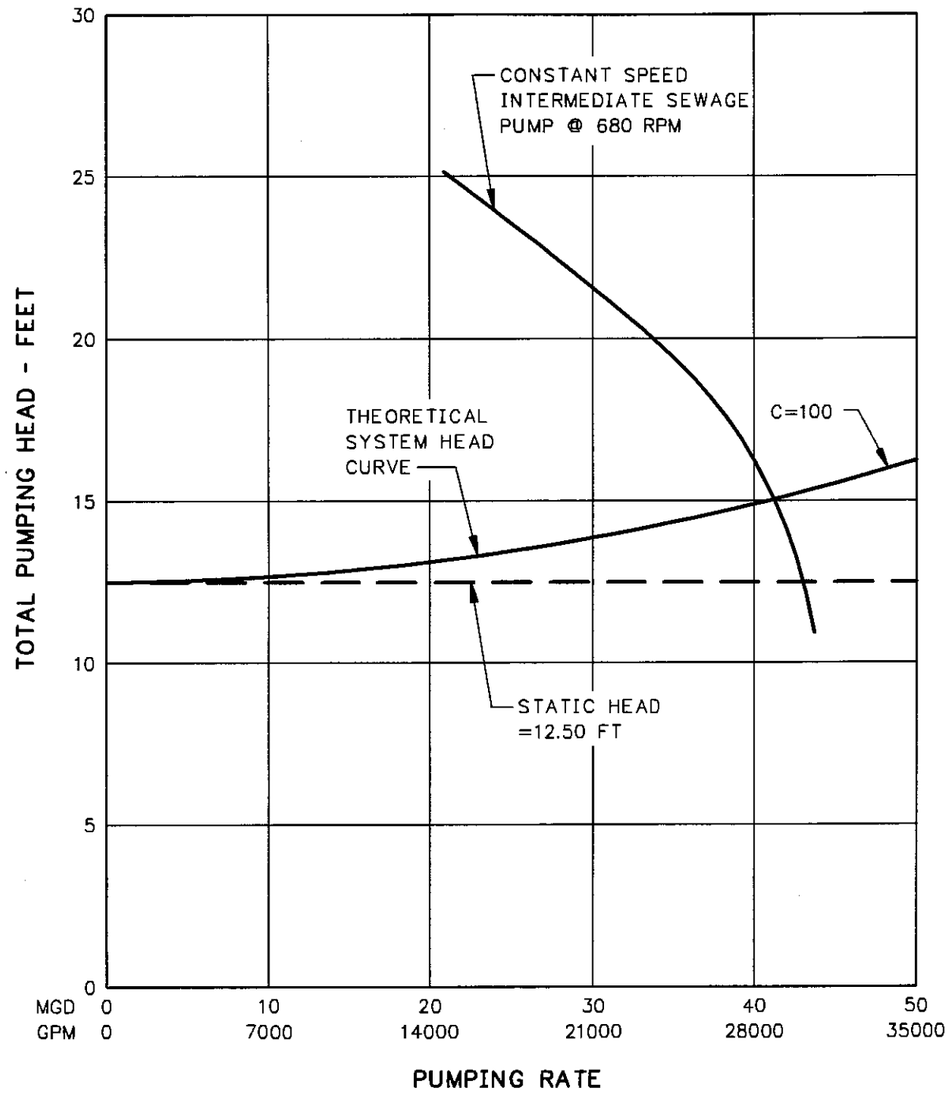

FIGURE III-OB-IPS-2
CONSTANT SPEED INTERMEDIATE
SEWAGE PUMP DISCHARGE CURVES

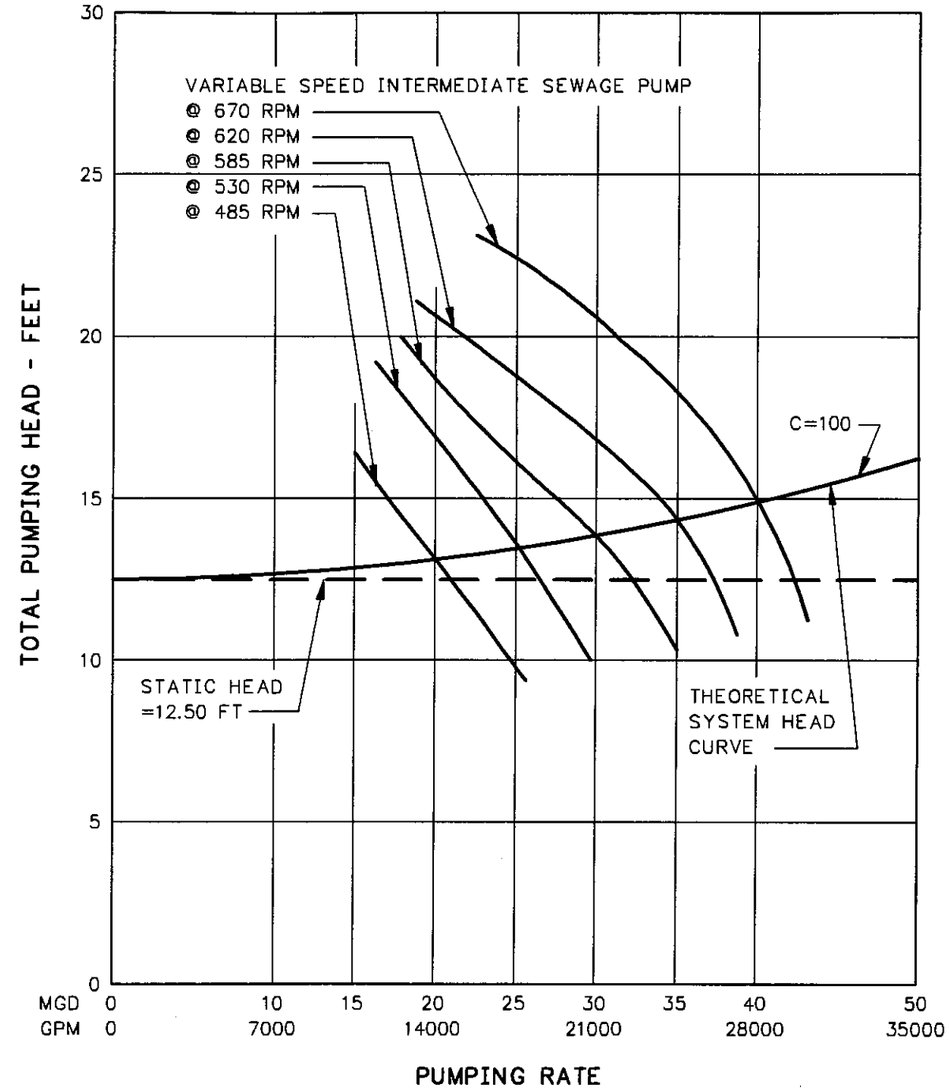

FIGURE III-OB-IPS-3
VARIABLE SPEED INTERMEDIATE
SEWAGE PUMP DISCHARGE CURVES

FIGURE III-OB-IPS-2. CONSTANT SPEED INTERMEDIATE SEWAGE PUMP DISCHARGE CURVES
FIGURE III-OB-IPS-3. VARIABLE SPEED INTERMEDIATE SEWAGE PUMP DISCHARGE CURVES

GREELEY AND HANSEN
ENGINEERS

FILE: OB-IPS-3 1:1 02/26/99 15:19 GH-E

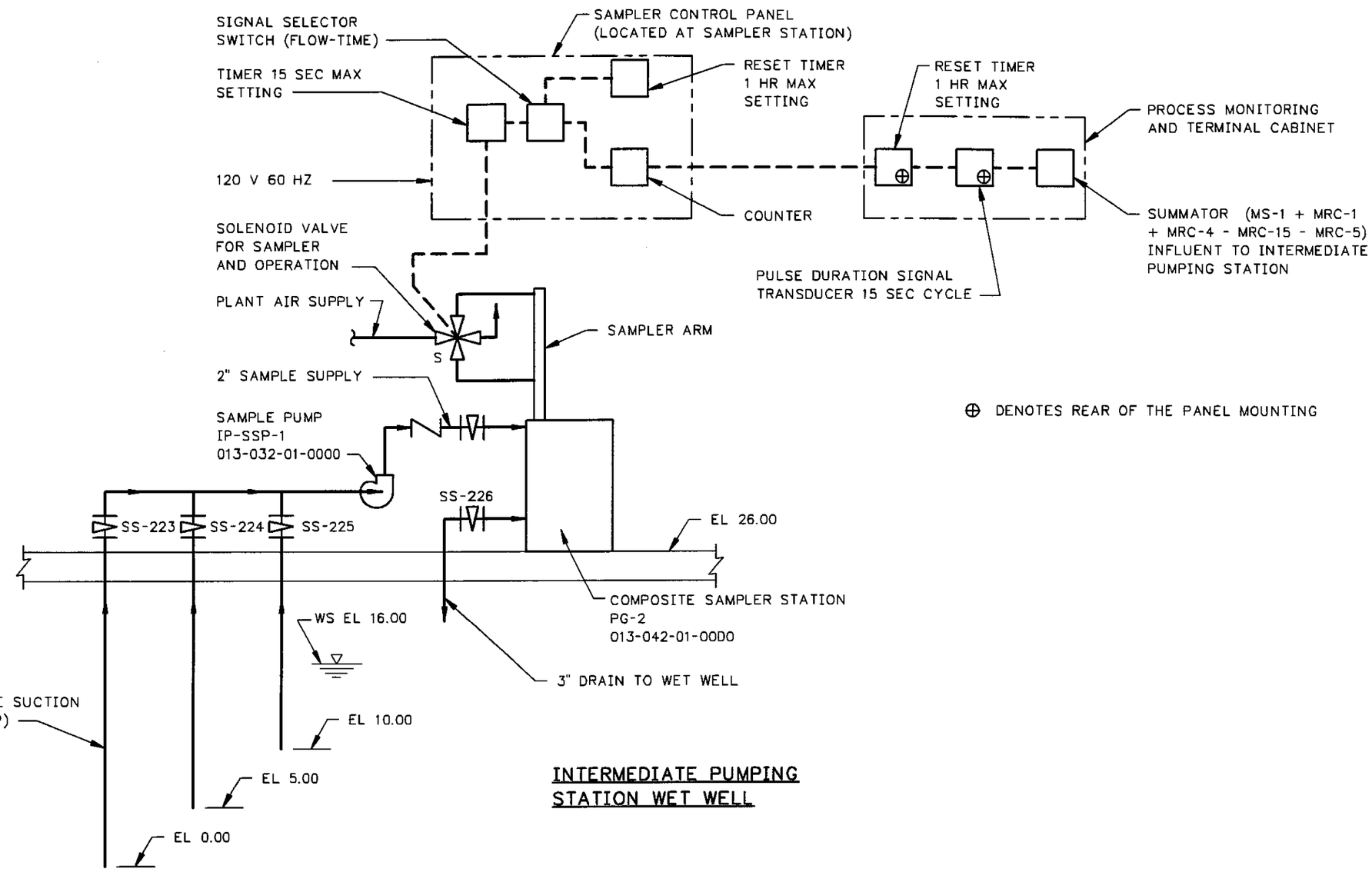

FIGURE III-OB-IPS-4
INTERMEDIATE PUMPING STATION
SEWAGE SAMPLING DIAGRAM

FILE: OB-IPS-4 1:1 02/26/99 15:39 GH-E

GREELEY AND HANSEN
ENGINEERS

FIGURE III-OB-IPS-4
INTERMEDIATE PUMPING STATION
SEWAGE SAMPLING DIAGRAM

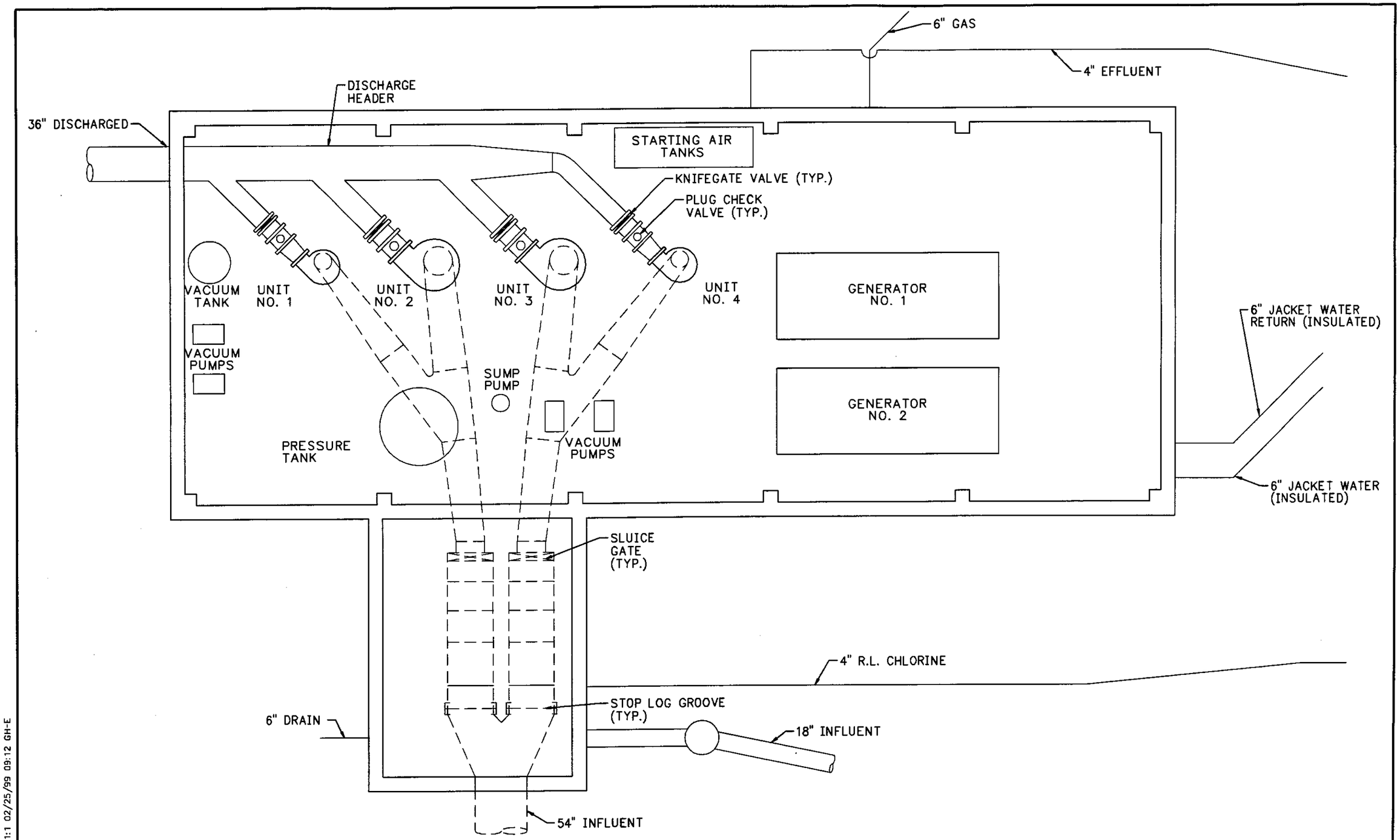

FIGURE III-PO-RSP-1 RAW SEWAGE PUMPING STATION SCHEMATIC

GREELEY AND HANSEN ENGINEERS
FALLER, DAVIS & ASSOCIATES

FIGURE III-PO-RSP-1
RAW SEWAGE PUMPING
STATION SCHEMATIC

FILE: PO-RSP-1 1:1 02/25/99 09:12 GH-E

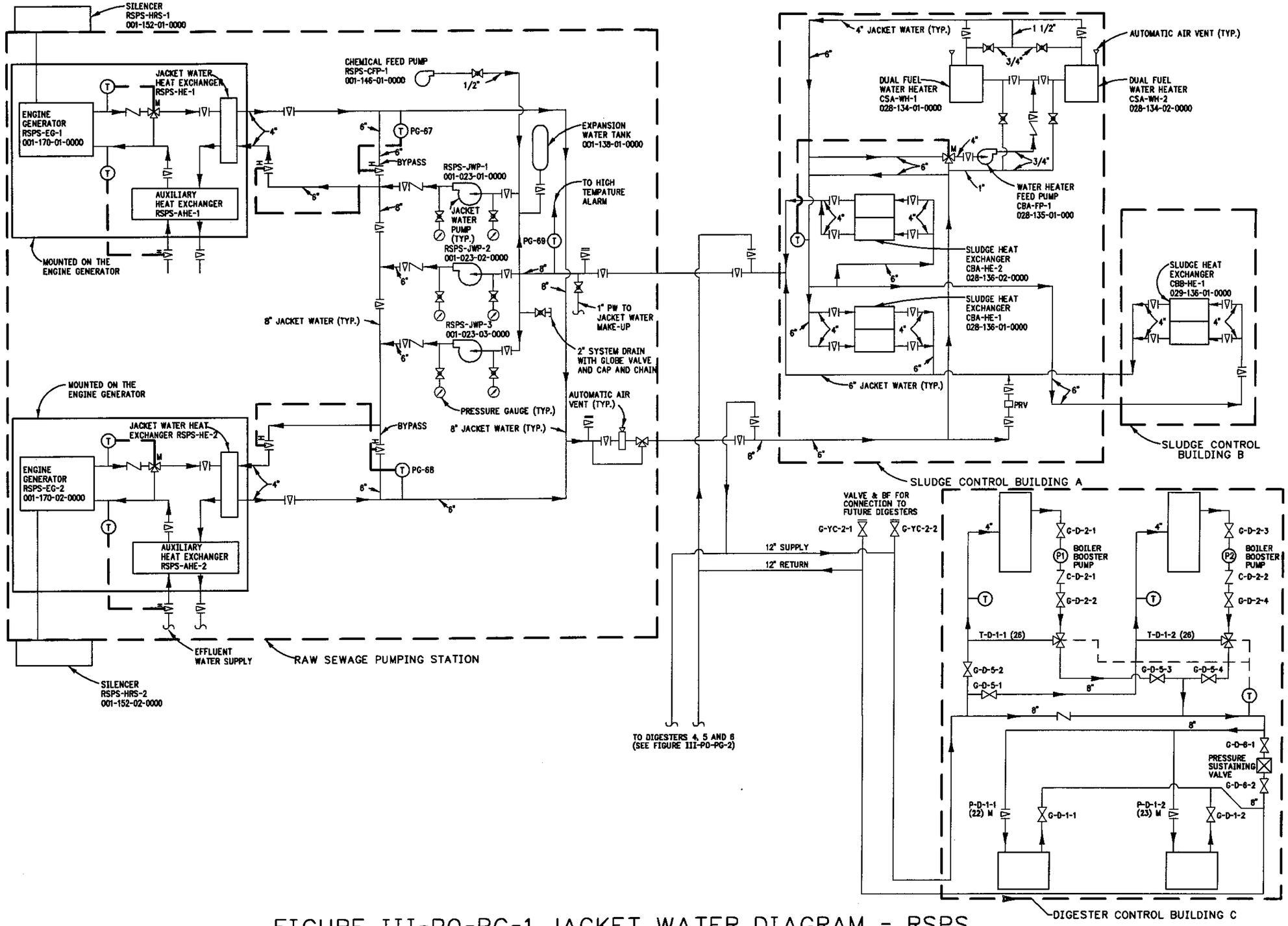

FIGURE III-PO-PG-1 JACKET WATER DIAGRAM - RSPS

GREELEY AND HANSEN ENGINEERS
FALLER, DAVIS & ASSOCIATES

FIGURE III-PO-PG-1
JACKET WATER DIAGRAM
RSPS

FILE: PO-PG-1 1:1 02/25/99 10:09 GH-E

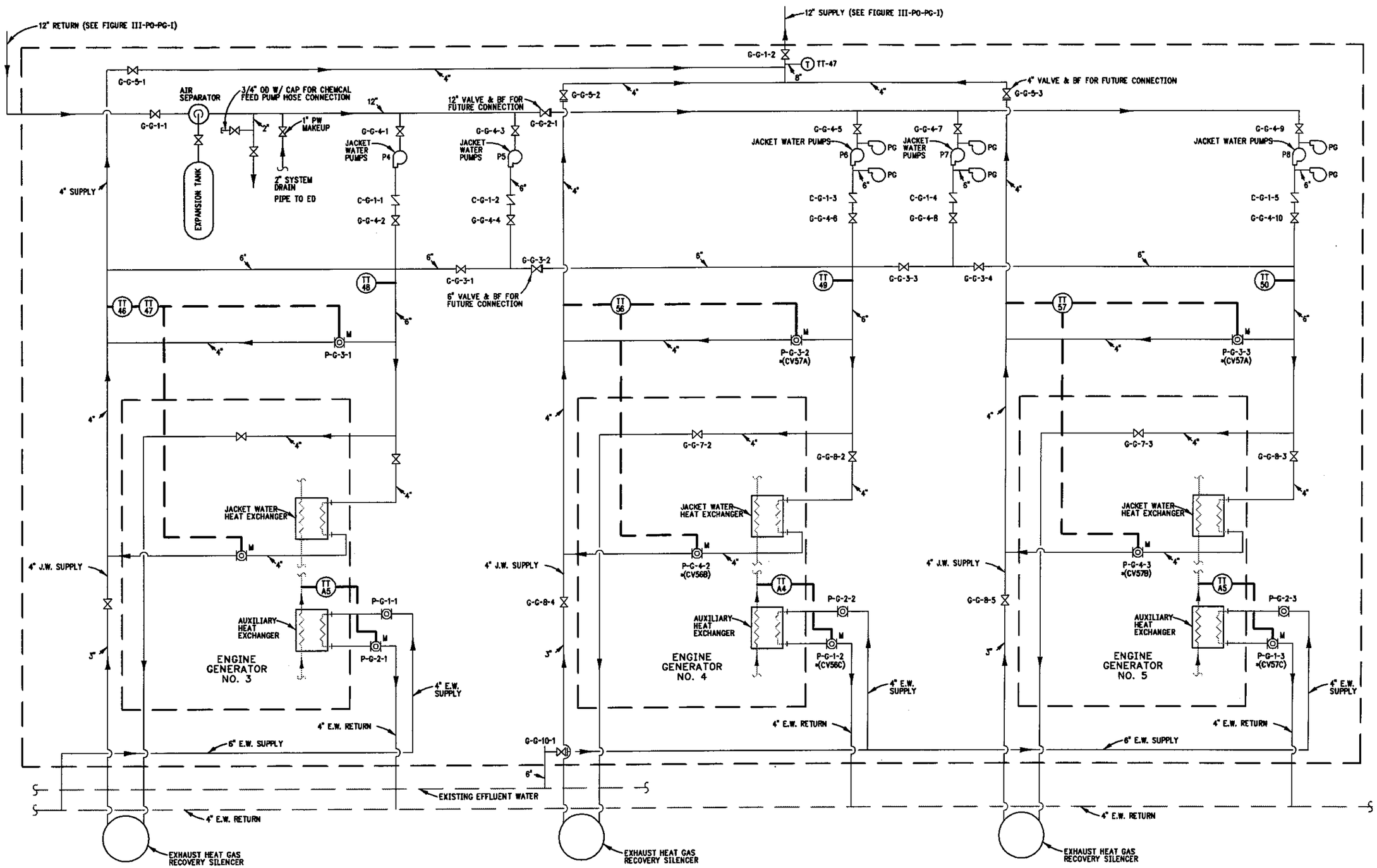

FIGURE III-PO-PG-2 JACKET WATER DIAGRAM

GREELEY AND HANSEN ENGINEERS
FALLER, DAVIS & ASSOCIATES

FIGURE III-PO-PG-2
JACKET WATER DIAGRAM

FILE: PO-PG-2 1:1 02/25/99 10:24 GH-E

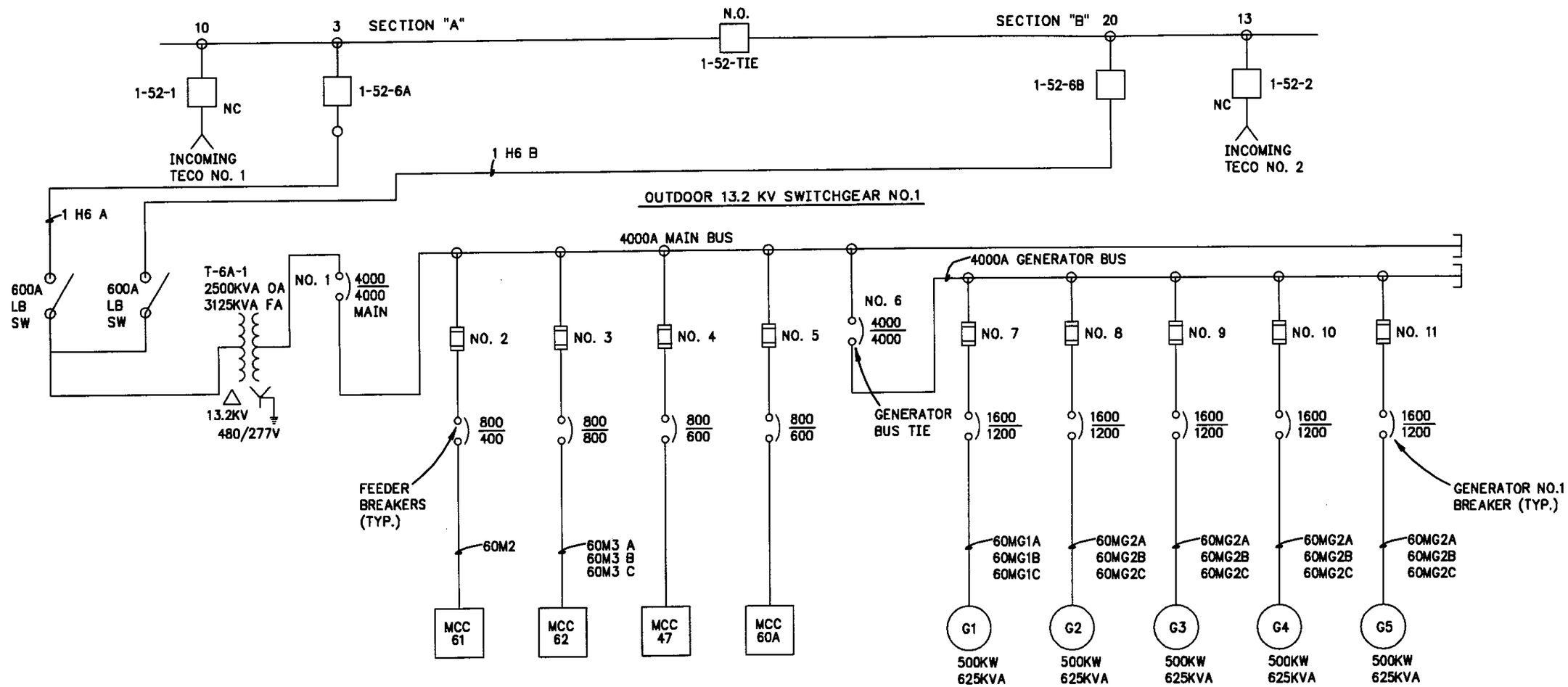

FIGURE III-PO-PG-3 OUTDOOR SECONDARY SUBSTATION NO. 60 ONE LINE DIAGRAM

FILE: PO-PG-3 1:1 02/25/99 10:42 GH-E

GREELEY AND HANSEN ENGINEERS
FALLER, DAVIS & ASSOCIATES

FIGURE III-PO-PG-3
OUTDOOR SECONDARY
SUBSTATION NO. 60
ONE LINE DIAGRAM

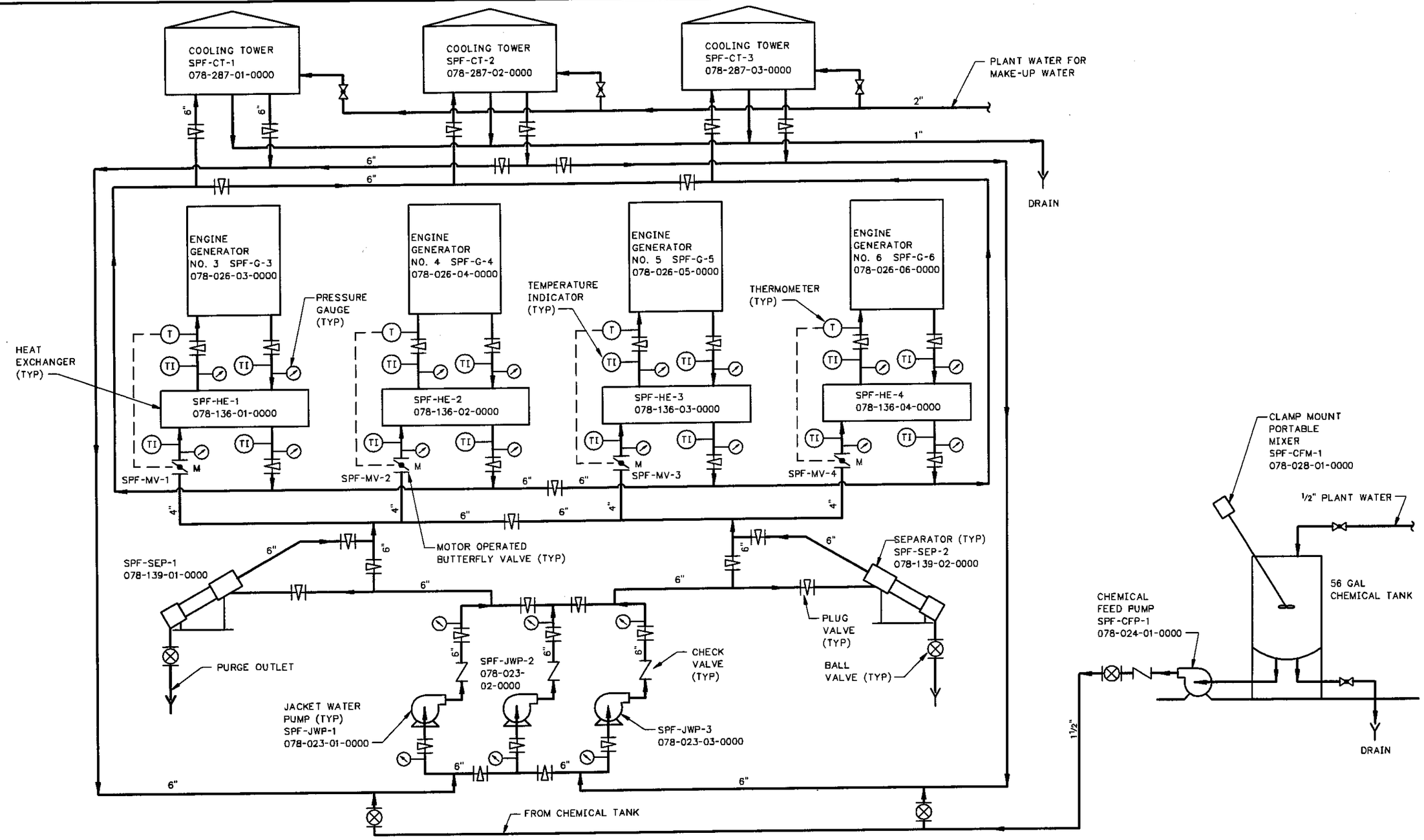

FIGURE III-PO-SPF-1 - STANDBY GENERATOR EXTERNAL ENGINE WASTE HEAT COOLING SYSTEM DIAGRAM

GREELEY AND HANSEN
ENGINEERS

FIGURE III-PO-SPF-1
STANDBY GENERATOR EXTERNAL ENGINE
WASTE HEAT COOLING SYSTEM DIAGRAM

FILE: PO-SPF-1 1:1 02/25/99 10:55 GH-E

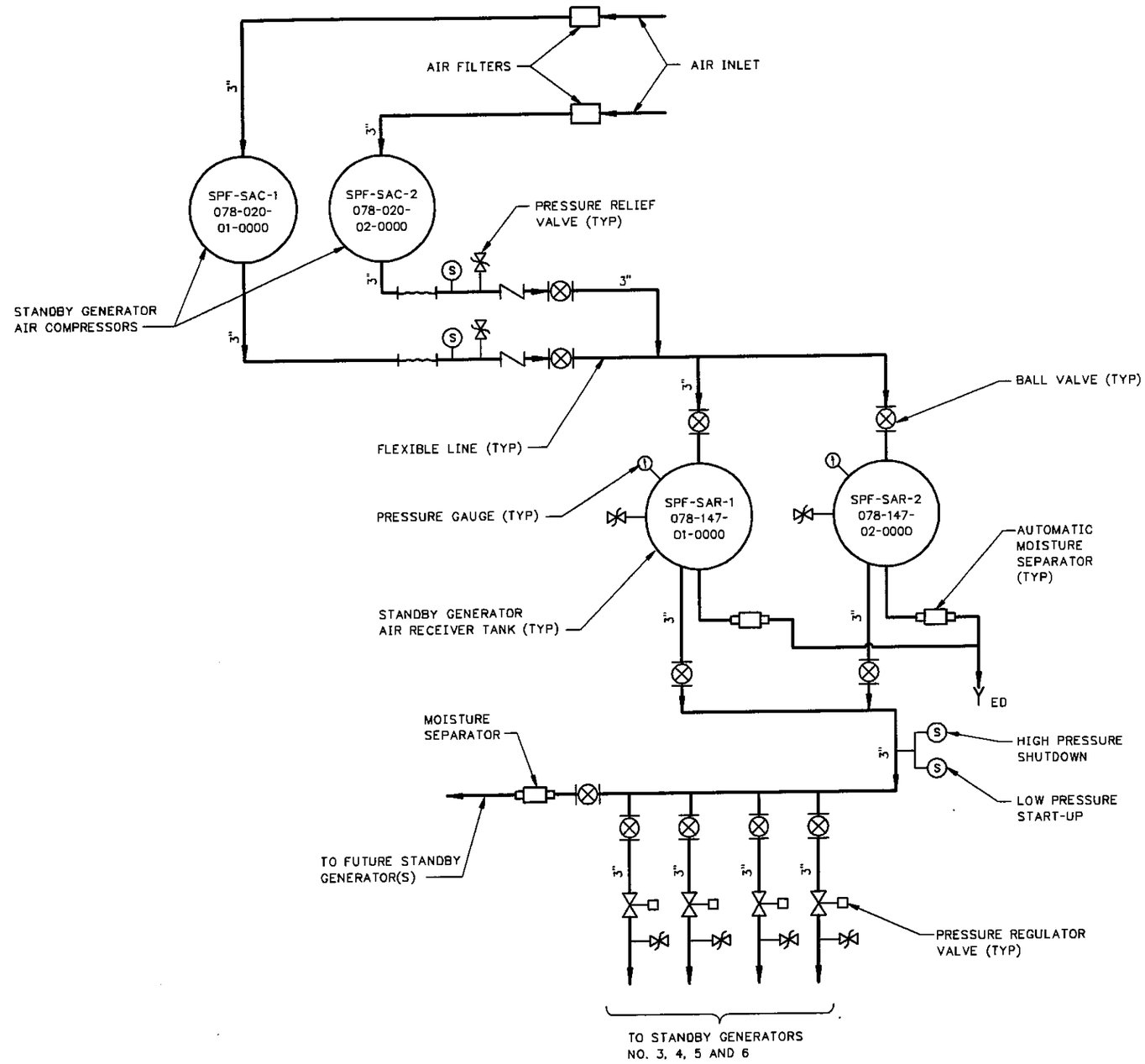

FIGURE III-PO-SPF-2 -STANDBY GENERATOR AIR DIAGRAM

FILE: PO-SPF-2 1:1 02/25/99 11:03 GH+E

GREELEY AND HANSEN
ENGINEERS

FIGURE III-PO-SPF-2
STANDBY GENERATOR
AIR DIAGRAM

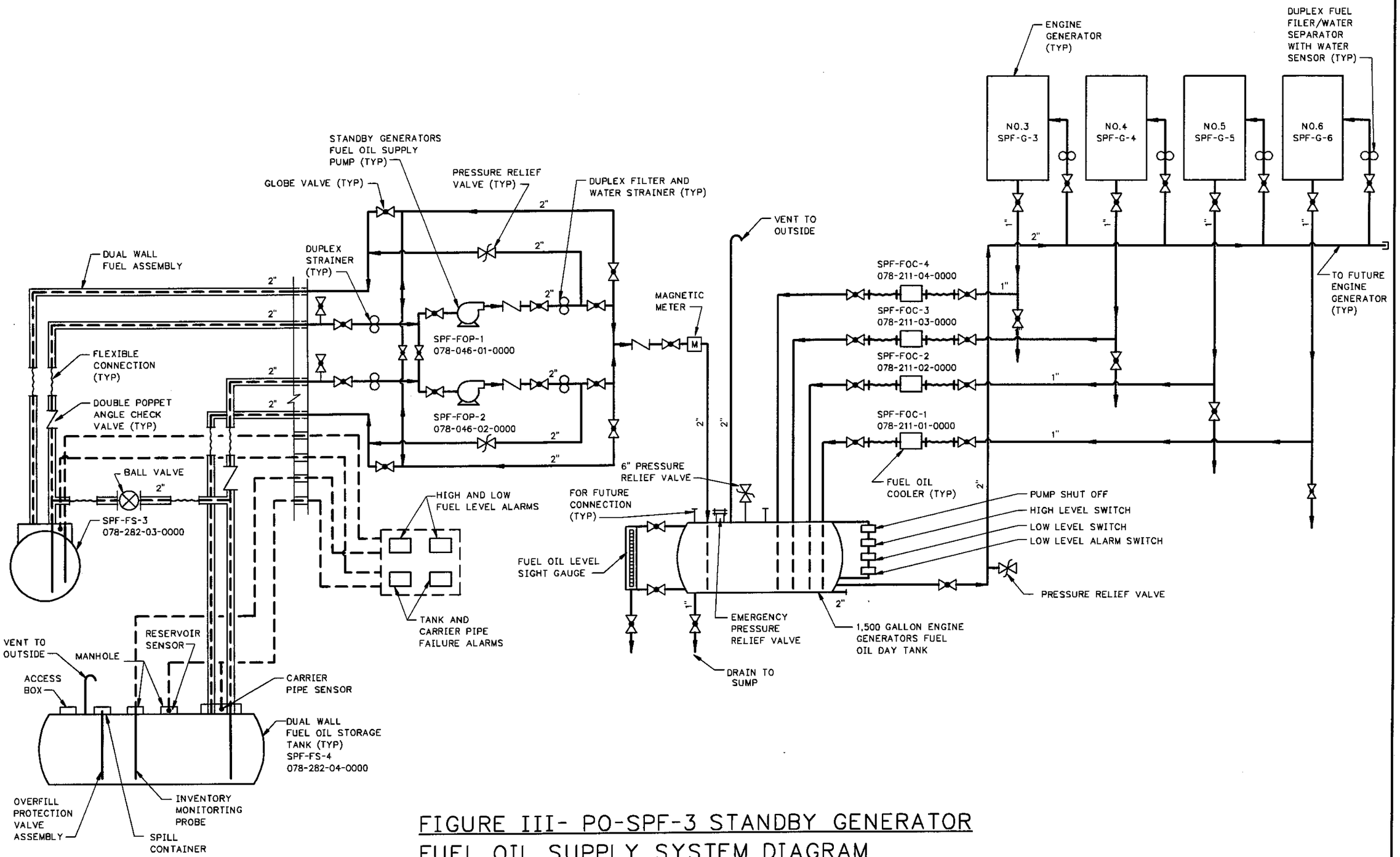

FIGURE III- PO-SPF-3 STANDBY GENERATOR FUEL OIL SUPPLY SYSTEM DIAGRAM

FILE: PO-SPF-3 1:1 02/25/99 11:21 GH-E

GREELEY AND HANSEN ENGINEERS

FIGURE III-PO-SPF-3
STANDBY GENERATOR
FUEL OIL SUPPLY SYSTEM DIAGRAM

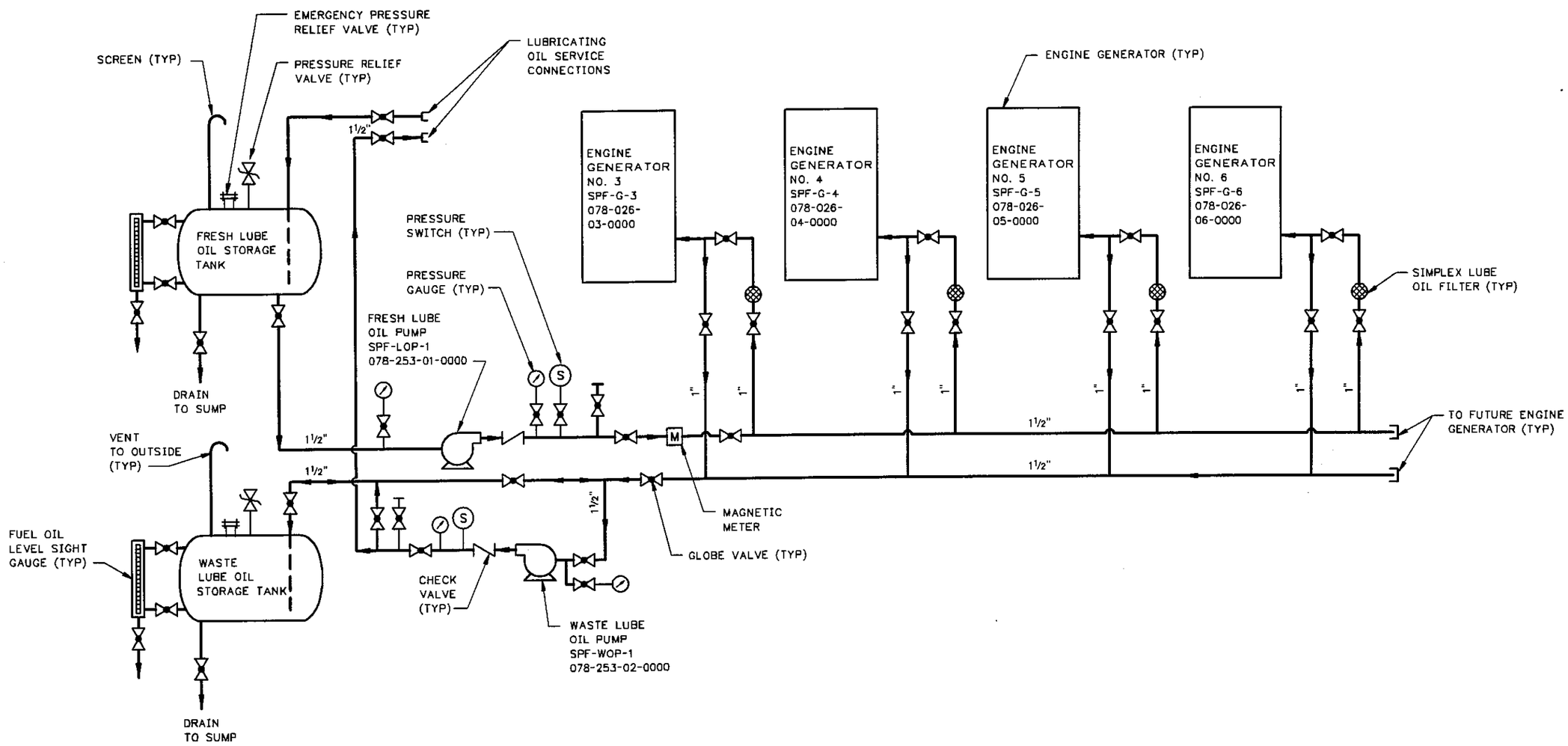

FIGURE III-PO-SPF-4 - STANDBY GENERATOR LUBRICATION OIL SUPPLY SYSTEM DIAGRAM

FILE: PO-SPF-4 1:1 02/25/99 11:28 GH-E

GREELEY AND HANSEN
ENGINEERS

FIGURE III-PO-SPF-4
STANDBY GENERATOR
LUBRICATION OIL SUPPLY SYSTEM DIAGRAM

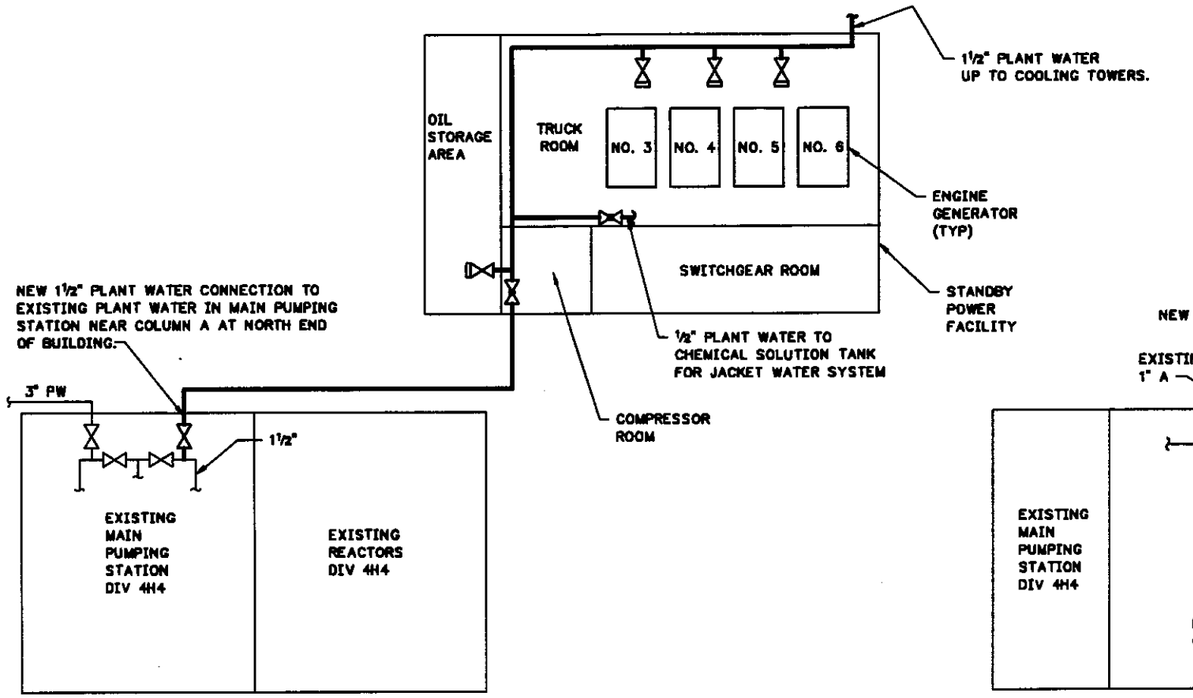

PLANT WATER DIAGRAM

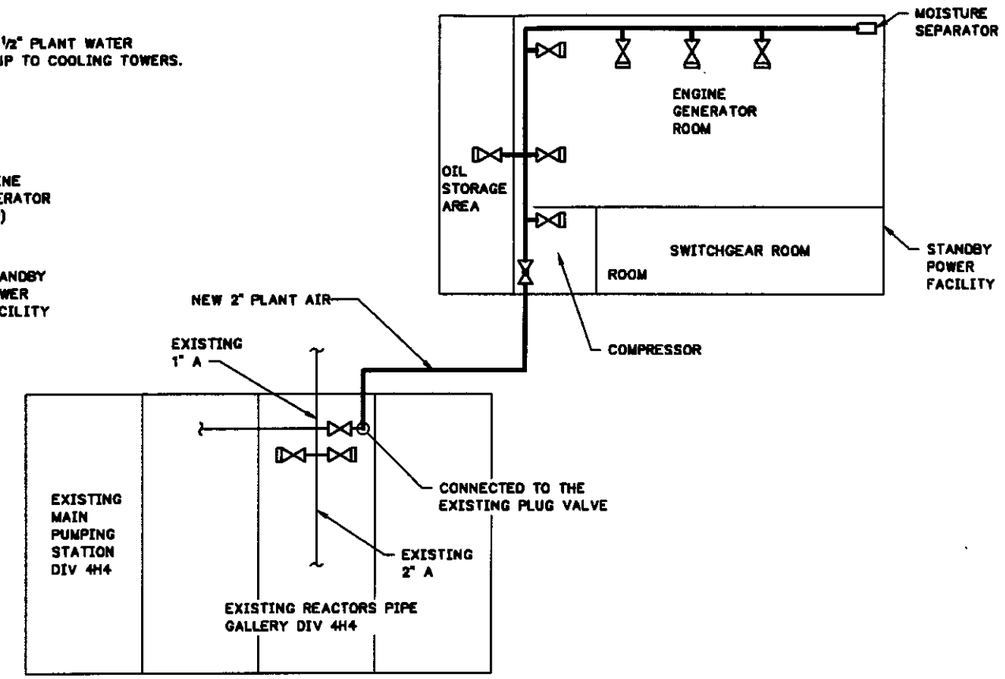

PLANT AIR DIAGRAM

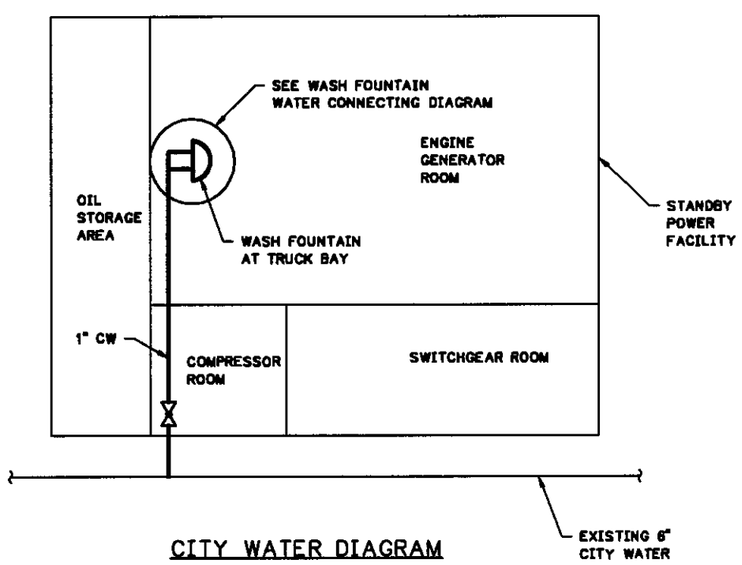

CITY WATER DIAGRAM

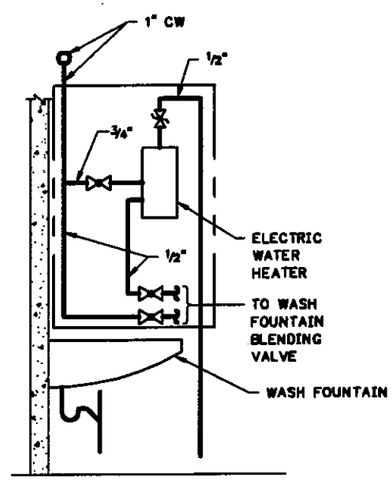

WASH FOUNTAIN WATER CONNECTING DIAGRAM

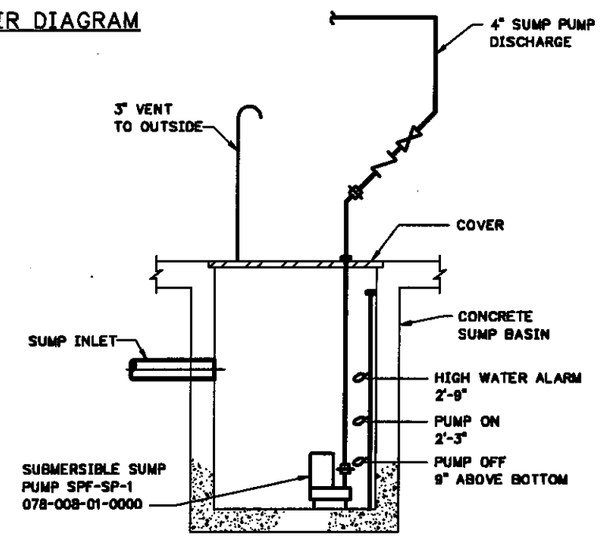

SIMPLEX SUMP PUMP DETAIL

FIGURE III-PO-SPF-5 - PLANT AIR, PLANT WATER, CITY WATER, WASH FOUNTAIN AND SUMP PUMP DIAGRAMS

GREELEY AND HANSEN ENGINEERS

FILE: PO-SPF-5 1:1 07/13/99 09:47 GH-E

FIGURE III-PO-SPF-5
STANDBY POWER FACILITY
PLANT AIR, PLANT WATER,
CITY WATER, WASH FOUNTAIN
AND SUMP PUMP DIAGRAMS

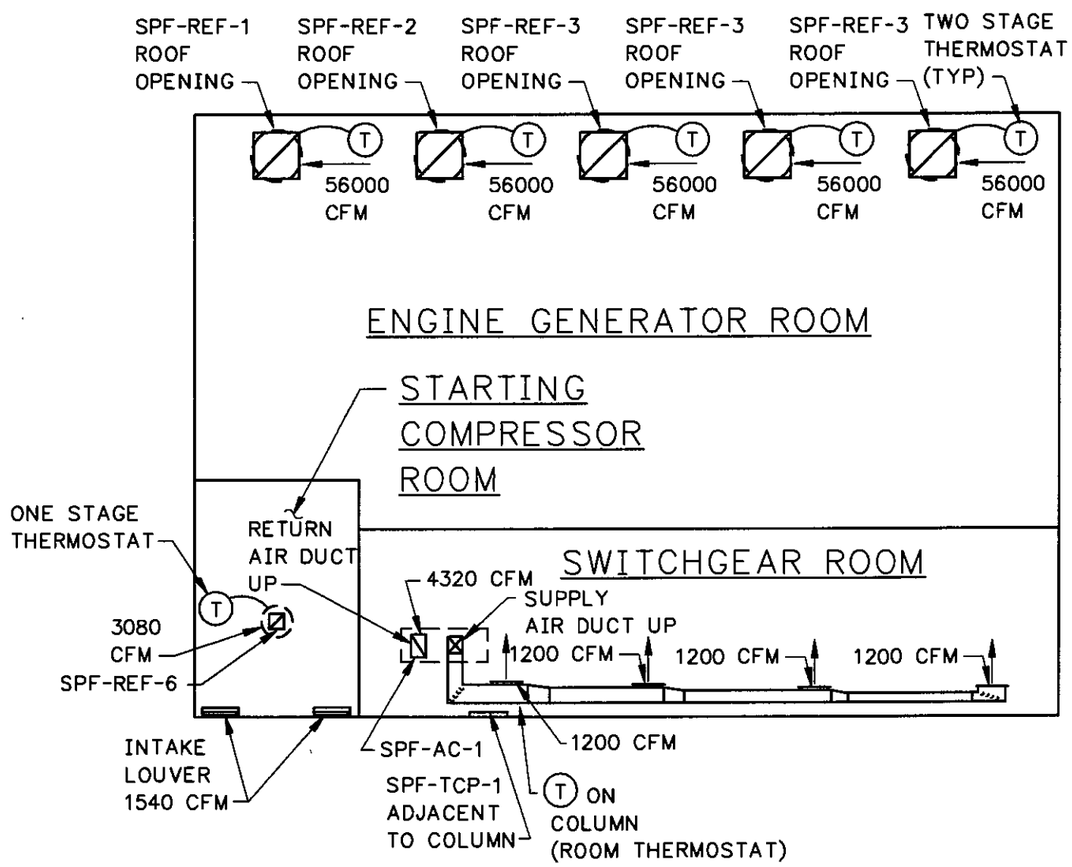

PLAN FL EL 12'-0"

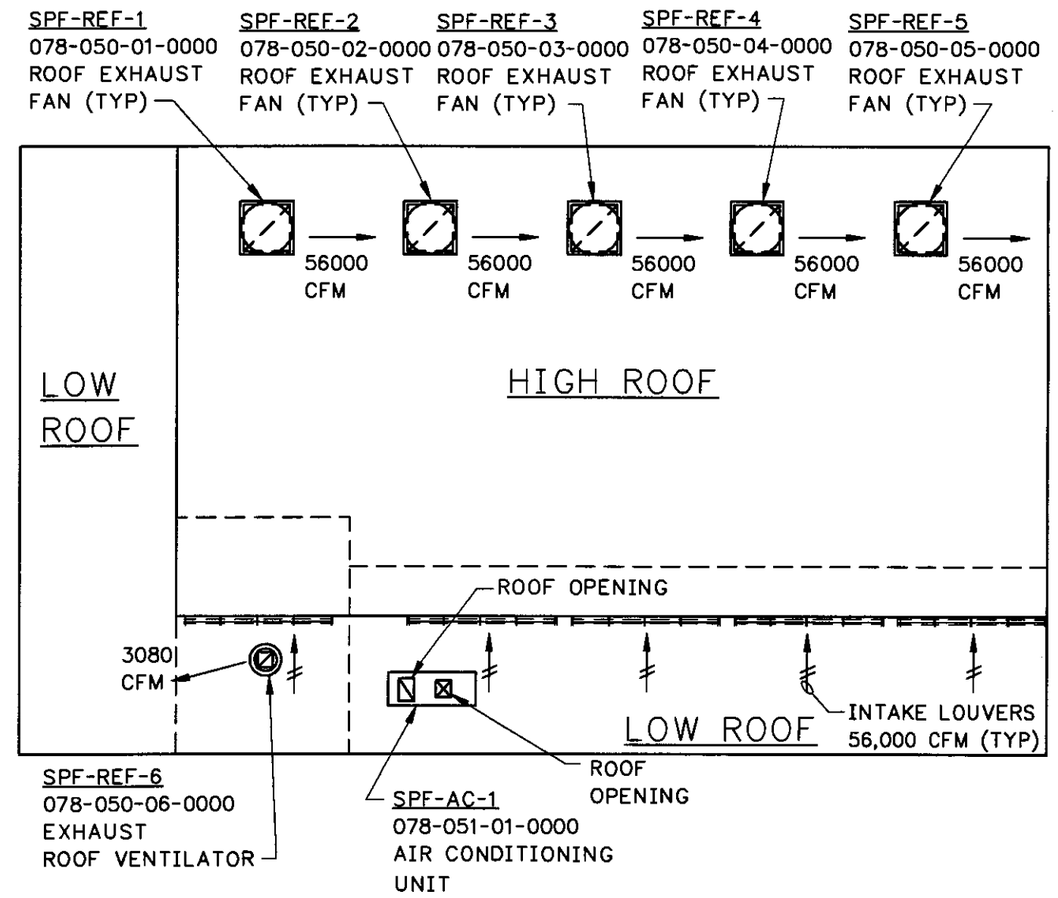

PLAN AT EL 42'-0"

FIGURE III-PO-SPF-6 - STANDBY POWER FACILITY VENTILATION SYSTEM

FILE: PO-SPF-6 1:1 07/13/99 10:20 GH-E

GREELEY AND HANSEN
ENGINEERS

FIGURE III-PO-SPF-6
STANDBY POWER
FACILITY VENTILATION SYSTEM

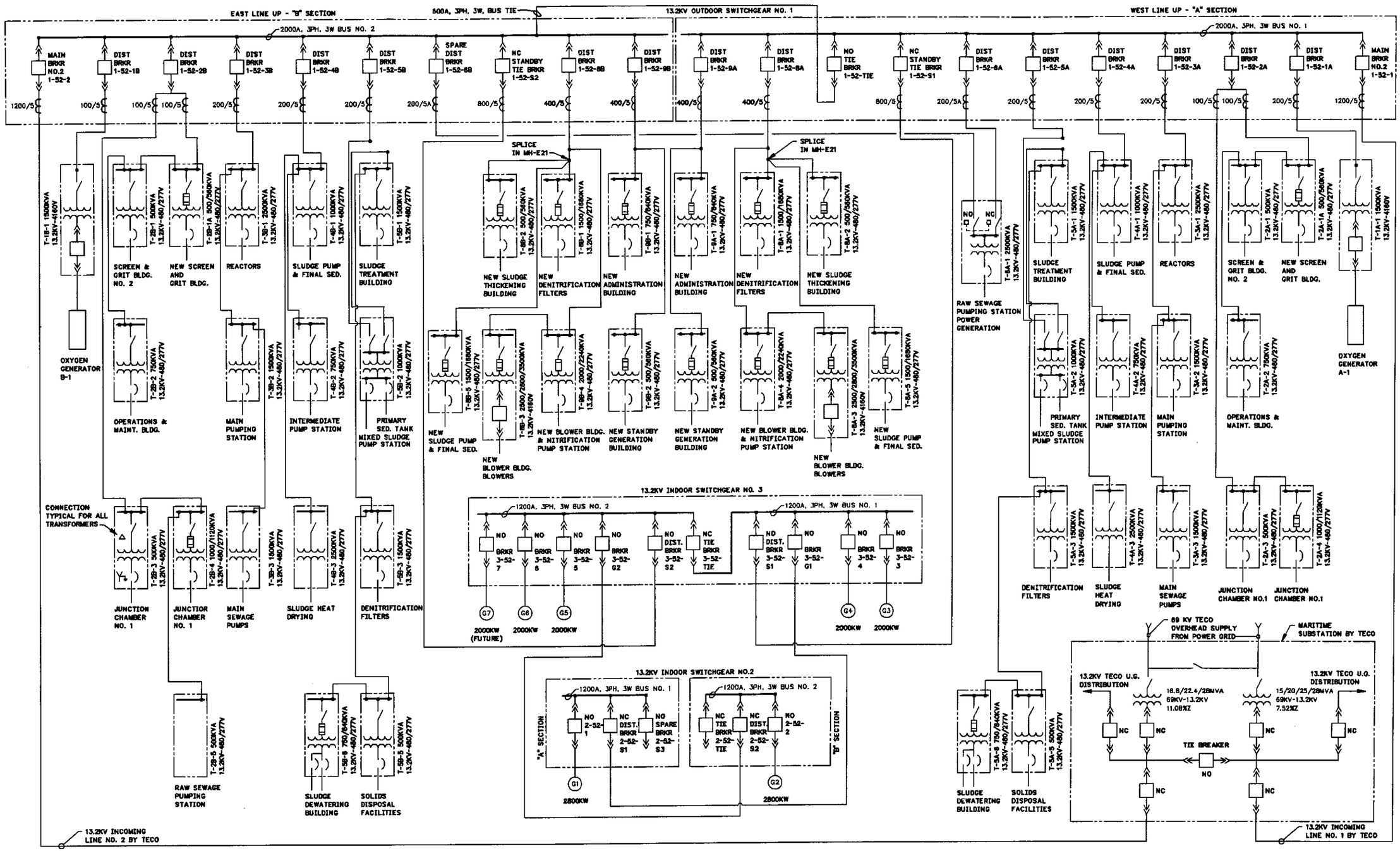

FIGURE III-PO-SPF-7 13.2kV DISTRIBUTION DIAGRAM

GREELEY AND HANSEN

FIGURE III-PO-SPF-7
13.2kV DISTRIBUTION DIAGRAM

FILE: PO-SPF-7 1:1 02/25/99 13:39 GH-E

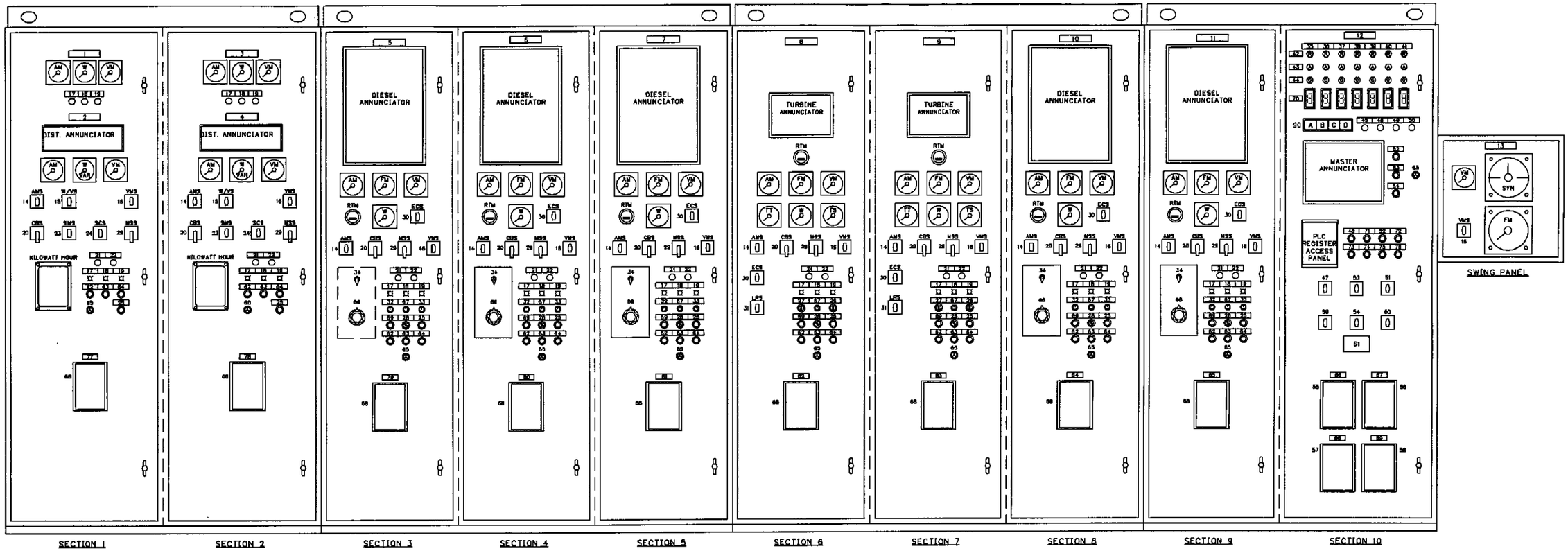

NAMEPLATE/DEVICE LIST

1. TECO LINE 2 MAIN BREAKER 1-52-2
2. DISTRIBUTION BREAKER 3-52-S2 CONTROLS
3. TECO LINE 1 MAIN BREAKER 1-52-1
4. DISTRIBUTION BREAKER 3-52-S1 CONTROLS
5. GENERATOR G7 CONTROLS
6. GENERATOR G6 CONTROLS
7. GENERATOR G5 CONTROLS
8. GENERATOR G2 CONTROLS
9. GENERATOR G1 CONTROLS
10. GENERATOR G4 CONTROLS
11. GENERATOR G3 CONTROLS
12. MASTER GENERATOR CONTROLS
13. MASTER SYNCHRONIZING
14. AMMETER SWITCH
15. KW/KVAR SWITCH
16. VOLTMETER SWITCH
17. BREAKER OPEN
18. BREAKER TRIPPED
19. BREAKER CLOSED
20. CIRCUIT BREAKER SW. TRIP-CLOSE
21. SYNCH. LAMP PHASE "A"
22. SYNCH. LAMP PHASE "C"
23. MODE SEL. SW. PERMISSIVE-OFF-CHECK-RUN
24. CONTROL MODE SW. AUTO-MANUAL
25. FAIL TO SYNCH RESET P/B
26. FREQUENCY ADJUST DECREASE-INCREASE
27. VOLTAGE ADJUST DECREASE-INCREASE
28. BASE LOAD SELECT SW. OFF-ON
29. MANUAL SYNCH. CONTROL SW. (REMOVABLE HANDLE) OFF-ON
30. ENGINE CONTROL SW. LOCKOUT/RESET-OFF/COOLDOWN-AUTO-RUN
31. CONTROL SELECT SW. LOCAL-REMOTE
32. VOLTAGE ADJUST CW TO INCREASE
33. FREQUENCY ADJUST CW TO INCREASE
34. VOLTAGE CONTROL SW. OFF-AUTO-MANUAL
35. GENERATOR G1
36. GENERATOR G2
37. GENERATOR G3
38. GENERATOR G4
39. GENERATOR G5
40. GENERATOR G6
41. GENERATOR G7
42. ON-LINE
43. LOCKED-OUT
44. READY TO LOAD
45. TECO LINE 1 AVAILABLE
46. TECO LINE 1 FAILURE
47. GEN. BUS 1 CONTROL SW. LOAD TEST-NORMAL-STANDBY SERVICE
48. TECO LINE 1 RESTORE P/B (BLACK)
49. TECO LINE 2 AVAILABLE
50. TECO LINE 2 FAILURE
51. GEN. BUS 2 CONTROL SW. LOAD TEST-NORMAL-STANDBY SERVICE
52. TECO LINE 2 RESTORE P/B (BLACK)
53. LOADING SEQUENCE SEL. SW. 3-52-S1 3-52-S2
54. MASTER CONTROL MODE SELECT SW. AUTO-MANUAL
55. GENERATOR BUS 1 UNDER/OVER VOLTAGE RELAY
56. GENERATOR BUS 1 UNDER FREQUENCY RELAY
57. GENERATOR BUS 2 UNDER/OVER VOLTAGE RELAY
58. GENERATOR BUS 2 UNDER FREQUENCY RELAY
59. SYNCH. SELECT SW. GEN. BUS 1 - GEN. BUS 2
60. SYNCH. SELECT SW. GEN. - OFF - TECO LINE 1 - TECO LINE 2
61. SWITCHBOARD IDENTIFICATION PLATE
62. LAMP TEST P/B (BLACK)
63. ACKNOWLEDGE P/B (BLACK)
64. ANNUNCIATOR RESET P/B (BLACK)
65. ALARM HORN
66. MANUAL VOLTAGE ADJUST RHEOSTAT
67. BASE LOAD ADJUST CW TO INCREASE
68. SYNCH. CHECK RELAY
69. GENERATOR ALARM RESET P/B (GREEN)
70. GENERATOR LOADING SEQUENCE
71. BUS NO.1 LOAD SHED RESET P/B
72. BUS NO.2 LOAD SHED RESET P/B
73. ACCTS-1 FAIL RESET P/B
74. ACCTS-2 FAIL RESET P/B
75. GEN. BREAKER CLOAS FAILURE RESET P/B
76. TIE & A6 CIRCUIT BREAKER FAILURE RESET P/B
77. 25M-S2
78. 25M-S1
79. 25M7
80. 25M6
81. 25M5
82. 25M2
83. 25M1
84. 25M4
85. 25MJ
86. 27/59-B1
87. 27/59-B2
88. 81 O/U-B1
89. 81 O/U-B2
90. LAMP BOX
    A - LOAD DEMAND ENABLED
    B - DECREASING LOAD
    C - INCREASING LOAD
    D - OVERLOAD

FIGURE III-PO-SPF-8 13.2kV INDOOR SWITCHGEAR NO. 3 CONTROL SECTIONS

FIGURE III-PO-SPF-8
13.2kV INDOOR SWTICHGEAR NO. 3
CONTROL SECTIONS

GREELEY AND HANSEN

FILE: PO-SPF-8 1:1 02/25/99 14:58 GH-E

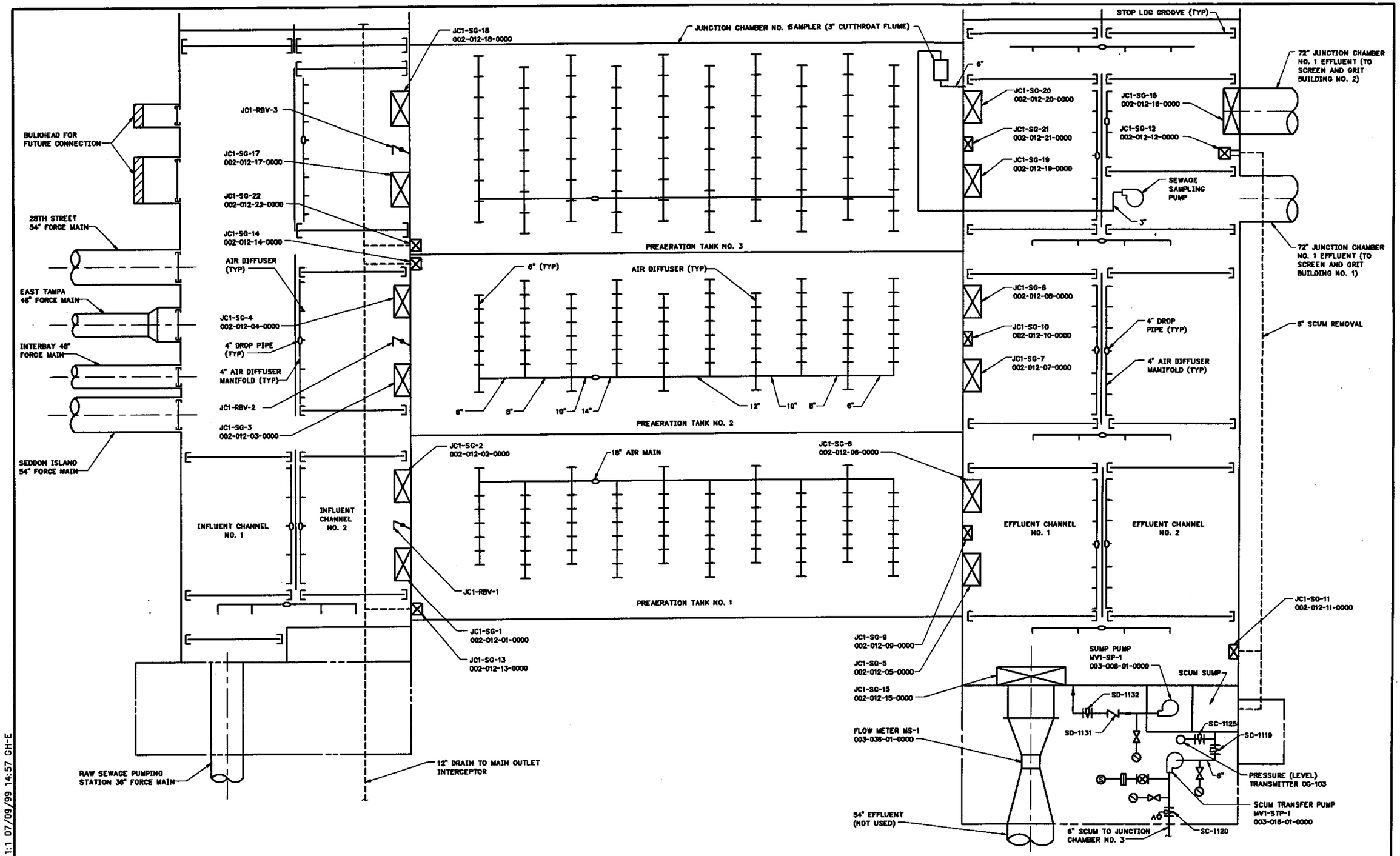

FIGURE III-PR-JC1-1 JUNCTION CHAMBER AND METER VAULT NO.1 FLOW DIAGRAM

GREELEY AND HANSEN ENGINEERS

FILE: PR-JC1-1 1:1 07/09/99 14:57 GH-E

FIGURE III-PR-JC1-1
JUNCTION CHAMBER AND
METER VAULT NO.1 FLOW DIAGRAM

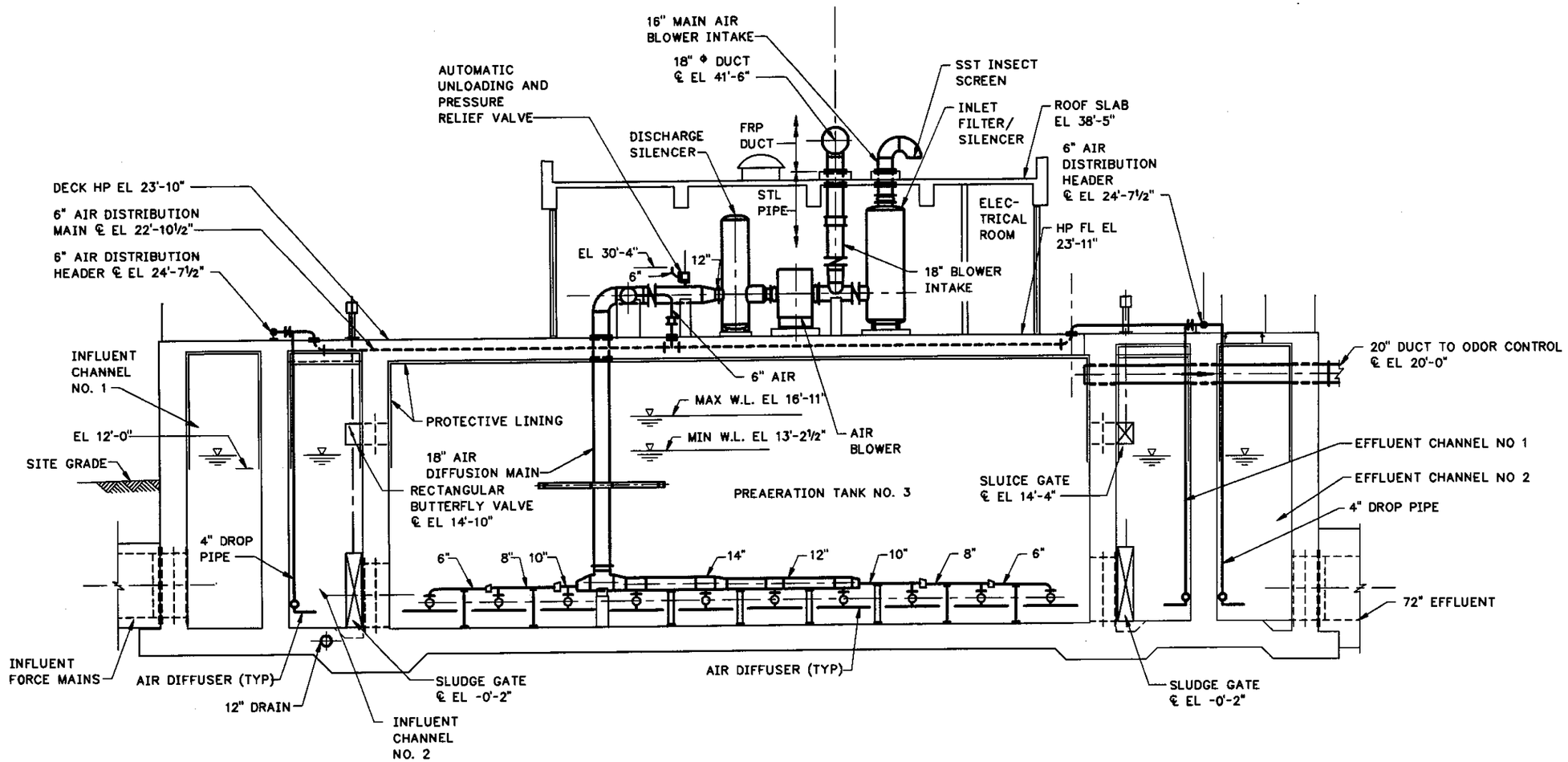

FIGURE III–PR–JC1–2
JUNCTION CHAMBER NO. 1 SECTION

FILE: PR-JC1-2 1:1 02/24/99 09:21 GH-E

GREELEY AND HANSEN
ENGINEERS

FIGURE III-PR-JC1-2
JUNCTION CHAMBER NO.1 SECTION

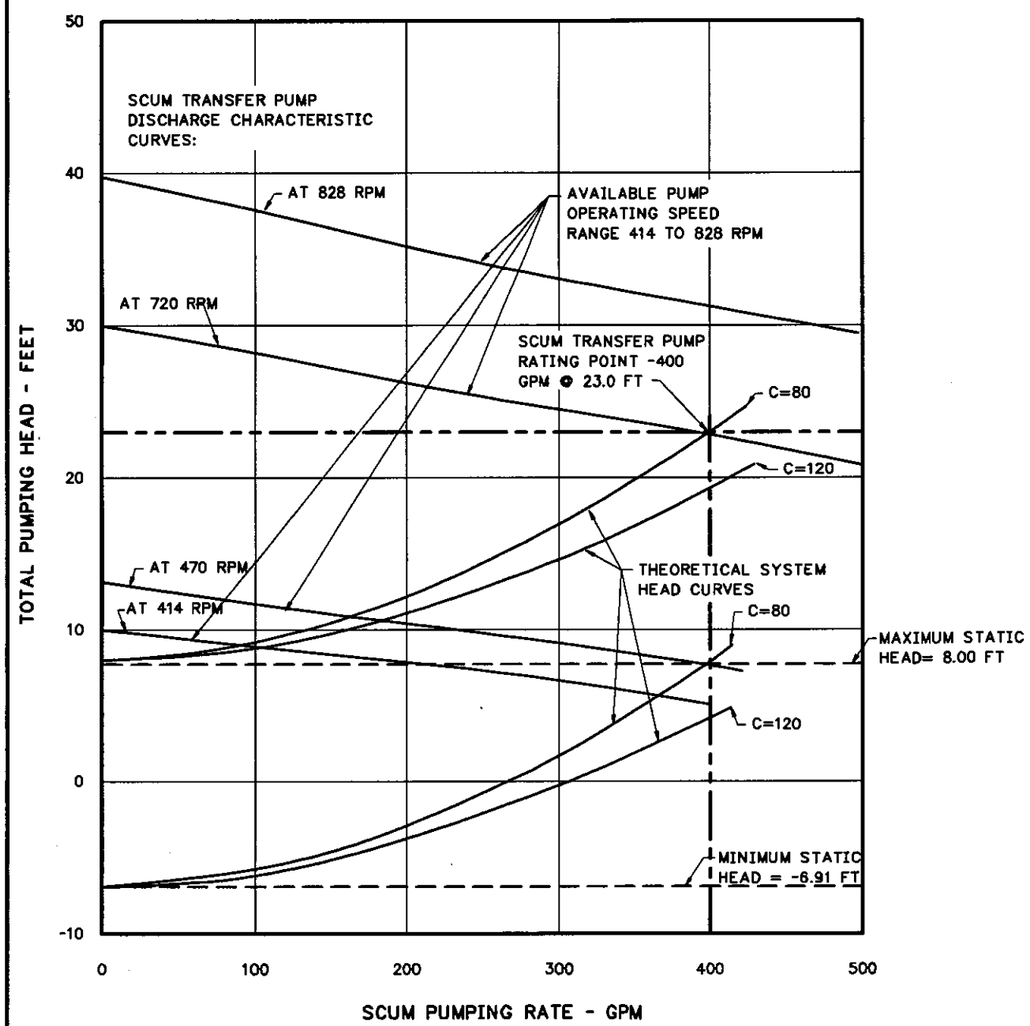

FIGURE III-PR-JC1-3
SCUM TRANSFER PUMP DISCHARGE CURVES

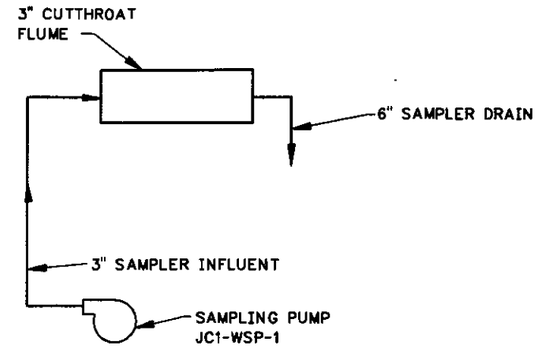

FIGURE III-PR-JC1-4
SEWAGE SAMPLING DIAGRAM

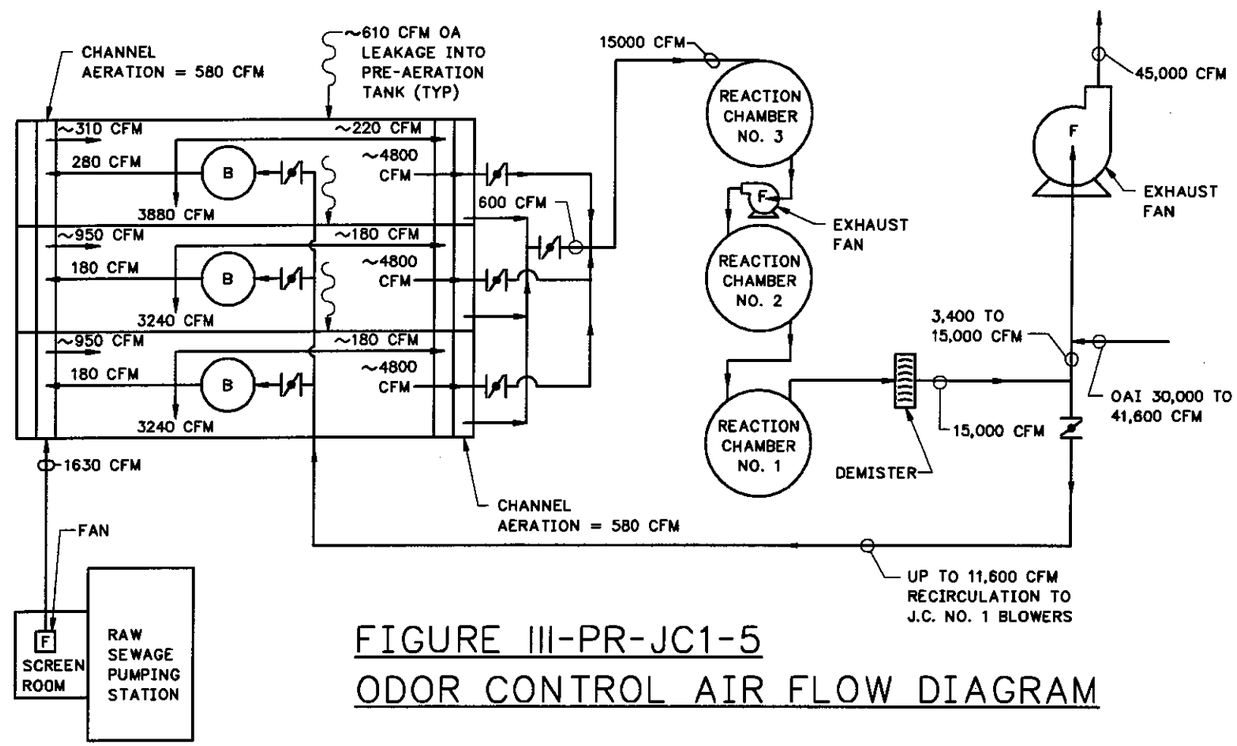

FIGURE III-PR-JC1-5
ODOR CONTROL AIR FLOW DIAGRAM

FIGURE III-PR-JC1-3
SCUM TRANSFER PUMP DISCHARGE CURVES
FIGURE III-PR-JC1-4
SEWAGE SAMPLING DIAGRAM
FIGURE III-PR-JC1-5
ODOR CONTROL AIR FLOW DIAGRAM

GREELEY AND HANSEN
ENGINEERS

FILE: PR-JC1-5 1:1 02/24/99 09:24 GH-E

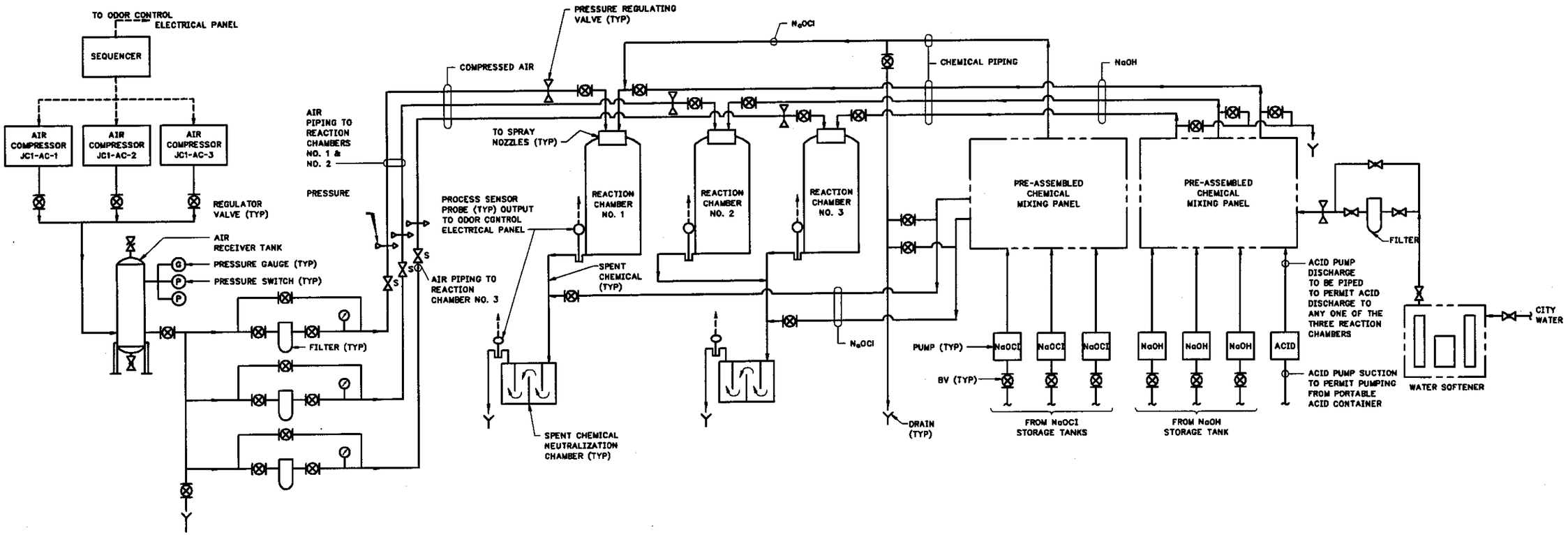

FIGURE III-PR-JC1-6
ODOR CONTROL COMPRESSED AIR AND CHEMICAL SYSTEM DIAGRAM

FILE: PR-JC1-6 1:1 01/28/99 09:04 GH-A

GREELY AND HANSEN
ENGINEERS

FIGURE III-PR-JC1-6
ODOR CONTROL COMPRESSED AIR
AND CHEMICAL SYSTEM DIAGRAM

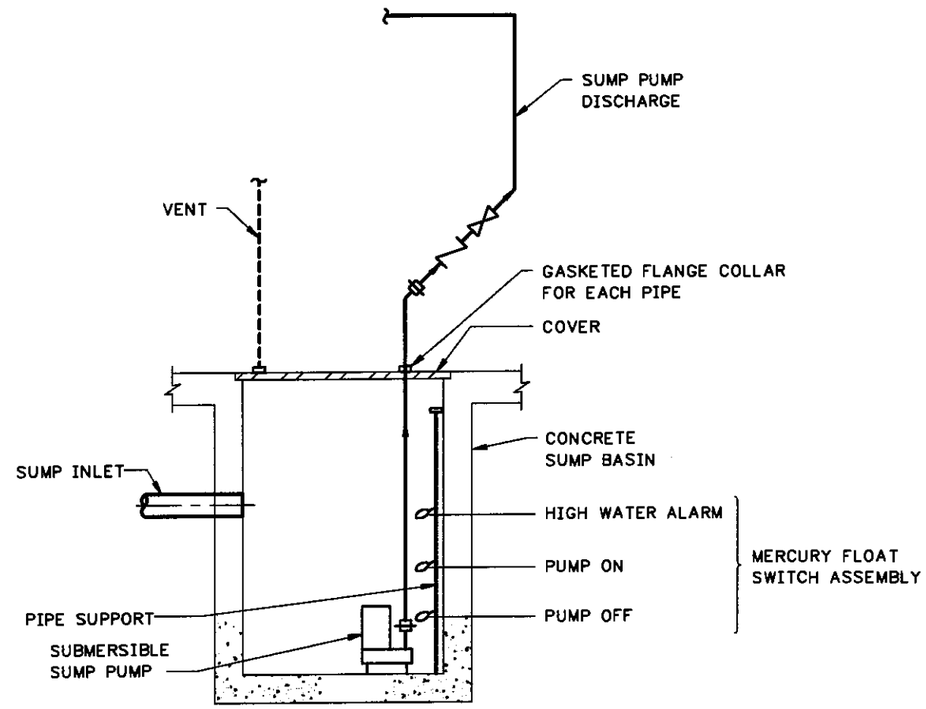

FIGURE III-PR-JC1-7
TYPICAL SUMP PUMP DETAIL

FILE: PR-JC1-7 1:1 02/24/99 09:30 GH-E

GREELEY AND HANSEN
ENGINEERS

FIGURE III-PR-JC1-7
TYPICAL SUMP PUMP INSTALLATION

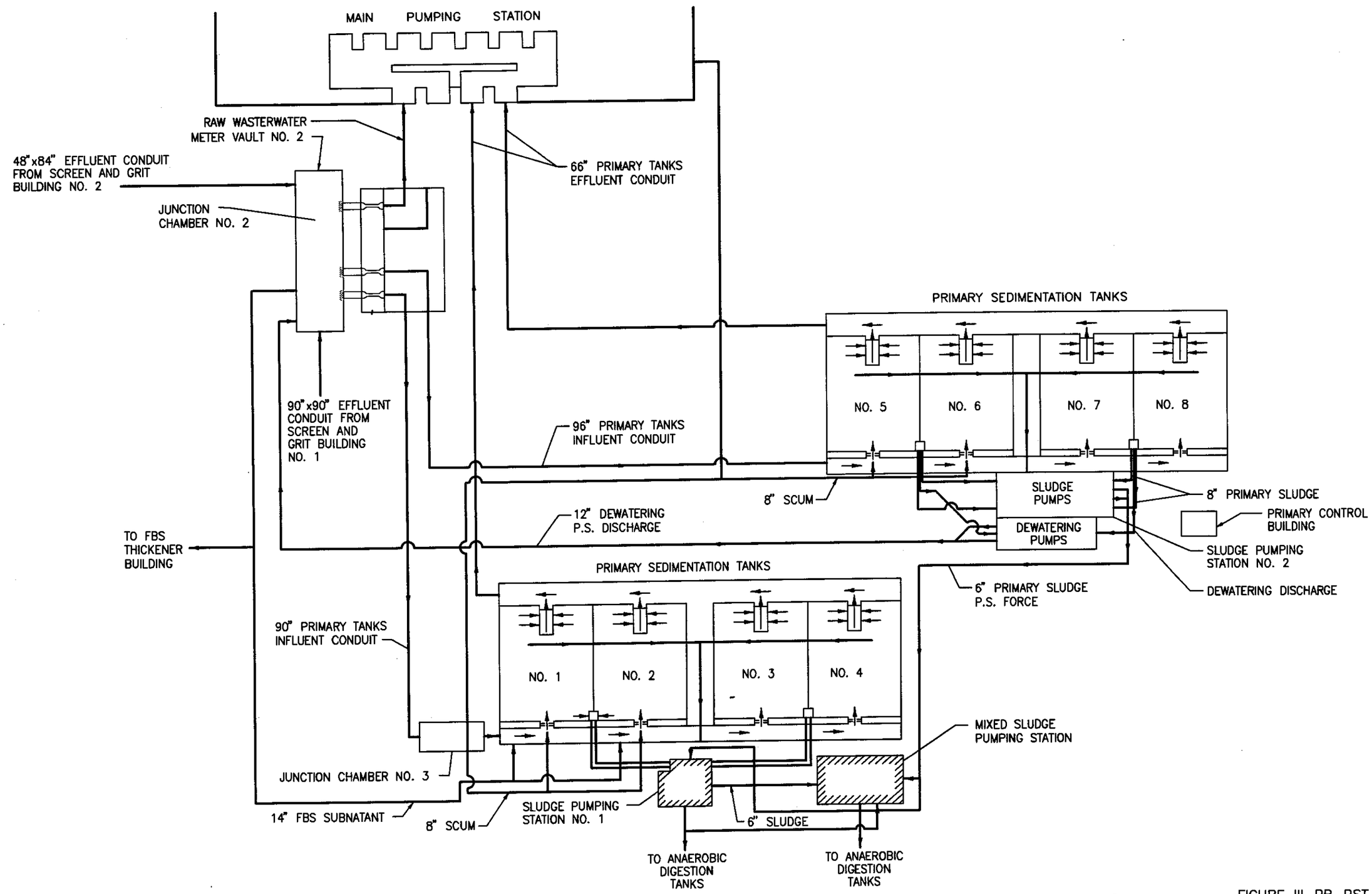

FIGURE III–PR–PST–1 SCHEMATIC DIAGRAM OF OUTSIDE PIPING

GREELEY AND HANSEN ENGINEERS
FALLER, DAVIS & ASSOCIATES

FILE: PR-PST-1 1:1 01/13/99 08:32 GH-A

FIGURE III–PR–PST–1
SCHEMATIC DIAGRAM
OF OUTSIDE PIPING

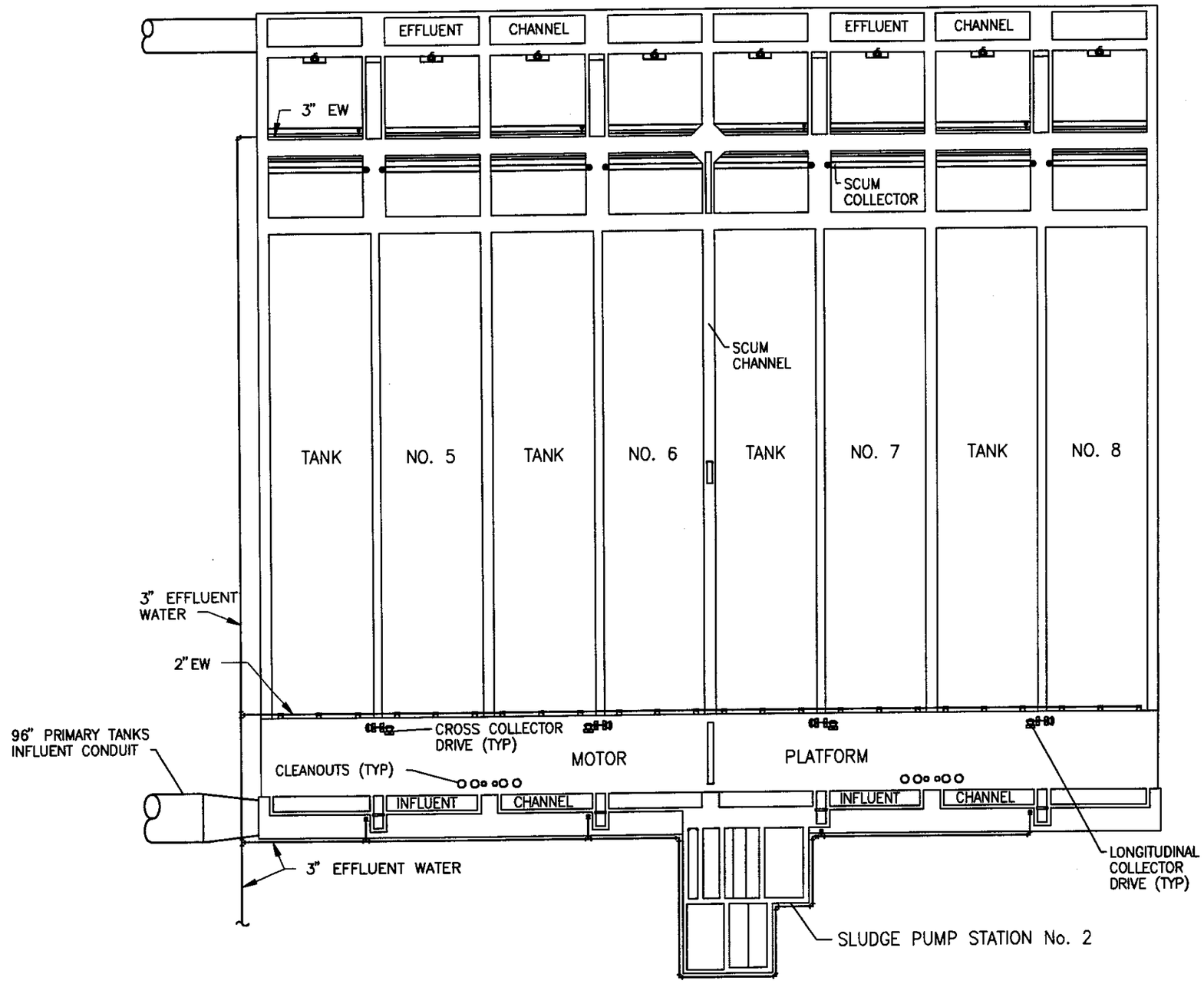

FIGURE III–PR–PST–2 PRIMARY SEDIMENTATION TANKS
(TYPICAL FOR PRIMARY SEDIMENTATION TANKS Nos. 1–4)

GREELEY AND HANSEN ENGINEERS
FALLER, DAVIS & ASSOCIATES

FILE: PR-PST-2 1:0 02/24/99 09:44 GH-E

FIGURE III–PR–PST–2
PRIMARY SEDIMENTATION
TANKS

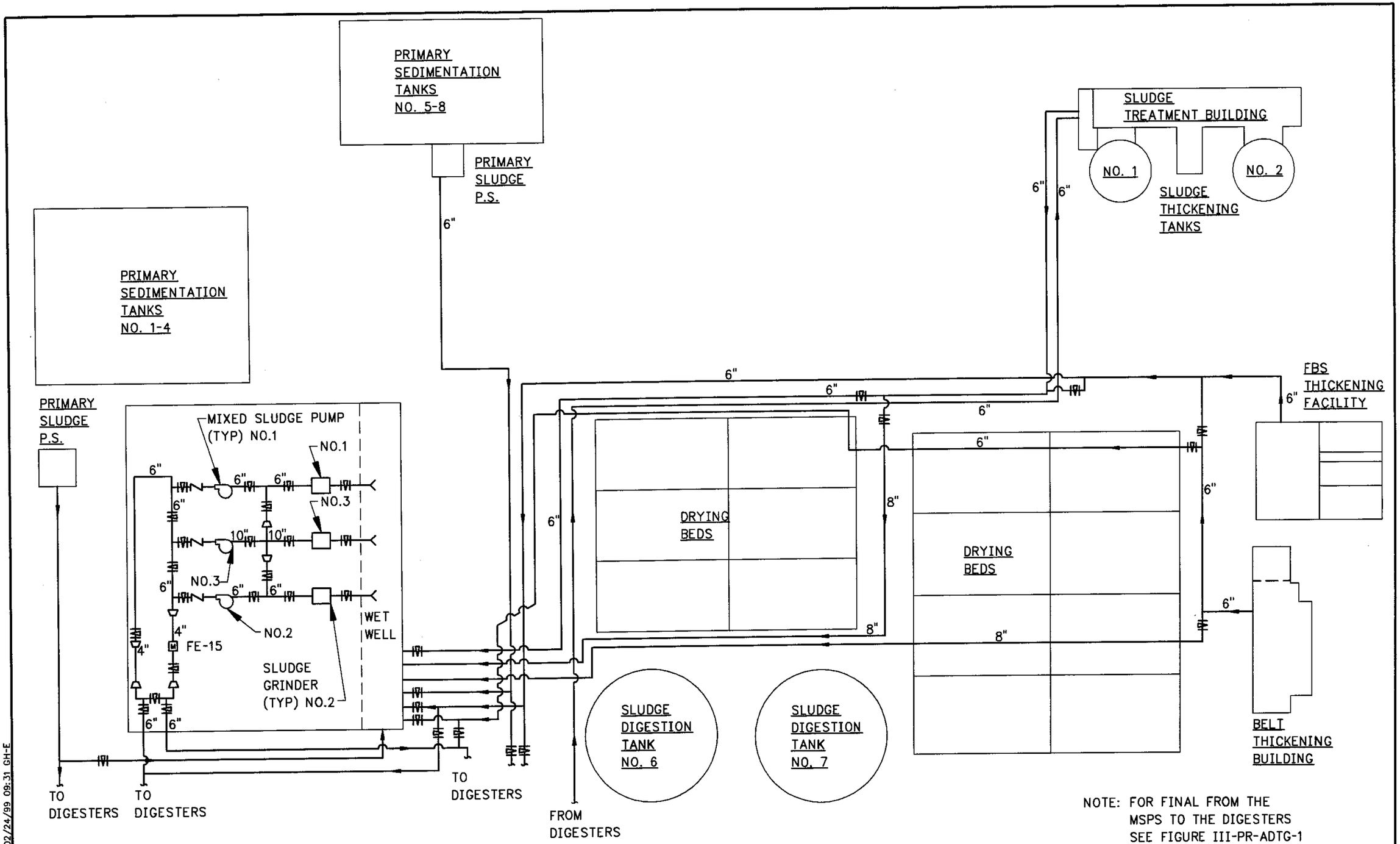

NOTE: FOR FINAL FROM THE MSPS TO THE DIGESTERS SEE FIGURE III-PR-ADTG-1

FIGURE III-PR-MSPS-1
MIXED SLUDGE PUMP STATION FEED PIPING

GREELEY AND HANSEN ENGINEERS

FILE: PR-MSP-1 1:1 02/24/99 09:31 GH-E

FIGURE III-PR-MSPS-1
MIXED SLUDGE PUMP
STATION FEED PIPING

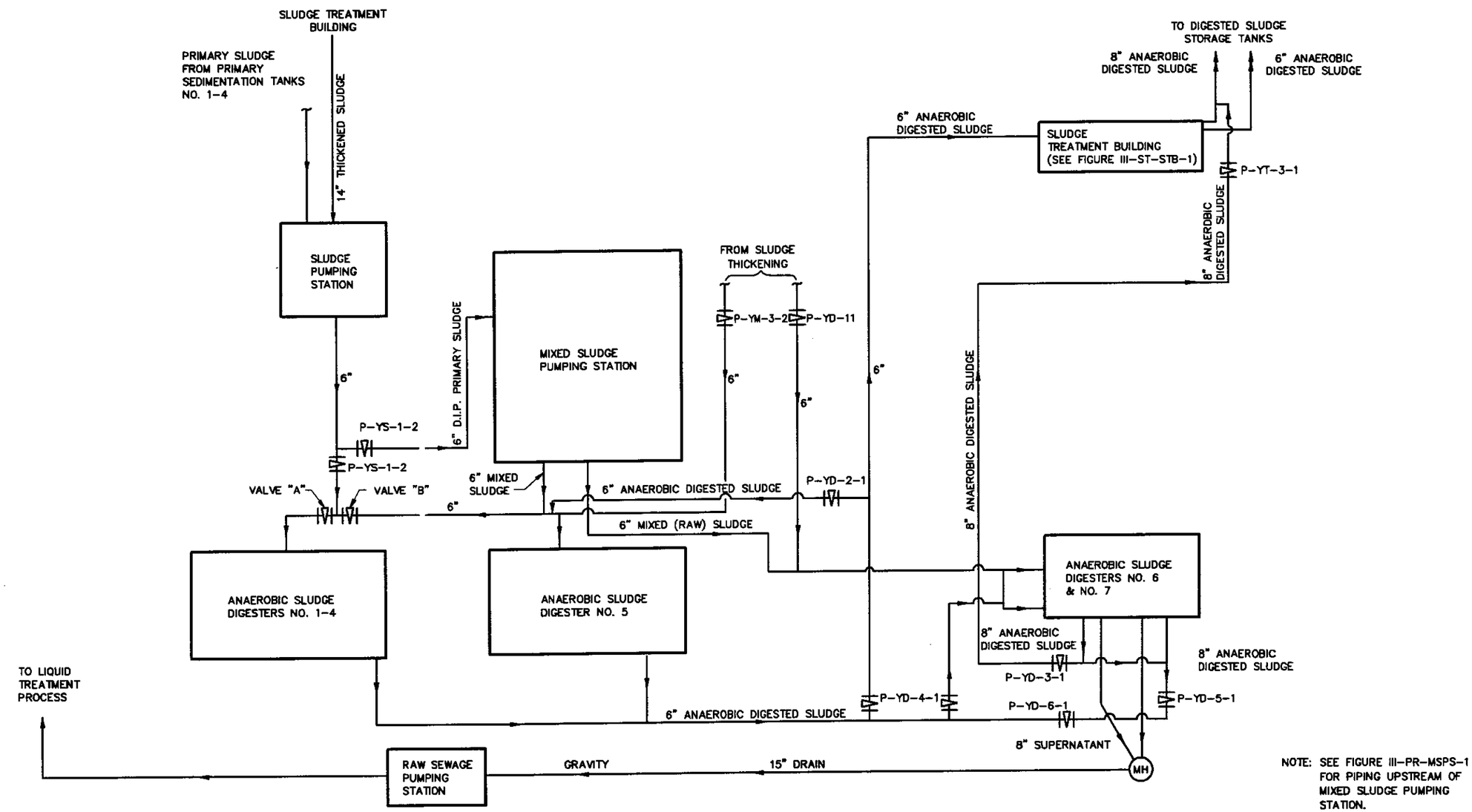

NOTE: SEE FIGURE III-PR-MSPS-1 FOR PIPING UPSTREAM OF MIXED SLUDGE PUMPING STATION.

FIGURE III-PR-ADTG-1
GENERALIZED SLUDGE FLOW DIAGRAM

GREELEY AND HANSEN ENGINEERS
FALLER, DAVIS & ASSOCIATES

FIGURE III-PR-ADTG-1
GENERALIZED SLUDGE
FLOW DIAGRAM

FILE: PR-ADT-1 1:1 01/11/99 11:56 GH-A

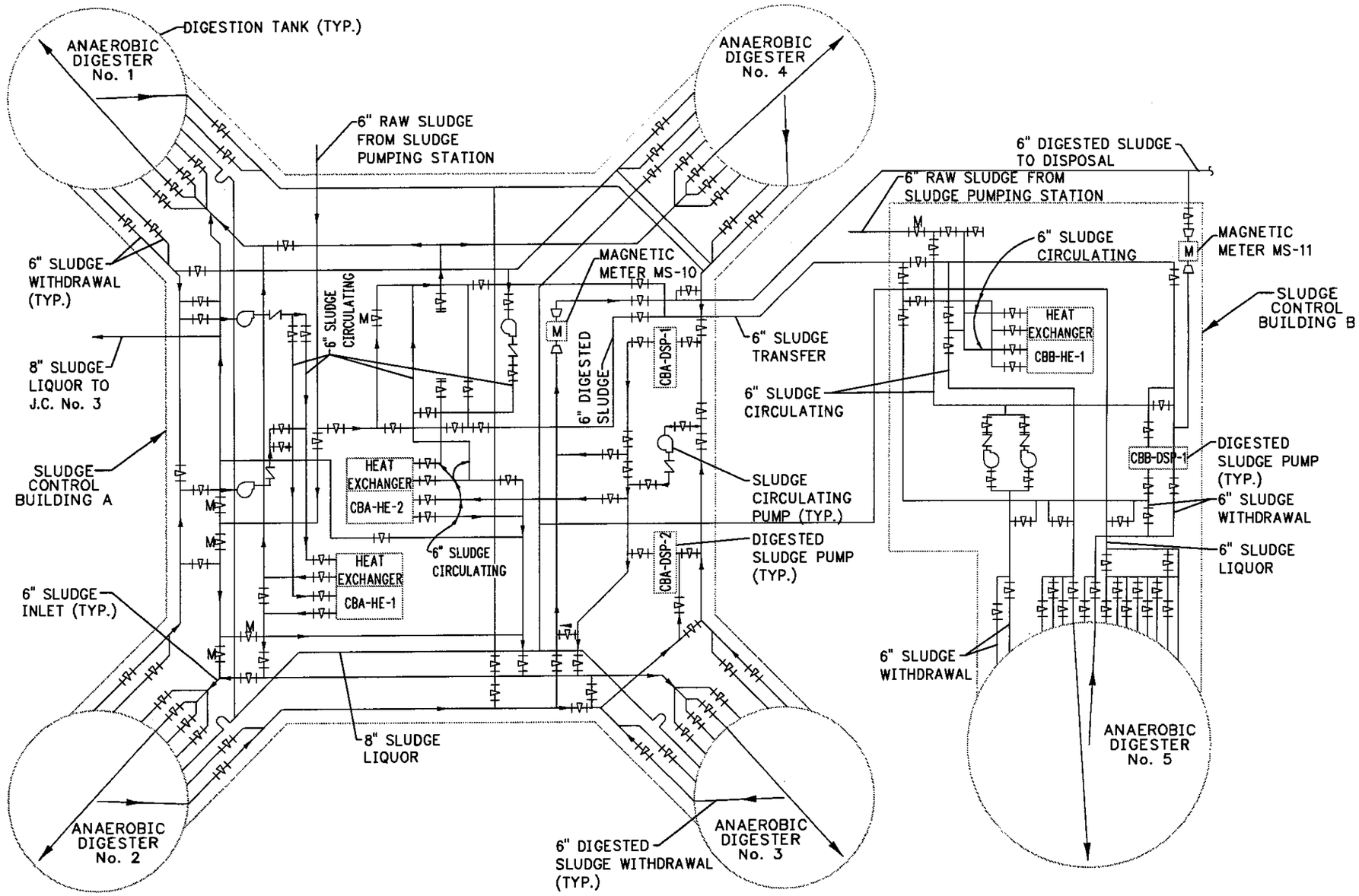

FIGURE III-PR-ADTG-2 SLUDGE FLOW DIAGRAM FOR ANAEROBIC DIGESTERS NOS. 1-5

GREELEY AND HANSEN ENGINEERS
FALLER, DAVIS & ASSOCIATES

FIGURE III-PR-ADTG-2
SLUDGE FLOW DIAGRAM FOR
ANAEROBIC DIGESTERS NOS. 1-5

FILE: PR-ADT-2 1:0 01/11/99 11:58 GH-A

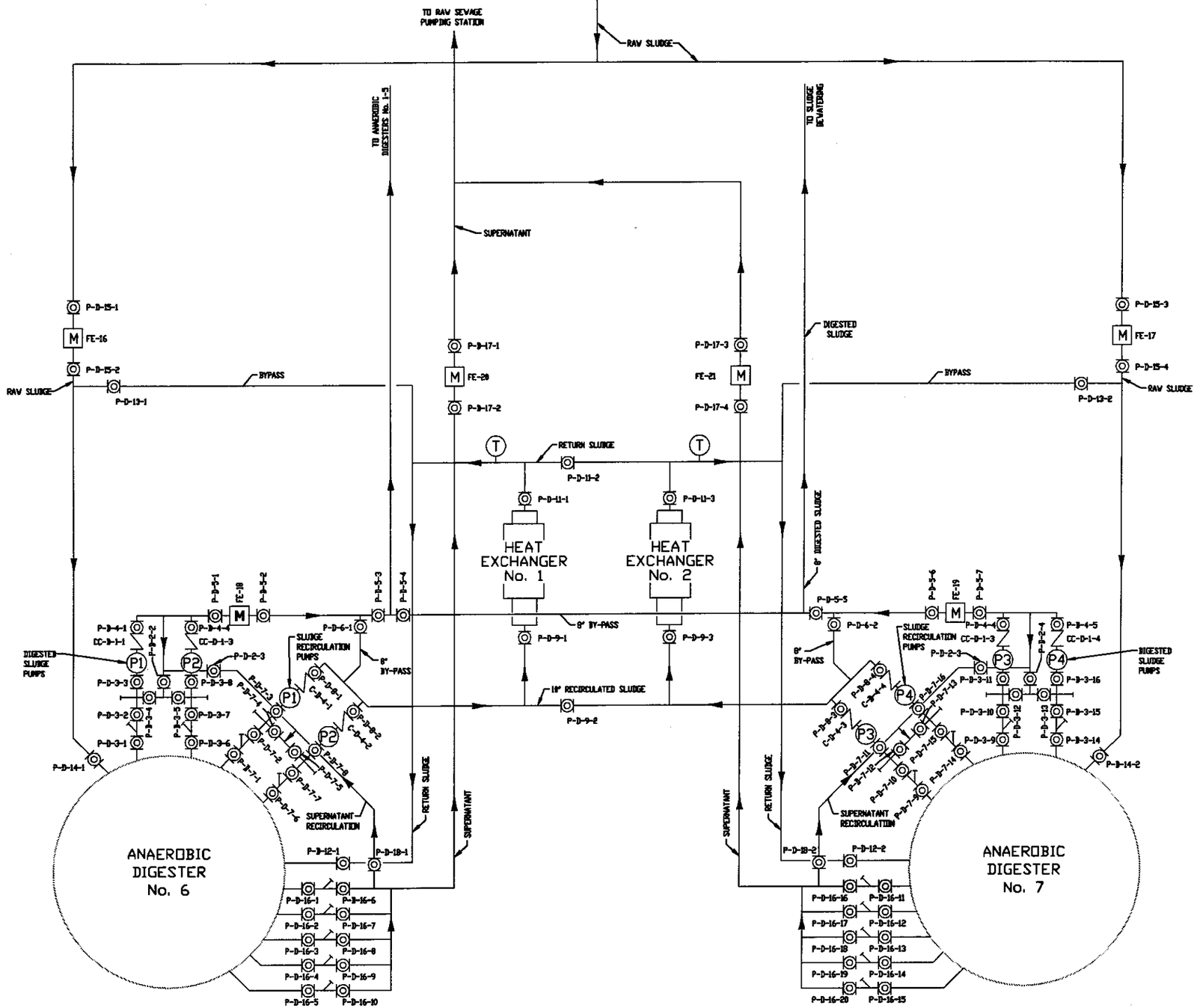

FIGURE III-PR-ADTG-3 SLUDGE FLOW DIAGRAM FOR ANAEROBIC DIGESTERS NOS. 6 AND 7

GREELEY AND HANSEN ENGINEERS
FALLER, DAVIS & ASSOCIATES

FIGURE III-PR-ADTG-3
SLUDGE FLOW DIAGRAM FOR
ANAEROBIC DIGESTERS NOS. 6 AND 7

FILE: PR-ADT-3 1:1 02/24/99 09:39 GH-E

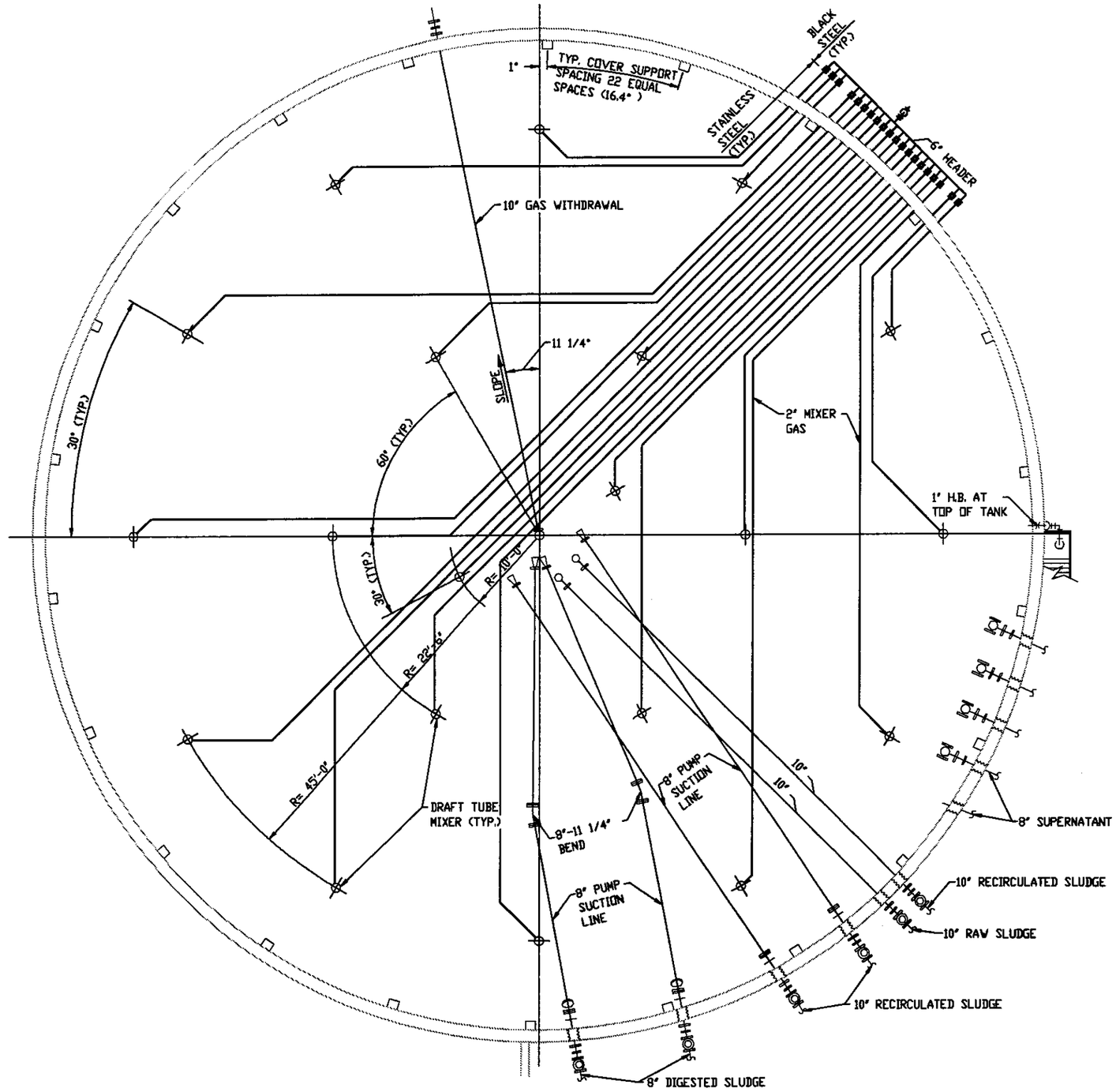

FILE: FIGURE16 1:1 02/03/99 01:23 GH-A

GREELEY AND HANSEN ENGINEERS
FALLER, DAVIS & ASSOCIATES

FIGURE III-PR-ADTG-4 ANAEROBIC DIGESTER TYPICAL PLAN

FIGURE III-PR-ADTG-4
ANAEROBIC DIGESTER
TYPICAL PLAN

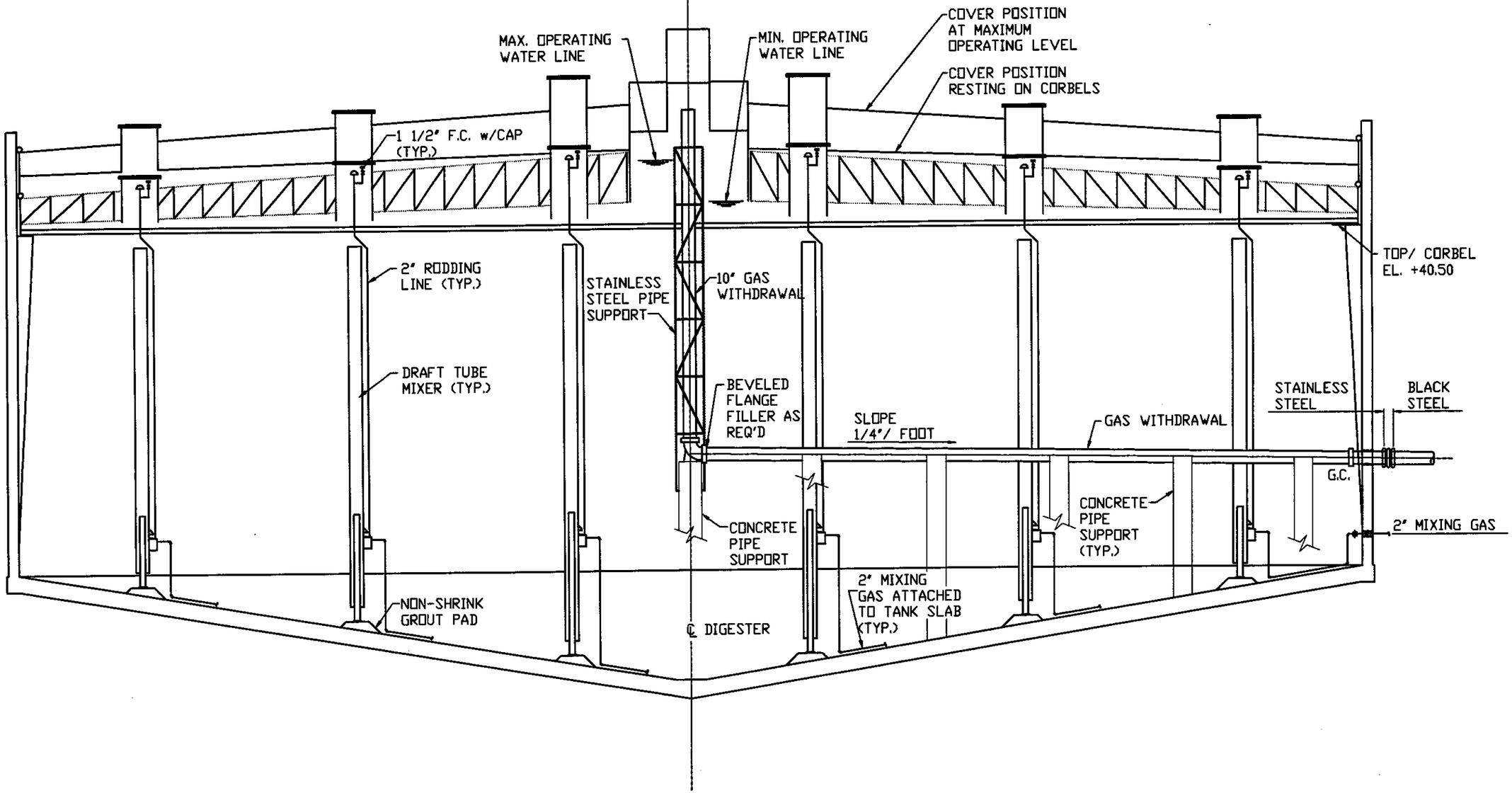

FIGURE III-PR-ADTG-5 ANAEROBIC DIGESTER TYPICAL SECTION

FILE: PR-ADT-5 1:1 02/08/99 09:53 GH-A

GREELEY AND HANSEN ENGINEERS
FALLER, DAVIS & ASSOCIATES

FIGURE III-PR-ADTG-5
DIGESTER TYPICAL SECTION

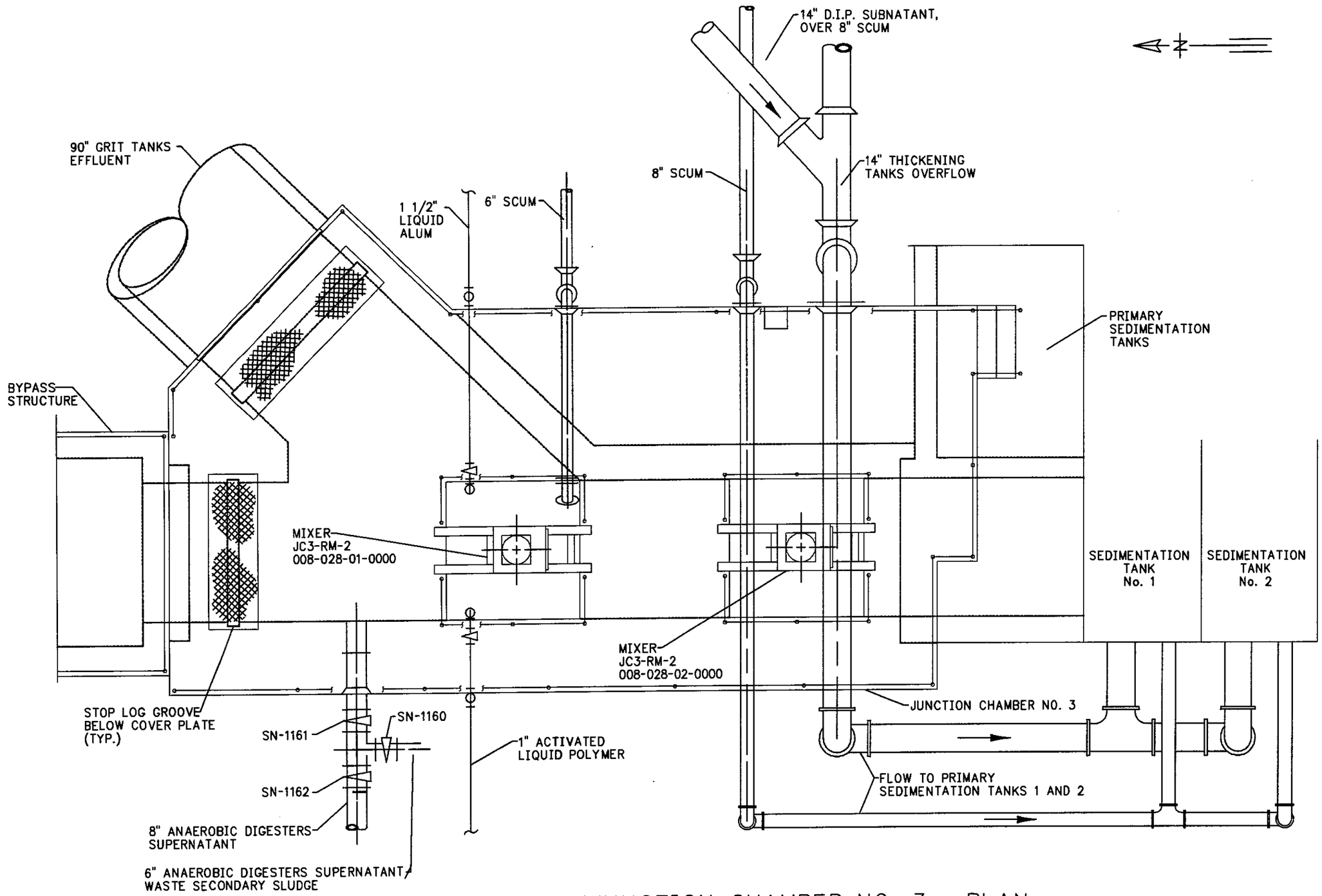

FIGURE III-PR-JC3-1JUNCTION CHAMBER NO. 3 - PLAN

GREELEY AND HANSEN ENGINEERS
FALLER, DAVIS & ASSOCIATES

FIGURE III-PR-JC3-1
JUNCTION CHAMBER
NO. 3 - PLAN

FILE: PR-JC3-1 1:0 02/24/99 09:42 GH-E

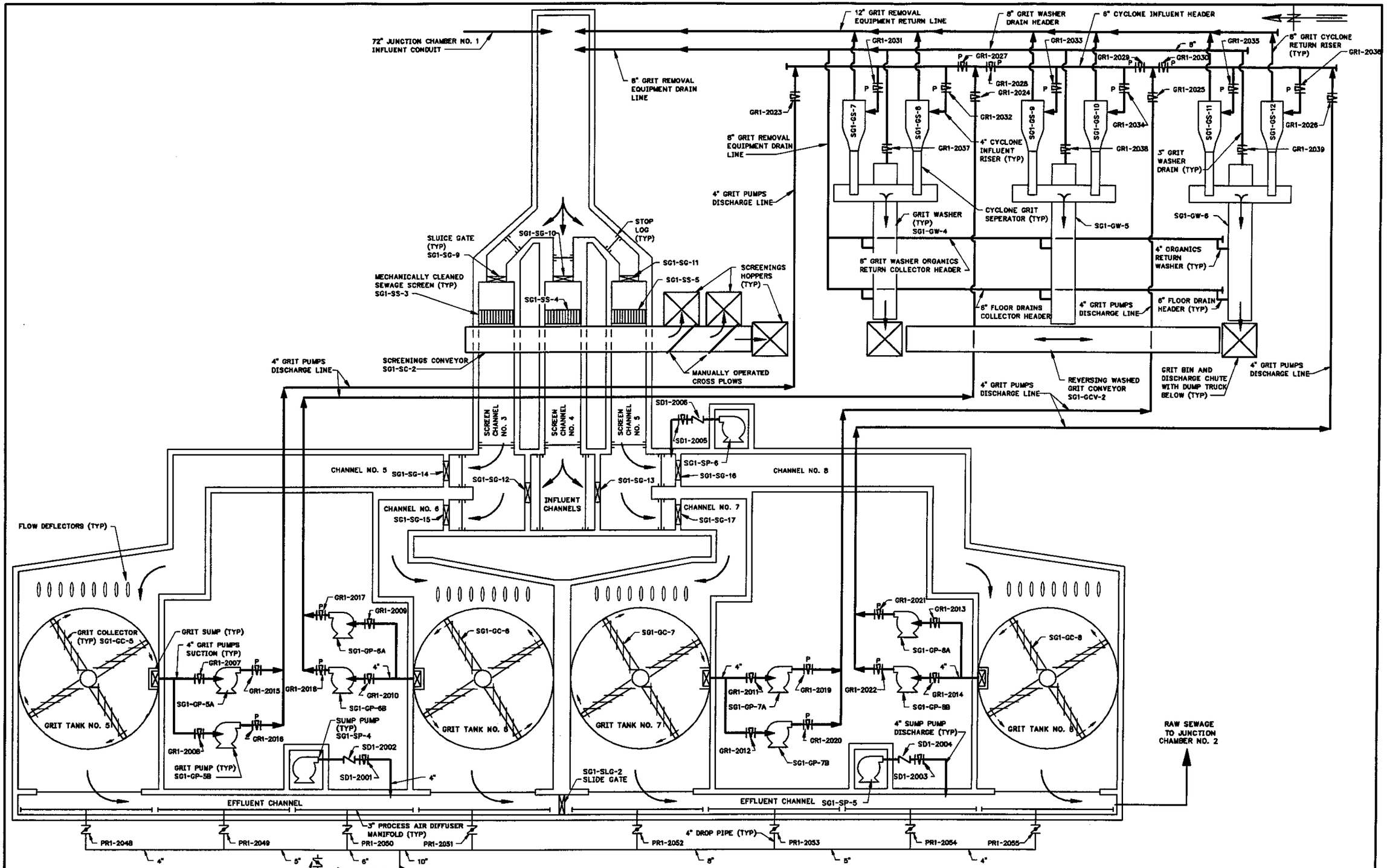

GREELEY AND HANSEN ENGINEERS

FIGURE III-SG-SG1-1 SCREEN AND GRIT BUILDING NO.1 FLOW DIAGRAM

FIGURE III-SG-SG1-1
SCREEN AND GRIT BUILDING NO.
FLOW DIAGRAM

FILE: SG-SG-1 1:1 03/02/99 10:12 GH-E

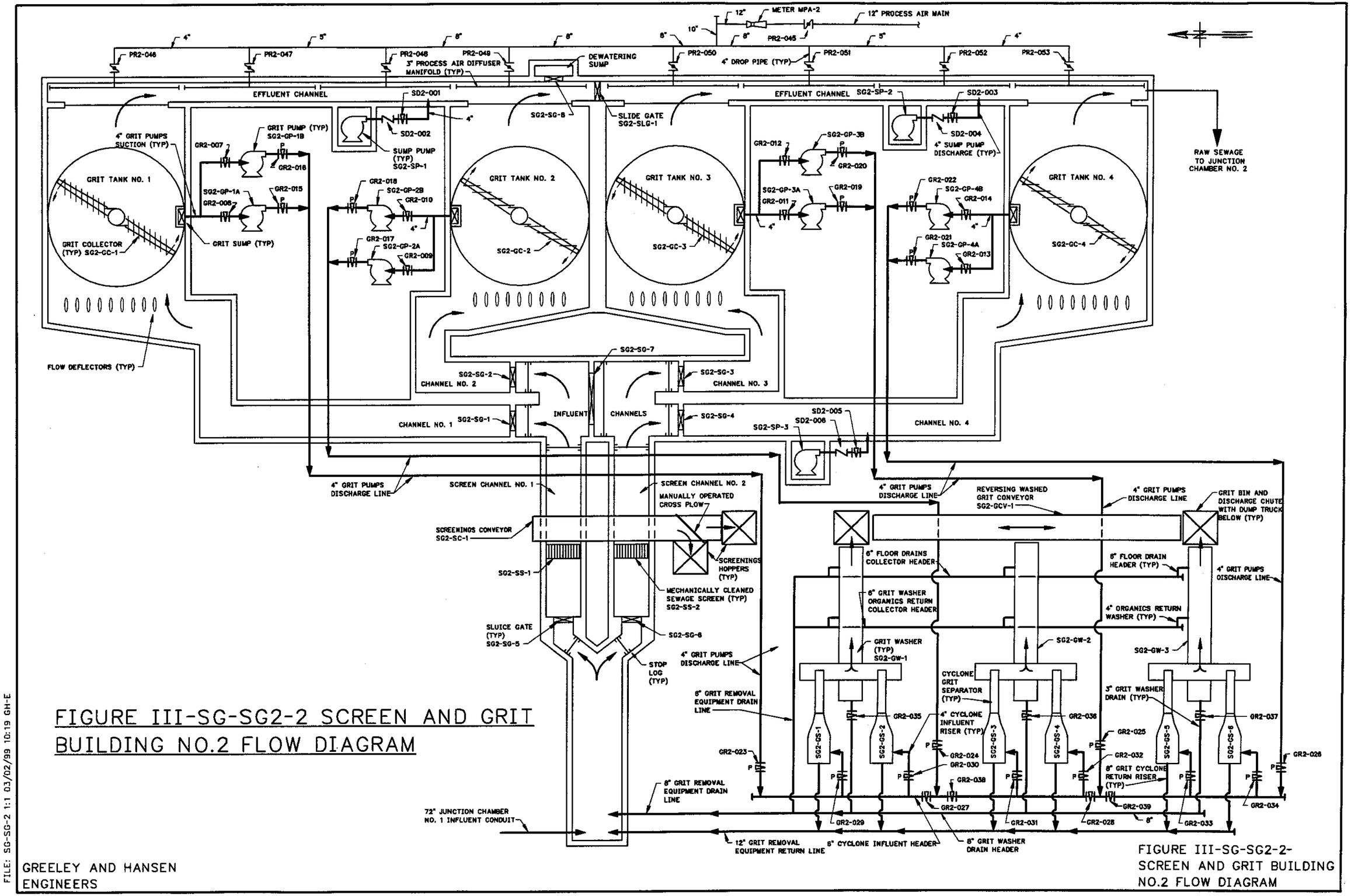

FIGURE III-SG-SG2-2 SCREEN AND GRIT BUILDING NO.2 FLOW DIAGRAM

GREELEY AND HANSEN ENGINEERS

FIGURE III-SG-SG2-2-SCREEN AND GRIT BUILDING NO.2 FLOW DIAGRAM

FILE: SG-SG-2 1:1 03/02/99 10:19 GH-E

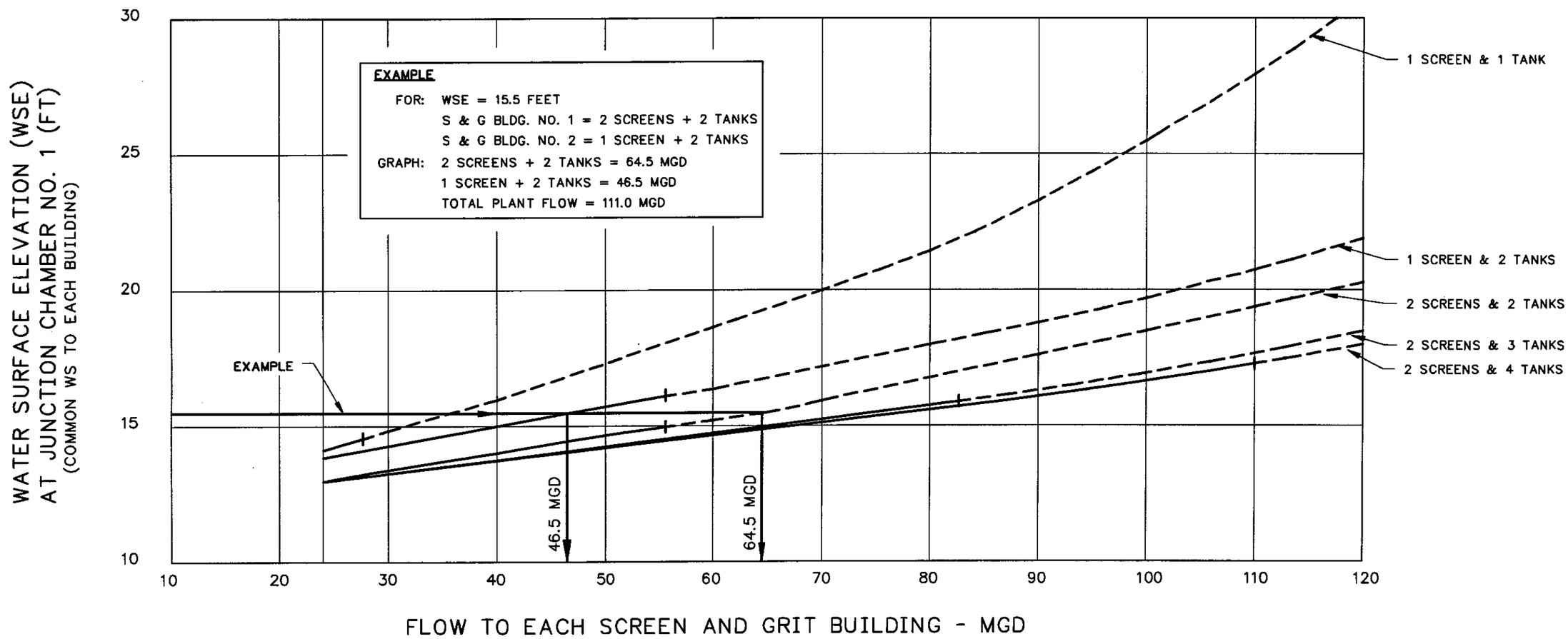

FIGURE III-SG-SG1-3
FLOW SEPARATION CURVES

RECOMMENDED OPERATING RANGE

EXCEEDS MAXIMUM RECOMMENDED OPERATING POINT

FILE: SG-SG-3 1:1 03/02/99 10:24 GH-E

GREELEY AND HANSEN
ENGINEERS

FIGURE III-SG-SG1-3
SCREEN AND GRIT BUILDING NO. 1
FLOW SEPARATION CURVES

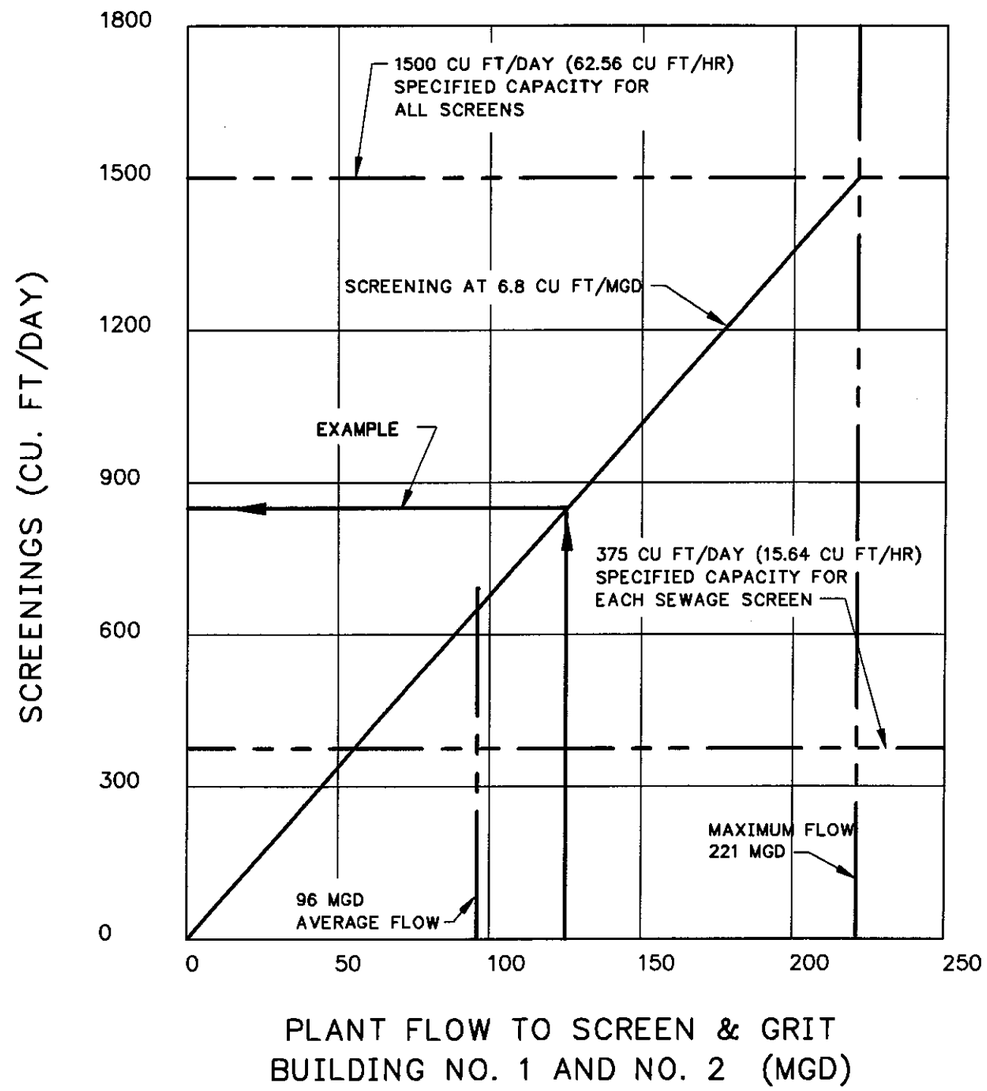

EXAMPLE

FOR: PLANT FLOW = 125 MGD

GRAPH: TOTAL SCREENINGS = 850 CU FT/DAY

FIGURE II-SG-SG1/SG2-4
SCREENINGS REMOVAL CURVES

FILE: SG-SG-4 1:1 03/02/99 10:34 GH-E

GREELEY AND HANSEN
ENGINEERS

FIGURE III-SG-SG1/SG2-4
SCREENING REMOVAL CURVES

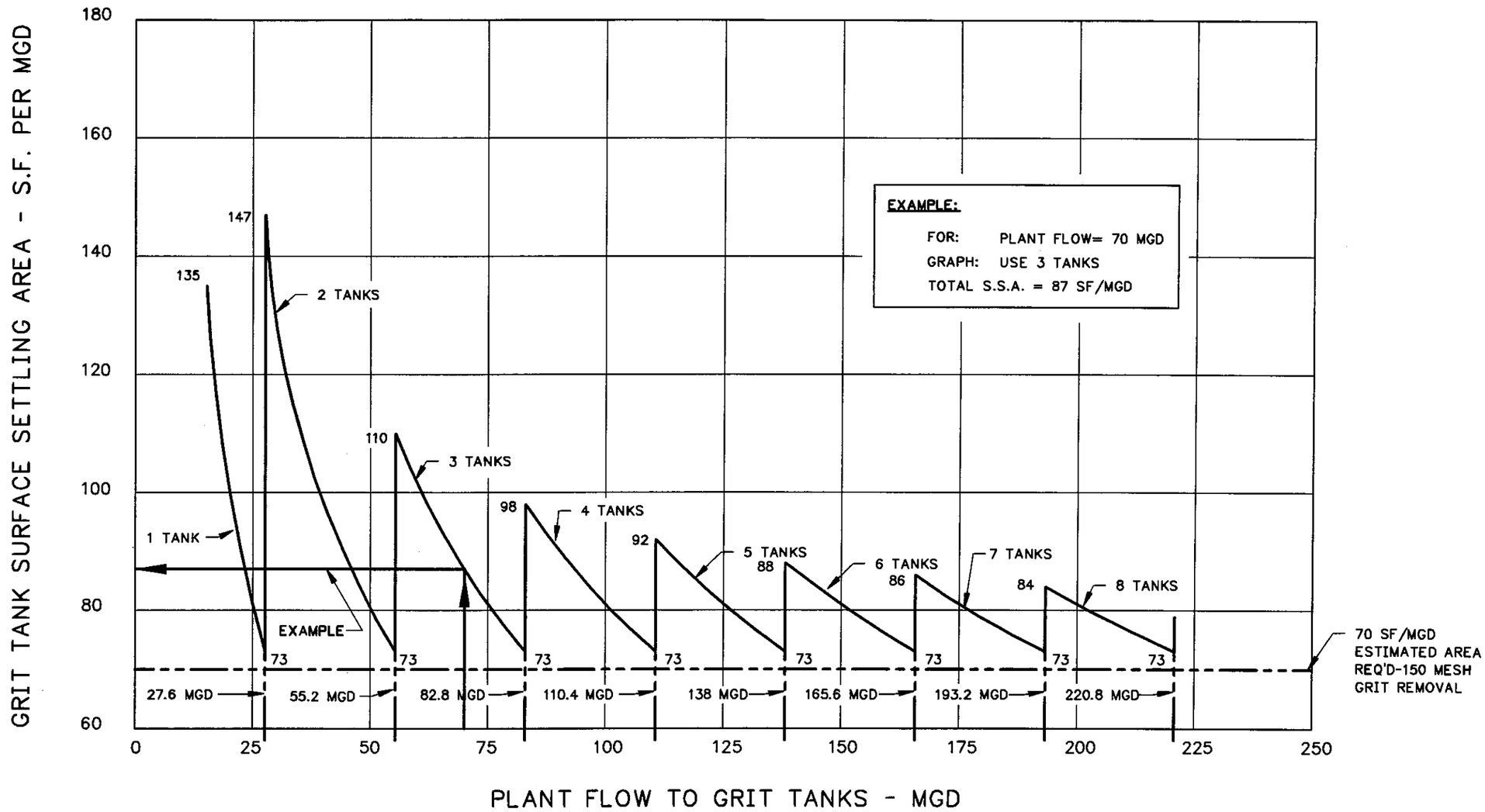

FIGURE III-SG-SG1/SG2-5
GRIT TANKS SURFACE LOADING CURVES

FILE: SG-SG-5 1:1 03/02/99 10:41 GH-E

GREELEY AND HANSEN
ENGINEERS

FIGURE III-SG-SG1/SG2-5
SCREEN AND GRIT BUILDING NO. 1&2
GRIT TANKS SURFACE LOADING CURVES

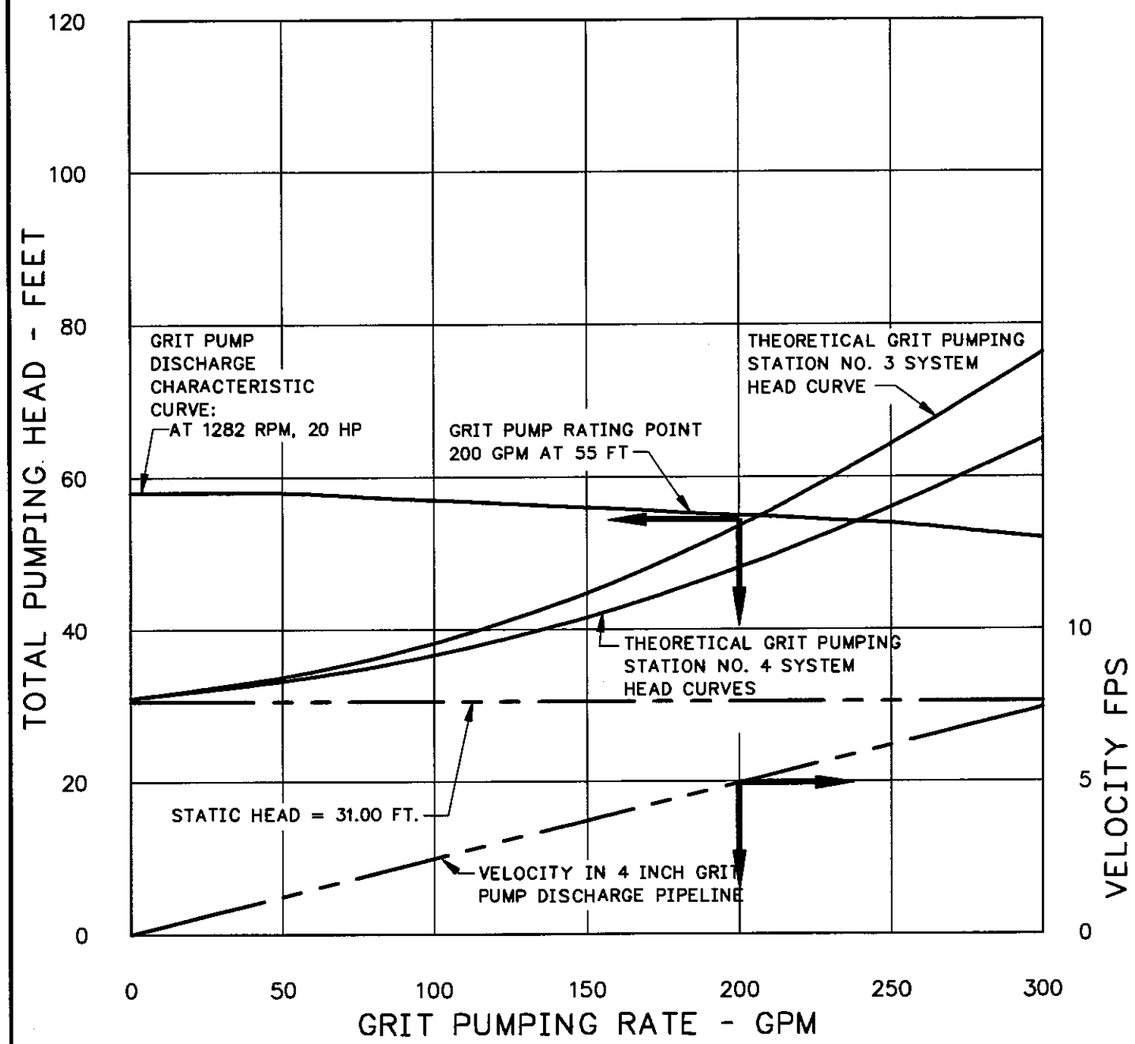

FIGURE III-SG-SG1-6
GRIT PUMP DISCHARGE CURVE
SCREEN AND GRIT BUILDING NO. 1

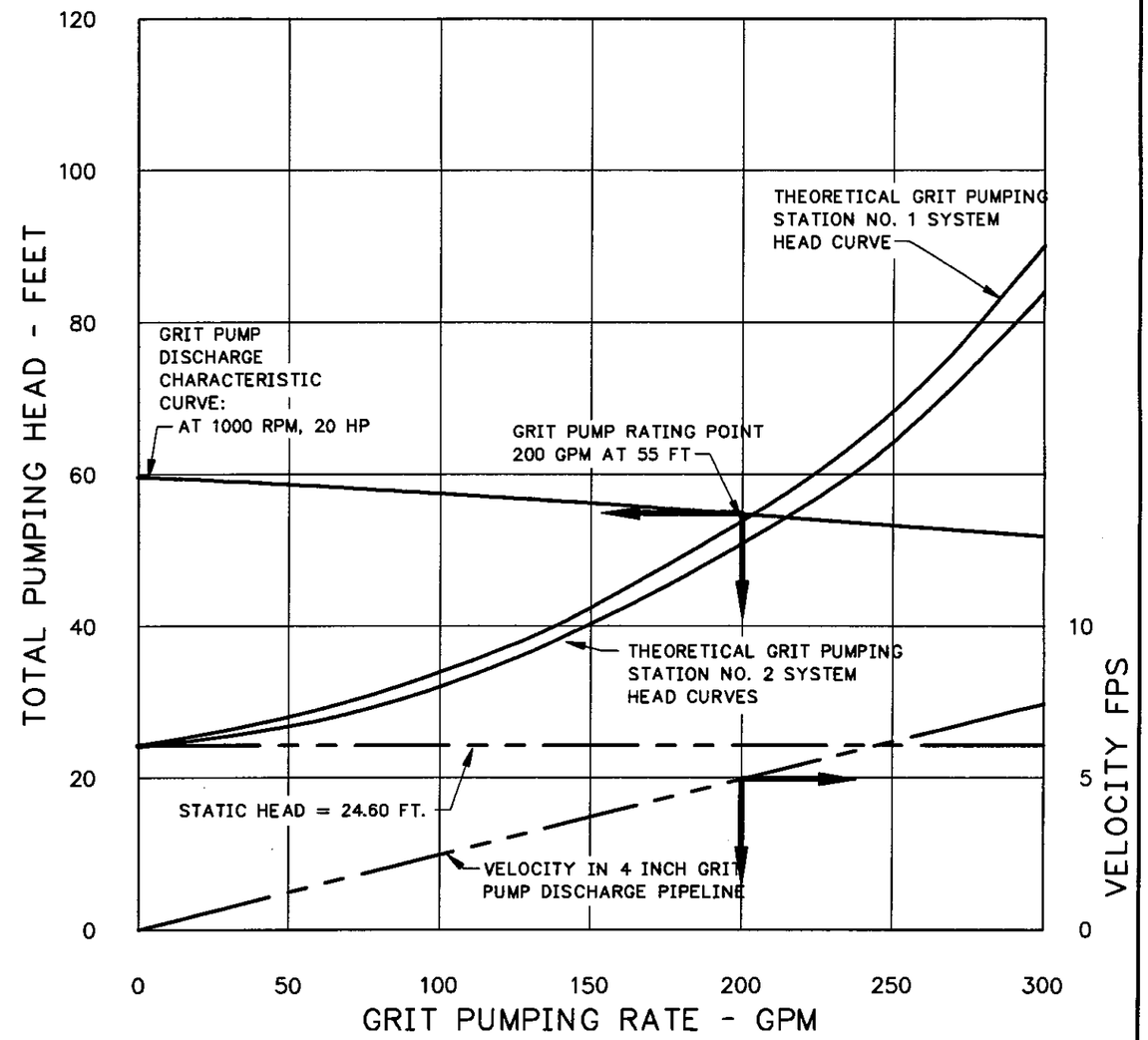

FIGURE III-SG-SG1-7
GRIT PUMP DISCHARGE CURVE
SCREEN AND GRIT BUILDING NO. 2

FIGURE III-SG-SG1-6
GRIT PUMP DISCHARGE CURVE
SCREEN AND GRIT BUILDING NO.1

FIGURE III-SG-SG2-7
GRIT PUMP DISCHARGE CURVE
SCREEN AND GRIT BUILDING NO.2

GREELY AND HANSEN
ENGINEERS

FILE: SG-SG-7 1:1 03/02/99 10:52 GH-E

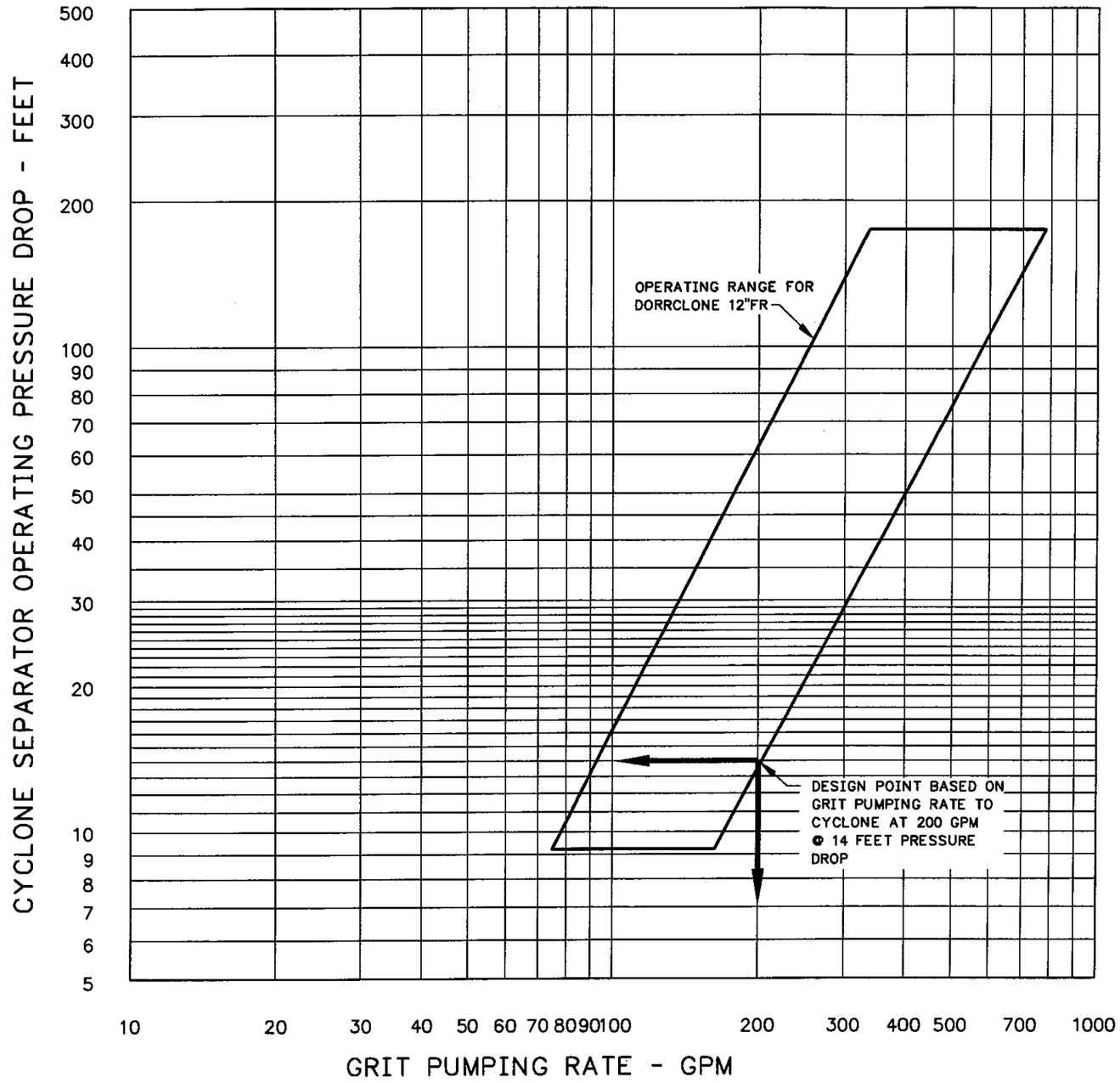

FIGURE III-SG-SG1/SG2-8
CYCLONE GRIT SEPARATOR OPERATING CURVE

FILE: SG-SG-8 1:1 03/02/99 10:58 GH-E

GREELEY AND HANSEN
ENGINEERS

FIGURE III-SG-SG1/SG2-8
CYCLONE GRIT SEPARATOR
OPERATING CURVE

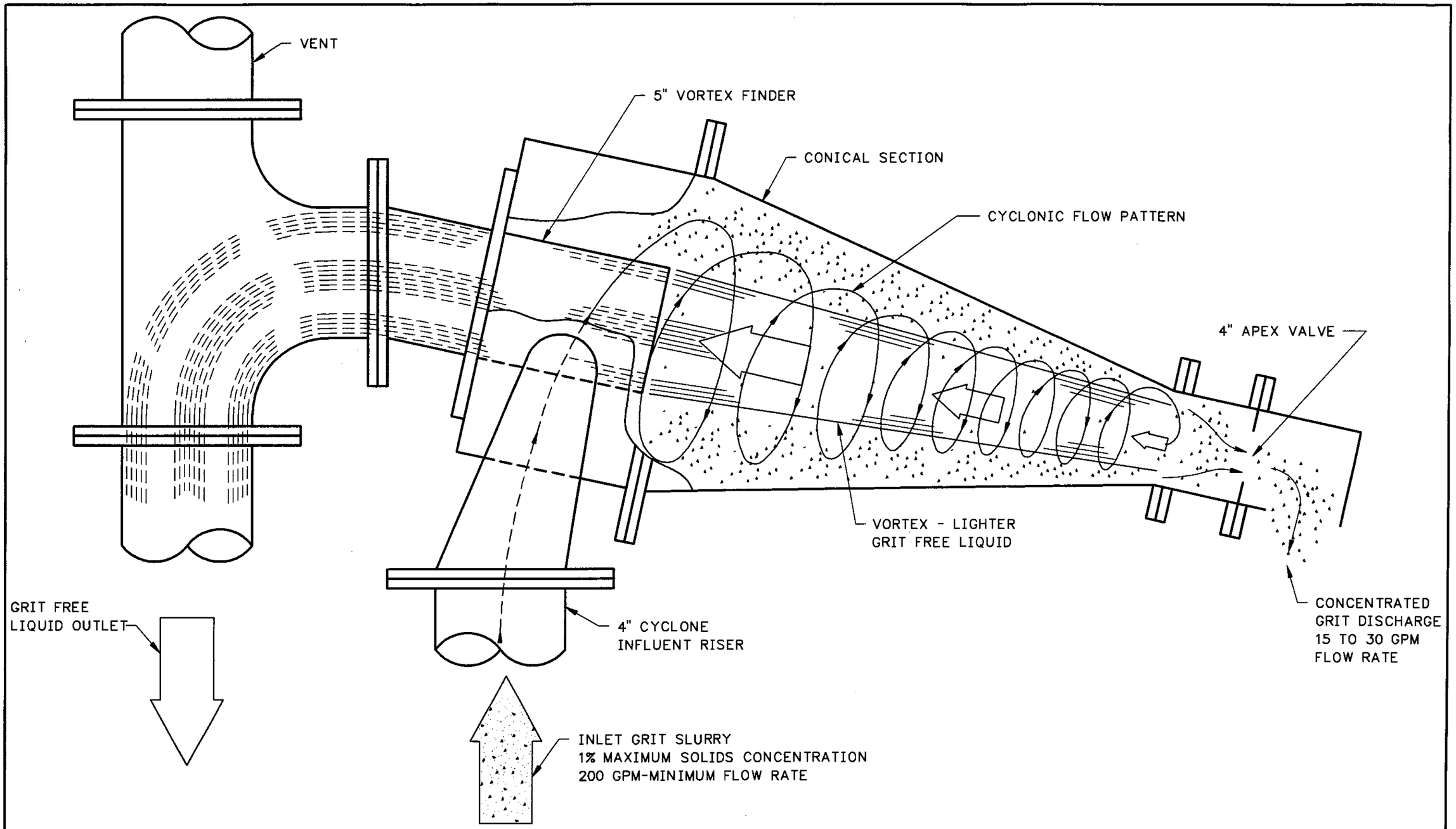

FIGURE III-SG-SG1/SG2-9
CYCLONE GRIT SEPARATOR

FILE: SG-SG-9 1:1 03/02/99 11:02 GH-E

GREELEY AND HANSEN
ENGINEERS

FIGURE III-SG-SG1/SG2-9
SCREEN AND GRIT BUILDING NO. 1&2
CYCLONE GRIT SEPARATOR

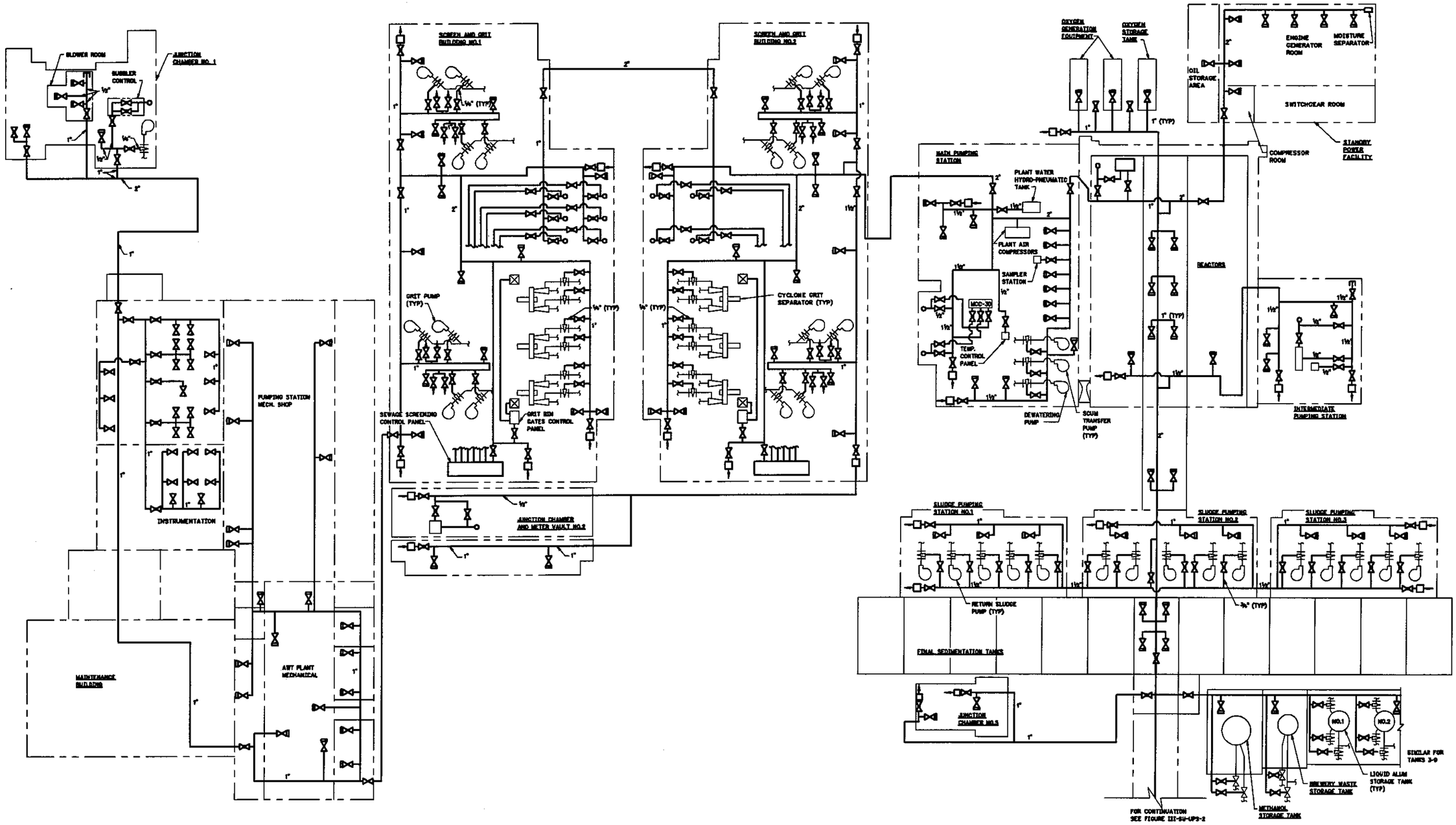

FIGURE III-SU-UPS-1 PLANT AIR DIAGRAM

GREELEY AND HANSEN
ENGINEERS

FIGURE III-SU-UPS-1
PLANT AIR DIAGRAM

FILE: SU-UPS-1 1:1 03/02/99 09:01 GH-E

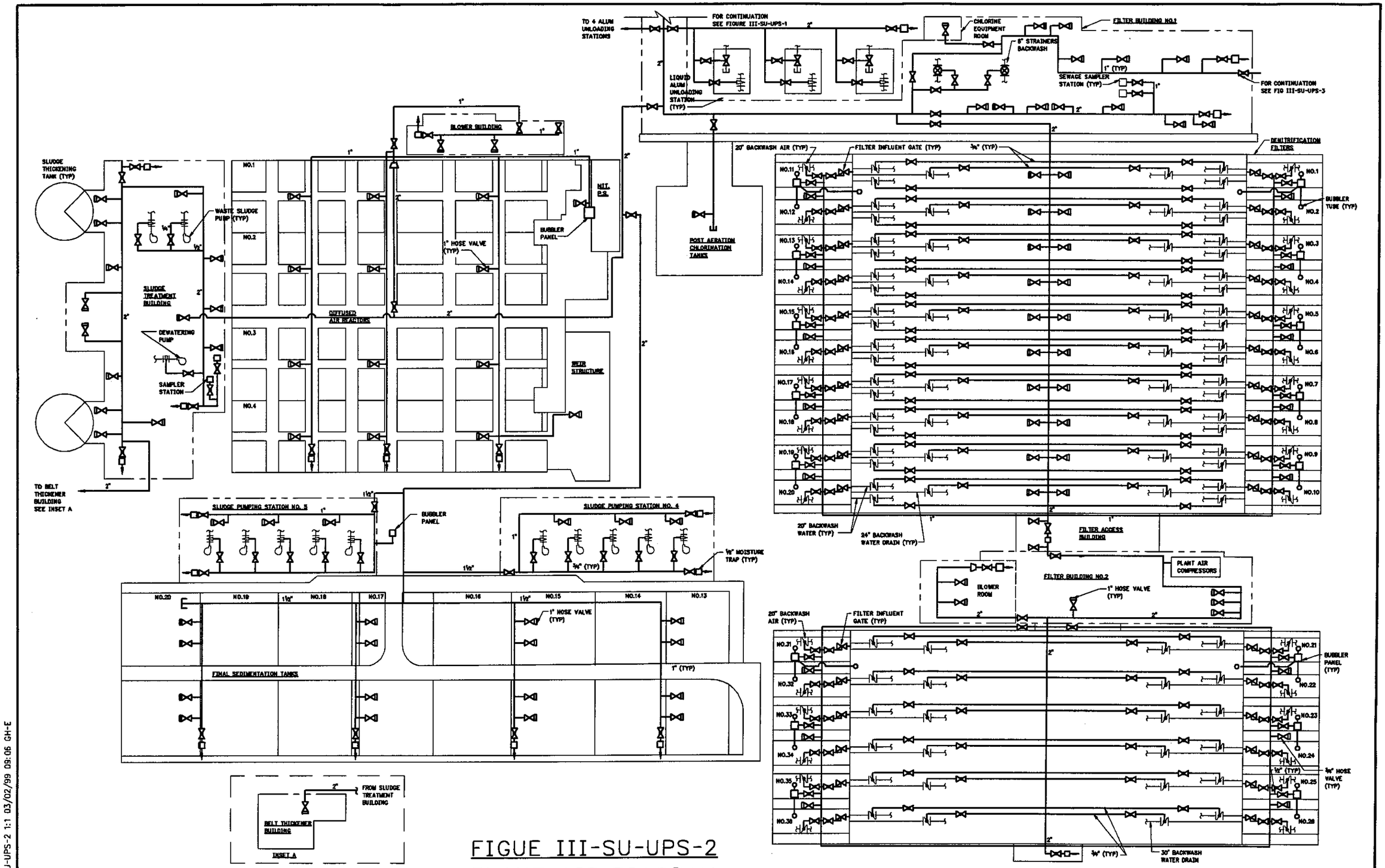

FIGUE III-SU-UPS-2
PLANT AIR DIAGRAM

GREELEY AND HANSEN
ENGINEERS

FIGURE III-SU-UPS-2
PLANT AIR DIAGRAM

FILE: SU-UPS-2 1:1 03/02/99 09:06 GH-E

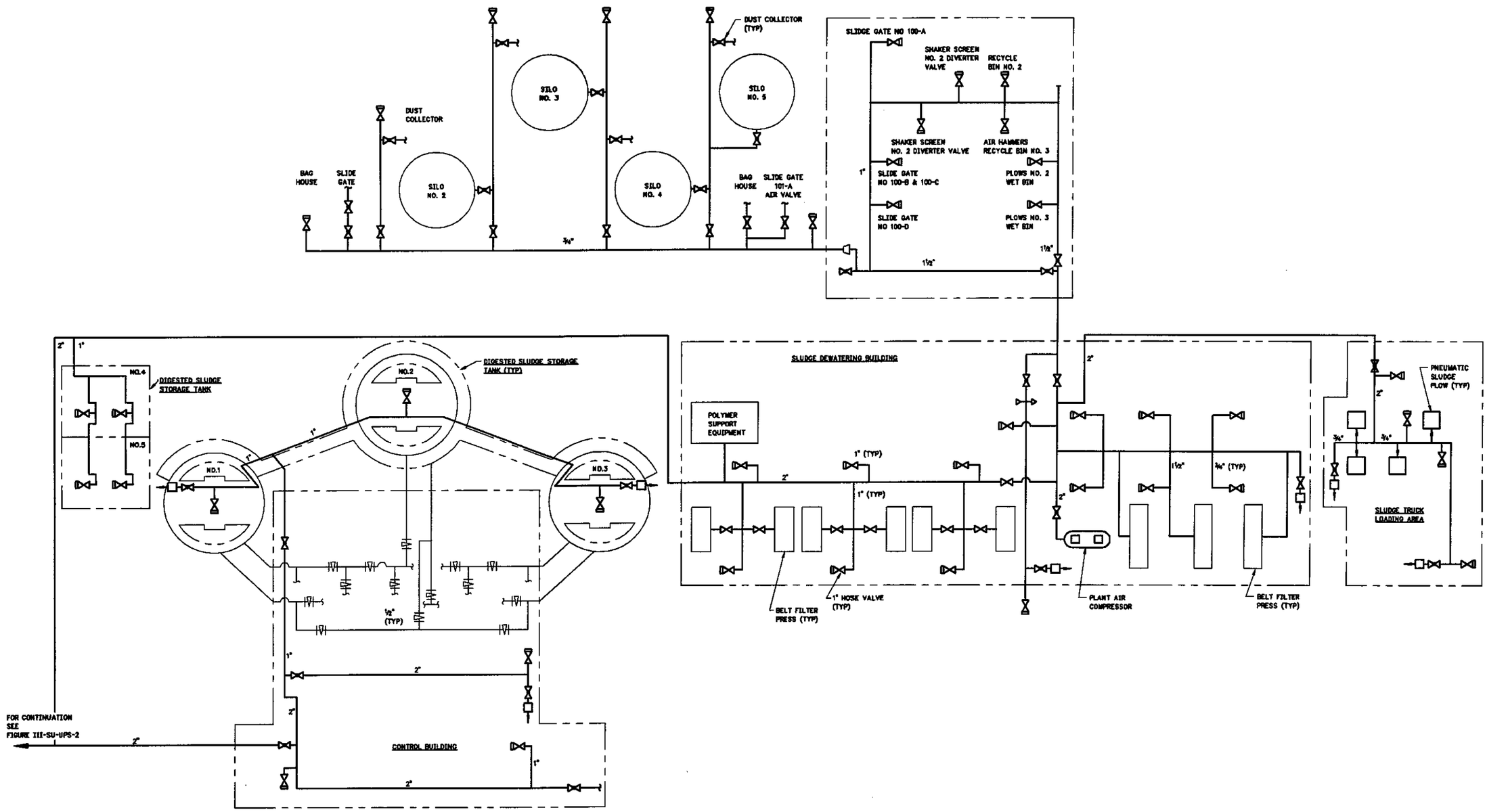

FIGURE III-SU-UPS-3 PLANT AIR DIAGRAM

GREELEY AND HANSEN
ENGINEERS

FIGURE III-SU-UPS-3
PLANT AIR DIAGRAM

FILE: SU-UPS-3 1:1 03/02/99 09:15 GH-E

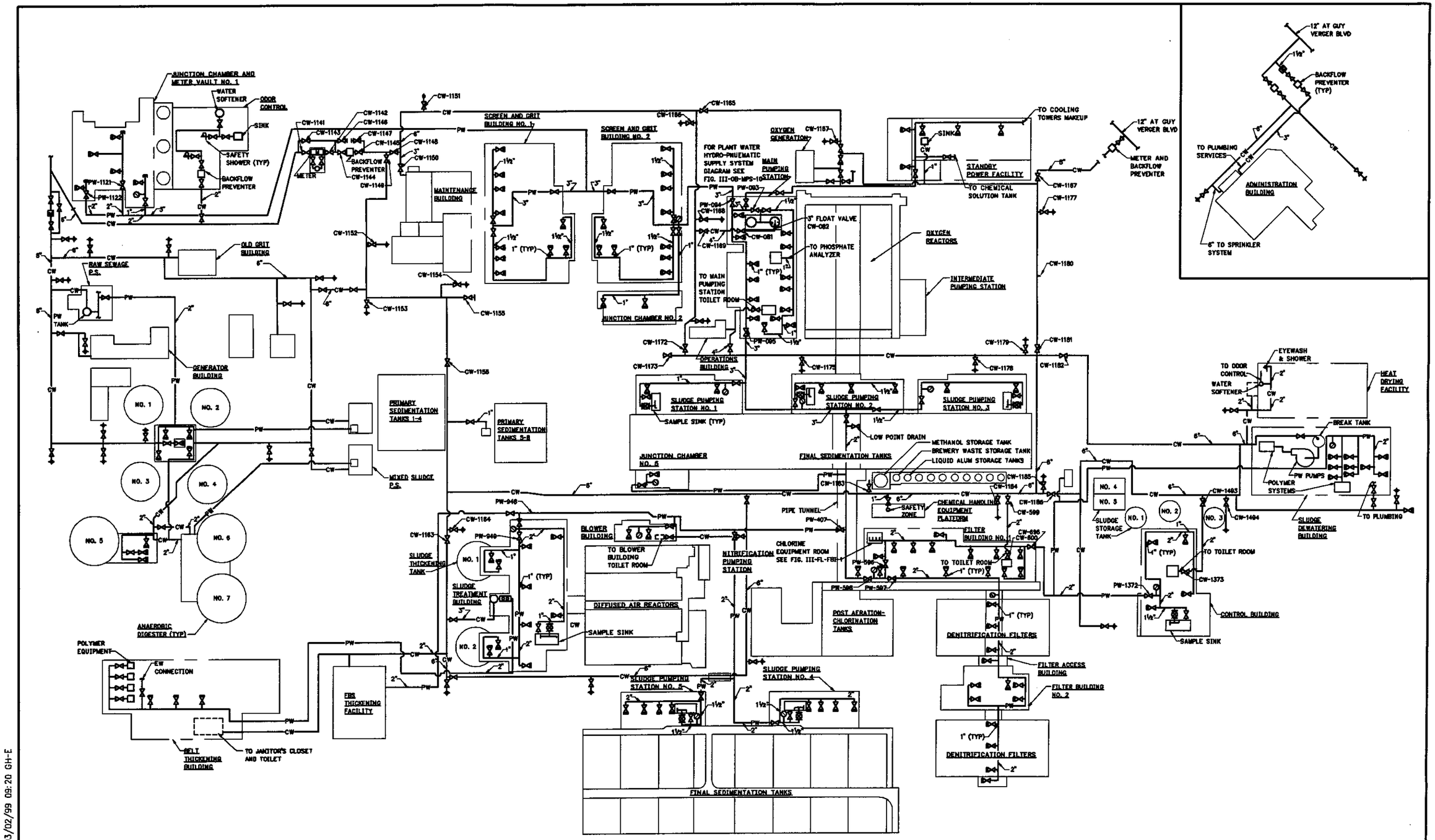

FIGURE III-SU-UPS-4
PLANT AND CITY WATER DIAGRAM

GREELEY AND HANSEN
ENGINEERS

FILE: SU-UPS-4 1:1 03/02/99 09:20 GH-E

FIGURE III-SU-UPS-4
PLANT AND CITY WATER DIAGRAM

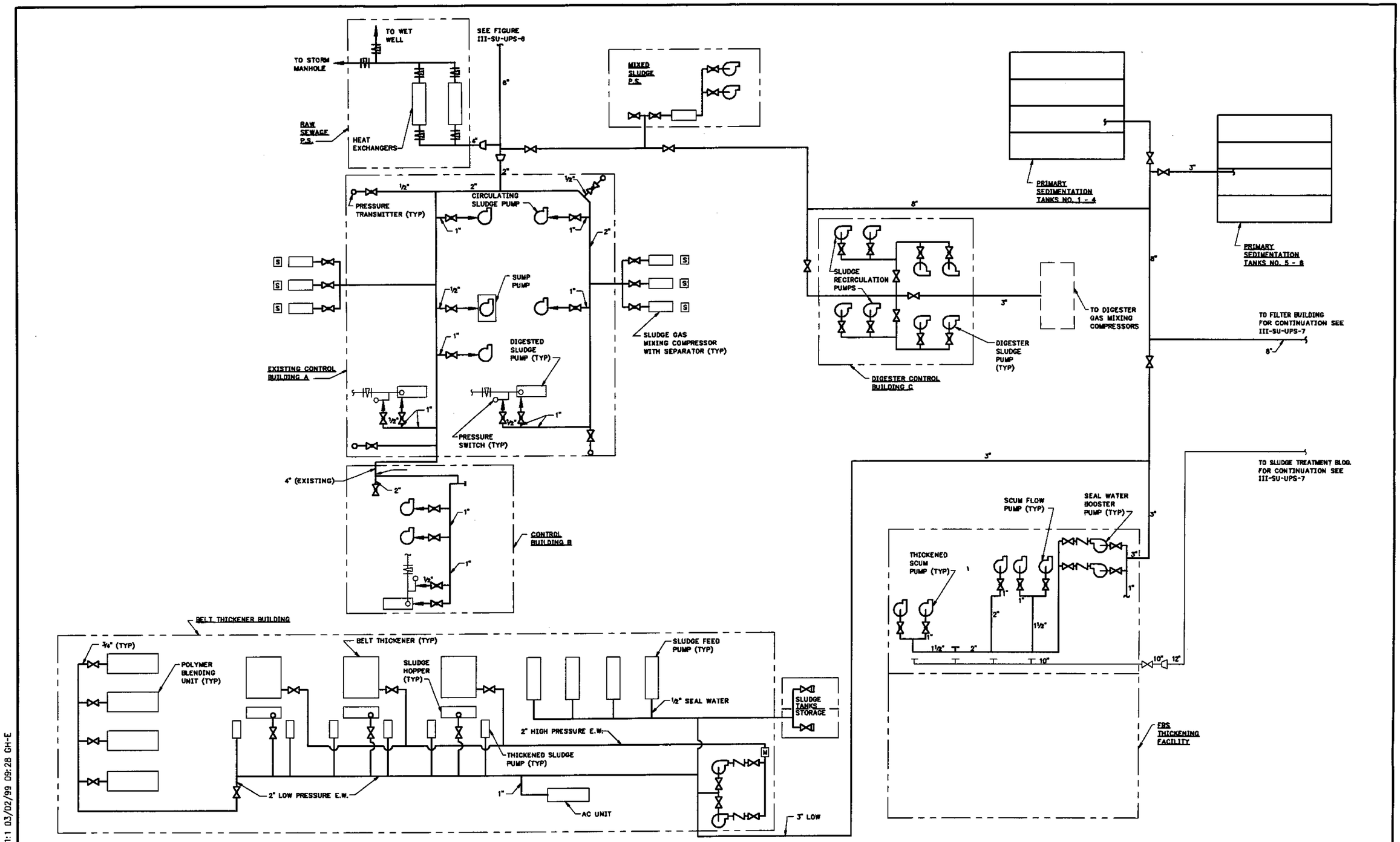

FIGURE III-SU-UPS-5 GENERAL PURPOSE EFFLUENT WATER - WEST SECTION

GREELEY AND HANSEN ENGINEERS

FILE: SU-UPS-5 1:1 03/02/99 09:28 GH-E

FIGURE III-SU-UPS-5
GENERAL PURPOSE
EFFLUENT WATER
WEST SECTION

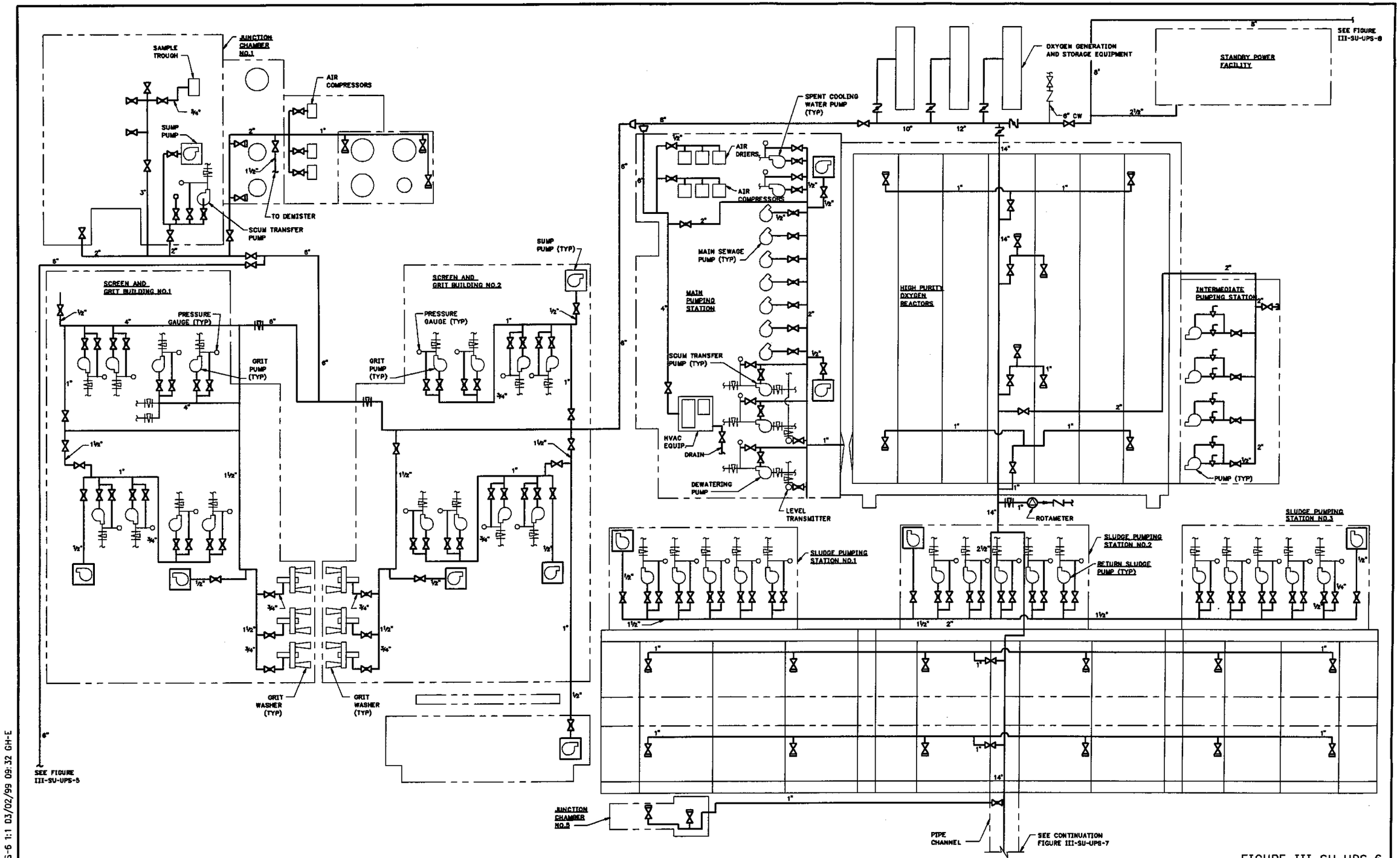

FILE: SU-UPS-6 1:1 03/02/99 09:32 GH-E

GREELEY AND HANSEN ENGINEERS

FIGURE III-SU-UPS-6 GENERAL PURPOSE EFFLUENT WATER - NORTH SECTION

FIGURE III-SU-UPS-6
GENERAL PURPOSE
EFFLUENT WATER
NORTH SECTION

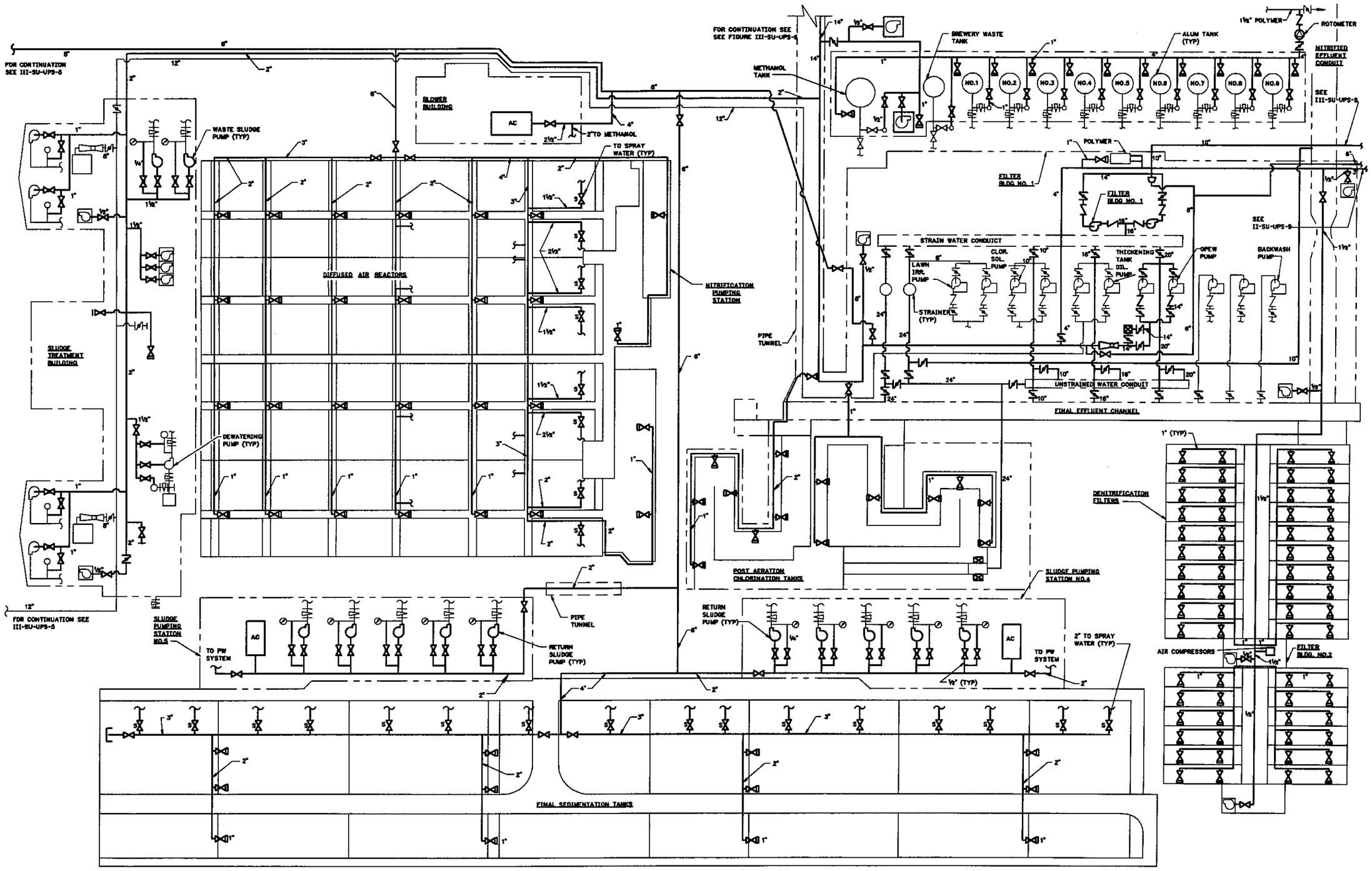

GREELEY AND HANSEN ENGINEERS

FIGURE III-SU-UPS-7 GENERAL PURPOSE EFFLUENT WATER - SOUTH SECTION

FIGURE III-SU-UPS-7
GENERAL PURPOSE
EFFLUENT WATER
SOUTH SECTION

FILE: SU-UPS-7 1:1 03/02/99 09:38 GH-E

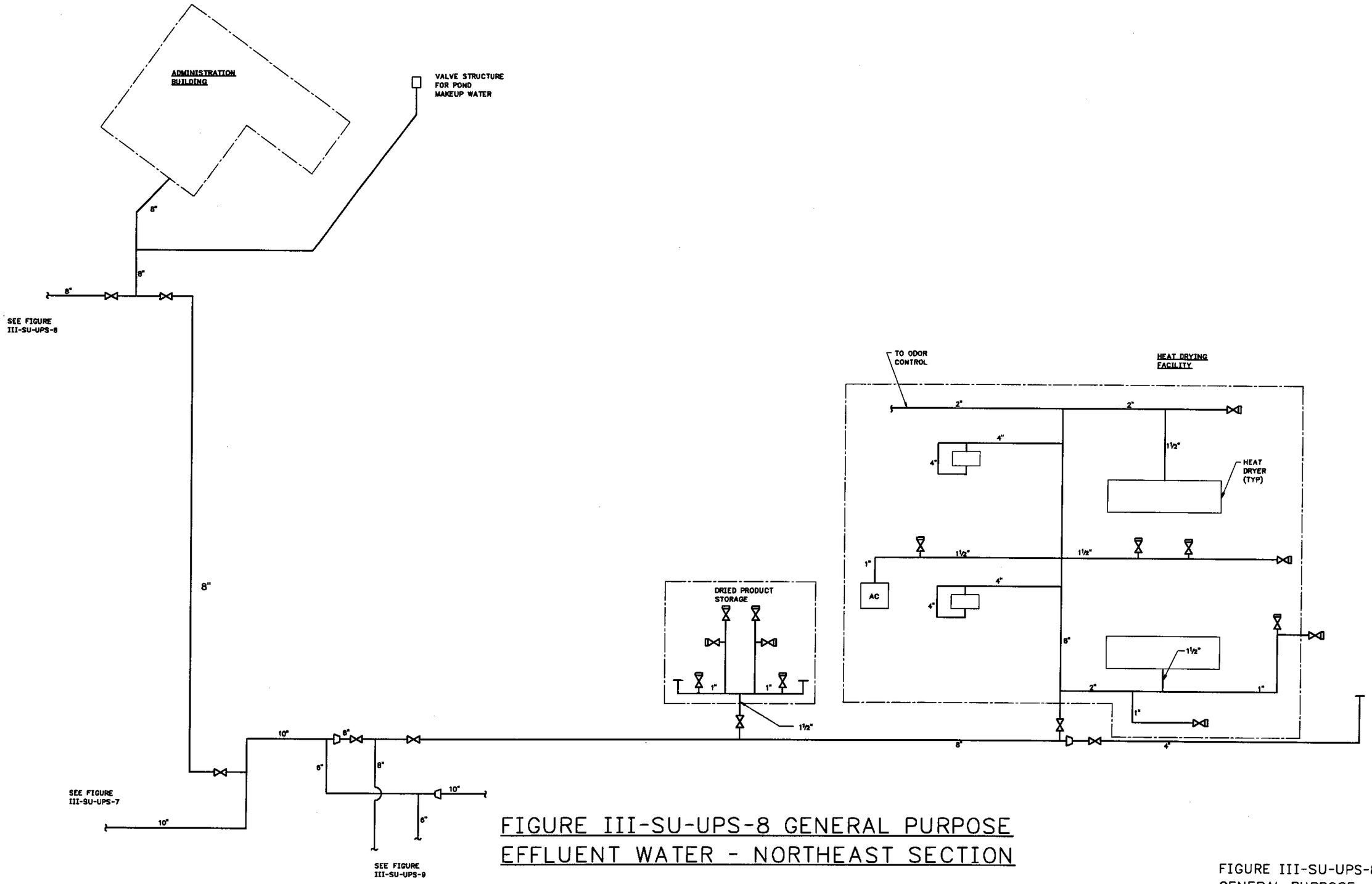

FIGURE III-SU-UPS-8 GENERAL PURPOSE EFFLUENT WATER - NORTHEAST SECTION

FILE: SU-UPS-8 1:1 03/02/99 09:44 GH-E

GREELEY AND HANSEN ENGINEERS

FIGURE III-SU-UPS-8
GENERAL PURPOSE
EFFLUENT WATER
NORTHEAST SECTION

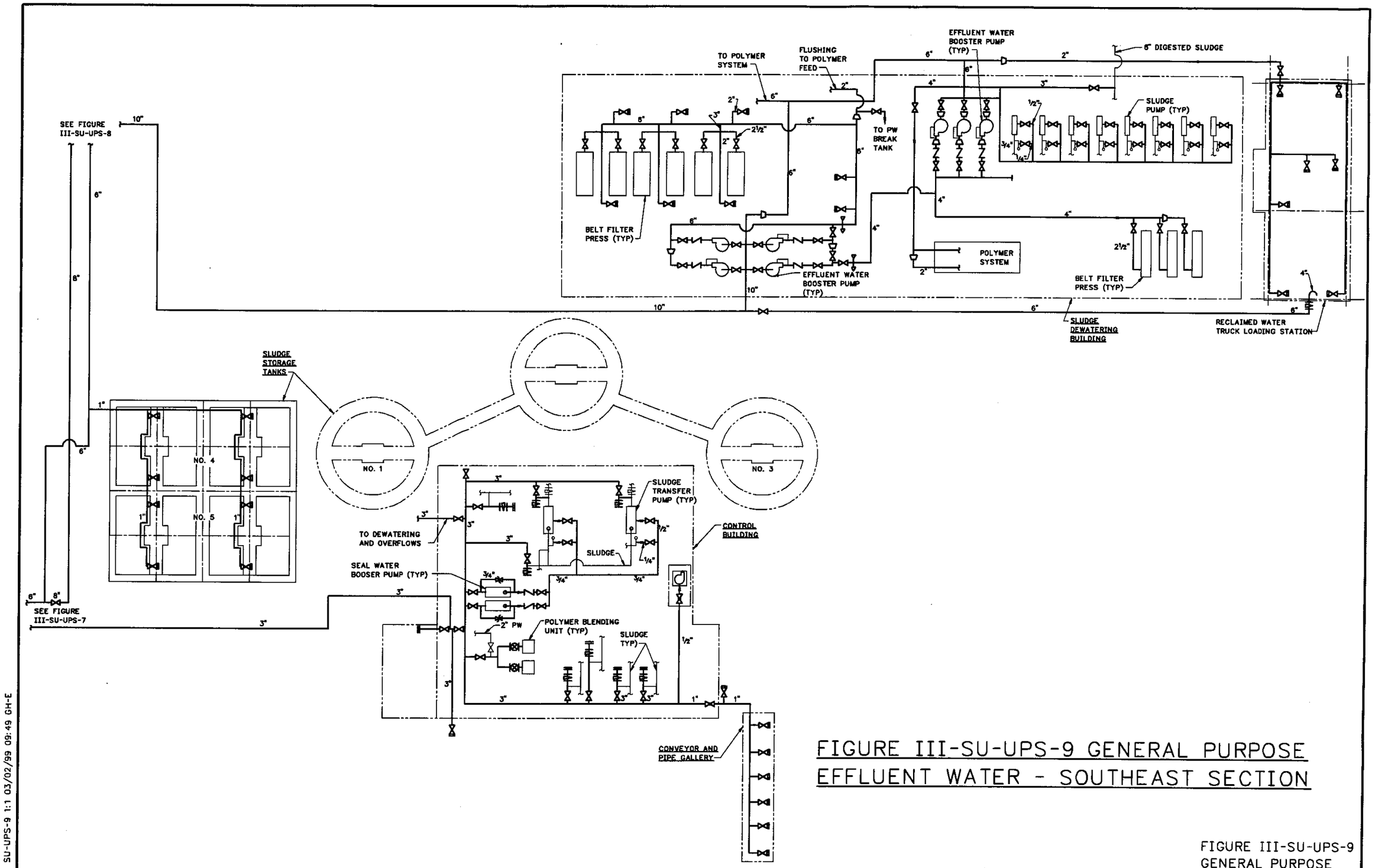

FIGURE III-SU-UPS-9 GENERAL PURPOSE EFFLUENT WATER - SOUTHEAST SECTION

FILE: SU-UPS-9 1:1 03/02/99 09:49 GH-E

GREELEY AND HANSEN
ENGINEERS

FIGURE III-SU-UPS-9
GENERAL PURPOSE
EFFLUENT WATER
SOUTHEAST SECTION

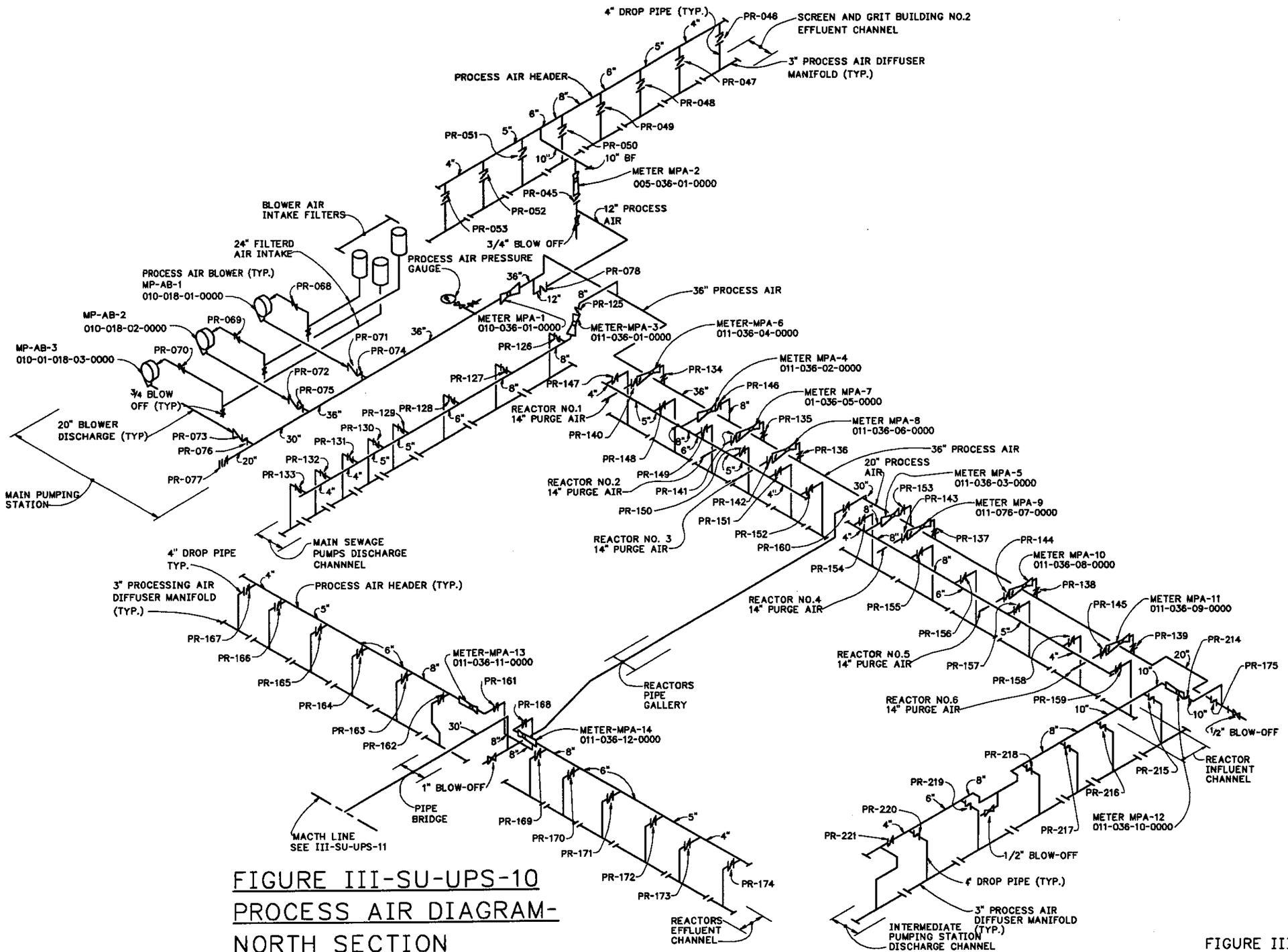

FIGURE III-SU-UPS-10
PROCESS AIR DIAGRAM-
NORTH SECTION

GREELEY AND HANSEN
ENGINEERS

FIGURE III-SU-UPS-10
PROCESS AIR DIAGRAM
NORTH SECTION

FILE: SU-UPS10 1:1 03/02/99 09:56 GH-E

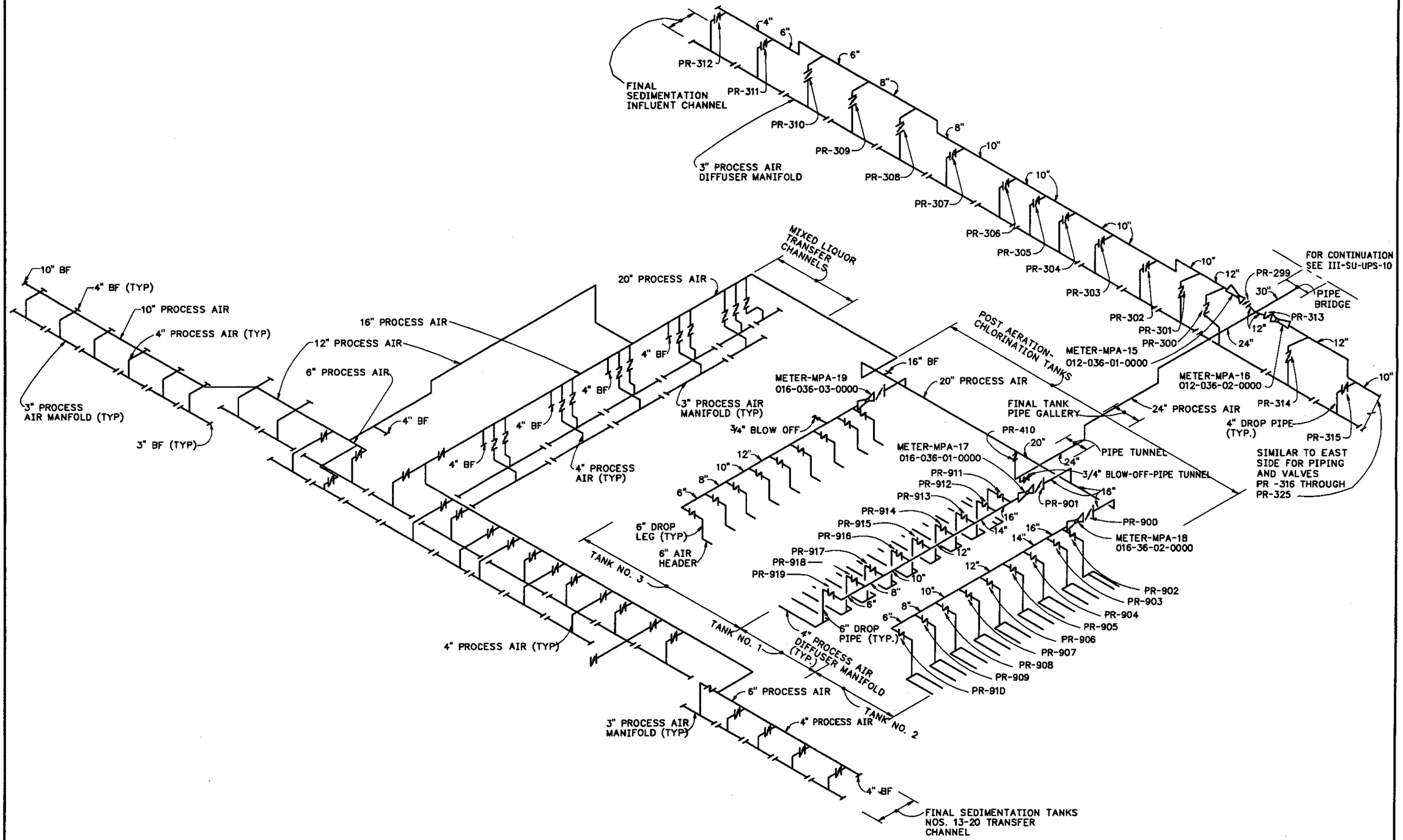

FIGURE III-SU-UPS-11 PROCESS AIR DIAGRAM SOUTH SECTION

GREELEY AND HANSEN ENGINEERS

FILE: SU-UPS11 1:1 03/02/99 09:59 GH-E

FIGURE III-SU-UPS-11
PROCESS AIR DIAGRAM
SOUTH SECTION

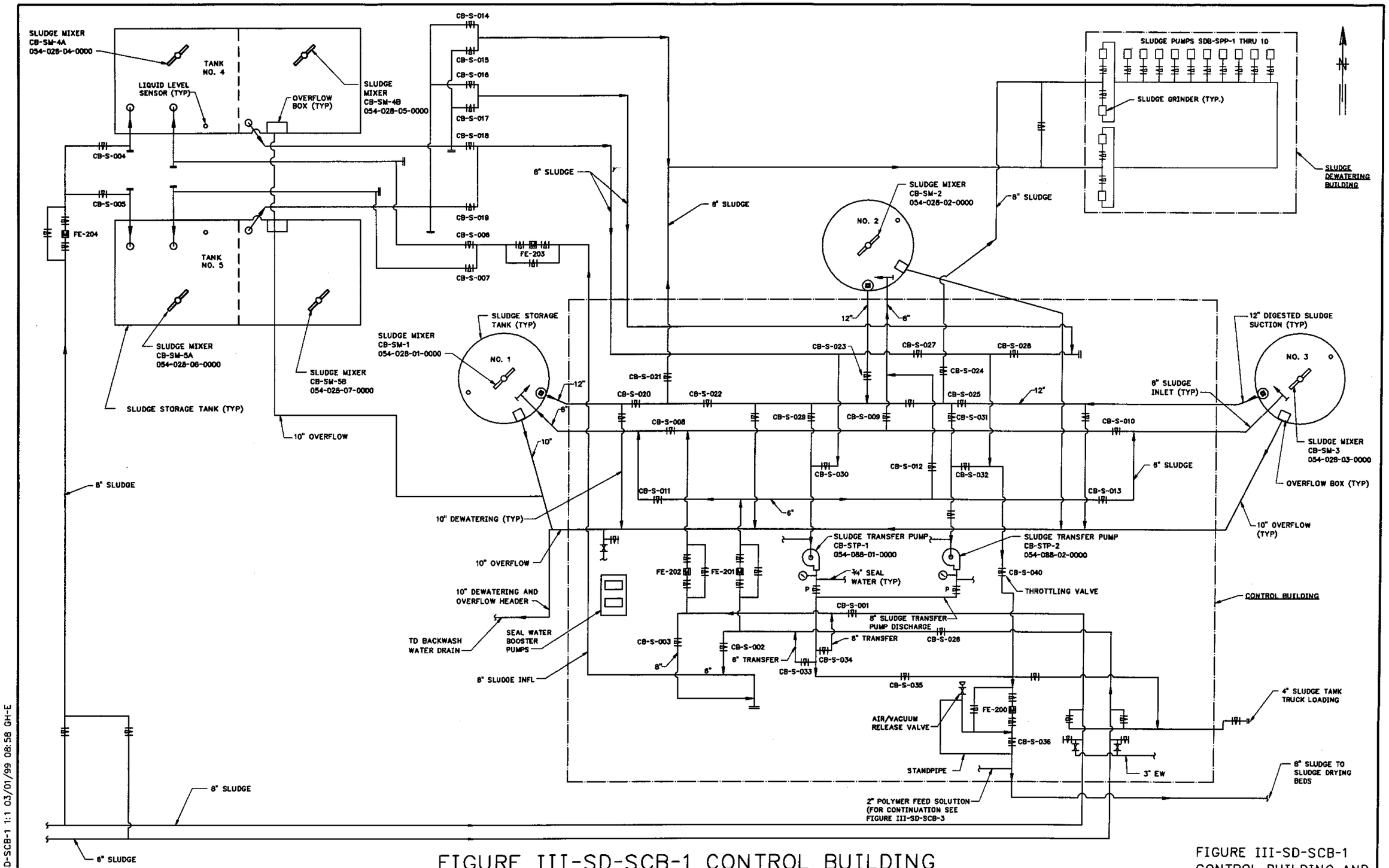

FILE: SD-SCB-1 1:1 03/01/99 08:58 GH-E

GREELEY AND HANSEN ENGINEERS

FIGURE III-SD-SCB-1 CONTROL BUILDING AND SLUDGE STORAGE TANKS SCHEMATIC

FIGURE III-SD-SCB-1 CONTROL BUILDING AND SLUDGE STORAGE TANK SCHEMATIC

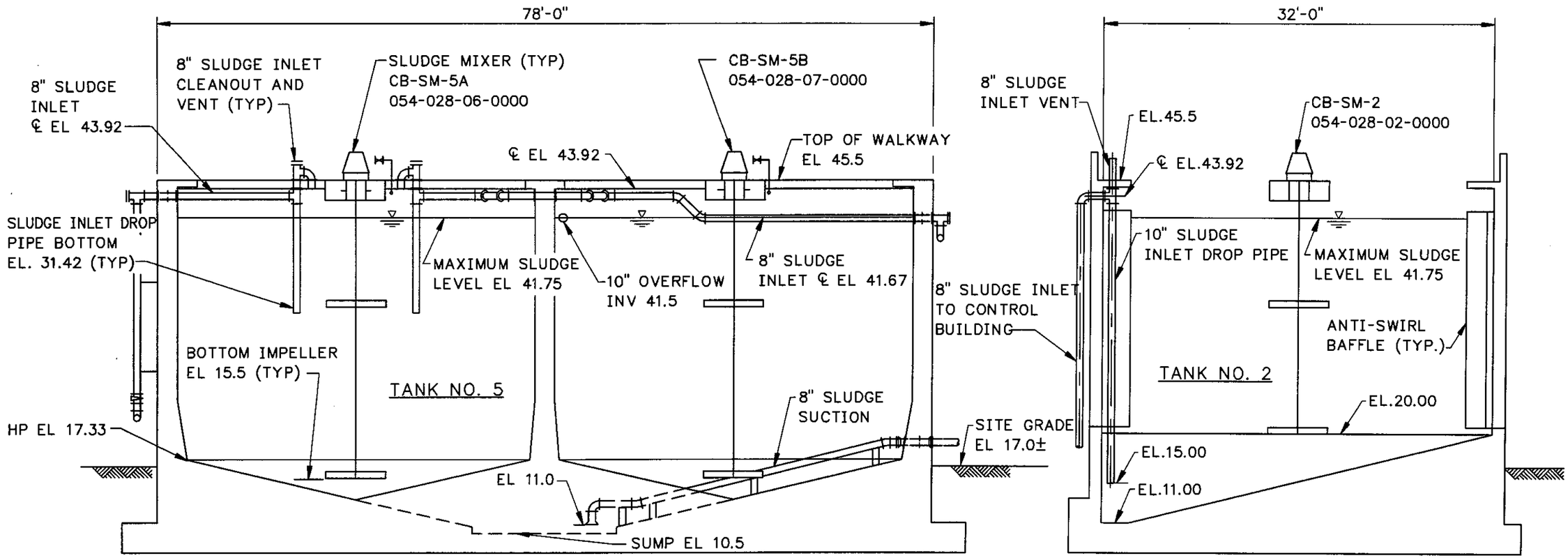

TANK NO. 5
SIMILAR FOR TANK NO. 4

TANK NO. 2
SIMILAR FOR TANKS NO. 1 AND 3

FIGURE III-SD-SCB-2 SLUDGE STORAGE TANK CROSS SECTION

FILE: SD-SCB-2 1:1 03/01/99 09:29 GH-E

GREELEY AND HANSEN
ENGINEERS

FIGURE III-SD-SCB-2
SLUDGE STORAGE TANK
CROSS SECTION

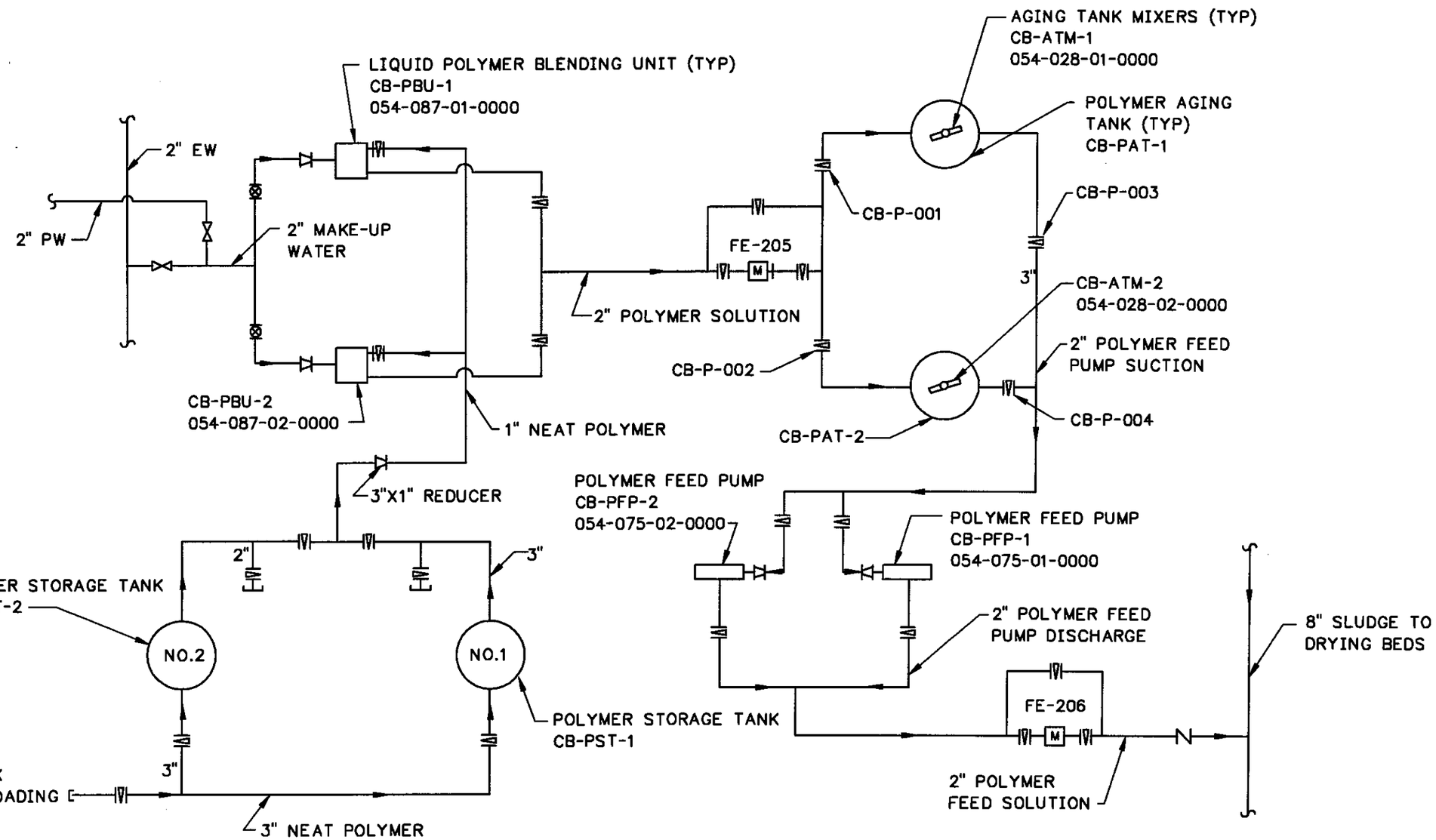

FIGURE III-SD-SCB-3 POLYMER SYSTEM DIAGRAM

FILE: SD-SCB-3 1:1 03/01/99 09:33 GH-E

GREELEY AND HANSEN
ENGINEERS

FIGURE III-SD-SCB-3
POLYMER SYSTEM
DIAGRAM

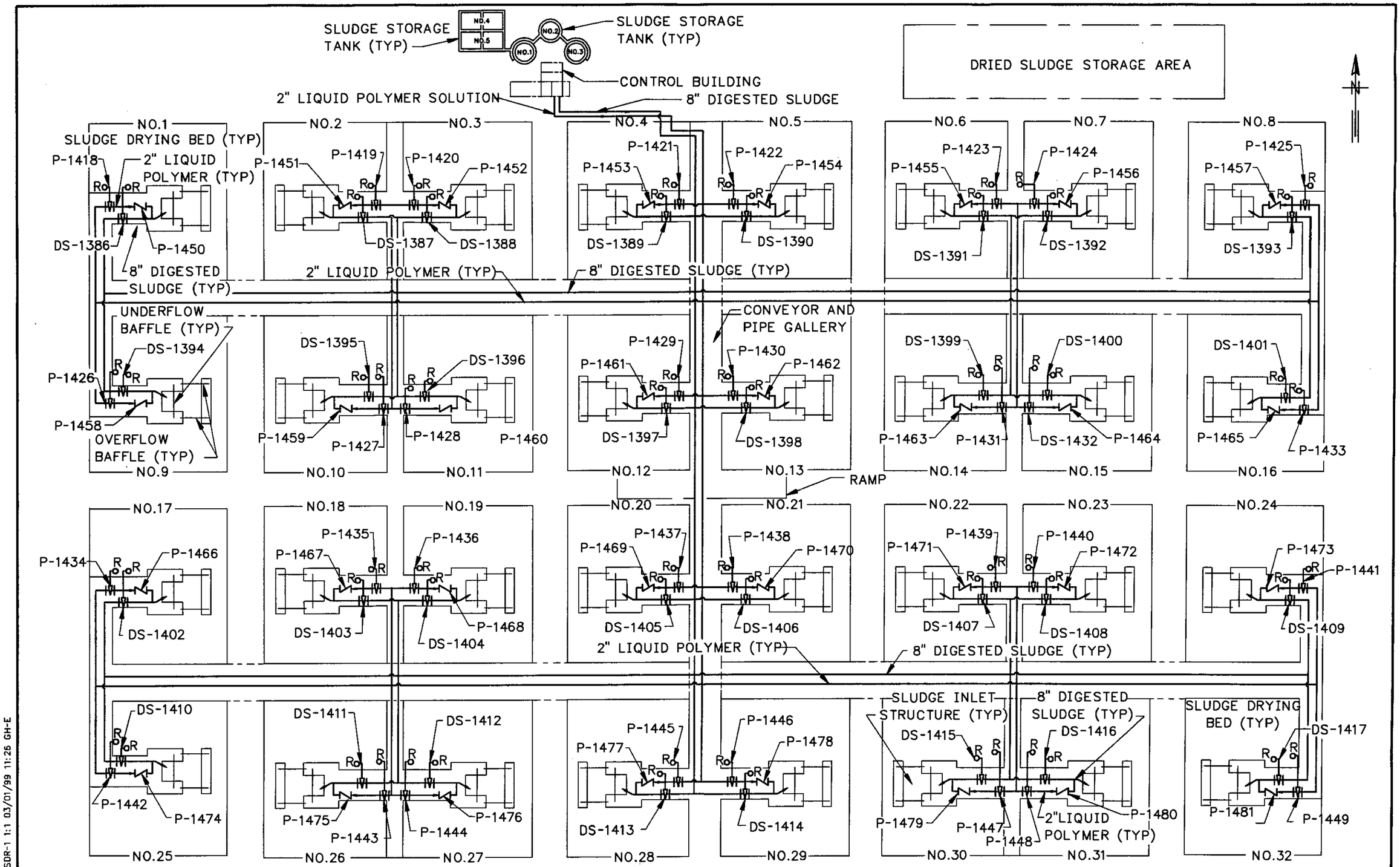

GREELEY AND HANSEN ENGINEERS

FIGURE III-SD-SDR-1 SLUDGE DRYING BEDS - INFLUENT SCHEMATIC

FIGURE III-SD-SDR-1
SLUDGE DRYING BEDS
INFLUENT SCHEMATIC

FILE: SD-SDR-1 1:1 03/01/99 11:26 GH-E

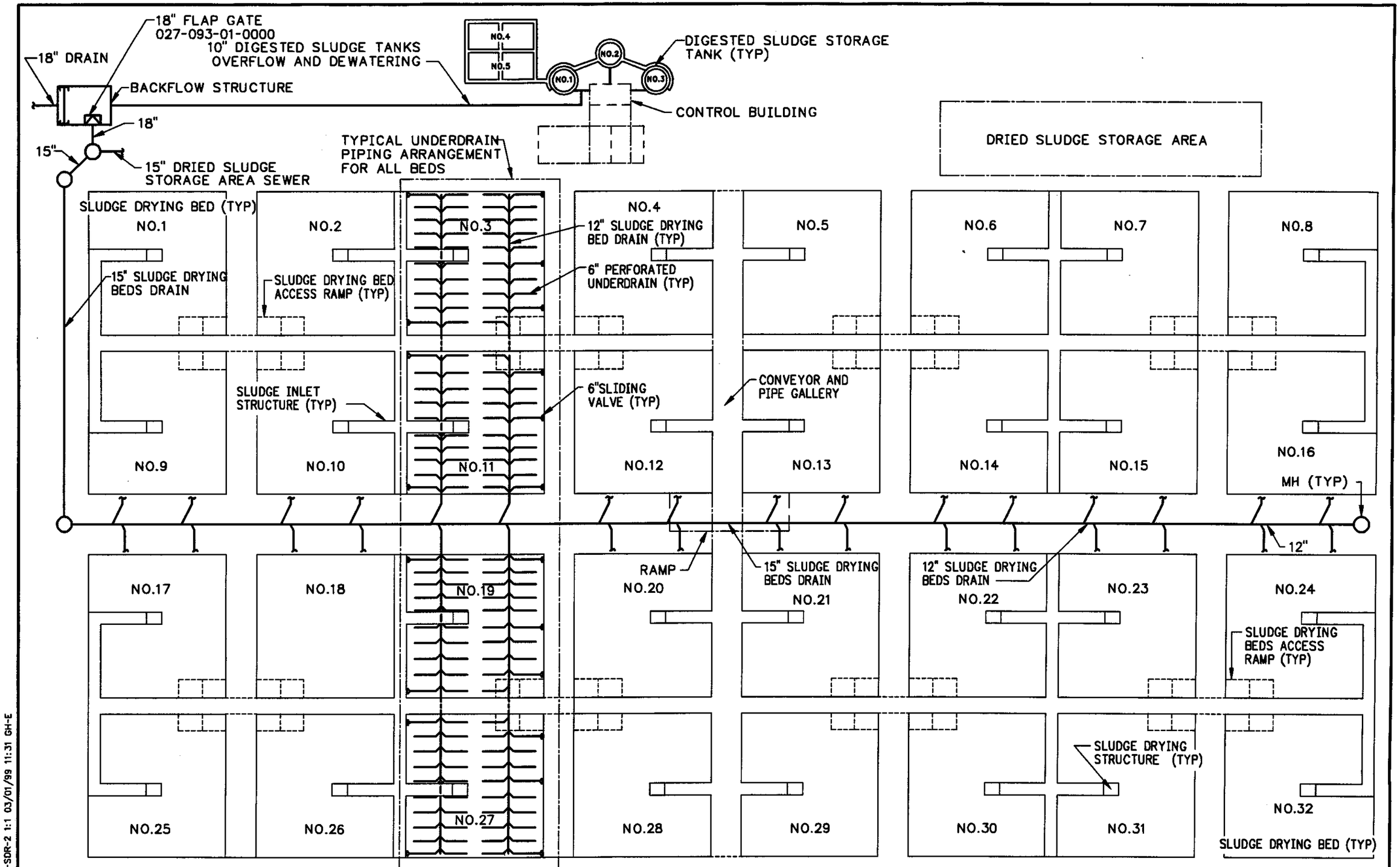

FILE: SD-SDR-2 1:1 03/01/99 11:31 GH-E

GREELEY AND HANSEN
ENGINEERS

FIGURE III-SD-SDR-2 SLUDGE DRYING BEDS - UNDERDRAIN SCHEMATIC

FIGURE III-SD-SDR-2
SLUDGE DRYING BEDS
UNDERDRAIN SCHEMATIC

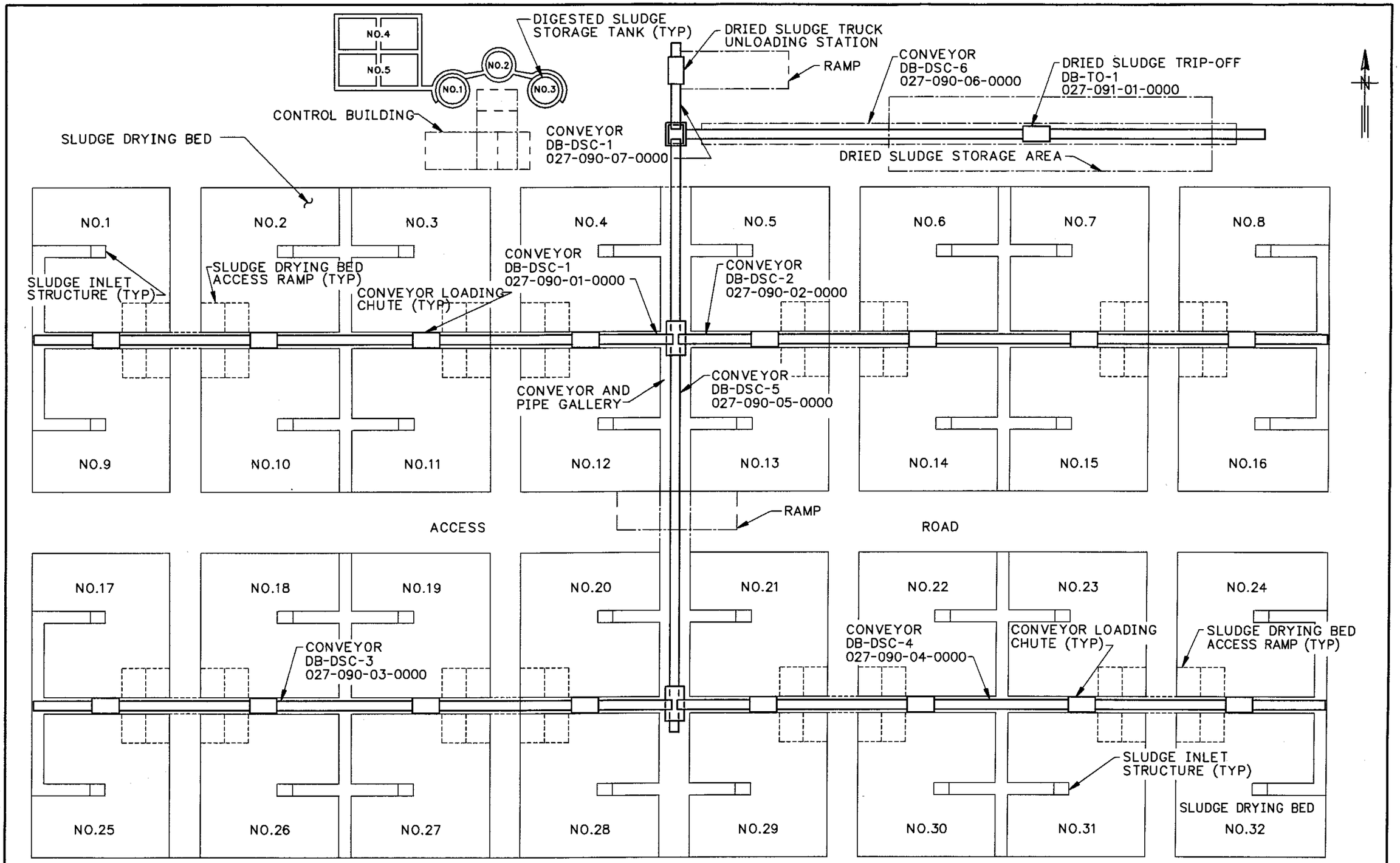

FIGURE III-SD-SDR-3 SLUDGE DRYING BEDS- DRIED SLUDGE CONVEYING

GREELEY AND HANSEN ENGINEERS

FIGURE III-SD-SDR-3
SLUDGE DRYING BEDS
DRIED SLUDGE CONVEYING

FILE: SD-SDR-3 1:1 03/01/99 11:41 GH-E

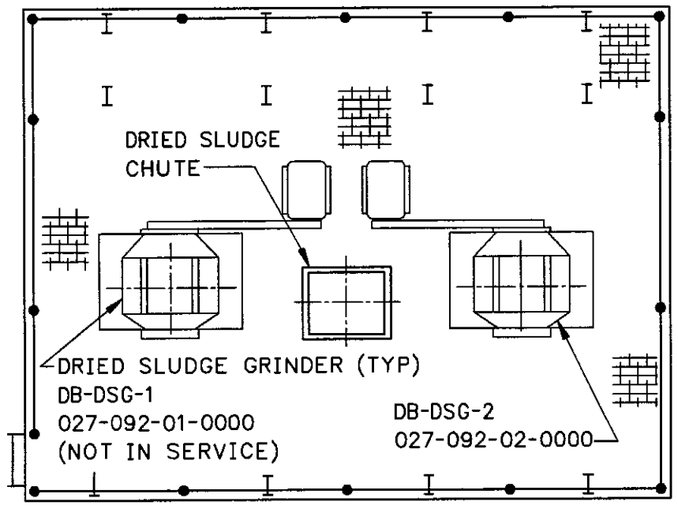

PLAN AT EL 23.33

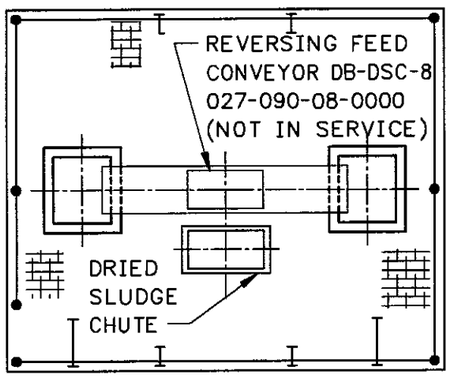

PLAN AT EL. 30.33

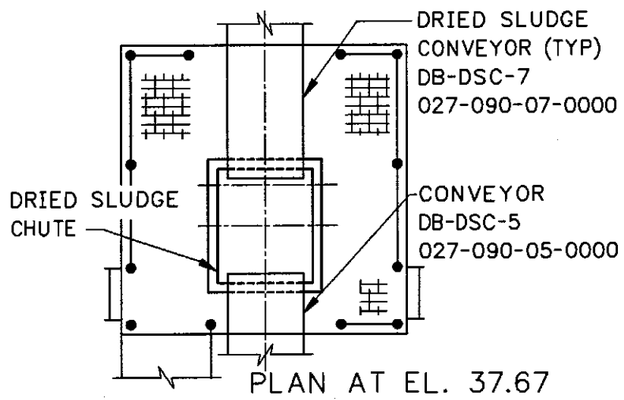

PLAN AT EL. 37.67

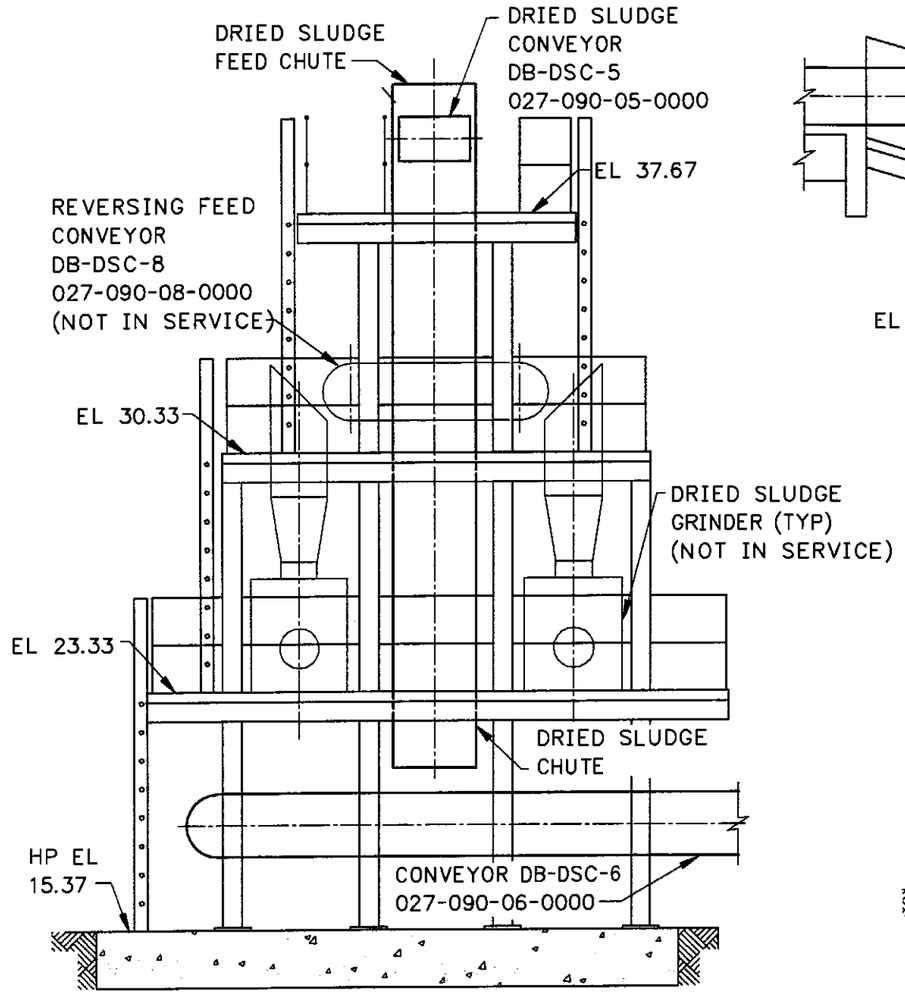

SOUTH ELEVATION

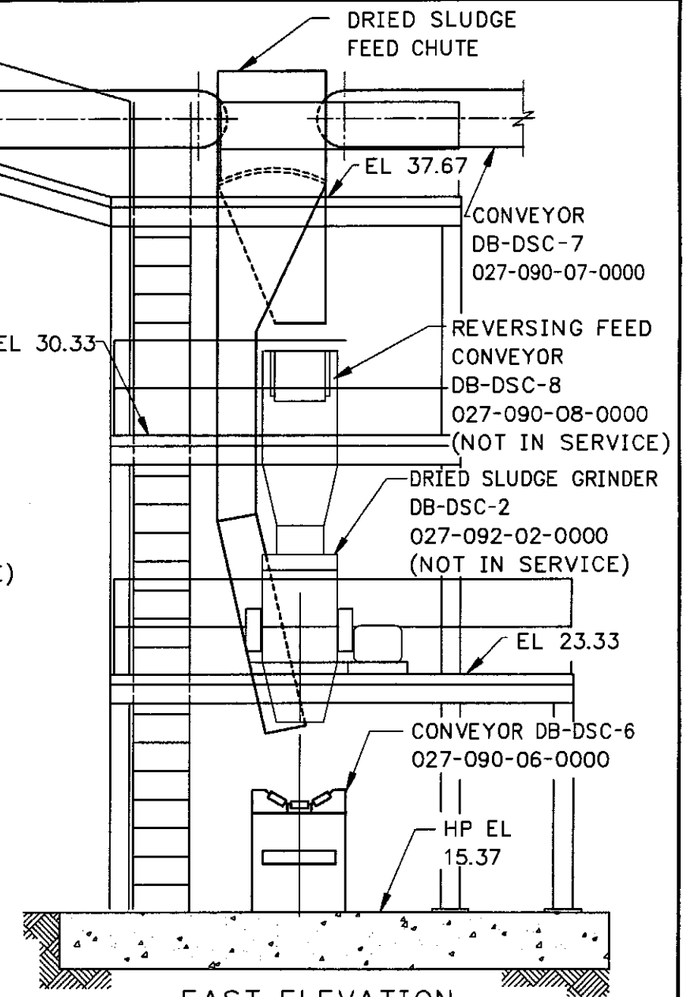

EAST ELEVATION

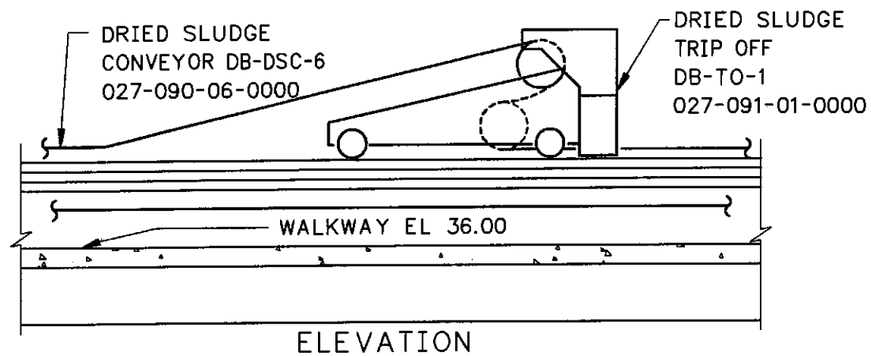

ELEVATION

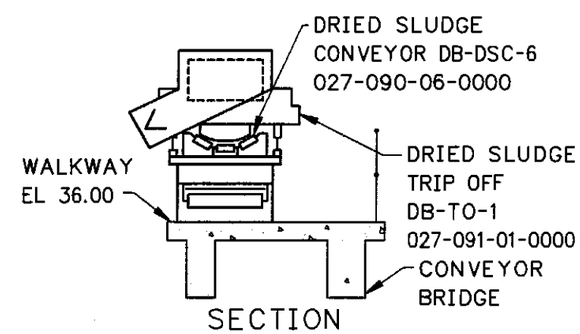

SECTION

FIGURE III-SD-SDR-4
SLUDGE GRINDER STATION PLAN
AND ELEVATIONS AND SLUDGE
TRIP-OFF DETAILS

GREELEY AND HANSEN
ENGINEERS

FILE: SD-SDR-4 1:1 03/01/99 11:48 GH-E

FIGURE III-SD-SDR-4 SLUDGE GRINDER STATION PLANS AND ELEVATIONS AND SLUDGE TRIP-OFF DETAILS

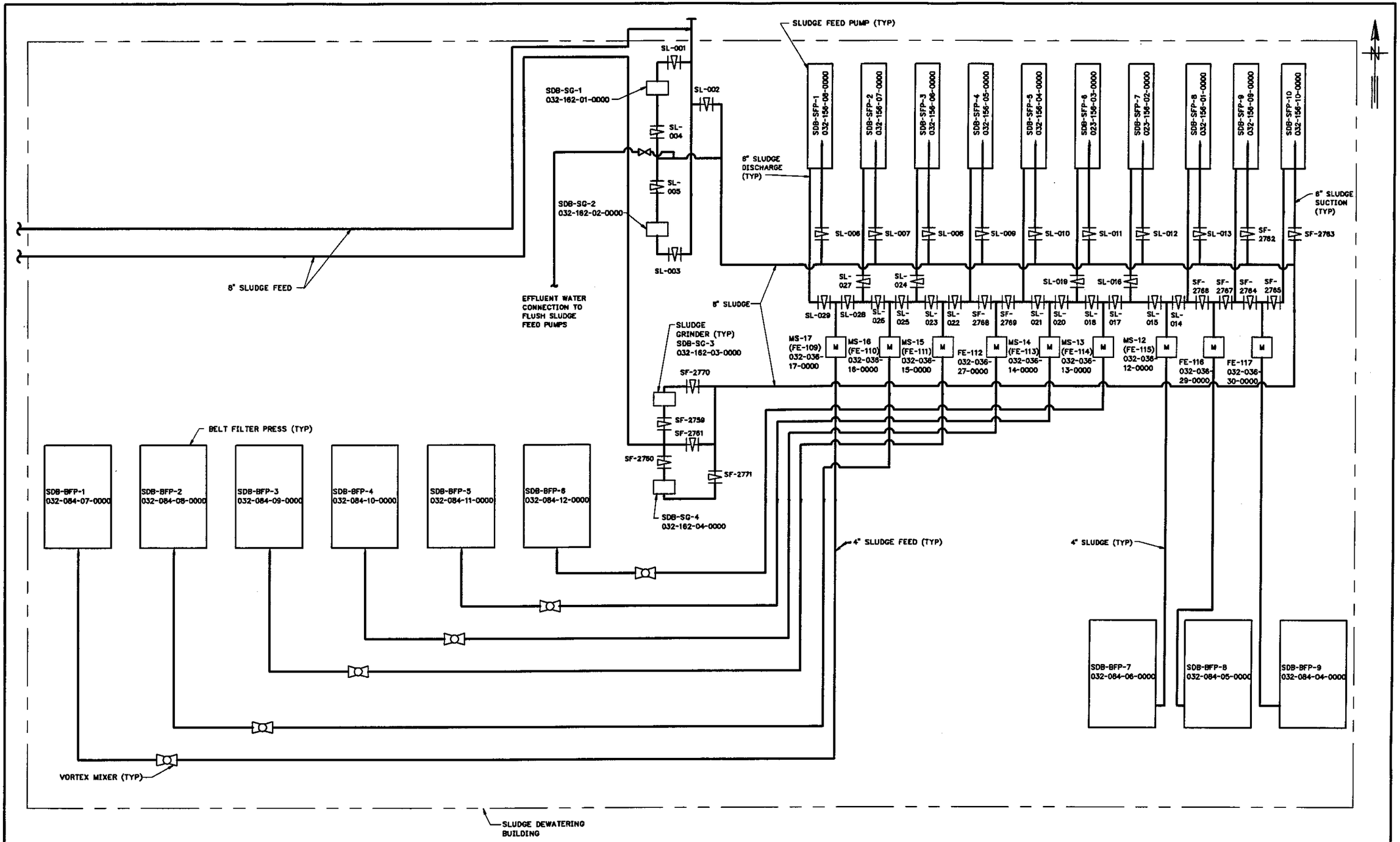

FIGURE III-SD-SDB-1 SLUDGE DEWATERING BUILDING SLUDGE FEED DIAGRAM

GREELEY AND HANSEN ENGINEERS

FIGURE III-SD-SDB-1
SLUDGE DEWATERING BUILDING
SLUDGE FEED DIAGRAM

FILE: SD-SD-1 1:1 03/01/99 09:37 GH-E

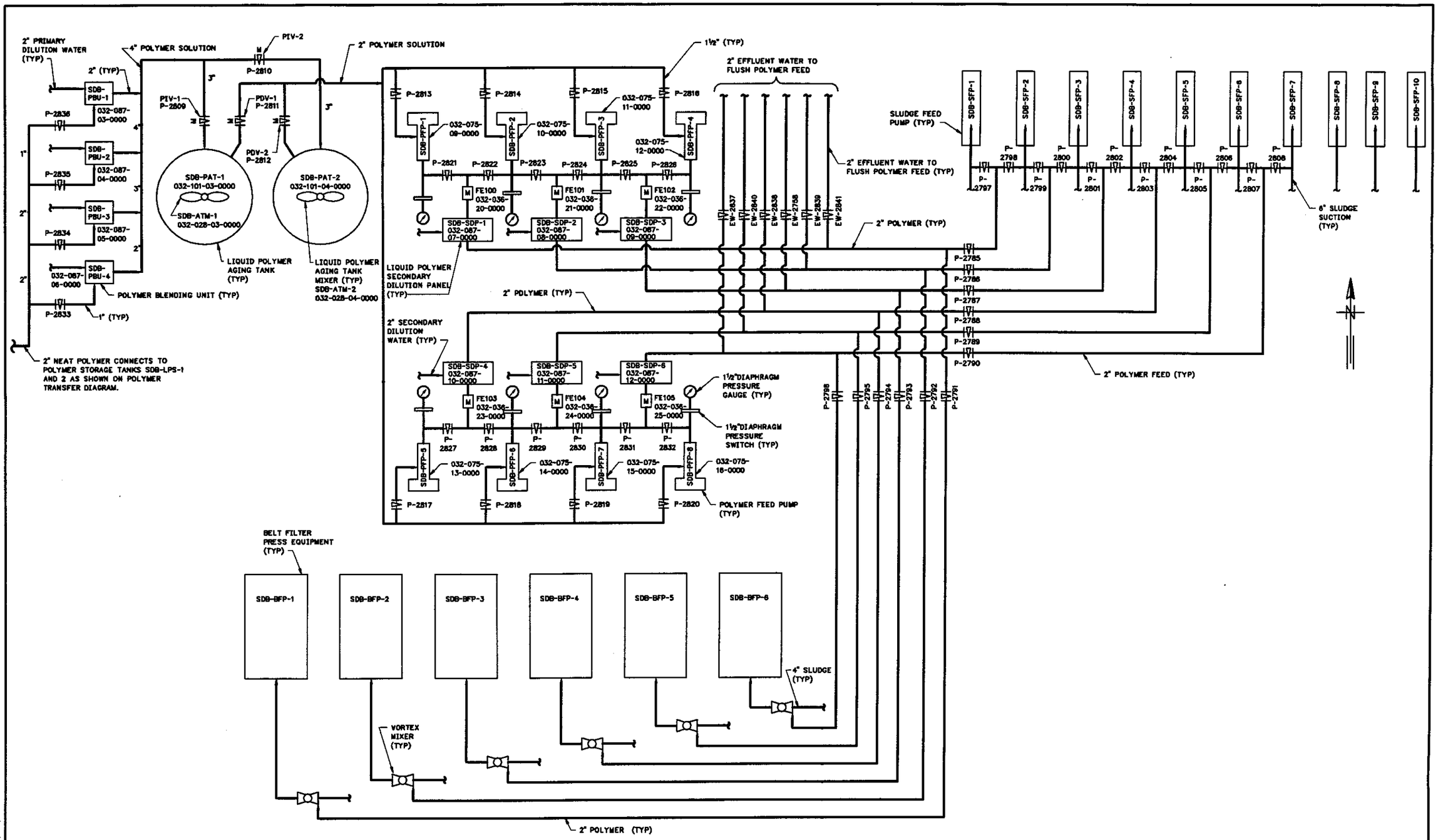

FIGURE III-SD-SDB-2 SLUDGE DEWATERING BUILDING WEST LIQUID POLYMER DIAGRAM

GREELEY AND HANSEN
ENGINEERS

FIGURE III-SD-SDB-2
SLUDGE DEWATERING BUILDING
WEST LIQUID POLYMER DIAGRAM

FILE: SD-SD-2 1:1 03/01/99 09:42 GH-E

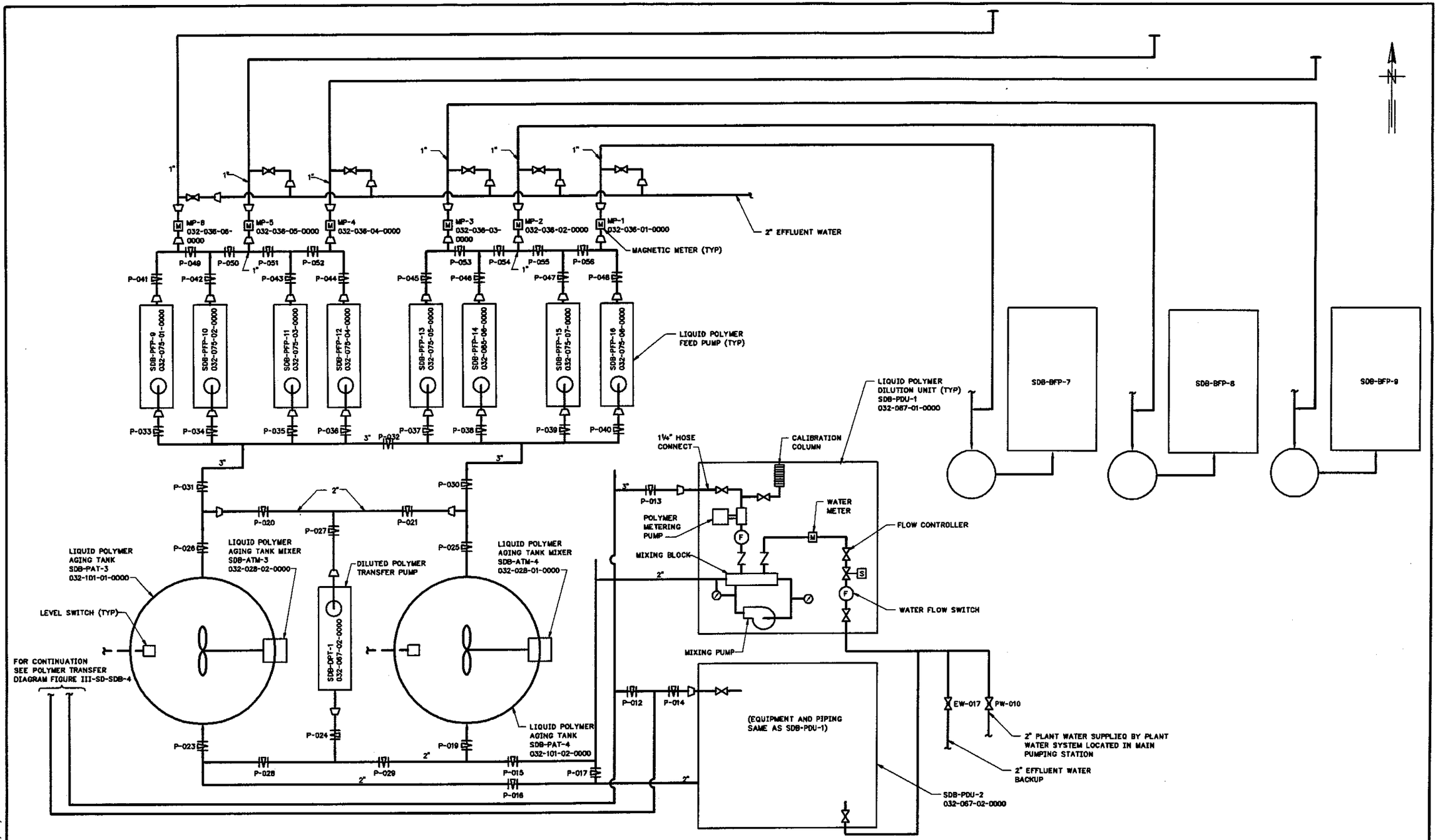

FIGURE III-SD-SDB-3 SLUDGE DEWATERING BUILDING EAST LIQUID POLYMER DIAGRAM

GREELEY AND HANSEN
ENGINEERS

FILE: SD-SD-3 1:1 03/01/99 09:59 GH-E

FIGURE III-SD-SDB-3
SLUDGE DEWATERING BUILDING
EAST LIQUID POLYMER DIAGRAM

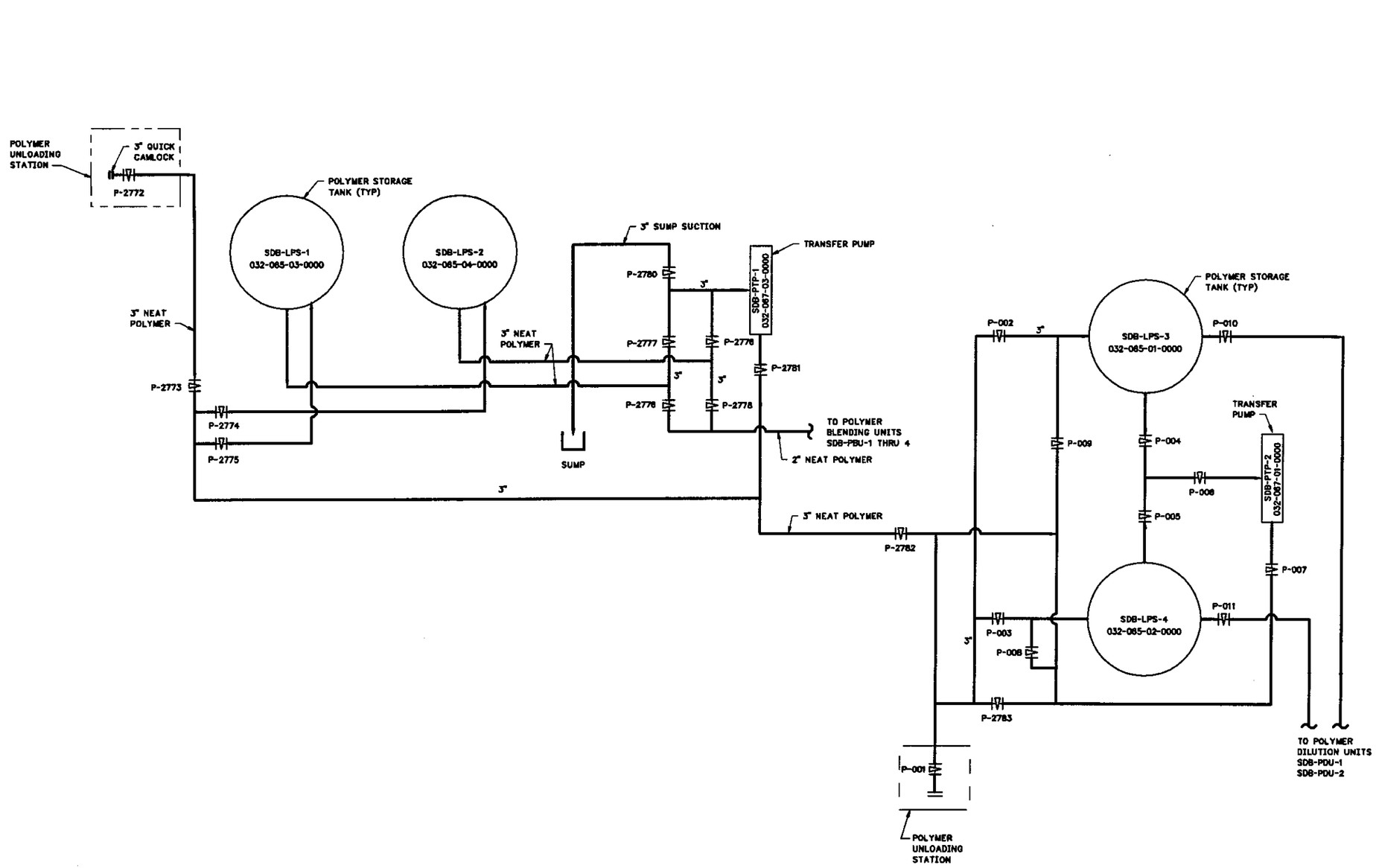

FIGURE III-SD-SDB-4 SLUDGE DEWATERING BUILDING POLYMER TRANSFER DIAGRAM

FILE: SD-SD-4 1:1 03/01/99 10:04 GH-E

GREELEY AND HANSEN
ENGINEERS

FIGURE III-SD-SDB-4
SLUDGE DEWATERING BUILDING
POLYMER TRANSFER DIAGRAM

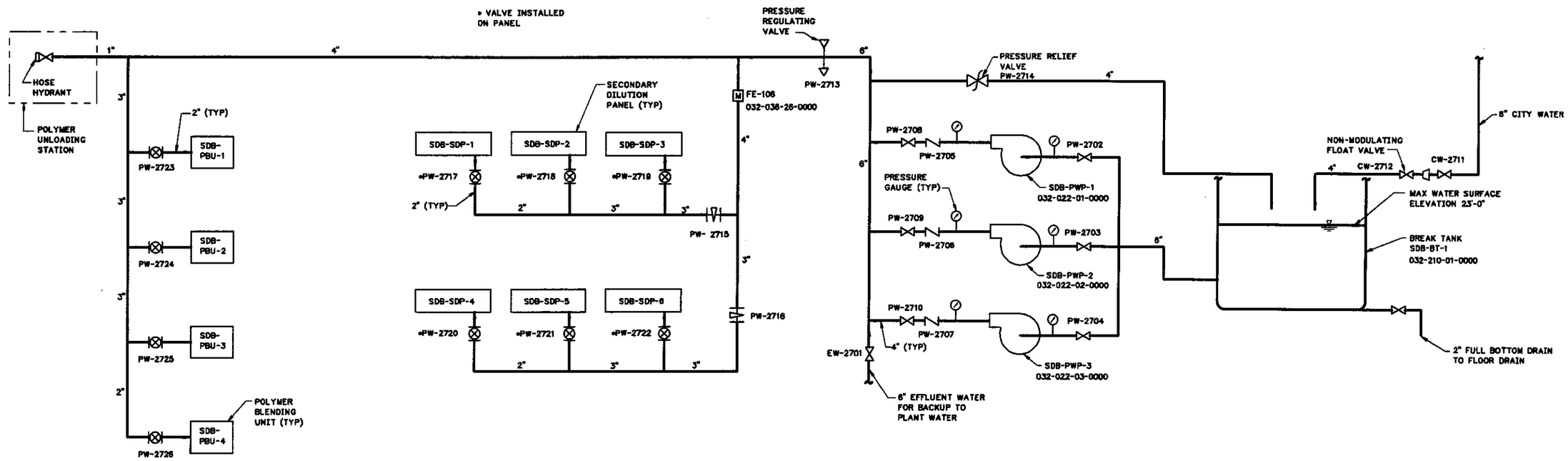

FIGURE III-SD-SDB-5 SLUDGE DEWATERING BUILDING-WEST PLANT WATER DIAGRAM

FILE: SD-SD-5 1:1 03/01/99 10:07 GH-E

GREELEY AND HANSEN
ENGINEERS

FIGURE III-SD-SDB-5
SLUDGE DEWATERING BUILDING-WEST
PLANT WATER DIAGRAM

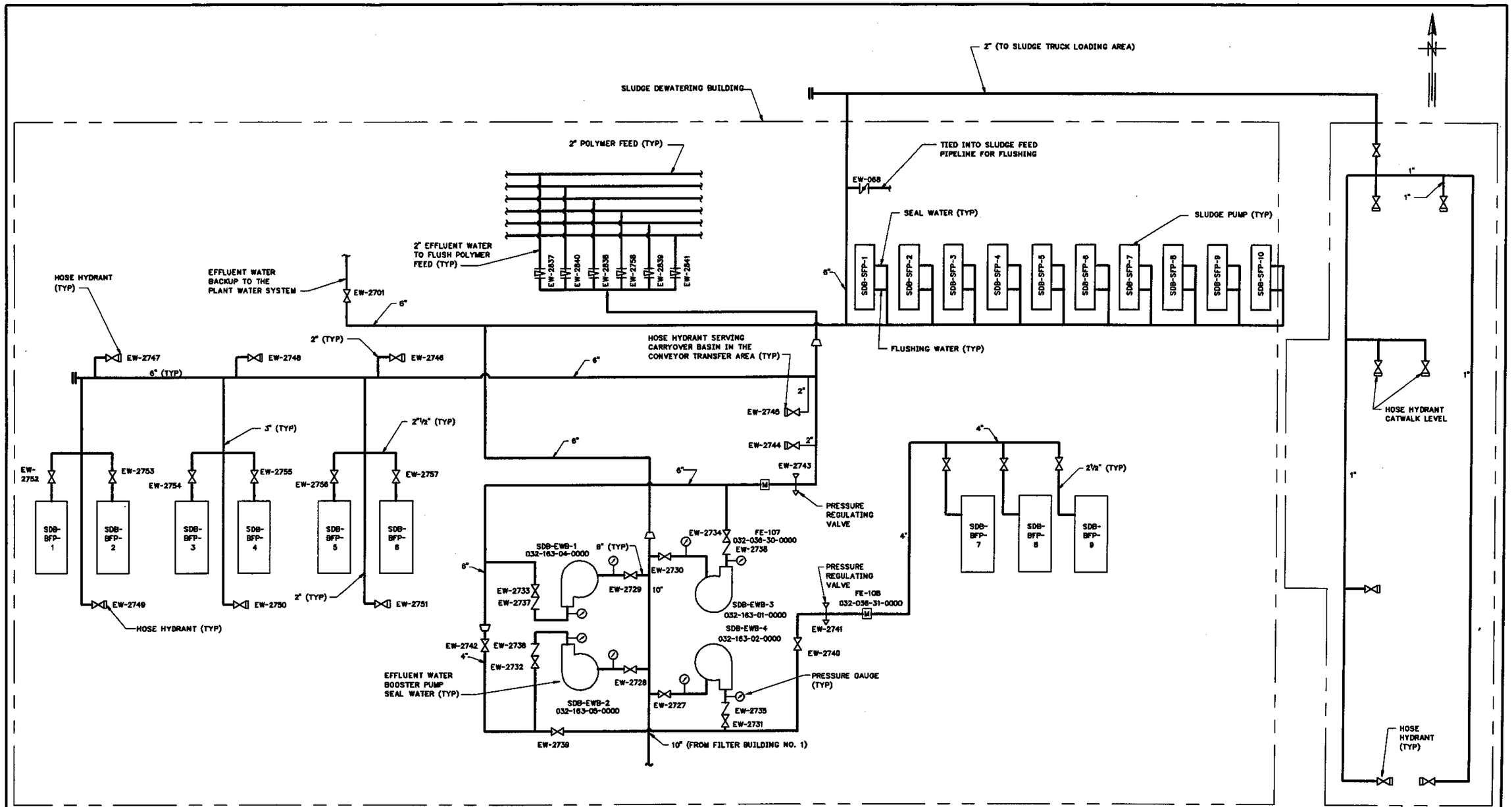

FIGURE III-SD-SDB-6 SLUDGE DEWATERING BUILDING EFFLUENT WATER DIAGRAM

FILE: SD-SD-6 1:1 03/01/99 10:16 GH-E

GREELEY AND HANSEN
ENGINEERS

FIGURE III-SD-SDB-6
SLUDGE DEWATERING BUILDING
EFFLUENT WATER DIAGRAM

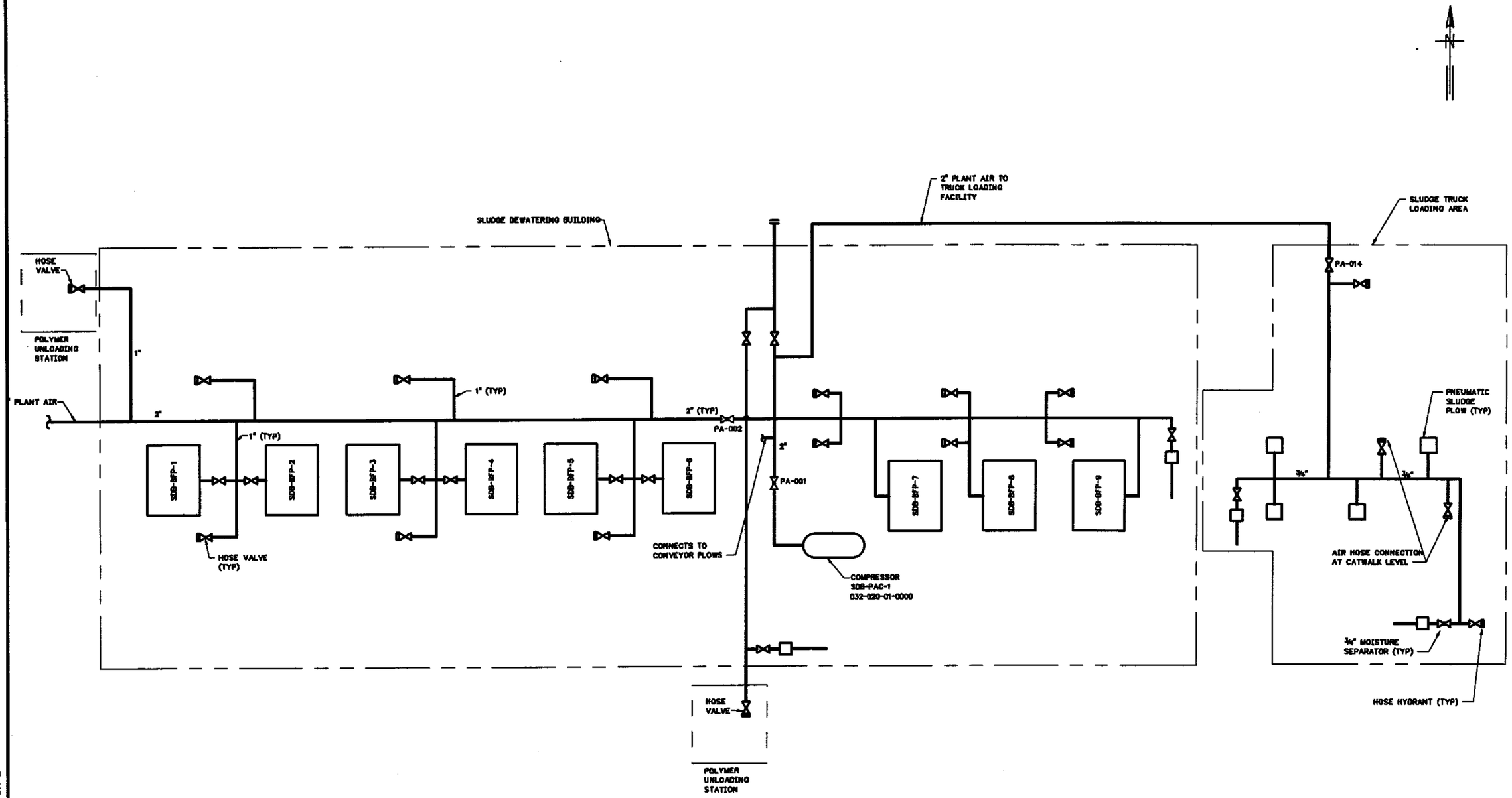

FIGURE III-SD-SDB-7 SLUDGE DEWATERING BUILDING PLANT AIR DIAGRAM

FILE: SD-SD-7 1:1 03/01/99 10:42 GH-E

GREELEY AND HANSEN ENGINEERS

FIGURE III-SD-SDB-7
SLUDGE DEWATERING BUILDING
PLANT AIR DIAGRAM

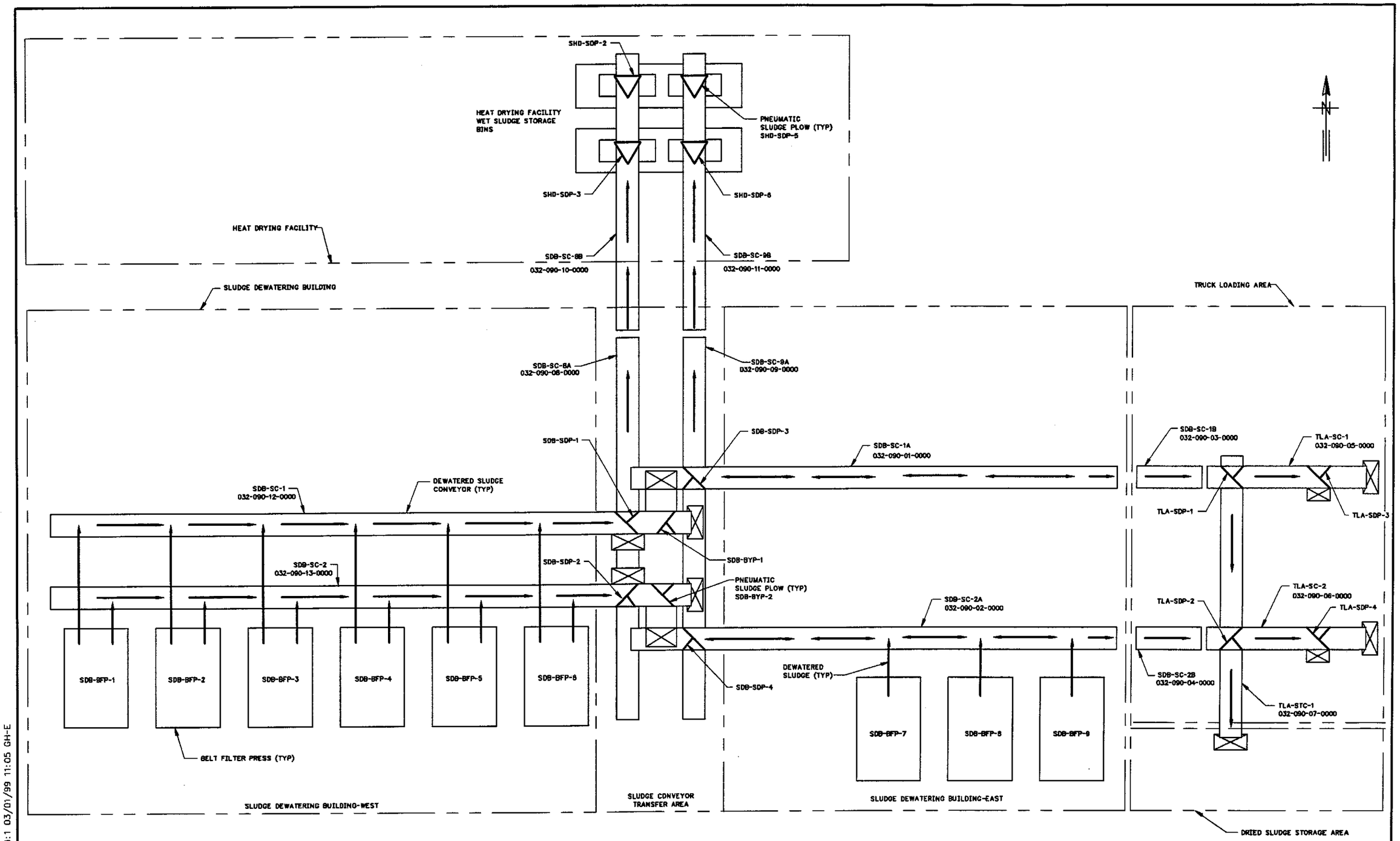

FIGURE III-SD-SDB-8 SLUDGE DEWATERING BUILDING CONVEYOR DIAGRAM

GREELEY AND HANSEN
ENGINEERS

FIGURE III-SD-SDB-8
SLUDGE DEWATERING BUILDING
CONVEYOR DIAGRAM

FILE: SD-SD-8 1:1 03/01/99 11:05 GH-E

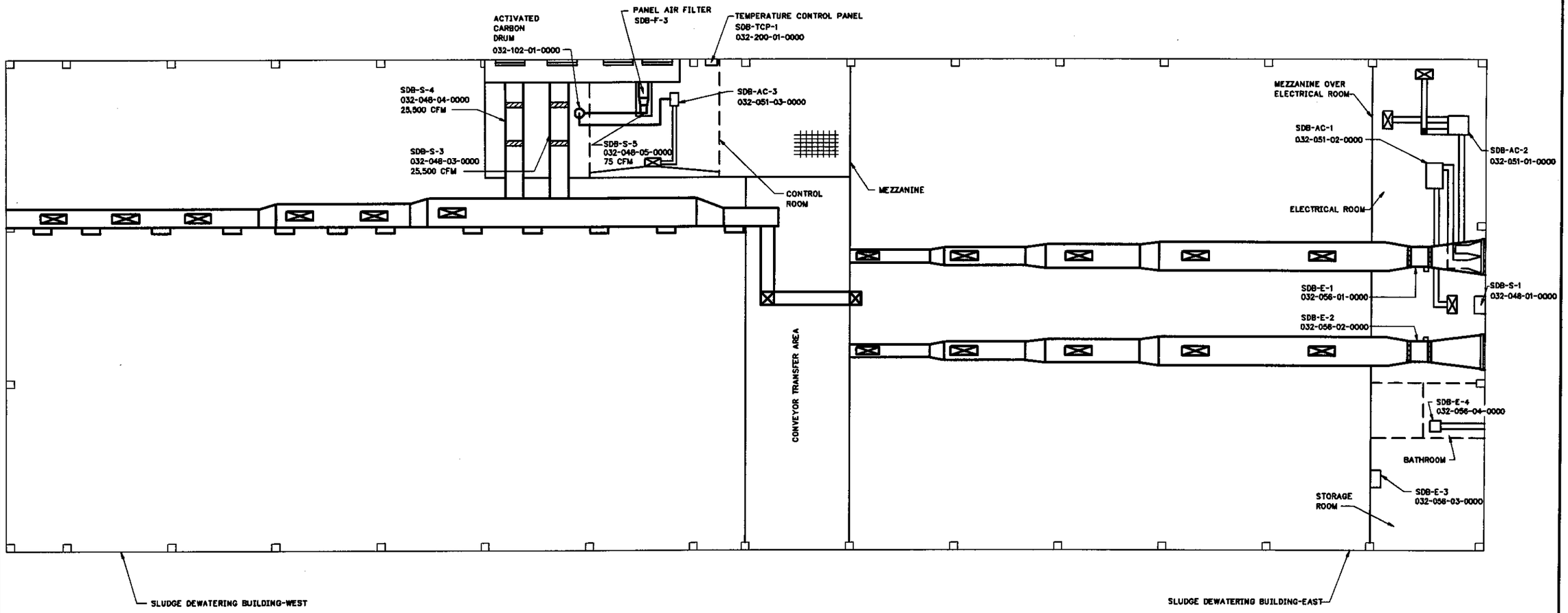

FIGURE III-SD-SDB-9 SLUDGE DEWATERING BUILDING VENTILATION DIAGRAM

FILE: SD-SD-9 1:1 03/01/99 11:12 GH-E

GREELEY AND HANSEN
ENGINEERS

FIGURE III-SD-SDB-9
SLUDGE DEWATERING BUILDING
VENTILATION DIAGRAM

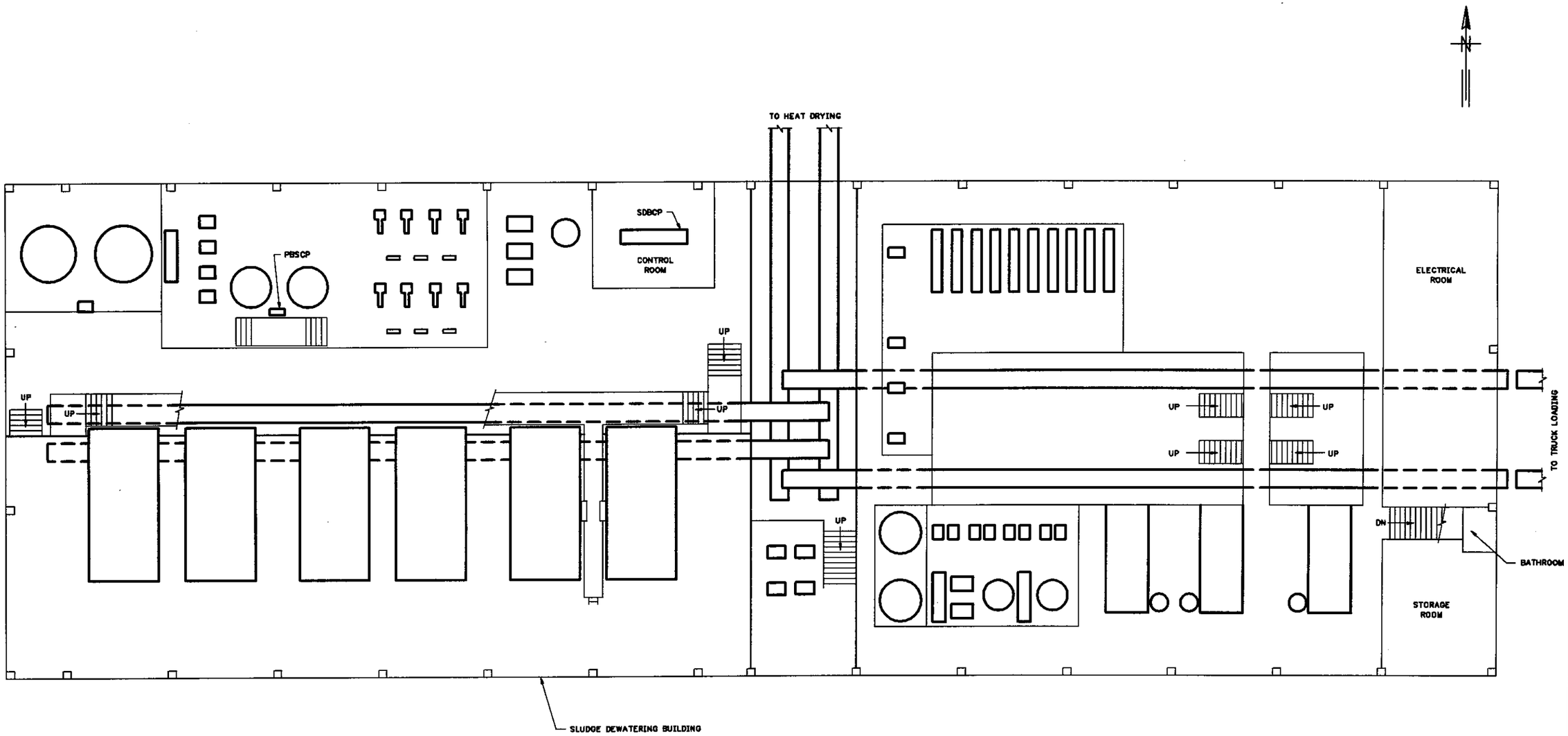

FIGURE III-SD-SDB-10 SLUDGE DEWATERING BUILDING VENTILATION DIAGRAM

FILE: SD-SD-10 1:1 03/01/99 11:16 GH-E

GREELEY AND HANSEN
ENGINEERS

FIGURE III-SD-SDB-10
SLUDGE DEWATERING BUILDING
VENTILATION DIAGRAM

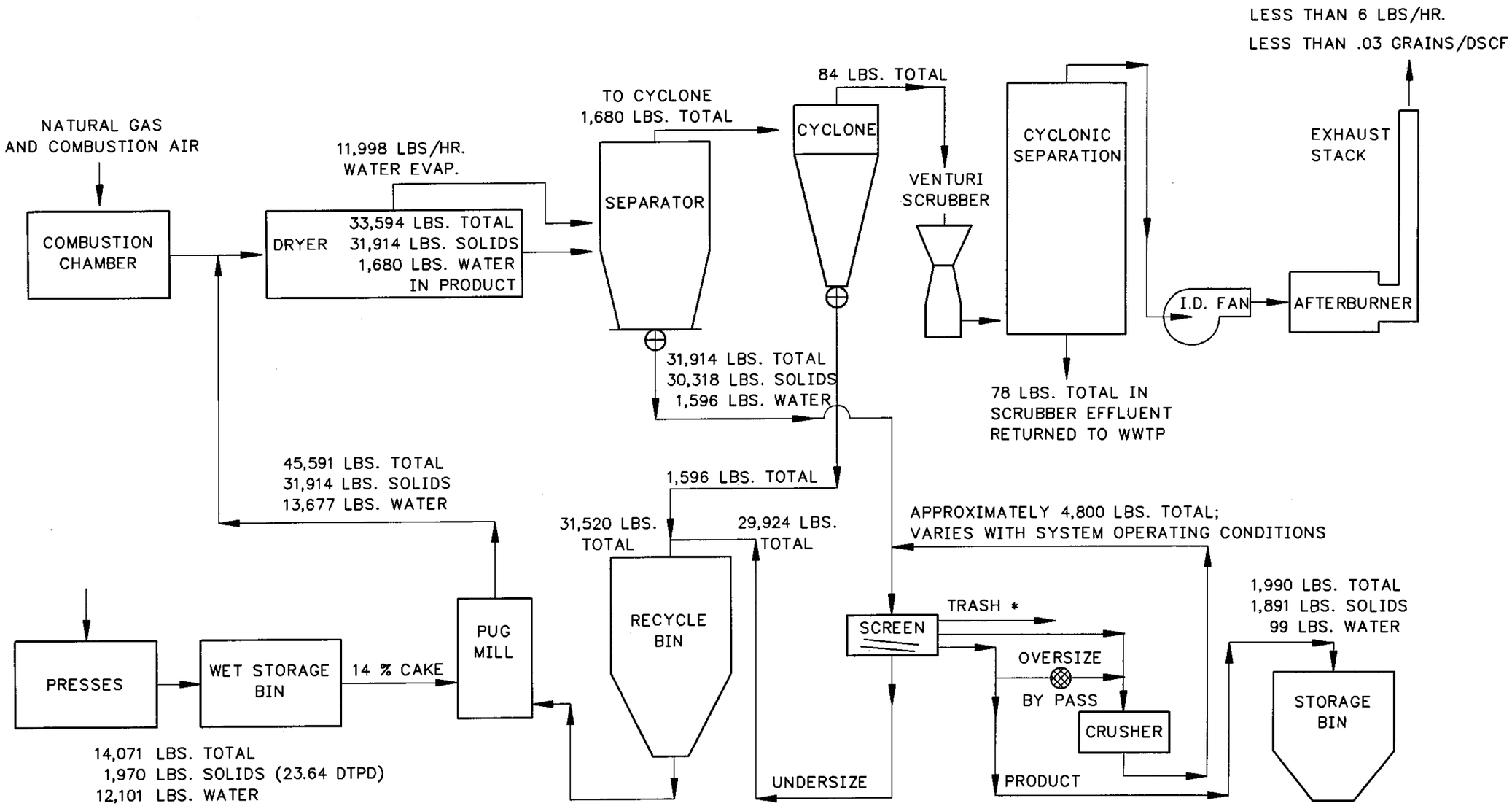

* TRACE QUANTITY TO CLOSED TRASH CONTAINER NOT INCLUDED IN MATERIAL BALANCE; TRASH SCREEN IS A SAFETY DEVICE TO CATCH LOOSE BOLTS, ETC. RATHER THAN A PART OF SLUDGE PELLETIZING SYSTEM

NOTE:
1. BASED ON O&M FIGURE PRODUCED BY CDM.

FIGURE III-SD-HDF-1 SLUDGE PELLETIZING PROCESS SYSTEM FLOW/MATERIAL BALANCE 14% SOLIDS FEED SLUDGE

GREELEY AND HANSEN
ENGINEERS

FIGURE III-SD-HDF-1
SLUDGE PELLETIZING PROCESS
SYSTEM FLOW/MATERIAL BALANCE
14% SOLIDS FEED SLUDGE

FILE: SD-HDF-1 1:1 03/01/99 11:52 GH-E

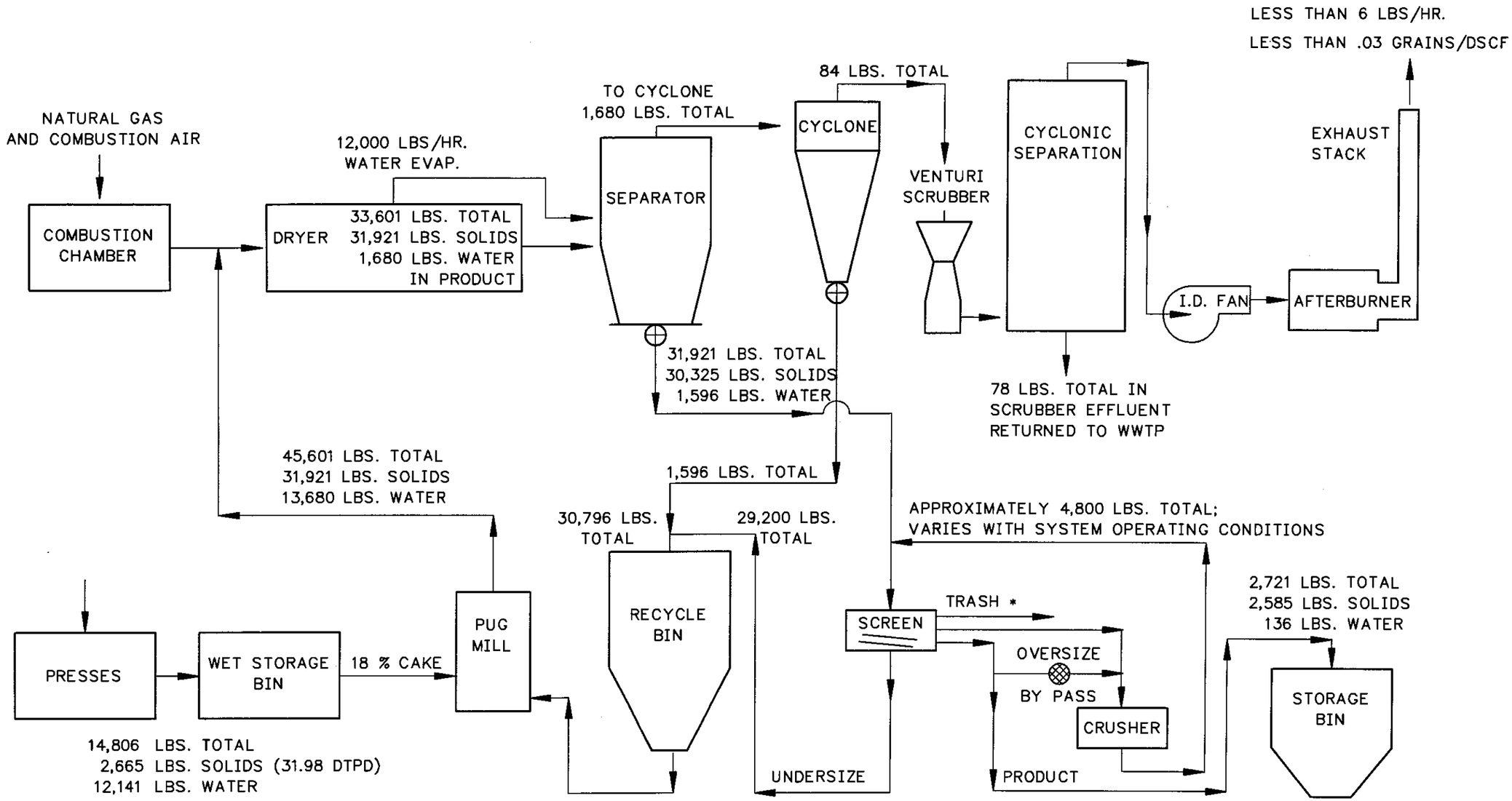

* TRACE QUANTITY TO CLOSED TRASH CONTAINER NOT INCLUDED IN MATERIAL BALANCE; TRASH SCREEN IS A SAFETY DEVICE TO CATCH LOOSE BOLTS, ETC. RATHER THAN A PART OF SLUDGE PELLETIZING SYSTEM

NOTE:
1. BASED ON O&M FIGURE PRODUCED BY CDM.

FIGURE III-SD-HDF-2 SLUDGE PELLETIZING PROCESS
SYSTEM FLOW/MATERIAL BALANCE
18% SOLIDS FEED SLUDGE

GREELEY AND HANSEN
ENGINEERS

FIGURE III-SD-HDF-2
SLUDGE PELLETIZING PROCESS
SYSTEM FLOW/MATERIAL BALANCE
18% SOLIDS FEED SLUDGE

FILE: SD-HDF-2 1:1 03/01/99 13:12 GH-E

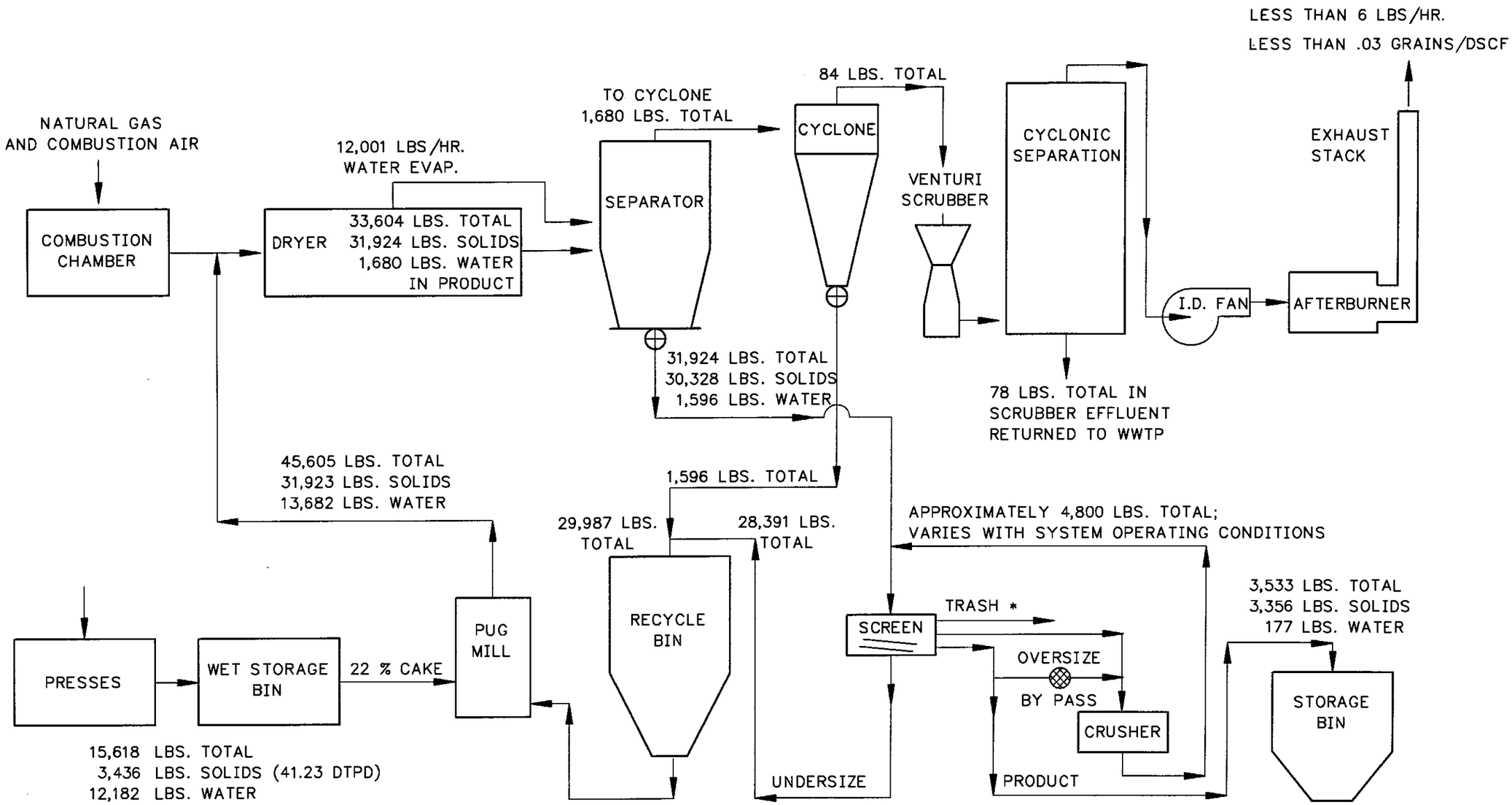

* TRACE QUANTITY TO CLOSED TRASH CONTAINER NOT INCLUDED IN MATERIAL BALANCE; TRASH SCREEN IS A SAFETY DEVICE TO CATCH LOOSE BOLTS, ETC. RATHER THAN A PART OF SLUDGE PELLETIZING SYSTEM

NOTE:
1. BASED ON O&M FIGURE PRODUCED BY CDM.

FIGURE III-SD-HDF-3 SLUDGE PELLETIZING PROCESS SYSTEM FLOW/MATERIAL BALANCE 22% SOLIDS FEED SLUDGE

GREELEY AND HANSEN
ENGINEERS

FIGURE III-SD-HDF-3
SLUDGE PELLETIZING PROCESS
SYSTEM FLOW/MATERIAL BALANCE
22% SOLIDS FEED SLUDGE

FILE: SD-HDF-3 1:1 03/01/99 13:15 GH-E

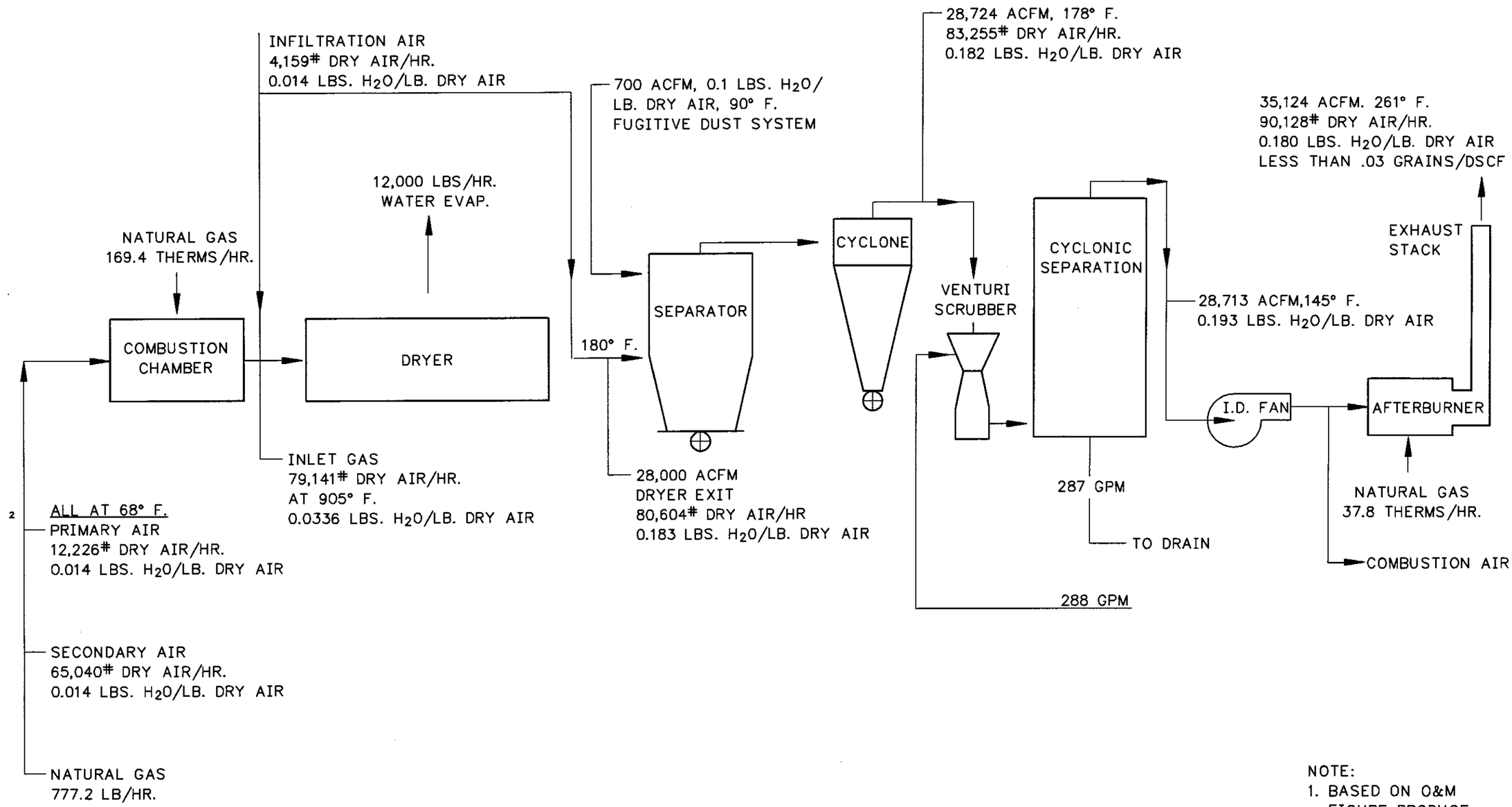

NOTE:
1. BASED ON O&M FIGURE PRODUCE BY CDM.

FIGURE III-SD-HDF-4 SLUDGE PELLETIZING PROCESS
SYSTEM FLOW AIR/FUEL PROCESS

FILE: SD-HDF-4 1:1 03/01/99 13:18 GH-E

GREELEY AND HANSEN
ENGINEERS

FIGURE III-SD-HDF-4
SLUDGE PELLETIZING PROCESS
SYSTEM FLOW AIR/FUEL PROCESS

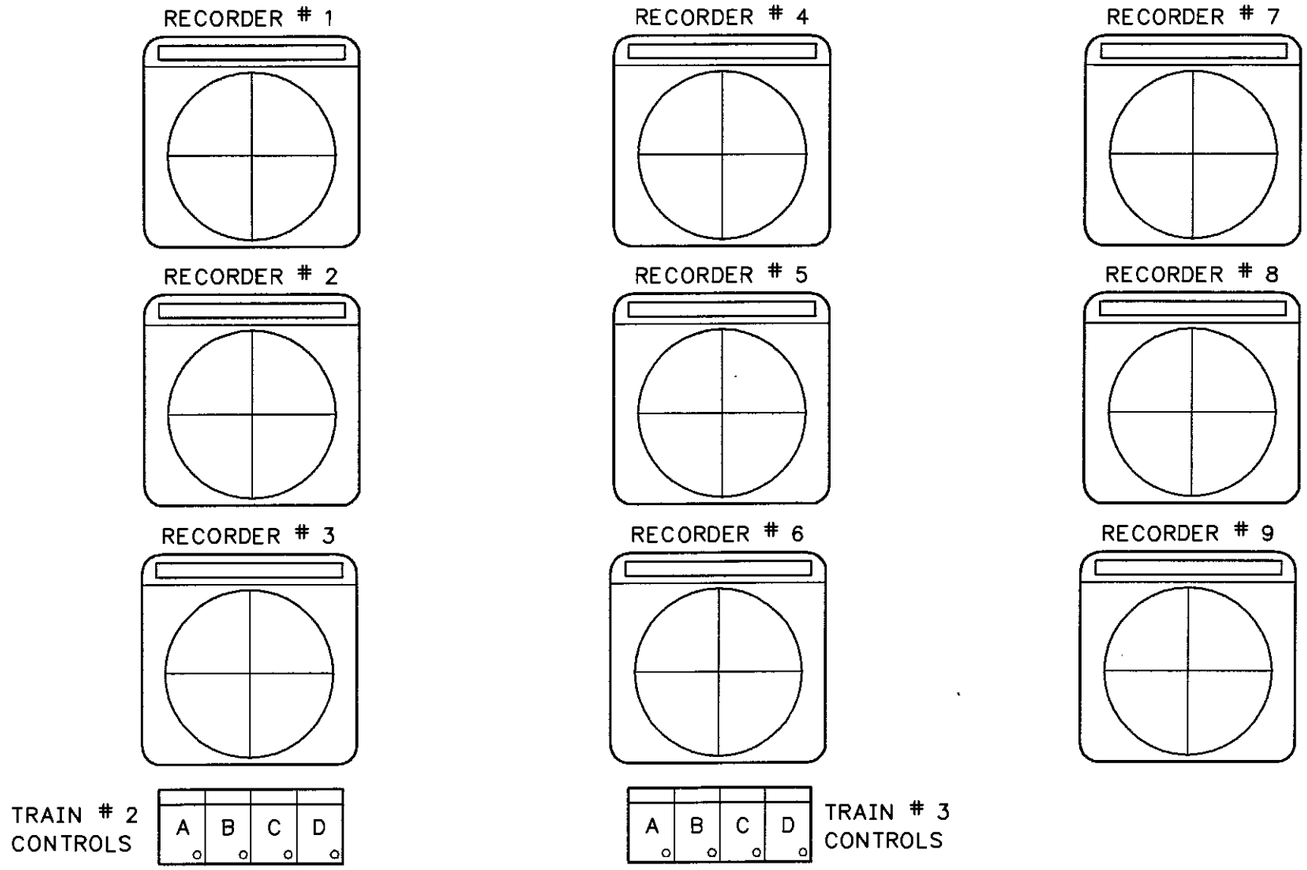

CHART RECORDER LEGEND

(PEN #) RECORDER # 1
1 - #2 DRYER GAS FLOW
2 - #2 DRYER OXYGEN LEVEL
3 - #2 I.D. FAN DIFF. PRESS.
4 - UNUSED

(PEN #) RECORDER # 2
1 - #2 DRYER INLET TEMP.
2 - #2 DRYER OUTLET TEMP.
3 - AB #2 INLET TEMP.
4 - AB #2 OUTLET TEMP.

(PEN #) RECORDER # 3
1 - UNUSED
2 - AB #2 AVERAGE TEMP.
3 - AB #2 GAS FLOW SCFH
4 - AB #2 INLET P.S.I.

(PEN #) RECORDER # 4
1 - #3 DRYER GAS FLOW
2 - #3 DRYER OXYGEN LEVEL
3 - #3 I.D. FAN DIFF
4 - UNUSED

(PEN #) RECORDER # 5
1 - #3 DRYER INLET TEMP.
2 - #3 DRYER OUTLET TEMP.
2 - AB #3 INLET TEMP.
4 - AB #3 OUTLET TEMP.

(PEN #) RECORDER # 6
1 - UNUSED
2 - AB #2 AVERAGE TEMP.
3 - AB #2 GAS FLOW SCFH
4 - AB #2 INLET P.S.I.

(PEN #) RECORDER # 7
1 - CONVEYOR 8B SLUDGE RATE
2 - CONVEYOR 9B SLUDGE RATE
3 - UNUSED
4 - UNUSED

(PEN #) RECORDER # 8
1 - #2 RECYCLE FLOW TO PUG MILL
2 - #3 RECYCLE FLOW TO PUG MILL
3 - UNUSED
4 - UNUSED

(PEN #) RECORDER # 9
1 - #2 PRODUCT FLOW
2 - #3 PRODUCT FLOW
3 - UNUSED
4 - UNUSED

NOTE:
1. BASED ON O&M FIGURE PRODUCE BY CDM.

FILE: SD-HDF-5 1:1 03/01/99 13:20 GH-E

GREELEY AND HANSEN ENGINEERS

FIGURE III-SD-HDF-5 CHART RECORDERS

FIGURE III-SD-HDF-5
CHART RECORDERS

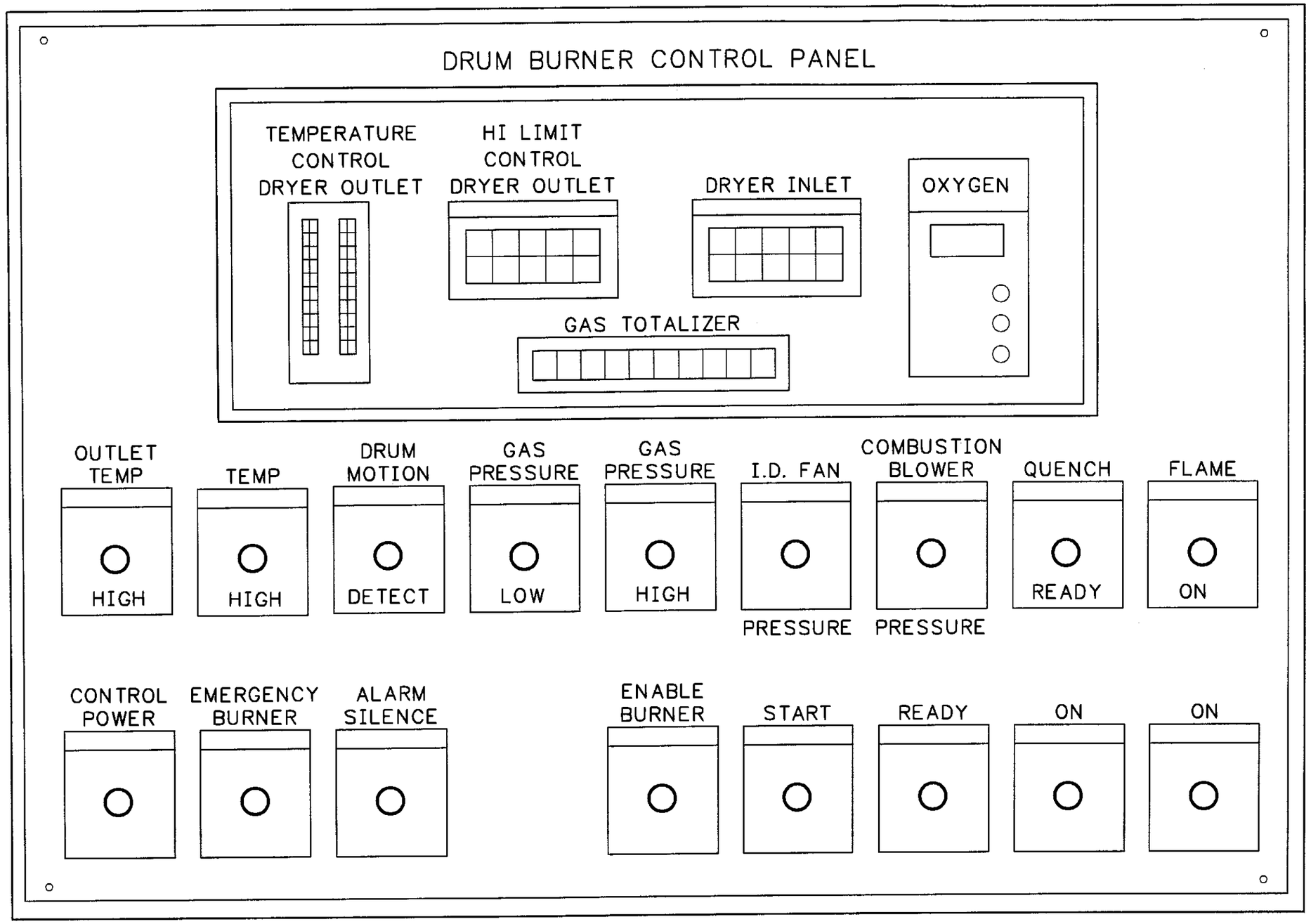

NOTE:
1. BASED ON O&M FIGURE PRODUCED BY CDM.

FIGURE III-SD-HDF-6 DRUM BURNER CONTROL PANEL

GREELEY AND HANSEN ENGINEERS

FILE: SD-HDF-6 1:1 03/01/99 13:23 GH-E

FIGURE III-SD-HDF-6
DRUM BURNER
CONTROL PANEL

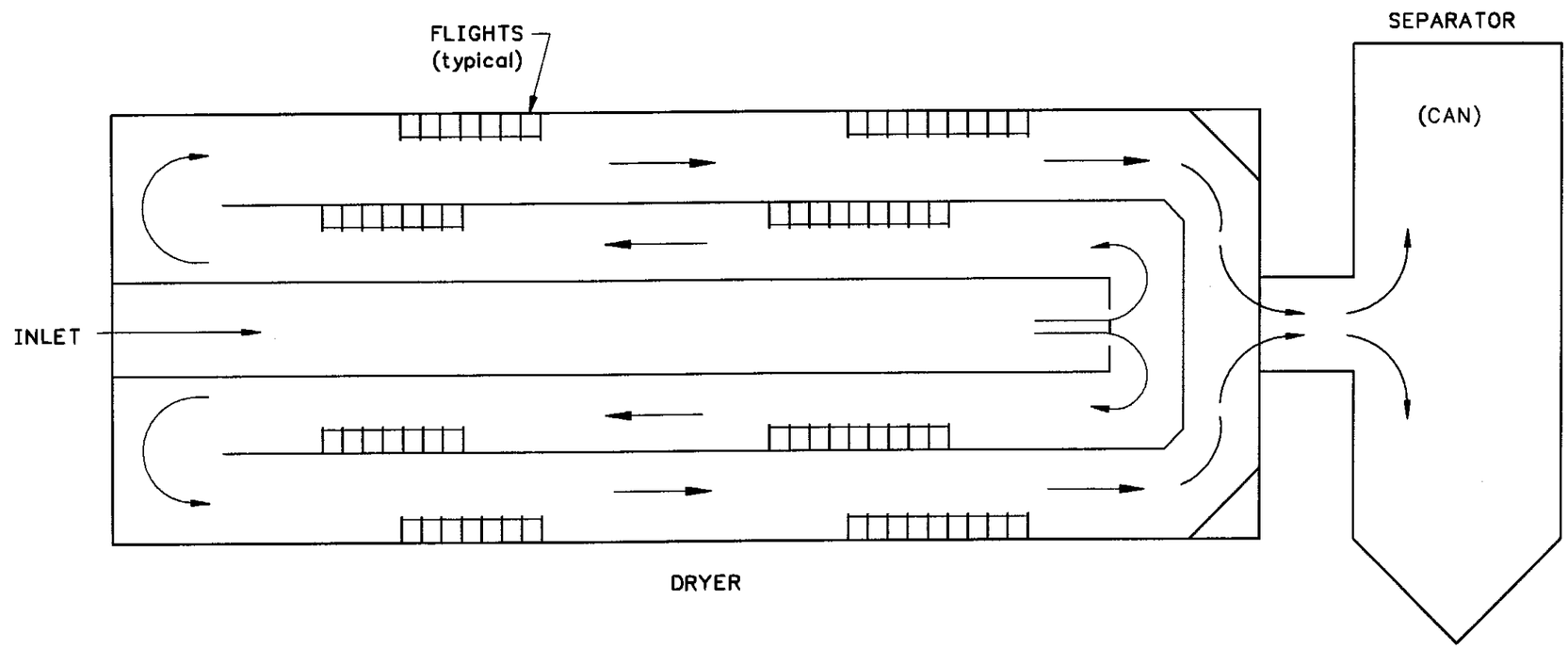

NOTE:
1. BASED ON O&M FIGURE PRODUCED BY CDM.

FIGURE III-SD-HDF-7 SECTIONAL VIEW OF ROTARY DRYER

GREELEY AND HANSEN ENGINEERS

FIGURE III-SD-HDF-7
SECTIONAL VIEW
OF ROTARY DRYER

FILE: SD-HDF-7 1:1 03/01/99 13:27 GH-E

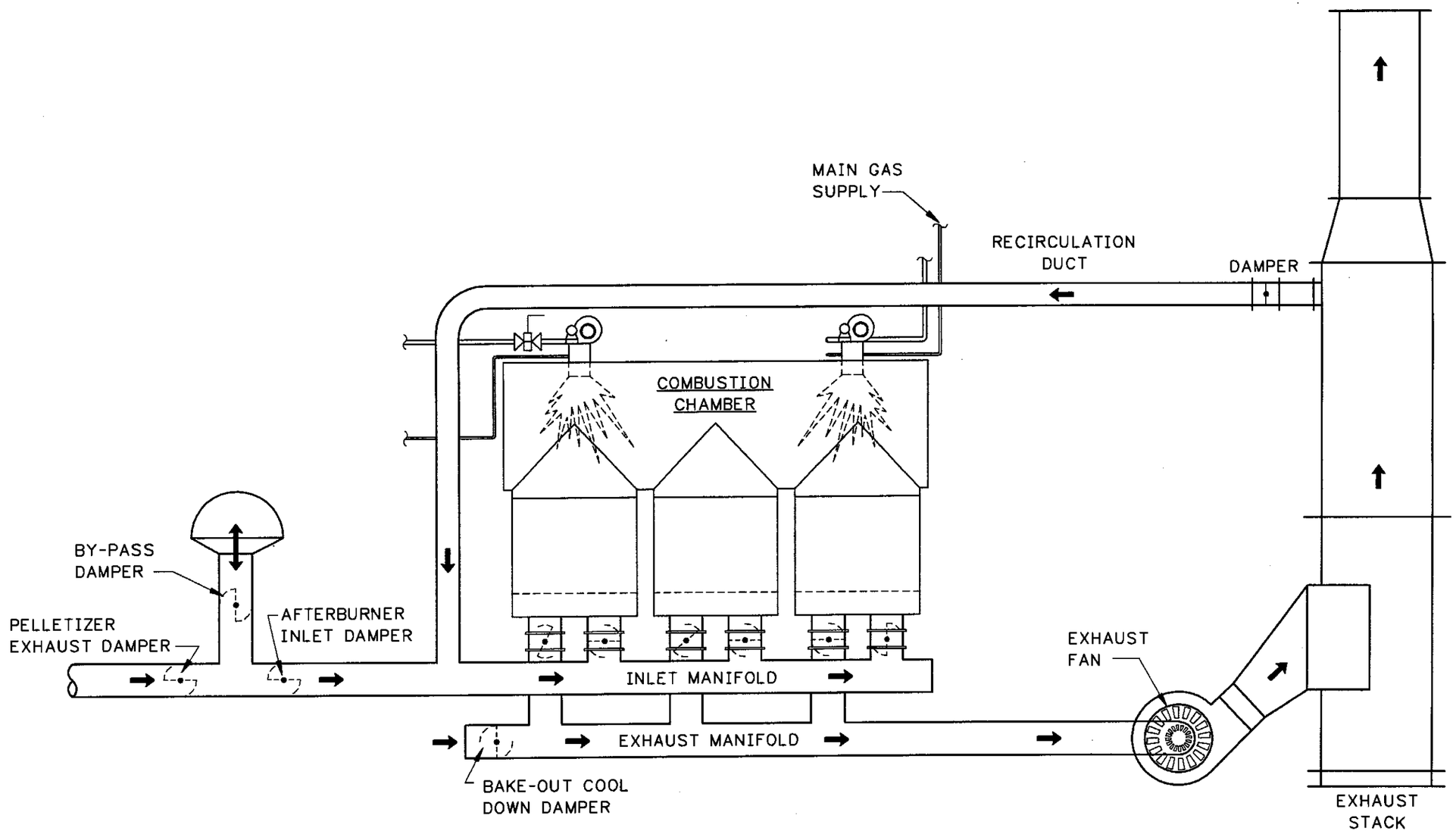

FIGURE III- SD-HDF-8 AIR POLLUTION CONTROL PROCESS AFTERBURNER

NOTE:
1. BASED ON O&M FIGURE PRODUCED BY CDM.

FIGURE III-SD-HDF-8
AIR POLLUTION CONTROL
PROCESS AFTERBUNER

GREELEY AND HANSEN
ENGINEERS

FILE: SD-HDF-8 1:1 03/01/99 13:47 GH-E

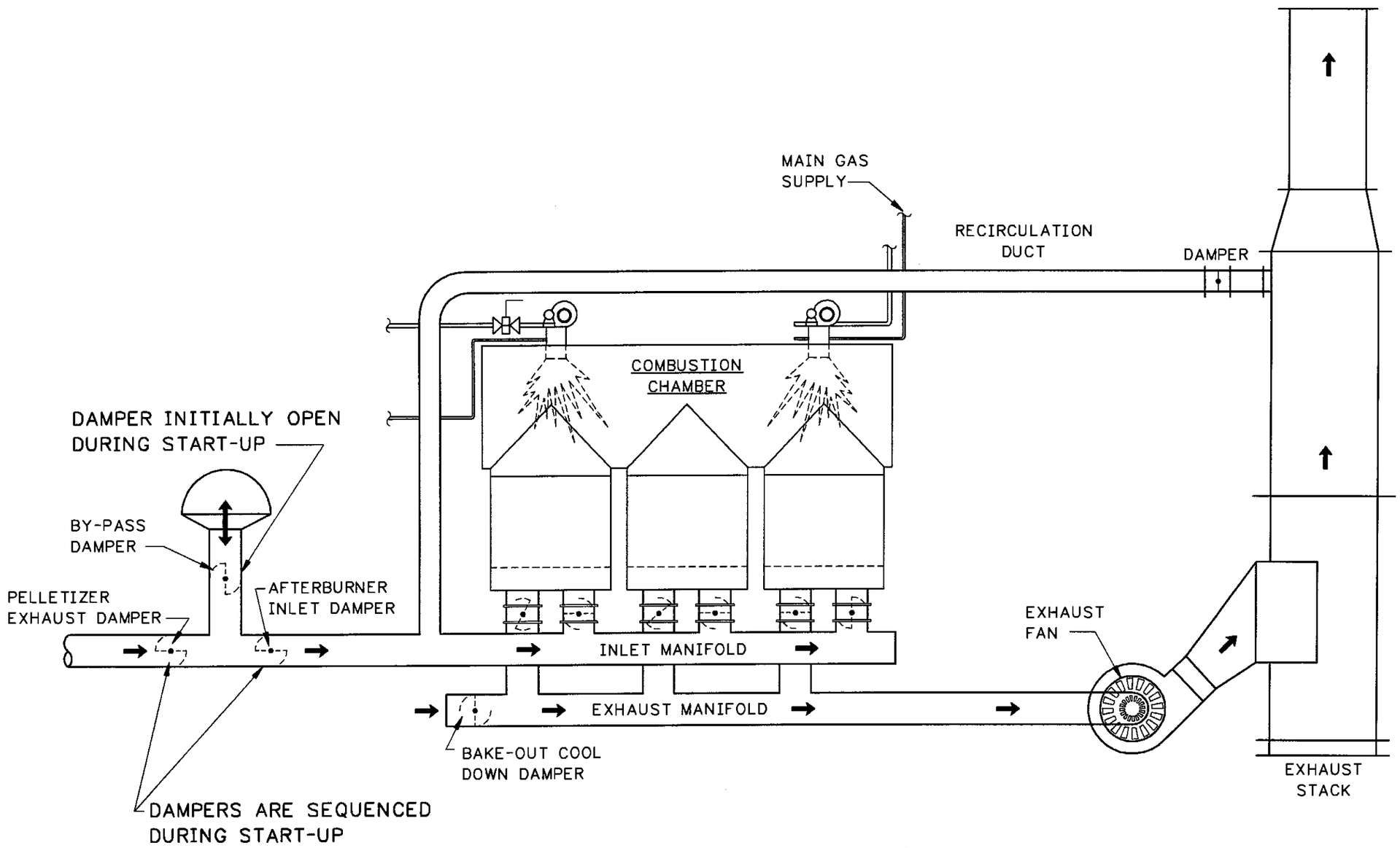

OPERATING MODE : START UP

NOTE:
1. BASED ON O&M FIGURE PRODUCED BY CDM.

FIGURE III-SD-HDF-9 SLUDGE PELLETIZING PROCESS AFTERBURNER

FILE: SD-HDF-9 1:1 03/01/99 13:49 GH-E

GREELEY AND HANSEN ENGINEERS

FIGURE III-SD-HDF-9
SLUDGE PELLETIZING
PROCESS AFTERBURNER

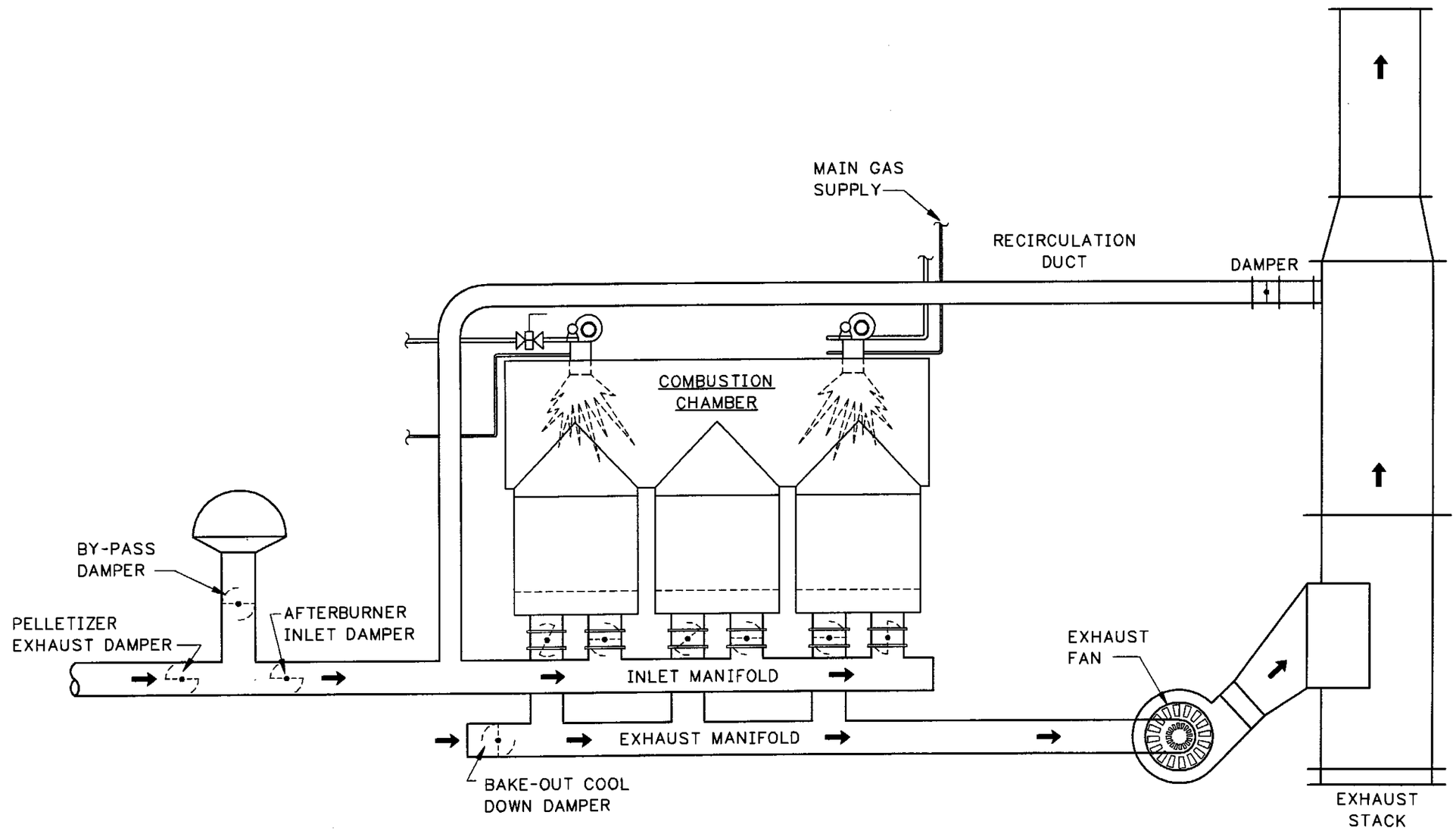

OPERATING MODE : NORMAL OPERATING MODE.

NOTE:
1. BASED ON O&M FIGURE PRODUCED BY CDM.

FIGURE III-SD-HDF-10 SLUDGE PELLETIZING PROCESS AFTERBURNER

GREELEY AND HANSEN
ENGINEERS

FIGURE III-SD-HDF-10
SLUDGE PELLETIZING
PROCESS AFTERBURNER

FILE: SD-HDF10 1:1 03/01/99 13:51 GH-E

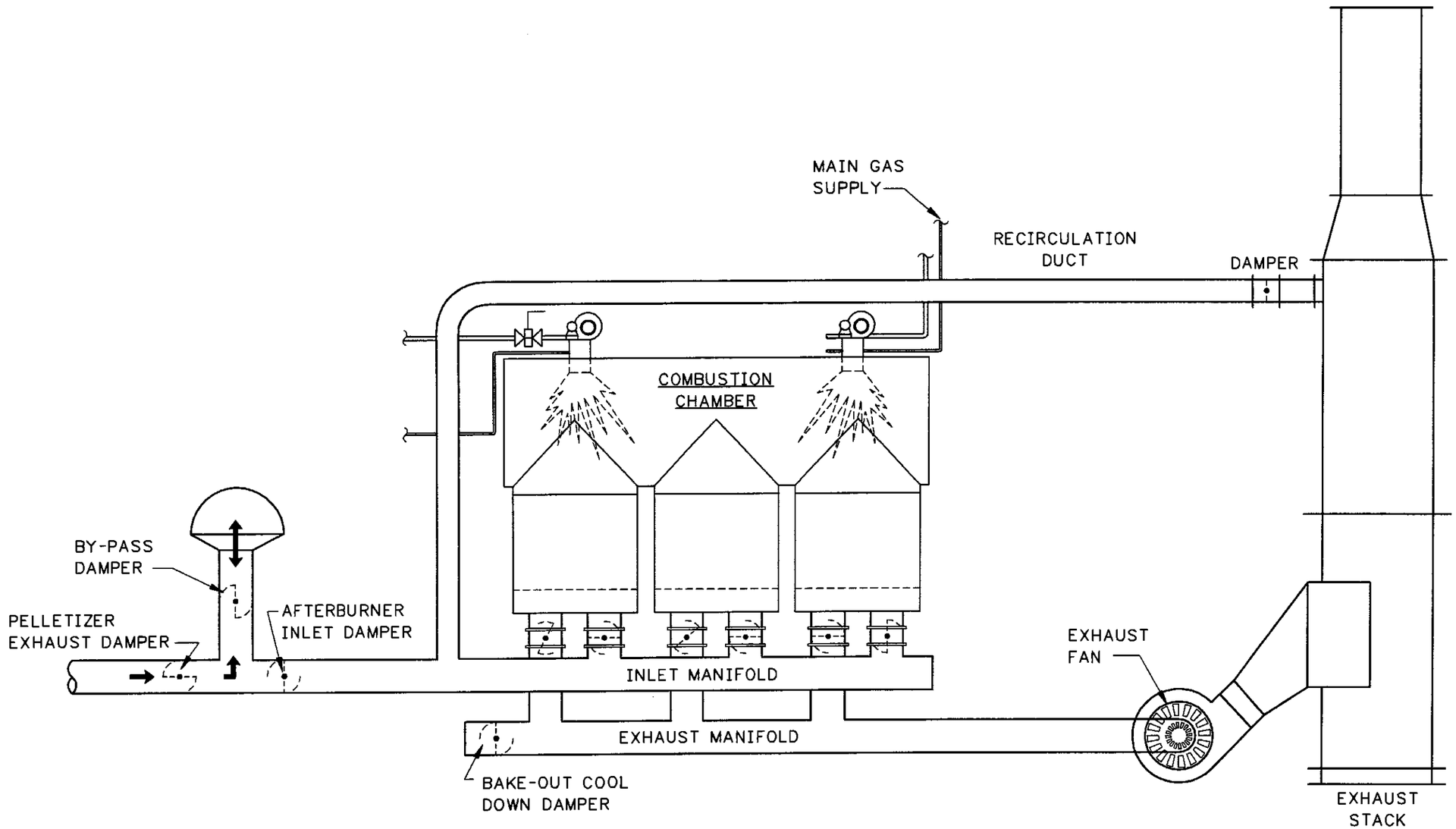

OPERATING MODE : SLUDGE PELLETIZER IN OPERATION WITH AFTERBURNER OFF.

NOTE:
1. BASED ON O&M FIGURE PRODUCED BY CDM.

FIGURE III-SD-HDF-11 SLUDGE PELLETIZING PROCESS AFTERBURNER

GREELEY AND HANSEN
ENGINEERS

FIGURE III-SD-HDF-11
SLUDGE PELLETIZING
PROCESS AFTERBURNER

FILE: SD-HDF11 1:1 03/01/99 14:17 GH-E

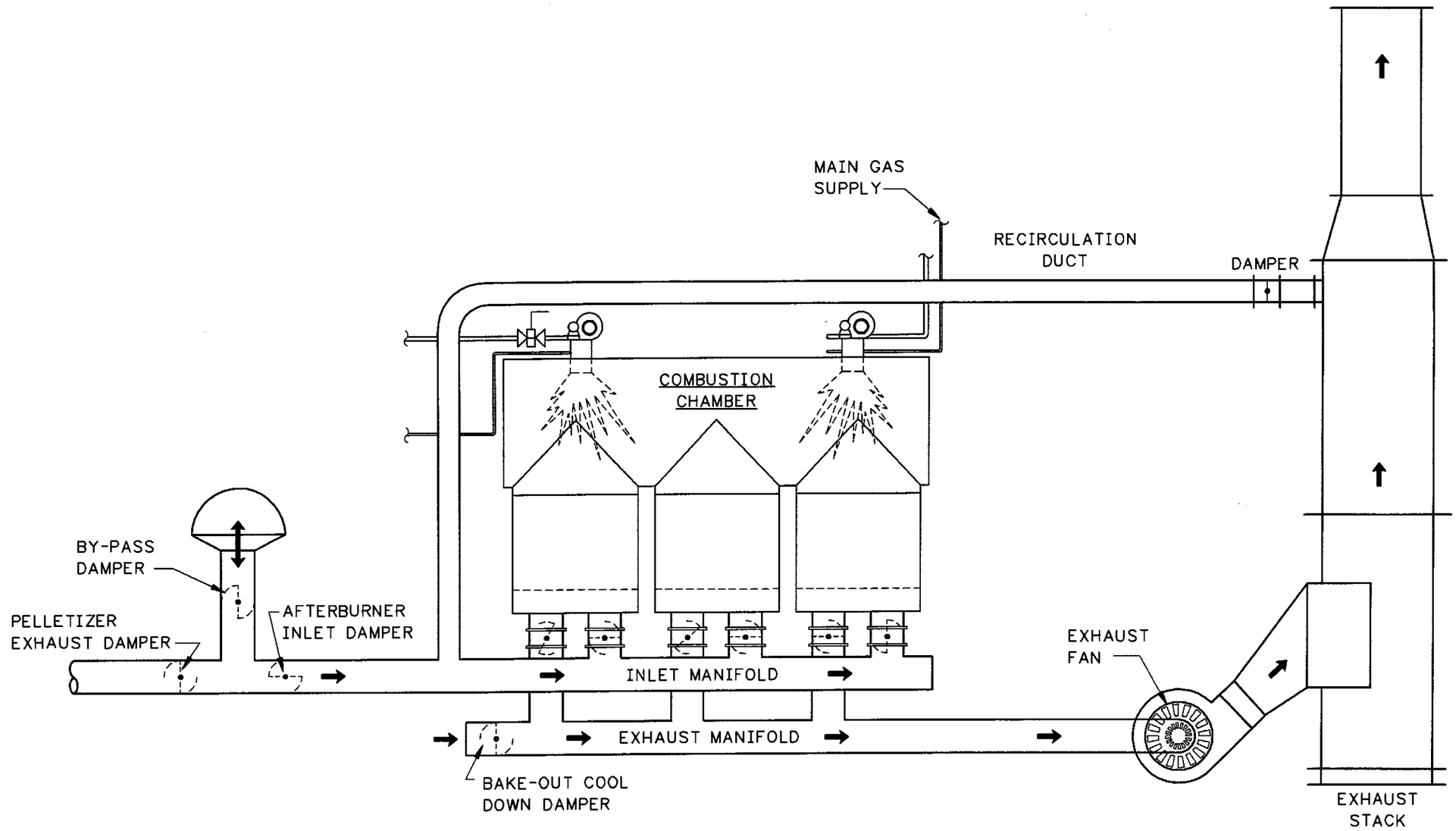

OPERATING MODE : AFTERBURNER IN OPERATION WITH SLUDGE PELLETIZER OFF

NOTE:
1. BASED ON O&M FIGURE PRODUCED BY CDM.

FIGURE III-SD-HDF-12 SLUDGE PELLETIZING PROCESS AFTERBURNER

GREELEY AND HANSEN
ENGINEERS

FIGURE III-SD-HDF-12
SLUDGE PELLETIZING
PROCESS AFTERBURNER

FILE: SD-HDF12 1:1 03/01/99 14:22 GH-E

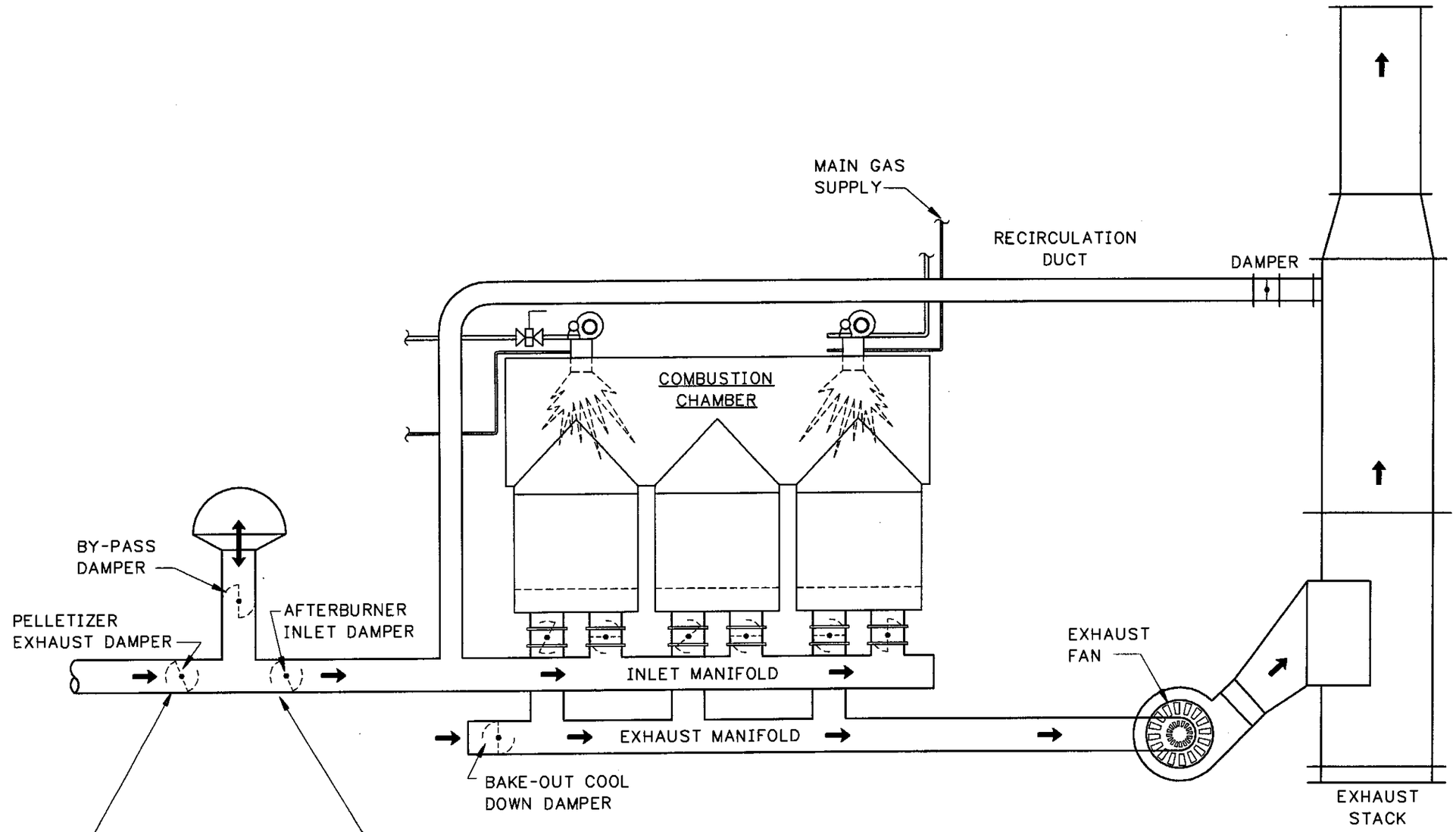

NOTE:
1. BASED ON O&M FIGURE PRODUCE BY CDM.

OPERATING MODE: EMERGENCY SHUTDOWN OF EITHER THE PELLETIZER OR THE AFTERBURNER PROCESS

FIGURE III-SD-HDF-13 SLUDGE PELLETIZING PROCESS AFTERBURNER

GREELEY AND HANSEN ENGINEERS

FIGURE III-SD-HDF-13
SLUDGE PELLETIZING
PROCESS AFTERBURNER

FILE: SD-HDF13 1:1 03/01/99 14:28 GH-E

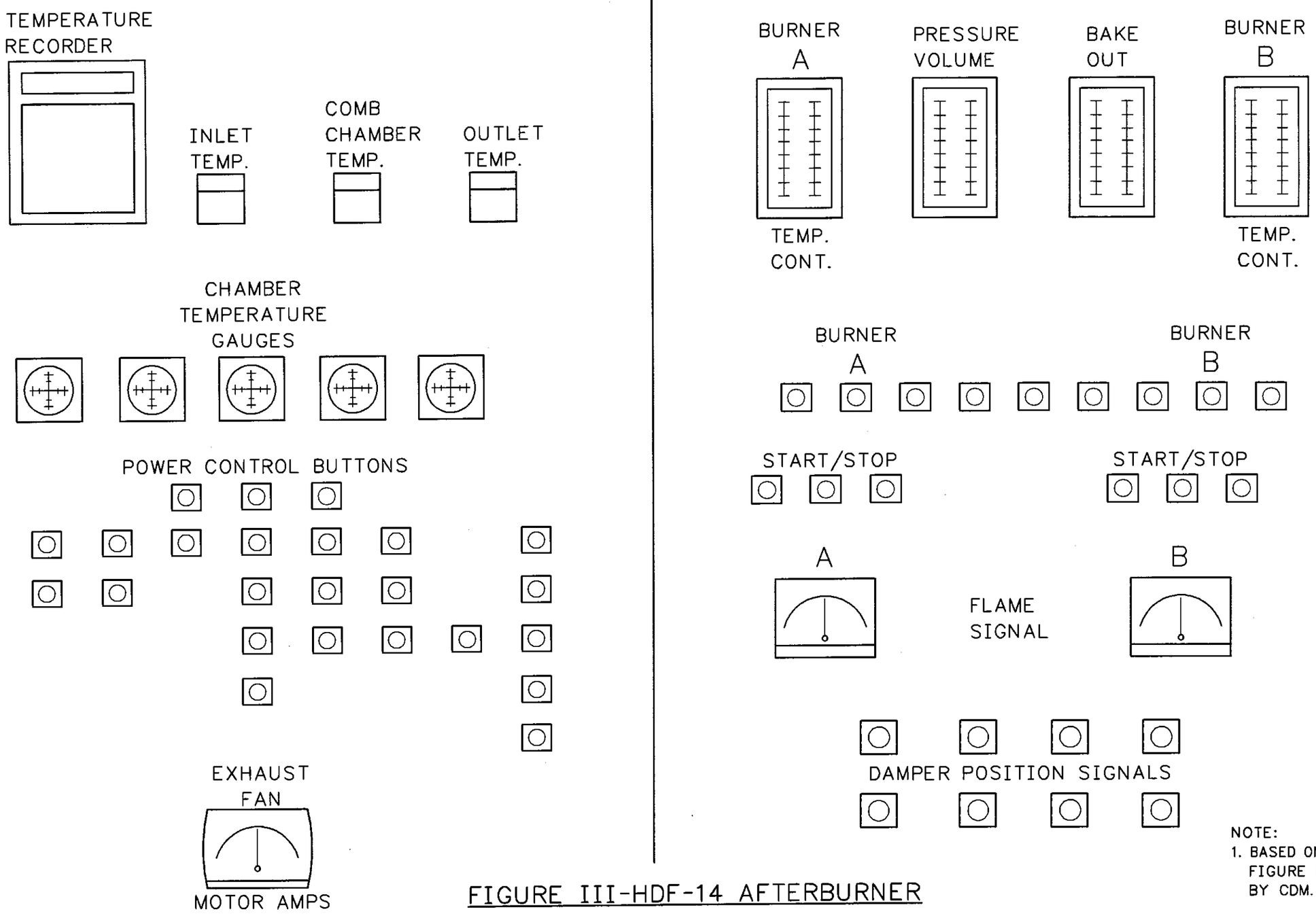

FIGURE III-HDF-14 AFTERBURNER CONTROL PANEL

NOTE:
1. BASED ON O&M FIGURE PRODUCED BY CDM.

FIGURE III-SD-HDF-14
AFTERBURNER
CONTROL PANEL

GREELEY AND HANSEN
ENGINEERS

FILE: SD-HDF14 1:1 03/01/99 14:31 GH-E

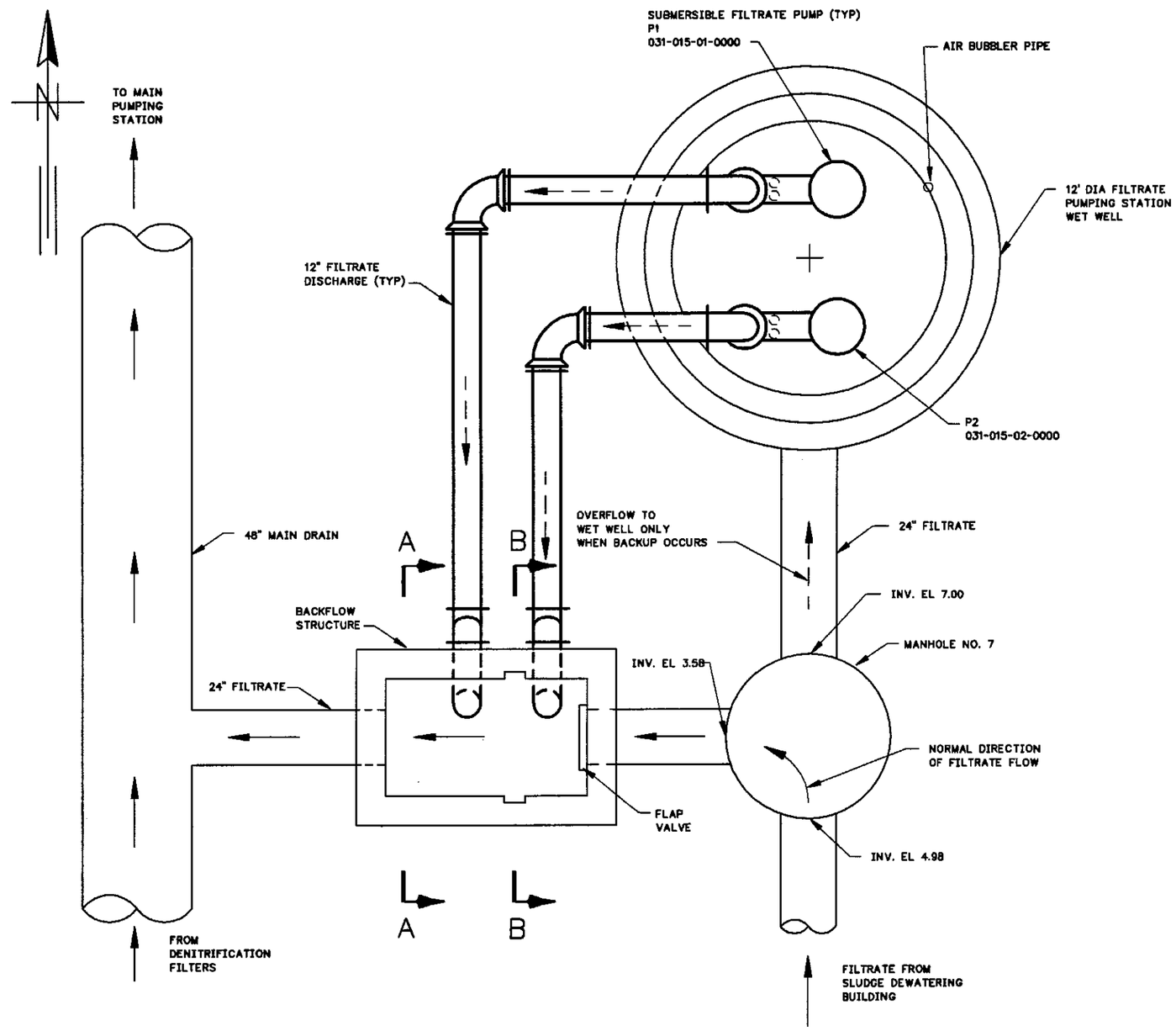

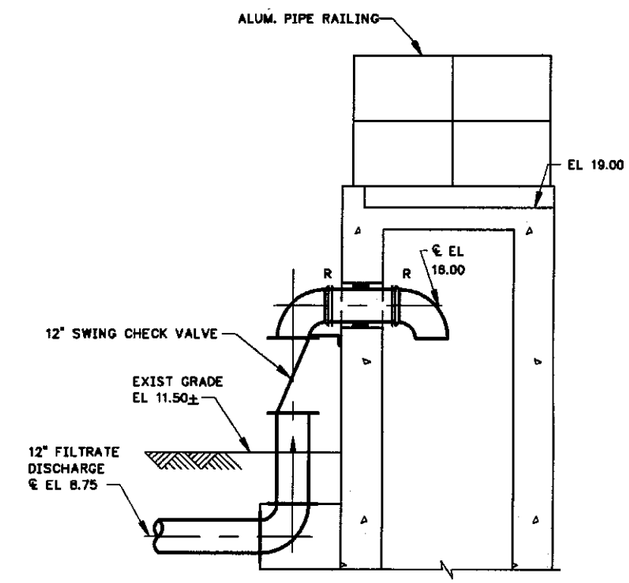

SECTION A

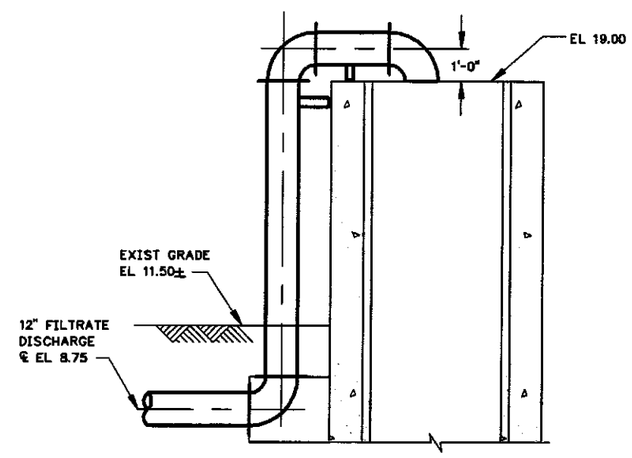

SECTION B

FIGURE III-SD-FPS-1
FILTRATE PUMPING STATION AND
BACKFLOW STRUCTURE FLOW DIAGRAM

GREELEY AND HANSEN
ENGINEERS

FILE: SD-FPS-1 1:1 03/01/99 14:35 GH-E

FIGURE III-SD-FPS-1
FILTRATE PUMPING STATION AND
BACKFLOW STRUCTURE FLOW DIAGRAM

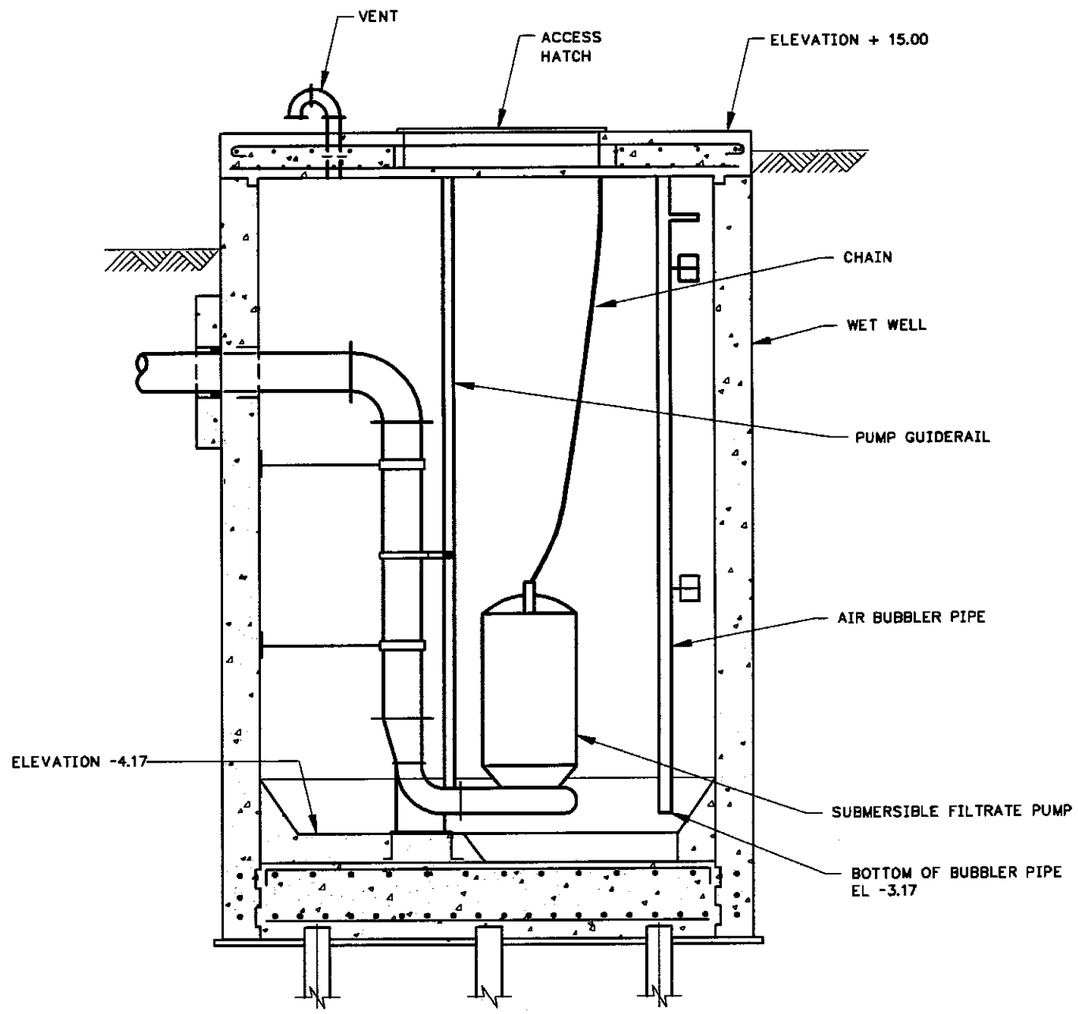

FILTRATE PUMPING STATION

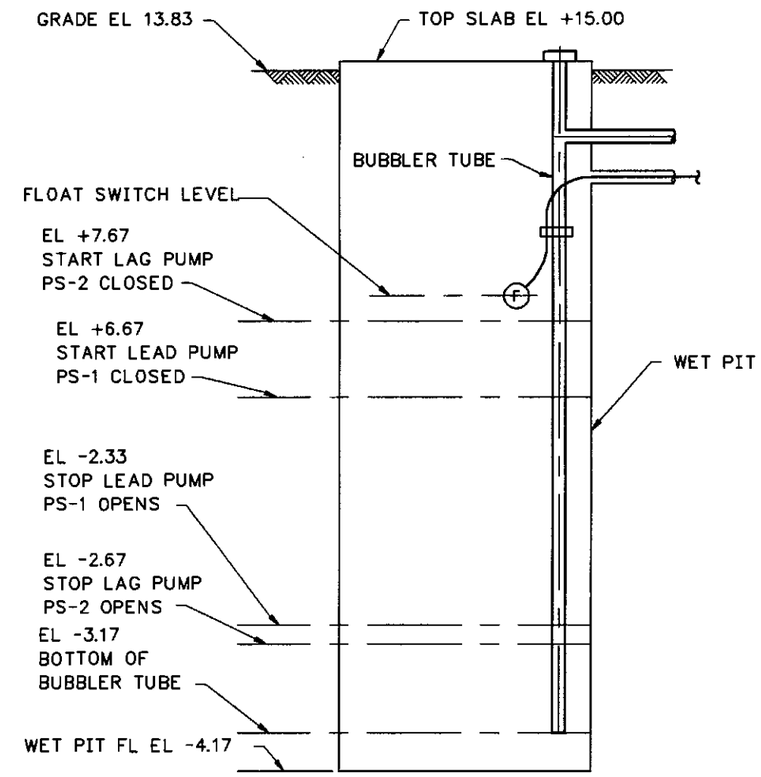

NOTE: PS-1 AND PS-2 ARE PRESSURE SWITCHES WHICH CONTROL THE OPERATION OF THE FILTRATE PUMPS THROUGH THE BUBBLER SYSTEM, AS SHOWN.

SET POINT ELEVATIONS

FIGURE III-SD-FPS-2 FILTRATE PUMPING STATION AND SET POINT ELEVATIONS

FILE: SD-FPS-2 1:1 03/01/99 14:50 GH-E

GREELEY AND HANSEN
ENGINEERS

FIGURE III-SD-FPS-2
FILTRATE PUMPING STATION AND
SET POINT ELEVATIONS

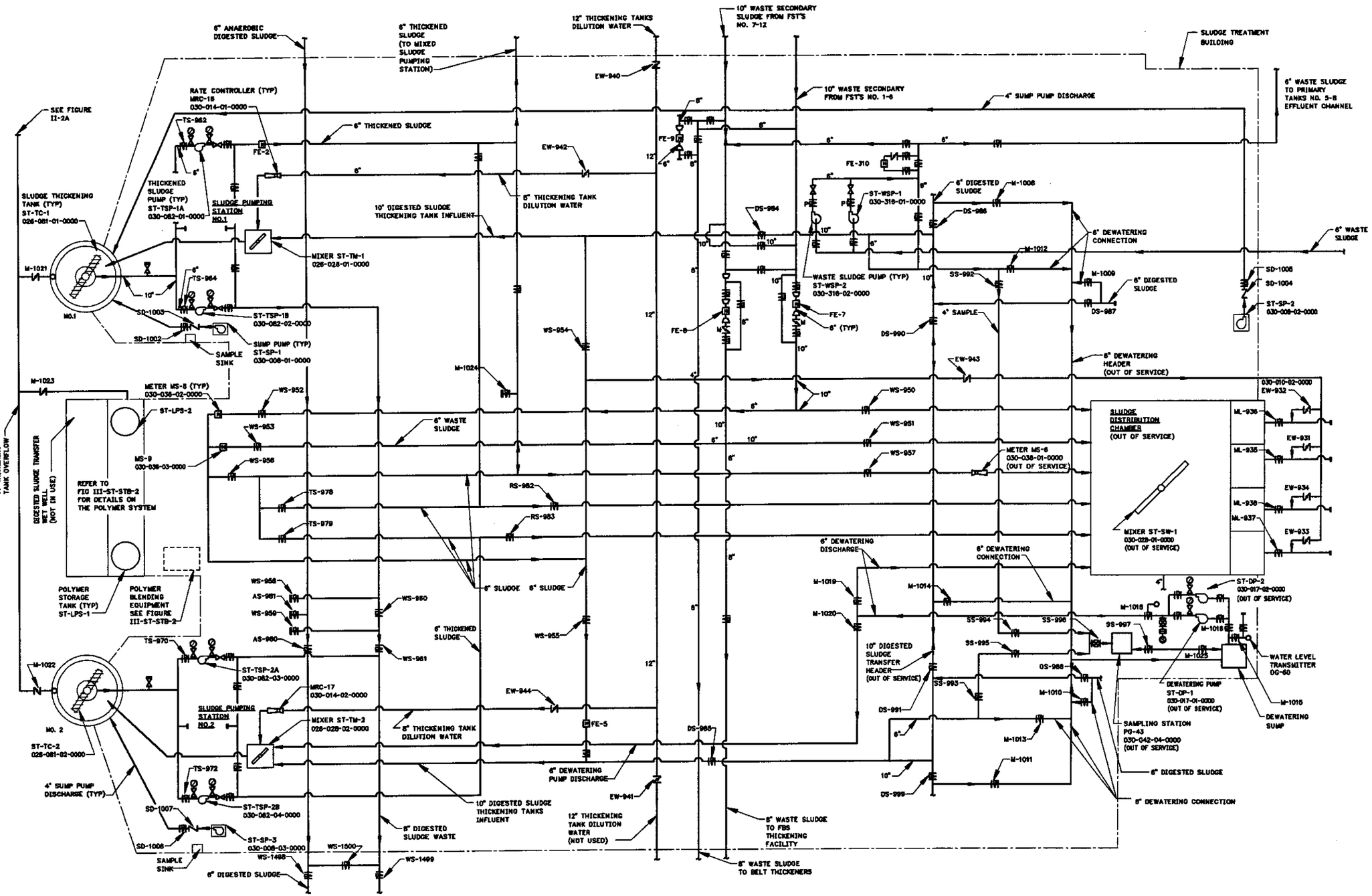

FIGURE III-ST-STB-1
SLUDGE TREATMENT FACILITIES SCHEMATIC

GREELEY AND HANSEN
ENGINEERS

FIGURE III-ST-STB-1
SLUDGE TREATMENT
FACILITIES SCHEMATIC

FILE: ST-STB-1 1:1 02/25/99 15:31 GH-E

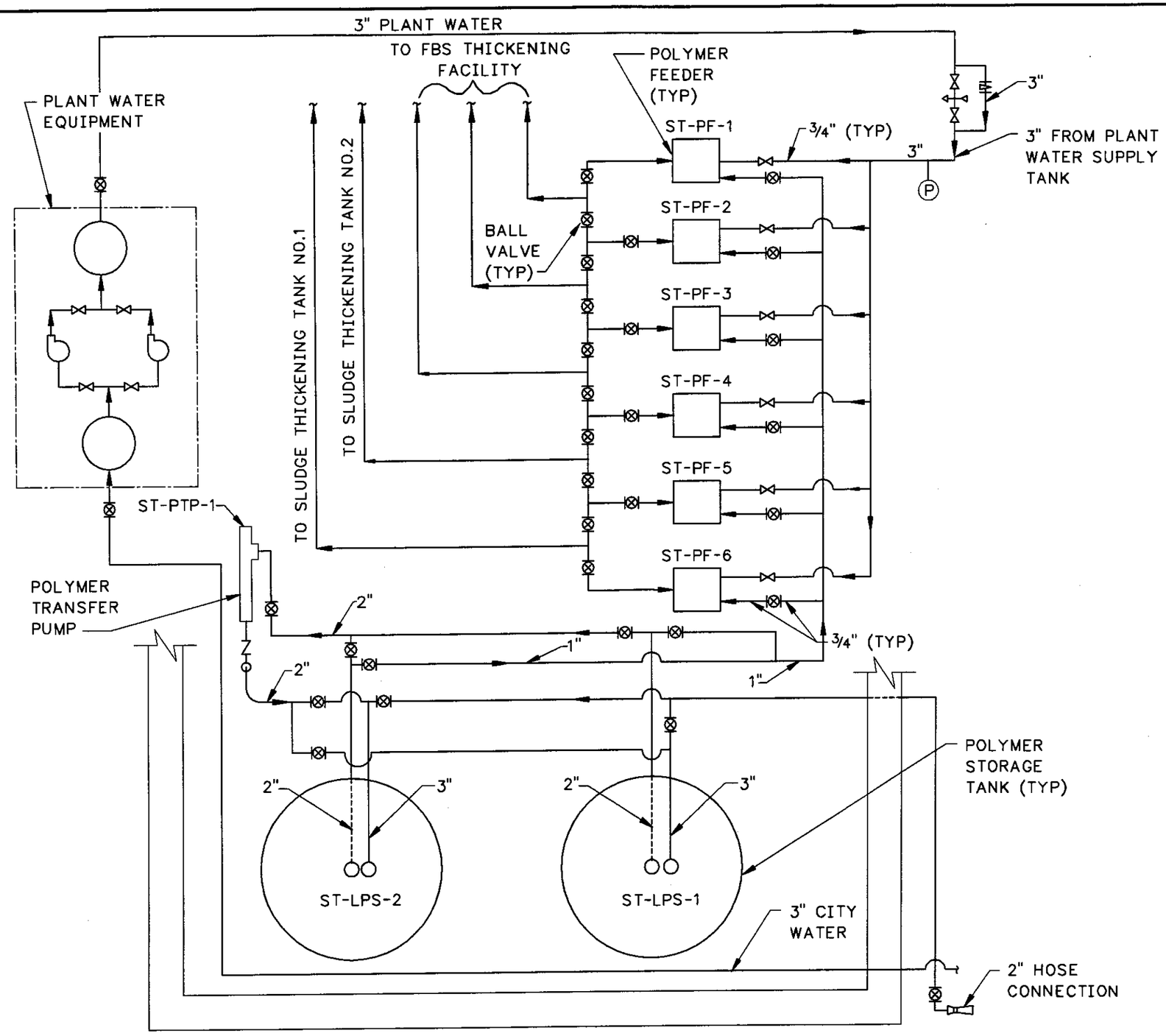

FIGURE III-ST-STB-2 SLUDGE POLYMER SYSTEM AND PLANT WATER DIAGRAM

GREELEY AND HANSEN ENGINEERS

FIGURE III-ST-STB-2
SLUDGE POLYMER SYSTEM
AND PLANT WATER DIAGRAM

FILE: ST-STB-2 1:1 02/25/99 15:59 GH-E

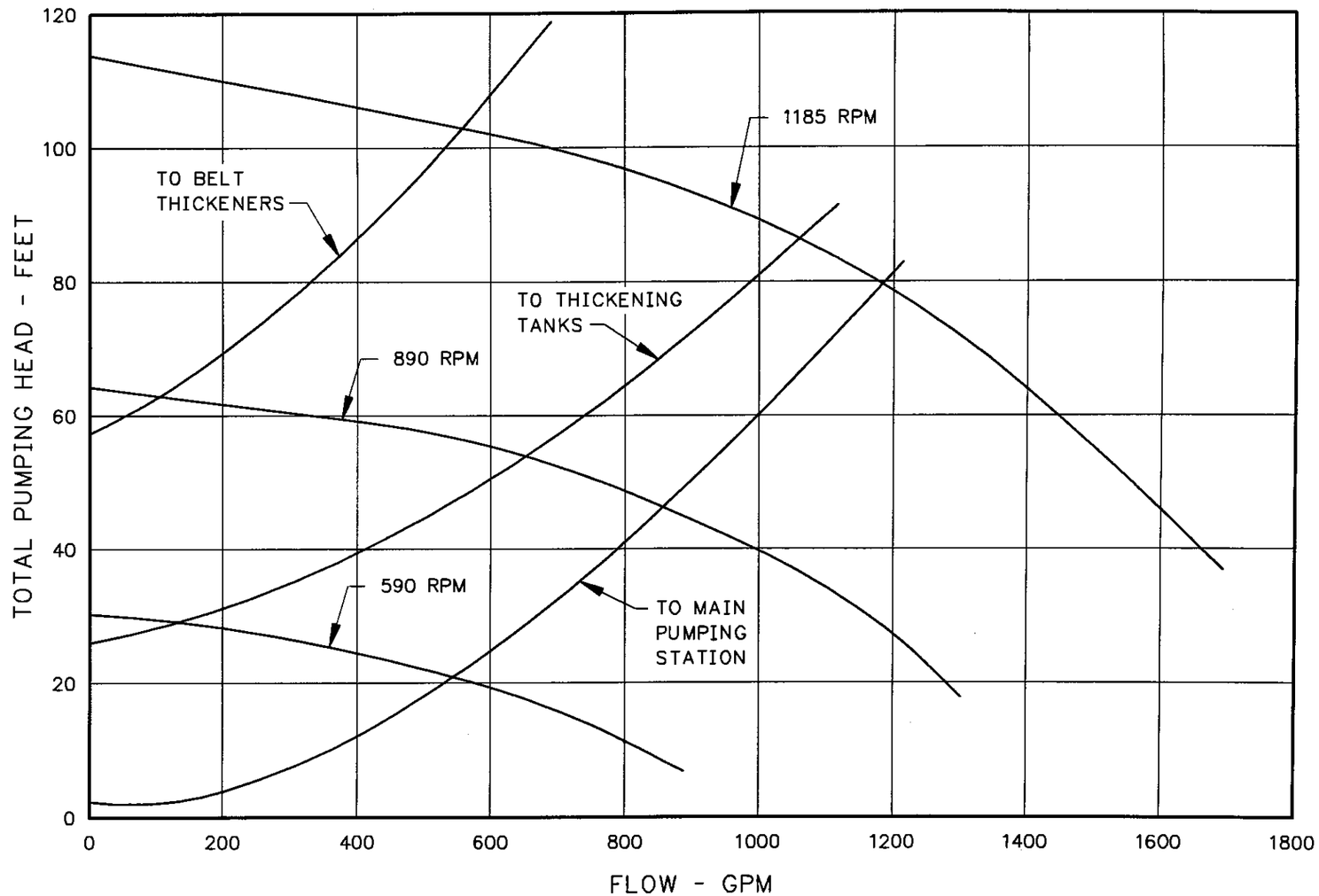

NOTE: THESE CURVES AT C=100 SHOW SELECTED CONDITIONS WHICH CAN VARY DEPENDING ON THE RETURN SLUDGE FLOW RATE, THE CARBONACEOUS WAS FLOW RATE, AND THE SELECTED DISCHARGE LOCATION.

FIGURE III-ST-STB-3 WASTE ACTIVATED SLUDGE PUMPS

FILE: ST-STB-3 1:1 02/25/99 16:03 GH-E

GREELEY AND HANSEN ENGINEERS

FIGURE III-ST-STB-3
WASTE ACTIVATED
SLUDGE PUMPS

LEGEND

FE-FLOWMETER
FIT-TRANSMITTER
FIC-FLOW CONTROLLER
FI-FLOW INDICATPR
FR-FLOW RECORDER

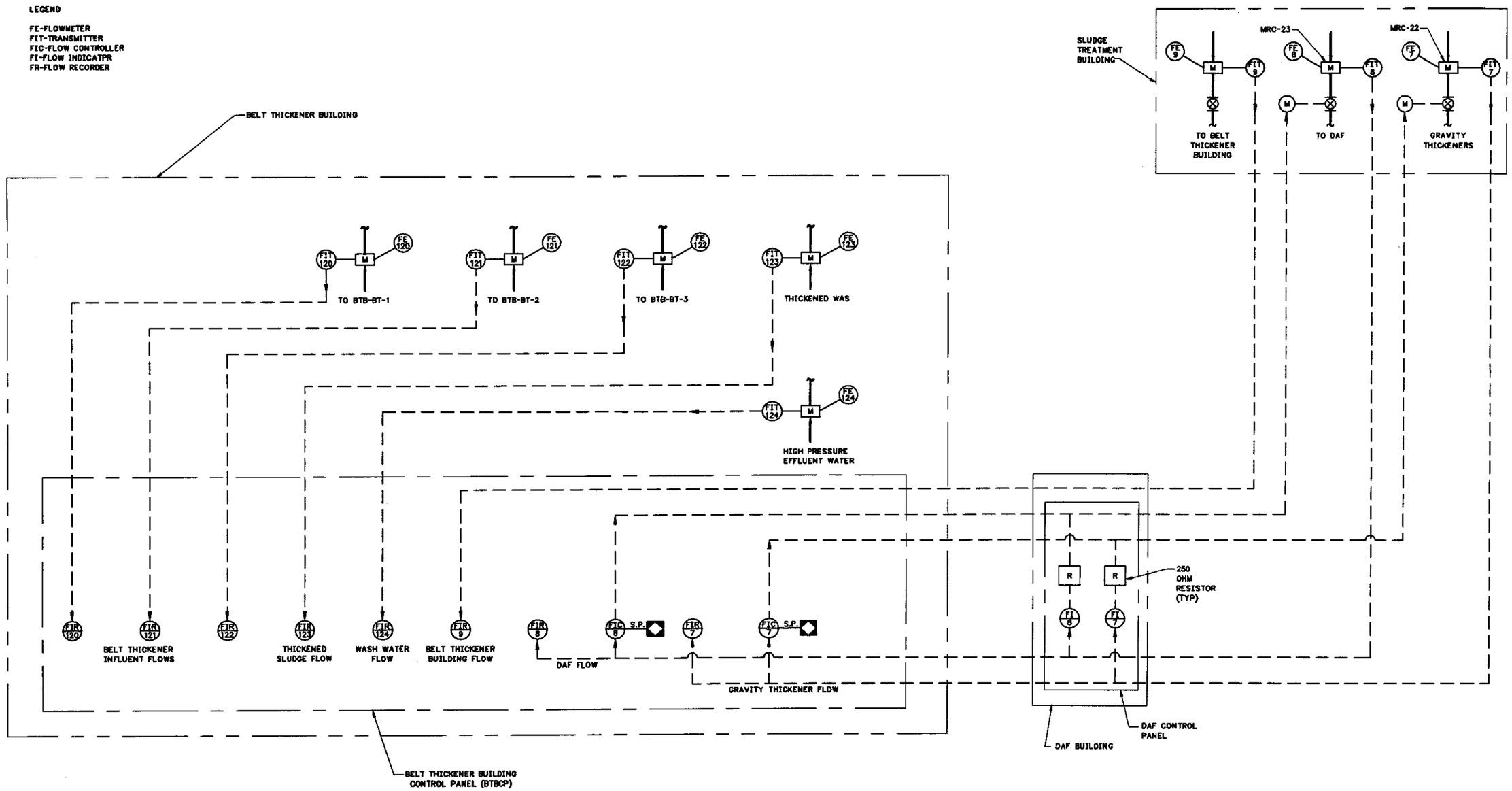

FIGURE III-ST-STB-4 SLUDGE THICKENER BUILDING METERING AND CONTROL DIAGRAM

FILE: ST-STB-4 1:1 02/25/99 16:17 GH-E

GREELEY AND HANSEN ENGINEERS

FIGURE III-ST-STB-4
SLUDGE THICKENER BUILDING
METERING AND CONTROL DIAGRAM

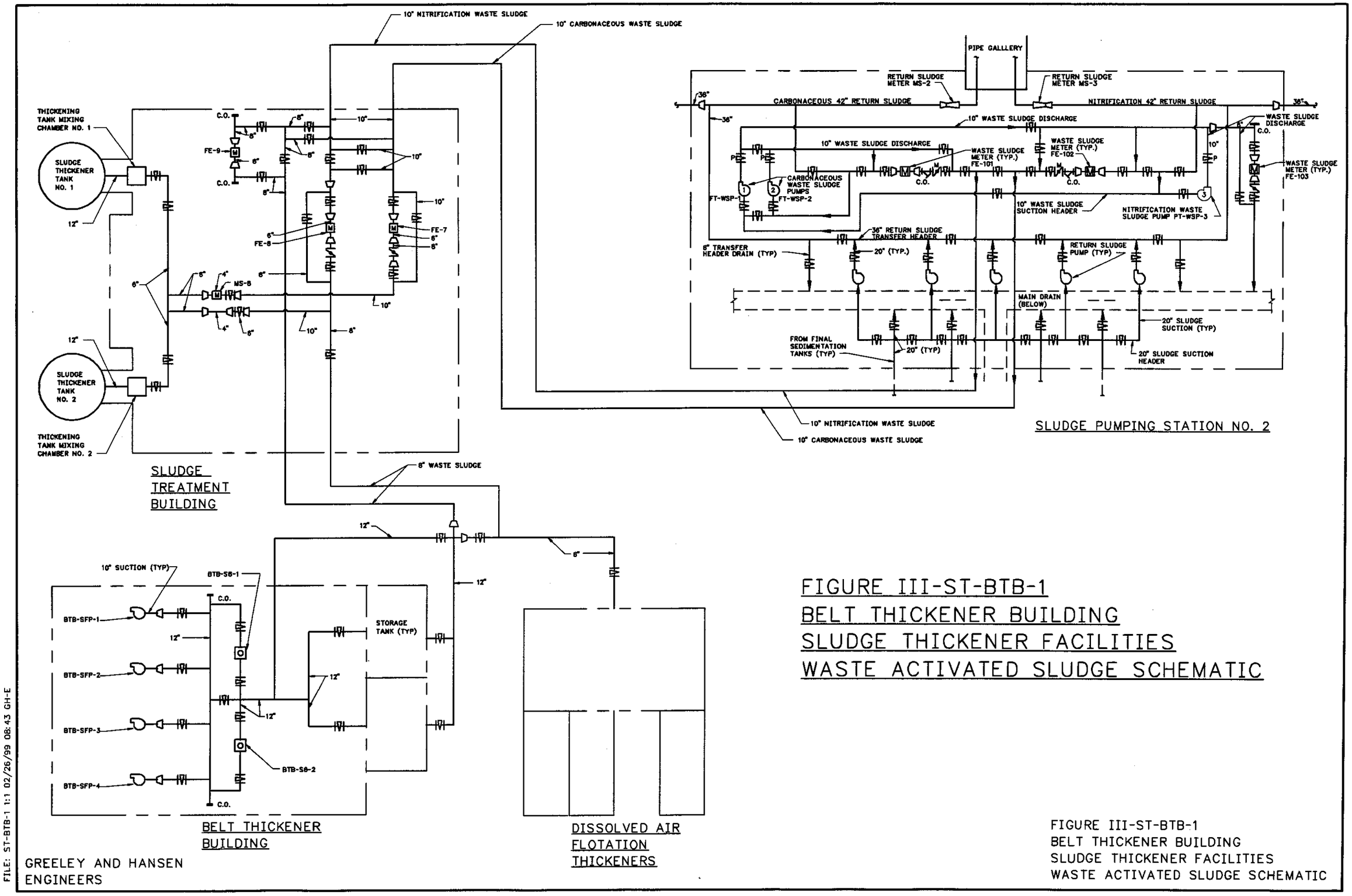

FIGURE III-ST-BTB-1
BELT THICKENER BUILDING
SLUDGE THICKENER FACILITIES
WASTE ACTIVATED SLUDGE SCHEMATIC

GREELEY AND HANSEN ENGINEERS

FILE: ST-BTB-1 1:1 02/26/99 08:43 GH-E

FIGURE III-ST-BTB-1
BELT THICKENER BUILDING
SLUDGE THICKENER FACILITIES
WASTE ACTIVATED SLUDGE SCHEMATIC

LEGEND

FE= FLOWMETER
FIT= TRANSMITTER
FIC= FLOW CONTROLLER
FI= FLOW INDICATOR
FR= FLOW RECORDER

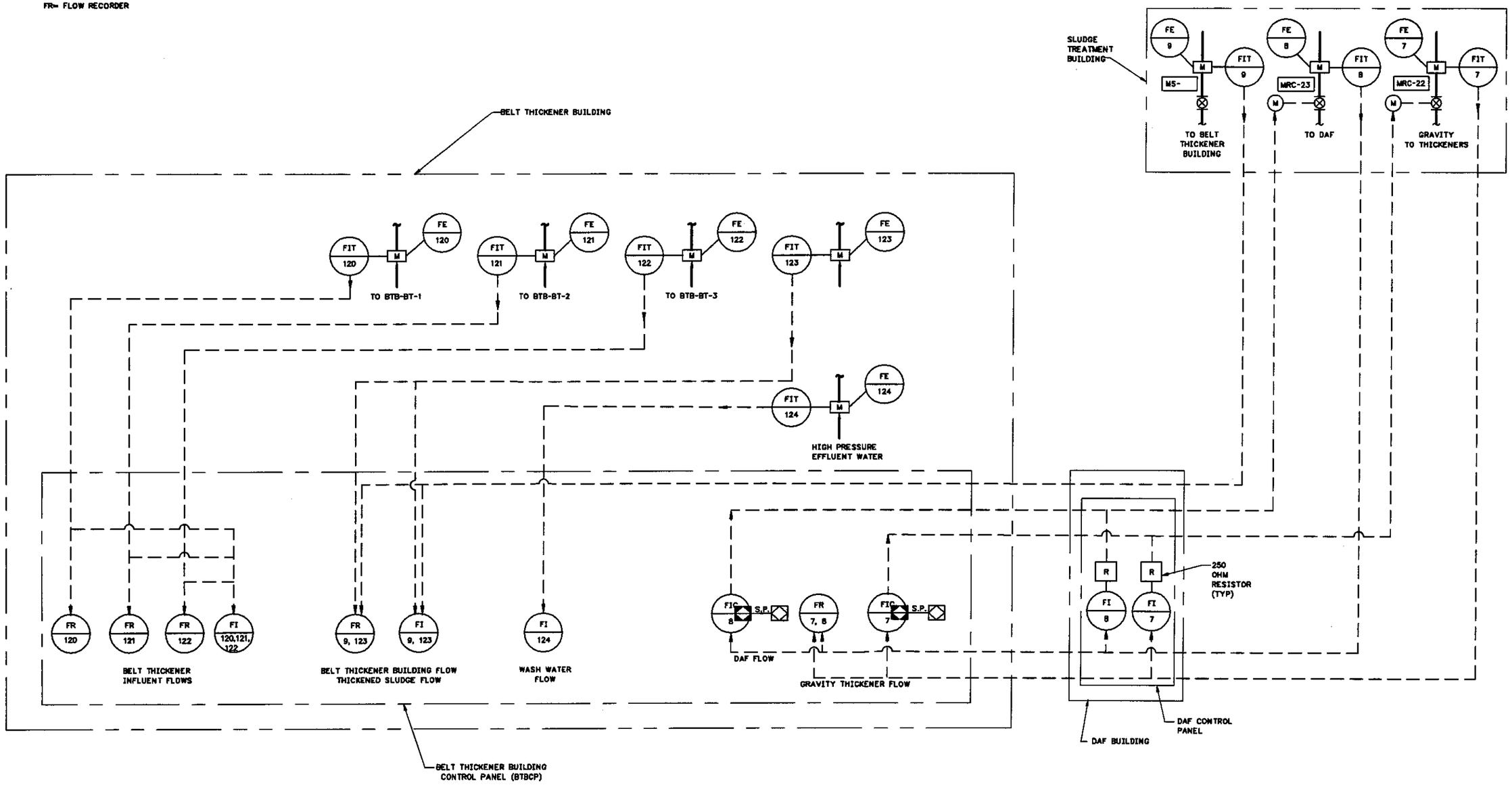

FIGURE III-ST-BTB-2 BELT THICKENER BUILDING SLUDGE THICKENING FACILITIES METERING AND CONTROL DIAGRAM

GREELEY AND HANSEN
ENGINEERS

FIGURE III-ST-BTB-2
BELT THICKENER BUILDING
SLUDGE THICKENING FACILITIES
METERING AND CONTROL DIAGRAM

FILE: ST-BTB-2 1:1 02/26/99 08:53 GH-E

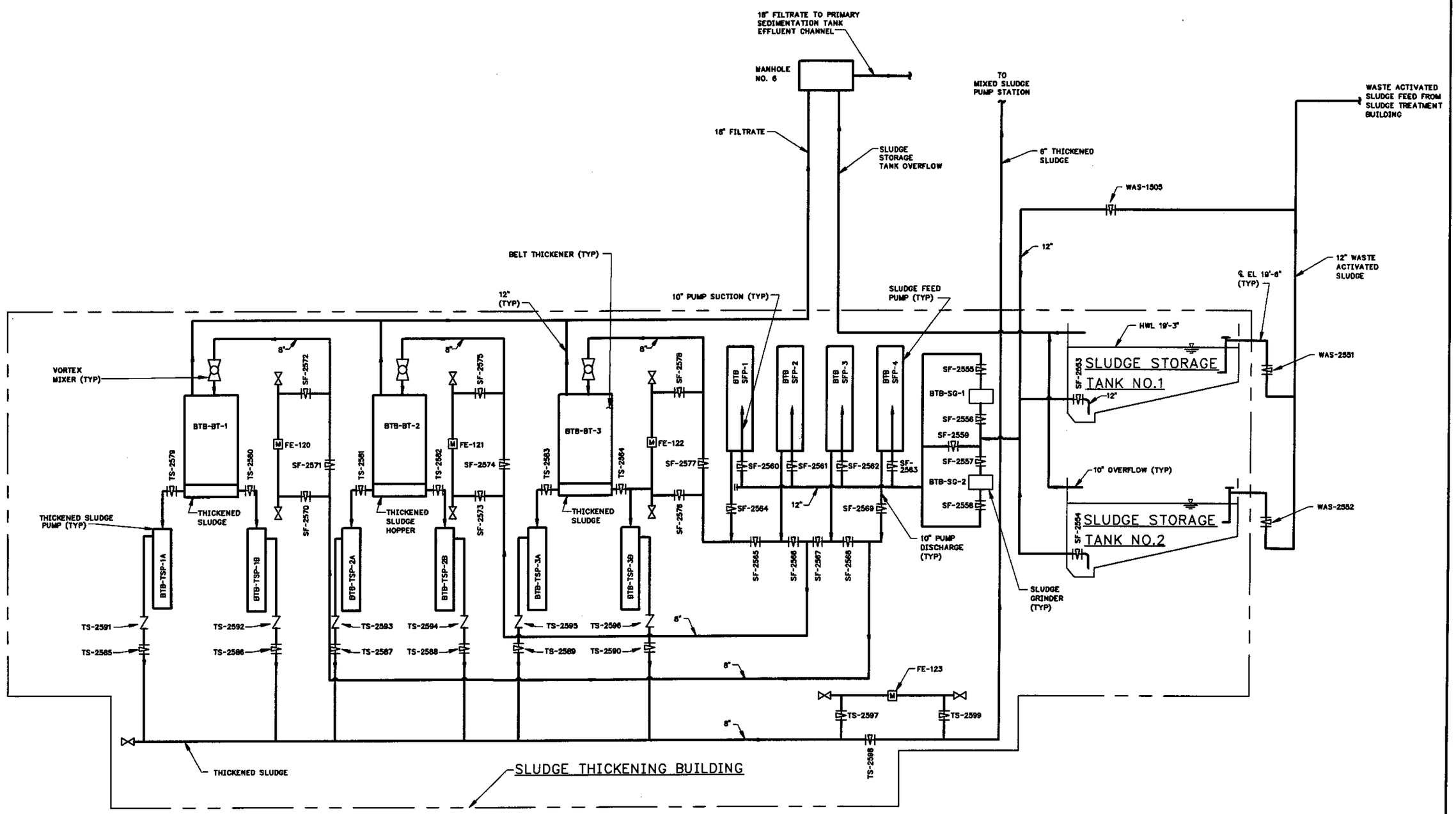

FIGURE III-ST-BTB-3 BELT THICKENER BUILDING
WAS FEED AND THICKENED SLUDGE DISCHARGE DIAGRAM

GREELEY AND HANSEN
ENGINEERS

FIGURE III-ST-BTB-3
BELT THICKENER BUILDING
WAS FEED AND THICKENED
SLUDGE DISCHARGE DIAGRAM

FILE: ST-BTB-3 1:1 02/26/99 08:59 GH-E

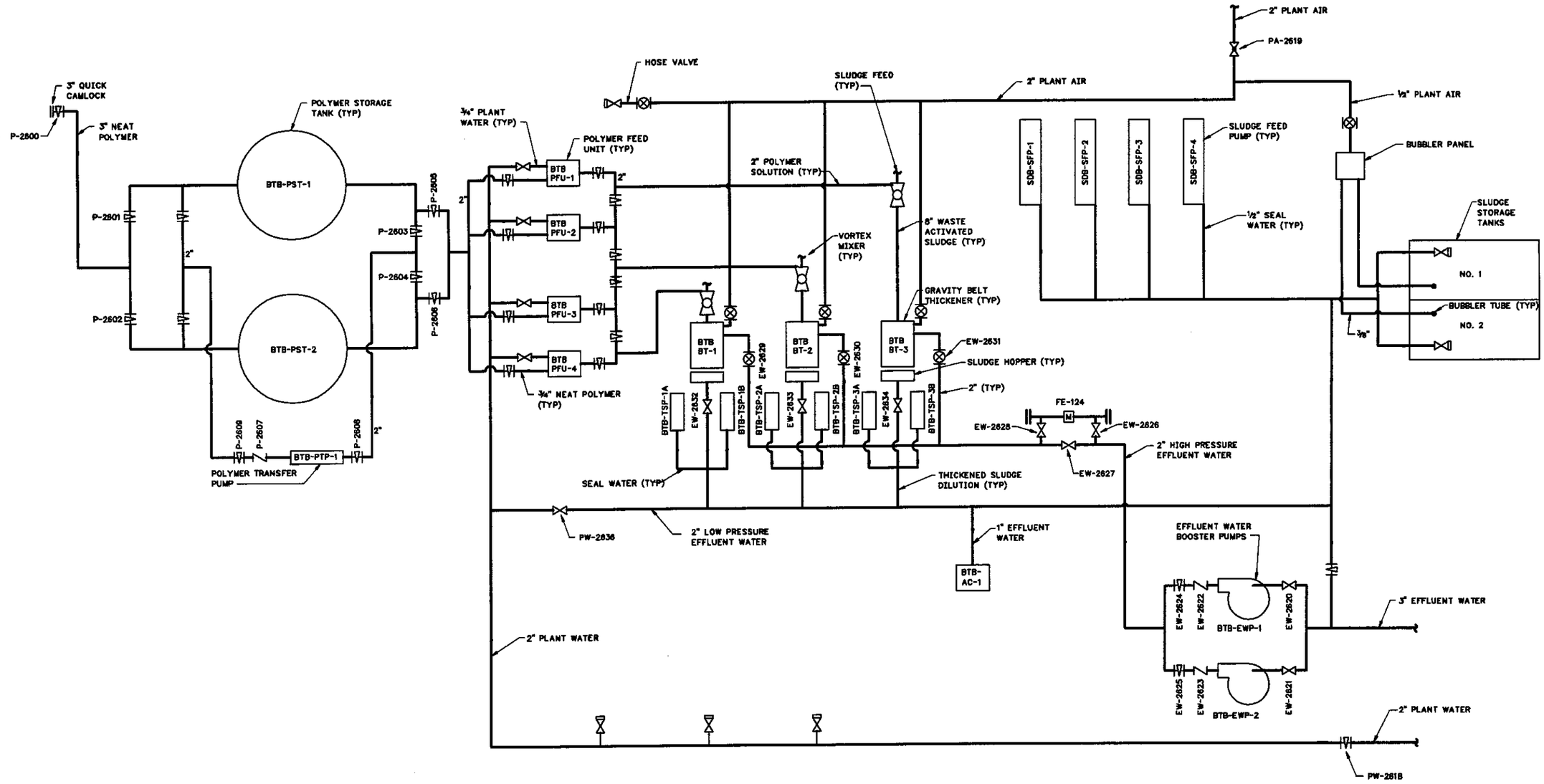

FIGURE III-ST-BTB-4 BELT THICKENER BUIDING
POLYMER FEED, EFFLUENT WATER PLANT AIR AND PLANT WATER DIAGRAM

FILE: ST-BTB-4 1:1 02/26/99 09:11 GH-E

GREELEY AND HANSEN
ENGINEERS

FIGURE III-ST-BTB-4
BELT THICKENER BUILDING
POLYMER FEED, EFFLUENT WATER,
PLANT AIR AND PLANT WATER DIAGRAM

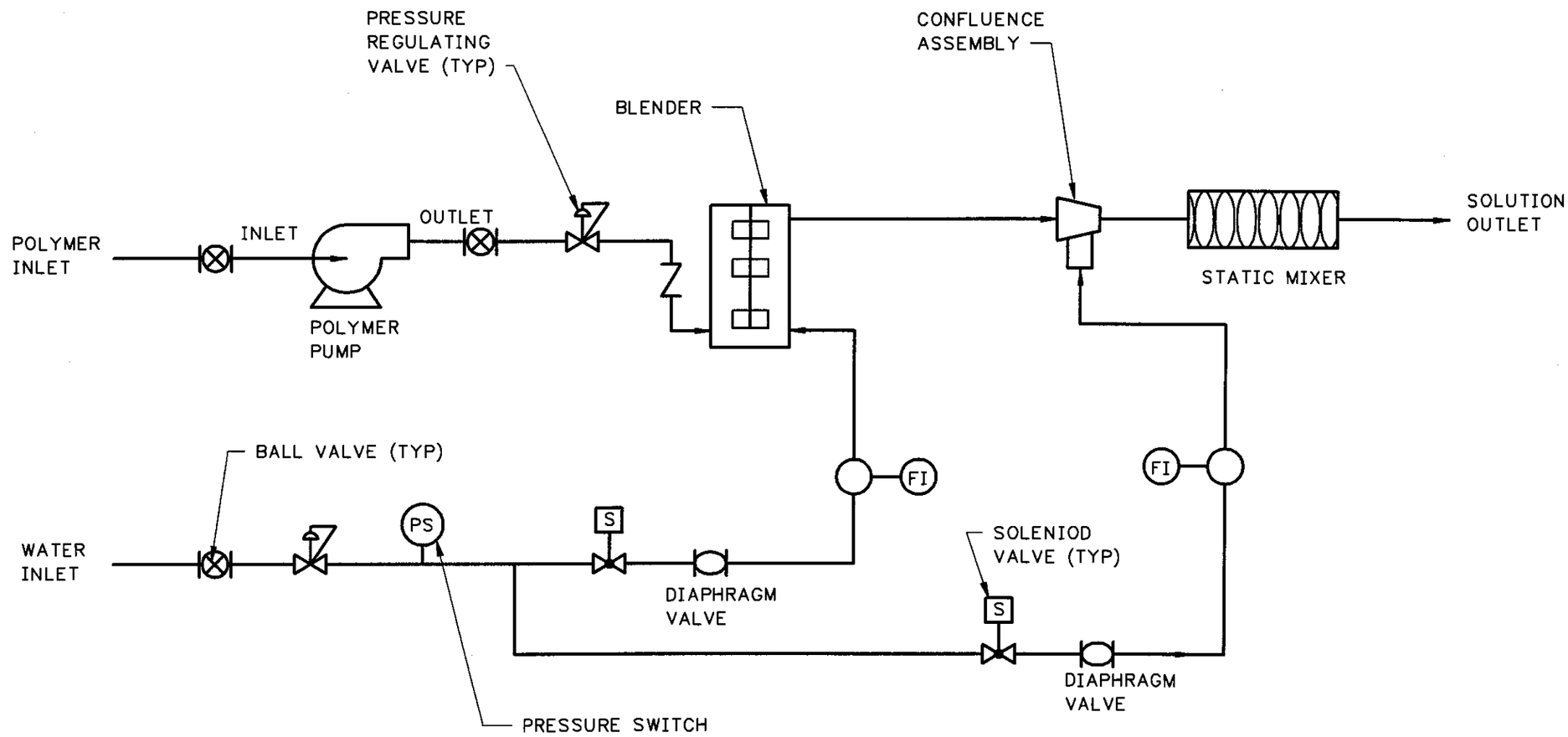

FIGURE III-ST-BTB-5 BELT THICKNER BUILDING
POLYMER FEED UNIT CONTROL PANEL AND OPERATIONAL SCHEMATIC

FILE: ST-BTB-5 1:1 02/26/99 09:16 GH-E

GREELEY AND HANSEN
ENGINEERS

FIGURE III-ST-BTB-5
BELT THICKENER BUILDING
POLYMER FEED UNIT CONTROL
PANEL AND OPERATIONAL SCHEMATIC

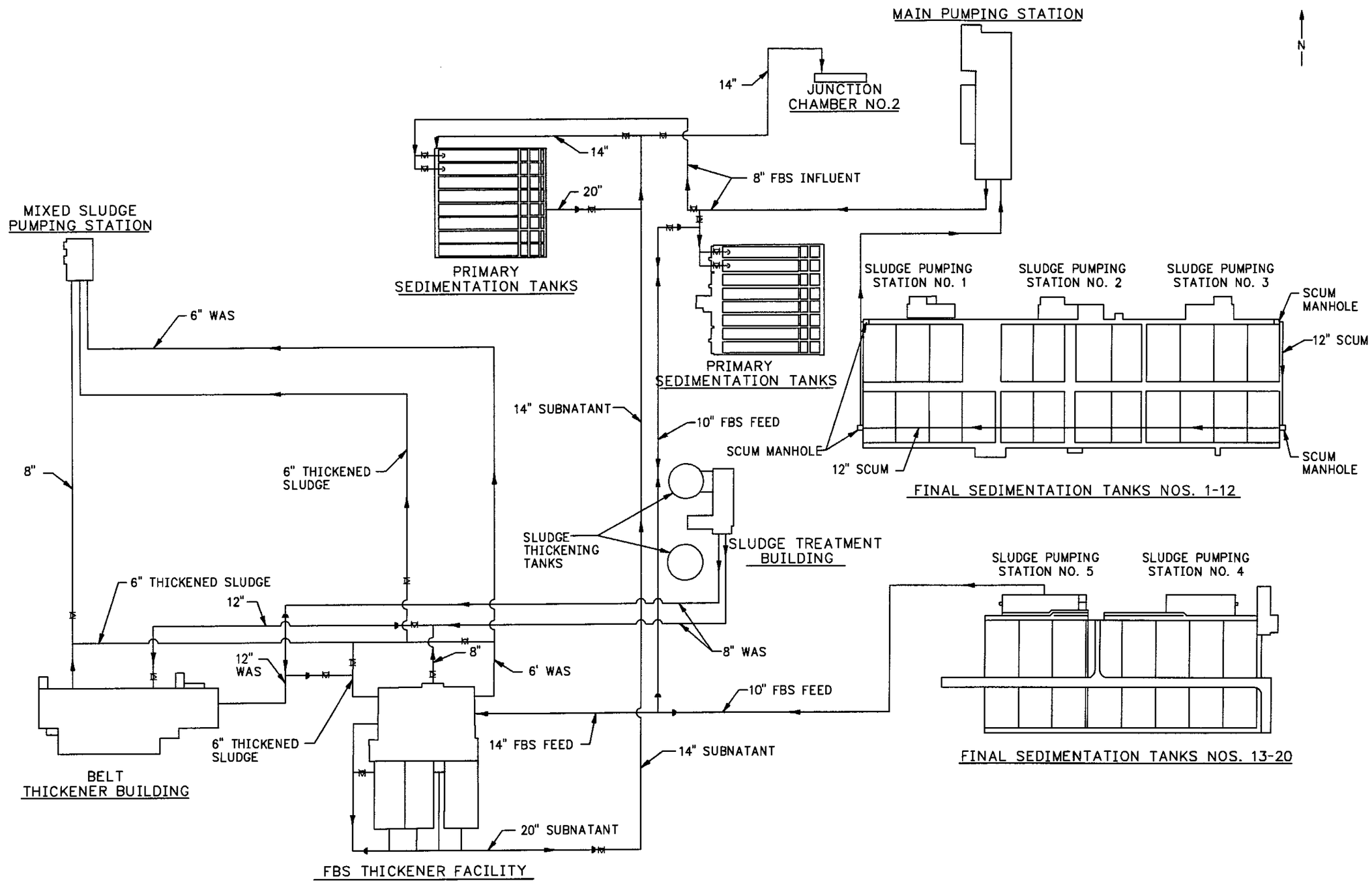

FIGURE III-ST-FBS-1 SCHEMATIC DIAGRAM OF OUTSIDE PIPING

GREELEY AND HANSEN ENGINEERS
FALLER, DAVIS & ASSOCIATES

FIGURE III-ST-FBS-1
SCHEMATIC DIAGRAM
OF OUTSIDE PIPING

FILE: ST-FBS-1 1:1 02/26/99 09:20 GH-E

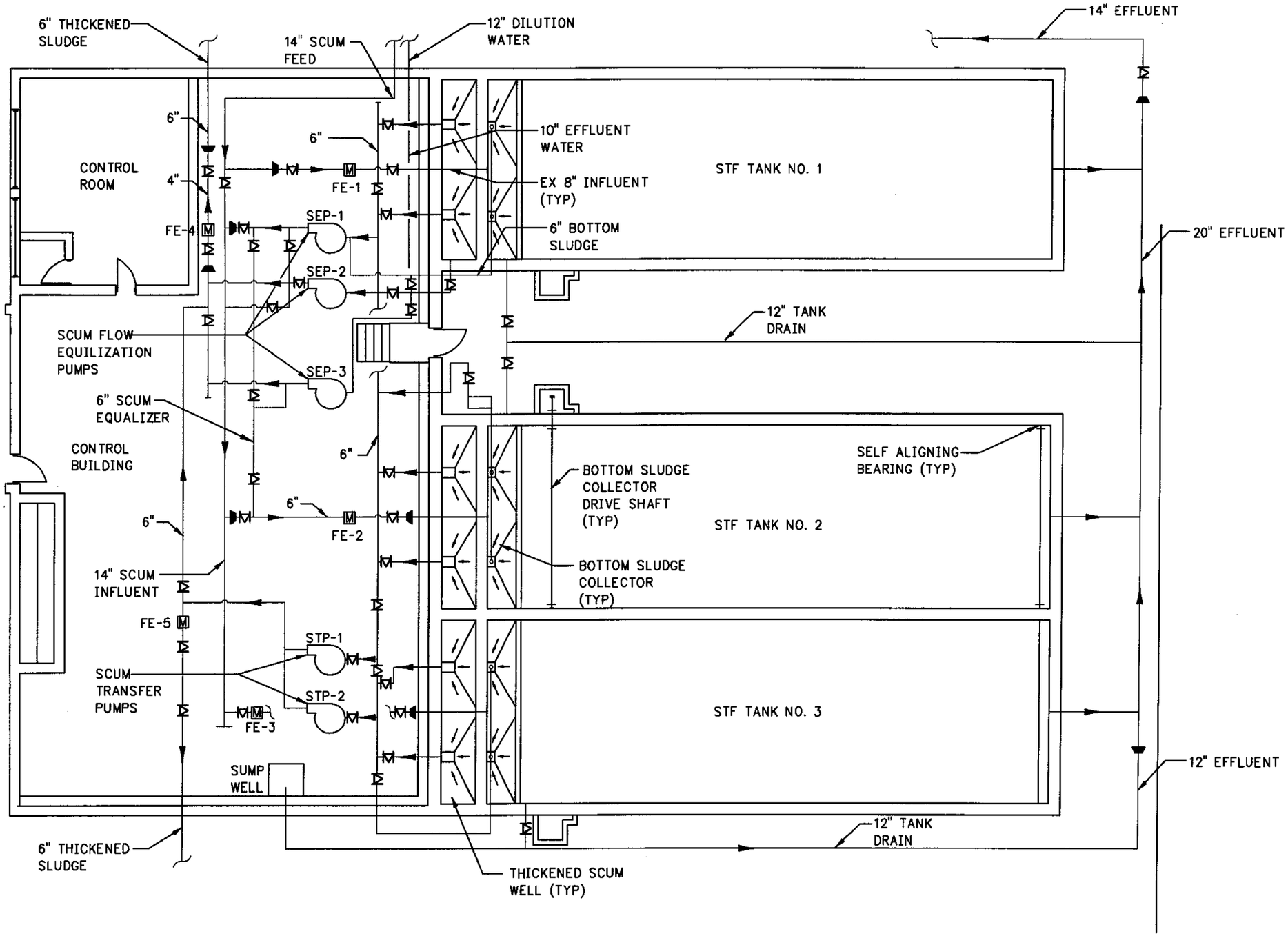

FIGURE III-ST-FBS-2 FBS THICKENER FACILITY

GREELEY AND HANSEN ENGINEERS
FALLER, DAVIS & ASSOCIATES

FIGURE III-ST-FBS-2
FBS THICKENER
FACILITY

FILE: ST-FBS-2 1:1 02/26/99 09:21 GH-E